FRONT BUMPER (for Sedan)

COMPONENTS

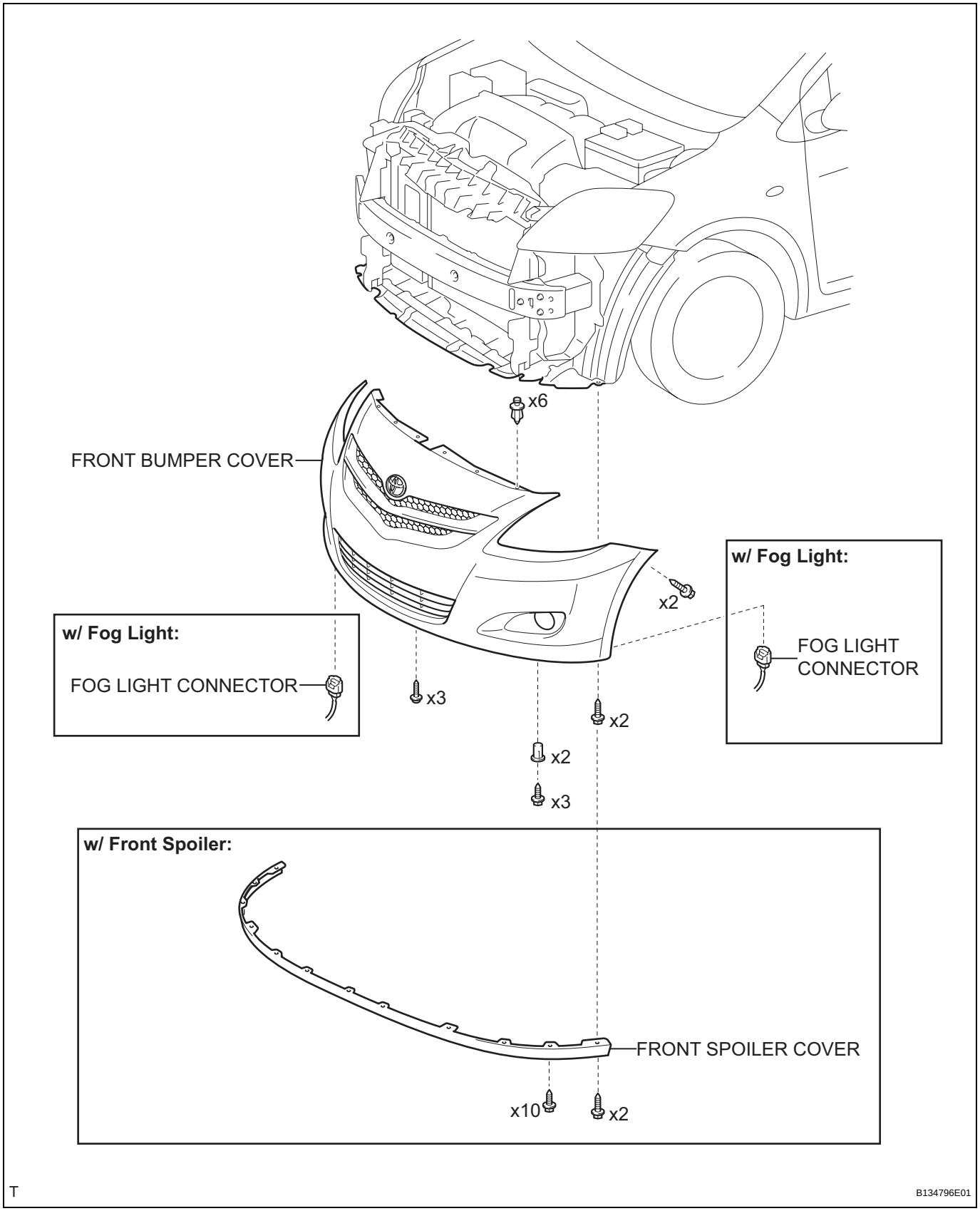

ET

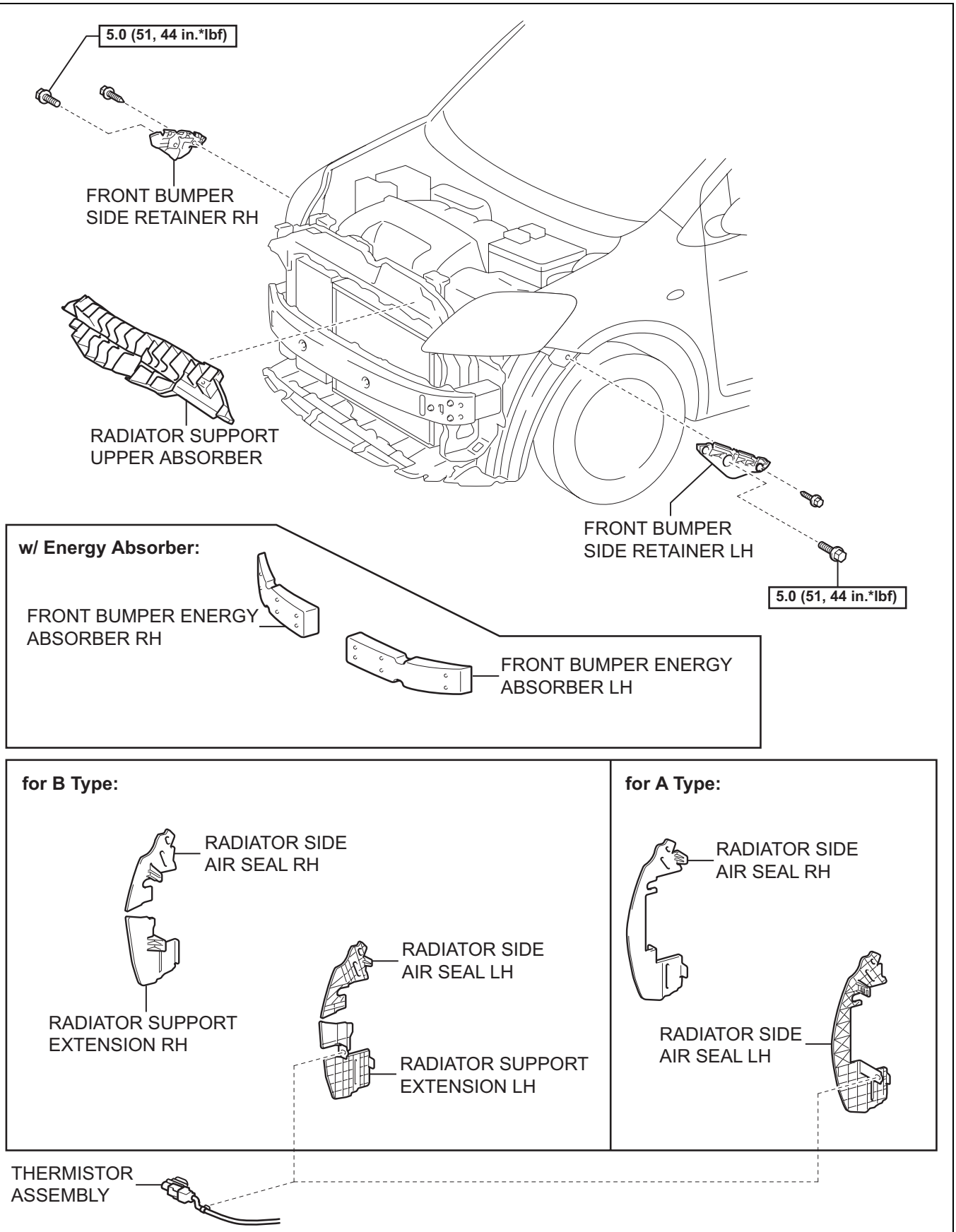

N*m (kgf*cm, ft*lbf) : Specified torque

T

B138540E01

ET

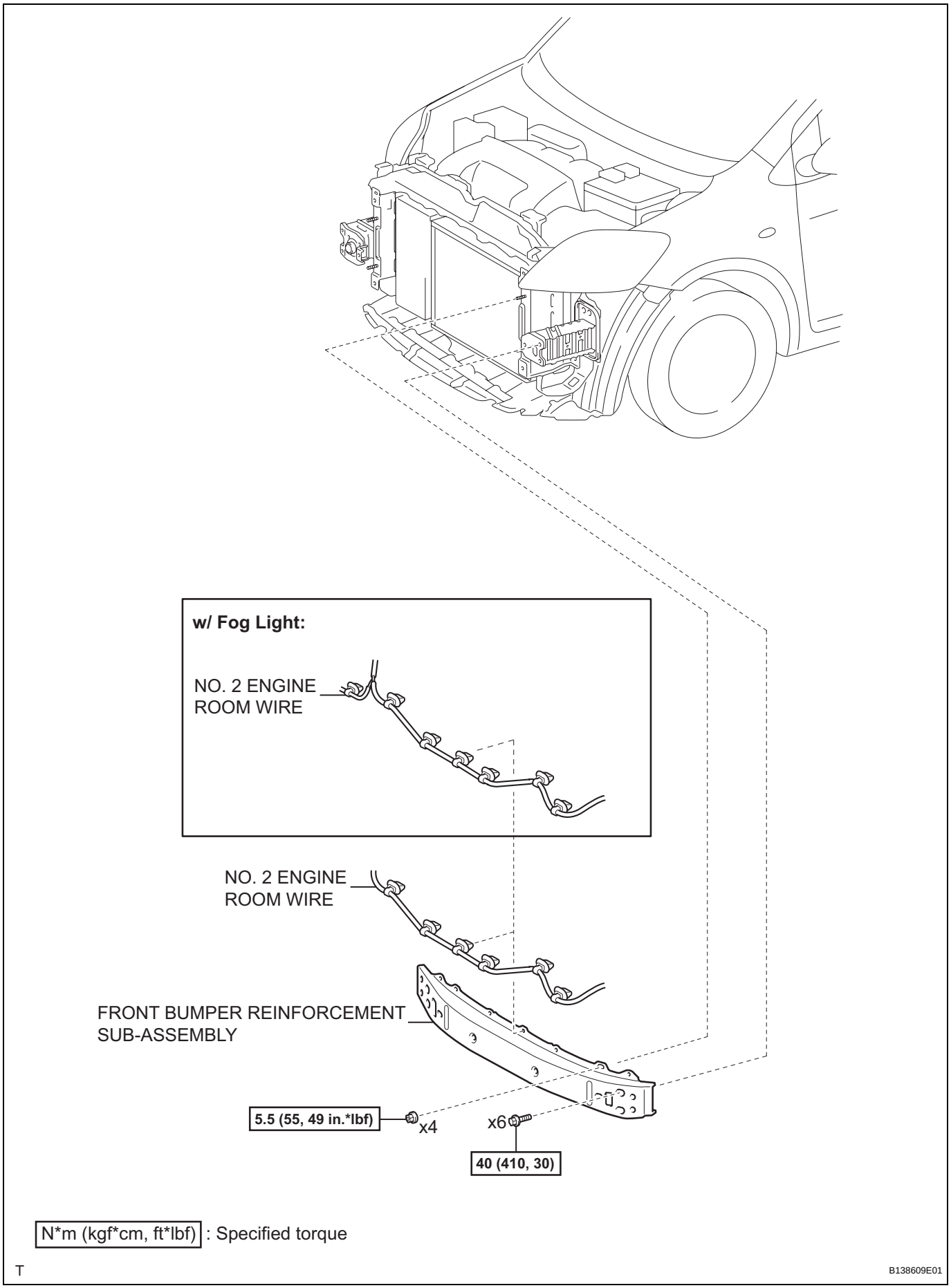
w/ Fog Light:
NO. 2 ENGINE ROOM WIRE
NO. 2 ENGINE ROOM WIRE
FRONT BUMPER REINFORCEMENT SUB-ASSEMBLY
5.5 (55, 49 in.*lbf)
x4
x6
40 (410, 30)
N*m (kgf*cm, ft*lbf) : Specified torque
T
B138609E01

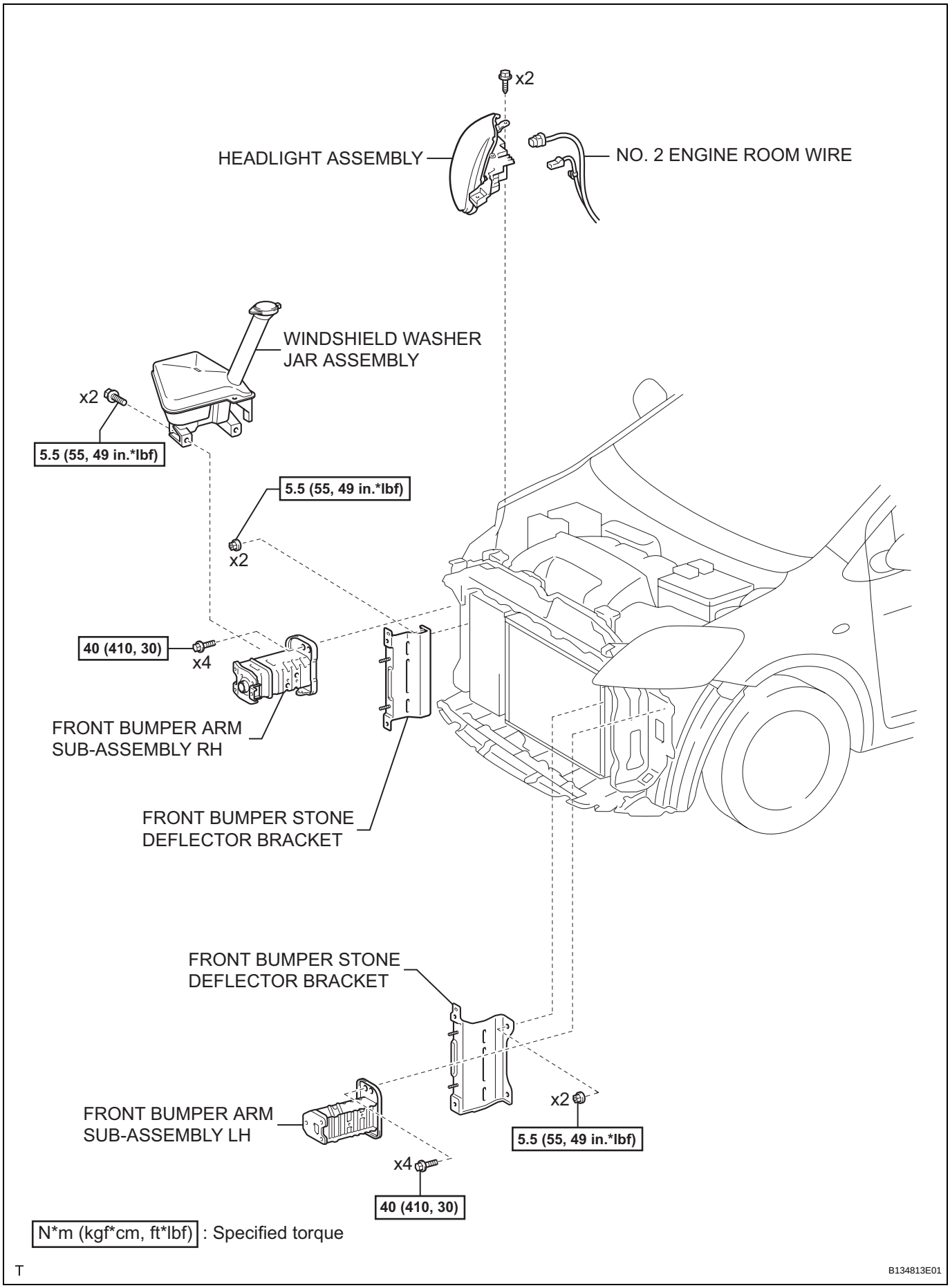
x2
HEADLIGHT ASSEMBLY
NO. 2 ENGINE ROOM WIRE
WINDSHIELD WASHER
JAR ASSEMBLY
x2
5.5 (55, 49 in.*lbf)
5.5 (55, 49 in.*lbf)
x2
40 (410, 30)
x4
FRONT BUMPER ARM
SUB-ASSEMBLY RH
FRONT BUMPER STONE
DEFLECTOR BRACKET
FRONT BUMPER STONE
DEFLECTOR BRACKET
FRONT BUMPER ARM
SUB-ASSEMBLY LH
x2
5.5 (55, 49 in.*lbf)
x4
40 (410, 30)
N*m (kgf*cm, ft*lbf) : Specified torque
T
B134813E01

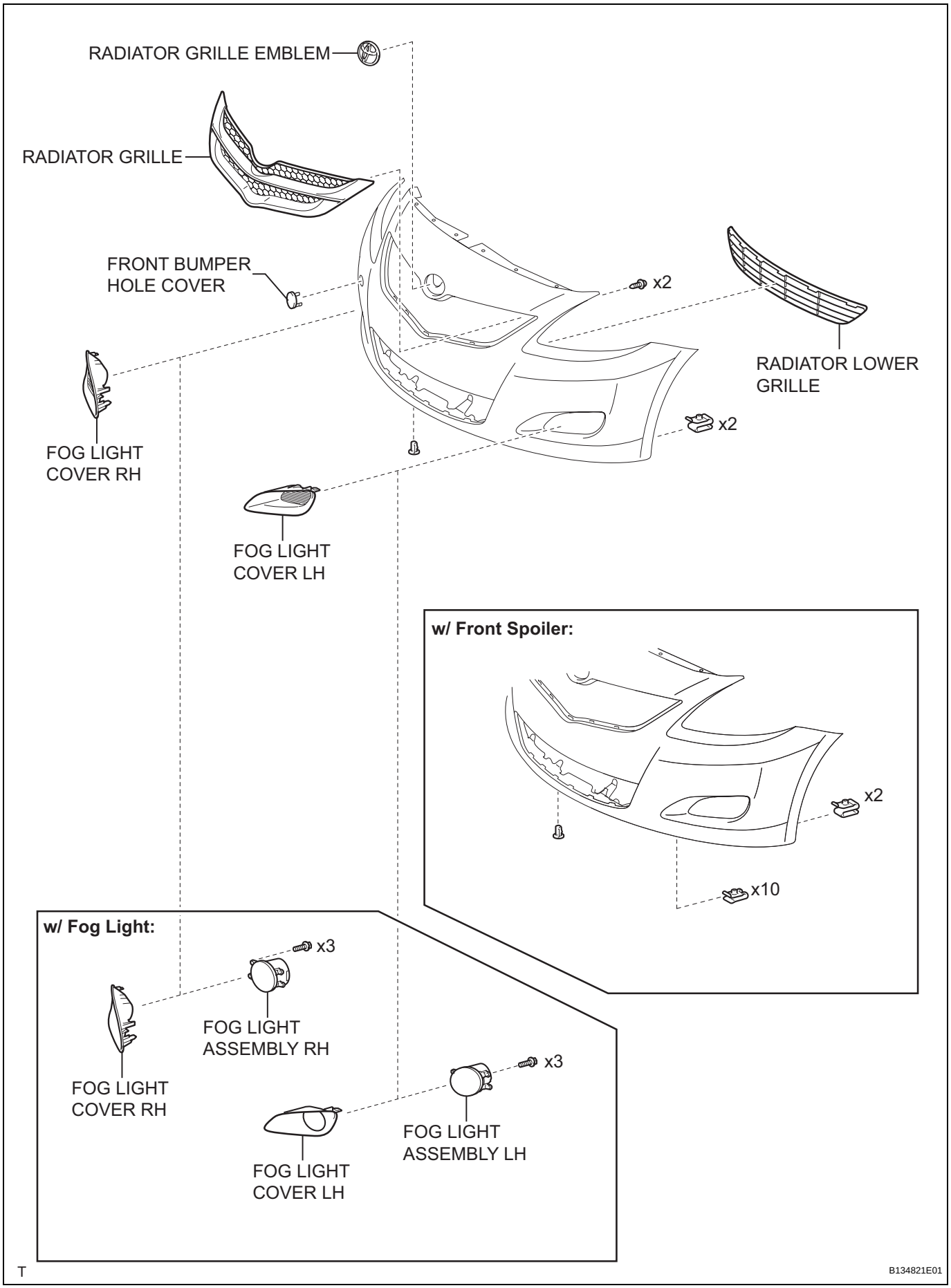
RADIATOR GRILLE EMBLEM
RADIATOR GRILLE
FRONT BUMPER HOLE COVER
x2
RADIATOR LOWER GRILLE
FOG LIGHT COVER RH
x2
FOG LIGHT COVER LH
w/ Front Spoiler:
x2
x10
w/ Fog Light:
x3
FOG LIGHT ASSEMBLY RH
FOG LIGHT COVER RH
x3
FOG LIGHT ASSEMBLY LH
FOG LIGHT COVER LH
T
B134821E01

REMOVAL

1. DISCONNECT CABLE FROM NEGATIVE BATTERY TERMINAL

2. REMOVE FRONT SPOILER COVER (w/ Front Spoiler)

(a) Remove the 2 screws, the 10 bolts and the front spoiler cover.

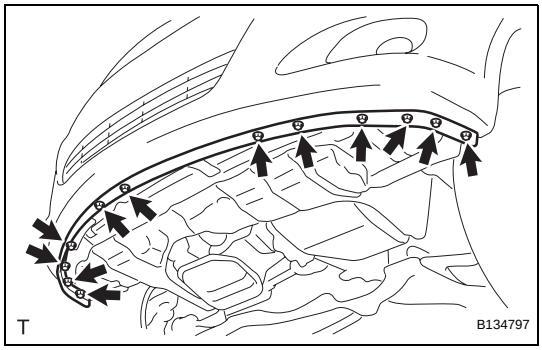

3. REMOVE FRONT BUMPER COVER

(a) Apply protective tape, as shown in the illustration.

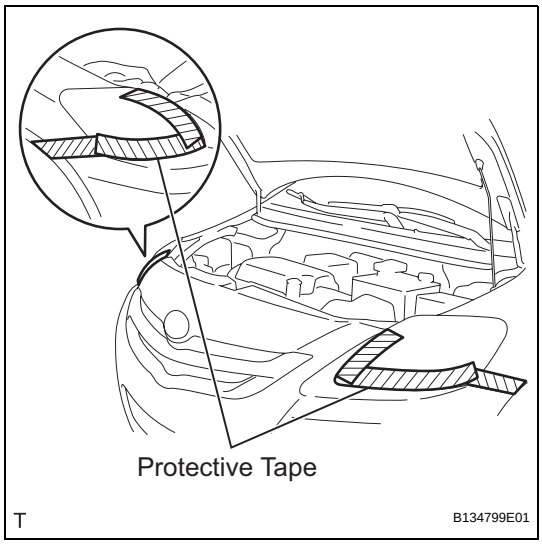

(b) w/ Front Spoiler:
(1) Remove the 5 screws and the 3 bolts.
(2) Remove the 2 screw grommets.
(3) Remove the 6 clips.

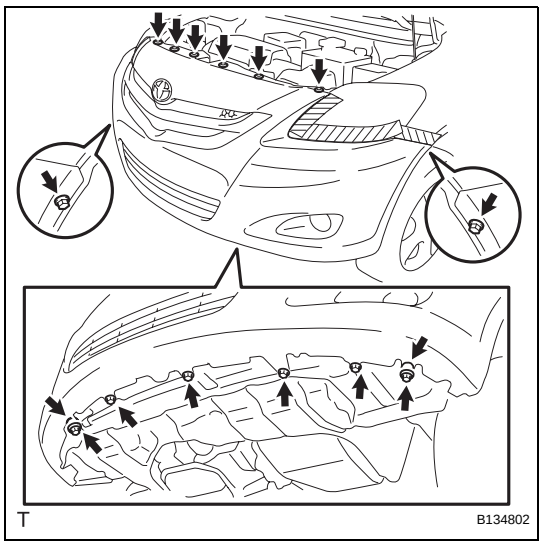

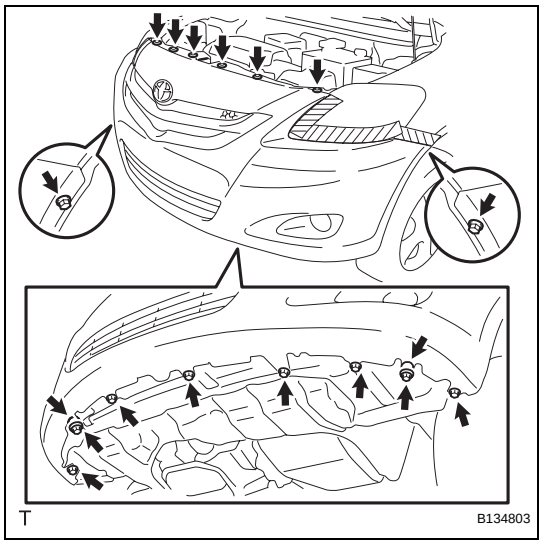

(c) w/o Front Spoiler:
  (1) Remove the 7 screws and the 3 bolts.
  (2) Remove the 2 screw grommets.
  (3) Remove the 6 clips.

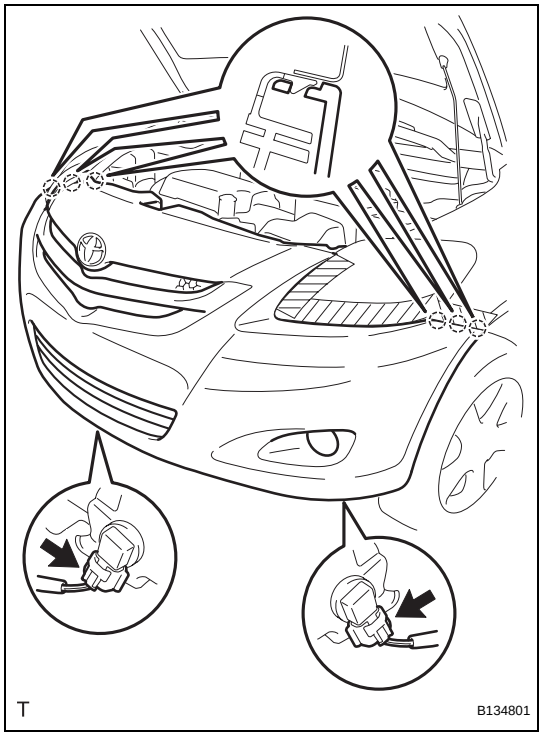

(d) w/ Fog Light:
  (1) Disengage the 6 claws and remove the front bumper cover.
  (2) Disconnect the 2 fog light connectors.

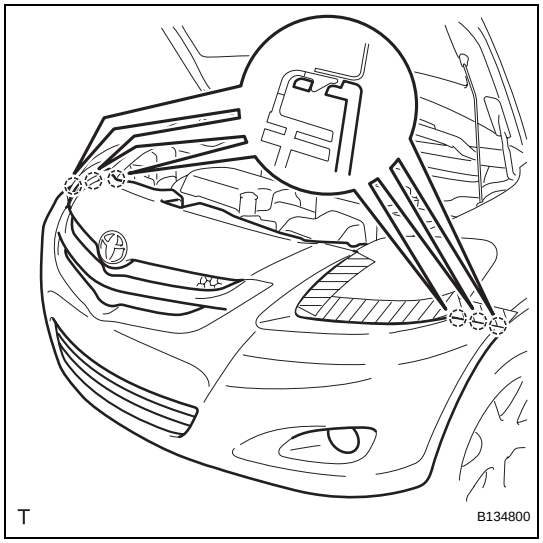

(e) w/o Fog Light:
  (1) Disengage the 6 claws and remove the front bumper cover.

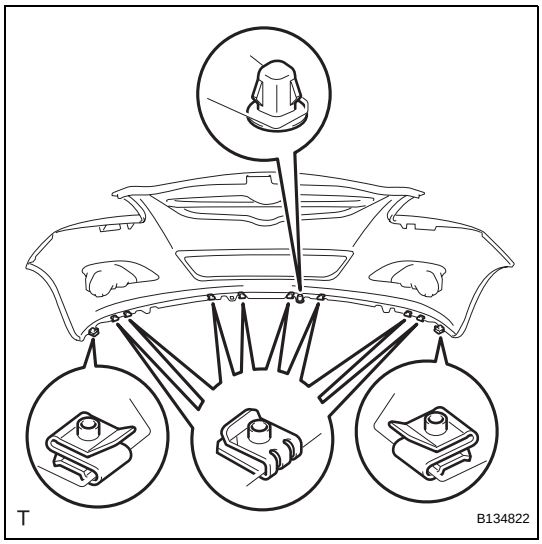

(f) w/ Front Spoiler:
  (1) Remove the 2 clips, the screw grommet and the 10 spring nuts.

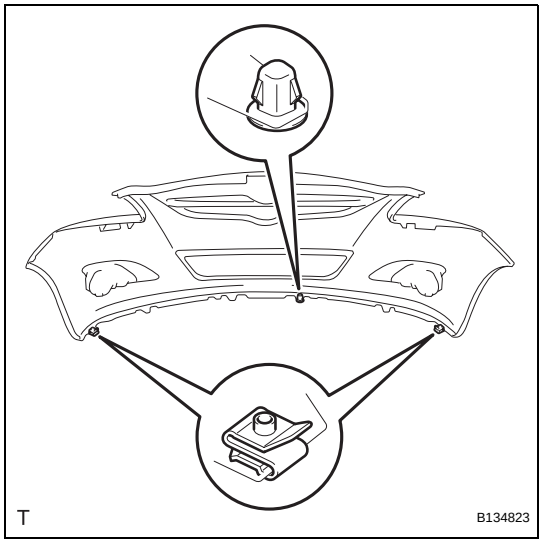

(g) w/o Front Spoiler:
  (1) Remove the 2 clips and the screw grommet.

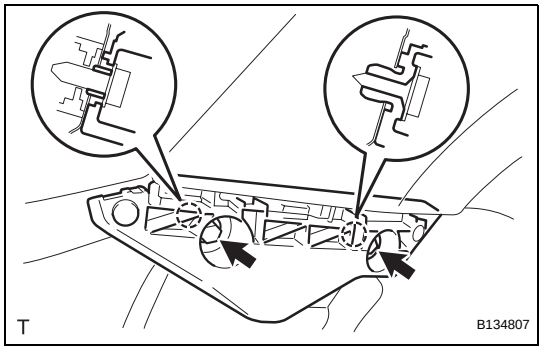

4. REMOVE FRONT BUMPER SIDE RETAINER LH
(a) Remove the screw and the bolt.
(b) Disengage the 2 claws and remove the front bumper side retainer.

5. REMOVE FRONT BUMPER SIDE RETAINER RH
HINT:
Use the same procedure as for the LH side.

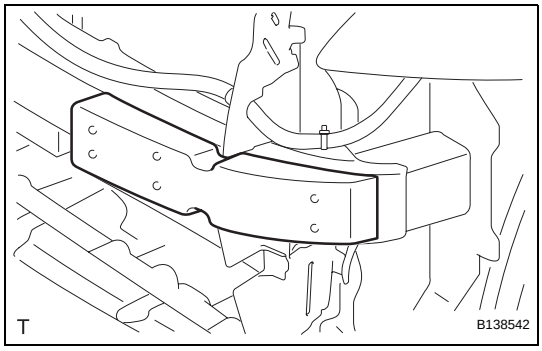

6. REMOVE FRONT BUMPER ENERGY ABSORBER LH (w/ Energy Absorber)
(a) Remove the front bumper energy absorber.

7. REMOVE FRONT BUMPER ENERGY ABSORBER RH (w/ Energy Absorber)
HINT:
Use the same procedure as for the LH side.

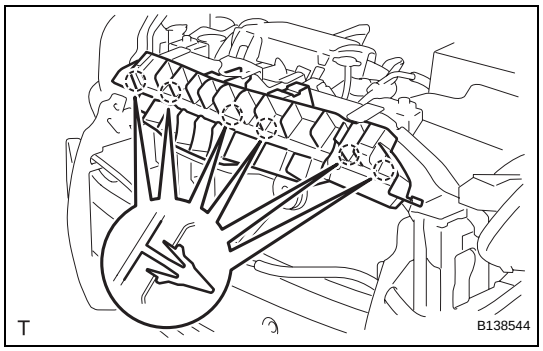

8. REMOVE RADIATOR SUPPORT UPPER ABSORBER

(a) Using a screwdriver, disengage the 6 claws and remove the radiator support upper absorber.

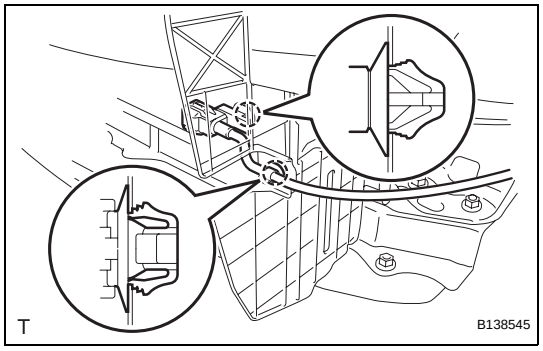

9. REMOVE THERMISTOR ASSEMBLY

(a) Remove the 2 clamps and the thermistor.

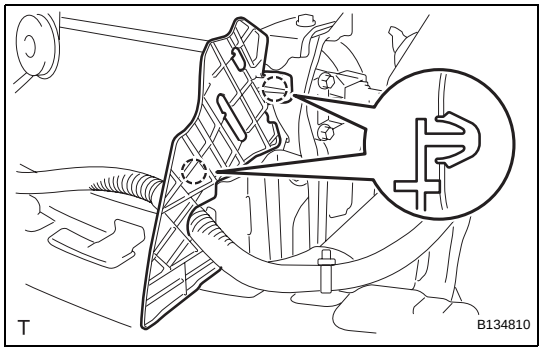

10. REMOVE RADIATOR SIDE AIR SEAL LH

(a) for Type A:

(1) Disengage the 2 claws and remove the radiator side air seal.

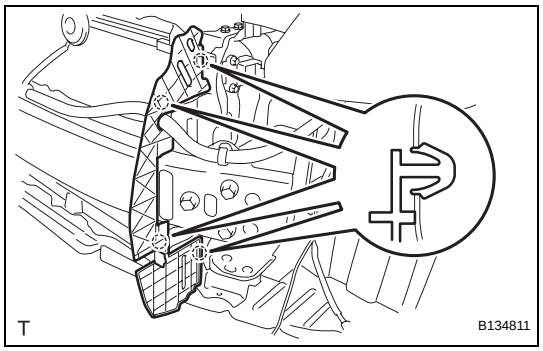

(b) for Type B:

(1) Disengage the 4 claws and remove the radiator side air seal.

11. REMOVE RADIATOR SIDE AIR SEAL RH

HINT:

Use the same procedure as for the LH side.

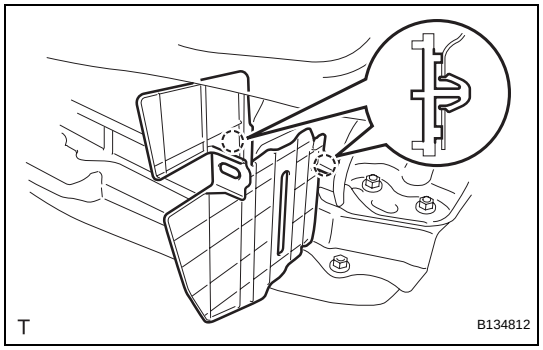

12. REMOVE RADIATOR SUPPORT EXTENSION LH (w/ Radiator Support Extension)

(a) Disengage the 2 claws and remove the radiator extension.

13. REMOVE RADIATOR SUPPORT EXTENSION RH (w/ Radiator Support Extension)

HINT:

Use the same procedure as for the LH side.

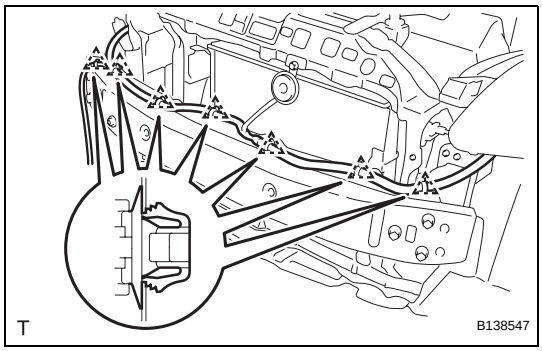

14. REMOVE NO. 2 ENGINE ROOM WIRE

(a) w/ Fog Light:

(1) Using a clip remover, remove the 7 clamps and the No. 2 engine room wire.

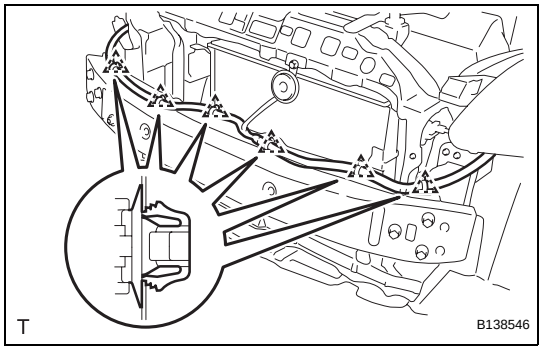

(b) w/o Fog Light:

(1) Using a clip remover, remove the 6 clamps and the No. 2 engine room wire.

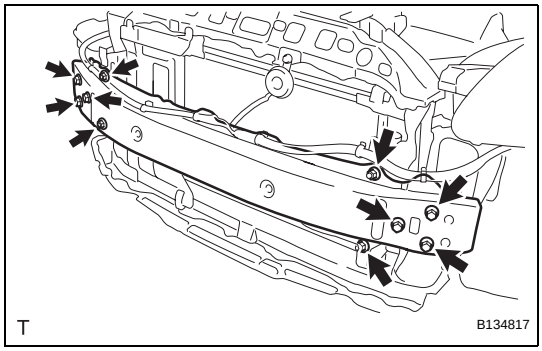

15. REMOVE FRONT BUMPER REINFORCEMENT SUB-ASSEMBLY

(a) Remove the 6 bolts, 4 nuts and the front bumper reinforcement.

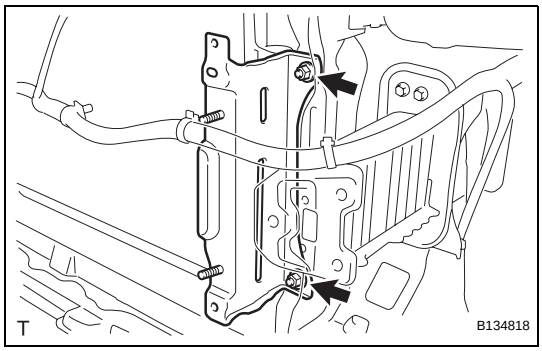

16. REMOVE FRONT BUMPER STONE DEFLECTOR BRACKET

HINT:

Use the same procedure for both sides.

(a) Remove the 2 nuts and the front bumper stone deflector bracket.

17. REMOVE HEADLIGHT ASSEMBLY

HINT:

Use the same procedure as for the LH side (See page LI-86).

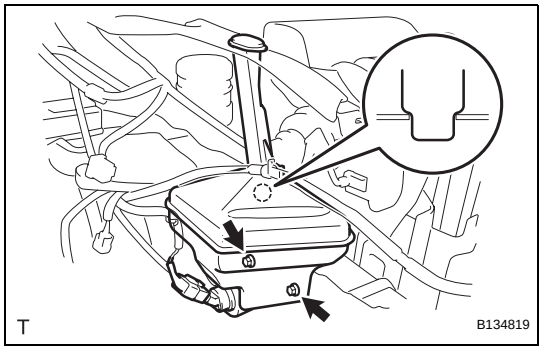

18. REMOVE WINDSHIELD WASHER JAR ASSEMBLY

(a) Remove the 2 bolts and windshield washer jar.

19. REMOVE FRONT BUMPER ARM SUB-ASSEMBLY LH

HINT:

Use the same procedure as for the LH side.

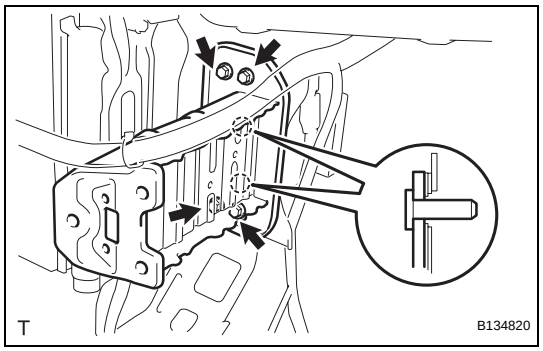

20. REMOVE FRONT BUMPER ARM SUB-ASSEMBLY RH

(a) Remove the 4 bolts and the front bumper arm.

DISASSEMBLY

1. REMOVE RADIATOR GRILLE EMBLEM (See page ET-57)

2. REMOVE RADIATOR GRILLE

(a) Remove the 2 screws.

(b) Using a screwdriver, disengage the 13 claws and remove the radiator grille.

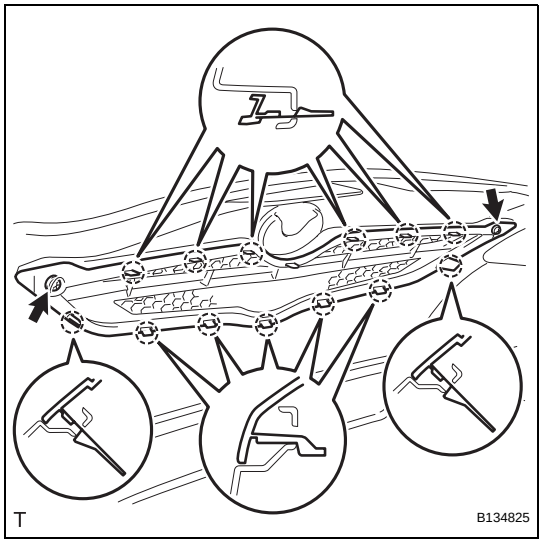

3. REMOVE RADIATOR LOWER GRILLE

(a) Disengage the 12 claws and remove the radiator lower grille.

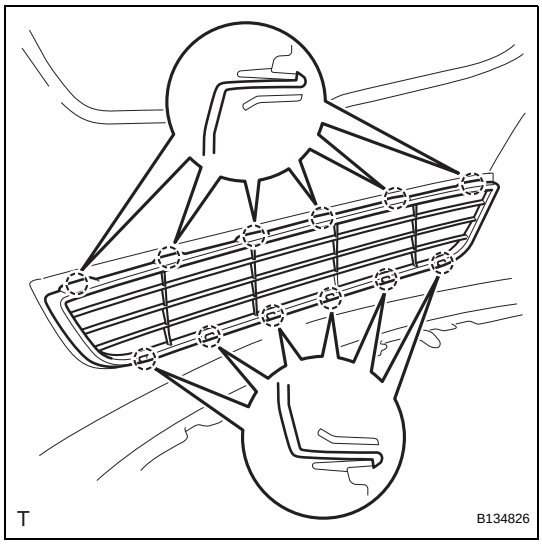

4. REMOVE FOG LIGHT ASSEMBLY LH (w/ Fog Light)

(a) Remove the 3 screws and the fog light.

5. REMOVE FOG LIGHT ASSEMBLY RH (w/ Fog Light)

HINT:

Use the same procedure as for the LH side.

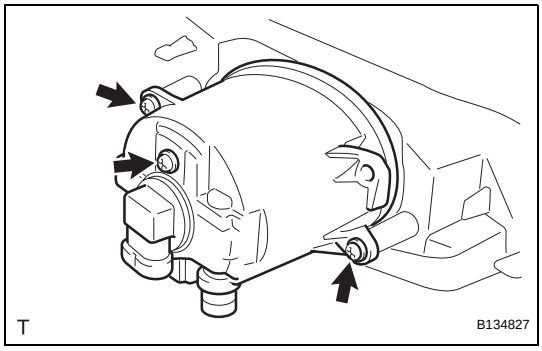

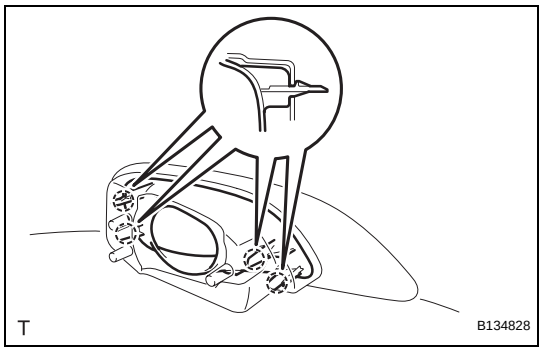

6. REMOVE FOG LIGHT COVER LH

(a) w/ Fog Light:

(1) Disengage the 4 claws and remove the fog light cover.

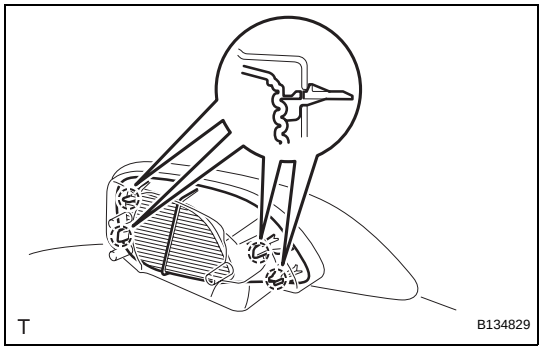

(b) w/o Fog Light:

(1) Disengage the 4 claws and remove the fog light cover.

7. REMOVE FOG LIGHT COVER RH

HINT:

Use the same procedure as for the LH side.

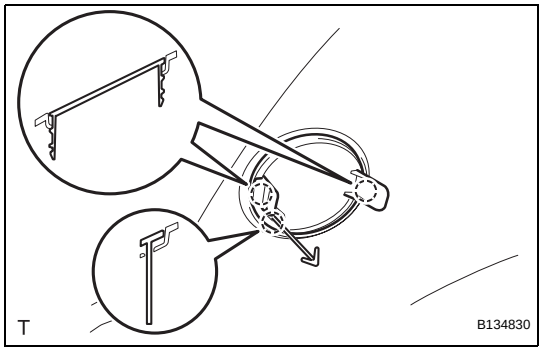

8. REMOVE FRONT BUMPER HOLE COVER

(a) Disengage the 3 claws and remove the front bumper hole cover.

REASSEMBLY

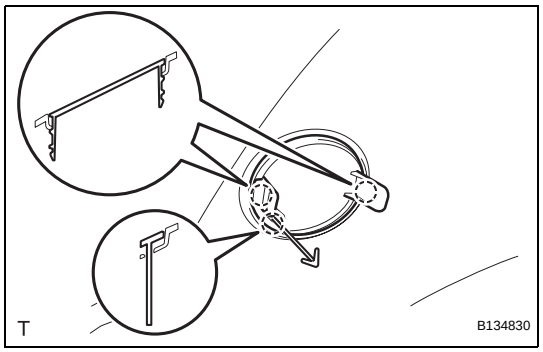

1. INSTALL FRONT BUMPER HOLE COVER

(a) Engage the 3 claws and install the front bumper hole cover.

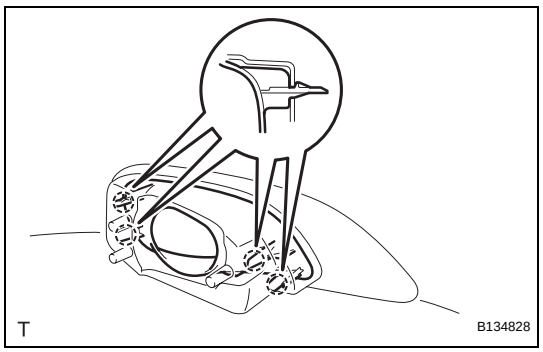

2. INSTALL FOG LIGHT COVER LH

(a) w/ Fog Light:

(1) Engage the 4 claws and install the fog light cover.

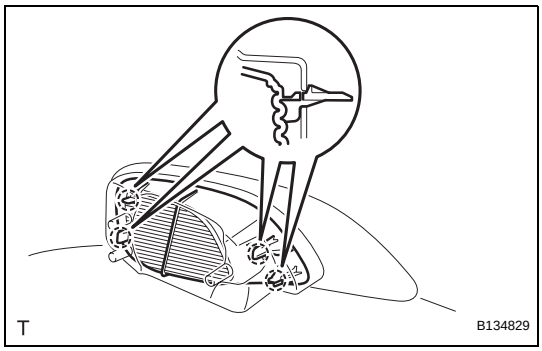

(b) w/o Fog Light:
(1) Engage the 4 claws and install the fog light cover.

3. INSTALL FOG LIGHT COVER RH
HINT:
Use the same procedure as for the LH side.

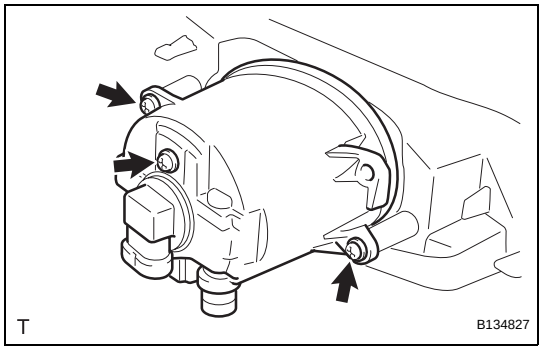

4. INSTALL FOG LIGHT ASSEMBLY LH (w/ Fog Light)
(a) Install the fog light with the 3 screws.

5. INSTALL FOG LIGHT ASSEMBLY RH (w/ Fog Light)
HINT:
Use the same procedure as for the LH side.

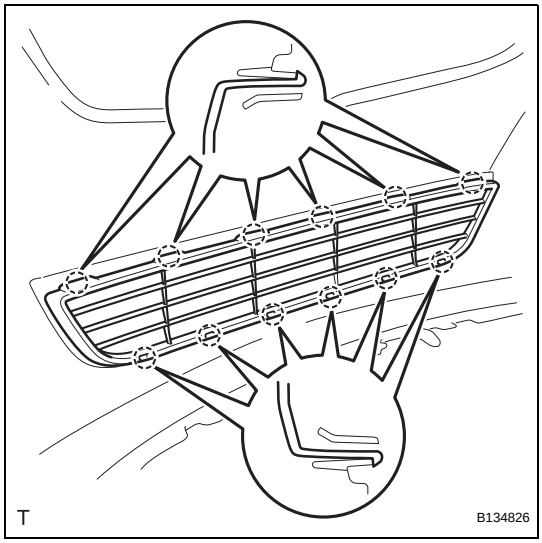

6. INSTALL RADIATOR LOWER GRILLE
(a) Engage the 12 claws and install the radiator lower grille.

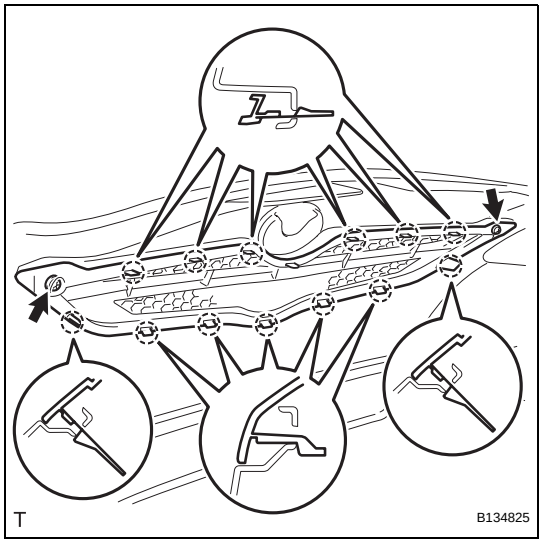

7. INSTALL RADIATOR GRILLE
(a) Engage the 13 claws and install the radiator grille.
(b) Tighten the 2 screws.

8. INSTALL RADIATOR GRILLE EMBLEM (See page ET-60)

INSTALLATION

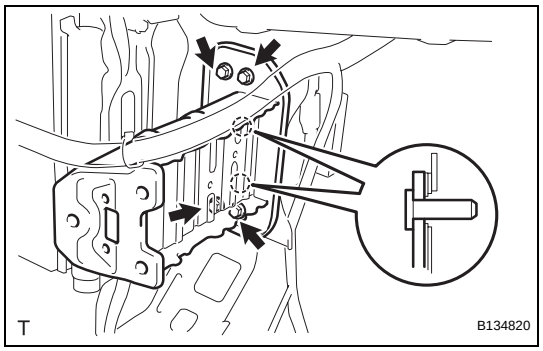

1. INSTALL FRONT BUMPER ARM SUB-ASSEMBLY LH

(a) Insert the 2 locating pins into the 2 body holes and install the front bumper arm with the 4 bolts.
Torque: 40 N*m (410 kgf*cm, 30 ft.*lbf)

2. INSTALL FRONT BUMPER ARM SUB-ASSEMBLY RH

HINT:
Use the same procedure as for the LH side.

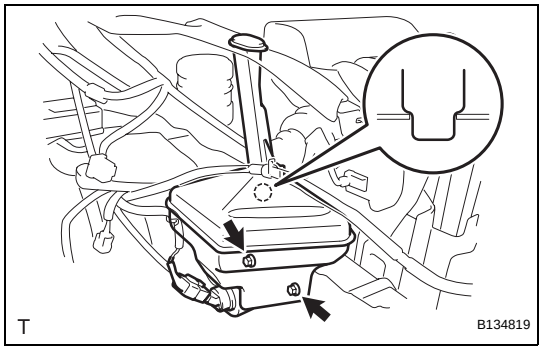

3. INSTALL WINDSHIELD WASHER JAR ASSEMBLY

(a) Insert the location pin into the body hole and install the windshield washer jar with the 2 bolts.
Torque: 5.5 N*m (55 kgf*cm, 49 in.*lbf)

4. INSTALL HEADLIGHT ASSEMBLY

HINT:
Use the same procedure as for the LH side (See page LI-92).

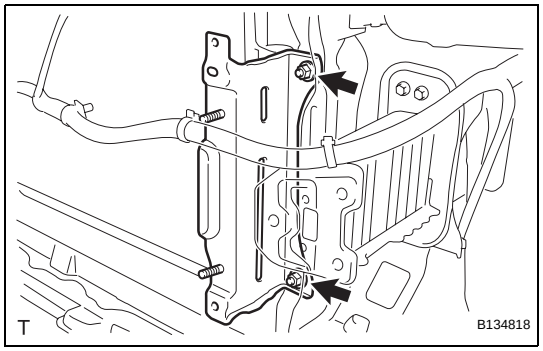

5. INSTALL FRONT BUMPER STONE DEFLECTOR BRACKET

HINT:
Use the same procedure for both sides.

(a) Install the front bumper stone deflector bracket with the 2 nuts.
Torque: 5.5 N*m (55 kgf*cm, 49 in.*lbf)

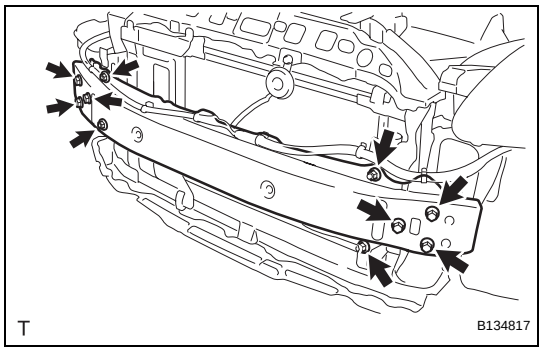

6. INSTALL FRONT BUMPER REINFORCEMENT SUB-ASSEMBLY

(a) Install the front bumper reinforcement with the 4 nuts and 6 bolts.
Torque: 5.5 N*m (55 kgf*cm, 49 in.*lbf) for nut
40 N*m (410 kgf*cm, 30 ft.*lbf) for bolt

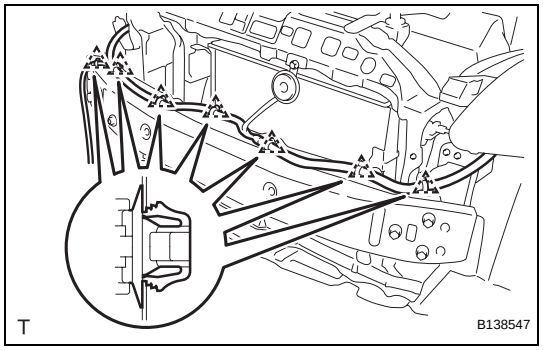

7. INSTALL NO. 2 ENGINE ROOM WIRE

(a) w/ Fog Light:
(1) Install the No. 2 engine room wire with the 7 clamps.

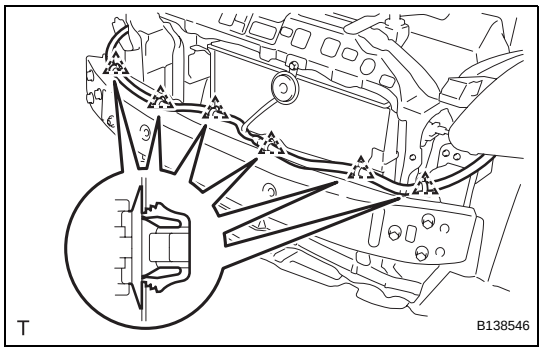

(b) w/o Fog Light:
(1) Install the No. 2 engine room wire with the 6 clamps.

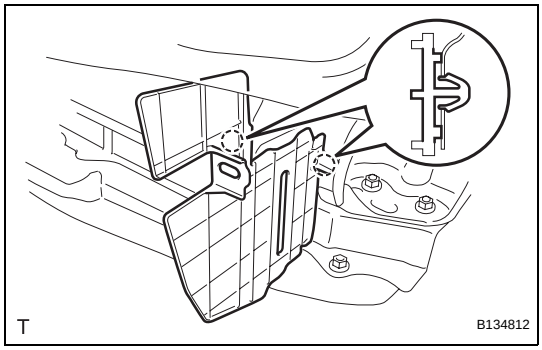

8. INSTALL RADIATOR SUPPORT EXTENSION LH (w/ Radiator Support Extension)
(a) Engage the 2 claws and install the radiator support extension.

9. INSTALL RADIATOR SUPPORT EXTENSION RH (w/ Radiator Support Extension)
HINT:
Use the same procedure as for the LH side.

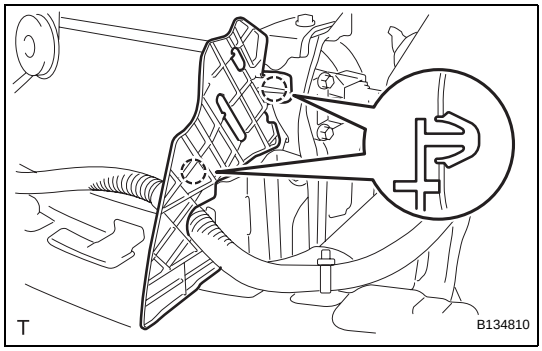

10. INSTALL RADIATOR SIDE AIR SEAL LH
(a) for Type A:
(1) Engage the 2 claws and install the radiator side air seal.

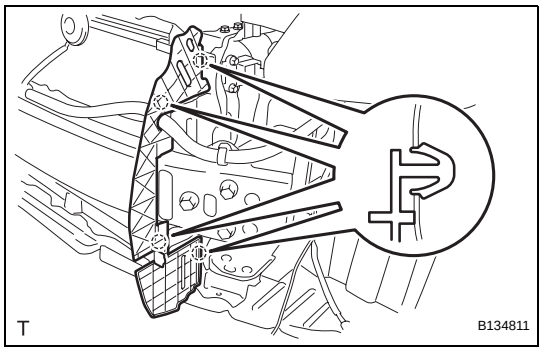

(b) for Type B:
(1) Engage the 4 claws and install the radiator side air seal.

11. INSTALL RADIATOR SIDE AIR SEAL RH
HINT:
Use the same procedure as for the LH side.

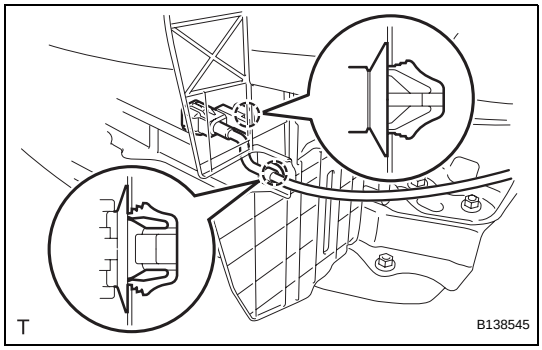

12. INSTALL THERMISTOR ASSEMBLY
(a) Install the thermistor with the 2 clamps.

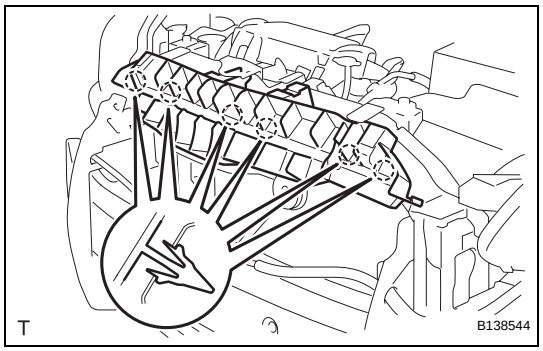

13. INSTALL RADIATOR SUPPORT UPPER ABSORBER

(a) Engage the 6 claws and install the radiator support absorber.

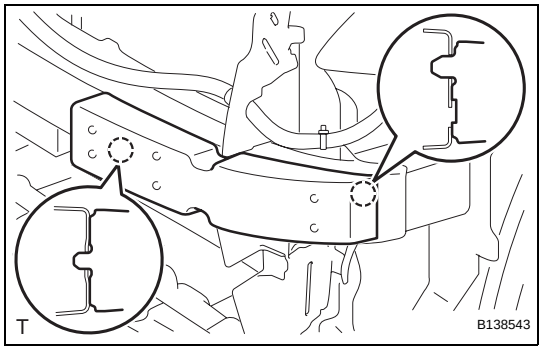

14. INSTALL FRONT BUMPER ENERGY ABSORBER LH (w/ Energy Absorber)

(a) Insert the 2 bosses into the hole of the front bumper reinforcement and install the front bumper energy absorber.

15. INSTALL FRONT BUMPER ENERGY ABSORBER RH (w/ Energy Absorber)

HINT:
Use the same procedure as for the LH side.

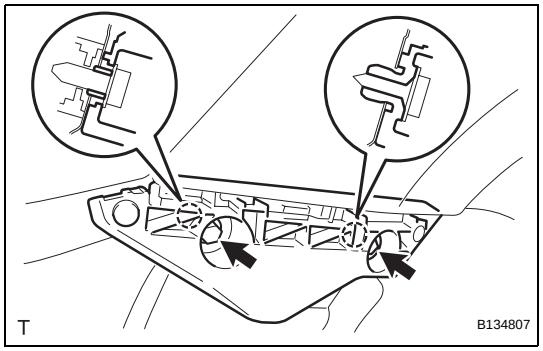

16. INSTALL FRONT BUMPER SIDE RETAINER LH

(a) Engage the 2 claws and install the front bumper side retainer.

(b) Tighten the screw and the bolt.
Torque: 5.0 N*m (51 kgf*cm, 44 in.*lbf) for bolt

17. INSTALL FRONT BUMPER SIDE RETAINER RH

HINT:
Use the same procedure as for the LH side.

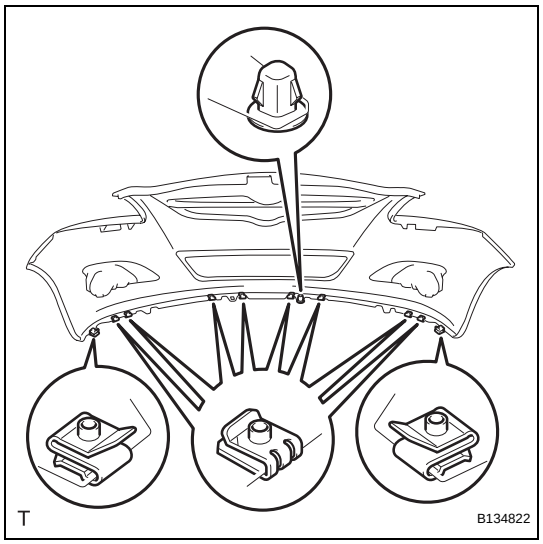

18. INSTALL FRONT BUMPER COVER

(a) w/ Front Spoiler:

(1) Install the 2 clips, screw grommet and the 10 spring nuts.

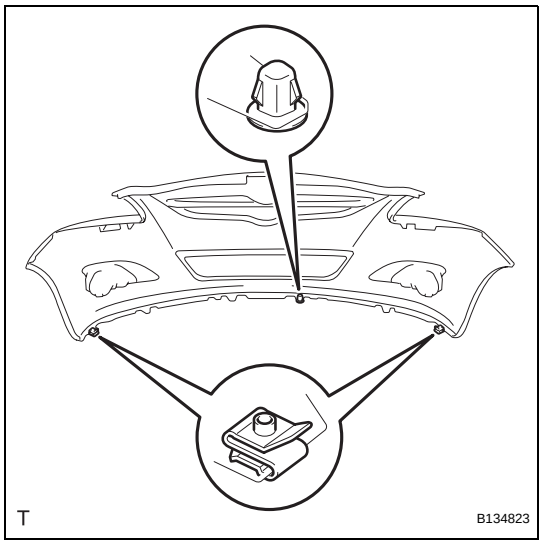

(b) w/o Front spoiler:
  (1) Install the 2 clips and the screw grommet.

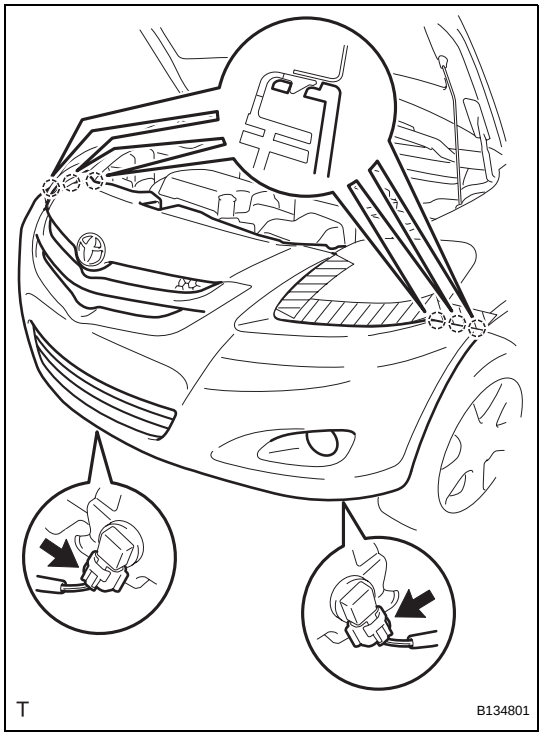

(c) w/ Fog Light:
  (1) Connect the 2 fog light connectors.
  (2) Engage the 6 claws and install the front bumper cover.

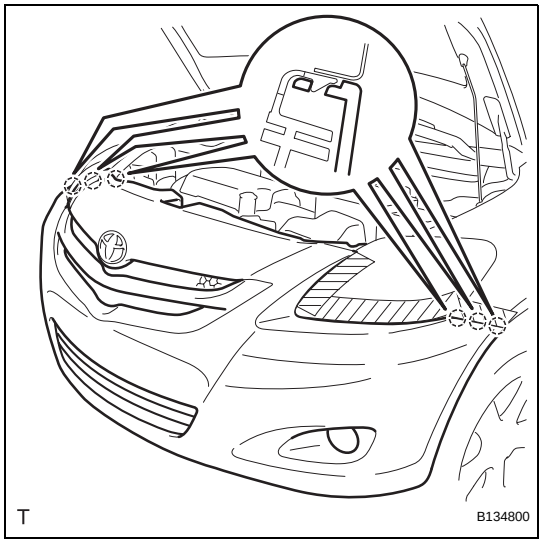

(d) w/o Fog Light:
  (1) Engage the 6 claws and install the front bumper cover.

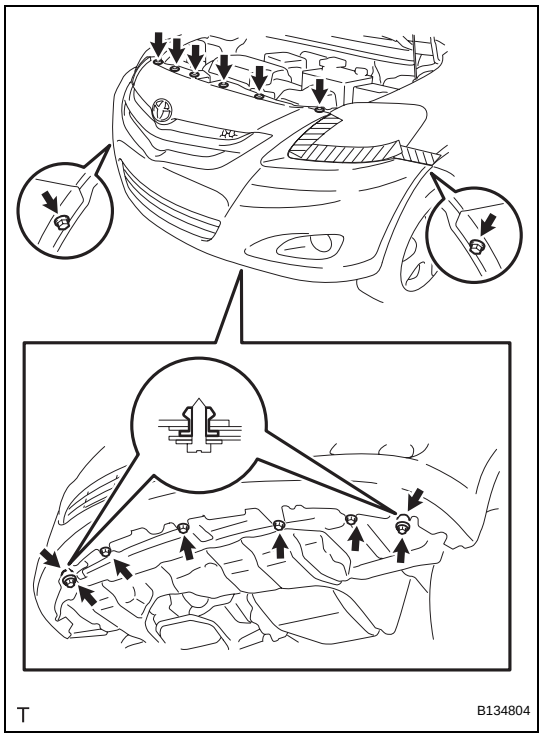

(e) w/ Front Spoiler:
  (1) Install the 6 clips.
  (2) Install the 2 screw grommets.
  (3) Tighten the 5 screws and the 3 bolts.

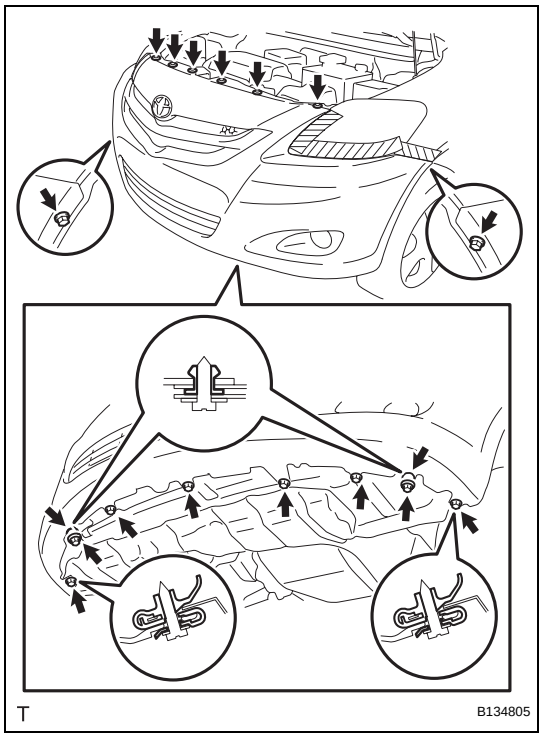

(f) w/o Front Spoiler:
  (1) Install the 6 clips.
  (2) Install the 2 screw grommets.
  (3) Tighten the 7 screws and the 3 bolts.

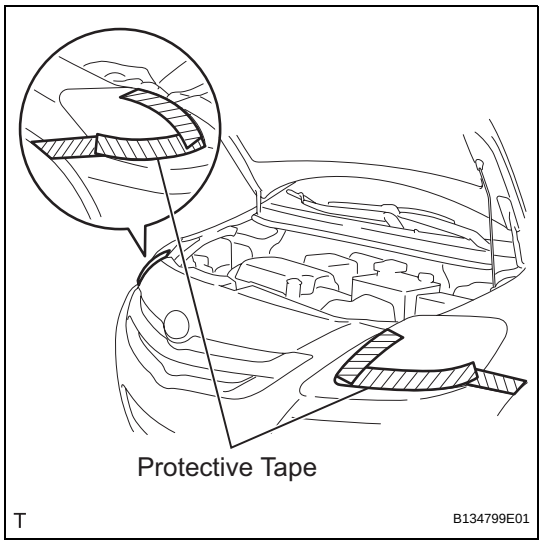

(g) Remove the protective tape.

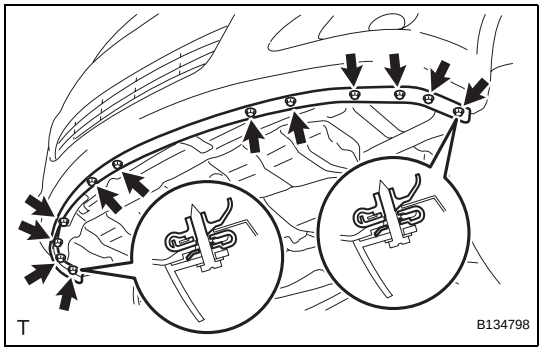

19. INSTALL FRONT SPOILER COVER (w/ Front Spoiler)
(a) Install the front spoiler cover with the 2 screws and the 10 bolts.

20. CONNECT CABLE TO NEGATIVE BATTERY TERMINAL
Torque: 5.4 N*m (55 kgf*cm, 48 in.*lbf)

21. PREPARE VEHICLE FOR HEADLIGHT AIMING ADJUSTMENT (See page LI-87)

22. PREPARE FOR HEADLIGHT AIMING (for Using a Screen) (See page LI-88)

23. INSPECT HEADLIGHT AIMING (See page LI-90)

24. ADJUST HEADLIGHT AIMING (See page LI-91)

25. PREPARE VEHICLE FOR FOG LIGHT AIMING ADJUSTMENT (w/ Fog Light) (See page LI-109)

26. PREPARE FOR FOG LIGHT AIMING (w/ Fog Light) (See page LI-110)

27. INSPECT FOG LIGHT AIMING (w/ Fog Light) (See page LI-111)

28. ADJUST FOG LIGHT AIMING (w/ Fog Light) (See page LI-112)

FRONT BUMPER (for Hatchback)

COMPONENTS

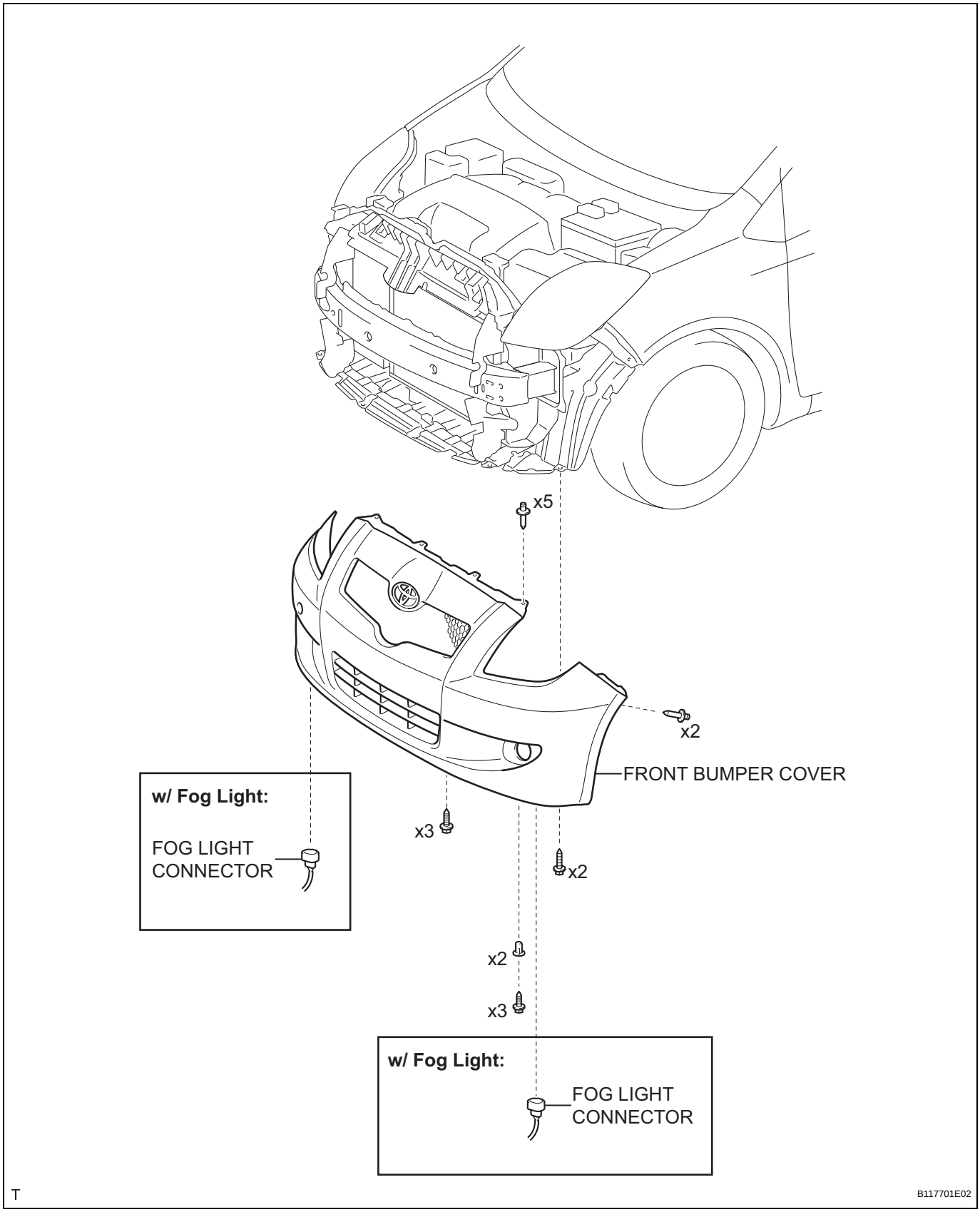

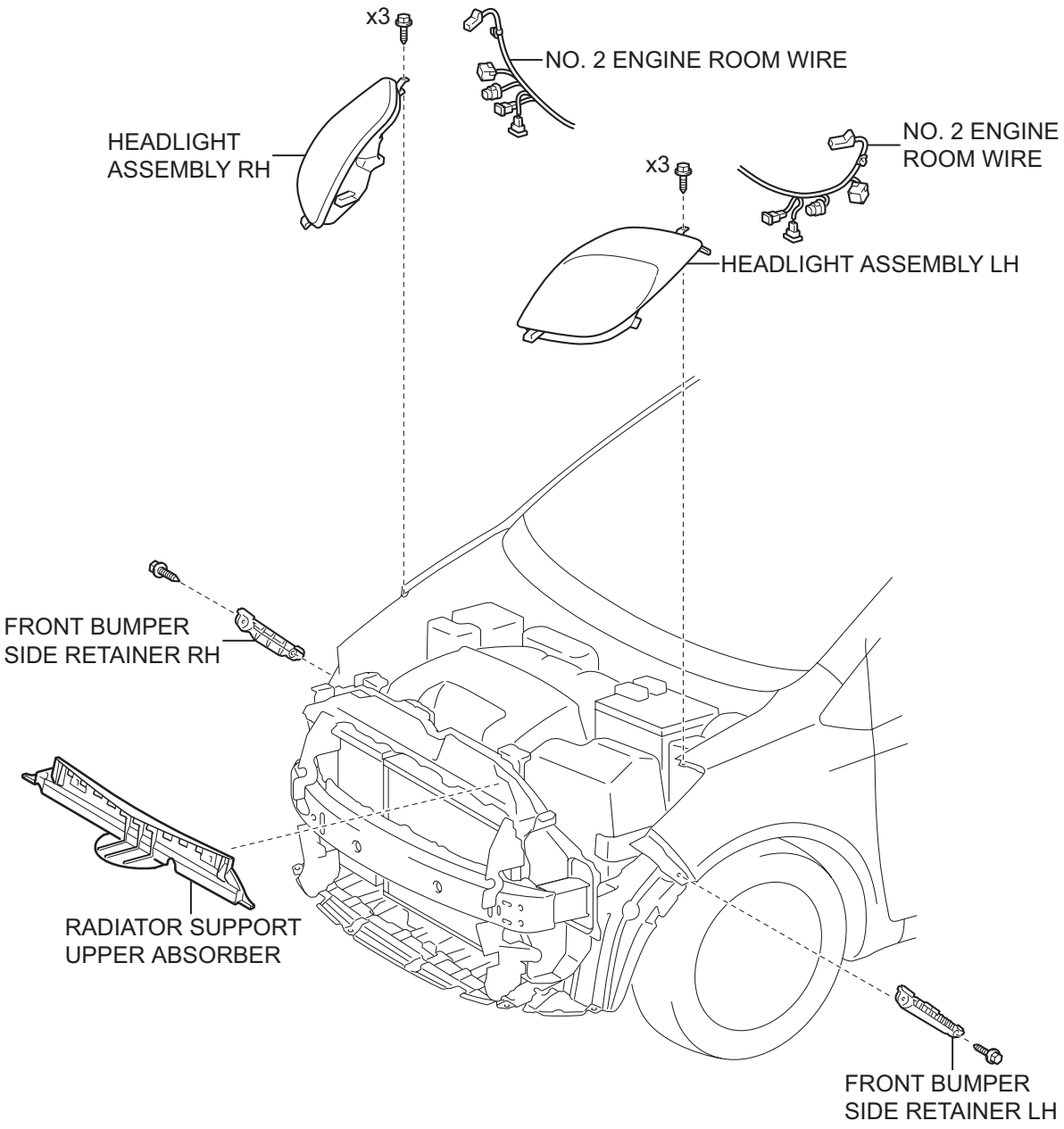

T

B117702E01

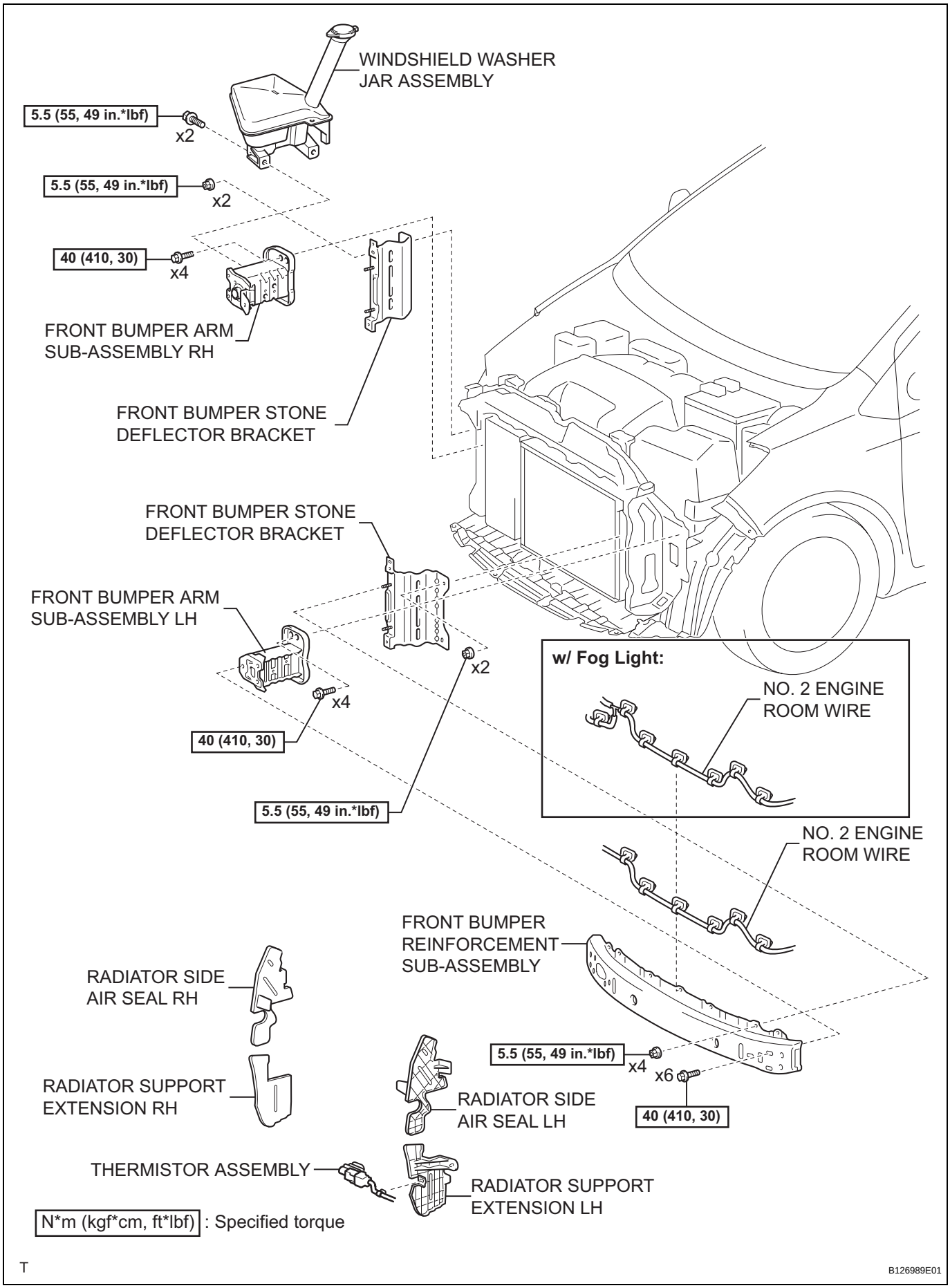
WINDSHIELD WASHER JAR ASSEMBLY
5.5 (55, 49 in.*lbf)
x2
5.5 (55, 49 in.*lbf)
x2
40 (410, 30)
x4
FRONT BUMPER ARM SUB-ASSEMBLY RH
FRONT BUMPER STONE DEFLECTOR BRACKET
FRONT BUMPER STONE DEFLECTOR BRACKET
FRONT BUMPER ARM SUB-ASSEMBLY LH
x2
x4
40 (410, 30)
5.5 (55, 49 in.*lbf)
w/ Fog Light:
NO. 2 ENGINE ROOM WIRE
NO. 2 ENGINE ROOM WIRE
FRONT BUMPER REINFORCEMENT SUB-ASSEMBLY
RADIATOR SIDE AIR SEAL RH
RADIATOR SUPPORT EXTENSION RH
5.5 (55, 49 in.*lbf)
x4
x6
40 (410, 30)
RADIATOR SIDE AIR SEAL LH
THERMISTOR ASSEMBLY
RADIATOR SUPPORT EXTENSION LH
N*m (kgf*cm, ft*lbf) : Specified torque
T
B126989E01

ET

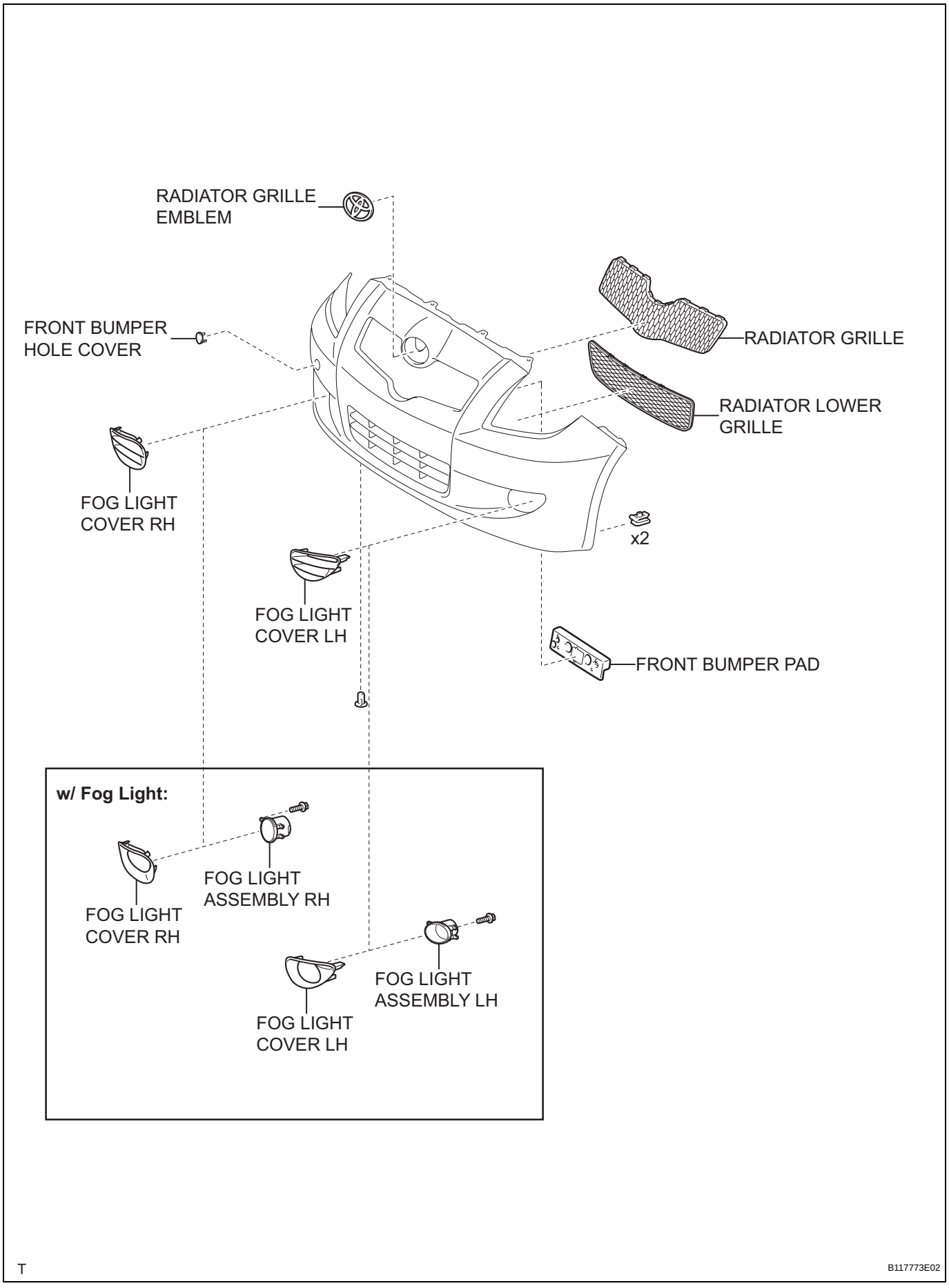
RADIATOR GRILLE EMBLEM
FRONT BUMPER HOLE COVER
RADIATOR GRILLE
RADIATOR LOWER GRILLE
FOG LIGHT COVER RH
x2
FOG LIGHT COVER LH
FRONT BUMPER PAD
w/ Fog Light:
FOG LIGHT ASSEMBLY RH
FOG LIGHT COVER RH
FOG LIGHT ASSEMBLY LH
FOG LIGHT COVER LH
T
B117773E02

REMOVAL

1. DISCONNECT CABLE FROM NEGATIVE BATTERY TERMINAL

2. REMOVE FRONT BUMPER COVER

(a) Apply protective tape, as shown in the illustration.

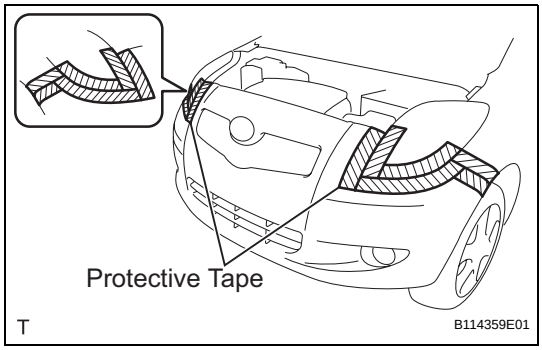

(b) Remove the 8 screws.
(c) Remove the 2 screw grommets.
(d) Remove the 7 clips.

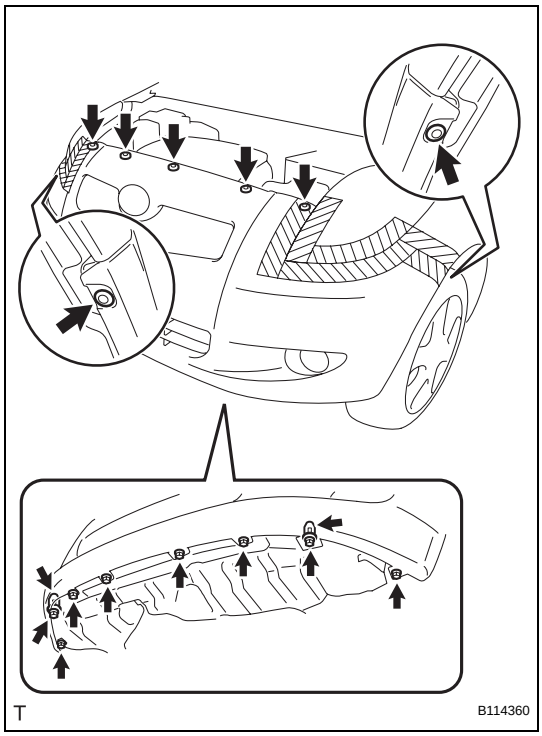

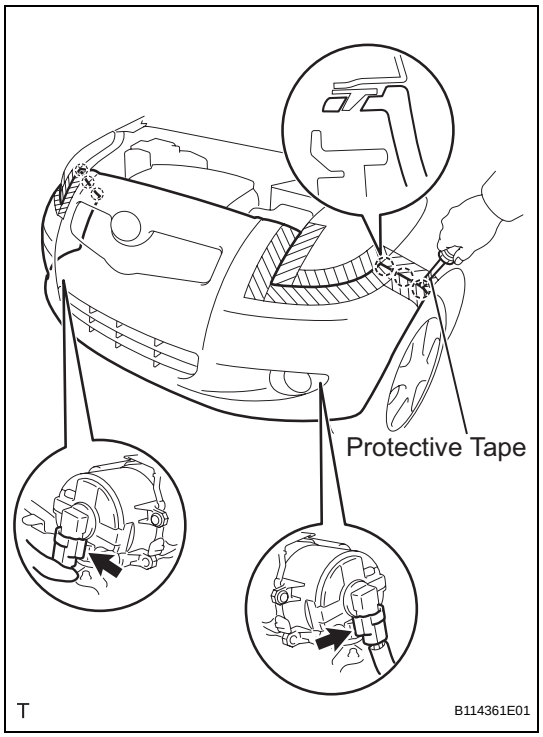

(e) w/ Fog Light:
  (1) Using a screwdriver with its tip wrapped in protective tape, disengage the 6 claws.
  (2) Disconnect the 2 fog light connectors and remove the front bumper cover.

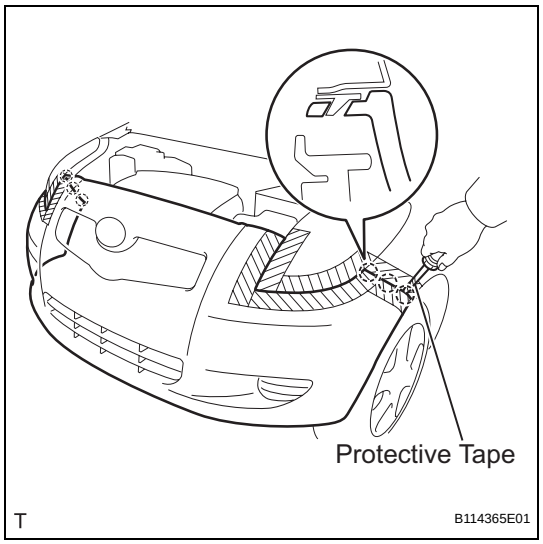

(f) w/o Fog Light:
  (1) Using a screwdriver with its tip wrapped in protective tape, disengage the 6 claws and remove the front bumper cover.

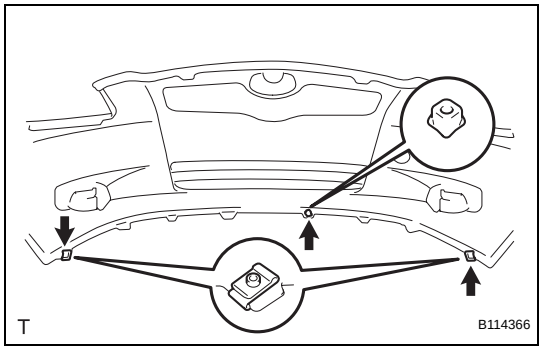

(g) Remove the 2 clips and the screw grommet.

3. REMOVE HEADLIGHT ASSEMBLY LH (See page LI-97)

4. REMOVE HEADLIGHT ASSEMBLY RH

HINT:
Use the same procedure as for the LH side.

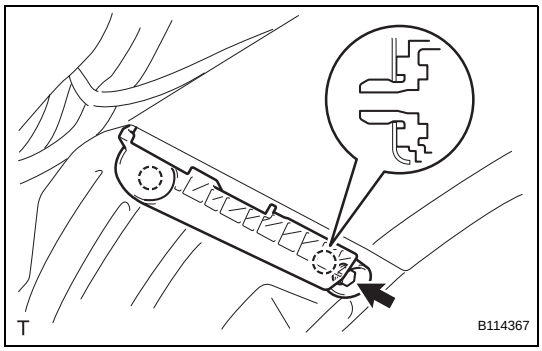

5. REMOVE FRONT BUMPER SIDE RETAINER LH
(a) Remove the screw.
(b) Using a clip remover, disengage the 2 claws and remove the front bumper side retainer.

6. REMOVE FRONT BUMPER SIDE RETAINER RH
HINT:
Use the same procedure as for the LH side.

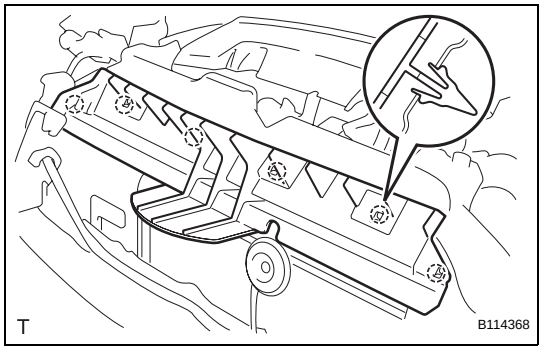

7. REMOVE RADIATOR SUPPORT UPPER ABSORBER
(a) Using a screwdriver, disengage the 6 claws and remove the radiator support upper absorber.

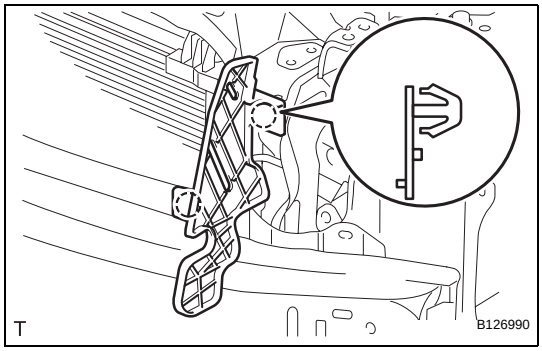

8. REMOVE RADIATOR SIDE AIR SEAL LH
(a) Disengage the 2 claws and remove the radiator side air seal.

9. REMOVE RADIATOR SIDE AIR SEAL RH
HINT:
Use the same procedure as for the LH side.

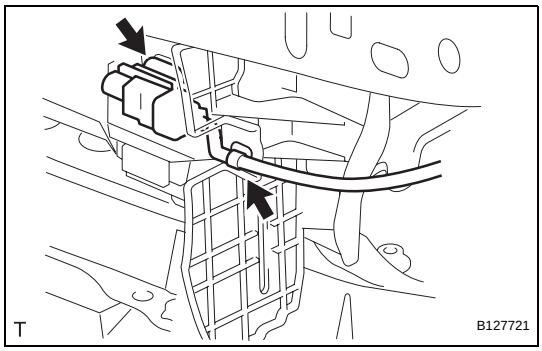

10. REMOVE THERMISTOR ASSEMBLY
(a) Remove the wiring harness clamp.
(b) Remove the thermistor.

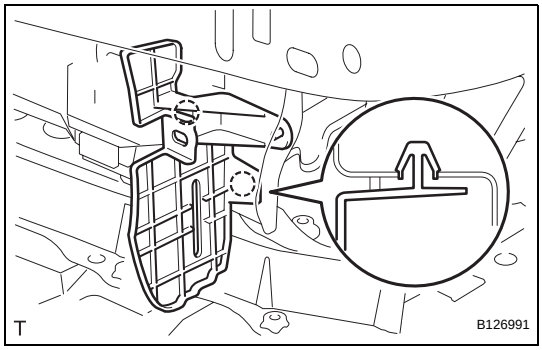

11. REMOVE RADIATOR SUPPORT EXTENSION LH
(a) Disengage the 2 claws and remove the radiator support extension.

12. REMOVE RADIATOR SUPPORT EXTENSION RH
HINT:
Use the same procedure as for the LH side.

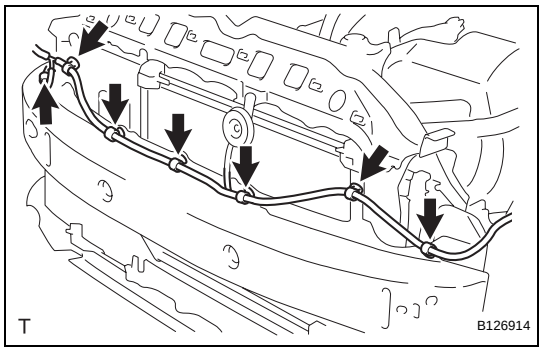

13. REMOVE NO. 2 ENGINE ROOM WIRE

(a) w/ Fog Light:

(1) Using a clip remover, remove the 7 wiring harness clamps.

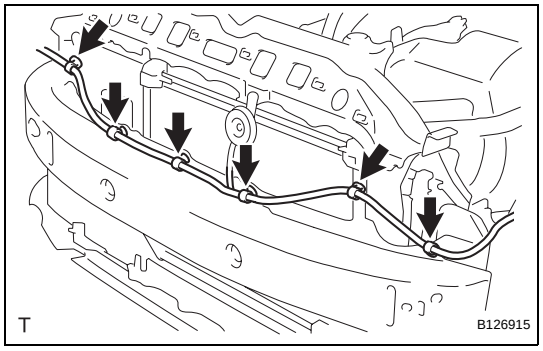

(b) w/o Fog Light:

(1) Using a clip remover, remove the 6 wiring harness clamps.

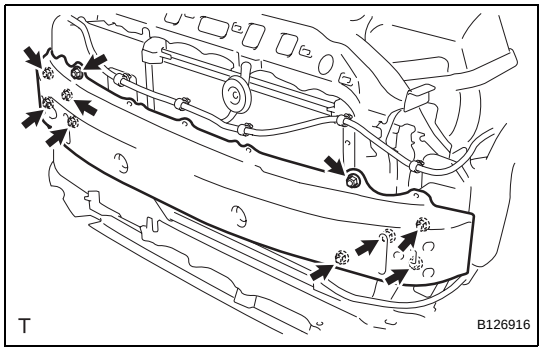

14. REMOVE FRONT BUMPER REINFORCEMENT SUB-ASSEMBLY

(a) Remove the 4 nuts, the 6 bolts and the front bumper reinforcement.

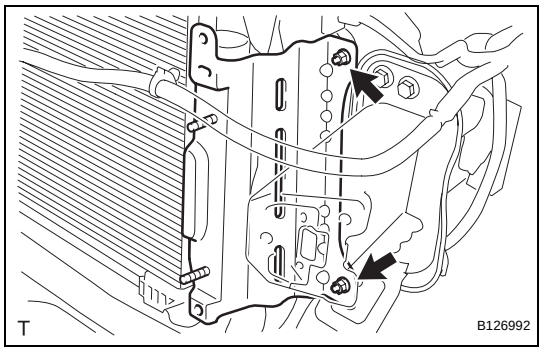

15. REMOVE FRONT BUMPER STONE DEFLECTOR BRACKET

HINT:

Use the same procedure for both sides.

(a) Remove the 2 nuts and the front bumper stone deflector bracket.

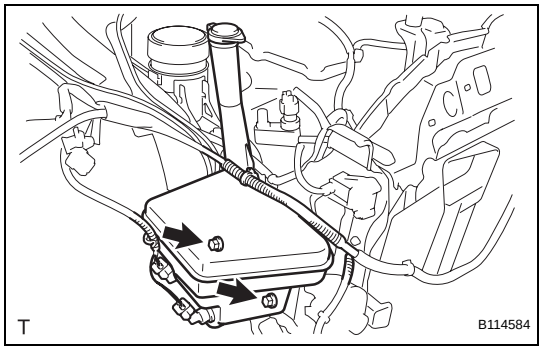

16. REMOVE WINDSHIELD WASHER JAR ASSEMBLY

(a) Remove the 2 bolts and the windshield washer jar.

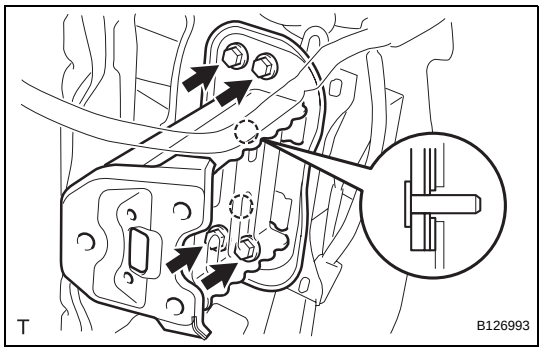

17. REMOVE FRONT BUMPER ARM SUB-ASSEMBLY LH
(a) Remove the 4 bolts and the front bumper arm.

18. REMOVE FRONT BUMPER ARM SUB-ASSEMBLY RH
HINT:
Use the same procedure as for the LH side.

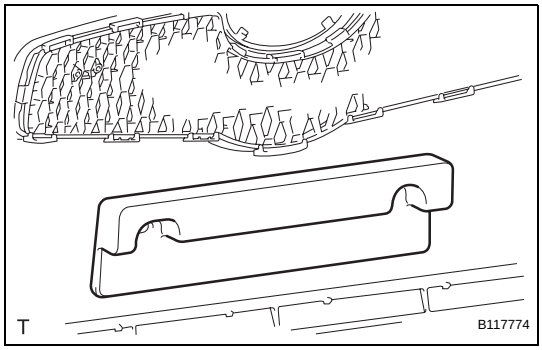

DISASSEMBLY

1. REMOVE FRONT BUMPER PAD
(a) Remove the front bumper pad.

2. REMOVE RADIATOR GRILLE EMBLEM (See page ET-67)

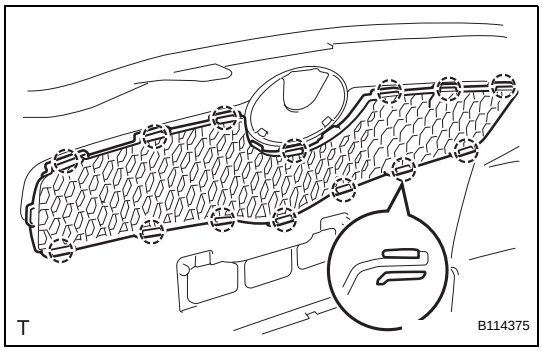

3. REMOVE RADIATOR GRILLE
(a) Using a screwdriver, disengage the 14 claws and remove the radiator grille.

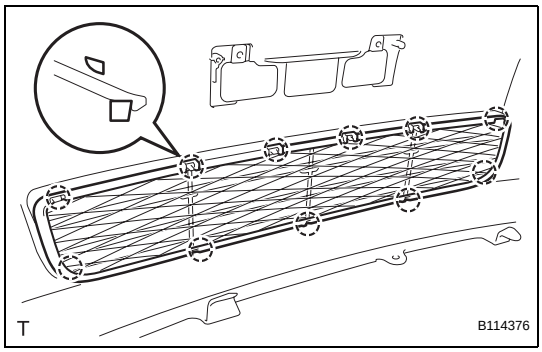

4. REMOVE RADIATOR LOWER GRILLE
(a) Disengage the 11 claws and remove the radiator lower grille.

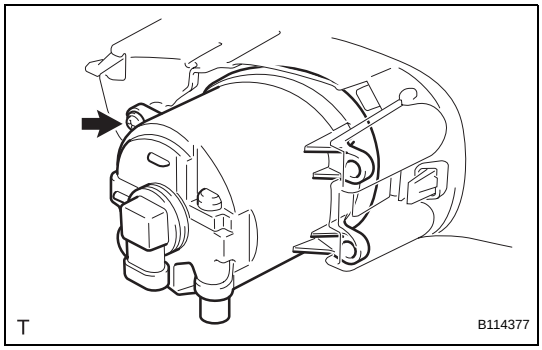

5. REMOVE FOG LIGHT ASSEMBLY LH
(a) Remove the screw and the fog light.

6. REMOVE FOG LIGHT ASSEMBLY RH
HINT:
Use the same procedure as for the LH side.

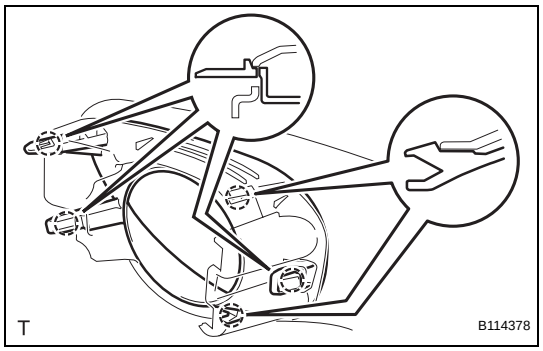

7. REMOVE FOG LIGHT COVER LH

(a) w/ Fog Light:

(1) Disengage the 5 claws and remove the fog light cover.

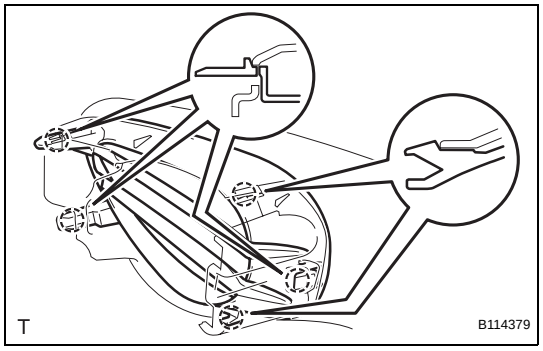

(b) w/o Fog Light:

(1) Disengage the 5 claws and remove the fog light cover.

8. REMOVE FOG LIGHT COVER RH

HINT:

Use the same procedure as for the LH side.

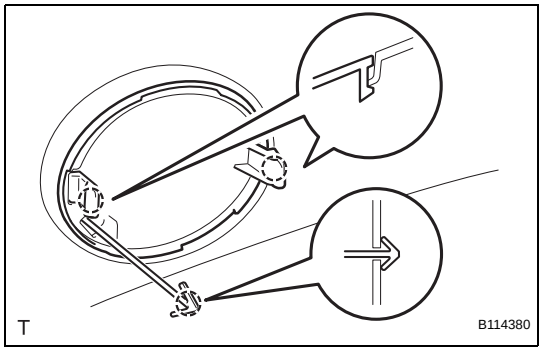

9. REMOVE FRONT BUMPER HOLE COVER

(a) Disengage the 3 claws and remove the front bumper hole cover.

REASSEMBLY

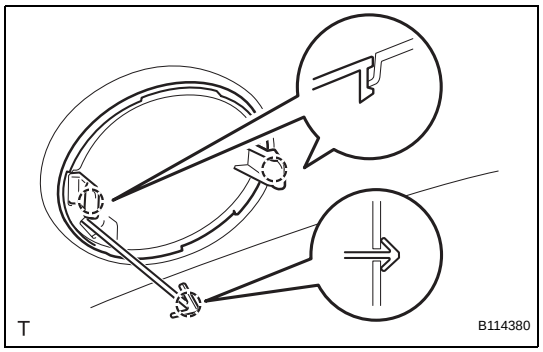

1. INSTALL FRONT BUMPER HOLE COVER

(a) Engage the 3 claws and install the front bumper hole cover.

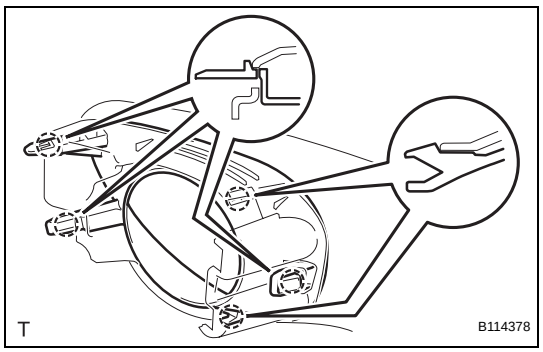

2. INSTALL FOG LIGHT COVER LH

(a) w/ Fog Light:

(1) Engage the 5 claws and install the fog light cover.

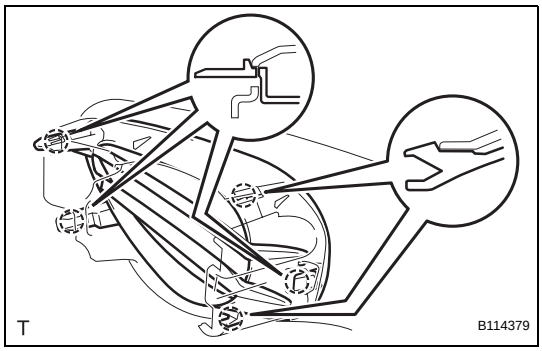

(b) w/o Fog Light:
(1) Engage the 5 claws and install the fog light cover.

3. INSTALL FOG LIGHT COVER RH
HINT:
Use the same procedure as for the LH side.

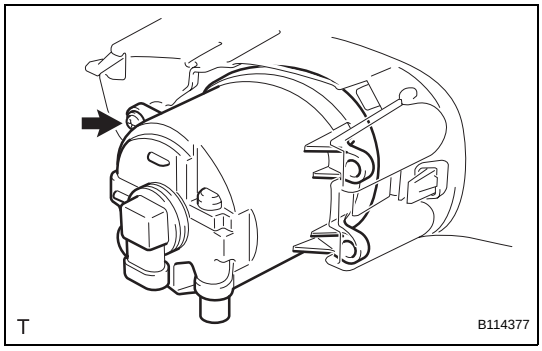

4. INSTALL FOG LIGHT ASSEMBLY LH
(a) Install the fog light with the screw.

5. INSTALL FOG LIGHT ASSEMBLY RH
HINT:
Use the same procedure as for the LH side.

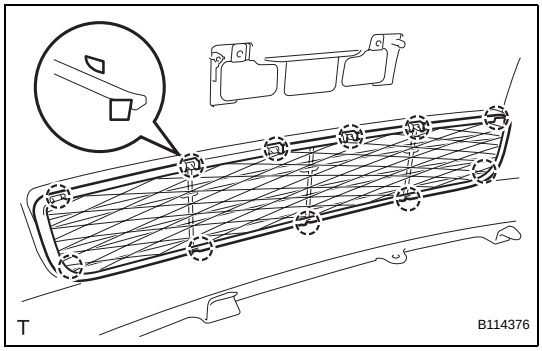

6. INSTALL RADIATOR LOWER GRILLE
(a) Engage the 11 claws and install the radiator lower grille.

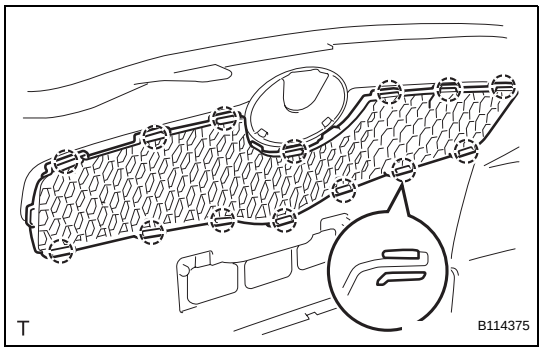

7. INSTALL RADIATOR GRILLE
(a) Engage the 14 claws and install the radiator grille.

8. INSTALL RADIATOR GRILLE EMBLEM (See page ET-72)

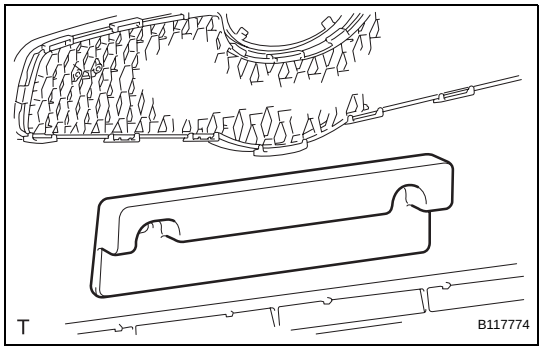

9. INSTALL FRONT BUMPER PAD
(a) Install the front bumper pad.

INSTALLATION

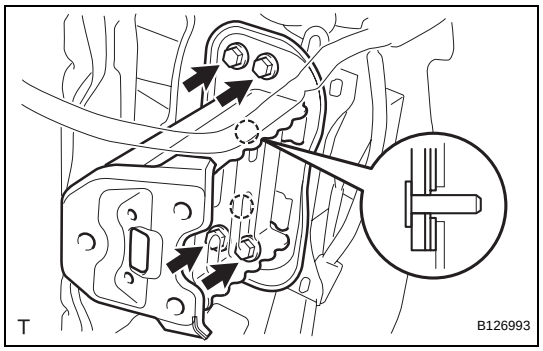

1. INSTALL FRONT BUMPER ARM SUB-ASSEMBLY LH

(a) Install the front bumper arm with the 4 bolts.
Torque: 40 N*m (410 kgf*cm, 30 ft.*lbf)

2. INSTALL FRONT BUMPER ARM SUB-ASSEMBLY RH

HINT:
Use the same procedure as for the LH side.

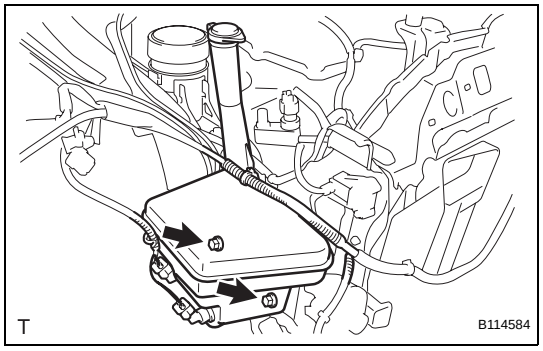

3. INSTALL WINDSHIELD WASHER JAR ASSEMBLY

(a) Install the windshield washer jar with the 2 bolts.
Torque: 5.5 N*m (55 kgf*cm, 49 in.*lbf)

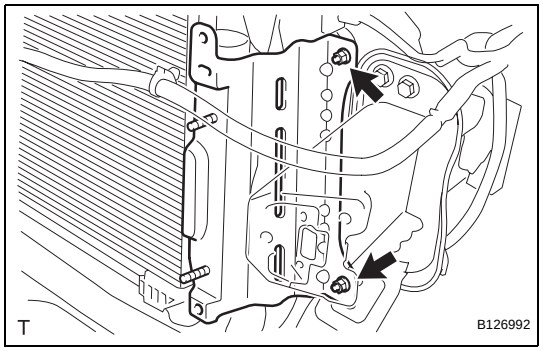

4. INSTALL FRONT BUMPER STONE DEFLECTOR BRACKET

HINT:
Use the same procedure for both sides.

(a) Install the front bumper stone deflector bracket with the 2 nuts.
Torque: 5.5 N*m (55 kgf*cm, 49 in.*lbf)

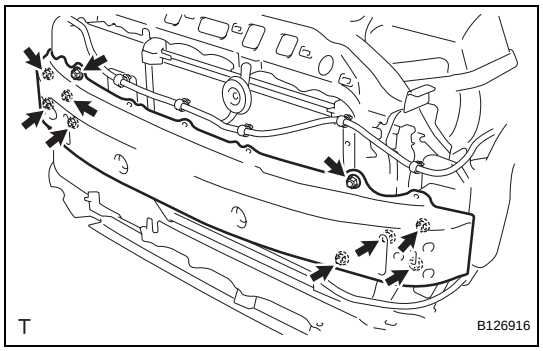

5. INSTALL FRONT BUMPER REINFORCEMENT SUB-ASSEMBLY

(a) Install the front bumper reinforcement with the 4 nuts and the 6 bolts.
Torque: 5.5 N*m (55 kgf*cm, 49 in.*lbf) for nut
40 N*m (410 kgf*cm, 30 ft.*lbf) for bolt

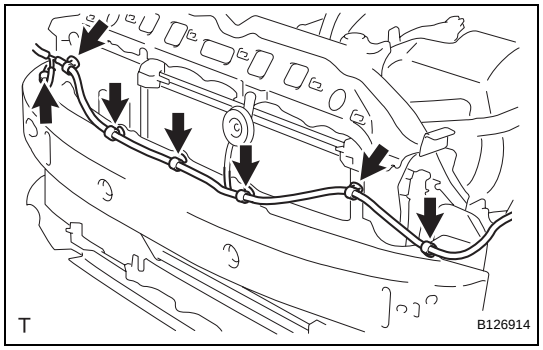

6. INSTALL NO. 2 ENGINE ROOM WIRE

(a) w/ Fog Light:
(1) Install the 7 wiring harness clamps.

ET

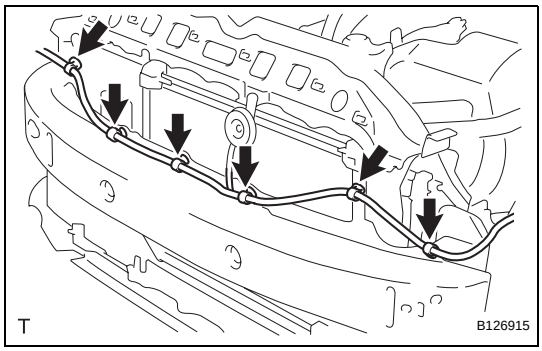

(b) w/o Fog Light:
(1) Install the 6 wiring harness clamps.

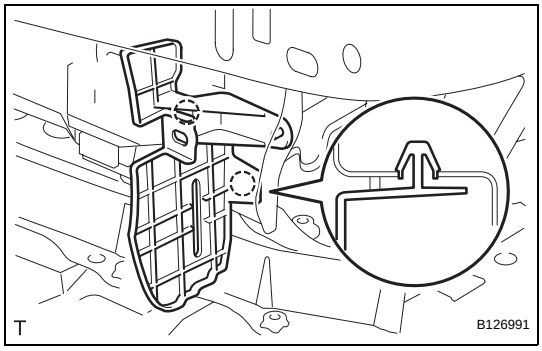

7. INSTALL RADIATOR SUPPORT EXTENSION LH
(a) Engage the 2 claws and install the radiator support extension.

8. INSTALL RADIATOR SUPPORT EXTENSION RH
HINT:
Use the same procedure as for the LH side.

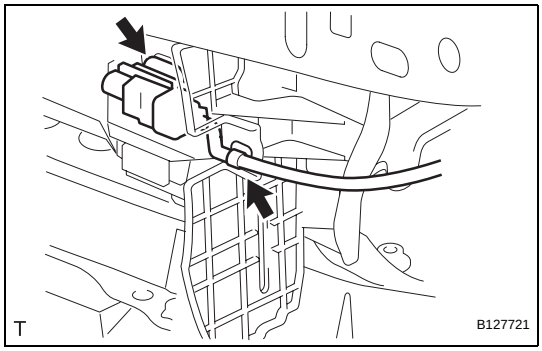

9. INSTALL THERMISTOR ASSEMBLY
(a) Install the thermistor.
(b) Install the wiring harness clamp.

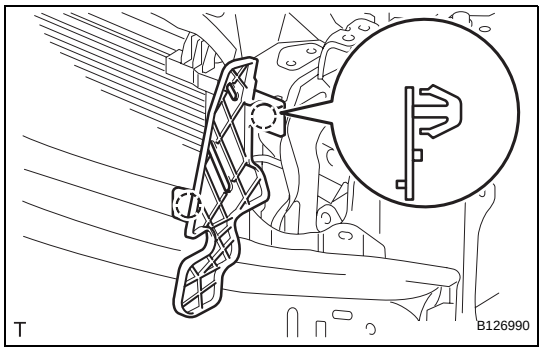

10. INSTALL RADIATOR SIDE AIR SEAL LH
(a) Engage the 2 claws and install the radiator side air seal.

11. INSTALL RADIATOR SIDE AIR SEAL RH
HINT:
Use the same procedure as for the LH side.

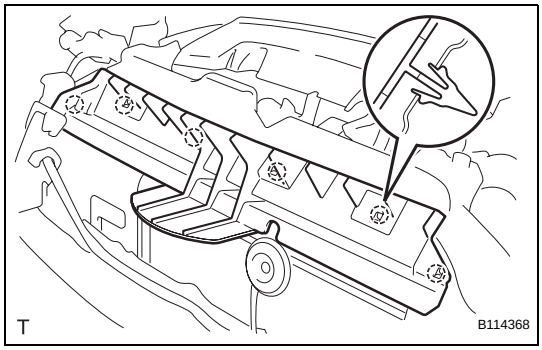

12. INSTALL RADIATOR SUPPORT UPPER ABSORBER
(a) Engage the 6 claws and install the radiator support upper absorber.

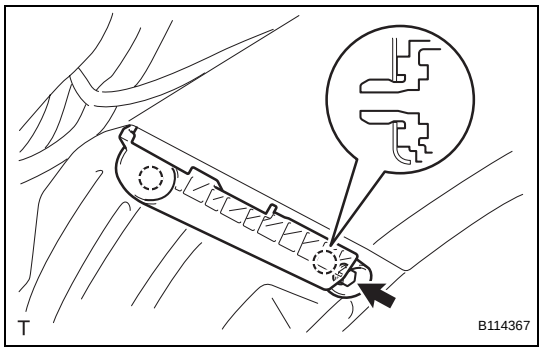

13. INSTALL FRONT BUMPER SIDE RETAINER LH
(a) Engage the 2 claws and install the front bumper side retainer.
(b) Tighten the screw.

14. INSTALL FRONT BUMPER SIDE RETAINER RH
HINT:
Use the same procedure as for the LH side.

15. INSTALL HEADLIGHT ASSEMBLY LH (See page LI-104)

16. INSTALL HEADLIGHT ASSEMBLY RH
HINT:
Use the same procedure as for the LH side.

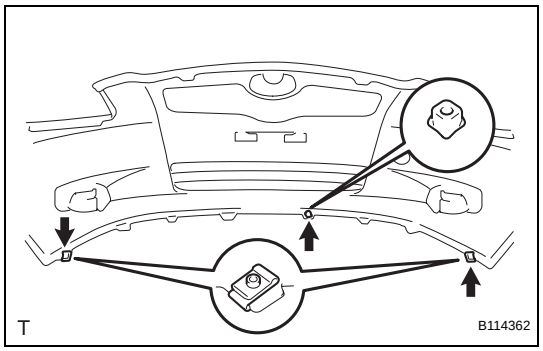

17. INSTALL FRONT BUMPER COVER
(a) Install the 2 clips and the screw grommet.

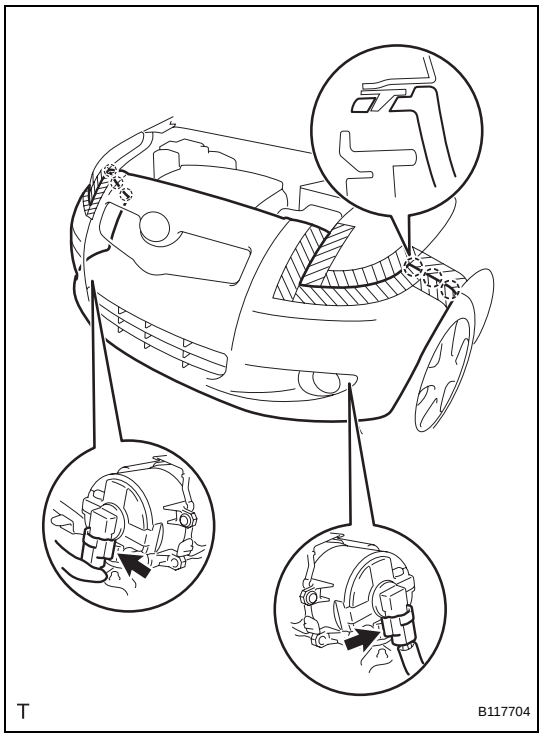

(b) w/ Fog Light:
(1) Connect the 2 fog light connectors.
(2) Engage the 6 claws and install the front bumper cover.

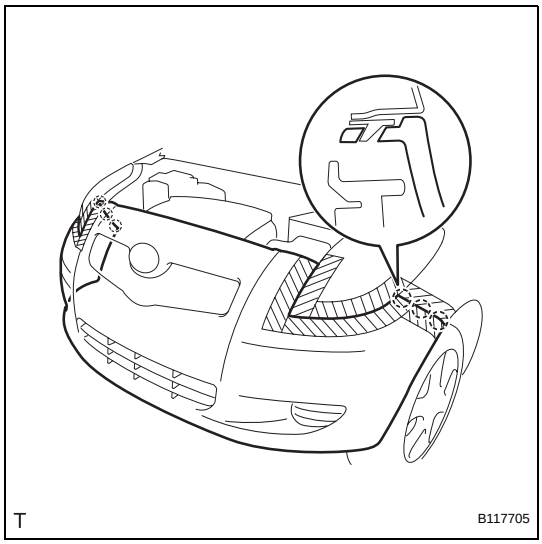

(c) w/o Fog Light:
  (1) Engage the 6 claws and install the front bumper cover.

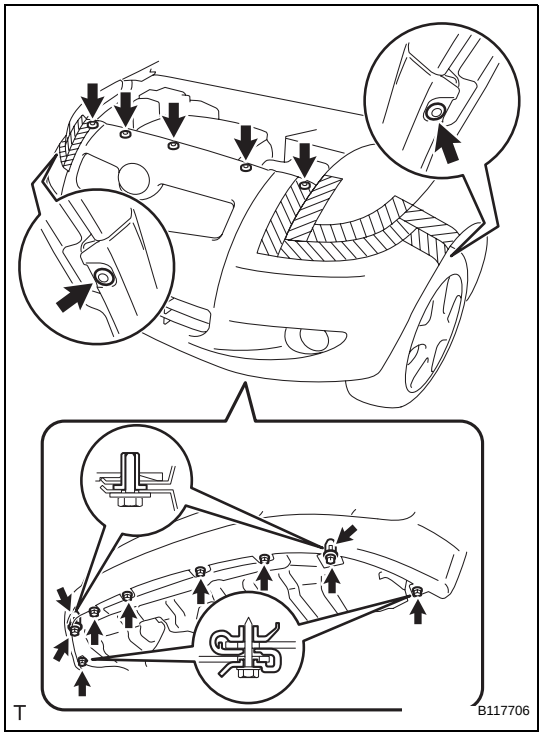

(d) Install the 7 clips.
(e) Install the 2 screw grommets.
(f) Tighten the 8 screws.

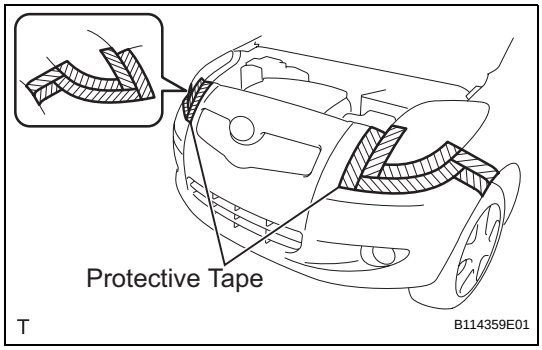

(g) Remove the protective tape.

18. CONNECT CABLE TO NEGATIVE BATTERY TERMINAL
Torque: 5.4 N*m (55 kgf*cm, 48 in.*lbf)

19. PREPARE VEHICLE FOR HEADLIGHT AIMING ADJUSTMENT (See page LI-98)

20. PREPARE FOR HEADLIGHT AIMING (for Using a Tester) (See page LI-98)

21. PREPARE FOR HEADLIGHT AIMING (for Using a Screen) (See page LI-99)

22. INSPECT HEADLIGHT AIMING (See page LI-101)

23. ADJUST HEADLIGHT AIMING (See page LI-102)

24. **PREPARE VEHICLE FOR FOG LIGHT AIMING ADJUSTMENT (w/ Fog Light) (See page LI-115)**
25. **PREPARE FOR FOG LIGHT AIMING (w/ Fog Light) (See page LI-116)**
26. **INSPECT FOG LIGHT AIMING (w/ Fog Light) (See page LI-118)**
27. **ADJUST FOG LIGHT AIMING (w/ Fog Light) (See page LI-118)**

REAR BUMPER (for Sedan)

COMPONENTS

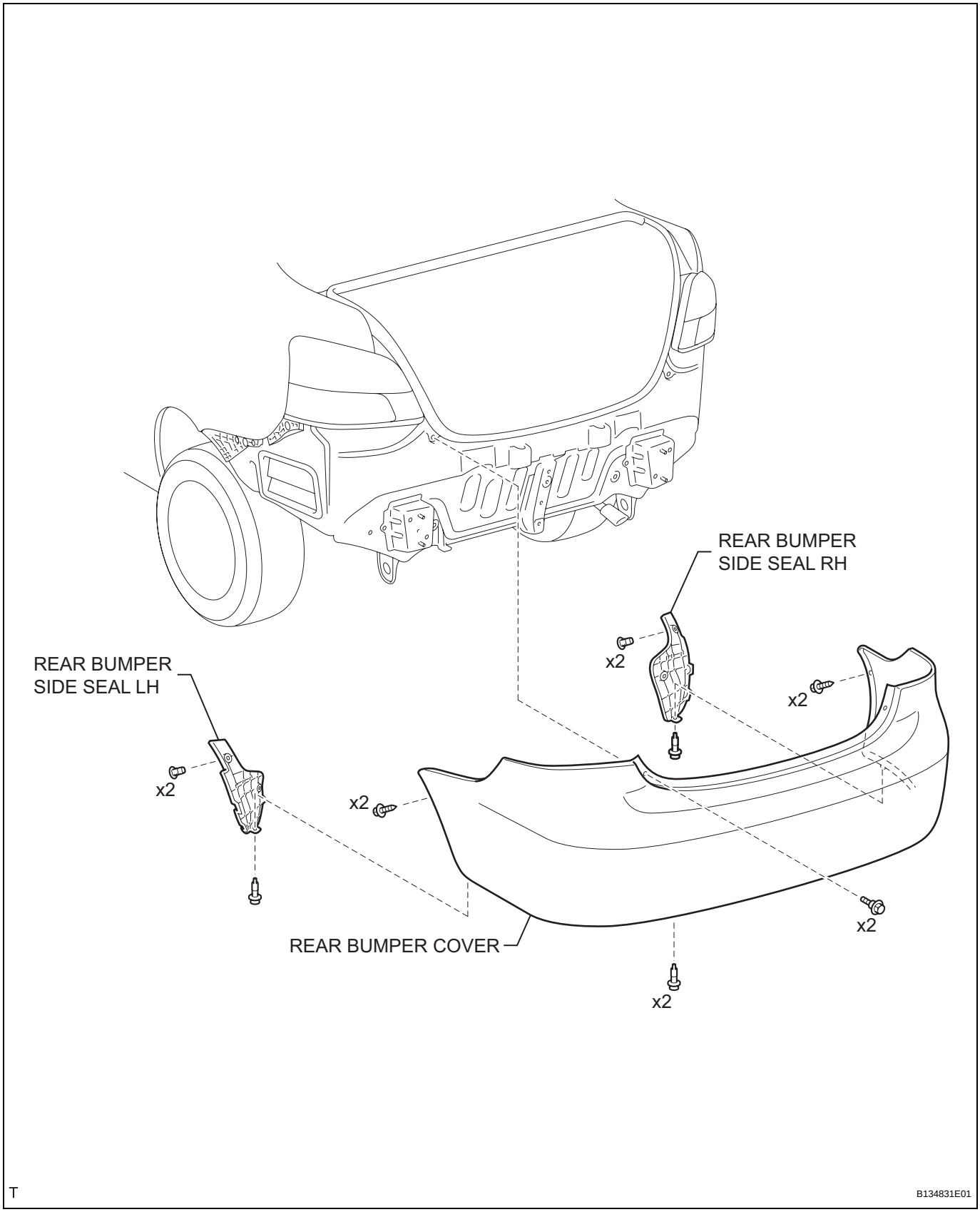

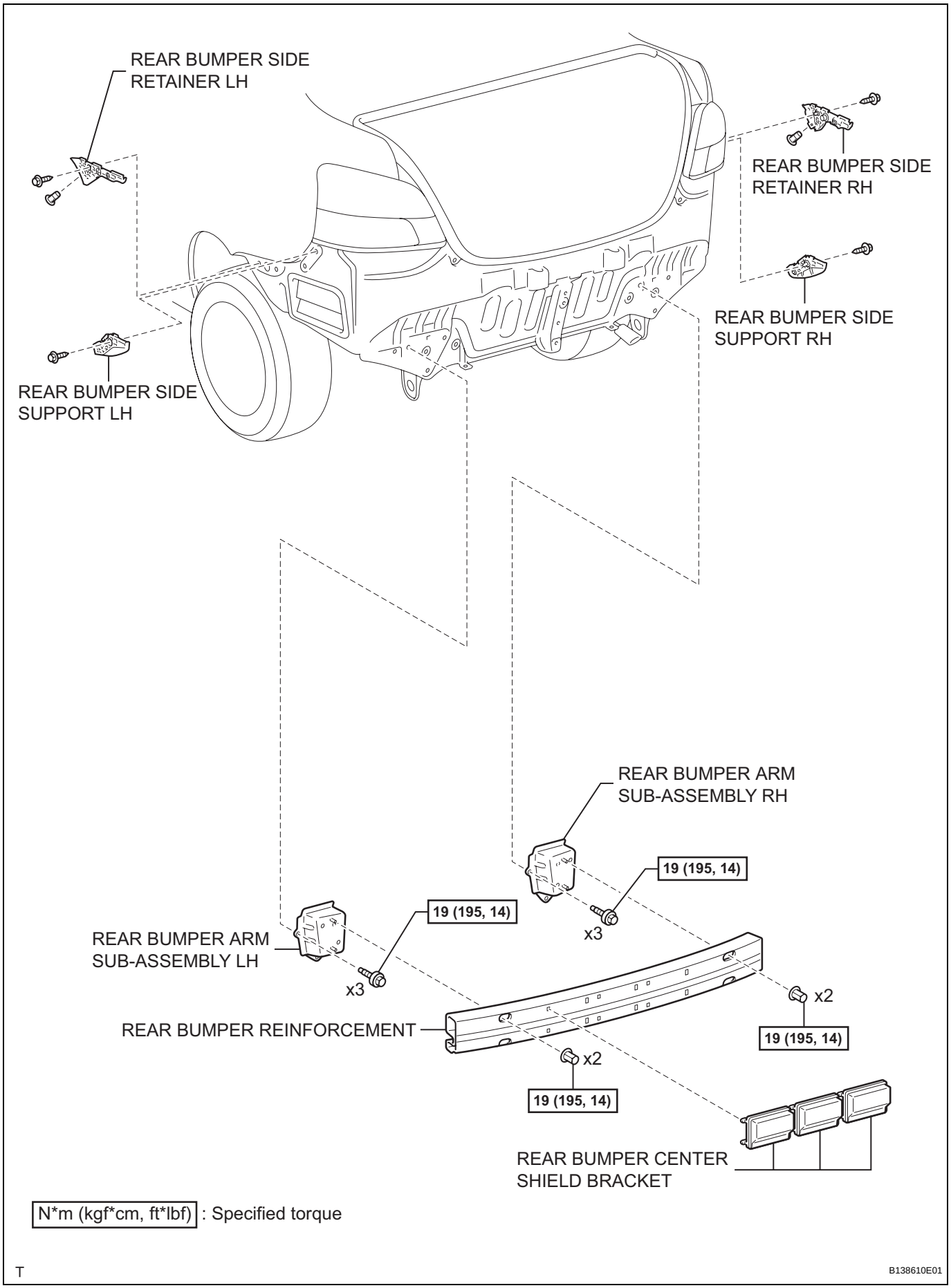
REAR BUMPER SIDE RETAINER LH
REAR BUMPER SIDE RETAINER RH
REAR BUMPER SIDE SUPPORT RH
REAR BUMPER SIDE SUPPORT LH
REAR BUMPER ARM SUB-ASSEMBLY RH
19 (195, 14)
x3
19 (195, 14)
REAR BUMPER ARM SUB-ASSEMBLY LH
x3
x2
REAR BUMPER REINFORCEMENT
19 (195, 14)
x2
19 (195, 14)
REAR BUMPER CENTER SHIELD BRACKET
N*m (kgf*cm, ft*lbf) : Specified torque
T
B138610E01

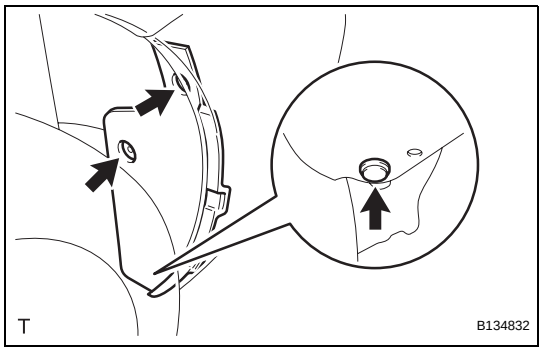

REMOVAL

1. REMOVE REAR BUMPER SIDE SEAL LH

(a) Using a clip remover, remove the 3 clips and the rear bumper side seal.

2. REMOVE REAR BUMPER SIDE SEAL RH

HINT:
Use the same procedure as for the LH side.

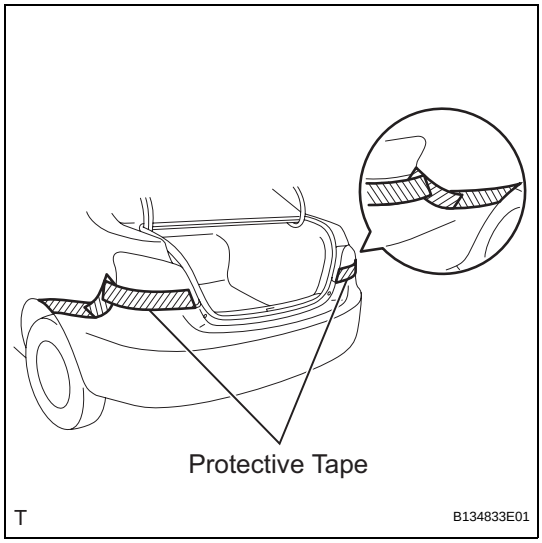

3. REMOVE REAR BUMPER COVER

(a) Apply protective tape as shown in the illustration.

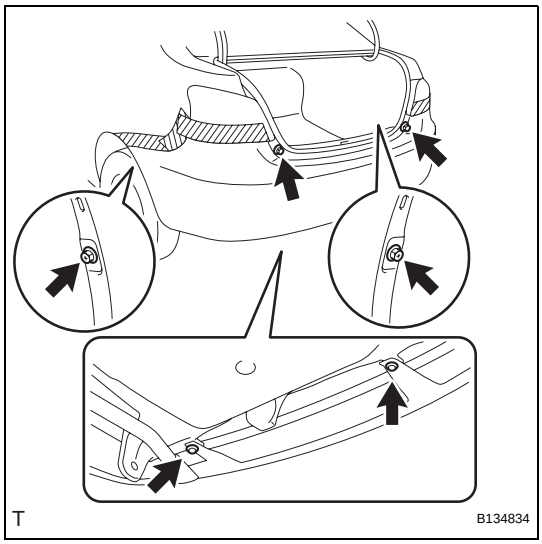

(b) Using a clip remover, remove the 2 clips.
(c) Remove the 2 bolts and the 2 screws.

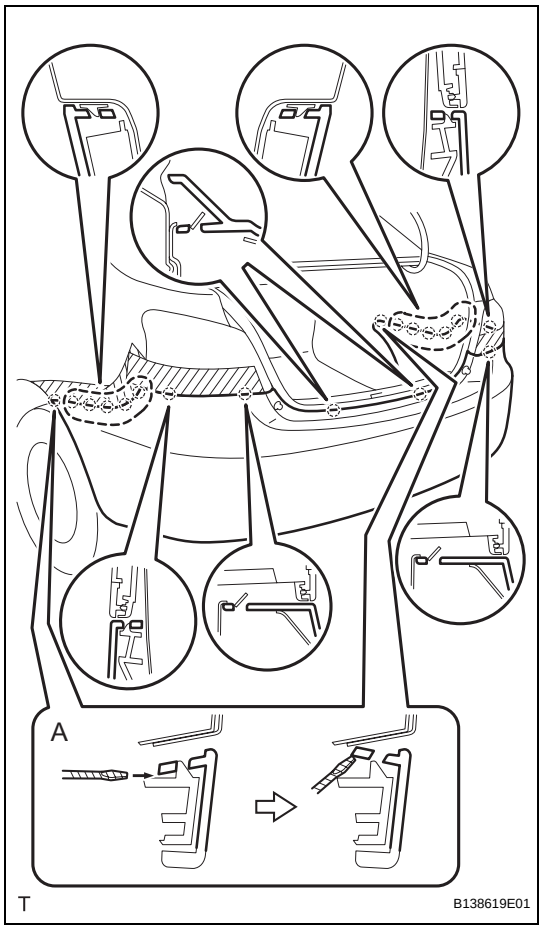

(d) Insert a screwdriver into portion A shown in the illustration, then lift the rear bumper cover up using it and disengage the 2 claws.
(e) Disengage the 16 claws and remove the rear bumper cover.

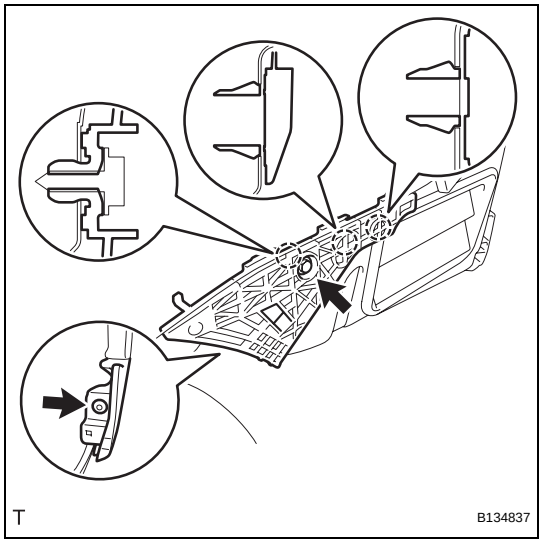

4. REMOVE REAR BUMPER SIDE RETAINER LH
(a) Using a clip remover, remove the clip.
(b) Remove the screw.
(c) Disengage the 3 claws and remove the rear bumper side retainer.

5. REMOVE REAR BUMPER SIDE RETAINER RH
HINT:
Use the same procedure as for the LH side.

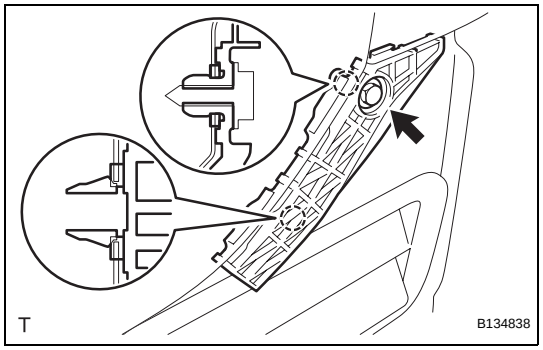

6. REMOVE REAR BUMPER SIDE SUPPORT LH
(a) Remove the screw.
(b) Disengage the 2 claws and remove the rear bumper side support.

7. REMOVE REAR BUMPER SIDE SUPPORT RH
HINT:
Use the same procedure as for the LH side.

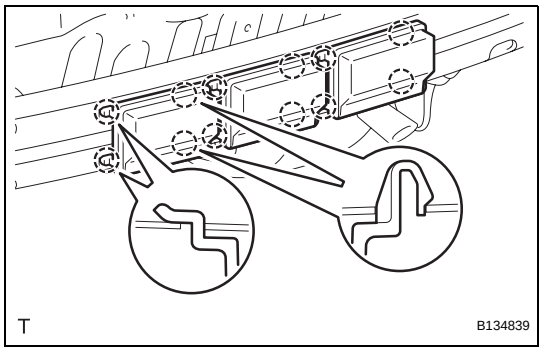

8. REMOVE REAR BUMPER CENTER SHIELD BRACKET

HINT:
Use the same procedure to remove all the rear bumper center shield brackets.

(a) Disengage the 4 claws and remove the rear bumper center shield bracket.

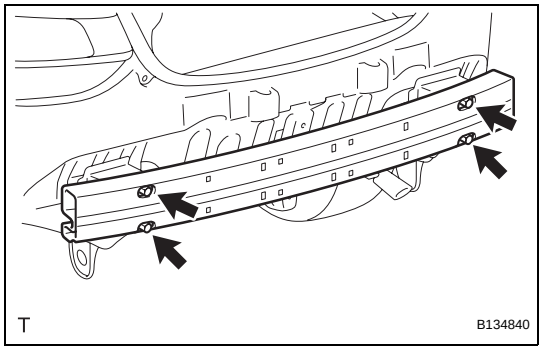

9. REMOVE REAR BUMPER REINFORCEMENT

(a) Remove the 4 nuts and rear bumper reinforcement.

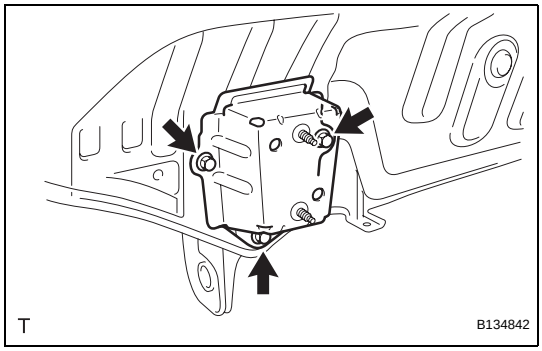

10. REMOVE REAR BUMPER ARM SUB-ASSEMBLY LH

(a) Remove the 3 bolts and the rear bumper arm.

11. REMOVE REAR BUMPER ARM SUB-ASSEMBLY RH

HINT:
Use the same procedure as for the LH side.

INSTALLATION

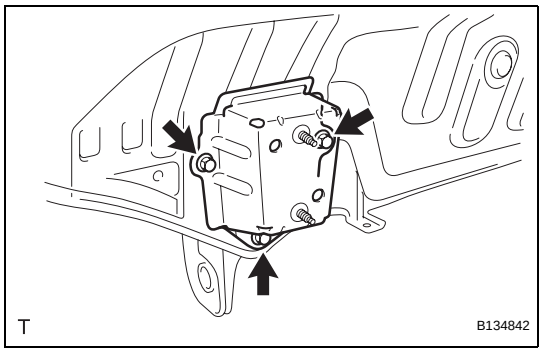

1. INSTALL REAR BUMPER ARM SUB-ASSEMBLY LH

(a) Install the rear bumper arm with the 3 bolts.
Torque: 19 N*m (195 kgf*cm, 14 ft.*lbf)

2. INSTALL REAR BUMPER ARM SUB-ASSEMBLY RH

HINT:
Use the same procedure as for the LH side.

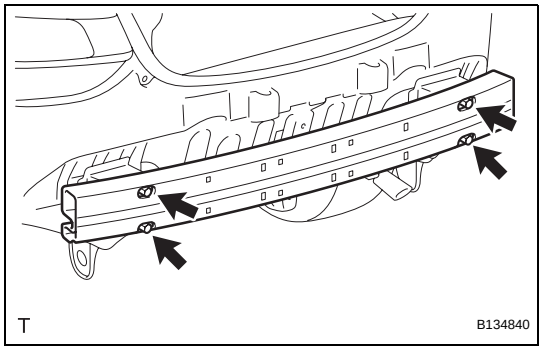

3. INSTALL REAR BUMPER REINFORCEMENT

(a) Install the rear bumper reinforcement with the 4 nuts.
Torque: 19 N*m (195 kgf*cm, 14 ft.*lbf)

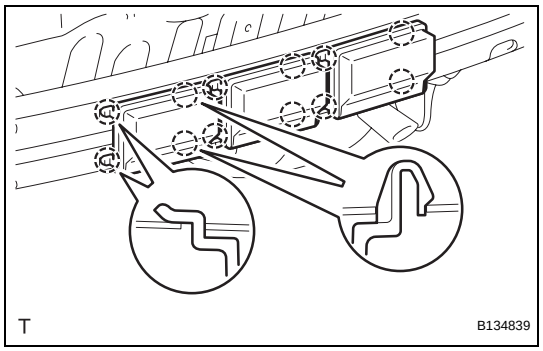

4. INSTALL REAR BUMPER CENTER SHIELD BRACKET

HINT:

Use the same procedure to install all the rear bumper center shield brackets.

(a) Engage the 4 claws and install the rear bumper center shield bracket.

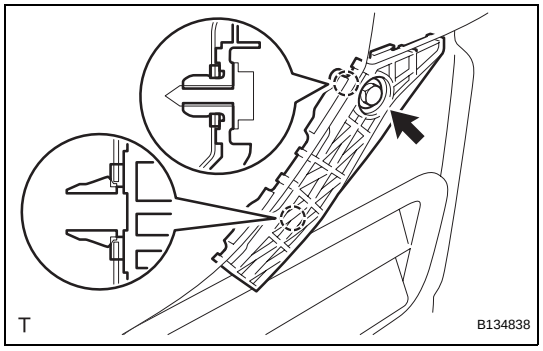

5. INSTALL REAR BUMPER SIDE SUPPORT LH

(a) Engage the 2 claws and install the rear bumper side support.

(b) Tighten the screw.

6. INSTALL REAR BUMPER SIDE SUPPORT RH

HINT:

Use the same procedure as for the LH side.

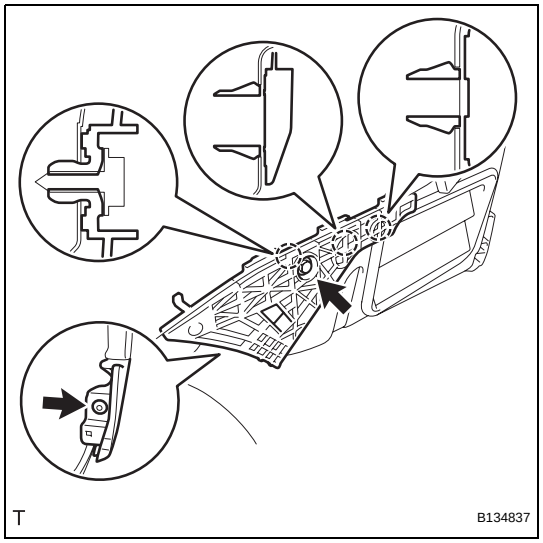

7. INSTALL REAR BUMPER SIDE RETAINER LH

(a) Engage the 3 claws and install the rear bumper side retainer.

(b) Tighten the screw.

(c) Install the clip.

8. INSTALL REAR BUMPER SIDE RETAINER RH

HINT:

Use the same procedure as for the LH side.

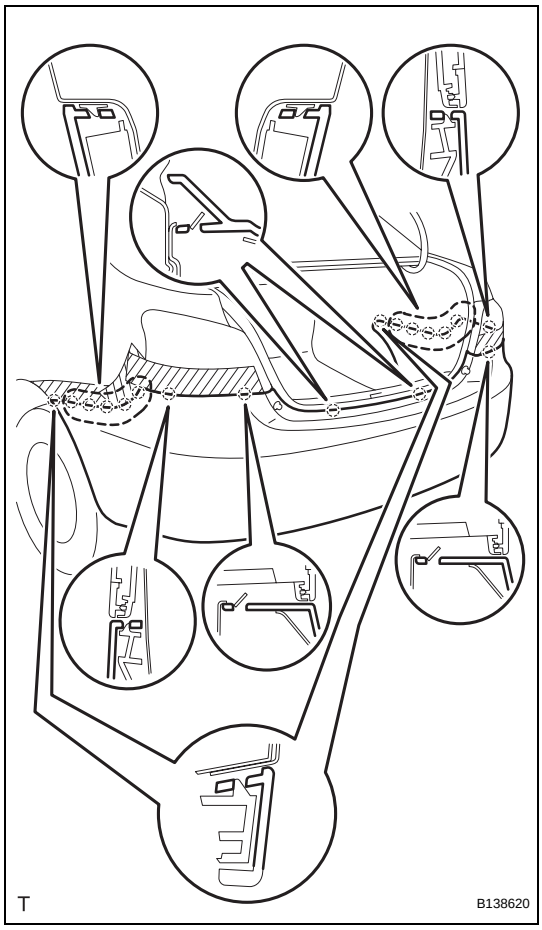

9. INSTALL REAR BUMPER COVER

(a) Engage the 18 claws and install the rear bumper cover.

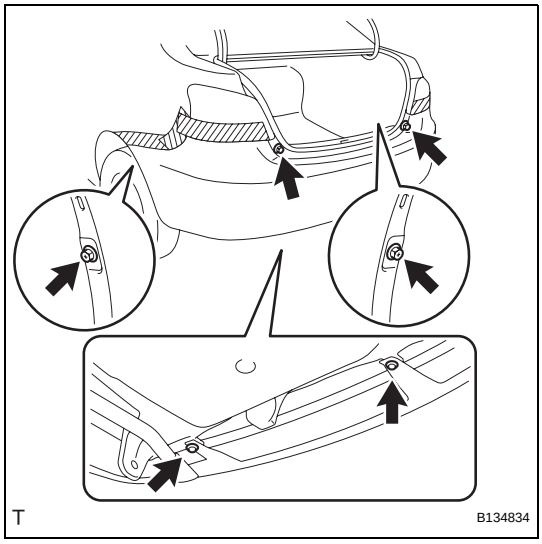

(b) Tighten the 2 bolts and the 2 screws.

(c) Install the 2 clips.

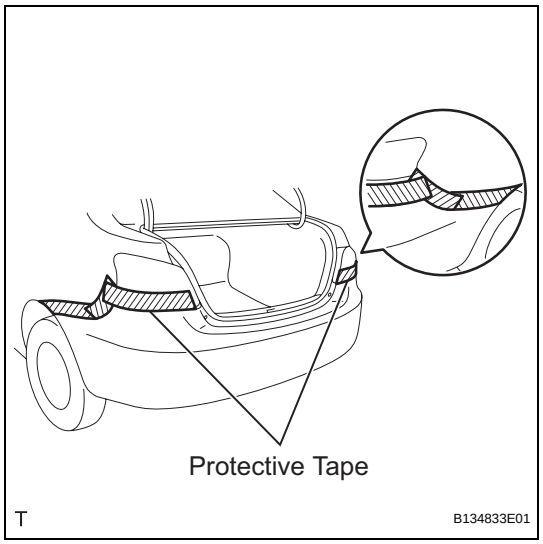

(d) Remove the protective tape.

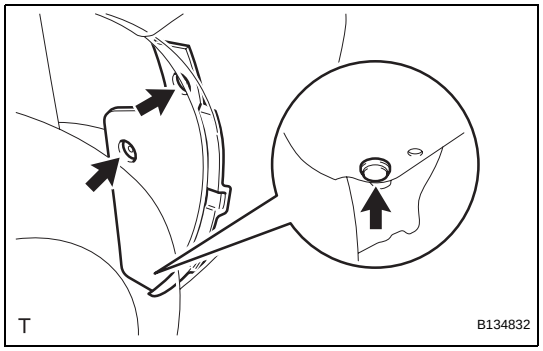

10. INSTALL REAR BUMPER SIDE SEAL LH

(a) Install the rear bumper side seal with the 3 clips.

11. INSTALL REAR BUMPER SIDE SEAL RH

HINT:
Use the same procedure as for the LH side.

REAR BUMPER (for Hatchback)

COMPONENTS

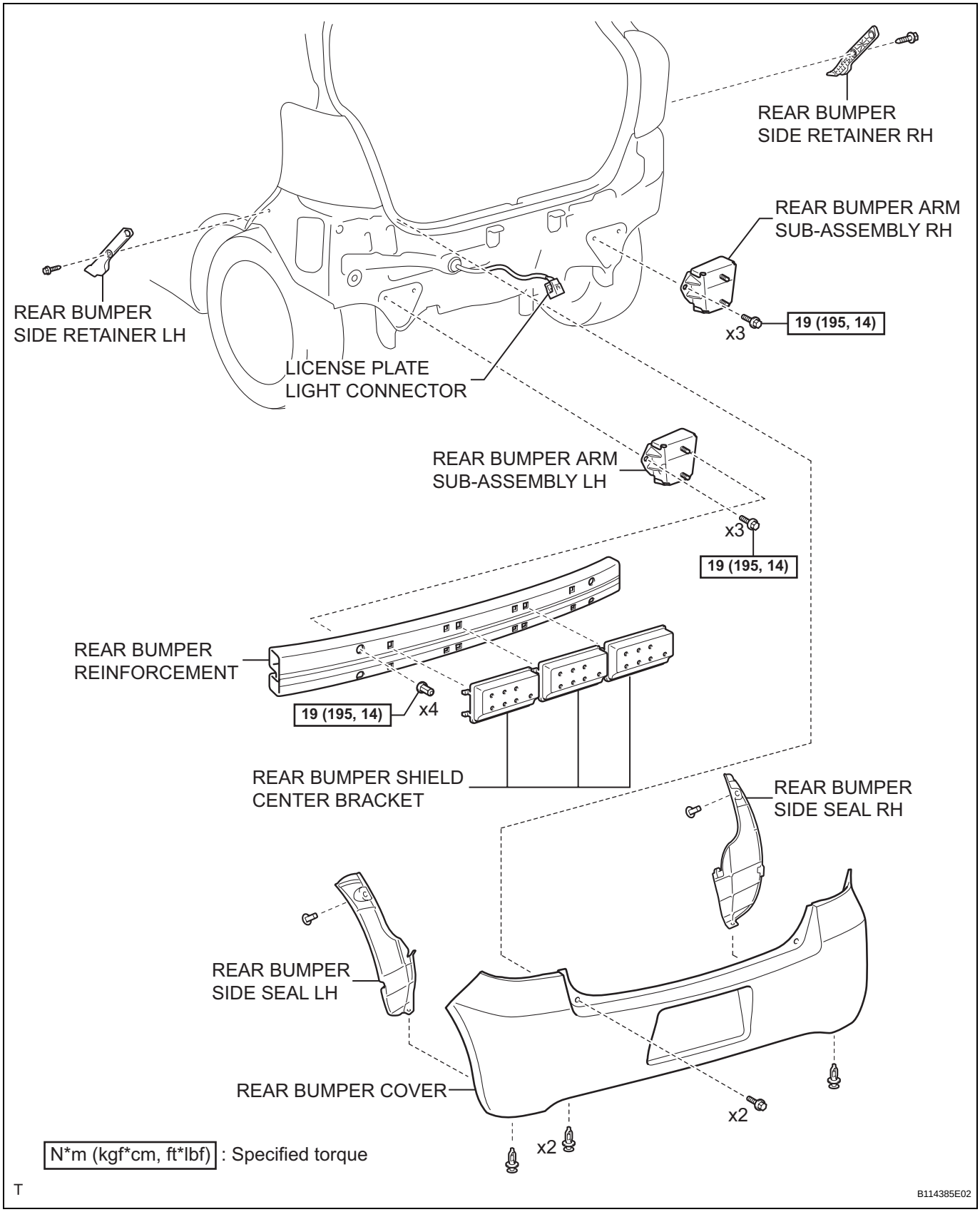

ET

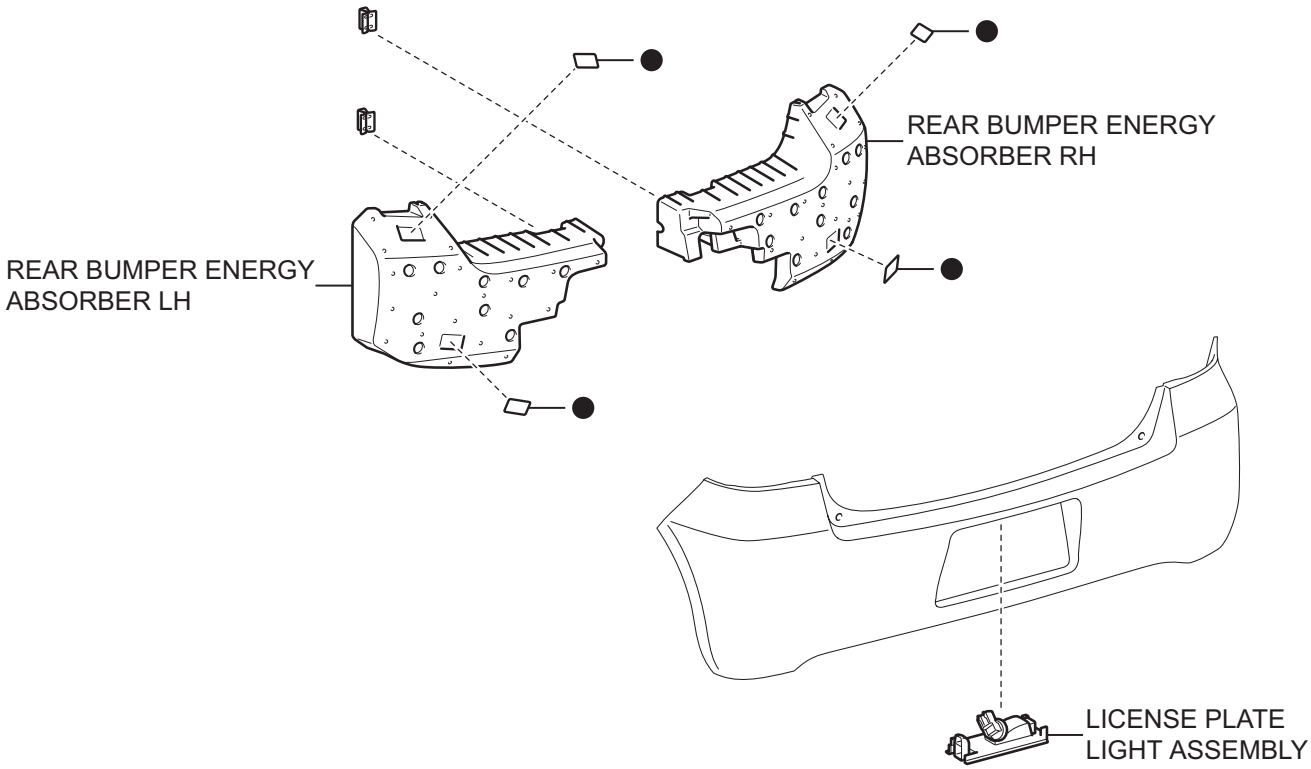

● Non-reusable part

T

B119895E02

REMOVAL

1. DISCONNECT CABLE FROM NEGATIVE BATTERY TERMINAL

2. REMOVE REAR BUMPER SIDE SEAL LH

(a) Using a clip remover, remove the 2 clips and the rear bumper side seal.

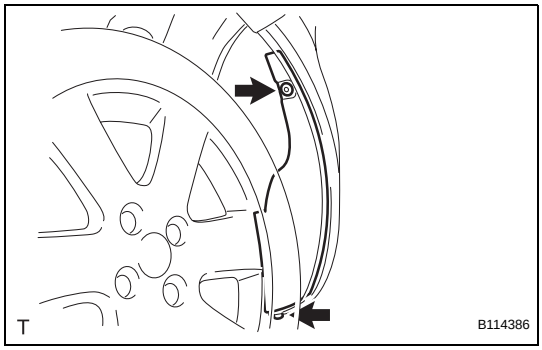

3. REMOVE REAR BUMPER SIDE SEAL RH

HINT:
Use the same procedure as for the LH side.

4. REMOVE REAR BUMPER COVER

(a) Apply protective tape as shown in the illustration.

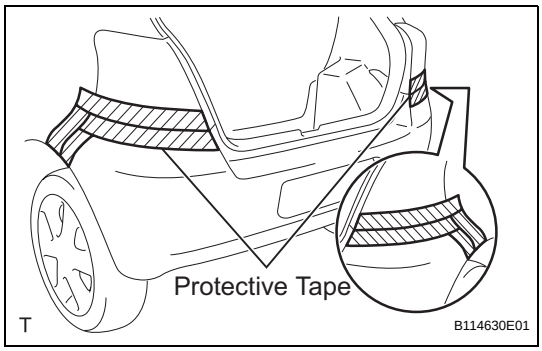

(b) Using a clip remover, remove the 2 clips.
(c) Remove the 2 bolts.

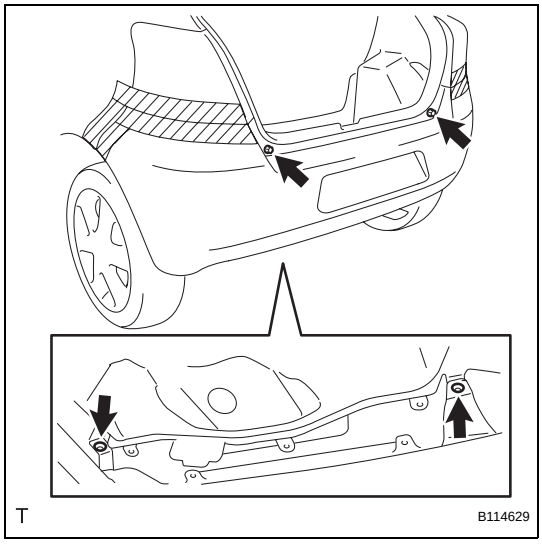

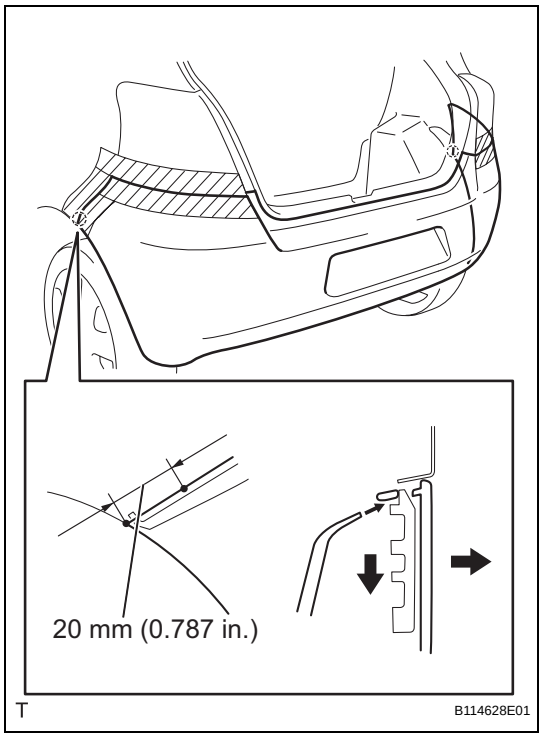

(d) Insert a clip remover into the engaged portion between the rear bumper and rear bumper side retainer, 20 mm (0.787 in.) from the end of the rear bumper arch.

(e) Pull the rear bumper outward while pushing the rear bumper side retainer downward.

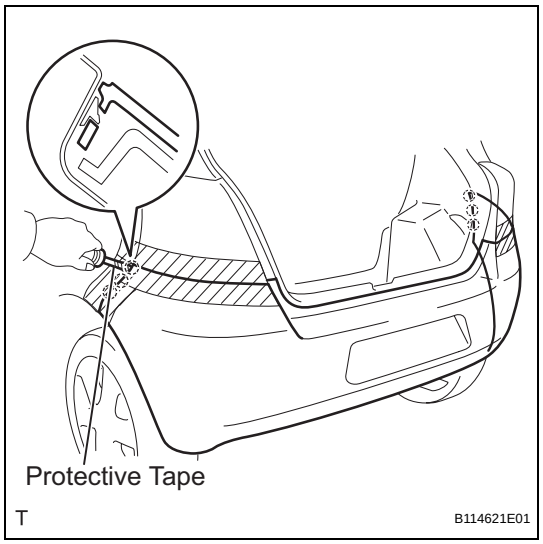

(f) Using a screwdriver with its tip wrapped in protective tape, disengage the 6 claws.

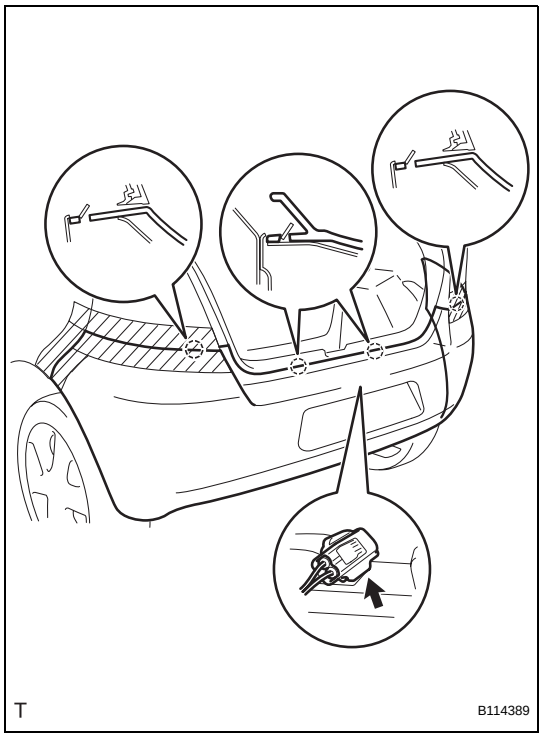

(g) Disengage the 4 claws.
(h) Disconnect the license plate light connector and remove the rear bumper cover.

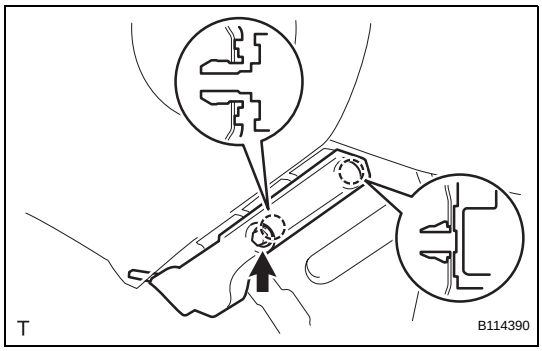

5. REMOVE REAR BUMPER SIDE RETAINER LH
(a) Remove the screw.
(b) Using a clip remover, disengage the 2 claws and remove the rear bumper side retainer.

6. REMOVE REAR BUMPER SIDE RETAINER RH
HINT:
Use the same procedure as for the LH side.

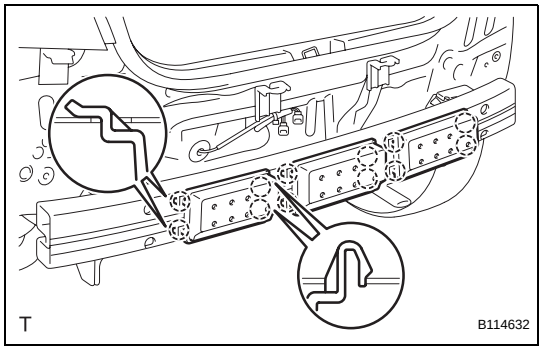

7. REMOVE REAR BUMPER SHIELD CENTER BRACKET
HINT:
Use the same procedure to remove all the rear bumper shield center brackets.
(a) Disengage the 4 claws and the rear bumper shield center bracket.

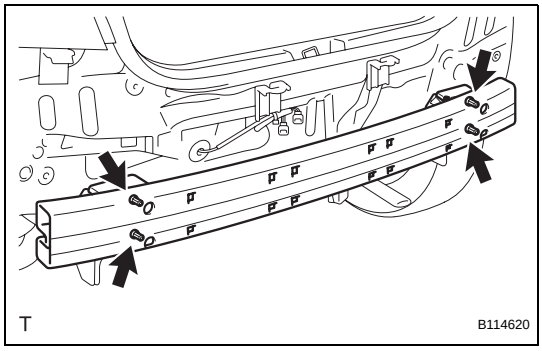

8. REMOVE REAR BUMPER REINFORCEMENT
(a) Remove the 4 nuts and the rear bumper reinforcement.

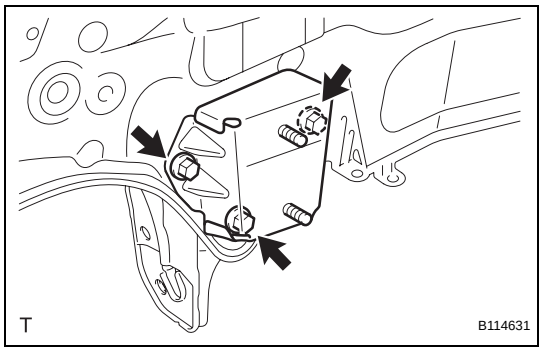

9. REMOVE REAR BUMPER ARM SUB-ASSEMBLY LH
(a) Remove the 3 bolts and the rear bumper arm.

10. REMOVE REAR BUMPER ARM SUB-ASSEMBLY RH
HINT:
Use the same procedure as for the LH side.

DISASSEMBLY

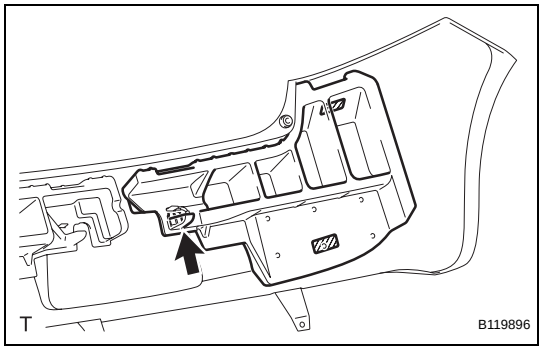

1. REMOVE REAR BUMPER ENERGY ABSORBER LH
(a) Remove the clip.
(b) Remove the 2 pieces of tape and the rear bumper energy absorber.

2. REMOVE REAR BUMPER ENERGY ABSORBER RH
HINT:
Use the same procedure as for the LH side.

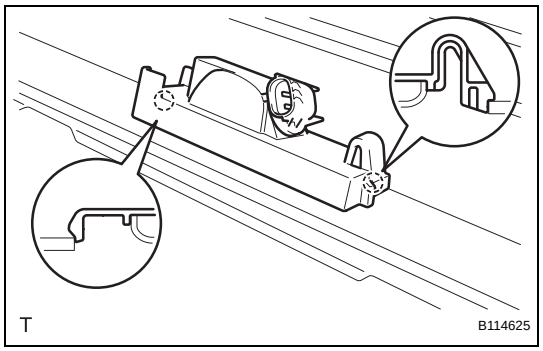

3. REMOVE LICENSE PLATE LIGHT ASSEMBLY
(a) Disengage the 2 claws and remove the license plate light.

REASSEMBLY

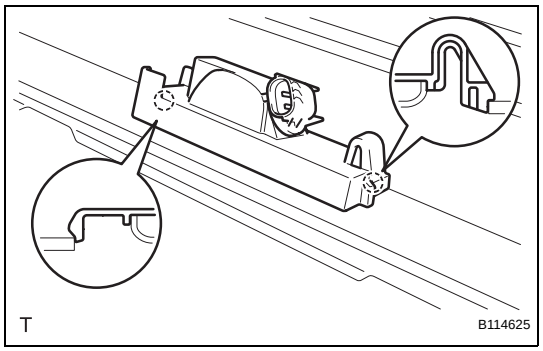

1. INSTALL LICENSE PLATE LIGHT ASSEMBLY
(a) Engage the 2 claws and install the license plate light.

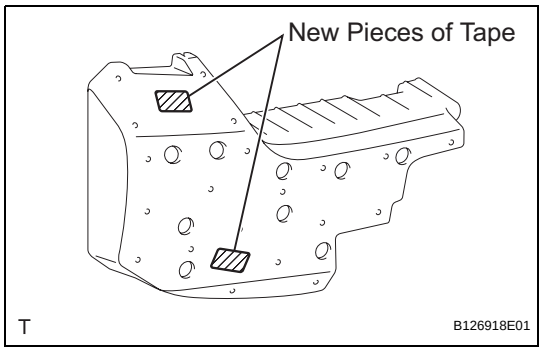

2. INSTALL REAR BUMPER ENERGY ABSORBER LH
(a) Apply 2 new pieces of tape.

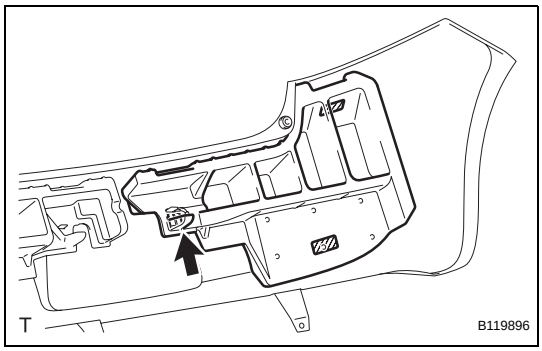

(b) Install the rear bumper energy absorber with the clip.

3. INSTALL REAR BUMPER ENERGY ABSORBER RH
HINT:
Use the same procedure as for the LH side.

INSTALLATION

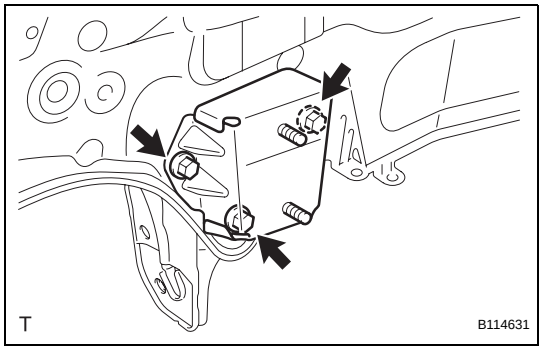

1. INSTALL REAR BUMPER ARM SUB-ASSEMBLY LH
(a) Install the rear bumper arm with the 3 bolts.
Torque: 19 N*m (195 kgf*cm, 14 ft.*lbf)

2. INSTALL REAR BUMPER ARM SUB-ASSEMBLY RH
HINT:
Use the same procedure as for the LH side.

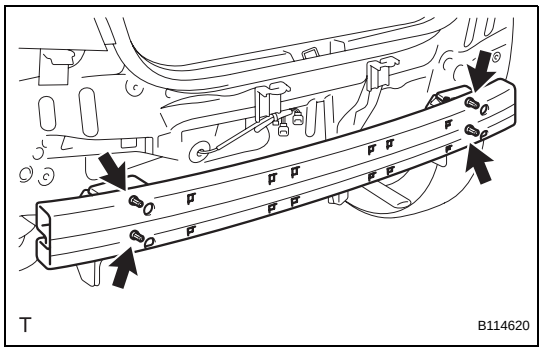

3. INSTALL REAR BUMPER REINFORCEMENT
(a) Install the rear bumper reinforcement with the 4 nuts.
Torque: 19 N*m (195 kgf*cm, 14 ft.*lbf)

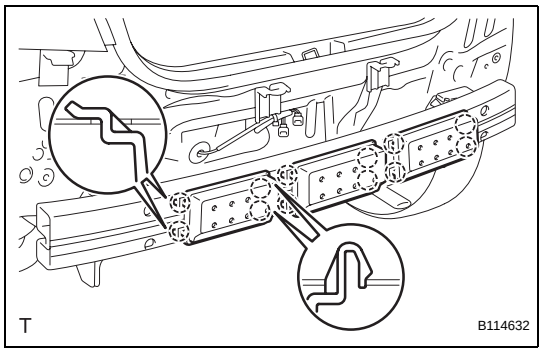

4. INSTALL REAR BUMPER SHIELD CENTER BRACKET
HINT:
Use the same procedure to install all the rear bumper shield center brackets.
(a) Engage the 4 claws and install the rear bumper shield center bracket.

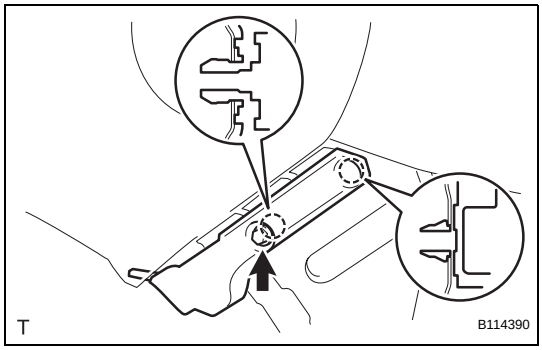

5. INSTALL REAR BUMPER SIDE RETAINER LH
(a) Engage the 2 claws and install the rear bumper side retainer.
(b) Tighten the screw.

6. INSTALL REAR BUMPER SIDE RETAINER RH
HINT:
Use the same procedure as for the LH side.

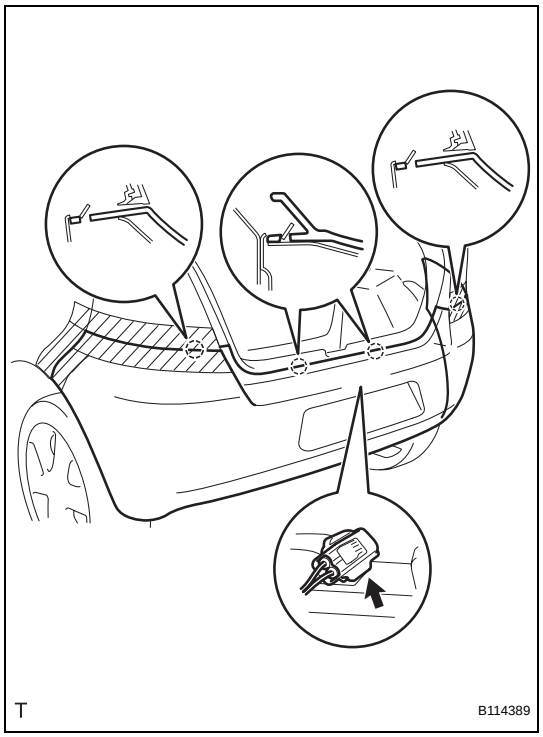

7. INSTALL REAR BUMPER COVER

(a) Connect the license plate light connector.

(b) Engage the 4 claws and install the rear bumper.

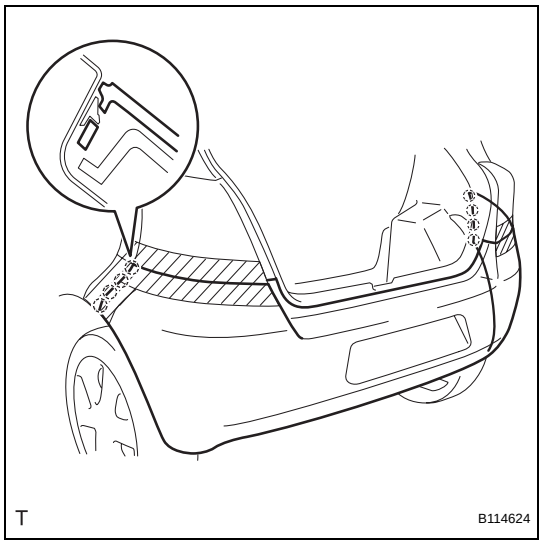

(c) Engage the 8 claws.

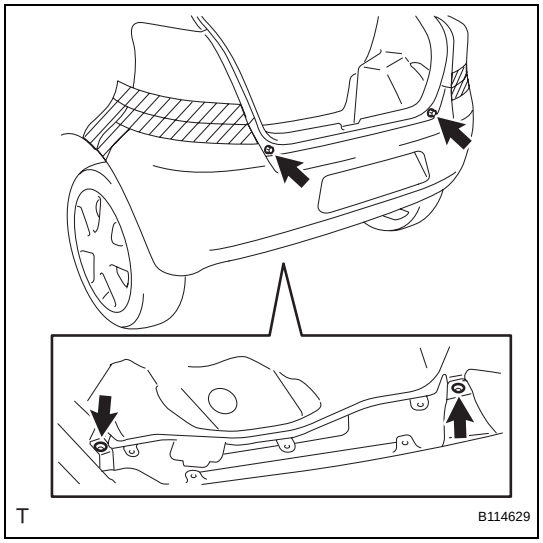

(d) Tighten the 2 bolts.

(e) Install the 2 clips.

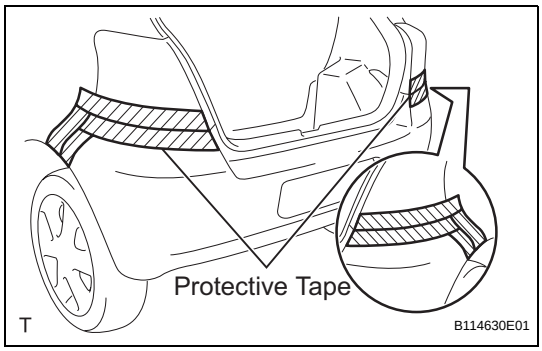

(f) Remove the protective tape.

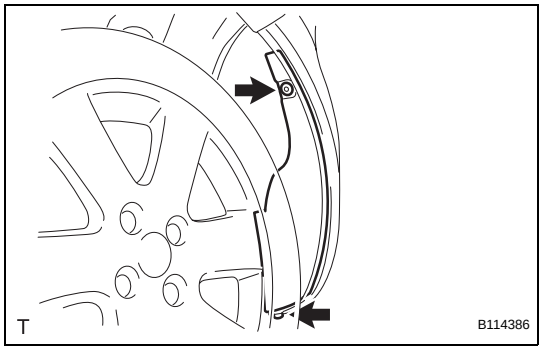

8. INSTALL REAR BUMPER SIDE SEAL LH

(a) Install the rear bumper side seal with the 2 clips.

9. INSTALL REAR BUMPER SIDE SEAL RH

HINT:
Use the same procedure as for the LH side.

10. CONNECT CABLE TO NEGATIVE BATTERY TERMINAL

Torque: 5.4 N*m (55 kgf*cm, 48 in.*lbf)

NAME PLATE (for Sedan)

COMPONENTS

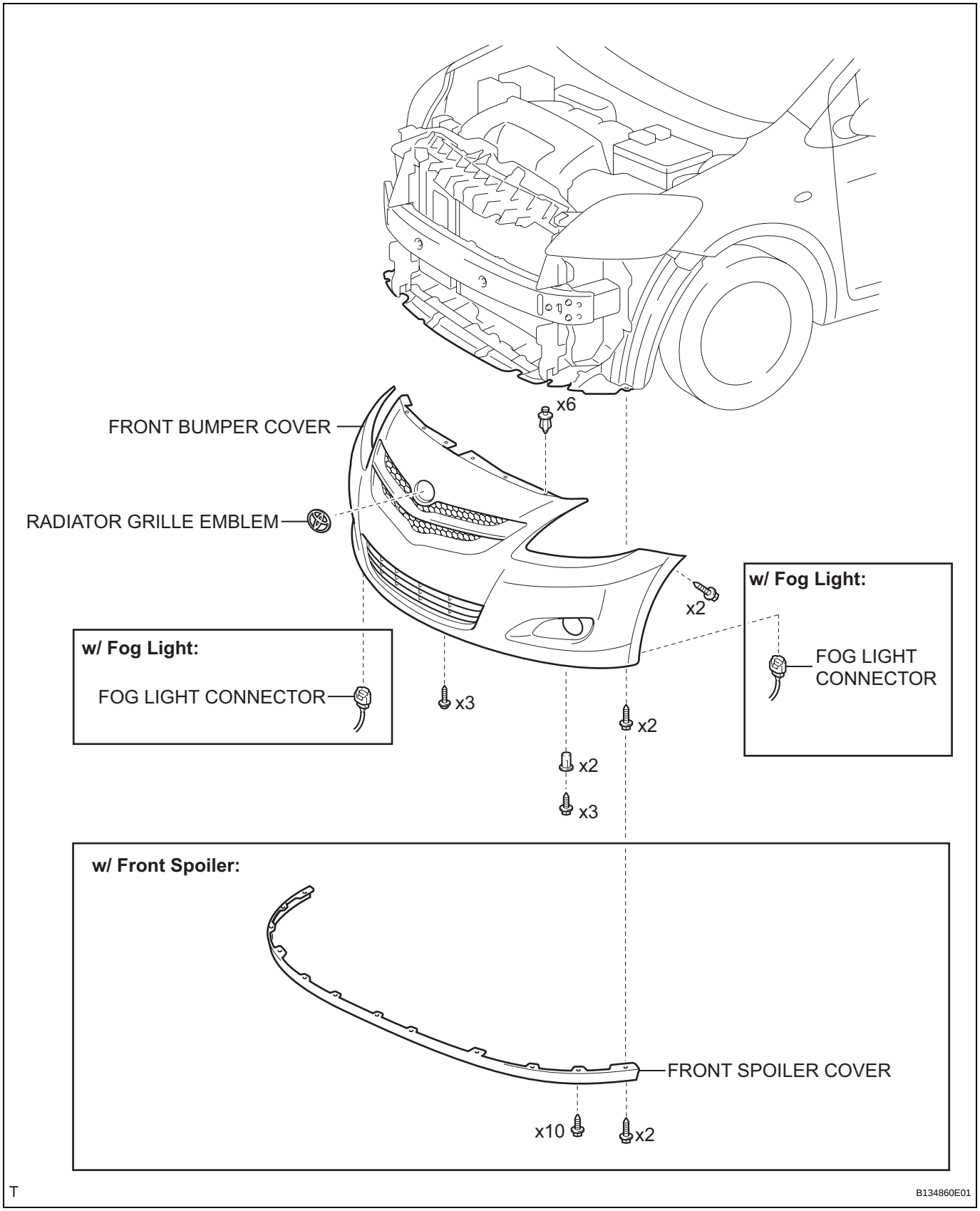

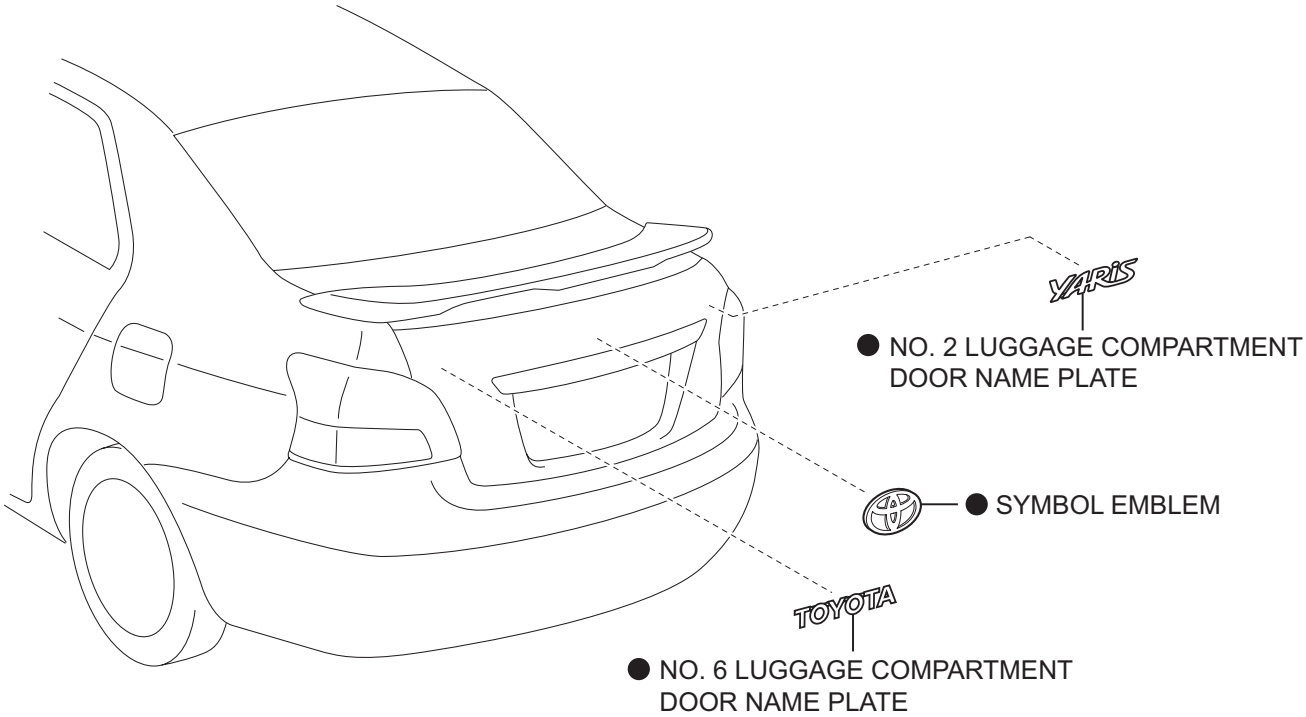

● Non-reusable part

T

B134861E01

REMOVAL

1. DISCONNECT CABLE FROM NEGATIVE BATTERY TERMINAL (w/ Fog Light)

2. REMOVE FRONT SPOILER COVER (w/ Front Spoiler) (See page ET-6)

3. REMOVE FRONT BUMPER COVER

(a) Apply protective tape, as shown in the illustration.

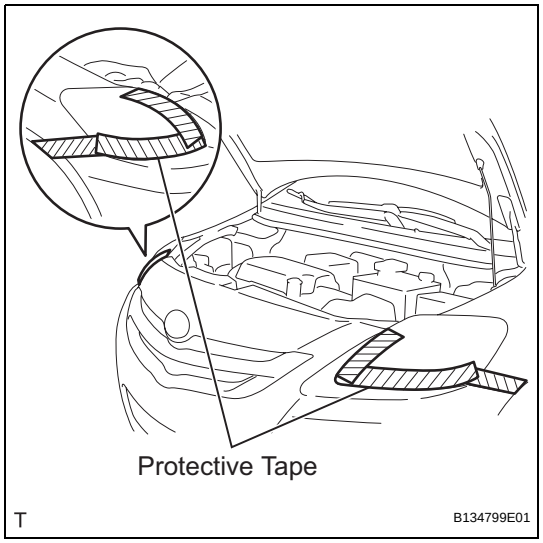

(b) w/ Front Spoiler:

(1) Remove the 5 screws and the 3 bolts.

(2) Remove the 2 screw grommets.

(3) Remove the 6 clips.

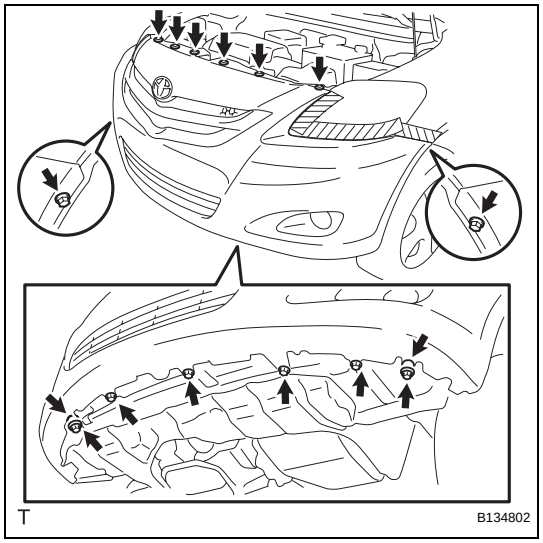

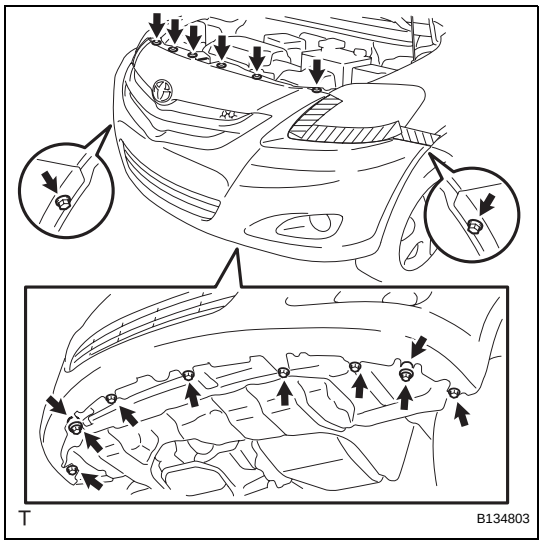

(c) w/o Front Spoiler:
  (1) Remove the 7 screws and the 3 bolts.
  (2) Remove the 2 screw grommets.
  (3) Remove the 6 clips.

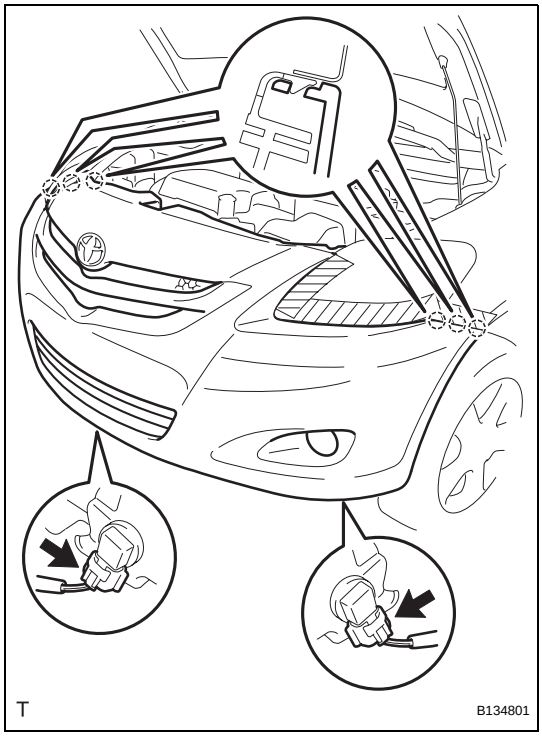

(d) w/ Fog Light:
  (1) Disengage the 6 claws and remove the front bumper cover.
  (2) Disconnect the 2 fog light connectors.

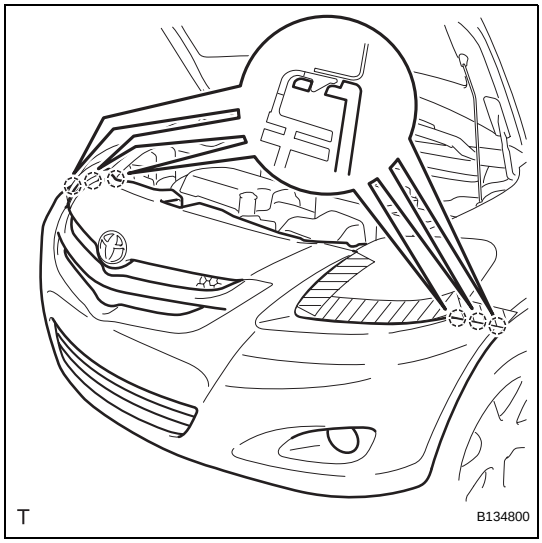

(e) w/o Fog Light:
  (1) Disengage the 6 claws and remove the front bumper cover.

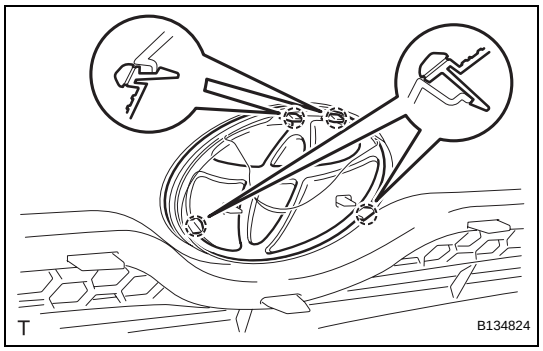

4. REMOVE RADIATOR GRILLE EMBLEM

(a) Disengage the 4 claws and remove the radiator grille emblem.

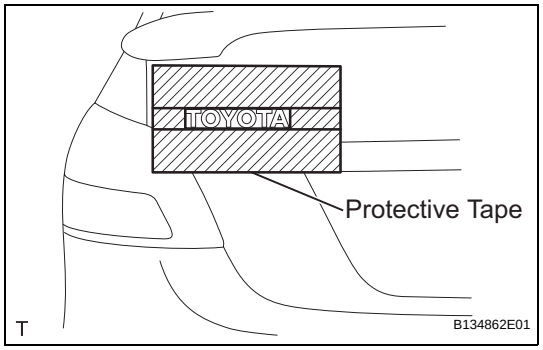

5. REMOVE NO. 6 LUGGAGE COMPARTMENT DOOR NAME PLATE

(a) Apply protective tape, as shown in the illustration.

(b) Using an infrared light, heat the No. 6 luggage compartment door name plate.

CAUTION:

Do not burn yourself with the heated luggage compartment door panel or infrared light.

HINT:

Heat at 40 to 60°C (104 to 140°F) for 1 to 2 minutes.

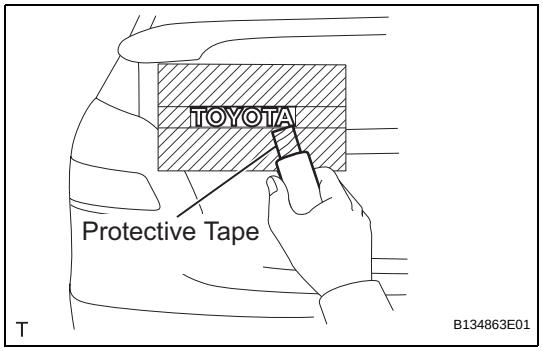

(c) Using a gasket scraper with its tip wrapped in protective tape, gradually peel the adhesive surface and remove the No. 6 luggage compartment door name plate.

(d) Remove the protective tape.

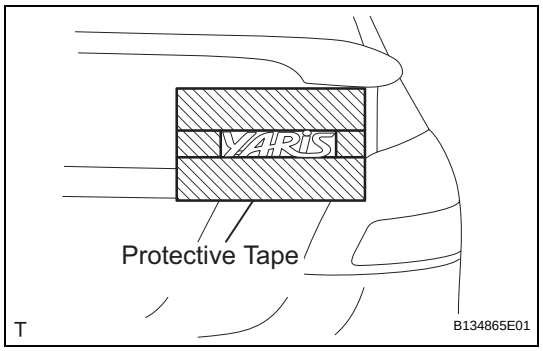

6. REMOVE NO. 2 LUGGAGE COMPARTMENT DOOR NAME PLATE

(a) Apply protective tape, as shown in the illustration.

(b) Using an infrared light, heat the No. 2 luggage compartment door name plate.

CAUTION:

Do not burn yourself with the heated luggage compartment door panel or infrared light.

HINT:

Heat at 40 to 60°C (104 to 140°F) for 1 to 2 minutes.

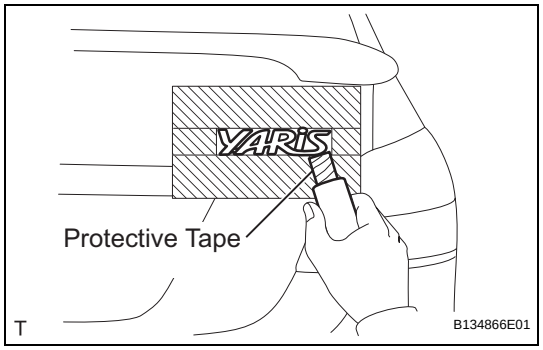

(c) Using a gasket scraper with its tip wrapped in protective tape, gradually peel the adhesive surface and remove the No. 2 luggage compartment door name plate.

(d) Remove the protective tape.

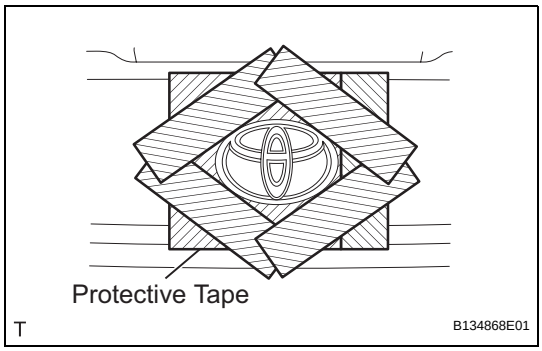

7. REMOVE SYMBOL EMBLEM

(a) Apply protective tape, as shown in the illustration.

(b) Using an infrared light, heat the symbol emblem.

CAUTION:

Do not burn yourself with the heated luggage compartment door panel or infrared light.

HINT:

Heat at 40 to 60°C (104 to 140°F) for 1 to 2 minutes.

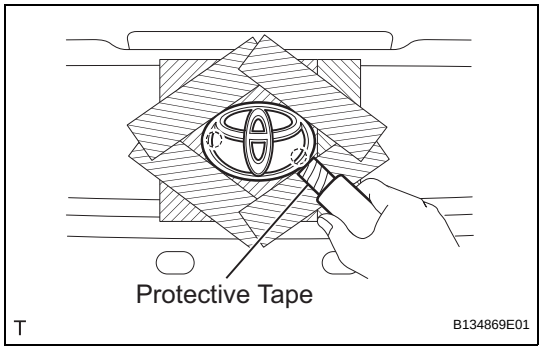

(c) Using a gasket scraper with its tip wrapped in protective tape, gradually peel the adhesive surface and remove the symbol emblem.

(d) Remove the protective tape.

INSTALLATION

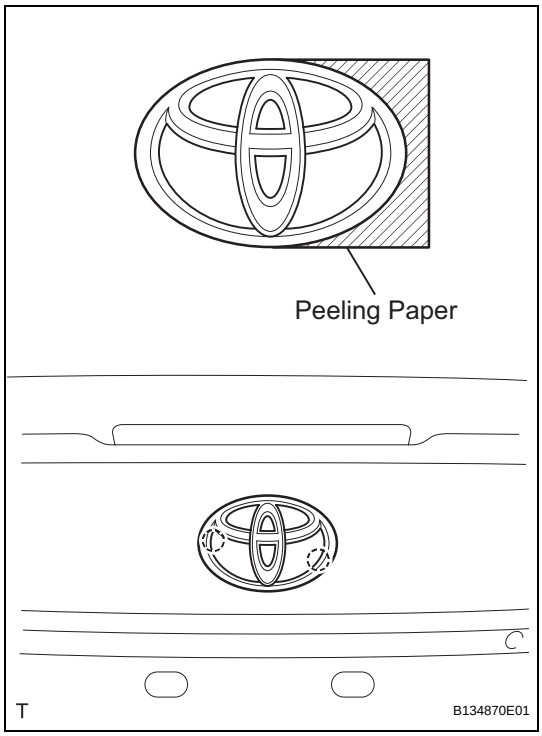

1. INSTALL SYMBOL EMBLEM

(a) Clean the attachment surface.

(1) Using an infrared light, heat the double-sided adhesive tape remaining on the luggage compartment door panel.

HINT:

Heat at 40 to 60°C (104 to 140°F) for 1 to 2 minutes.

(2) Using a shop rag or piece of cloth, rub the remaining double-sided adhesive tape off the back door panel while it is hot from the infrared light.

NOTICE:

Installing the symbol while any double-sided adhesive tape remains on the luggage compartment door panel may cause adhesion failure. Therefore, completely remove the double-sided adhesive tape.

(3) Using a non-residue solvent, clean the attachment surface.

(b) Align the 2 pins and install a new symbol emblem.

NOTICE:

Install the symbol emblem in an environment where the ambient temperature is over 20°C (68°F). If it is below 20°C (68°F), using an infrared light, heat the luggage compartment door panel and the symbol emblem up to 20 to 30°C (68 to 86°F) and install the symbol emblem.

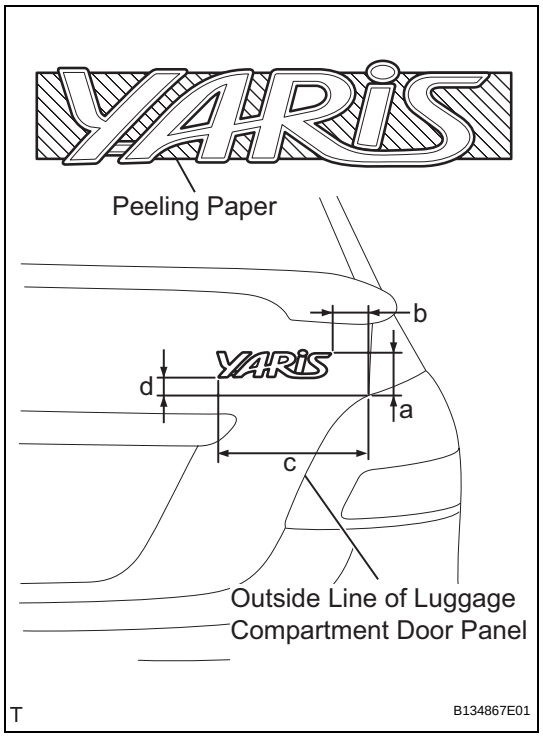

2. INSTALL NO. 2 LUGGAGE COMPARTMENT DOOR NAME PLATE

(a) Clean the attachment surface.

(1) Using an infrared light, heat the double-sided adhesive tape remaining on the luggage compartment door panel.
HINT:
Heat at 40 to 60°C (104 to 140°F) for 1 to 2 minutes.

(2) Using a shop rag or piece of cloth, rub the remaining double-sided adhesive tape off the luggage compartment door panel while it is hot from the infrared light.
NOTICE:
Installing the No. 2 luggage compartment door name plate while any double-sided adhesive tape remains on the luggage compartment door panel may cause adhesion failure. Therefore, completely remove the double-sided adhesive tape.

(3) Using a non-residue solvent, clean the attachment surface.

(b) Install a new No. 2 luggage compartment door name plate as shown in the illustration.
Installation position

Mark	Measurement (along surface)
a	39.4 mm (1.551 in.)
b	44.7 mm (1.760 in.)
c	162.4 mm (6.394 in.)
d	17.8 mm (0.701 in.)

NOTICE:
Install the No. 2 luggage compartment door name plate in an environment where the ambient temperature is over 20°C (68°F). If it is below 20°C (68°F), using an infrared light, heat the luggage compartment door panel and the No. 2 luggage compartment door name plate up to 20 to 30°C (68 to 86°F) and install the No. 2 luggage compartment door name plate.

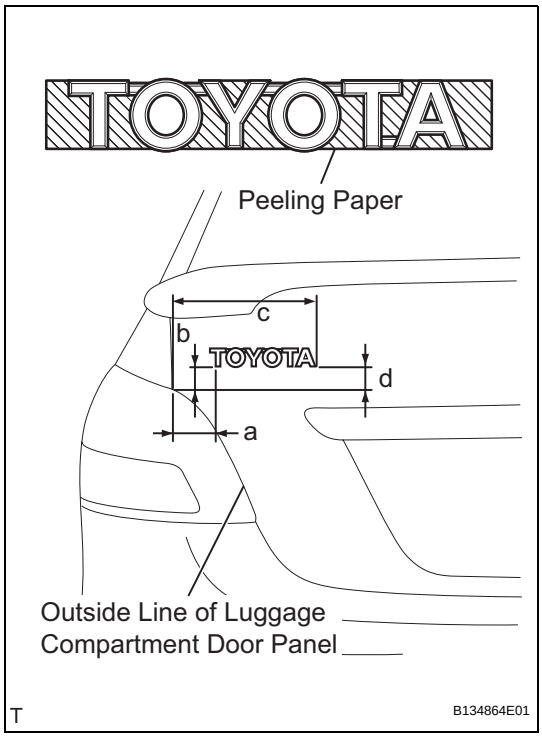

3. INSTALL NO. 6 LUGGAGE COMPARTMENT DOOR NAME PLATE

(a) Clean the attachment surface.

(1) Using an infrared light, heat the double-sided adhesive tape remaining on the luggage compartment door panel.
HINT:
Heat at 40 to 60°C (104 to 140°F) for 1 to 2 minutes.

(2) Using a shop rag or piece of cloth, rub the remaining double-sided adhesive tape off the luggage compartment door panel while it is hot from the infrared light.
NOTICE:
Installing the No. 6 luggage compartment door name plate while any double-sided adhesive tape remains on the luggage compartment door panel may cause adhesion failure. Therefore, completely remove the double-sided adhesive tape.

(3) Using a non-residue solvent, clean the attachment surface.

(b) Install a new No. 6 luggage compartment door name plate as shown in the illustration.
Installation position

Mark	Measurement (along surface)
a	52.8 mm (2.079 in.)
b	17.1 mm (0.673 in.)
c	162.3 mm (0.390 in.)
d	20 mm (0.787 in.)

NOTICE:
Install the No. 6 luggage compartment door name plate in an environment where the ambient temperature is over 20°C (68°F). If it is below 20°C (68°F), using an infrared light, heat the luggage compartment door panel and the No. 6 luggage compartment door name plate up to 20 to 30°C (68 to 86°F) and install the No. 6 luggage compartment door name plate.

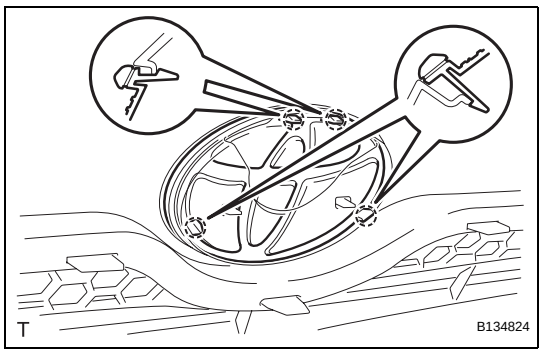

4. INSTALL RADIATOR GRILLE EMBLEM

(a) Engage the 4 claws and install the radiator grille emblem.

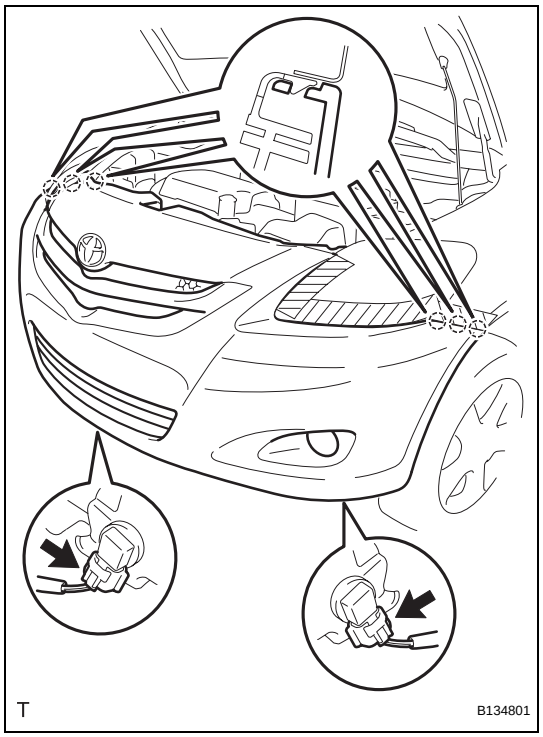

5. INSTALL FRONT BUMPER COVER

(a) w/ Fog Light:

(1) Connect the 2 fog light connectors.

(2) Engage the 6 claws and install the front bumper cover.

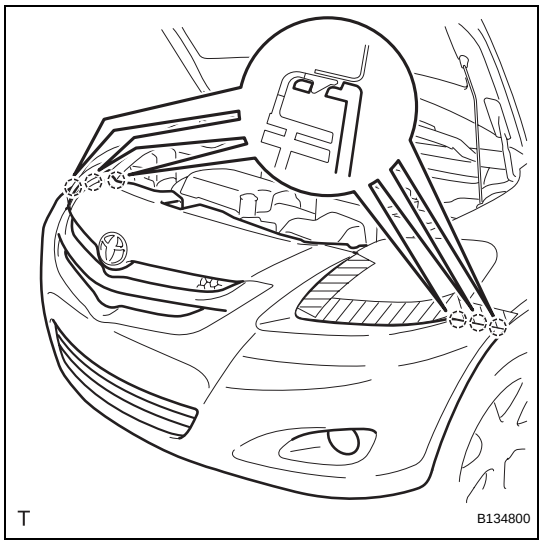

(b) w/o Fog Light:

(1) Engage the 6 claws and install the front bumper cover.

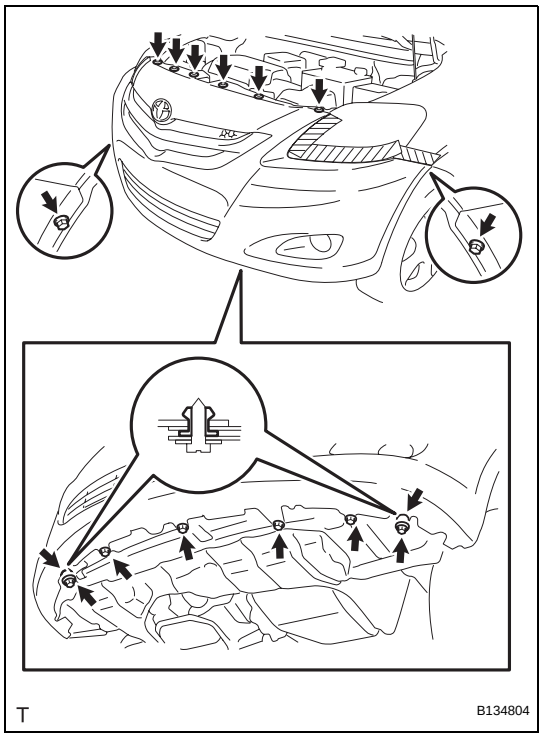

(c) w/ Front Spoiler:
  (1) Install the 6 clips.
  (2) Install the 2 screw grommets.
  (3) Tighten the 5 screws and the 3 bolts.

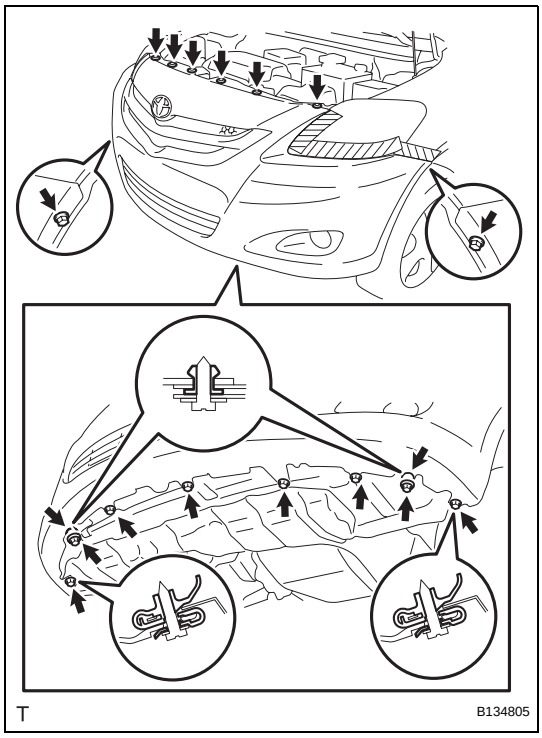

(d) w/o Front Spoiler:
  (1) Install the 6 clips.
  (2) Install the 2 screw grommets.
  (3) Tighten the 7 screw and the 3 bolts.

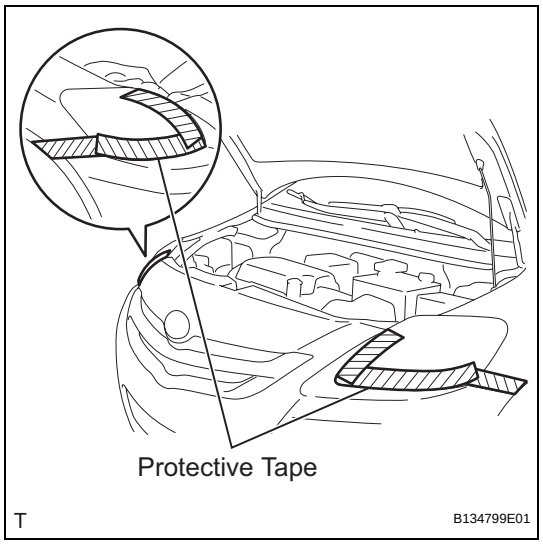

(e) Remove the protective tape.

6. INSTALL FRONT SPOILER COVER (w/ Front Spoiler) (See page ET-19)

7. CONNECT CABLE TO NEGATIVE BATTERY TERMINAL (w/ Fog Light)
Torque: 5.4 N*m (55 kgf*cm, 48 in.*lbf)

NAME PLATE (for Hatchback)

COMPONENTS

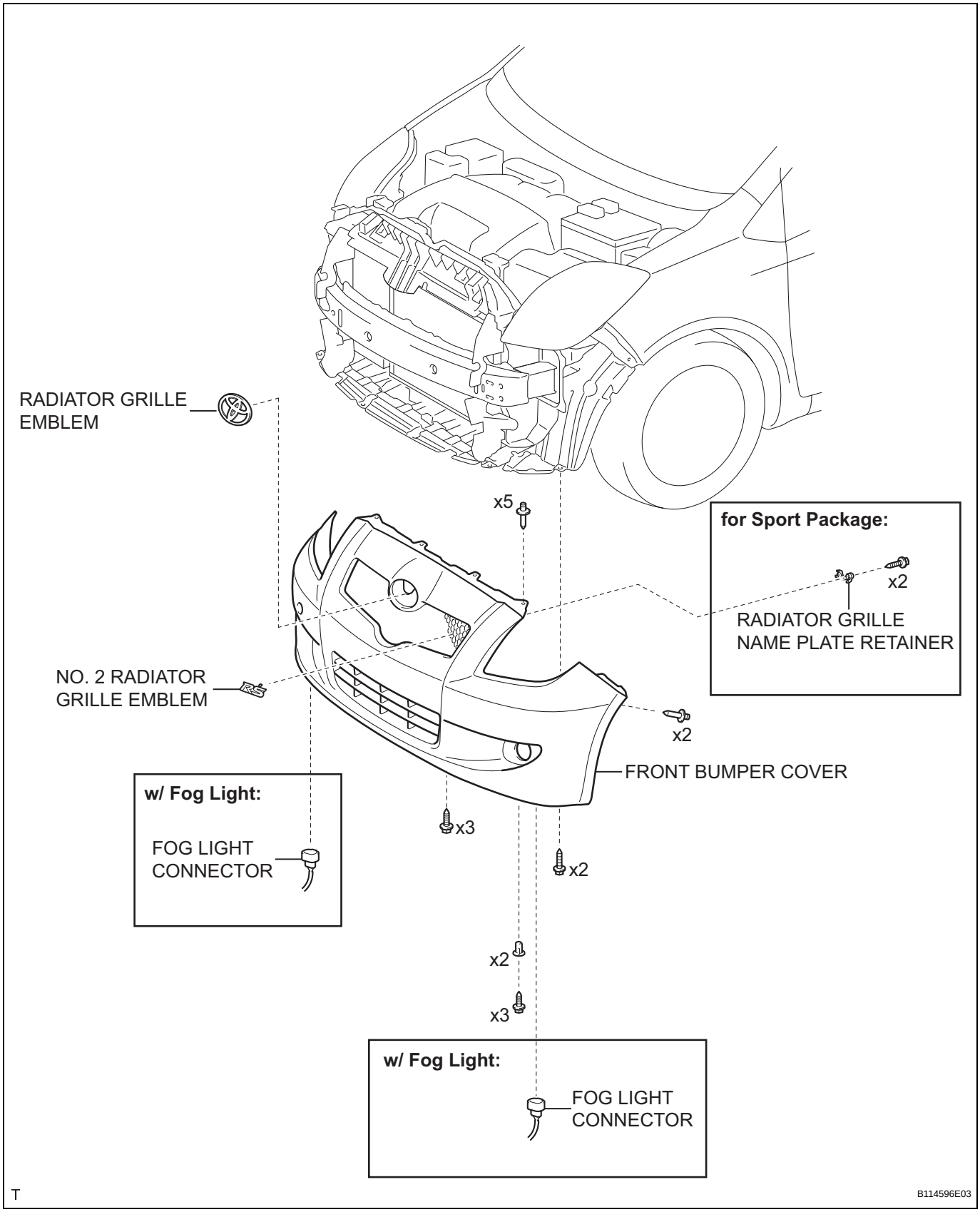

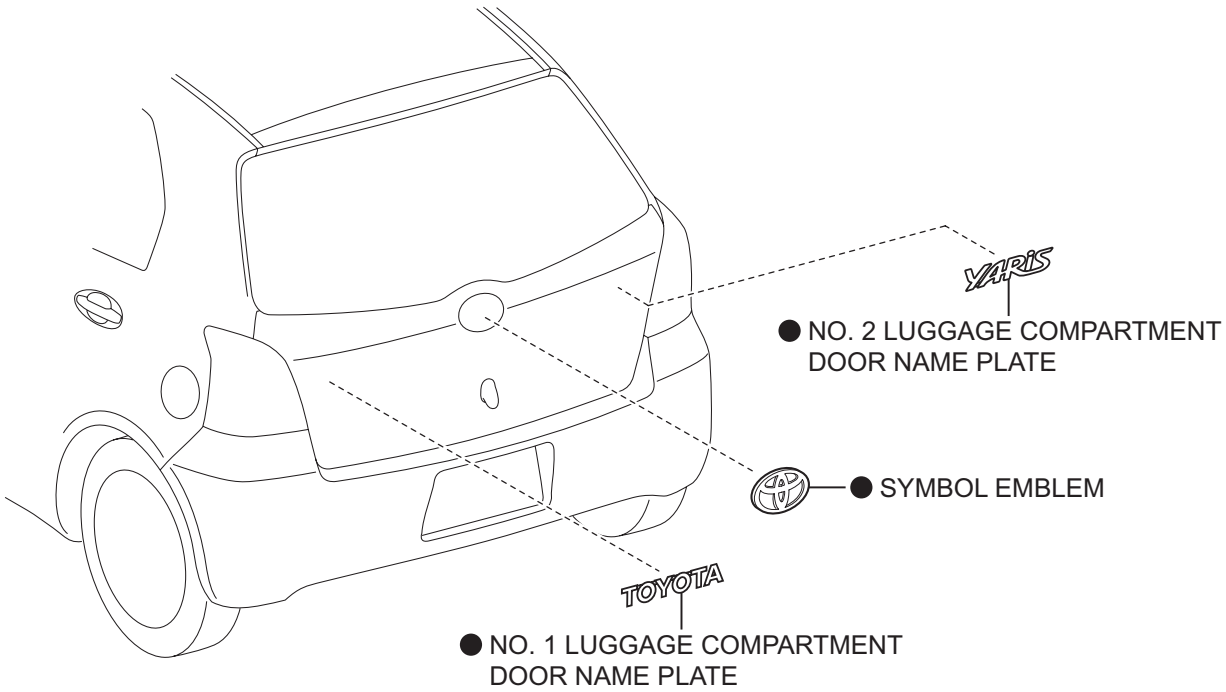

● Non-reusable part

T

B114598E01

REMOVAL

1. DISCONNECT CABLE FROM NEGATIVE BATTERY TERMINAL (w/ Fog Light)

2. REMOVE FRONT BUMPER COVER

(a) Apply protective tape as shown in the illustration.

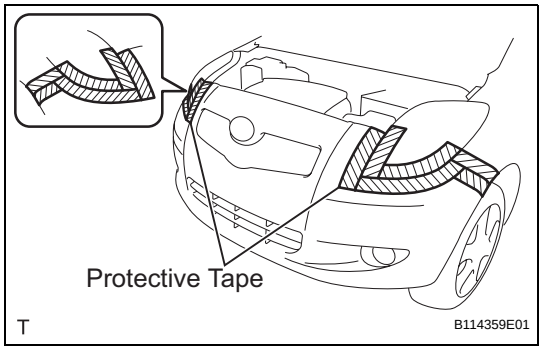

(b) Remove the 8 screws.
(c) Remove the 2 screw grommets.
(d) Remove the 7 clips.

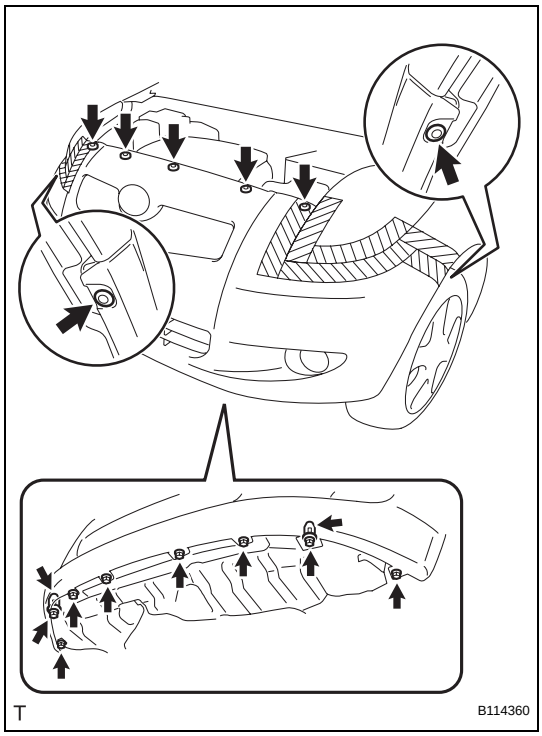

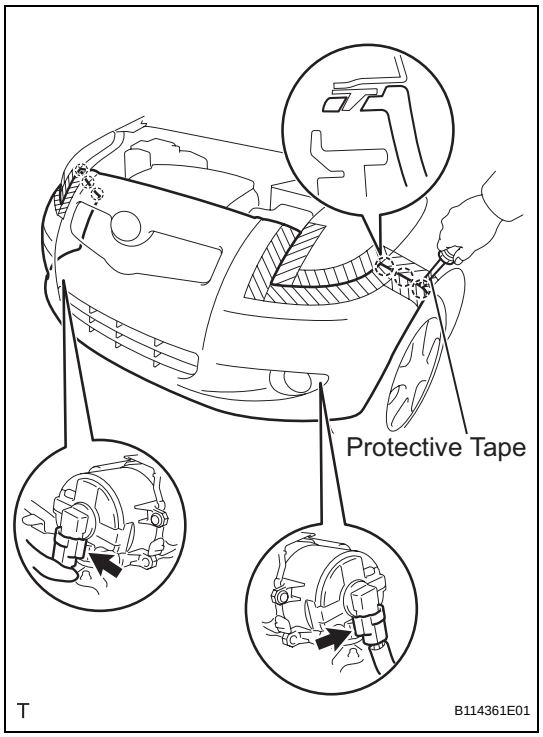

(e) w/ Fog Light:
  (1) Using a screwdriver with its tip wrapped in protective tape, disengage the 6 claws.
  (2) Disconnect the 2 fog light connectors and remove the front bumper.

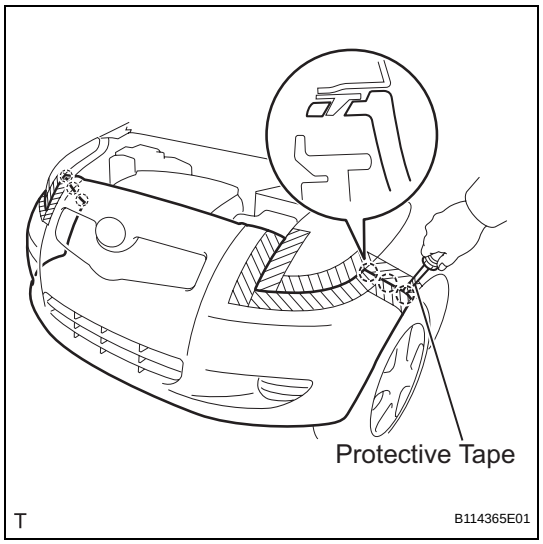

(f) w/o Fog Light:
  (1) Using a screwdriver with its tip wrapped in protective tape, disengage the 6 claws and remove the front bumper.

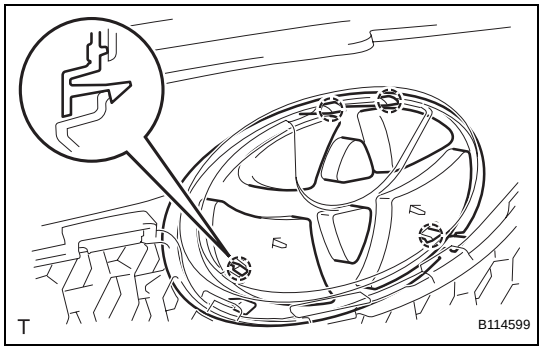

3. REMOVE RADIATOR GRILLE EMBLEM

(a) Disengage the 4 claws and remove the radiator grille emblem.

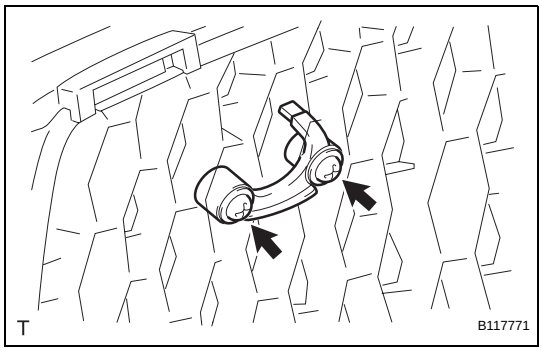

4. REMOVE RADIATOR GRILLE NAME PLATE RETAINER (for Sport Package)

(a) Remove the 2 screws and the radiator grille name plate retainer.

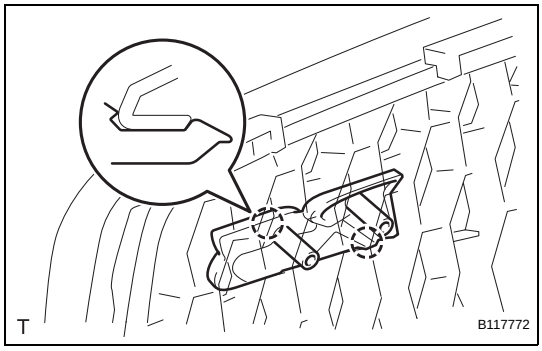

5. REMOVE NO. 2 RADIATOR GRILLE EMBLEM (for Sport Package)

(a) Disengage the 2 claws and remove the No. 2 radiator grille emblem.

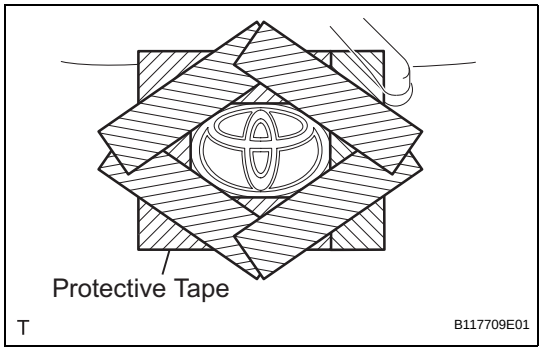

6. REMOVE SYMBOL EMBLEM

(a) Apply protective tape to the back door panel in the area around the symbol emblem.

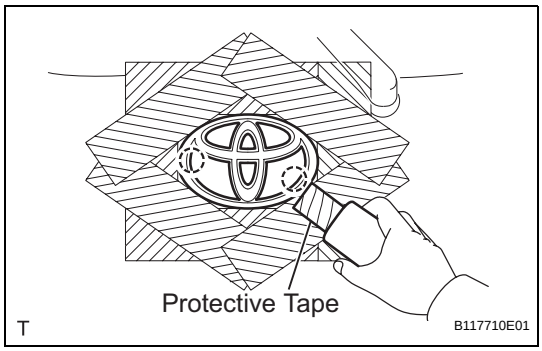

(b) Using an infrared light, heat the symbol emblem.
CAUTION:
Do not burn yourself with the heated back door panel or infrared light.
HINT:
Heat at 40 to 60°C (104 to 140°F) for 1 to 2 minutes.

(c) Using a gasket scraper with its tip wrapped in protective tape, gradually peel the adhesive surface and remove the symbol emblem.

(d) Remove the protective tape.

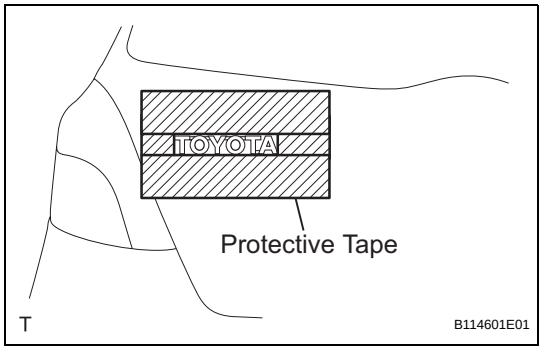

7. REMOVE NO. 1 LUGGAGE COMPARTMENT DOOR NAME PLATE

(a) Apply protective tape to the back door panel in the area around the No. 1 luggage compartment door name plate.

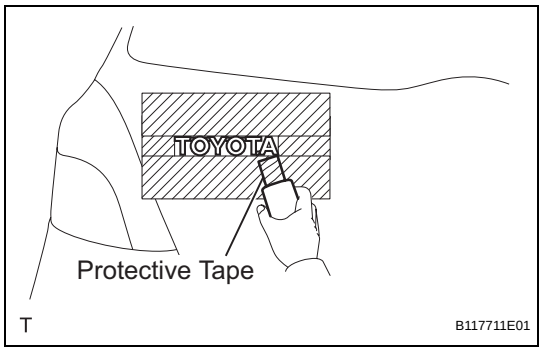

(b) Using an infrared light, heat the No. 1 luggage compartment door name plate.
CAUTION:
Do not burn yourself with the heated back door panel or infrared light.
HINT:
Heat at 40 to 60°C (104 to 140°F) for 1 to 2 minutes.

(c) Using a gasket scraper with its tip wrapped in protective tape, gradually peel the adhesive surface and remove the No. 1 luggage compartment door name plate.

(d) Remove the protective tape.

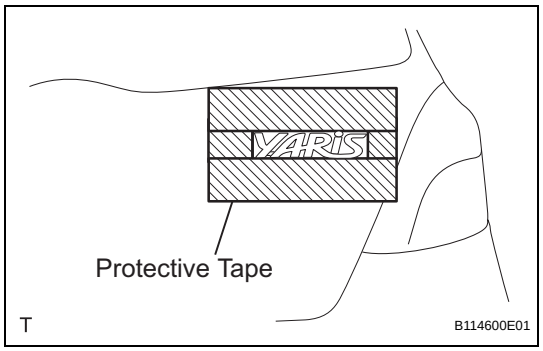

8. REMOVE NO. 2 LUGGAGE COMPARTMENT DOOR NAME PLATE

(a) Apply protective tape to the back door panel in the area around the No. 2 luggage compartment door name plate.

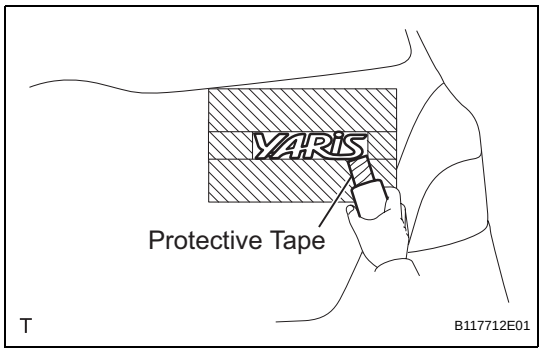

(b) Using an infrared light, heat the No. 2 luggage compartment door name plate.
CAUTION:
Do not burn yourself with the heated back door panel or infrared light.
HINT:
Heat at 40 to 60°C (104 to 140°F) for 1 to 2 minutes.

(c) Using a gasket scraper with its tip wrapped in protective tape, gradually peel the adhesive surface and remove the No. 2 luggage compartment door name plate.

(d) Remove the protective tape.

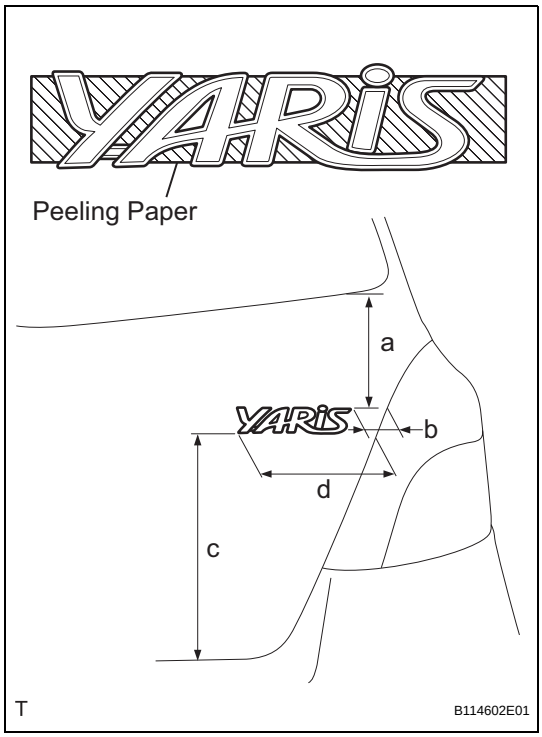

INSTALLATION

1. INSTALL NO. 2 LUGGAGE COMPARTMENT DOOR NAME PLATE

(a) Clean the attachment surface.

(1) Using an infrared light, heat the double-sided adhesive tape remaining on the back door panel.
HINT:
Heat at 40 to 60°C (104 to 140°F) for 1 to 2 minutes.

(2) Using a shop rag or piece of cloth, rub the double-sided adhesive tape off the back door panel while it is hot from the infrared light.
NOTICE:
Installing the No. 2 luggage compartment door name plate while any double-sided tape remains on the back door panel may cause adhesion failure. Therefore, completely remove the double-sided tape.

(3) Using a non-residue solvent, clean the attachment surface.

(b) Install a new No. 2 luggage compartment door name plate as shown in the illustration.
Installation position

Mark	Measurement (along surface)
a	158.8 mm (6.252 in.)
b	40.3 mm (1.587 in.)
c	255.9 mm (10.075 in.)
d	157.6 mm (6.205 in.)

NOTICE:
Install the No. 2 luggage compartment door name plate in an environment where the ambient temperature is over 20°C (68°F). If it is below 20°C (68°F), using an infrared light, heat the back door panel and the No. 2 luggage compartment door name plate up to 20 to 30°C (68 to 86°F) and install the No. 2 luggage compartment door name plate.

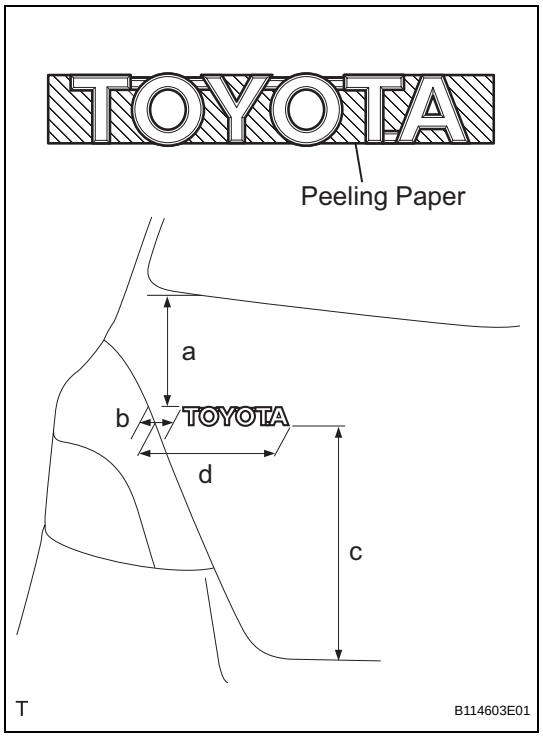

2. INSTALL NO. 1 LUGGAGE COMPARTMENT DOOR NAME PLATE

(a) Clean the attachment surface.

(1) Using an infrared light, heat the double-sided adhesive tape remaining on the back door panel.
HINT:
Heat at 40 to 60°C (104 to 140°F) for 1 to 2 minutes.

(2) Using a shop rag or piece of cloth, rub the double-sided adhesive tape off the back door panel while it is hot from the infrared light.
NOTICE:
Installing the No. 1 luggage compartment door name plate while any double-sided tape remains on the back door panel may cause adhesion failure. Therefore, completely remove the double-sided tape.

(3) Using a non-residue solvent, clean the attachment surface.

(b) Install a new No. 1 luggage compartment door name plate as shown in the illustration.
Installation position

Mark	Measurement (along surface)
a	158.5 mm (6.24 in.)
b	41.7 mm (1.642 in.)
c	266.1 mm (10.476 in.)
d	156.4 mm (6.157 in.)

NOTICE:
Install the No. 1 luggage compartment door name plate in an environment where the ambient temperature is over 20°C (68°F). If it is below 20°C (68°F), using an infrared light, heat the back door panel and the No. 1 luggage compartment door name plate up to 20 to 30°C (68 to 86°F) and install the No. 1 luggage compartment door name plate.

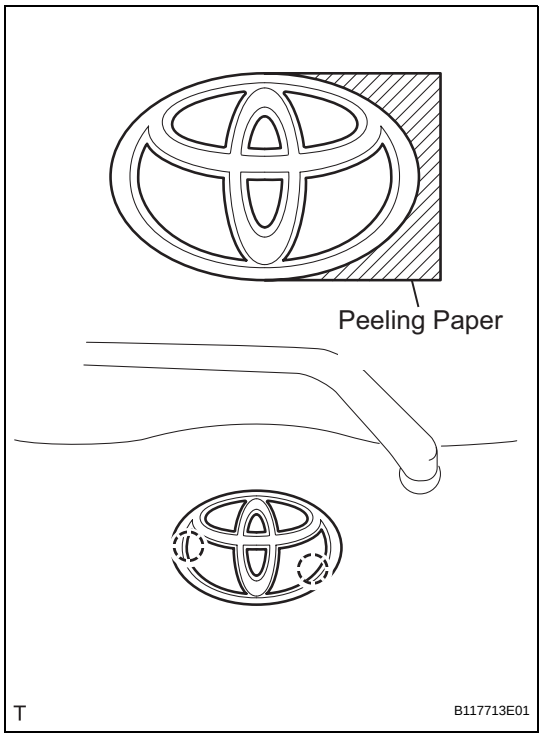

3. INSTALL SYMBOL EMBLEM

(a) Clean the attachment surface.

(1) Using an infrared light, heat the double-sided adhesive tape remaining on the back door panel.
HINT:
Heat at 40 to 60°C (104 to 140°F) for 1 to 2 minutes.

(2) Using a shop rag or piece of cloth, rub the remaining double-sided adhesive tape off the back door panel while it is hot from the infrared light.
NOTICE:
Installing the symbol emblem with any double-sided tape remaining on the back door panel may cause adhesion failure. Therefore, completely remove the double-sided tape.

(3) Using a non-residue solvent, clean the attachment surface.

(b) Insert the 2 bosses into the back door panel and install the symbol emblem.
NOTICE:
Install the symbol emblem in an environment where the ambient temperature is over 20 °C (68°F). If it is below 20°C (68°F), using an infrared light, heat the back door panel and the symbol emblem up to 20 to 30°C (68 to 86°F) and install the symbol emblem.

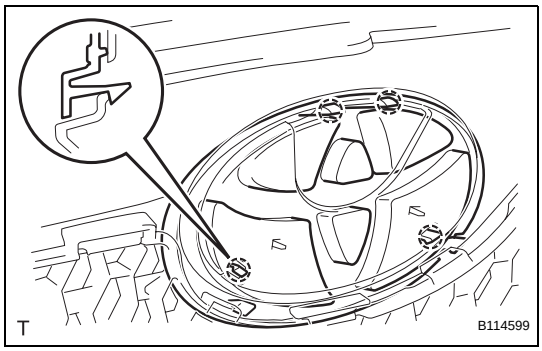

4. INSTALL RADIATOR GRILLE EMBLEM

(a) Engage the 4 claws and install the radiator grille emblem.

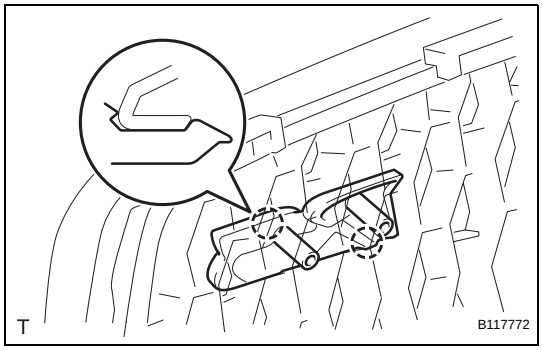

5. INSTALL NO. 2 RADIATOR GRILLE EMBLEM (for Sport Package)

(a) Engage the 2 claws and install the No. 2 radiator grille emblem.

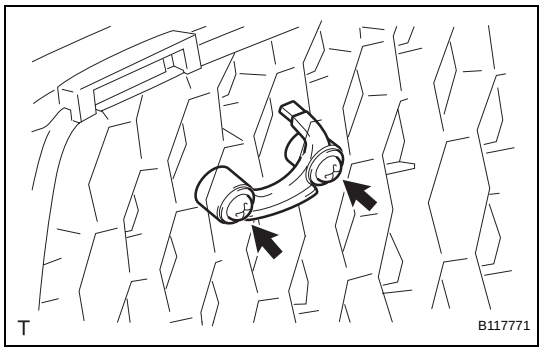

6. INSTALL RADIATOR GRILLE NAME PLATE RETAINER (for Sport Package)

(a) Install the radiator grille name plate retainer with the 2 screws.

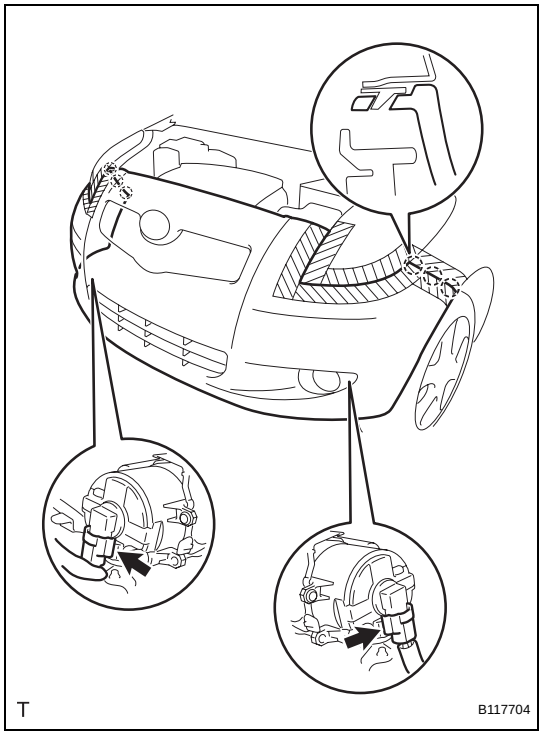

7. INSTALL FRONT BUMPER COVER

(a) w/ Fog Light:
  (1) Connect the 2 fog light connectors.
  (2) Engage the 6 claws and install the front bumper.

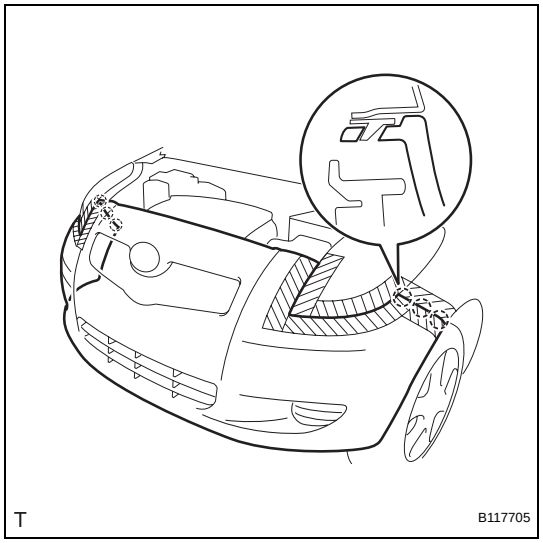

(b) w/o Fog Light:
  (1) Engage the 6 claws and install the front bumper.

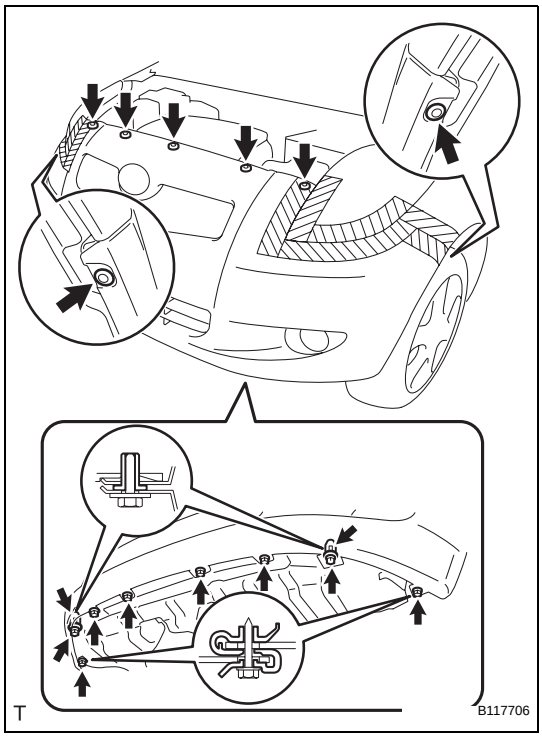

(c) Install the 7 clips.
(d) Install the 2 screw grommets.
(e) Tighten the 8 screws.

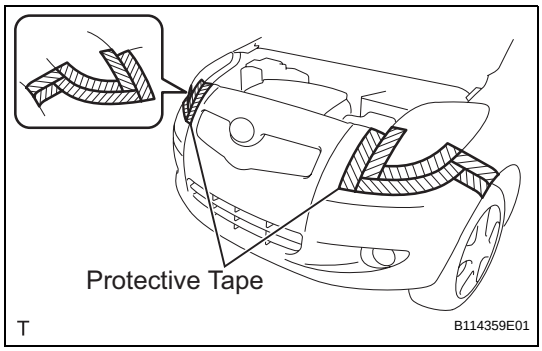

(f) Remove the protective tape.

8. CONNECT CABLE TO NEGATIVE BATTERY TERMINAL (w/ Fog Light)
Torque: 5.4 N*m (55 kgf*cm, 48 in.*lbf)

REAR SPOILER (for Sedan)

COMPONENTS

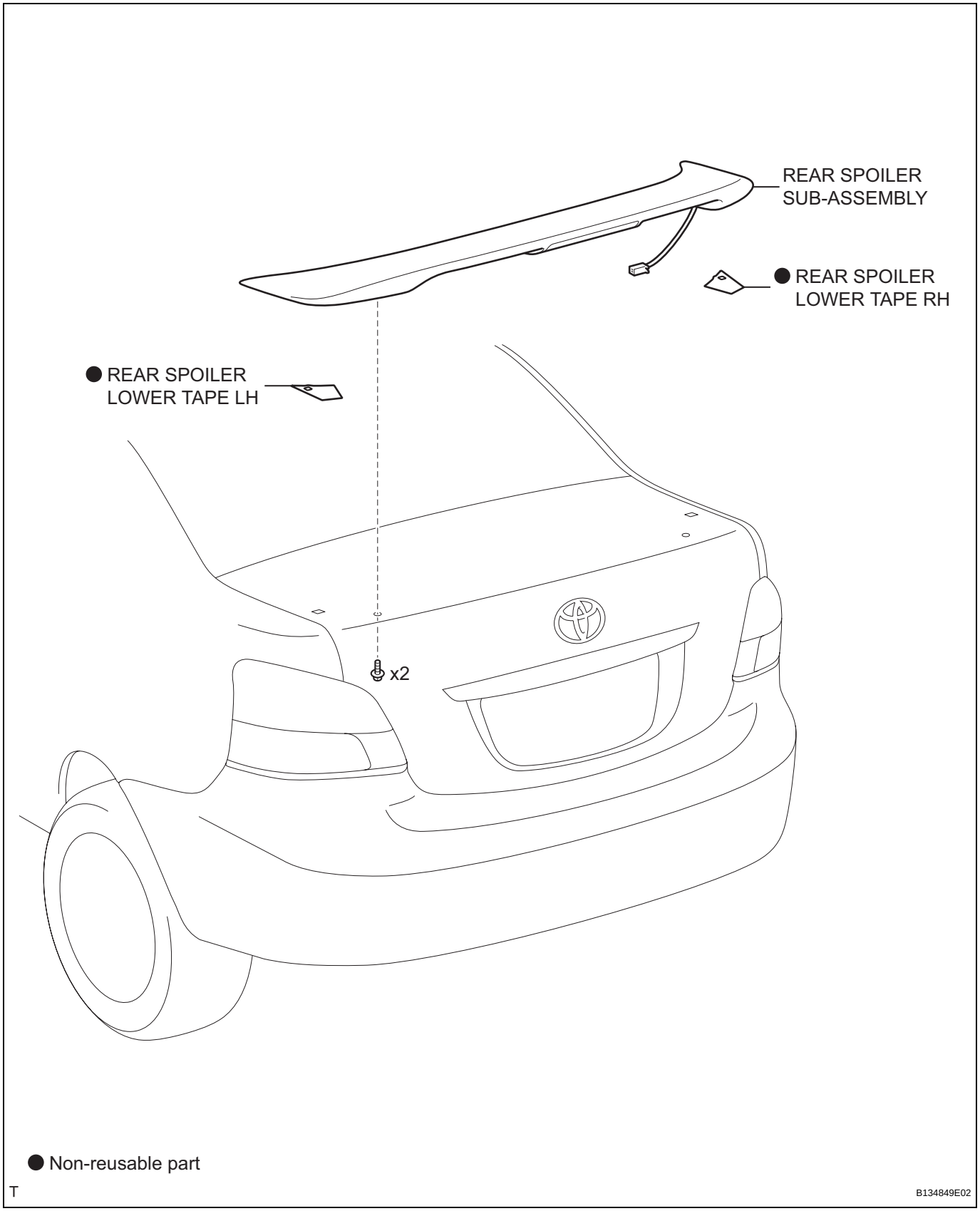

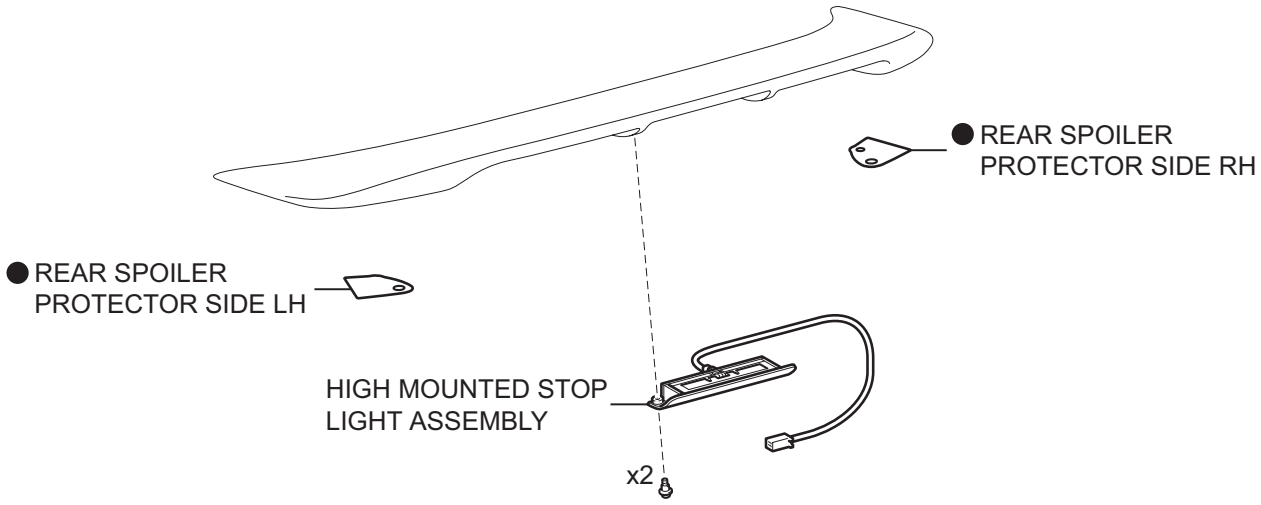

● Non-reusable part

T

B134850E02

REMOVAL

1. DISCONNECT CABLE FROM NEGATIVE BATTERY TERMINAL

2. REMOVE REAR SPOILER SUB-ASSEMBLY

(a) Disconnect the center stop light connector.

(b) Remove the 2 bolts.

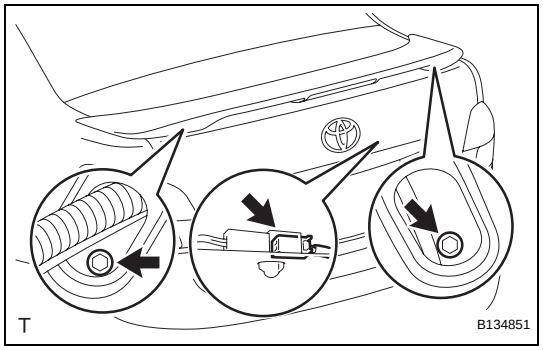

(c) Apply protective tape to the luggage compartment door panel in the periphery of the rear spoiler.

(d) Using an infrared light, heat the adhesive tape remaining on the rear spoiler.
HINT:
Heat at 40 to 60°C (104 to 140°F) for 1 to 2 minutes.

(e) Tie both piano wire ends to wooden blocks or similar objects.

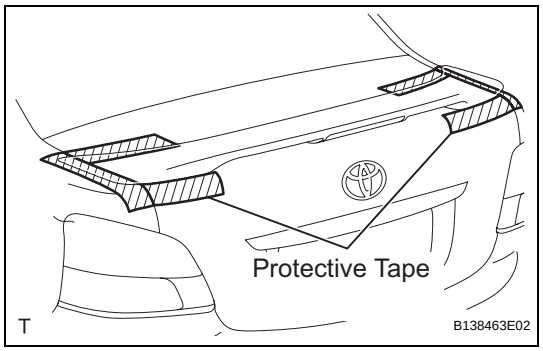

(f) Cut the adhesive tape by pulling the piano wire alternatively toward you.

(g) When reusing the rear spoiler, set the wooden blocks or similar objects along the body to avoid damaging the rear spoiler end portion.

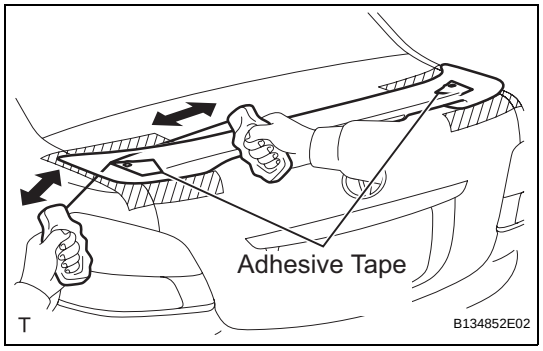

(h) Disengage the 2 clips and remove the rear spoiler.

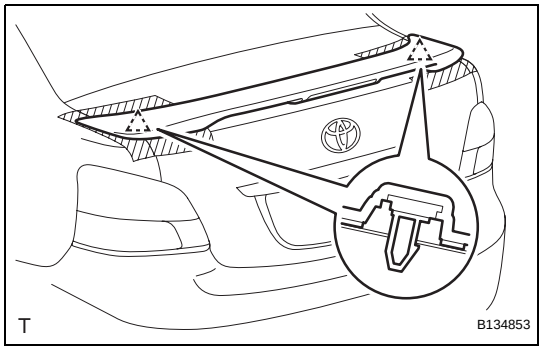

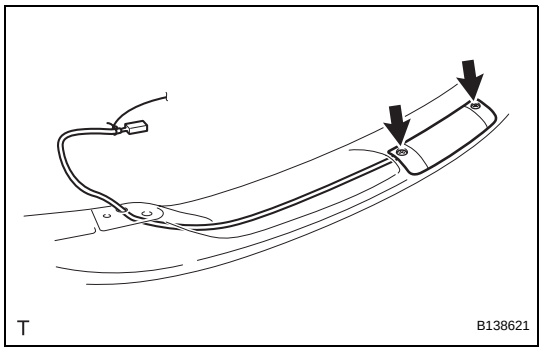

DISASSEMBLY

1. REMOVE HIGH MOUNTED STOP LIGHT ASSEMBLY

(a) Tie a piece of string to the tip of the wire harness.

(b) Remove the 2 screws and the high mounted stop light.

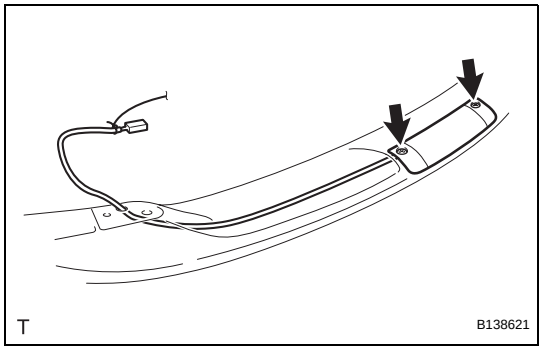

REASSEMBLY

1. INSTALL HIGH MOUNTED STOP LIGHT ASSEMBLY

(a) Install the high mounted stop light with the 2 screws.

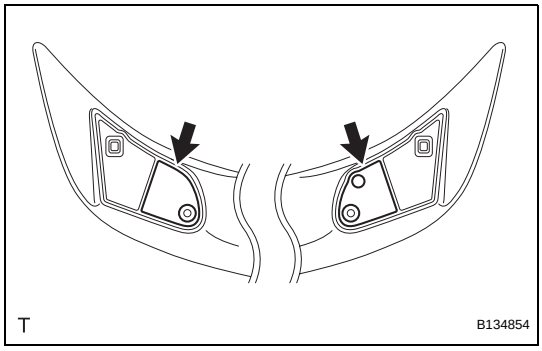

INSTALLATION

1. INSTALL REAR SPOILER PROTECTOR SIDE LH

NOTICE:

Follow these procedures only when replacing the protector.

(a) Apply a new rear spoiler protector to the rear spoiler installation surface as shown in the illustration.

2. INSTALL REAR SPOILER PROTECTOR SIDE RH

HINT:

Use the same procedure as for the LH side.

3. INSTALL REAR SPOILER SUB-ASSEMBLY

(a) Clean the rear spoiler (When reusing the rear spoiler).

(1) Using an infrared light, heat the double-sided adhesive tape remaining on the luggage compartment door panel.

HINT:

Heat at 40 to 60°C (104 to 140°F) for 1 to 2 minutes.

(2) Using a shop rag or piece of cloth, rub the remaining double-sided adhesive tape off the rear spoiler while it is hot from the infrared light.

NOTICE:

Installing the rear spoiler while any double-sided adhesive tape remains on the luggage compartment door panel may cause adhesion failure. Therefore, completely remove the double-sided adhesive tape.

(3) Using white gasoline, clean the rear spoiler.

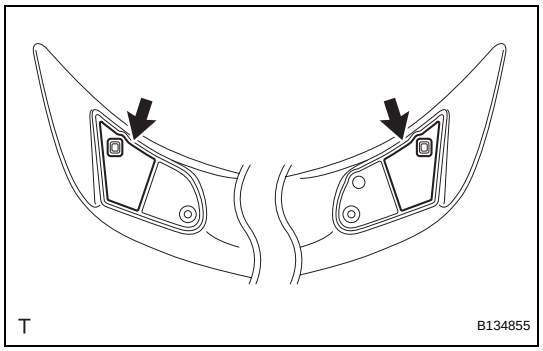

(4) Apply new double-sided adhesive tape to the rear spoiler installation surface as shown in the illustration.

(b) Clean the attachment surface.

(1) Using an infrared light, heat the double-sided adhesive tape remaining on the luggage compartment door panel.
HINT:
Heat at 40 to 60°C (104 to 140°F) for 1 to 2 minutes.

(2) Using a shop rag or piece of cloth, rub the remaining double-sided adhesive tape off the luggage compartment door panel while it is hot from the infrared light.
NOTICE:
Installing the rear spoiler while any double-sided adhesive tape remains on the luggage compartment door panel may cause adhesion failure. Therefore, completely remove the double-sided adhesive tape.

(3) Using white gasoline, clean the attachment surface.

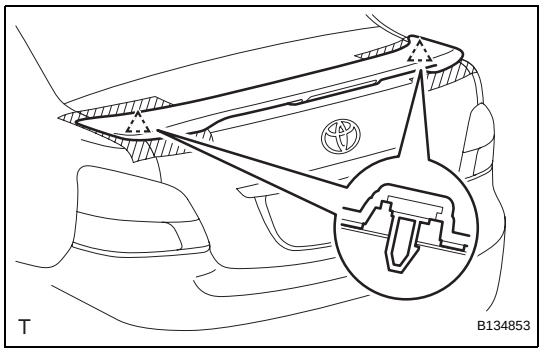

(c) Install the wire harness into the luggage compartment door panel hole.

(d) Engage the 2 clips and install the rear spoiler.

(e) Remove the protective tape.

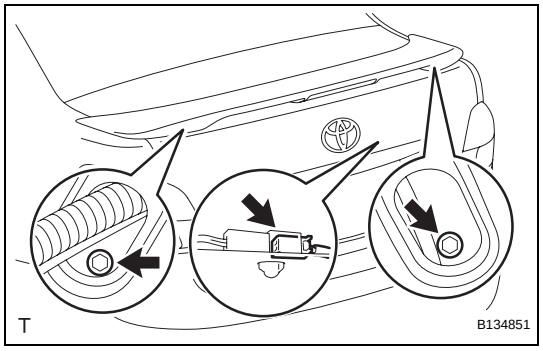

(f) Tighten the 2 bolts.

(g) Connect the center stop light connector.

4. CONNECT CABLE TO NEGATIVE BATTERY TERMINAL
Torque: 5.4 N*m (55 kgf*cm, 48 in.*lbf)

REAR SPOILER (for Hatchback)

COMPONENTS

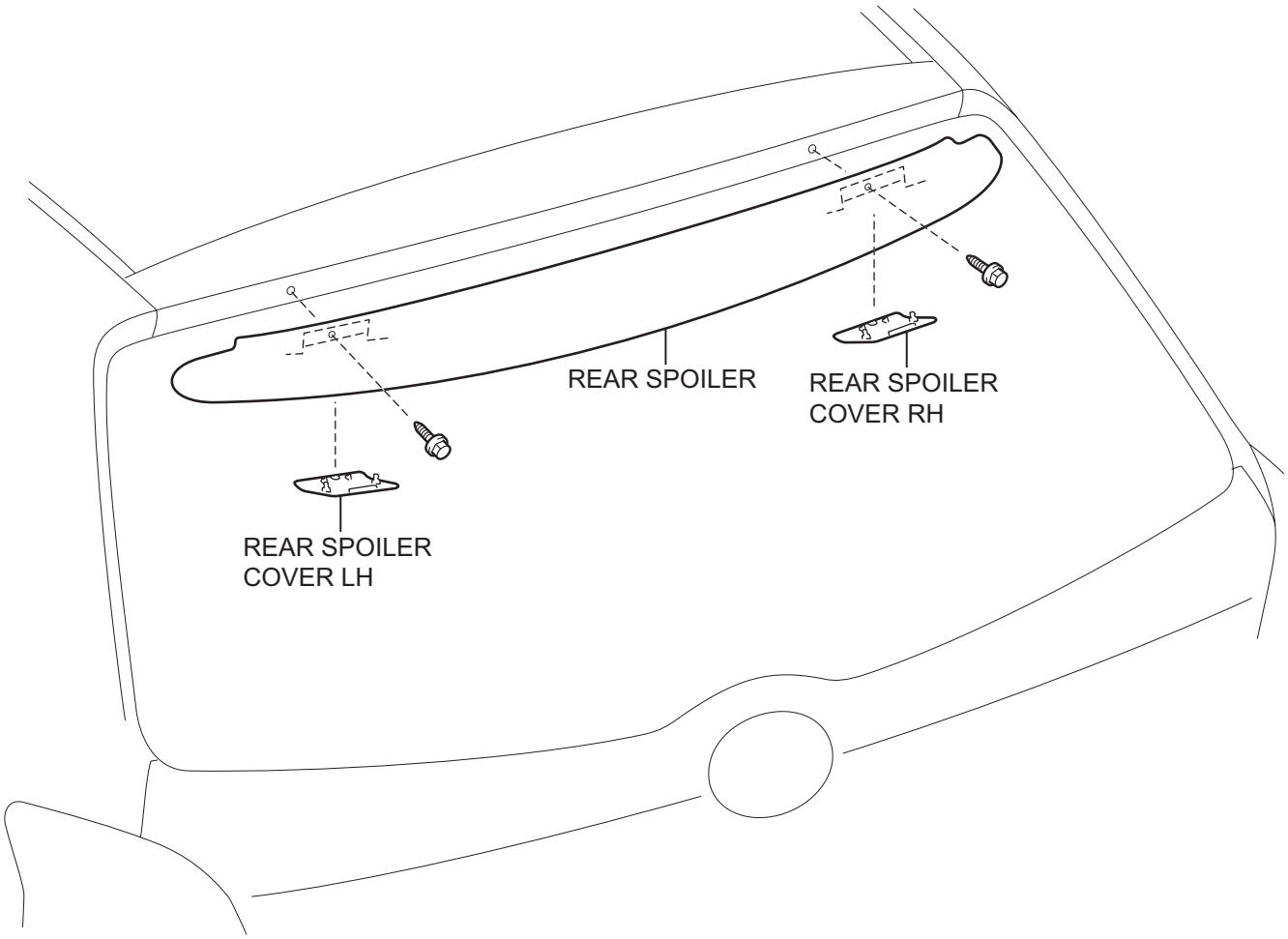

T

B117717E01

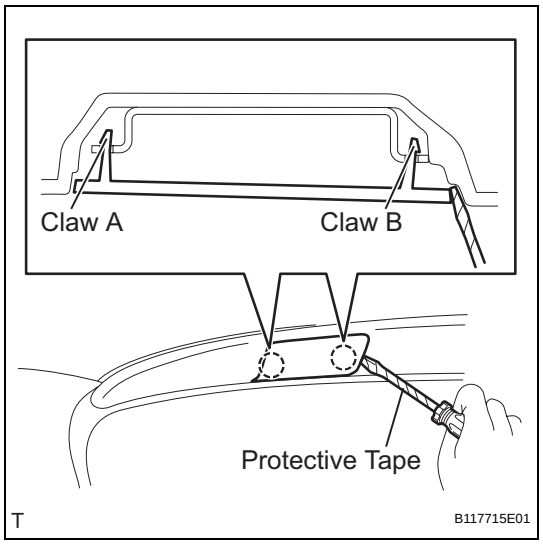

REMOVAL

1. REMOVE REAR SPOILER COVER LH

(a) Using a screwdriver with its tip wrapped in protective tape, disengage the 2 claws and remove the rear spoiler.

NOTICE:

When removing the rear spoiler cover, first disengage claw B nearest the inside of the vehicle and then disengage claw A nearest the outside the vehicle.

2. REMOVE REAR SPOILER COVER RH

HINT:

Use the same procedure as for the LH side.

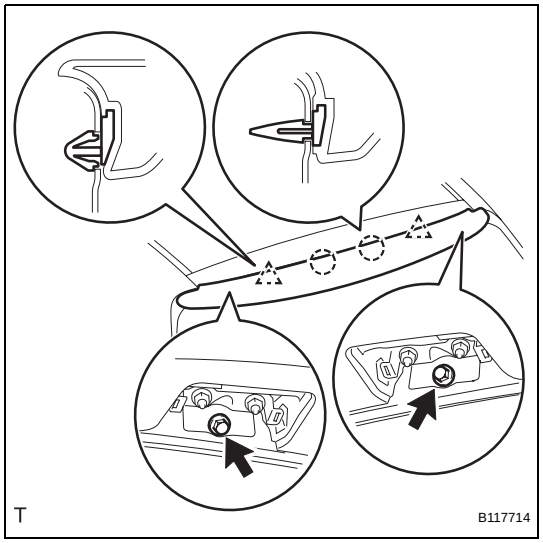

3. REMOVE REAR SPOILER

(a) Remove the 2 screws.

(b) Disengage the 2 clips and the 2 pins and remove the rear spoiler.

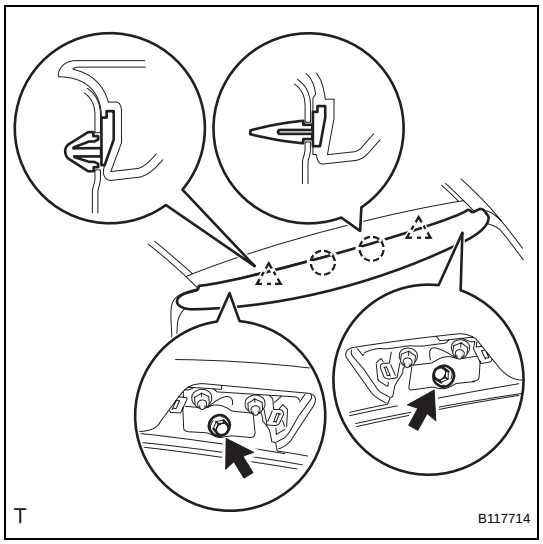

INSTALLATION

1. INSTALL REAR SPOILER

(a) Engage the 2 clips and the 2 pins and install the rear spoiler.

(b) Tighten the 2 screws.

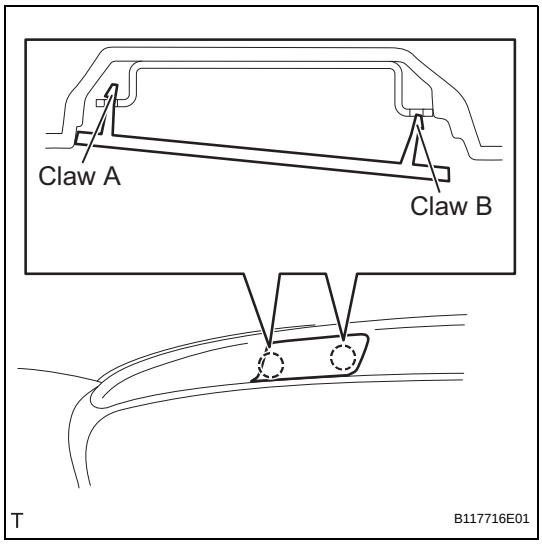

2. INSTALL REAR SPOILER COVER LH

(a) Engage the 2 claws and install the rear spoiler cover.

NOTICE:

When installing the rear spoiler cover, first engage claw A nearest the outside of the vehicle and then push in claw B nearest the inside of the vehicle.

3. INSTALL REAR SPOILER COVER RH

HINT:

Use the same procedure as for the LH side.

FRONT DOOR BELT MOULDING (for Sedan)

COMPONENTS

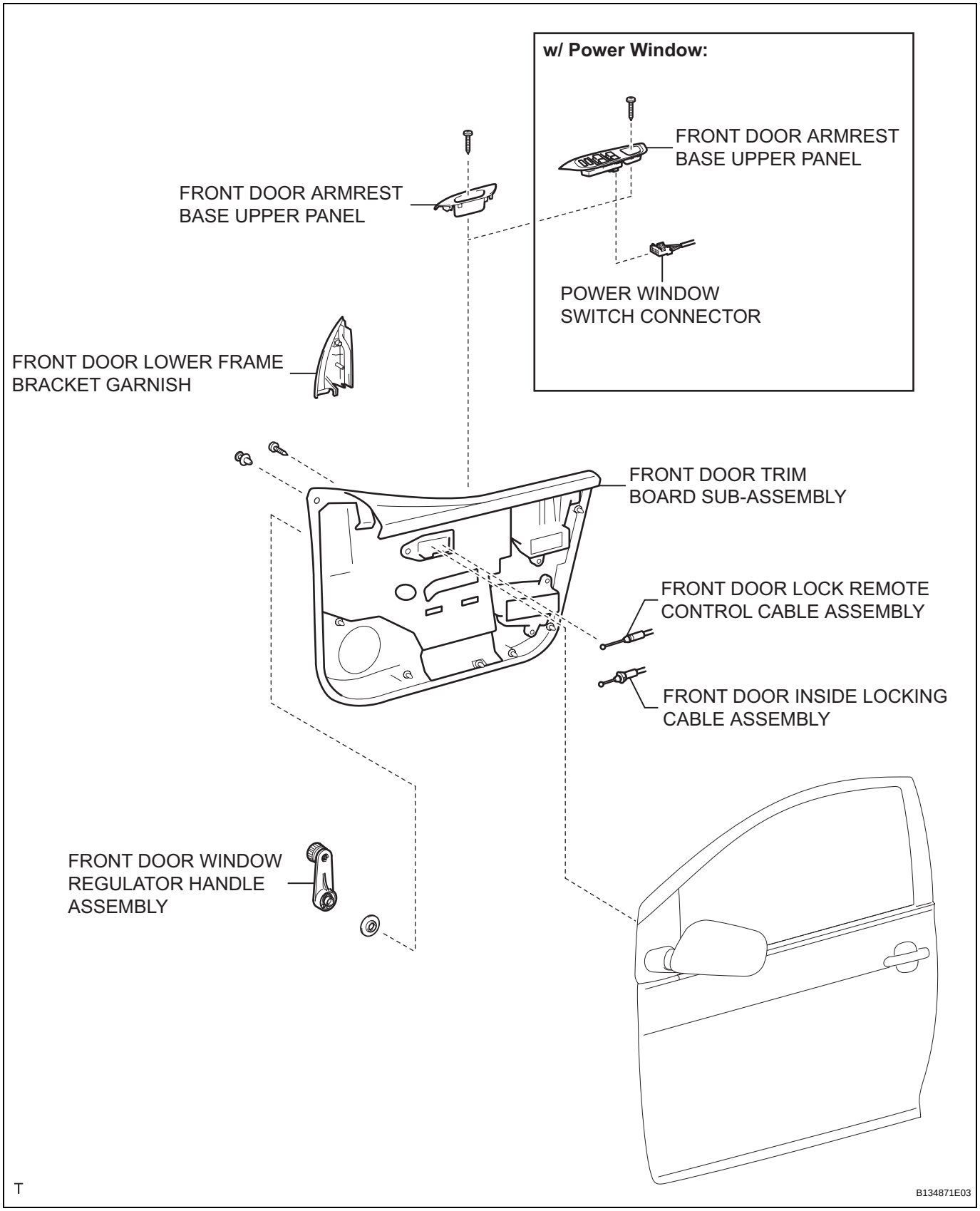

ET

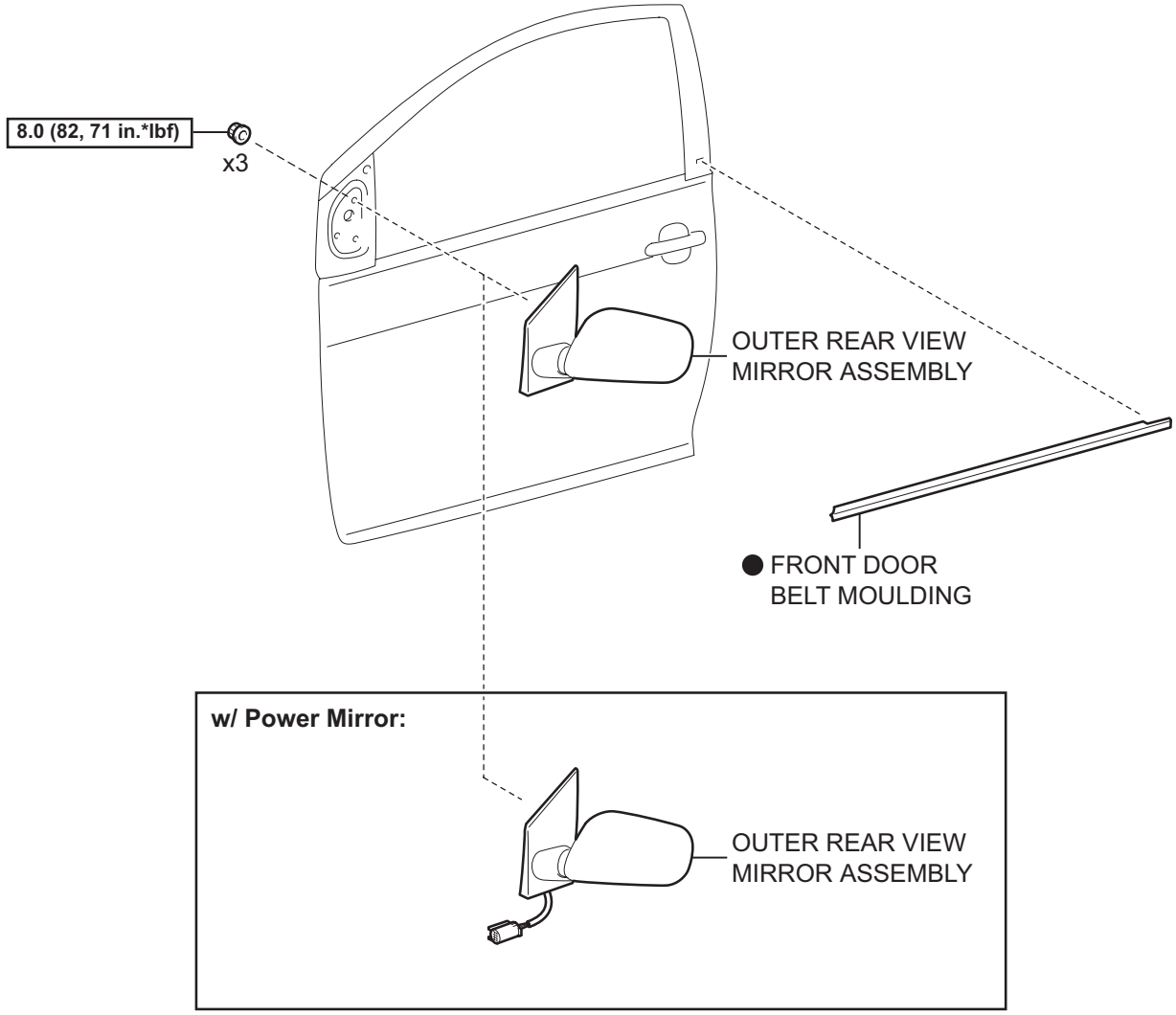

N*m (kgf*cm, ft*lbf) : Specified torque

● Non-reusable part

T

B134872E02

REMOVAL

HINT:
The procedure described below is for the LH side. Use the same procedure for both the RH and LH sides, unless otherwise specified.

1. **DISCONNECT CABLE FROM NEGATIVE BATTERY TERMINAL**
2. **REMOVE FRONT DOOR WINDOW REGULATOR HANDLE ASSEMBLY (w/o Power Window) (See page ED-9)**
3. **REMOVE FRONT DOOR LOWER FRAME BRACKET GARNISH (See page ED-9)**
4. **REMOVE FRONT DOOR ARMREST BASE UPPER PANEL (See page ED-9)**
5. **REMOVE FRONT DOOR TRIM BOARD SUB-ASSEMBLY (See page ED-11)**
6. **REMOVE OUTER REAR VIEW MIRROR ASSEMBLY (See page MI-8)**
7. **REMOVE FRONT DOOR BELT MOULDING**
   (a) Apply protective tape to the door panel in the periphery of the front door belt moulding.

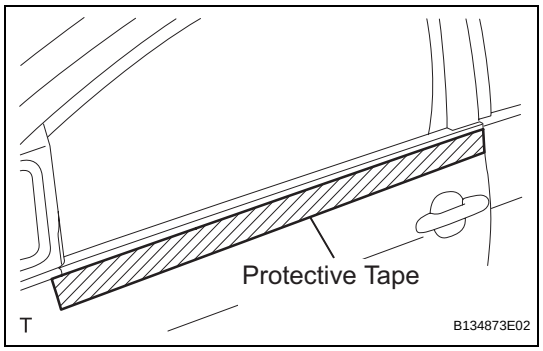

   (b) Using a moulding remover, disengage the 6 claws and remove the front door belt moulding.

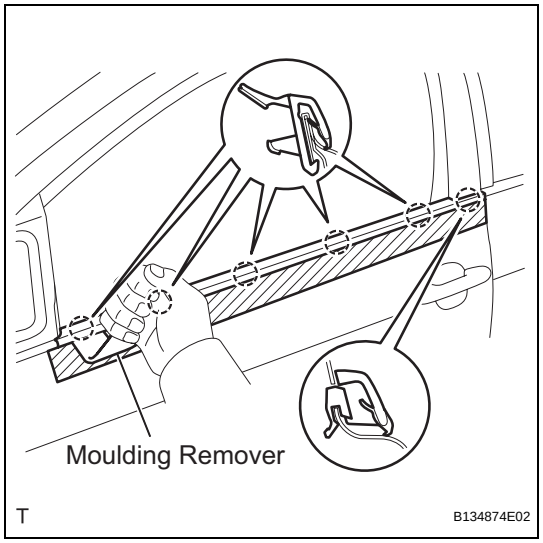

INSTALLATION

HINT:
The procedure described below is for the LH side. Use the same procedure for both the RH and LH sides, unless otherwise specified.

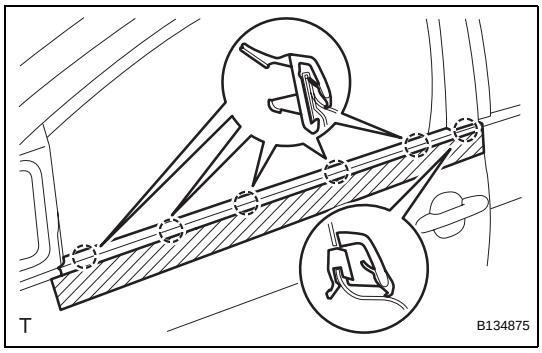

1. INSTALL FRONT DOOR BELT MOULDING

(a) Engage the 6 claws and install a new front door belt moulding.

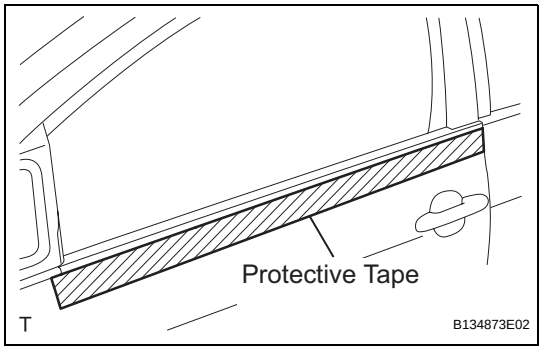

(b) Remove the protective tape.

2. INSTALL OUTER REAR VIEW MIRROR ASSEMBLY (See page MI-11)

3. INSTALL FRONT DOOR TRIM BOARD SUB-ASSEMBLY (See page ED-26)

4. INSTALL FRONT DOOR ARMREST BASE UPPER PANEL (See page ED-28)

5. INSTALL FRONT DOOR LOWER FRAME BRACKET GARNISH (See page ED-28)

6. INSTALL FRONT DOOR WINDOW REGULATOR HANDLE ASSEMBLY (See page ED-29)

7. CONNECT CABLE TO NEGATIVE BATTERY TERMINAL (w/ Power Window)
Torque: 5.4 N*m (55 kgf*cm, 48 in.*lbf)

FRONT DOOR BELT MOULDING (for Hatchback)

COMPONENTS

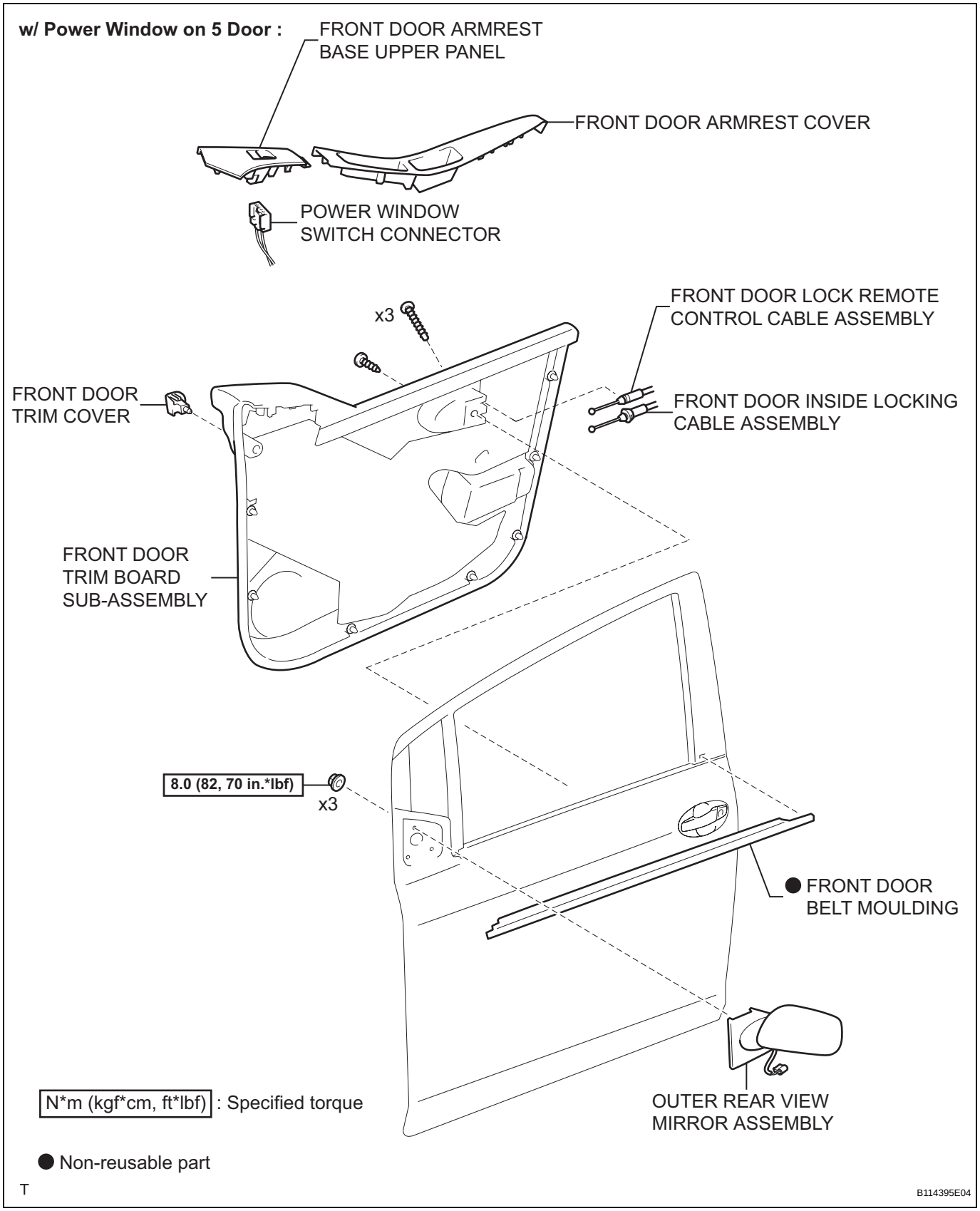

ET

w/o Power Window on 5 Door:

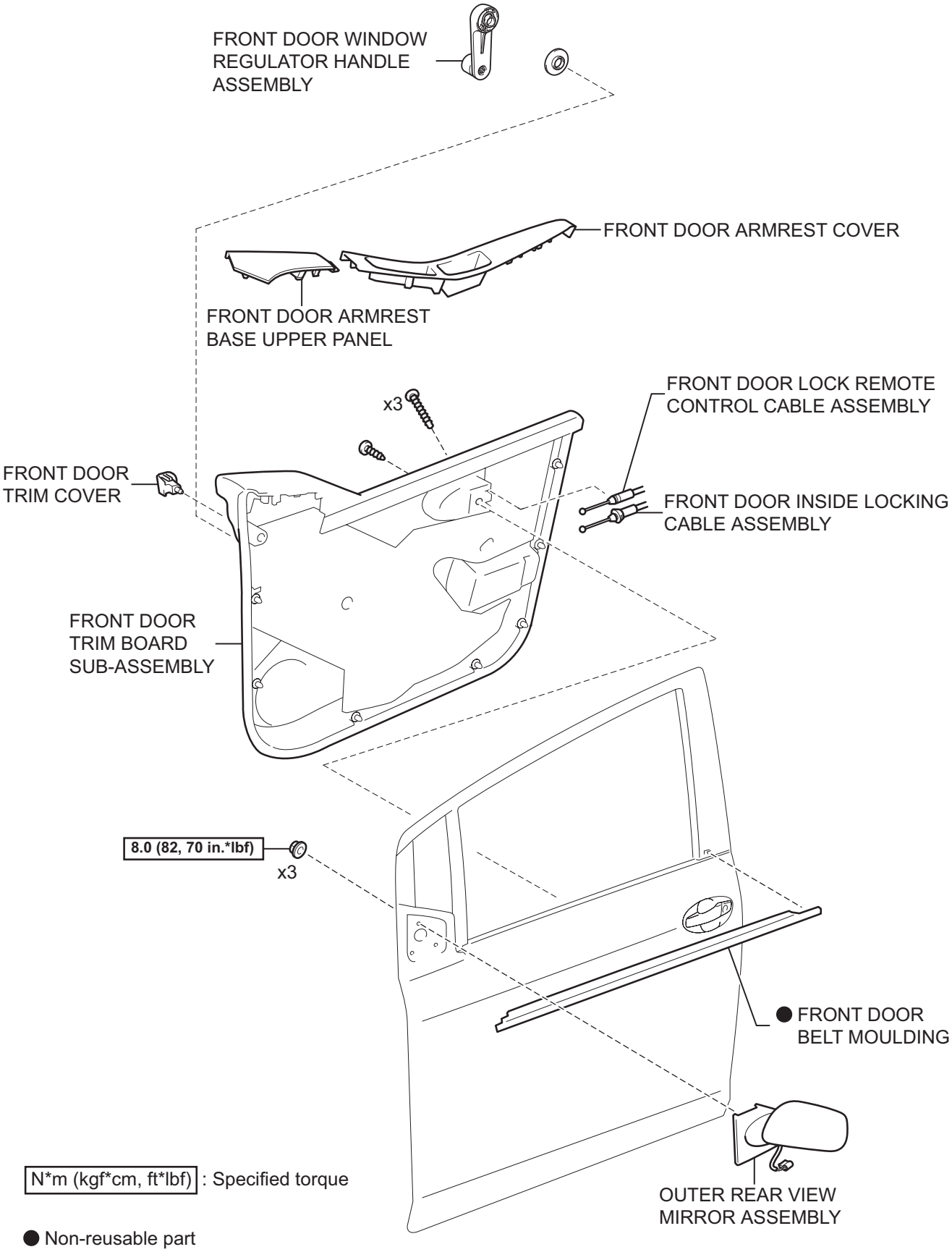

N*m (kgf*cm, ft*lbf) : Specified torque

● Non-reusable part

T

B114396E02

ET

w/ Power Window on 3 Door:

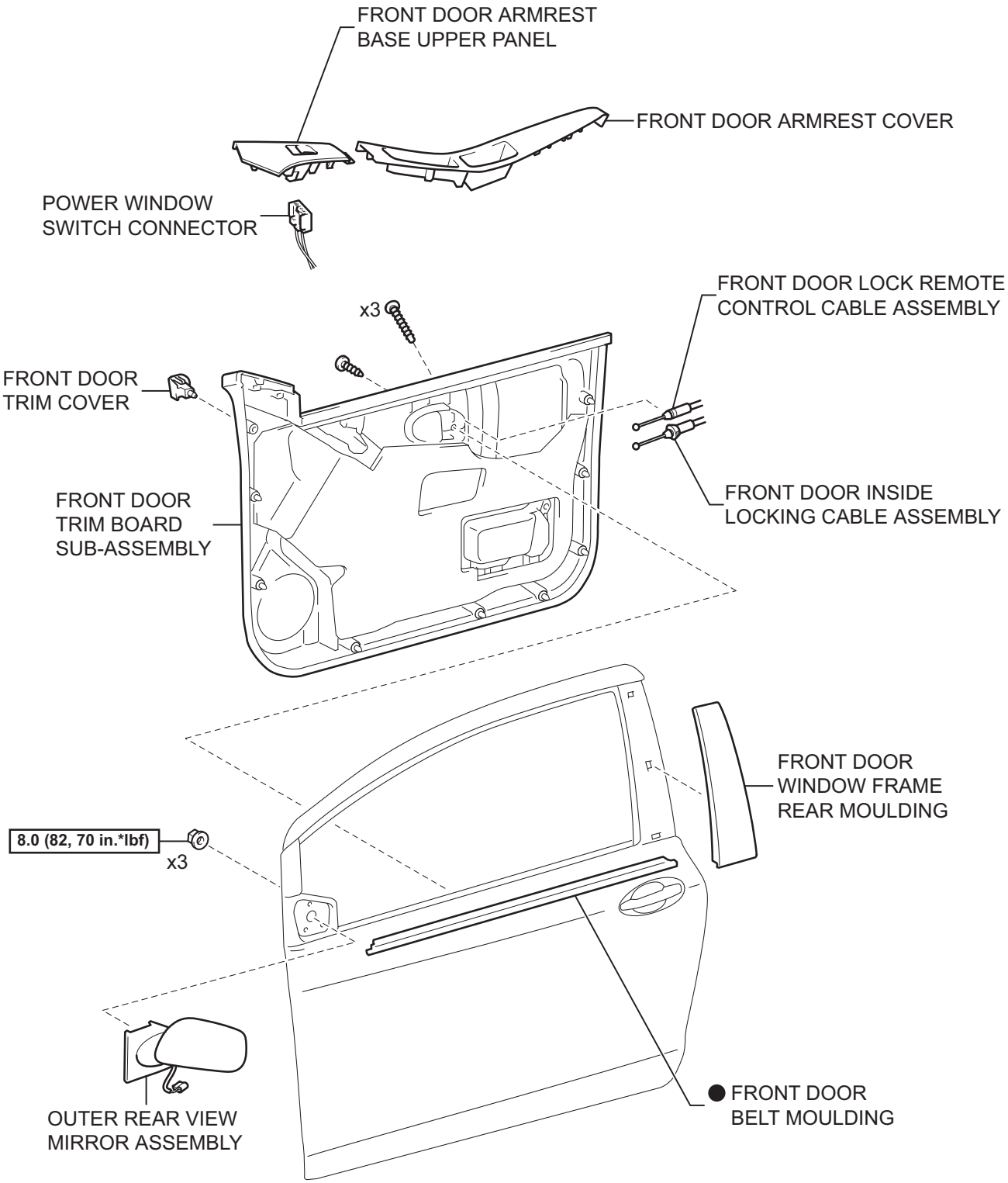

N*m (kgf*cm, ft*lbf) : Specified torque

● Non-reusable part

T

B114610E02

ET

w/o Power Window on 3 Door:

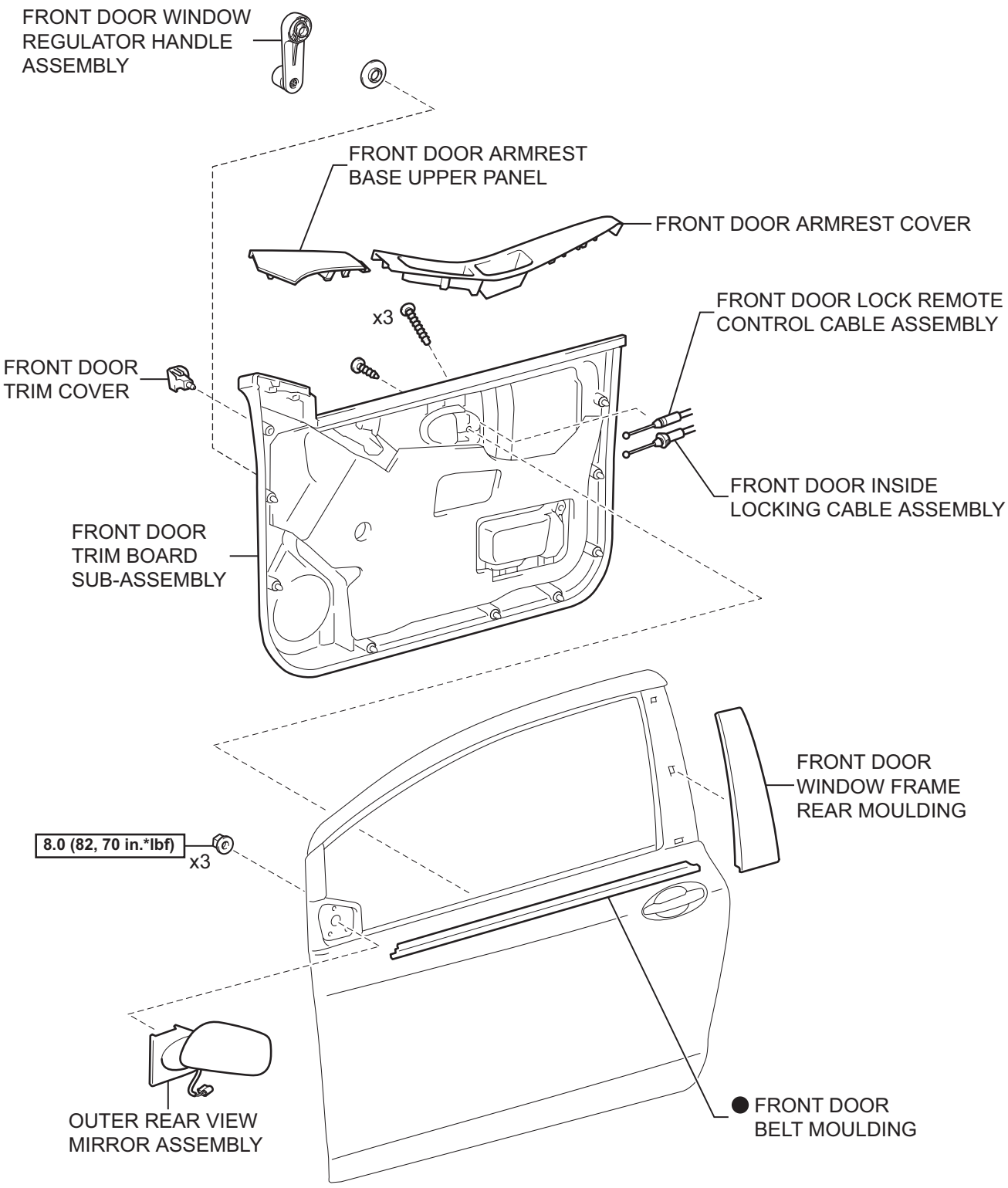

N*m (kgf*cm, ft*lbf) : Specified torque

● Non-reusable part

T

B114611E02

ET

REMOVAL

HINT:
The procedure described below is for the LH side. Use the same procedure for both the RH and LH sides, unless otherwise specified.

1. **DISCONNECT CABLE FROM NEGATIVE BATTERY TERMINAL (w/ Power Window)**
2. **REMOVE FRONT DOOR ARMREST COVER (See page ED-33)**
3. **REMOVE FRONT DOOR ARMREST BASE UPPER PANEL**
   (a) w/ Power Window:
      (1) Remove the front door armrest base upper panel (See page ED-33).
   (b) w/o Power Window:
      (1) Remove the front door armrest base upper panel (See page ED-57).
4. **REMOVE FRONT DOOR WINDOW REGULATOR HANDLE ASSEMBLY (w/o Power Window) (See page ED-57)**
5. **REMOVE FRONT DOOR TRIM BOARD SUB-ASSEMBLY**
   (a) w/ Power Window:
      (1) Remove the front door trim board sub-assembly (See page ED-34).
   (b) w/o Power Window:
      (1) Remove the front door trim board sub-assembly (See page ED-58).
6. **REMOVE OUTER REAR VIEW MIRROR ASSEMBLY (See page MI-13)**
7. **REMOVE FRONT DOOR WINDOW FRAME REAR MOULDING (for 3 Door) (See page ET-114)**
8. **REMOVE FRONT DOOR BELT MOULDING**
   (a) for 5 Door:
      (1) Apply protective tape to the door panel in the area around the front door belt moulding.

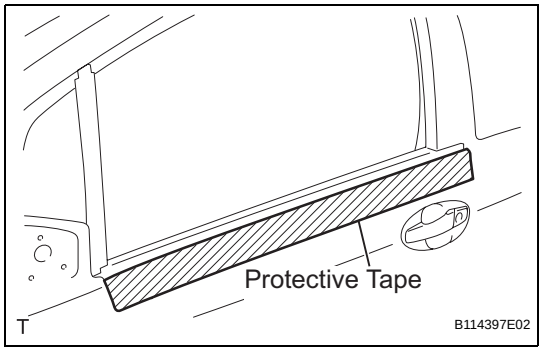

ET

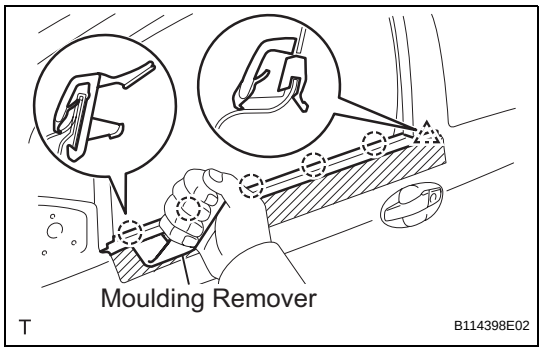

(2) Using a moulding remover, disengage the 5 claws and the clip and remove the front door belt moulding.

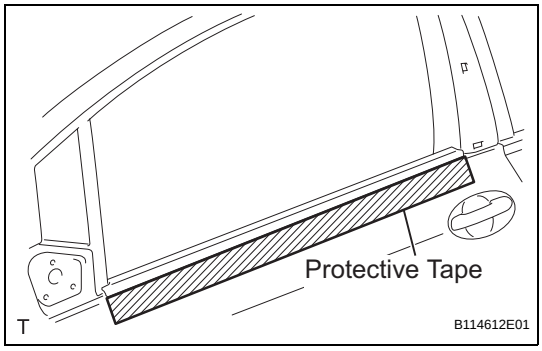

(b) for 3 Door:

(1) Apply protective tape to the door panel in the area around the front door belt moulding.

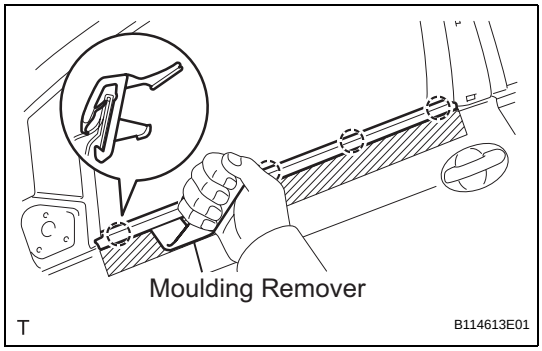

(2) Using a moulding remover, disengage the 5 claws and remove the front door belt moulding.

INSTALLATION

HINT:
The procedure described below is for the LH side. Use the same procedure for both the RH and LH sides, unless otherwise specified.

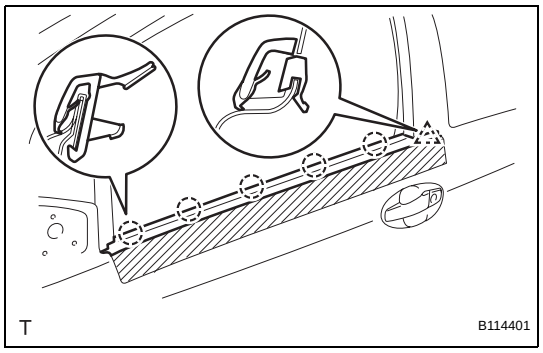

1. INSTALL FRONT DOOR BELT MOULDING

(a) for 5 Door:

(1) Engage the 5 claws and the clip and install a new front door belt moulding.

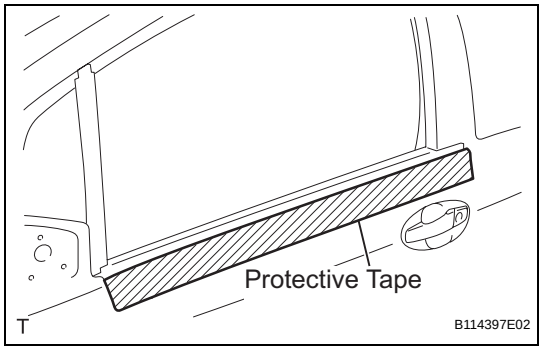

(2) Remove the protective tape.

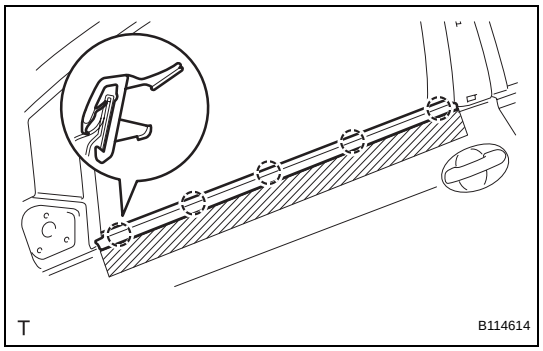

(b) for 3 Door:

(1) Engage the 5 claws and the clip and install a new front door belt moulding.

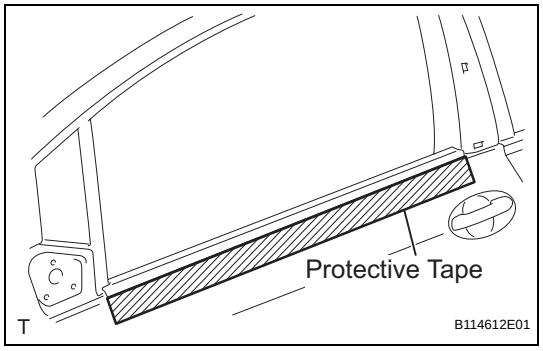

(2) Remove the protective tape.

2. INSTALL FRONT DOOR WINDOW FRAME REAR MOULDING (for 3 Door) (See page ET-114)

3. INSTALL OUTER REAR VIEW MIRROR ASSEMBLY (See page MI-16)

4. INSTALL FRONT DOOR TRIM BOARD SUB-ASSEMBLY

(a) w/ Power Window:

(1) Install the front door trim board sub-assembly (See page ED-51).

(b) w/o Power Window:

(1) Install the front door trim board sub-assembly (See page ED-74).

5. **INSTALL FRONT DOOR WINDOW REGULATOR HANDLE ASSEMBLY (w/o Power Window) (See page ED-75)**

6. **INSTALL FRONT DOOR ARMREST BASE UPPER PANEL**
   (a) w/ Power Window:
      (1) Install the front door armrest base upper panel (See page ED-53).
   (b) w/o Power Window:
      (1) Install the front door armrest base upper panel (See page ED-74).

7. **INSTALL FRONT DOOR ARMREST COVER (See page ED-53)**

8. **CONNECT CABLE TO NEGATIVE BATTERY TERMINAL (w/ Power Window)**
   Torque: 5.4 N*m (55 kgf*cm, 48 in.*lbf)

REAR DOOR BELT MOULDING (for Sedan)

COMPONENTS

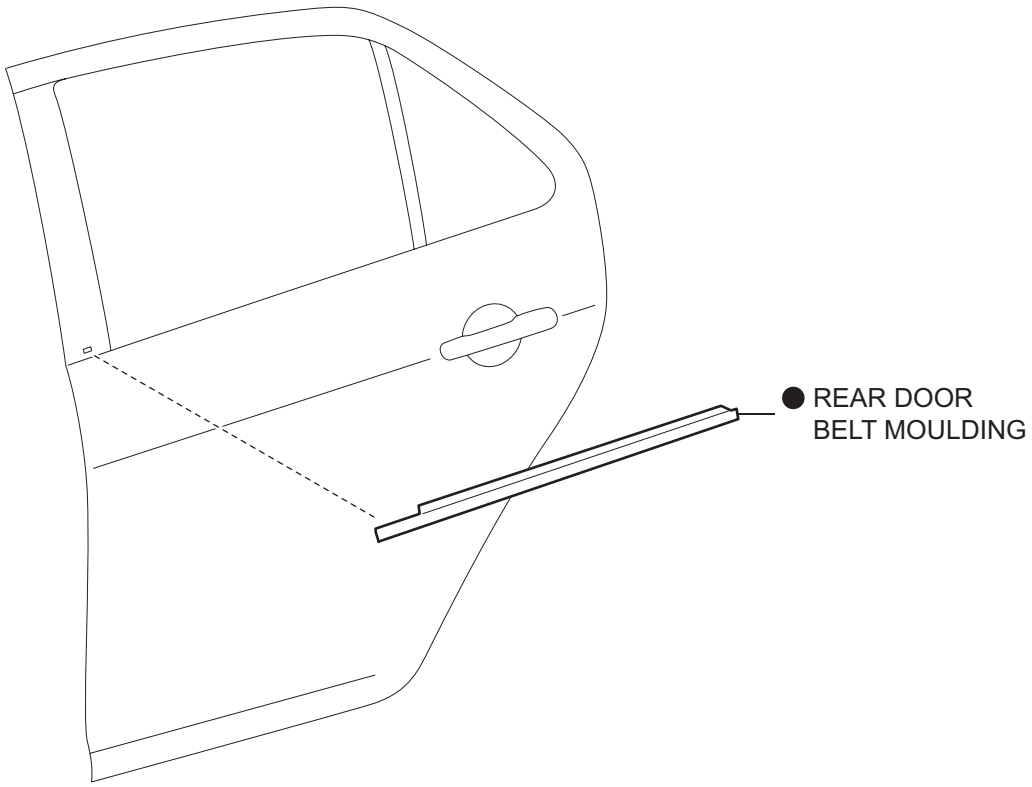

● Non-reusable part

T

B134879E02

REMOVAL

HINT:
The procedure described below is for the LH side. Use the same procedure for both the RH and LH sides, unless otherwise specified.

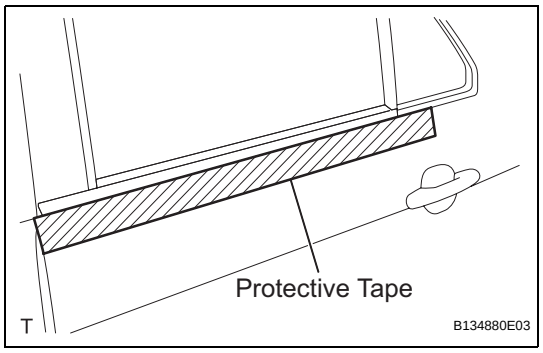

1. REMOVE REAR DOOR BELT MOULDING

(a) Apply protective tape to the door panel in the periphery of the rear door belt moulding.

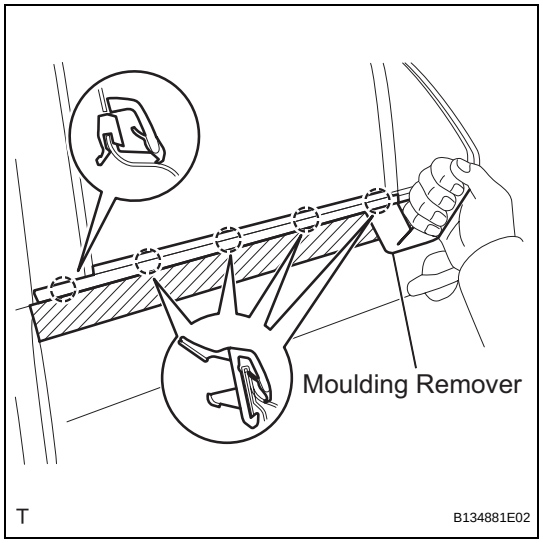

(b) Using a moulding remover, disengage the 5 claws and remove the rear door belt moulding.

INSTALLATION

HINT:
The procedure described below is for the LH side. Use the same procedure for both the RH and LH sides, unless otherwise specified.

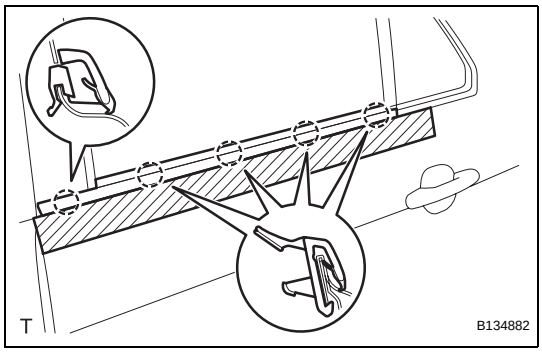

1. INSTALL REAR DOOR BELT MOULDING

(a) Engage the 5 claws and install a new rear door belt moulding.

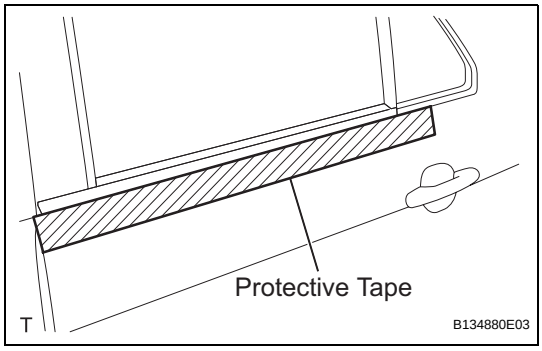

(b) Remove the protective tape.

REAR DOOR BELT MOULDING (for Hatchback)

COMPONENTS

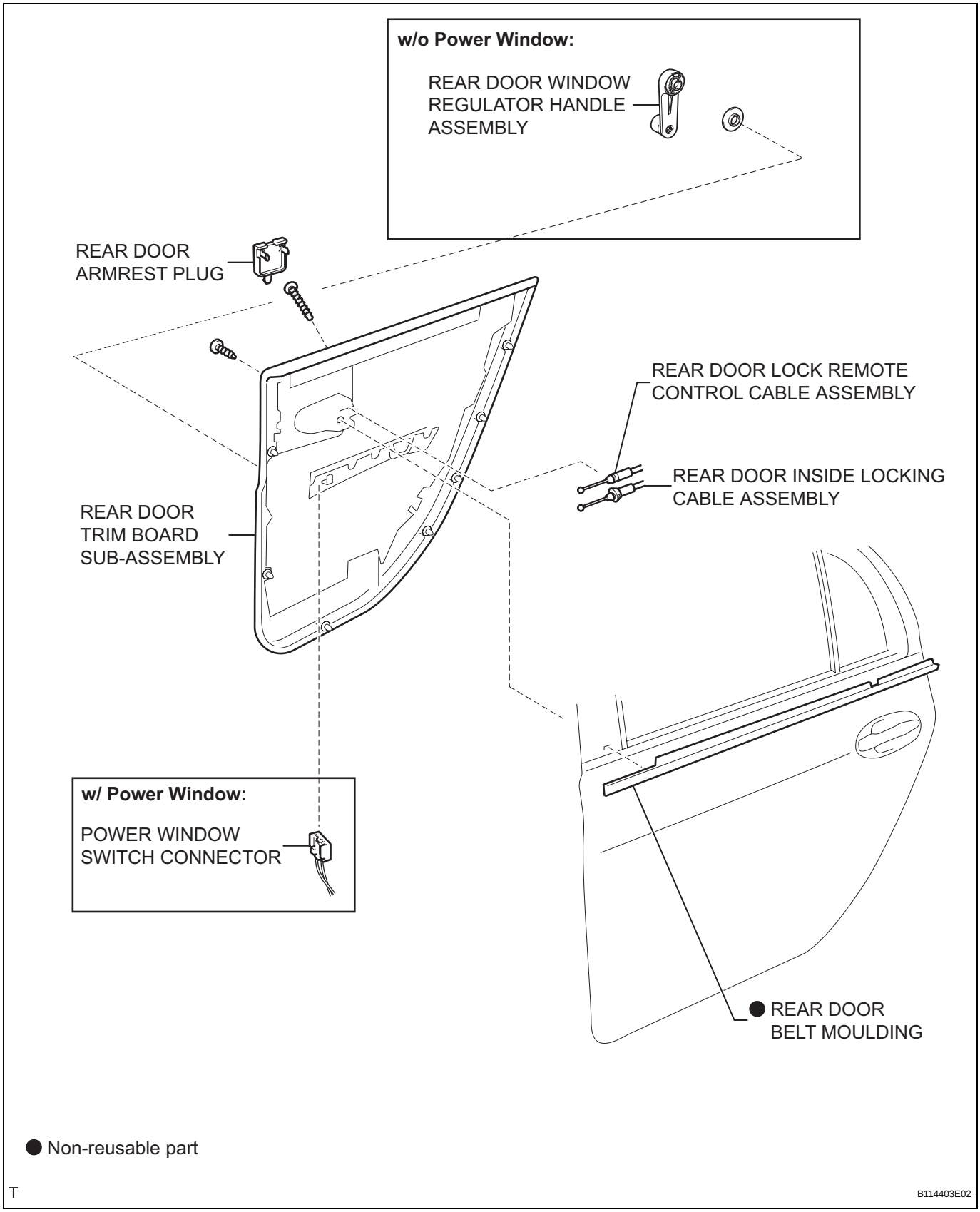

REMOVAL

HINT:
The procedure described below is for the LH side. Use the same procedure for both the RH and LH sides, unless otherwise specified.

1. DISCONNECT CABLE FROM NEGATIVE BATTERY TERMINAL (w/ Power Window)

2. REMOVE REAR DOOR WINDOW REGULATOR HANDLE ASSEMBLY (w/o Power Window) (See page ED-115)

3. REMOVE REAR DOOR TRIM BOARD SUB-ASSEMBLY

(a) w/ Power Window:
(1) Remove the rear door trim board sub-assembly (See page ED-98).

(b) w/o Power Window:
(1) Remove the rear door trim board sub-assembly (See page ED-115).

4. REMOVE REAR DOOR BELT MOULDING

(a) Apply protective tape to the door panel in the area around the rear door belt moulding.

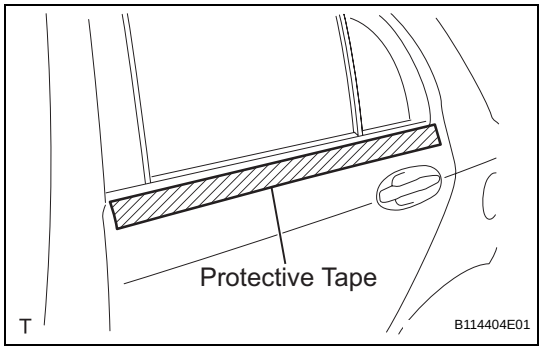

(b) Using a moulding remover, disengage the 5 claws and the clip and remove the rear door belt moulding.

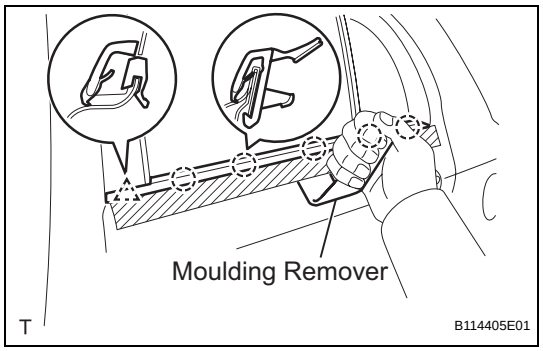

INSTALLATION

HINT:
The procedure described below is for the LH side. Use the same procedure for both the RH and LH sides, unless otherwise specified.

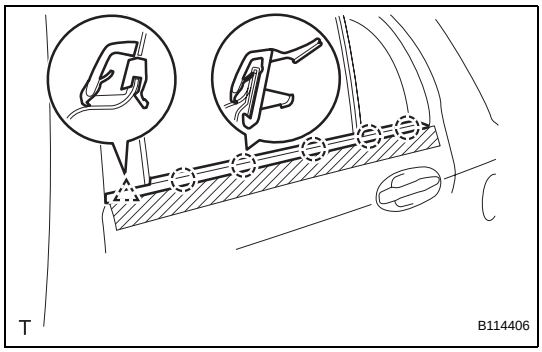

1. INSTALL REAR DOOR BELT MOULDING

(a) Engage the 5 claws and the clip and install a new rear door belt moulding.

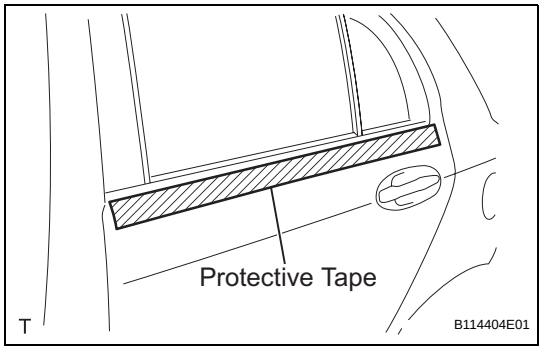

(b) Remove the protective tape.

2. INSTALL REAR DOOR TRIM BOARD SUB-ASSEMBLY

(a) w/ Power Window:
(1) Install the rear door trim board sub-assembly (See page ED-111).

(b) w/o Power Window:
(1) Install the rear door trim board sub-assembly (See page ED-127).

3. INSTALL REAR DOOR WINDOW REGULATOR HANDLE ASSEMBLY (w/o Power Window) (See page ED-128)

4. CONNECT CABLE TO NEGATIVE BATTERY TERMINAL (w/ Power Window)
Torque: 5.4 N*m (55 kgf*cm, 48 in.*lbf)

FRONT PILLAR UPPER COVER (for Sedan)

COMPONENTS

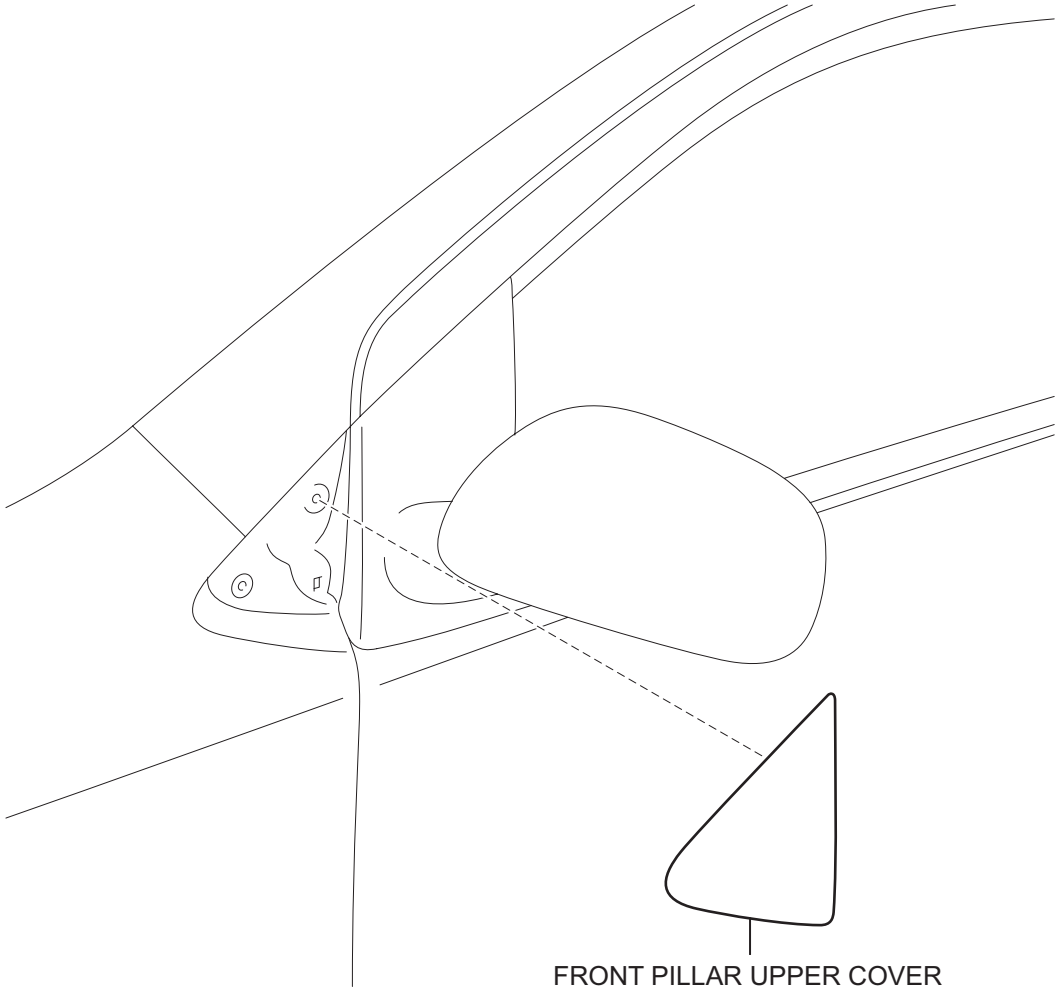

T

B134845E01

REMOVAL

HINT:
The procedure described below is for the LH side. Use the same procedure for both the RH and LH sides, unless otherwise specified.

1. REMOVE FRONT PILLAR UPPER COVER

(a) Apply protective tape, as shown in the illustration.

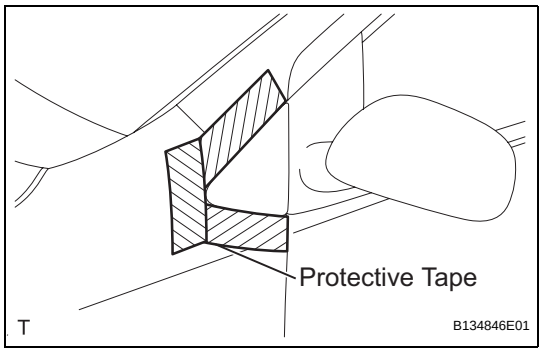

(b) Using a moulding remover, disengage the 2 clips and the claw and remove the front pillar upper cover.

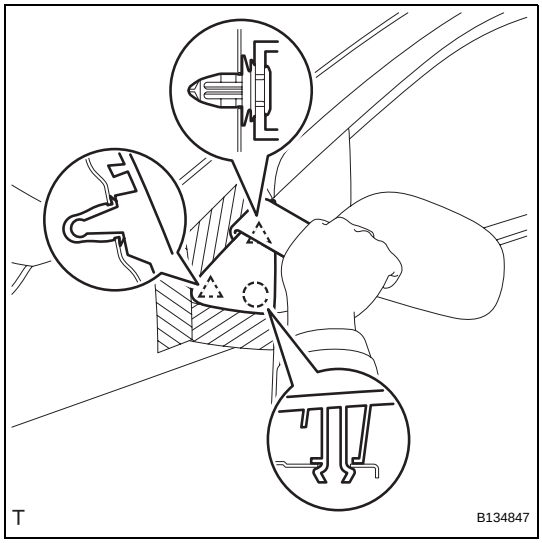

INSTALLATION

HINT:
The procedure described below is for the LH side. Use the same procedure for both the RH and LH sides, unless otherwise specified.

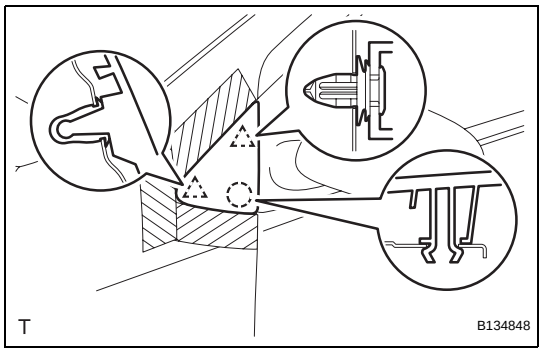

1. INSTALL FRONT PILLAR UPPER COVER

(a) Engage the 2 clips and the claw and install the front pillar upper cover.

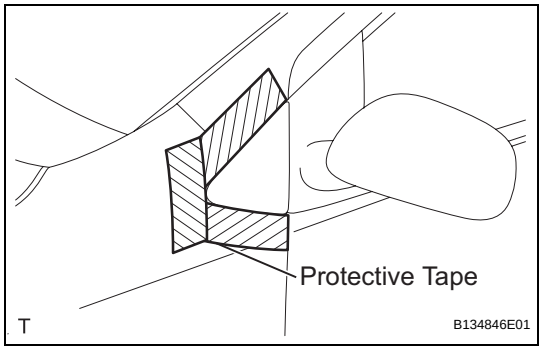

(b) Remove the protective tape.

FRONT PILLAR UPPER COVER (for Hatchback)

COMPONENTS

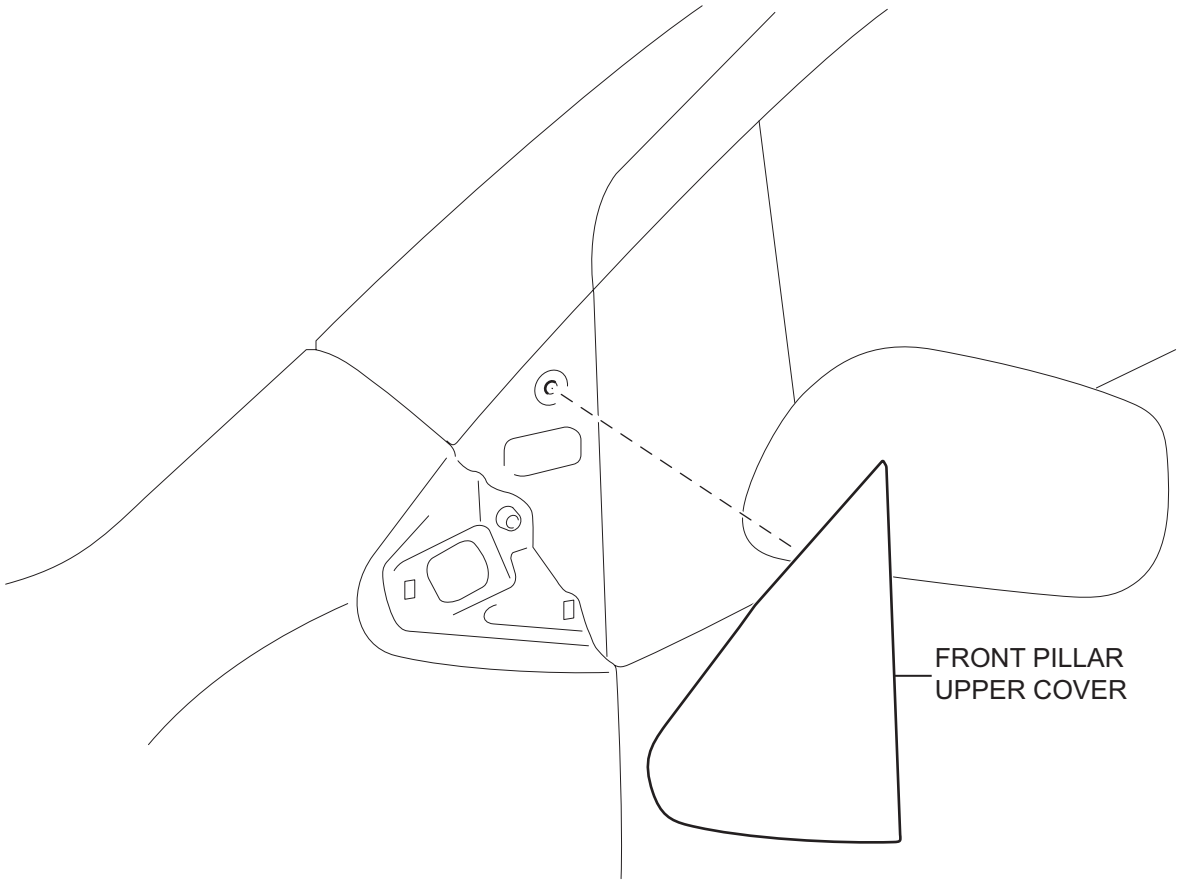

T

B114407E01

REMOVAL

HINT:
The procedure described below is for the LH side. Use the same procedure for both the RH and LH sides, unless otherwise specified.

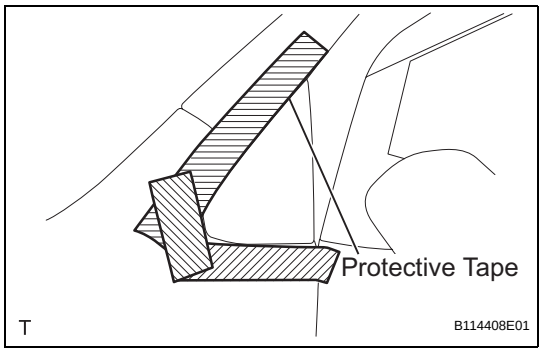

1. REMOVE FRONT PILLAR UPPER COVER

(a) Apply protective tape to the body panel in the area around the front pillar upper cover.

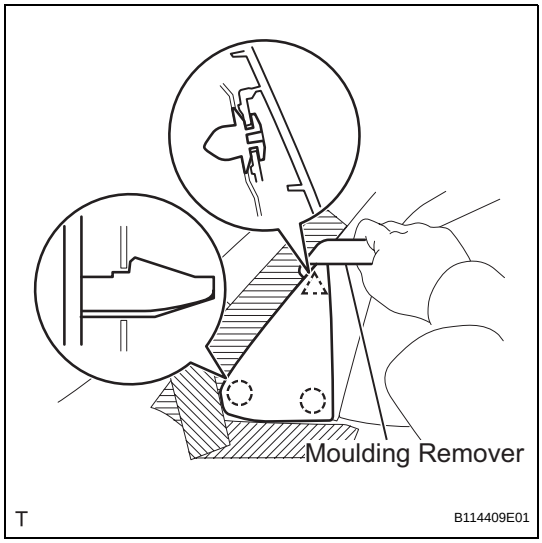

(b) Using a moulding remover, disengage the 2 claws and the clip and remove the front pillar upper cover.

INSTALLATION

HINT:
The procedure described below is for the LH side. Use the same procedure for both the RH and LH sides, unless otherwise specified.

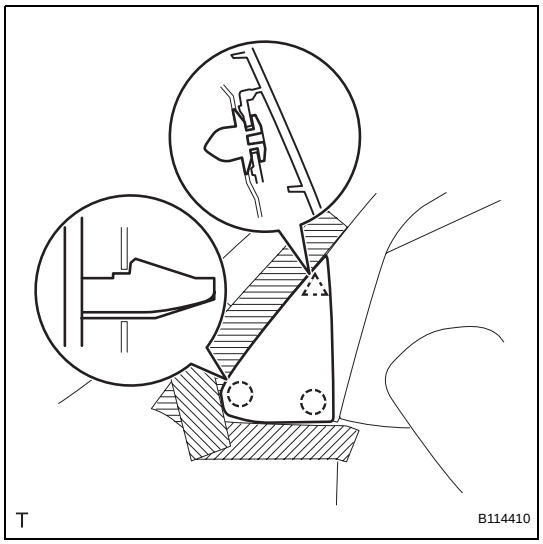

1. INSTALL FRONT PILLAR UPPER COVER

(a) Engage the 2 claws and the clip and install the front pillar upper cover.

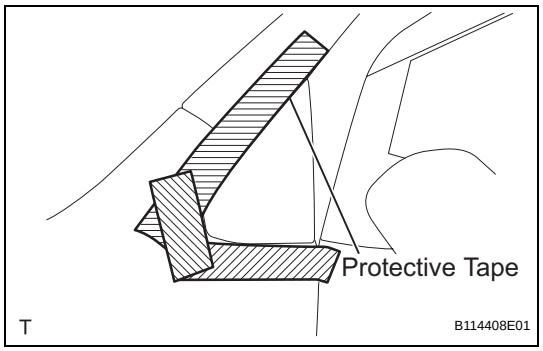

(b) Remove the protective tape.

ROOF DRIP SIDE FINISH MOULDING (for Sedan)

COMPONENTS

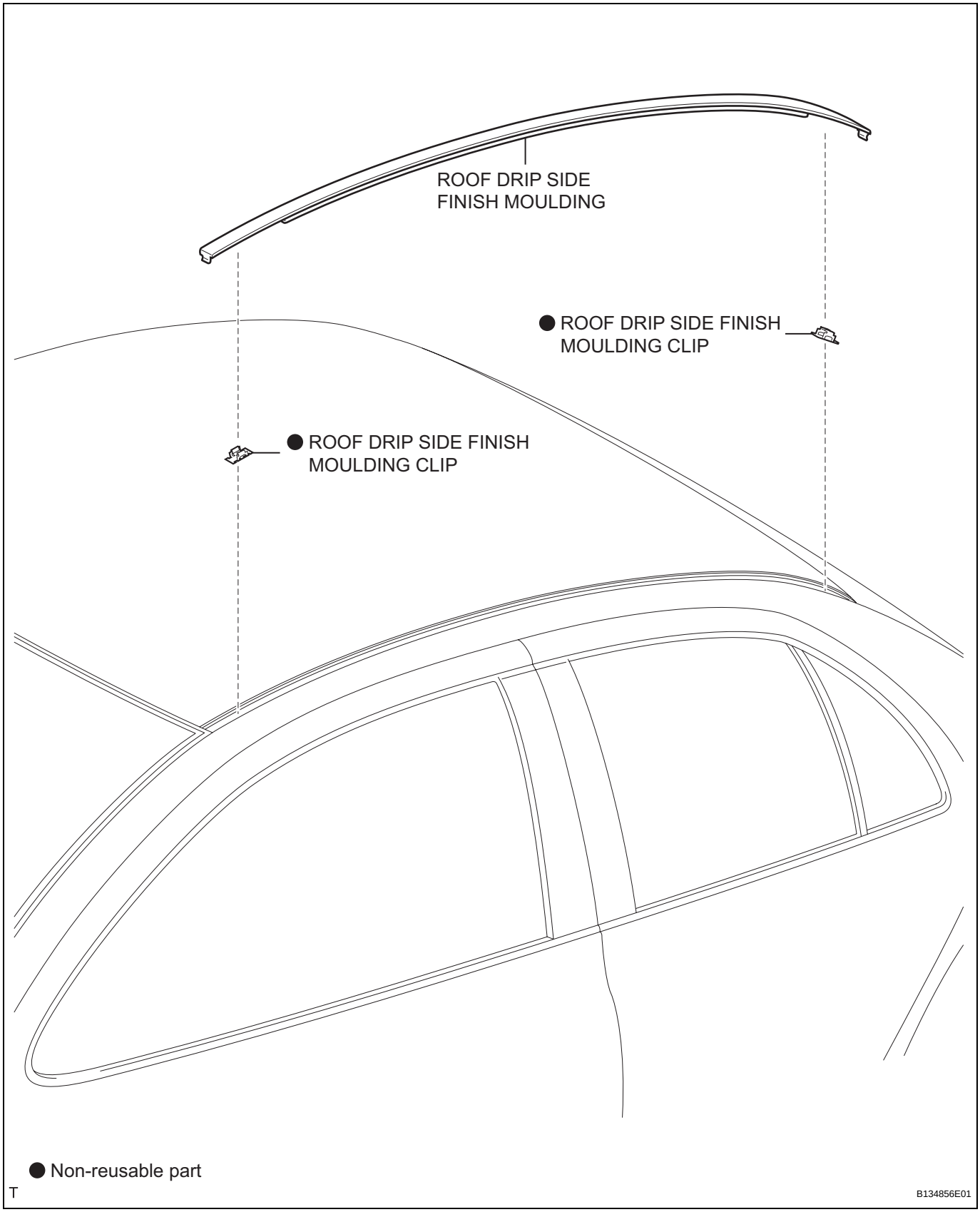

REMOVAL

HINT:
The procedure described below is for LH side. Use the same procedure for both the RH and LH sides, unless otherwise specified.

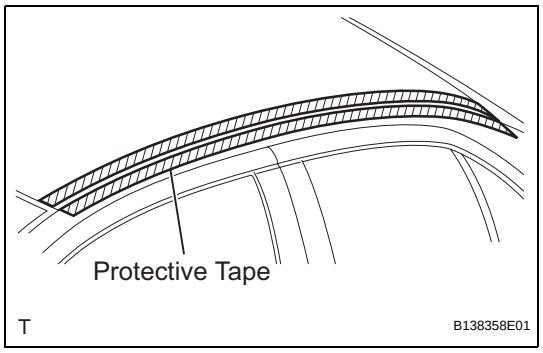

1. REMOVE ROOF DRIP SIDE FINISH MOULDING

(a) Apply protective tape, as shown in the illustration.

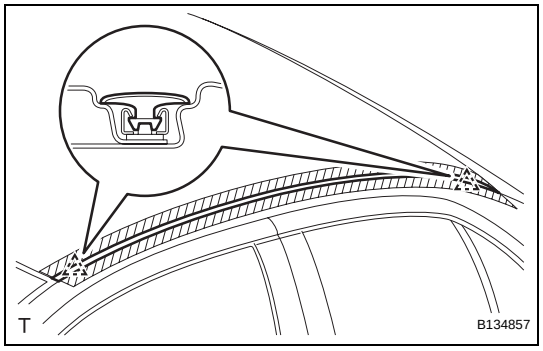

(b) Disengage the 2 clips and remove the roof drip side finish moulding.

NOTICE:

- **Do not remove the clips.**
- **Replace the clips with supply clips if damaged.**

INSTALLATION

HINT:
The procedure described below is for LH side. Use the same procedure for both the RH and LH sides, unless otherwise specified.

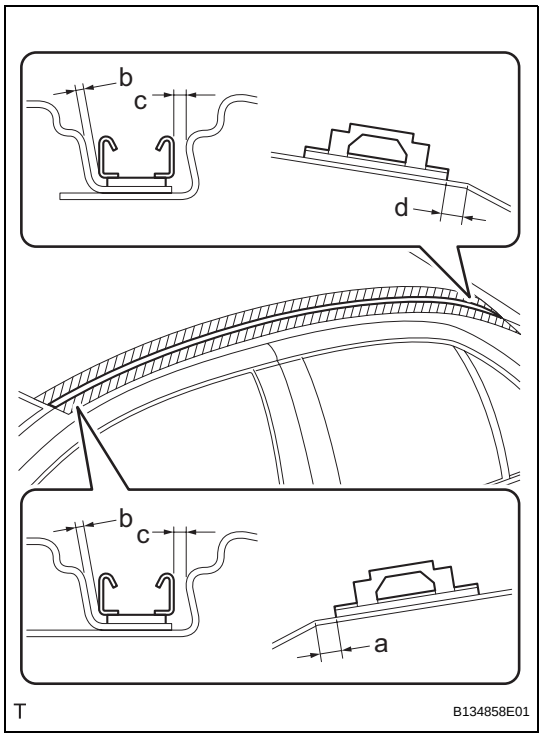

1. INSTALL ROOF DRIP SIDE FINISH MOULDING CLIP

NOTICE:
Follow these procedures only when replacing the clips.

(a) Remove the tape that remains on the moulding surface of the vehicle body, then clean the surface with a non-residue solvent.

(b) Using an infrared light, heat the clip installation surface of the vehicle body.
Heating Temperature

Area	Temperature
Vehicle Body	40 to 60°C (104 to 140°F)

NOTICE:
Do not excessively heat the vehicle body.

(c) Install new clips in the positions shown in the illustration. Press in the clips by hand.
Specification

Area	Measurement
a	3.5 mm (0.138 in.)
b	1.1 mm (0.043 in.)
c	1.8 mm (0.071 in.)
d	2.3 mm (0.091 in.)

NOTICE:
After pressing in the clips, wait 30 minutes or more before installing the roof drip side finish moulding.

HINT:
- Minimum hardening time: 30 minutes
- Time needed for complete hardening: 24 hours

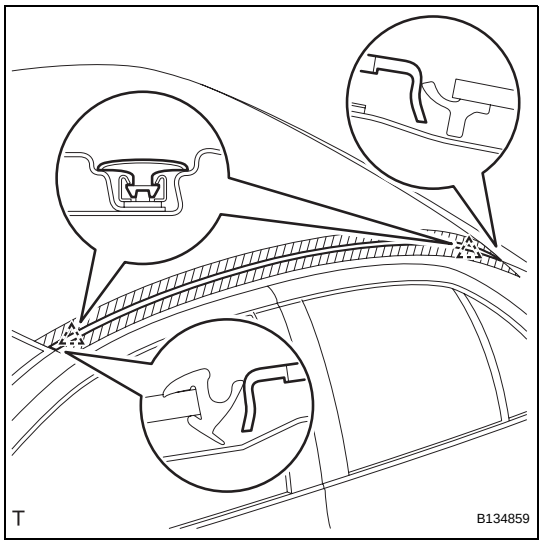

2. INSTALL ROOF DRIP SIDE FINISH MOULDING

(a) Engage the 2 clips and install the roof drip side finish moulding.

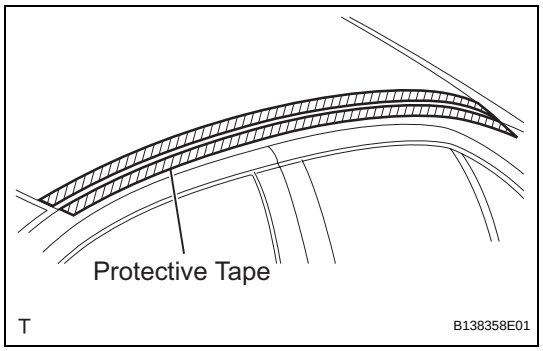

(b) Remove the protective tape.

ROOF DRIP SIDE FINISH MOULDING (for Hatchback)

COMPONENTS

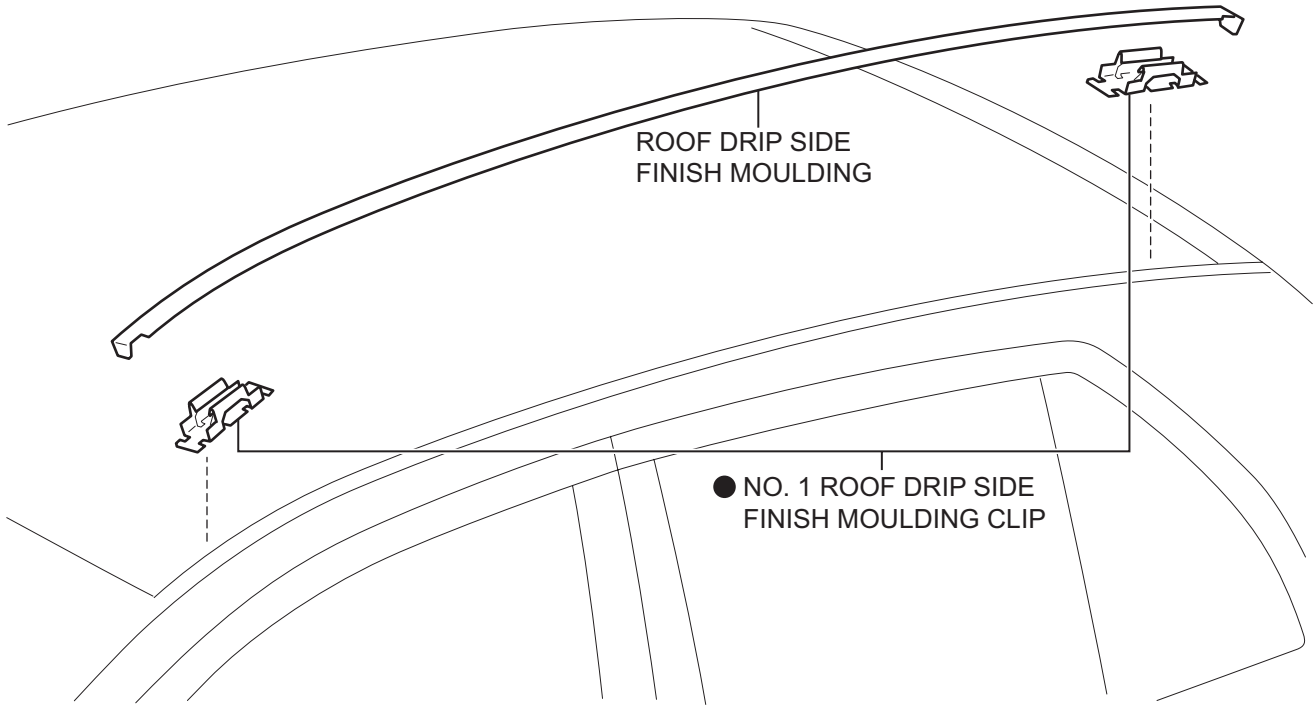

● Non-reusable part

T

B114411E01

REMOVAL

HINT:
The procedure described below is for the LH side. Use the same procedure for both the RH and LH sides, unless otherwise specified.

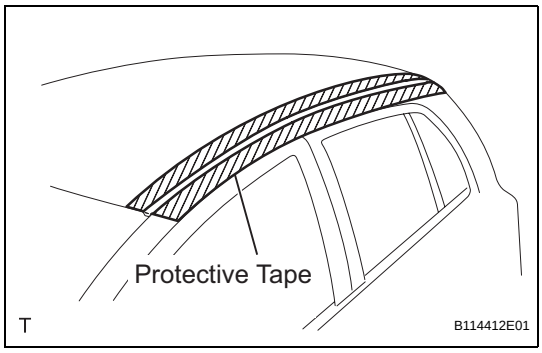

1. REMOVE ROOF DRIP SIDE FINISH MOULDING

(a) Apply protective tape to the roof panel in the area around the roof drip side finish moulding.

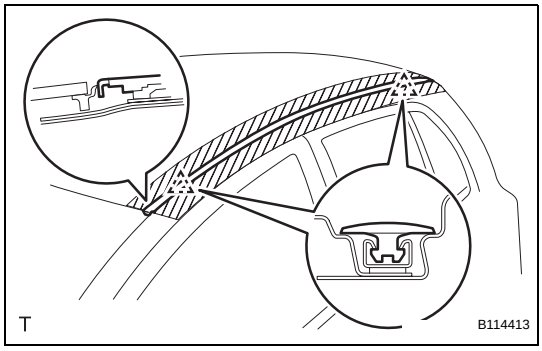

(b) Disengage the 2 clips and remove the roof drip side finish moulding.

NOTICE:

- **Do not remove the clips.**
- **Replace the clips with supply clips if damaged.**

INSTALLATION

HINT:
The procedure described below is for the LH side. Use the same procedure for both the RH and LH sides, unless otherwise specified.

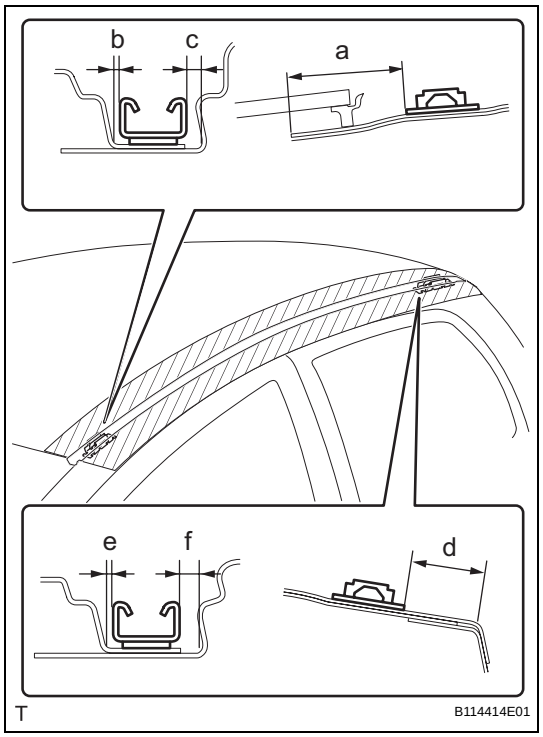

1. INSTALL NO. 1 ROOF DRIP SIDE FINISH MOULDING CLIP

NOTICE:
Only follow this procedure when replacing the clips.

(a) Remove the tape that remains on the moulding surface of the vehicle body, then clean the surface with a non-residue solvent.

(b) Using an infrared light, heat the clip installation surface of the vehicle body and roof drip side finish moulding.
Heating Temperature

Area	Temperature
Vehicle Body	40 to 60°C (104 to 140°F)
Roof Drip Side Finish Moulding	20 to 30°C (68 to 86°F)

NOTICE:
Do not excessively heat the vehicle body or roof drip side finish moulding.

(c) Install new clips in the positions shown in the illustration. Press in the clips by hand.
Specification

Area	Measurement
a	35.4 mm (1.394 in.)
b	0.8 mm (0.032 in.)
c	1.6 mm (0.063 in.)
d	24 mm (0.945 in.)
e	0.5 mm (0.02 in.)
f	2.7 mm (0.106 in.)

NOTICE:
After pressing in the clips, wait 30 minutes or more before installing the roof drip side finish moulding.

HINT:
- Minimum hardening time: 30 minutes
- Time needed for complete hardening: 24 hours

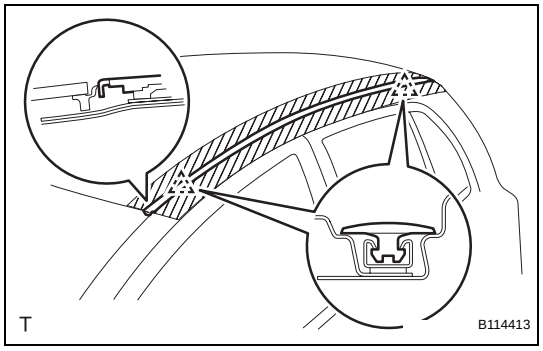

2. INSTALL ROOF DRIP SIDE FINISH MOULDING

(a) Engage the 2 clips and install the roof drip side finish moulding.

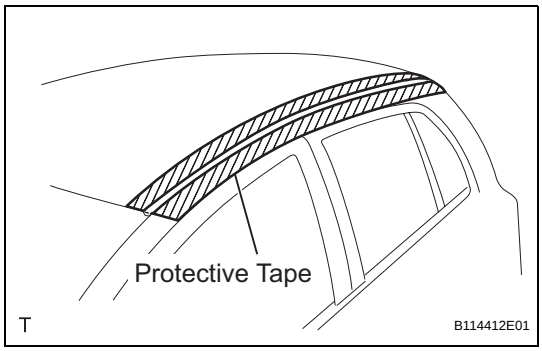

(b) Remove the protective tape.

SIDE MUDGUARD (for Hatchback)

COMPONENTS

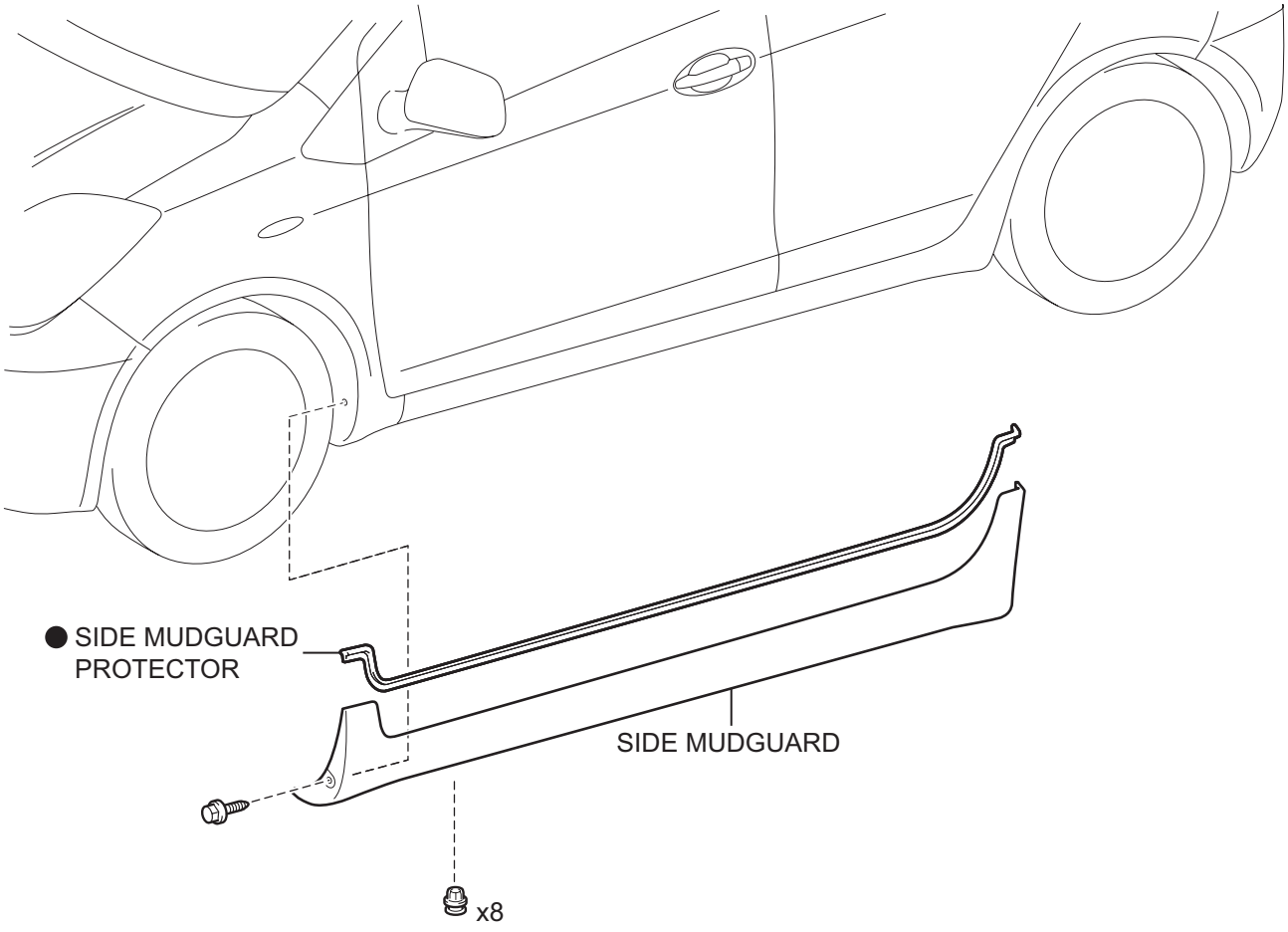

● Non-reusable part

T

B114586E02

REMOVAL

HINT:
The procedure described below is for the LH side. Use the same procedure for both the RH and LH sides, unless otherwise specified.

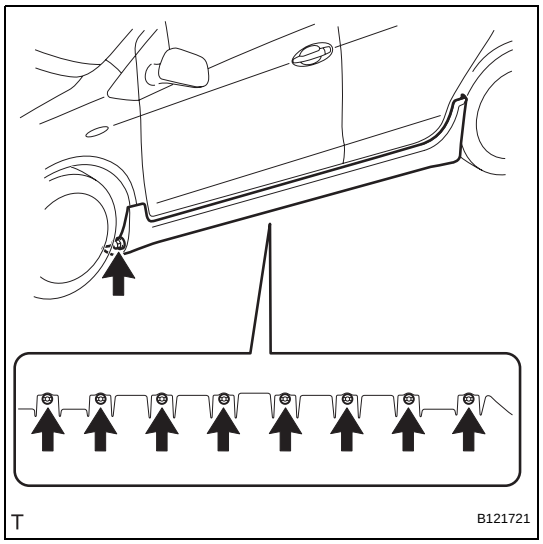

1. REMOVE SIDE MUDGUARD

(a) Remove the screw.

(b) Using a clip remover, remove the 8 retainers.

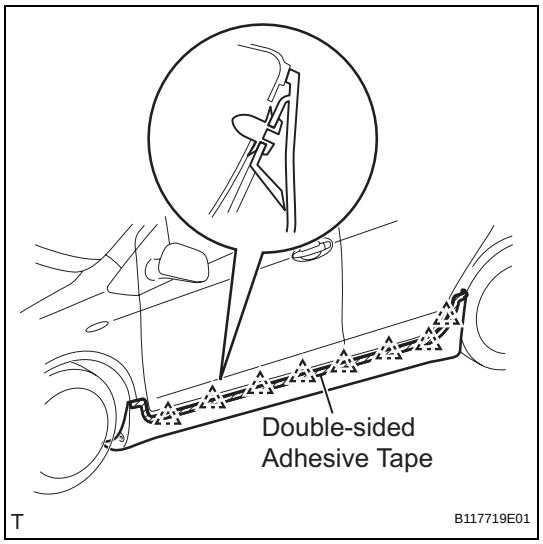

(c) Using an infrared light, heat the side mudguard protector.

(d) Disengage the 8 clips and remove the double-sided adhesive tape of the side mudguard protector, and remove the side mudguard.

INSTALLATION

HINT:
The procedure described below is for the LH side. Use the same procedure for both the RH and LH sides, unless otherwise specified.

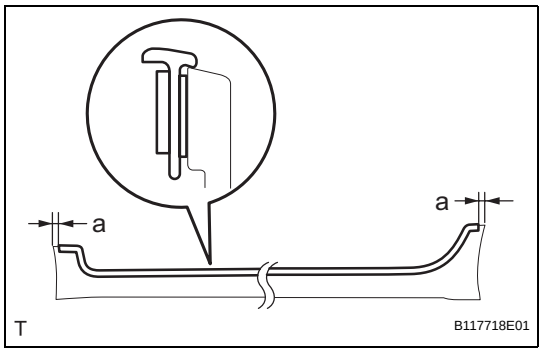

1. INSTALL SIDE MUDGUARD PROTECTOR

(a) Install a new side mudguard protector onto the side mudguard.
Installation position:

Mark	Measurement
a	1 mm (0.039 in.)

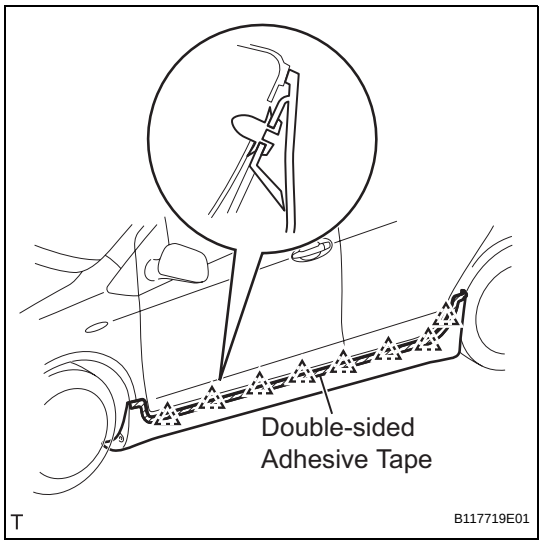

2. INSTALL SIDE MUDGUARD

(a) Engage the 8 clips and install the side mudguard.
(b) Press the double-sided adhesive tape of the side mudguard protector.

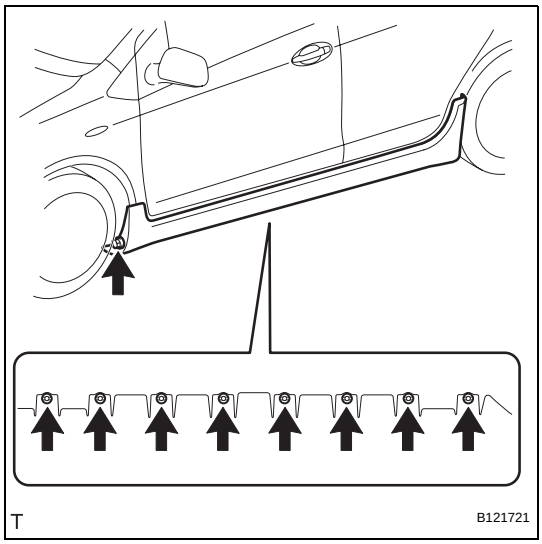

(c) Install the 8 retainers.
(d) Tighten the screw.

FRONT DOOR WINDOW FRAME MOULDING (for Hatchback)

COMPONENTS

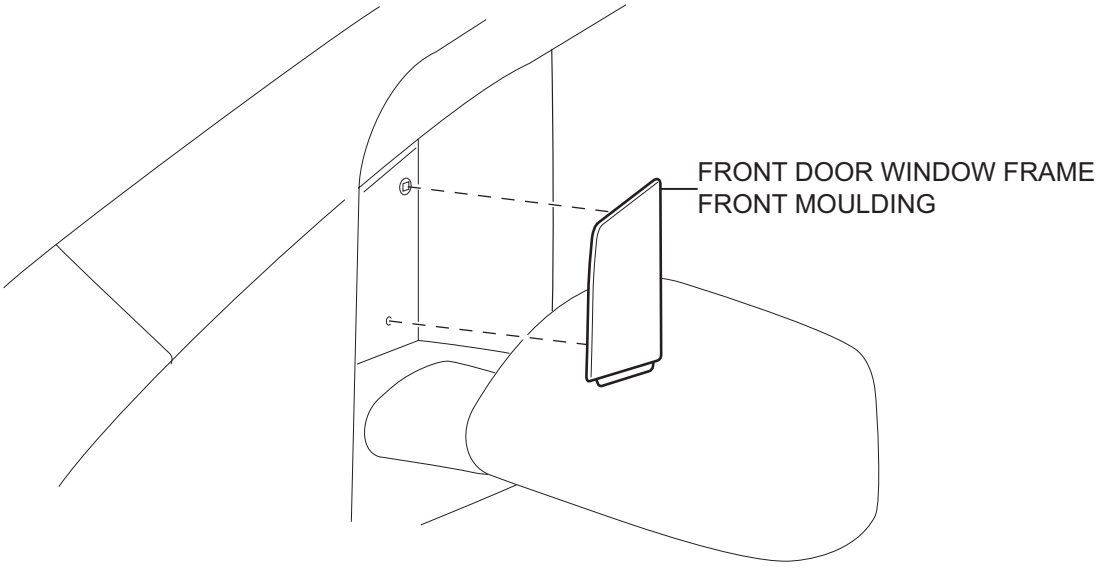

for 3 Door:

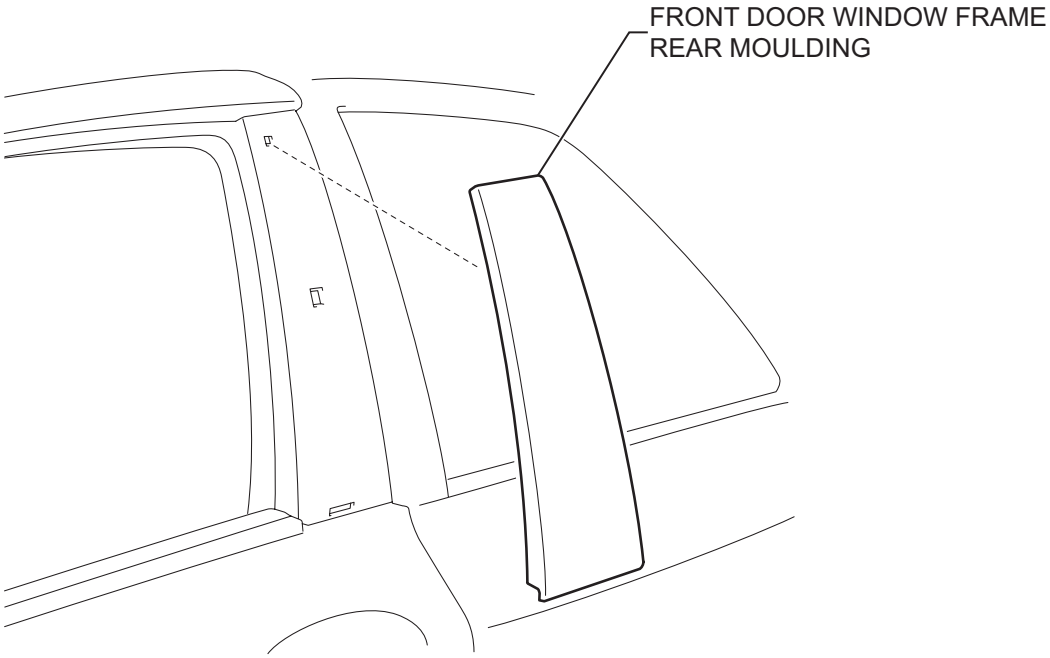

T

B114604E01

REMOVAL

HINT:
The procedure described below is for the LH side. Use the same procedure for both the RH and LH sides, unless otherwise specified.

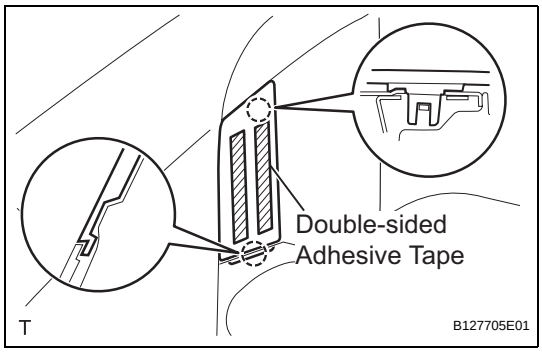

1. REMOVE FRONT DOOR WINDOW FRAME FRONT MOULDING

(a) Using an infrared light, heat the front door window frame front moulding.
NOTICE:
Do not burn yourself with the heated front door panel or infrared light.
HINT:
Heat at 40 to 60°C (104 to 140°F) for 3 to 5 minutes.

(b) Disengage the 2 claws and remove the double-sided adhesive tape and the front door window frame front moulding.

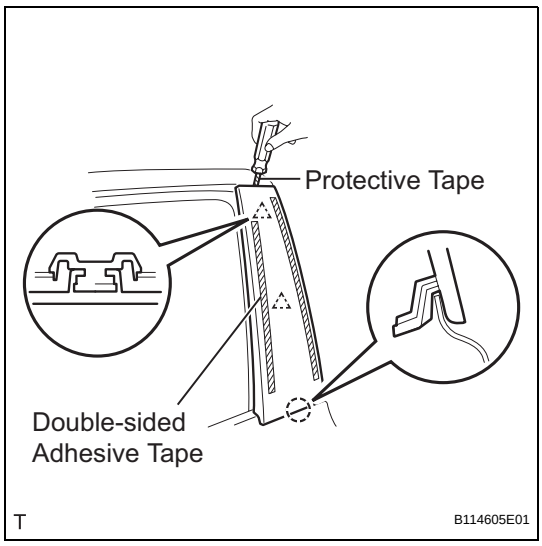

2. REMOVE FRONT DOOR WINDOW FRAME REAR MOULDING (for 3 Door)

(a) Using an infrared light, heat the front door window frame rear moulding.
NOTICE:
Do not burn yourself with the heated front door panel or infrared light.
HINT:
Heat at 40 to 60°C (104 to 140°F) for 3 to 5 minutes.

(b) Using a screwdriver with its tip wrapped in protective tape, disengage the 2 clips and the claw and remove the double-sided adhesive tape and the front door window frame rear moulding.

INSTALLATION

HINT:
The procedure described below is for the LH side. Use the same procedure for both the RH and LH sides, unless otherwise specified.

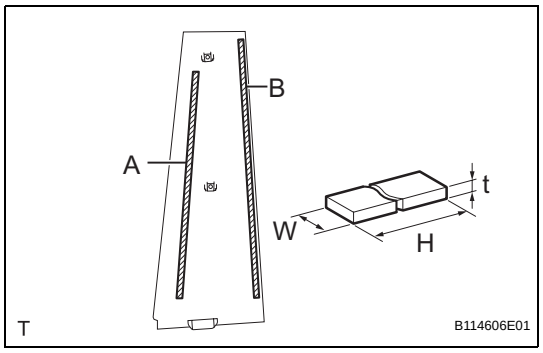

1. INSTALL FRONT DOOR WINDOW FRAME REAR MOULDING (for 3 Door)

(a) Clean the attachment surface.

(1) Using an infrared light, heat the adhesive remaining on the body.
NOTICE:
Do not burn yourself with the heated body or infrared light.

(2) Using a shop rag or piece of cloth, rub the remaining adhesive off the body.

(3) Using a non-residue solvent, clean the attachment surface.

(b) Apply new double-sided adhesive tape to the front door window frame rear moulding.
Tape Size:

Area	t	W	H
A	0.8 mm (0.032 in.)	5 mm (0.197 in.)	340 mm (13.386 in.)
B	0.8 mm (0.032 in.)	5 mm (0.197 in.)	376 mm (14.803 in.)

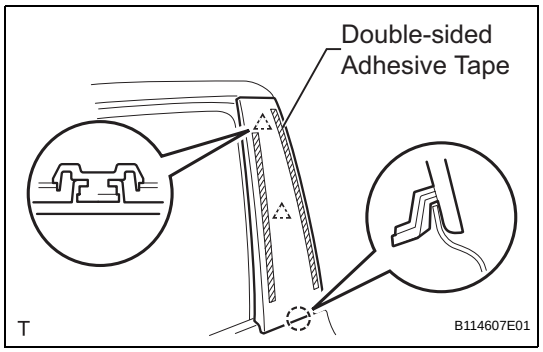

(c) Engage the 2 clips and the claw and install the front door window frame rear moulding.

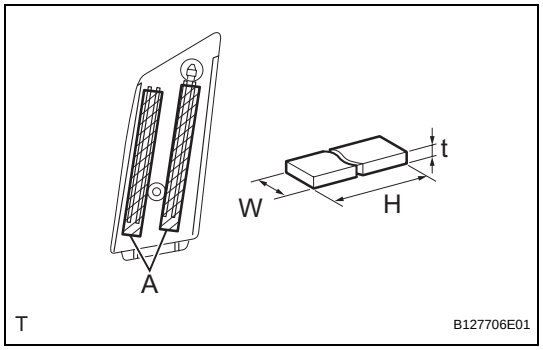

2. INSTALL FRONT DOOR WINDOW FRAME FRONT MOULDING

(a) Clean the attachment surface.

(1) Using an infrared light, heat the adhesive remaining on the body.
NOTICE:
Do not burn yourself with the heated body or infrared light.

(2) Using a shop rag or piece of cloth, rub the remaining adhesive off the body.

(3) Using a non-residue solvent, clean the attachment surface.

(b) Apply new double-sided adhesive tape to the front door window frame front moulding.
Tape Size:

Area	t	W	H
A	1.2 mm (0.047 in.)	7 mm (0.276 in.)	88 mm (3.465 in.)

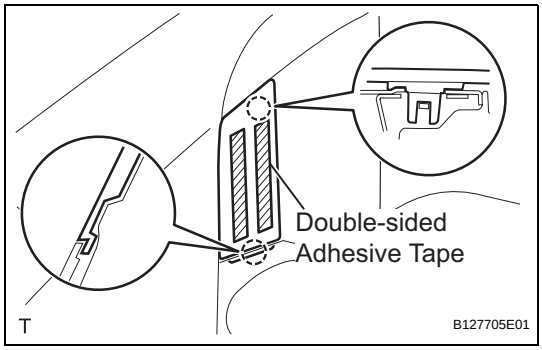

(c) Engage the 2 claws and install the front door window frame front moulding.

LUGGAGE COMPARTMENT DOOR GARNISH (for Sedan)

COMPONENTS

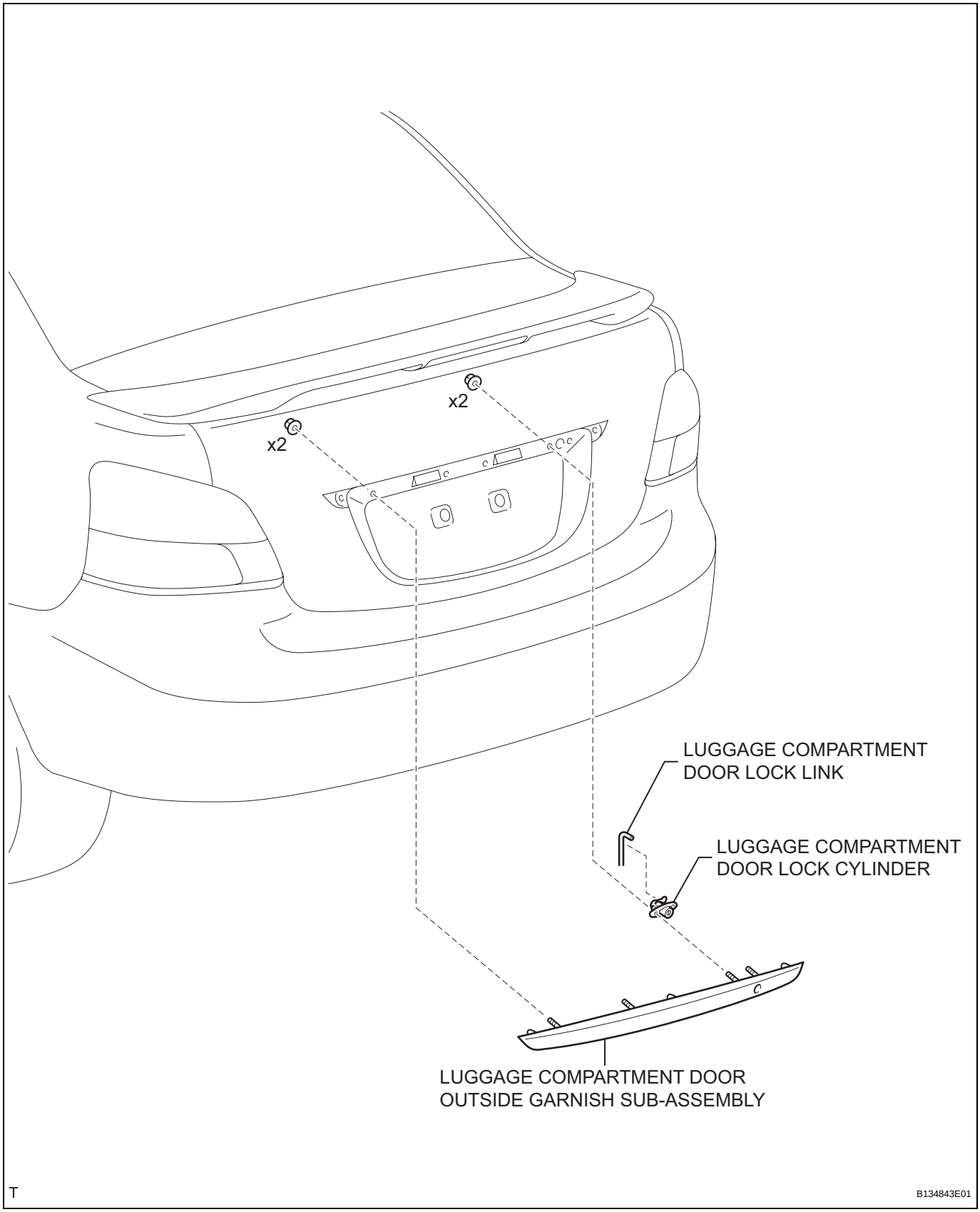

REMOVAL

1. **REMOVE LUGGAGE COMPARTMENT DOOR LOCK CYLINDER (See page ED-132)**

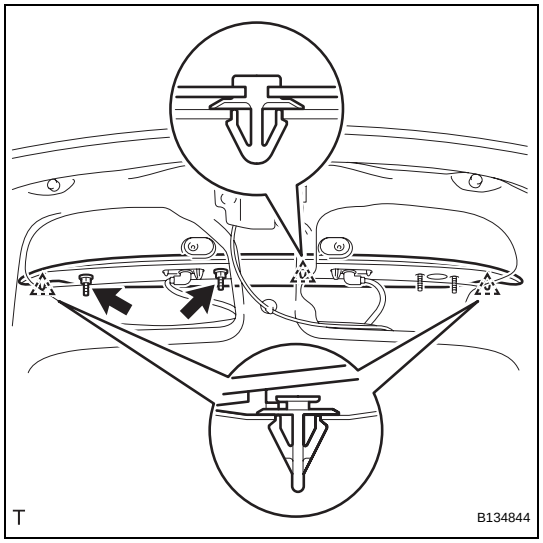

2. **REMOVE LUGGAGE COMPARTMENT DOOR OUTSIDE GARNISH SUB-ASSEMBLY**
   (a) Remove the 2 nuts.
   (b) Disengage the 3 clips and remove the luggage compartment door outside garnish.

INSTALLATION

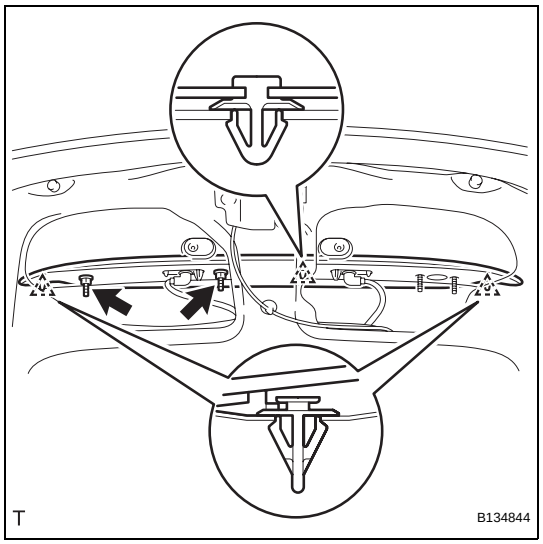

1. **INSTALL LUGGAGE COMPARTMENT DOOR OUTSIDE GARNISH SUB-ASSEMBLY**
   (a) Engage the 3 clips and install the luggage compartment door outside garnish.
   (b) Tighten the 2 nuts.
2. **INSTALL LUGGAGE COMPARTMENT DOOR LOCK CYLINDER (See page ET-138)**

NO. 1 BLACK OUT TAPE (for Sedan)

COMPONENTS

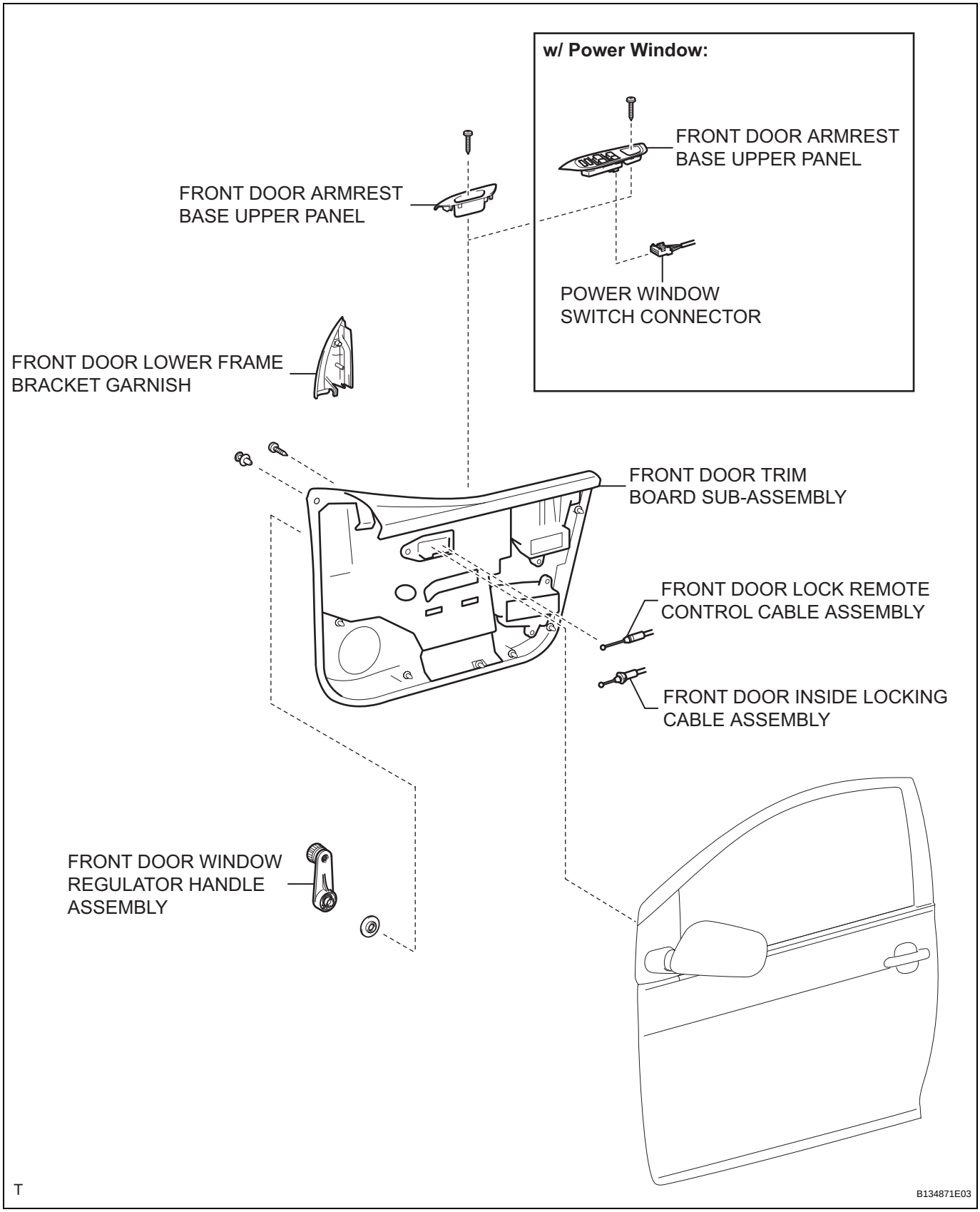

ET

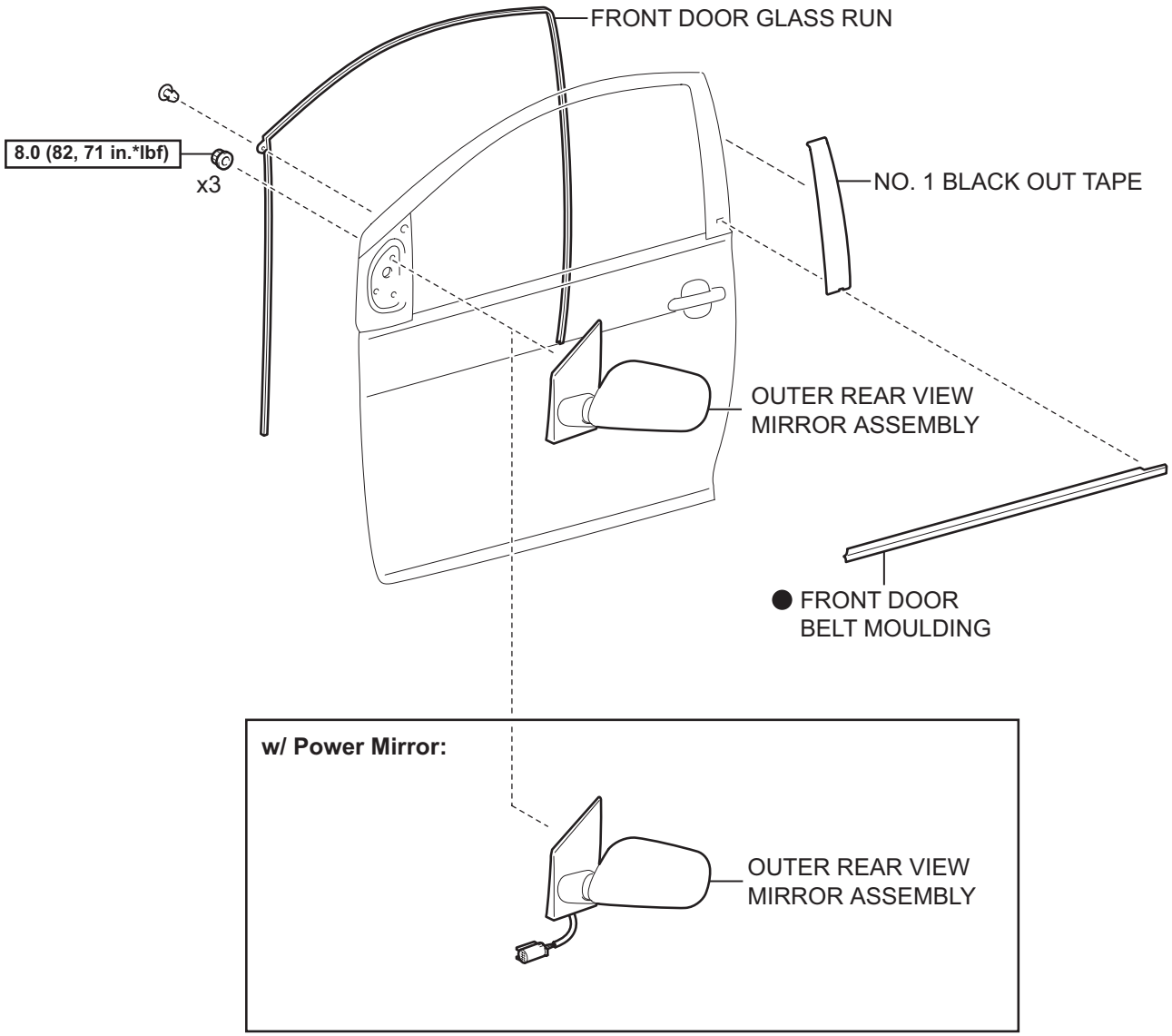

N*m (kgf*cm, ft*lbf) : Specified torque

● Non-reusable part

T

B134876E02

REMOVAL

HINT:
The procedure described below is for the LH side. Use the same procedure for the RH and LH sides, unless otherwise specified.

1. **DISCONNECT CABLE FROM NEGATIVE BATTERY TERMINAL**
2. **REMOVE FRONT DOOR WINDOW REGULATOR HANDLE ASSEMBLY (w/o Power Window) (See page ED-9)**
3. **REMOVE FRONT DOOR LOWER FRAME BRACKET GARNISH (See page ED-9)**
4. **REMOVE FRONT DOOR ARMREST BASE UPPER PANEL (See page ED-9)**
5. **REMOVE FRONT DOOR TRIM BOARD SUB-ASSEMBLY (See page ED-11)**
6. **REMOVE OUTER REAR VIEW MIRROR ASSEMBLY (See page MI-8)**
7. **REMOVE FRONT DOOR BELT MOULDING (See page ET-85)**
8. **REMOVE FRONT DOOR GLASS RUN (See page ED-14)**
9. **REMOVE NO. 1 BLACK OUT TAPE**
   (a) Using an infrared light, heat the black out tape.
   NOTICE:
   Do not burn yourself with the heated front door panel or infrared light.
   HINT:
   Heat at 40 to 60°C (104 to 140°F) for 3 to 5 minutes.
   (b) Lift the end portion with your nail and peel it parallel to the attachment surface.

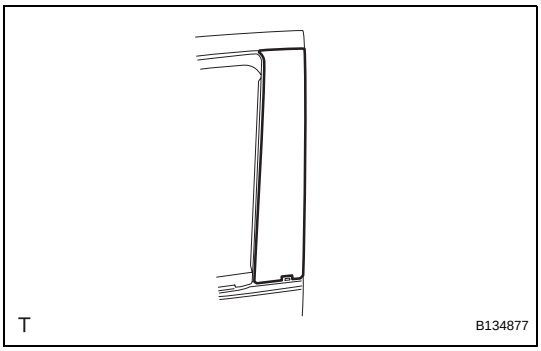

INSTALLATION

HINT:
The procedure described below is for the LH side. Use the same procedure for the RH and LH sides, unless otherwise specified.

1. INSTALL NO. 1 BLACK OUT TAPE

(a) Application precautions:

(1) Application temperature:

1. If the temperature is below 15°C (59°F), using an infrared light, heat the base (body attachment surface) and black out tape up to between 20 and 30°C (68 and 86°F). If the temperature is over 35°C (95°F), perform the operation after lowering the temperature to below 35°C (95°F).

HINT:
- The most suitable temperature for applying the black out tape is 25°C (77°F).
- The black out tape cannot be applied correctly at low temperature due to its stiffness and weak adhesion. The tape loses its consistency at high temperature.

(2) Pre-application procedure:

1. Any uneven twisting or dust on the base (body attachment surface) causes a defective appearance due to air being trapped under the black out tape during application. Make sure there is no uneven twisting or dust on or around the base or black out tape.

HINT:
When the air is dry in winter, put cardboard between the pieces of black out tape and keep them in a dry flat place.

(3) Handling:

1. Keep the black out tape in a dry flat level place because it is easily deformed.

NOTICE:
Do not fold, bend or expose the tape to high temperatures.

(4) Application method (Method of squeegee operation and application for general portions):

NOTICE:
- **The positioning accuracy must be within 1 mm (0.039 in.) when starting the application, otherwise, poor appearance and adhesion will result.**
- **Do not reuse black out tape that has been removed. It causes deformation and weak adhesion.**

1. In order to suppress bubble formation, slightly raise the portion not being pressed by the squeegee away from the base. Tilt the squeegee between 40 and 50° (in the pushing direction) and between 30 and 45° (in the pulling direction), and apply 20 to 30 N (2 to 3 kg, 4 to 6 lb) of pressure at a velocity of 3 to 7 cm/sec. while pushing out the air.

Pushing Direction:

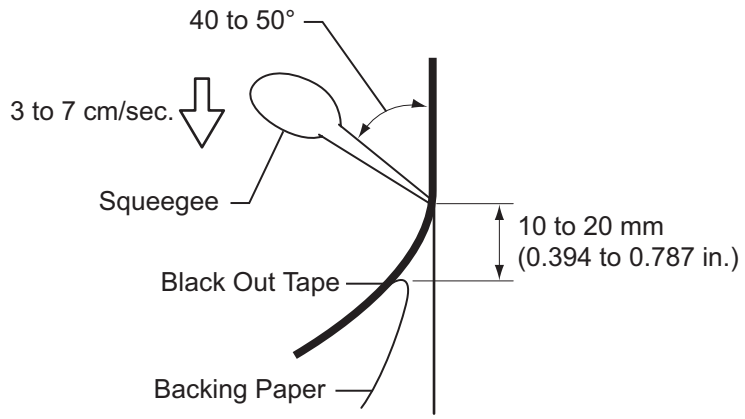

Pulling Direction:

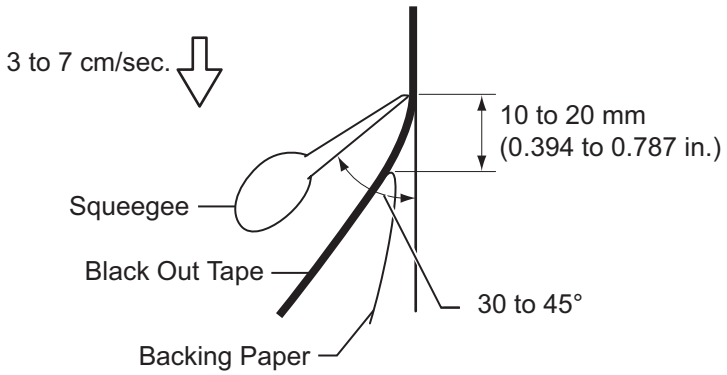

T

B114637E01

NOTICE:
While using the squeegee, do not change the speed, stop the operation or change the force of the application. Doing so could cause a streak across the surface of the black out tape called a shock line. While using the squeegee, keep the speed and force of application constant and the angle correct.

HINT:
- The squeegee can be tilted in either the pushing direction or in the pulling direction against the attachment portion.
- Perform the procedure while peeling the backing paper off the black out tape, 10 to 20 mm (0.394 to 0.787 in.) from the end of the squeegee.

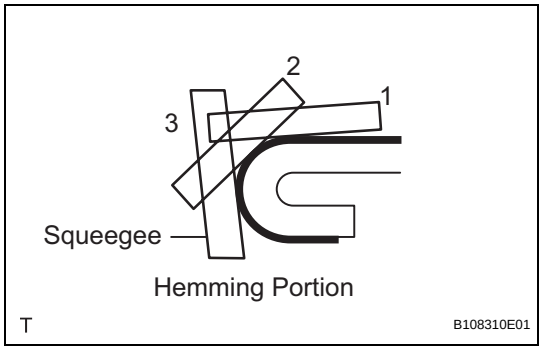

(5) Application method (Method of squeegee operation and application method for hemming portions):
1. If the tape cannot be pressed in one step using the squeegee, perform the application in several steps. Using your finger or a thicker part of the squeegee, gradually apply the tape to the small R portion of the hemming portion in 2 or 3 steps.

HINT:
Peel off the backing paper at the hemming portion and apply the black out tape with your finger or a thicker part of the squeegee.

(6) Application method (Method of squeegee operation and application method for corner sections):
1. Carefully apply the tape using a finger after peeling the backing paper off the corner section.
2. In order to prevent appearance deterioration caused by the tape pin angle, turn in the tape at the corner after heating the black out tape with a dryer.

(7) Inspection:
1. Repeat the application using new black out tape.

NOTICE:
Do not use a needle to rectify bubbles in any glazed tape being applied to the outer panel, in order to make scratches virtually imperceptible.

HINT:
Use an instant adhesive if the hemming or corner portions of the black out tape are partially peeled off.

(b) Clean the attachment surface (Using an infrared light):
(1) Using an infrared light, heat any black out tape and adhesive remaining on the body.
CAUTION:
Do not burn yourself with the heated body or infrared light.
(2) Using a shop rag or piece of cloth, rub the remaining black out tape and adhesive off the body.

(3) Using a non-residue solvent, clean the attachment surface.

(c) Clean the attachment surface (Using a tape removal disc):

(1) Set the 8 discs in the holder and insert the removal disc into an air drill or electric drill.
NOTICE:
Use an electric drill of which the no-load operation is 2,000 to 3,000 r/min.

(2) Using a tape removal disc, rub the remaining black out tape and adhesive off the body.
NOTICE:
- **Wear protective glasses during the operation.**
- **Rotate and operate the disc in the correct direction.**
- **Visually check that the cutting portion is not damaged while rubbing the remaining black out tape and adhesive off the body.**

(3) Using a non-residue solvent, clean the attachment surface.

(d) Apply new No. 1 black out tape to the positions shown in the illustration.

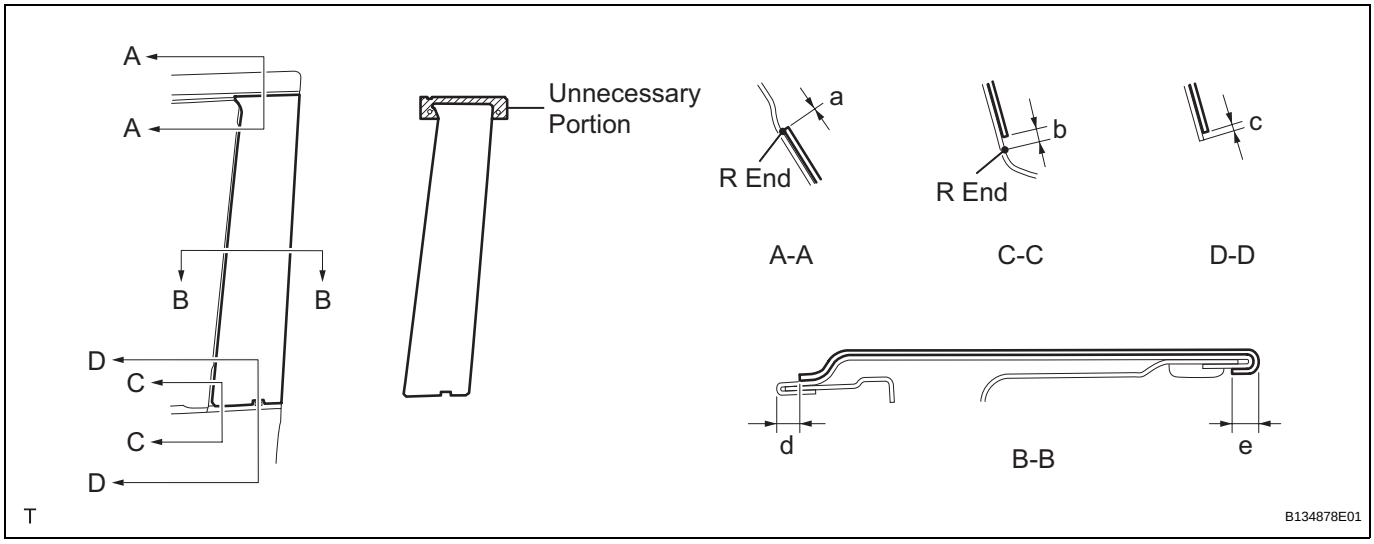

Installation position

Mark	Measurement (along surface)
a	+-1 mm (+-0.039 in.)
b	2 mm (0.079 in.)
c	0 to 1.8 mm (0 to 0.071 in.)
d	3 to 5 mm (0.118 to 0.197 in.)
e	2 to 4 mm (0.079 to 0.157 in.)

2. INSTALL FRONT DOOR GLASS RUN (See page ED-23)

3. INSTALL FRONT DOOR BELT MOULDING (See page ET-86)

4. **INSTALL OUTER REAR VIEW MIRROR ASSEMBLY (See page MI-11)**
5. **INSTALL FRONT DOOR TRIM BOARD SUB-ASSEMBLY (See page ED-26)**
6. **INSTALL FRONT DOOR ARMREST BASE UPPER PANEL (See page ED-28)**
7. **INSTALL FRONT DOOR LOWER FRAME BRACKET GARNISH (See page ED-28)**
8. **INSTALL FRONT DOOR WINDOW REGULATOR HANDLE ASSEMBLY (w/o Power Window) (See page ED-29)**
9. **CONNECT CABLE TO NEGATIVE BATTERY TERMINAL**
   Torque: 5.4 N*m (55 kgf*cm, 48 in.*lbf)

NO. 1 BLACK OUT TAPE (for Hatchback)

COMPONENTS

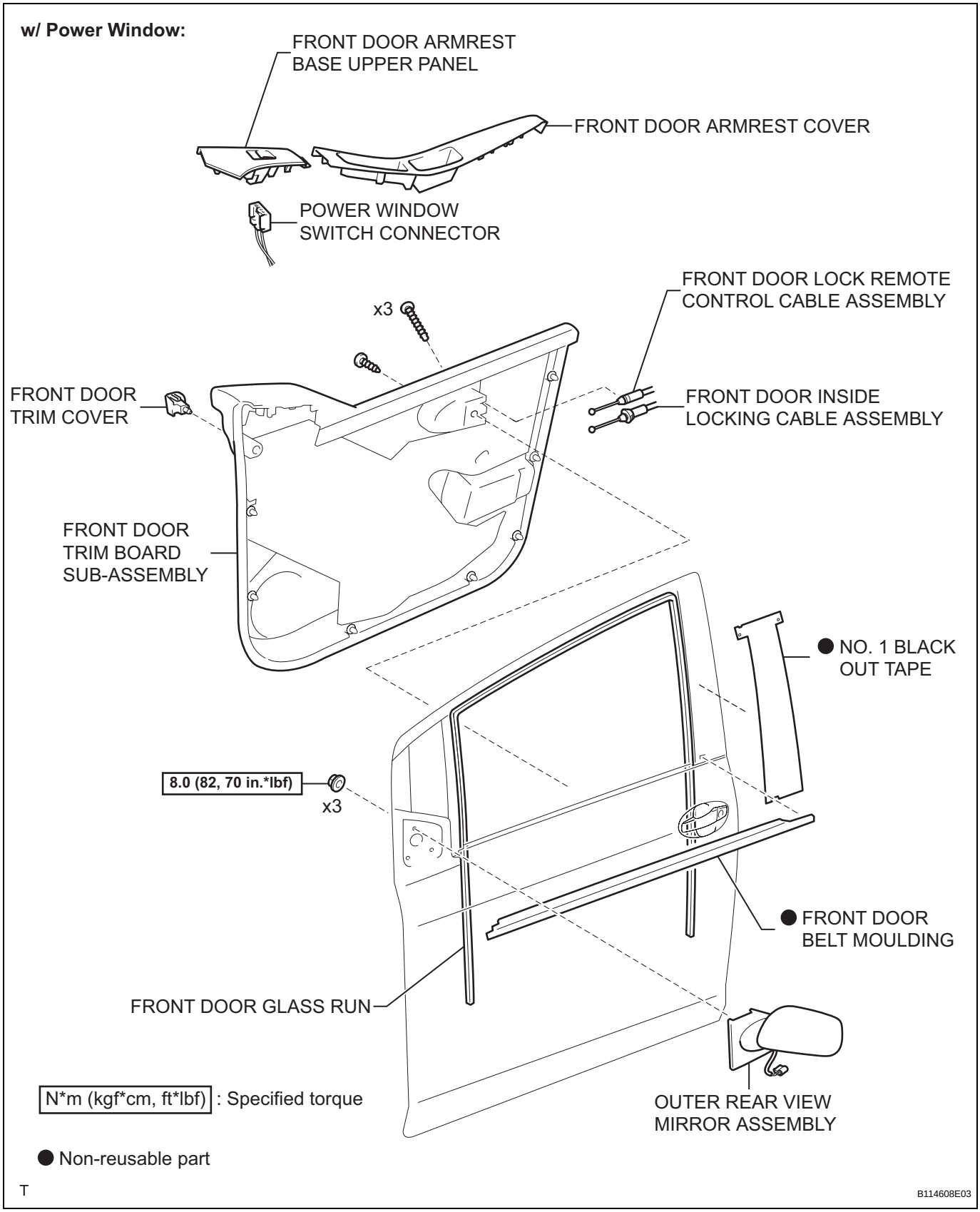

ET

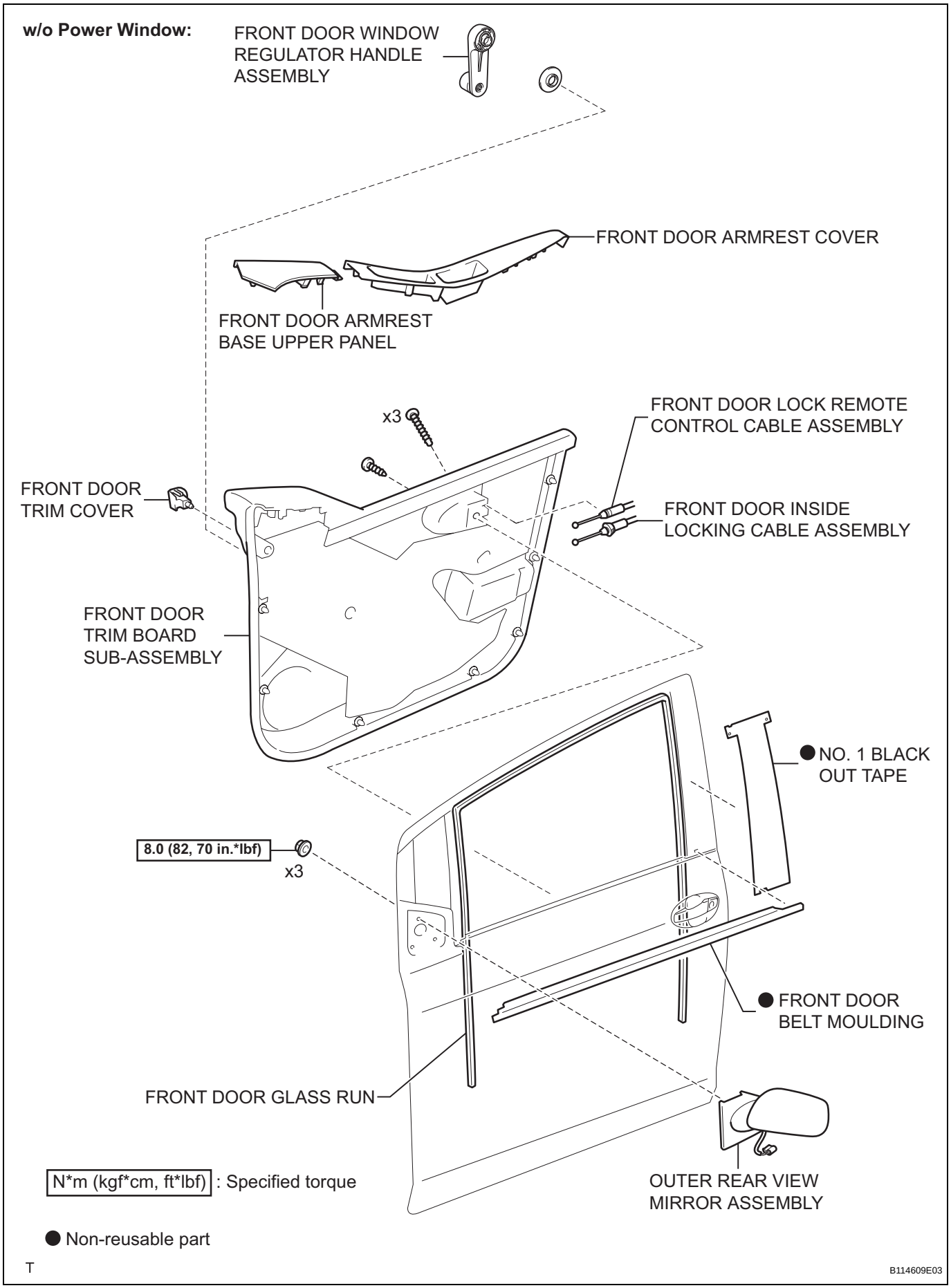
w/o Power Window:
FRONT DOOR WINDOW REGULATOR HANDLE ASSEMBLY
FRONT DOOR ARMREST COVER
FRONT DOOR ARMREST BASE UPPER PANEL
x3
FRONT DOOR LOCK REMOTE CONTROL CABLE ASSEMBLY
FRONT DOOR TRIM COVER
FRONT DOOR INSIDE LOCKING CABLE ASSEMBLY
FRONT DOOR TRIM BOARD SUB-ASSEMBLY
● NO. 1 BLACK OUT TAPE
8.0 (82, 70 in.*lbf)
x3
● FRONT DOOR BELT MOULDING
FRONT DOOR GLASS RUN
OUTER REAR VIEW MIRROR ASSEMBLY
N*m (kgf*cm, ft*lbf) : Specified torque
● Non-reusable part
T
B114609E03

ET

REMOVAL

HINT:
The procedure described below is for the LH side. Use the same procedure for both the RH and LH sides, unless otherwise specified.

1. **DISCONNECT CABLE FROM NEGATIVE BATTERY TERMINAL (w/ Power Window)**
2. **REMOVE FRONT DOOR ARMREST COVER (See page ED-33)**
3. **REMOVE FRONT DOOR ARMREST BASE UPPER PANEL**
   (a) w/ Power Window:
      (1) Remove the front door armrest base upper panel (See page ED-33).
   (b) w/o Power Window:
      (1) Remove the front door armrest base upper panel (See page ED-57).
4. **REMOVE FRONT DOOR WINDOW REGULATOR HANDLE ASSEMBLY (w/o Power Window) (See page ED-58)**
5. **REMOVE FRONT DOOR TRIM BOARD SUB-ASSEMBLY**
   (a) w/ Power Window:
      (1) Remove the front door trim board sub-assembly (See page ED-34).
   (b) w/o Power Window:
      (1) Remove the front door trim board sub-assembly (See page ED-58).
6. **REMOVE OUTER REAR VIEW MIRROR ASSEMBLY (See page MI-13)**
7. **REMOVE FRONT DOOR BELT MOULDING (See page ET-91)**
8. **REMOVE FRONT DOOR GLASS RUN (See page ED-37)**
9. **REMOVE NO. 1 BLACK OUT TAPE**
   (a) Using an infrared light, heat the black out tape.
   NOTICE:
   Do not burn yourself with the heated front door panel or infrared light.
   HINT:
   Heat at 40 to 60°C (104 to 140°F) for 3 to 5 minutes.
   (b) Lift the end portion with your nail and peel it parallel to the attachment surface.

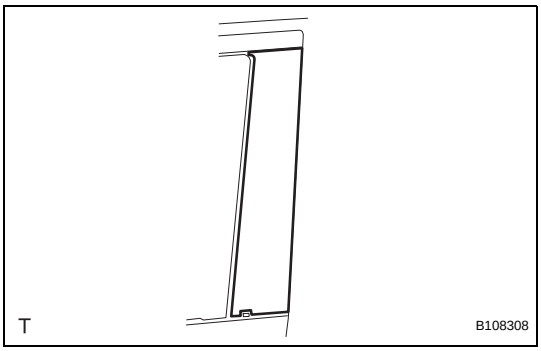

ET

INSTALLATION

HINT:
The procedure described below is for the LH side. Use the same procedure for both the RH and LH sides, unless otherwise specified.

1. INSTALL NO. 1 BLACK OUT TAPE

(a) Application precautions:

(1) Application temperature:
If the temperature is below 15°C (59°F), using an infrared light, heat the base (body attachment surface) and black out tape up to between 20 and 30°C (68 and 86°F). If the temperature is over 35°C (95°F), perform the operation after lowering the temperature to below 35°C (95°F).
HINT:
- The most suitable temperature for applying the black out tape is 25°C (77°F).
- The black out tape cannot be applied correctly at low temperatures due to its stiffness and weak adhesion. The tape loses its consistency at high temperatures.

(2) Pre-application procedure:
Any uneven twisting or dust on the base (body attachment surface) causes a defective appearance due to air being trapped under the black out tape during application. Make sure there is no uneven twisting or dust on or around the base or black out tape.
HINT:
When the air is dry in winter, put cardboard between the piece of black out tape and keep it in a dry flat place.

(3) Handling:
Keep the black out tape in a dry flat level place because it is easily deformed.
NOTICE:
Do not fold, bend or expose the tape to high temperatures.

(4) Application method (Method of squeegee operation and application for general portions):
NOTICE:
- **The positioning accuracy must be within 1mm (0.039 in.) when starting the application, otherwise, poor appearance and adhesion will result.**
- **Do not reuse black out tape that has been removed. It causes deformation and weak adhesion.**

1. In order to suppress bubble formation, slightly raise the portion not being pressed by the squeegee away from the base. Tilt the squeegee between 40 and 50° (in the pushing direction) and between 30 and 45° (in the pulling direction), and apply 20 to 30 N (2 to 3 kg, 4 to 6 lb) of pressure at a velocity of 3 to 7 cm/sec. while pushing out the air.

Pushing Direction:

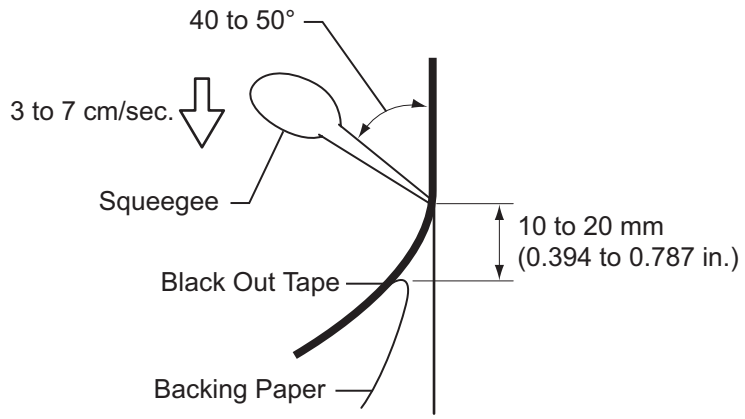

Pulling Direction:

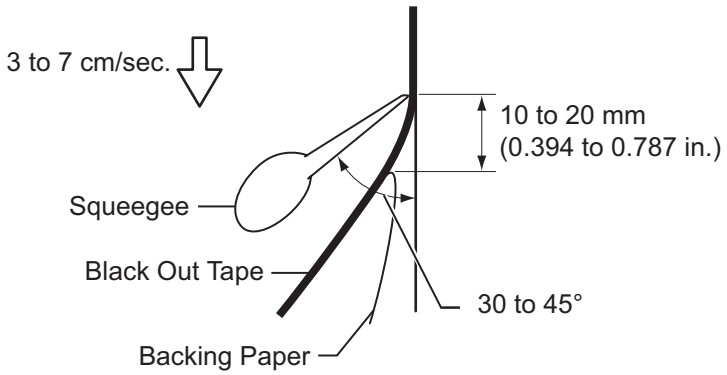

T

B114637E01

NOTICE:
While using the squeegee, do not change the speed, stop the operation or change the force of the application. Doing so could cause a streak across the surface of the black out tape called a shock line. While using the squeegee, keep the speed and force of application constant and the angle correct.

HINT:
- The squeegee can be tilted in either the pushing direction or in the pulling direction against the attachment portion.
- Perform the procedure while peeling the backing paper off the black out tape, 10 to 20 mm (0.394 to 0.787 in.) from the end of the squeegee.

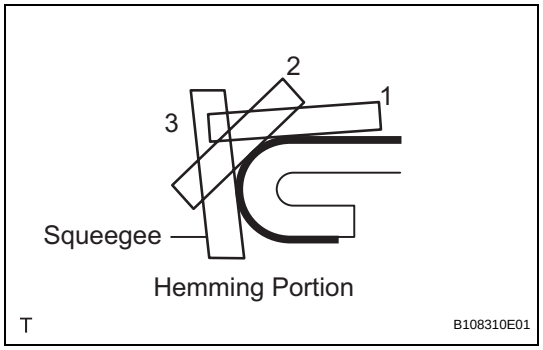

(5) Application method (Method of squeegee operation and application method for hemming portions):
If the tape cannot be pressed in one step using the squeegee, perform the application in several steps. Using your finger or a thicker part of the squeegee, gradually apply the tape to the small R portion of the hemming portion in 2 or 3 steps.
HINT:
Peel off the backing paper at the hemming portion and apply the black out tape with your finger or thicker part of the squeegee.

(6) Application method (Method of squeegee operation and application method for corner sections):
- Carefully apply the tape using a finger after peeling the backing paper off the corner section.
- In order to prevent appearance deterioration caused by the tape pin angle, turn in the tape at the corner after heating the black out tape with a dryer.

(7) Inspection:
Repeat the application using new black out tape if any visual defects are found after completing the application.
NOTICE:
Do not use a needle to rectify bubbles in any glazed tape being applied to the outer panel, in order to make scratches virtually imperceptible.
HINT:
Use an instant adhesive if the hemming or corner portions of the black out tape are partially peeled off.

(b) Clean the attachment surface (using an infrared light):

(1) Using an infrared light, heat any black out tape and adhesive remaining on the body.
CAUTION:
Do not burn yourself with the heated body or infrared light.

(2) Using a shop rag or piece of cloth, rub the remaining black out tape and adhesive off the body.

(3) Using a non-residue solvent, clean the attachment surface.

(c) Clean the attachment surface (using a tape removal disc):

(1) Set the 8 discs in the holder and insert the removal disc into an air drill or electric drill.
NOTICE:
Use an electric drill of which the no-load operation is 2,000 to 3,000 r/min.

(2) Using a tape removal disc, rub the remaining black out tape and adhesive off the body.
NOTICE:
- **Wear protective glasses during the operation.**
- **Rotate and operate the disc in the correct direction.**
- **Visually check that the cutting portion is not damaged while rubbing the remaining black out tape and adhesive off the body.**

(3) Using a non-residue solvent, clean the attachment surface.

(d) Apply new black out tape to the positions shown in the illustration.

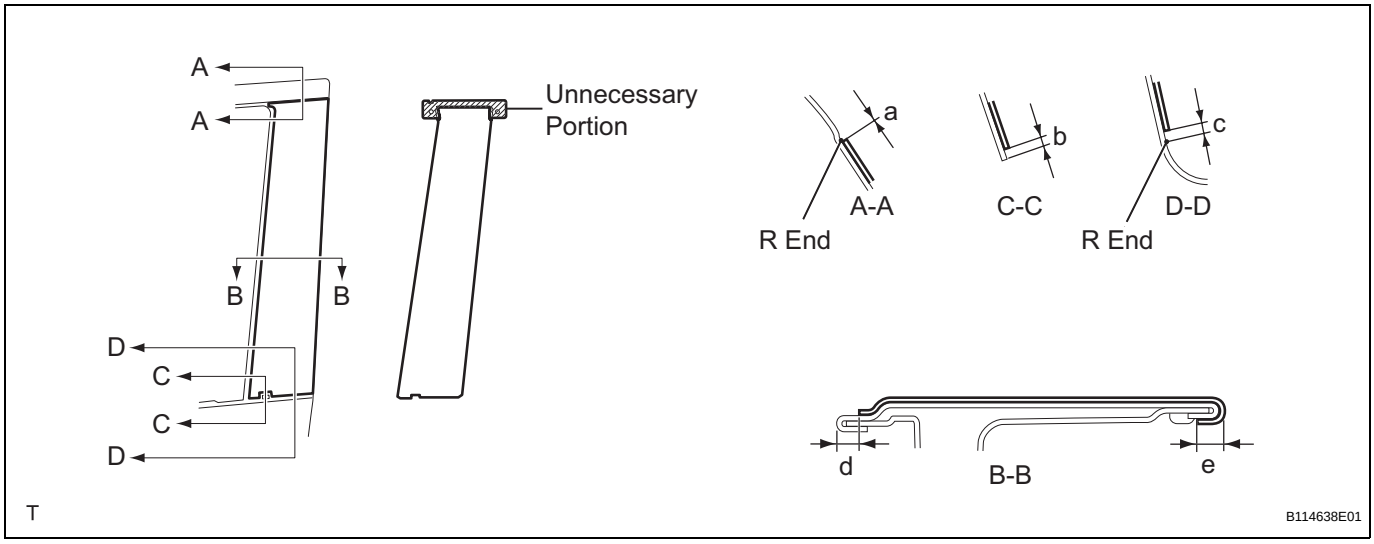

Installation position

Mark	Measurement (along surface)
a	+-1 mm (+-0.039 in.)
b	0 to 1.8 mm (0 to 0.071 in.)
c	2 mm (0.079 in.)
d	1.2 to 3.2 mm (0.047 to 0.126 in.)
e	2 to 4 mm (0.079 to 0.157 in.)

2. INSTALL FRONT DOOR GLASS RUN (See page ED-49)

3. INSTALL FRONT DOOR BELT MOULDING (See page ET-92)

4. INSTALL OUTER REAR VIEW MIRROR ASSEMBLY (See page MI-16)

5. INSTALL FRONT DOOR TRIM BOARD SUB-ASSEMBLY

(a) w/ Power Window:

(1) Install the front door trim board sub-assembly (See page ED-51).

(b) w/o Power Window:

(1) Install the front door trim board sub-assembly (See page ED-74).

6. INSTALL FRONT DOOR WINDOW REGULATOR HANDLE ASSEMBLY (w/o Power Window) (See page ED-75)

7. INSTALL FRONT DOOR ARMREST BASE UPPER PANEL

(a) w/ Power Window:

(1) Install the front door armrest base upper panel (See page ED-53).

(b) w/o Power Window:

(1) Install the front door armrest base upper panel (See page ED-74).

8. INSTALL FRONT DOOR ARMREST COVER (See page ED-53)

9. CONNECT CABLE TO NEGATIVE BATTERY TERMINAL (w/ Power Window)
Torque: 5.4 N*m (55 kgf*cm, 48 in.*lbf)

NO. 2 BLACK OUT TAPE (for Sedan)

COMPONENTS

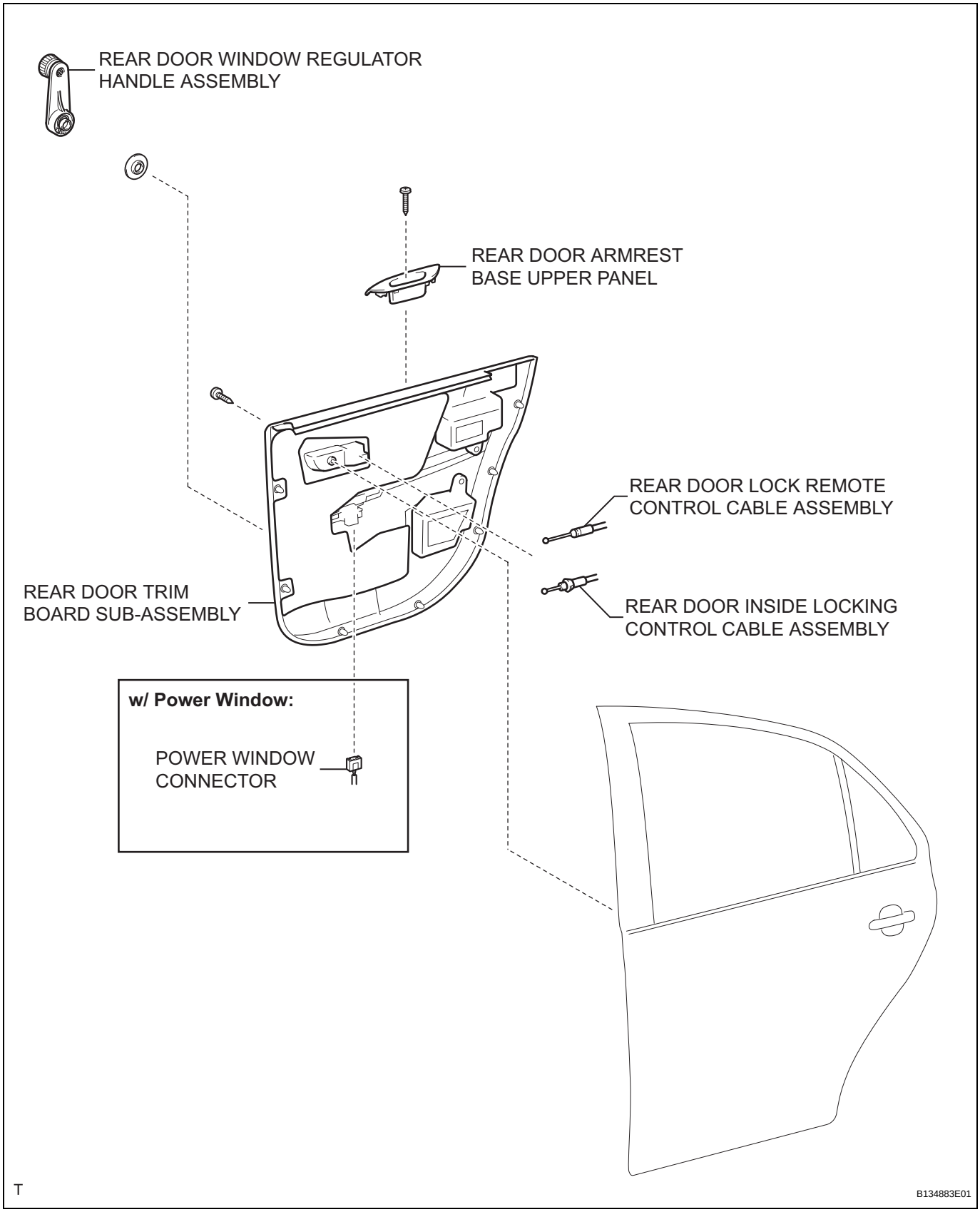

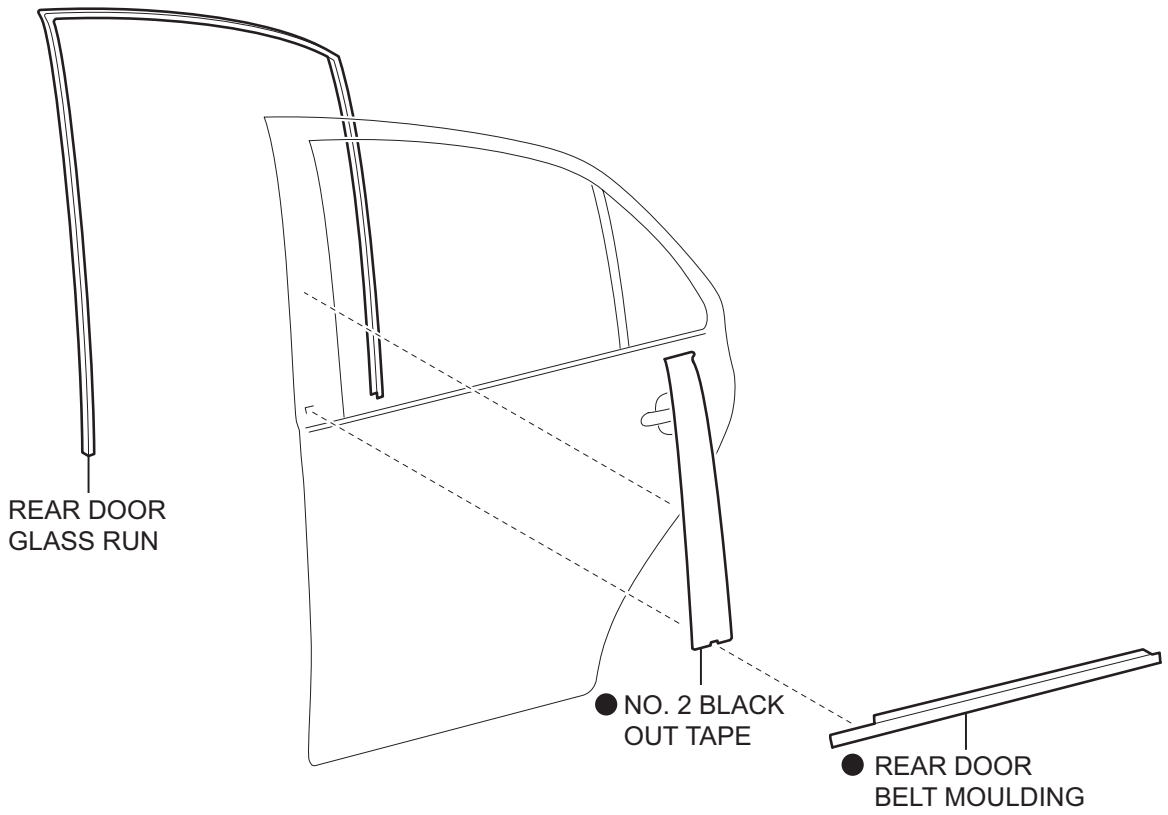

● Non-reusable part

T

B134884E01

REMOVAL

HINT:
The procedure described below is for the LH side. Use the same procedure for the RH and LH sides, unless otherwise specified.

1. **DISCONNECT CABLE FROM NEGATIVE BATTERY TERMINAL (w/ Power Window)**
2. **REMOVE REAR DOOR WINDOW REGULATOR HANDLE ASSEMBLY (w/o Power Window) (See page ED-79)**
3. **REMOVE REAR DOOR ARMREST BASE UPPER PANEL (See page ED-79)**
4. **REMOVE REAR DOOR TRIM BOARD SUB-ASSEMBLY (See page ED-79)**
5. **REMOVE REAR DOOR BELT MOULDING (See page ET-95)**
6. **REMOVE REAR DOOR GLASS RUN (See page ED-81)**
7. **REMOVE NO. 2 BLACK OUT TAPE**
   (a) Using an infrared light, heat the No. 2 black out tape.
   NOTICE:
   Do not burn yourself with the heated front door panel or infrared light.
   HINT:
   Heat at 40 to 60°C (104 to 140°F) for 3 to 5 minutes.
   (b) Lift the end portion with your nail and peel it parallel to the attachment surface.

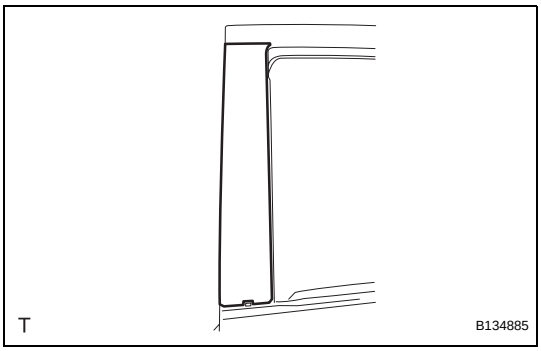

INSTALLATION

HINT:
The procedure described below is for the LH side. Use the same procedure for the RH and LH sides, unless otherwise specified.

1. INSTALL NO. 2 BLACK OUT TAPE

(a) Application precautions (See page ET-120).
(b) Clean the attachment surface (Using an infrared light) (See page ET-120).
(c) Clean the attachment surface (Using a tape removal disc) (See page ET-120).
(d) Apply new No. 1 black out tape to the positions shown in the illustration.

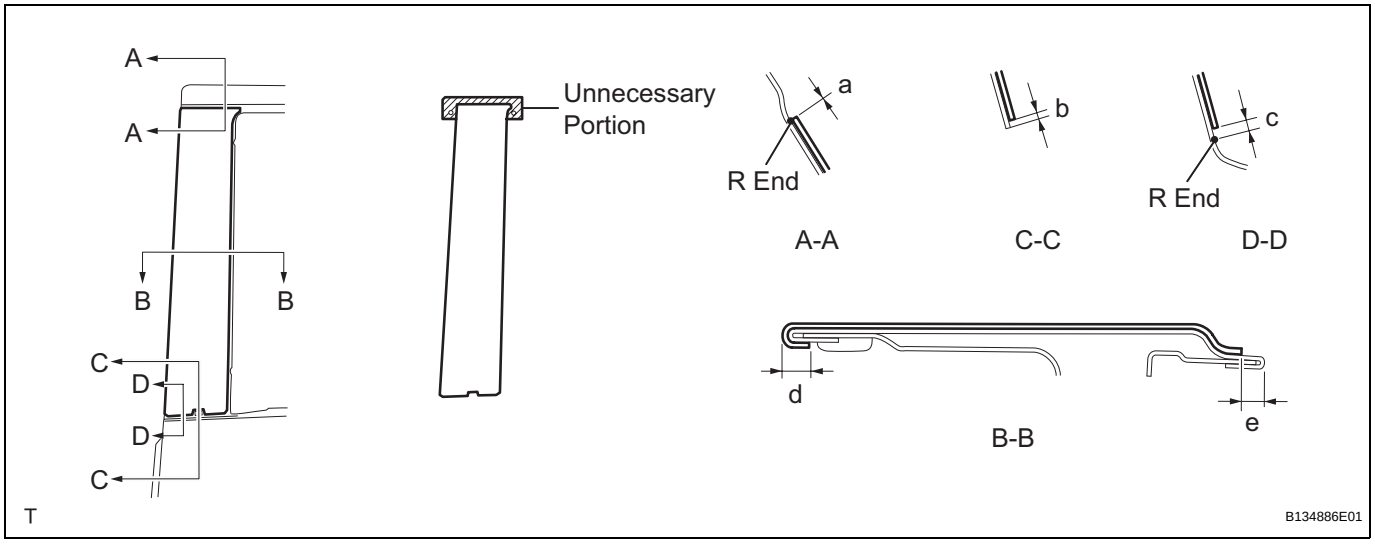

Installation position

Mark	Measurement (along surface)
a	+-1 mm (+-0.039 in.)
b	0 to 0.8 mm (0 to 0.032 in.)
c	2 mm (0.079 in.)
d	2 to 4mm (0.079 to 0.157 in.)
e	3 to 5 mm (0.118 to 0.197 in.)

2. INSTALL REAR DOOR GLASS RUN (See page ED-91)

3. INSTALL REAR DOOR BELT MOULDING (See page ET-95)

4. INSTALL REAR DOOR TRIM BOARD SUB-ASSEMBLY (See page ED-93)

5. INSTALL REAR DOOR ARMREST BASE UPPER PANEL (See page ED-94)

6. INSTALL REAR DOOR WINDOW REGULATOR HANDLE ASSEMBLY (w/o Power Window) (See page ED-94)

7. CONNECT CABLE TO NEGATIVE BATTERY TERMINAL (w/ Power Window)
Torque: 5.4 N*m (55 kgf*cm, 48 in.*lbf)

NO. 2 BLACK OUT TAPE (for Hatchback)

COMPONENTS

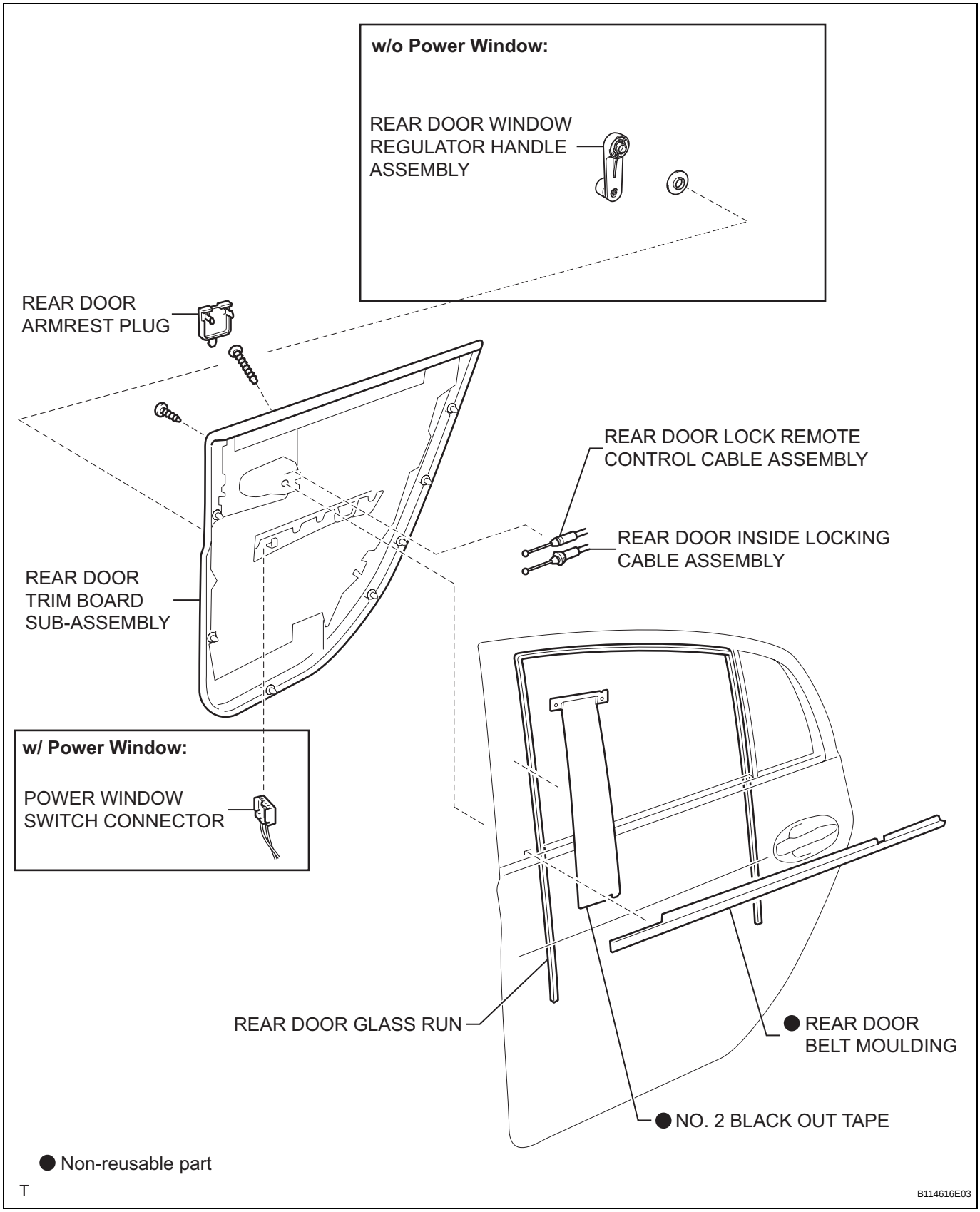

ET

REMOVAL

HINT:
The procedure described below is for the LH side. Use the same procedure for both the RH and LH sides, unless otherwise specified.

1. **DISCONNECT CABLE FROM NEGATIVE BATTERY TERMINAL (w/ Power Window)**
2. **REMOVE REAR DOOR WINDOW REGULATOR HANDLE ASSEMBLY (w/o Power Window) (See page ED-115)**
3. **REMOVE REAR DOOR TRIM BOARD SUB-ASSEMBLY**
   (a) w/ Power Window:
      (1) Remove the rear door trim board sub-assembly (See page ED-98).
   (b) w/o Power Window:
      (1) Remove the rear door trim board sub-assembly (See page ED-115).
4. **REMOVE REAR DOOR BELT MOULDING (See page ET-97)**
5. **REMOVE REAR DOOR GLASS RUN (See page ED-100)**
6. **REMOVE NO. 2 BLACK OUT TAPE**
   (a) Using an infrared light, heat the black out tape.
   NOTICE:
   Do not burn yourself with the heated front door panel or infrared light.
   HINT:
   Heat at 40 to 60°C (104 to 140°F) for 3 to 5 minutes.
   (b) Lift the end portion with your nail and peel it parallel to the attachment surface.

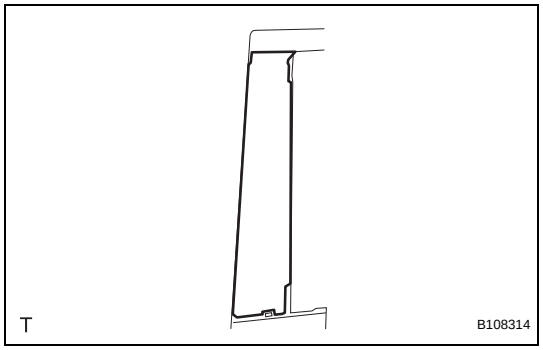

INSTALLATION

HINT:
The procedure described below is for the LH side. Use the same procedure for both the RH and LH sides, unless otherwise specified.

1. INSTALL NO. 2 BLACK OUT TAPE

(a) Precautions during application (See page ET-129).
(b) Clean the attachment surface (using an infrared light) (See page ET-129).
(c) Clean the attachment surface (using a tape removal disc) (See page ET-129).
(d) Apply a new black out tape to the positions shown in the illustration.

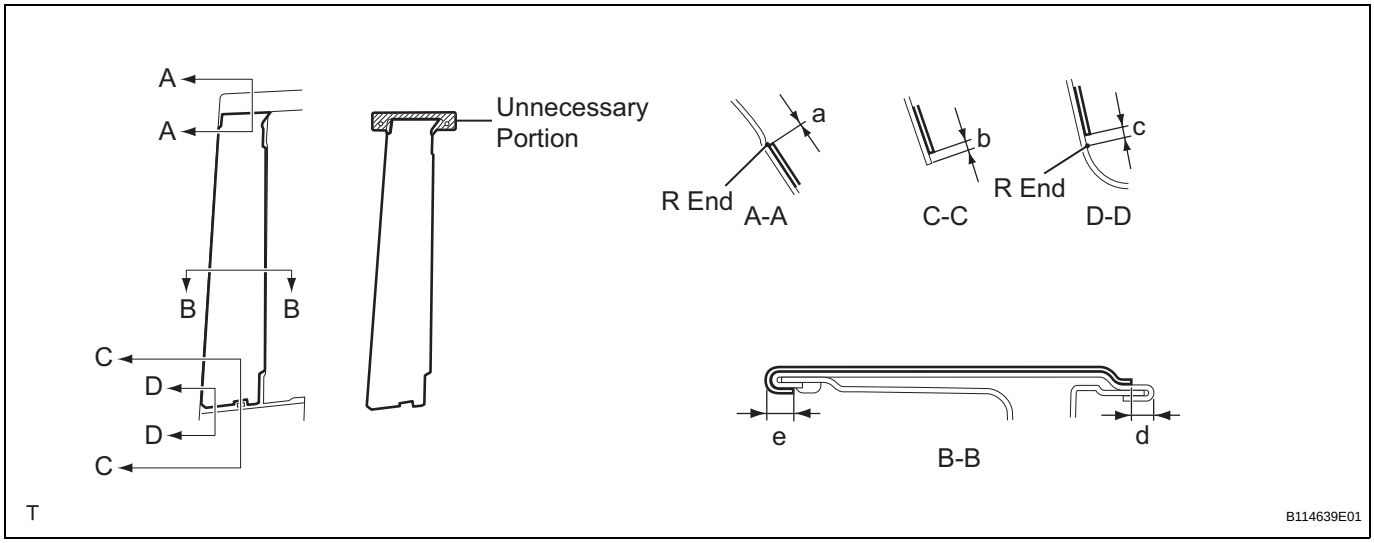

Installation position

Mark	Measurement (along surface)
a	+-1 mm (+-0.039 in.)
b	0 to 1.8 mm (0 to 0.071 in.)
c	2 mm (0.079 in.)
d	1.2 to 3.2 mm (0.047 to 0.126 in.)
e	2 to 4 mm (0.079 to 0.157 in.)

2. INSTALL REAR DOOR GLASS RUN (See page ED-109)

3. INSTALL REAR DOOR BELT MOULDING (See page ET-97)

4. INSTALL REAR DOOR TRIM BOARD SUB-ASSEMBLY

(a) w/ Power Window:
  (1) Install the rear door trim board sub-assembly (See page ED-111).
(b) w/o Power Window:
  (1) Install the rear door trim board sub-assembly (See page ED-127).

5. **INSTALL REAR DOOR WINDOW REGULATOR HANDLE ASSEMBLY (w/o Power Window) (See page ED-128)**

6. **CONNECT CABLE TO NEGATIVE BATTERY TERMINAL (w/ Power Window)**
   Torque: 5.4 N*m (55 kgf*cm, 48 in.*lbf)

NO. 3 BLACK OUT TAPE (for Sedan)

COMPONENTS

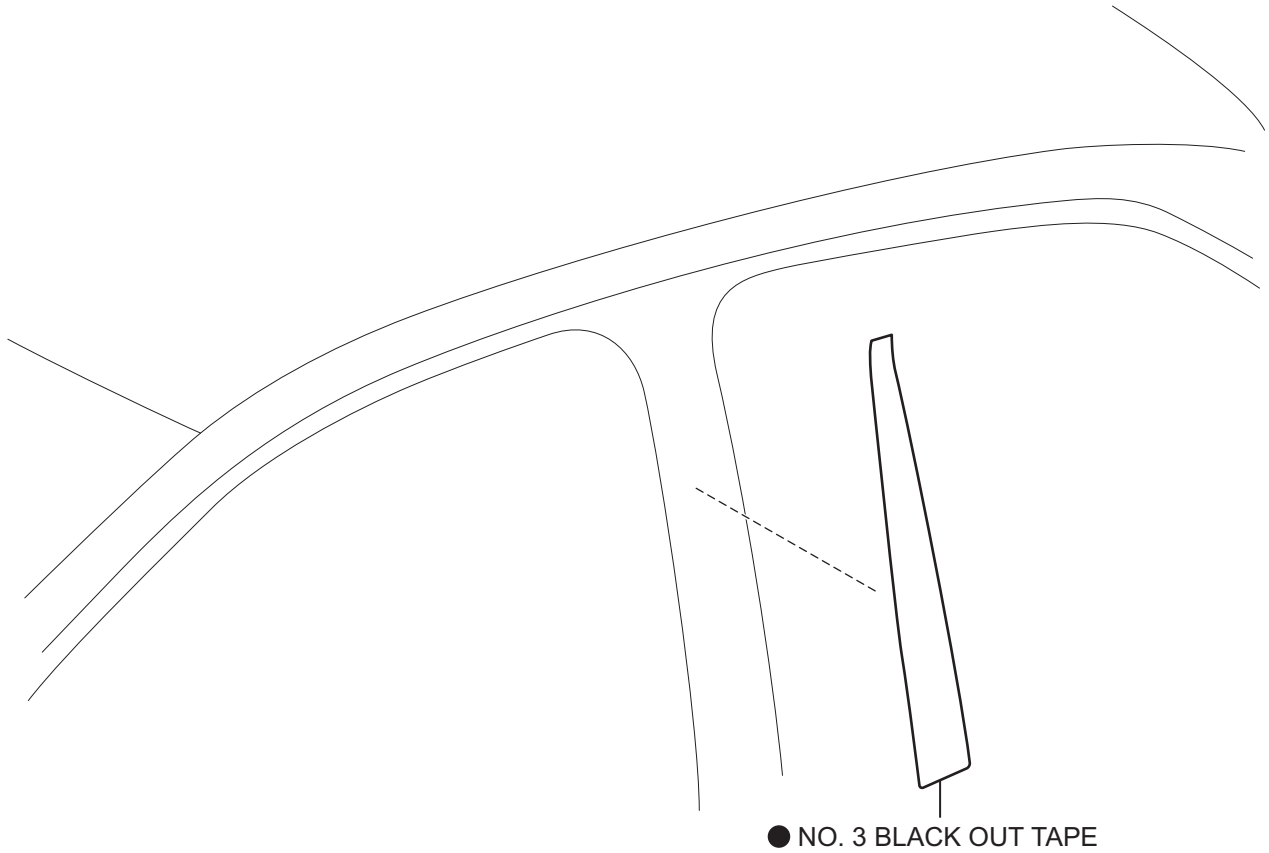

● Non-reusable part

T

B134887E01

REMOVAL

HINT:
The procedure described below is for the LH side. Use the same procedure for the RH and LH sides, unless otherwise specified.

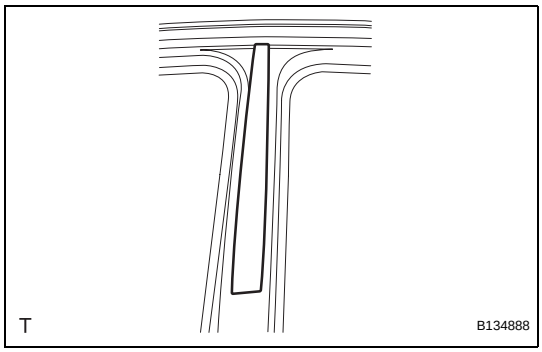

1. REMOVE NO. 3 BLACK OUT TAPE

(a) Using an infrared light, heat the No. 3 black out tape.
NOTICE:
Do not burn yourself with the heated front door panel or infrared light.
HINT:
Heat at 40 to 60°C (104 to 140°F) for 3 to 5 minutes.

(b) Lift the end portion with your nail and peel it parallel to the attachment surface.

INSTALLATION

HINT:
The procedure described below is for the LH side. Use the same procedure for the RH and LH sides, unless otherwise specified.

1. INSTALL NO. 3 BLACK OUT TAPE

(a) Application precautions (See page ET-120).
(b) Clean the attachment surface (Using an infrared light) (See page ET-120).
(c) Clean the attachment surface (Using a tape removal disc) (See page ET-120).
(d) Apply new No. 1 black out tape to the positions shown in the illustration.

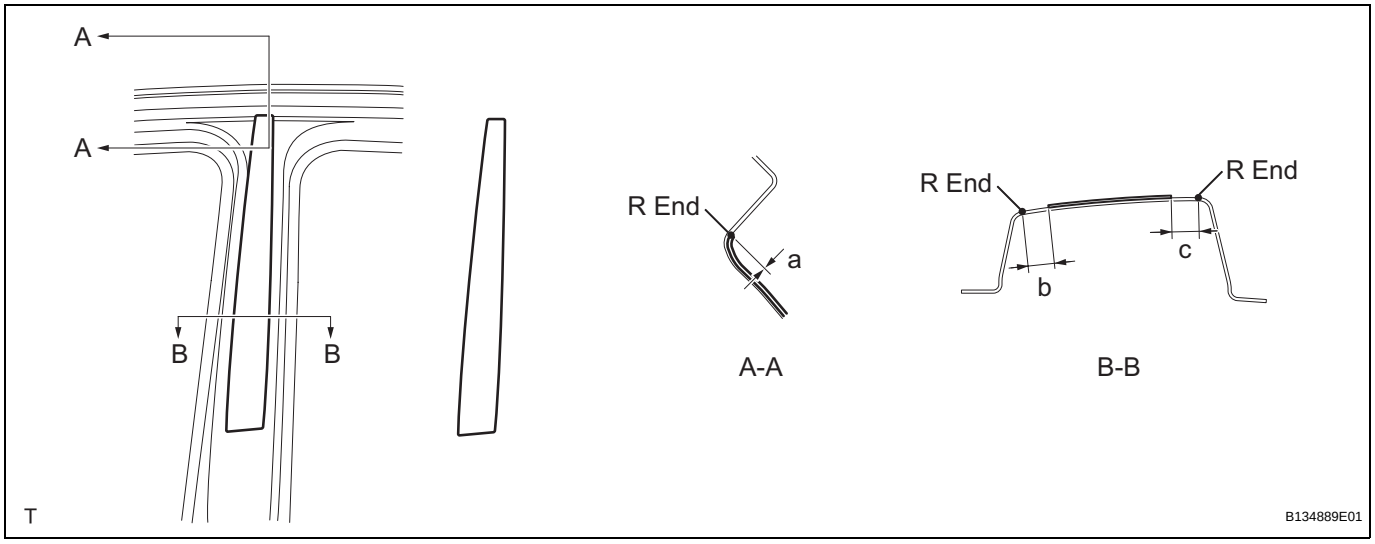

Installation position

Mark	Measurement (along surface)
a	+-1 mm (+-0.039 in.)
b	11 to 13 mm (0.433 to 0.512 in.)
c	10 to 12 mm (0.394 to 0.472 in.)

NO. 3 BLACK OUT TAPE (for Hatchback)

COMPONENTS

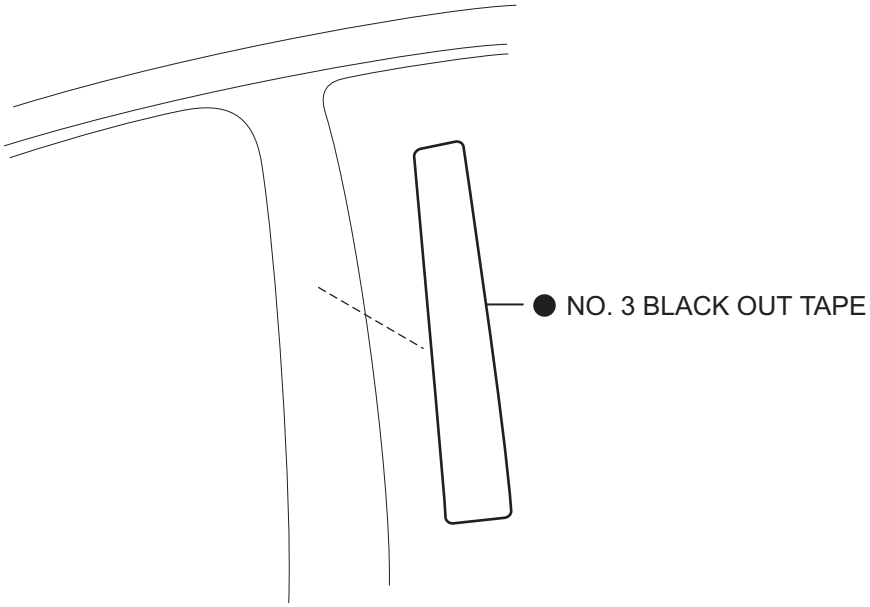

● Non-reusable part

T

B114641E01

REMOVAL

HINT:
The procedure described below is for the LH side. Use the same procedure for the the RH and LH sides, unless otherwise specified.

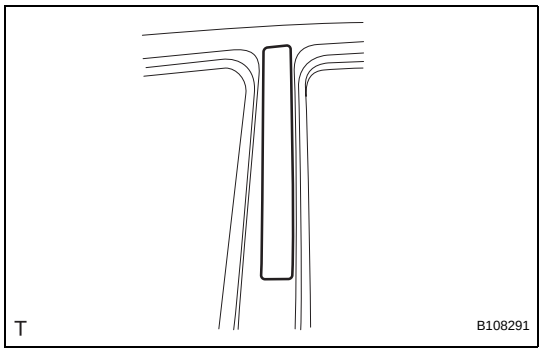

1. REMOVE NO. 3 BLACK OUT TAPE

(a) Using an infrared light, heat the black out tape.
NOTICE:
Do not burn yourself with the heated front door panel or infrared light.
HINT:
Heat at 40 to 60°C (104 to 140°F) for 3 to 5 minutes.

(b) Lift the end portion with your nail and peel it parallel to the attachment surface.

INSTALLATION

HINT:
The procedure described below is for the LH side. Use the same procedure for both the RH and LH sides, unless otherwise specified.

1. INSTALL NO. 3 BLACK OUT TAPE

(a) Application precautions (See page ET-129).
(b) Clean the attachment surface (using an infrared light) (See page ET-129).
(c) Clean the attachment surface (using a tape removal disc) (See page ET-129).
(d) Apply new black out tape to the positions shown in the illustration.

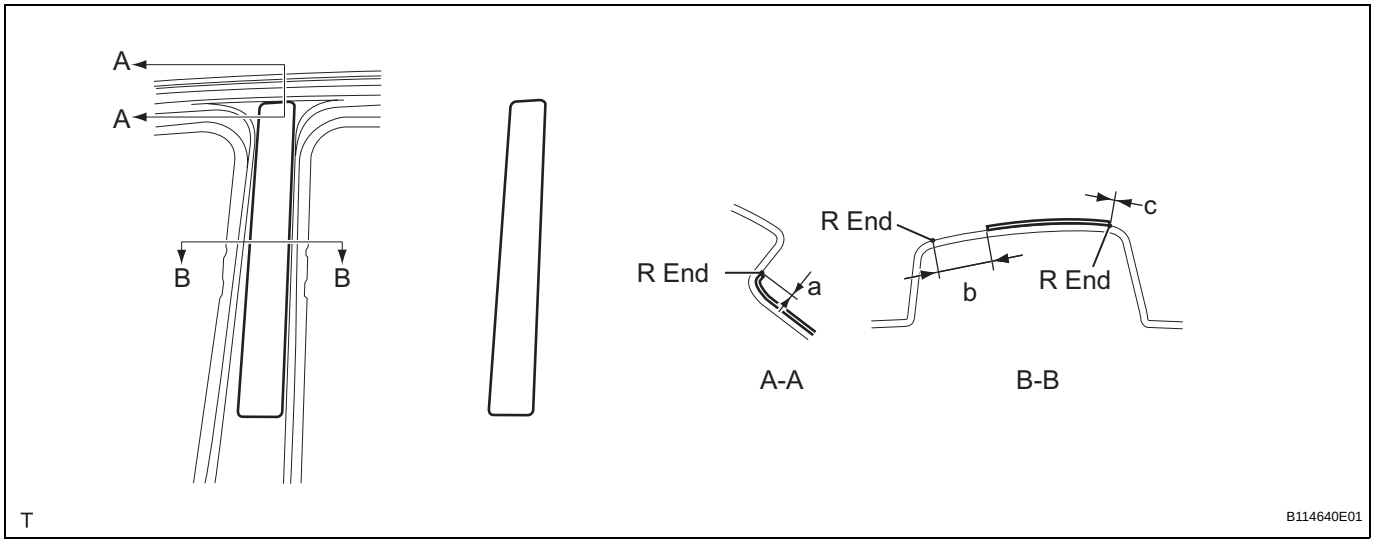

Installation position

Mark	Measurement (along surface)
a	+-1 mm (+-0.039in.)
b	4 mm or more (0.157 in. or more)
c	+-1 mm (+-0.039in.)