HYBRID CONTROL SYSTEM

LOCATION

2103D–01

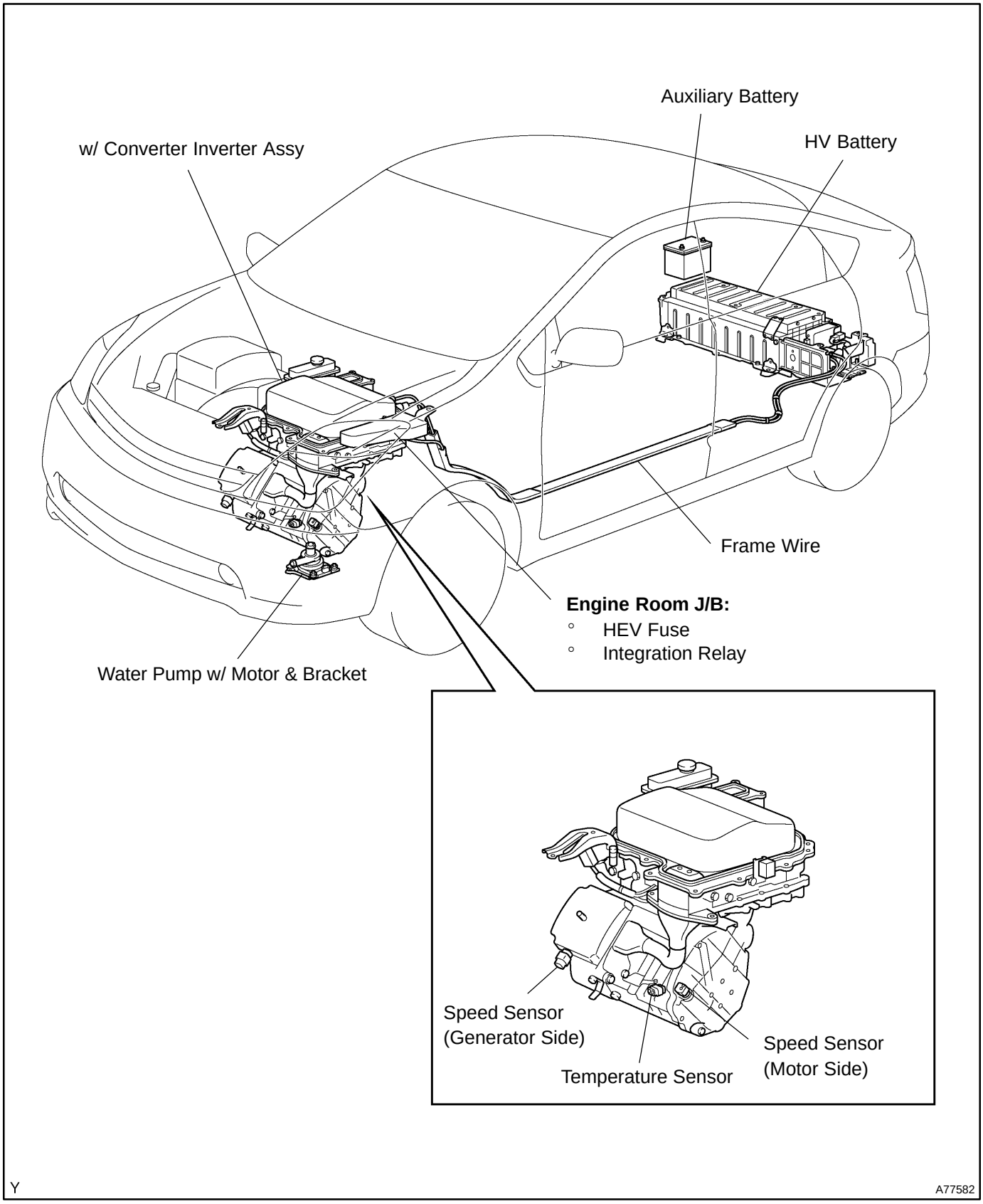

cardiagn.com

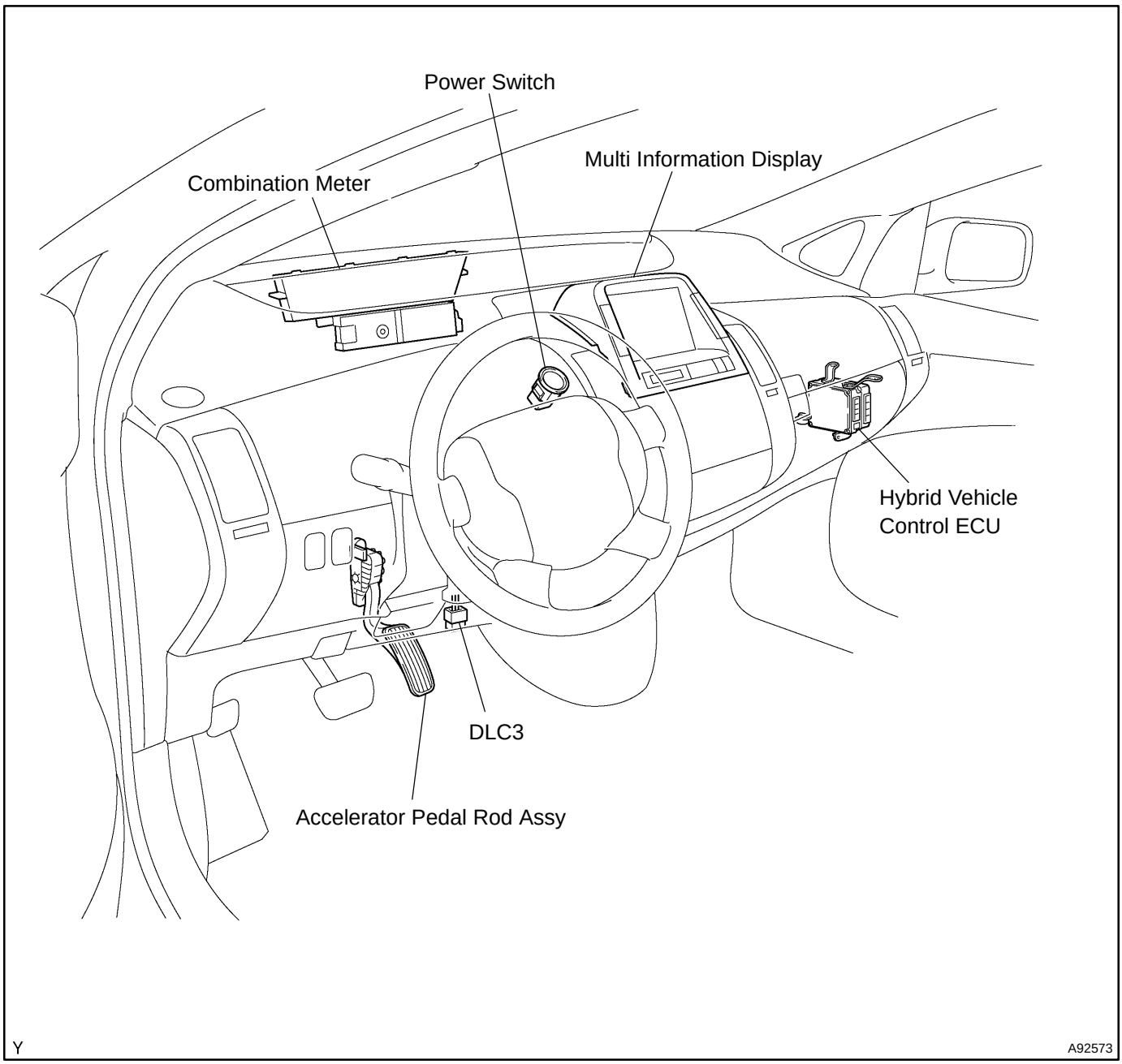

cardiagn.com

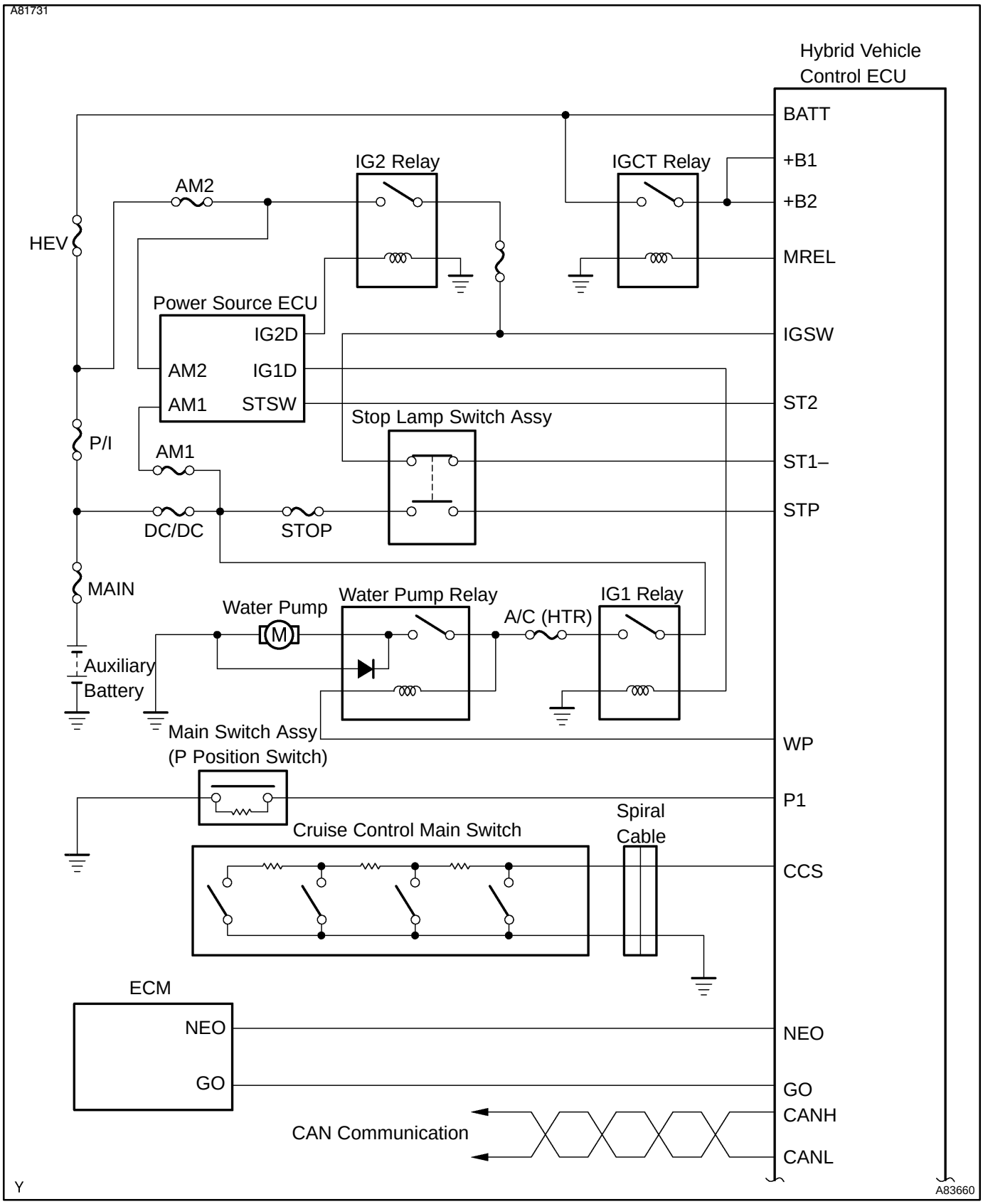

cardiagn.com

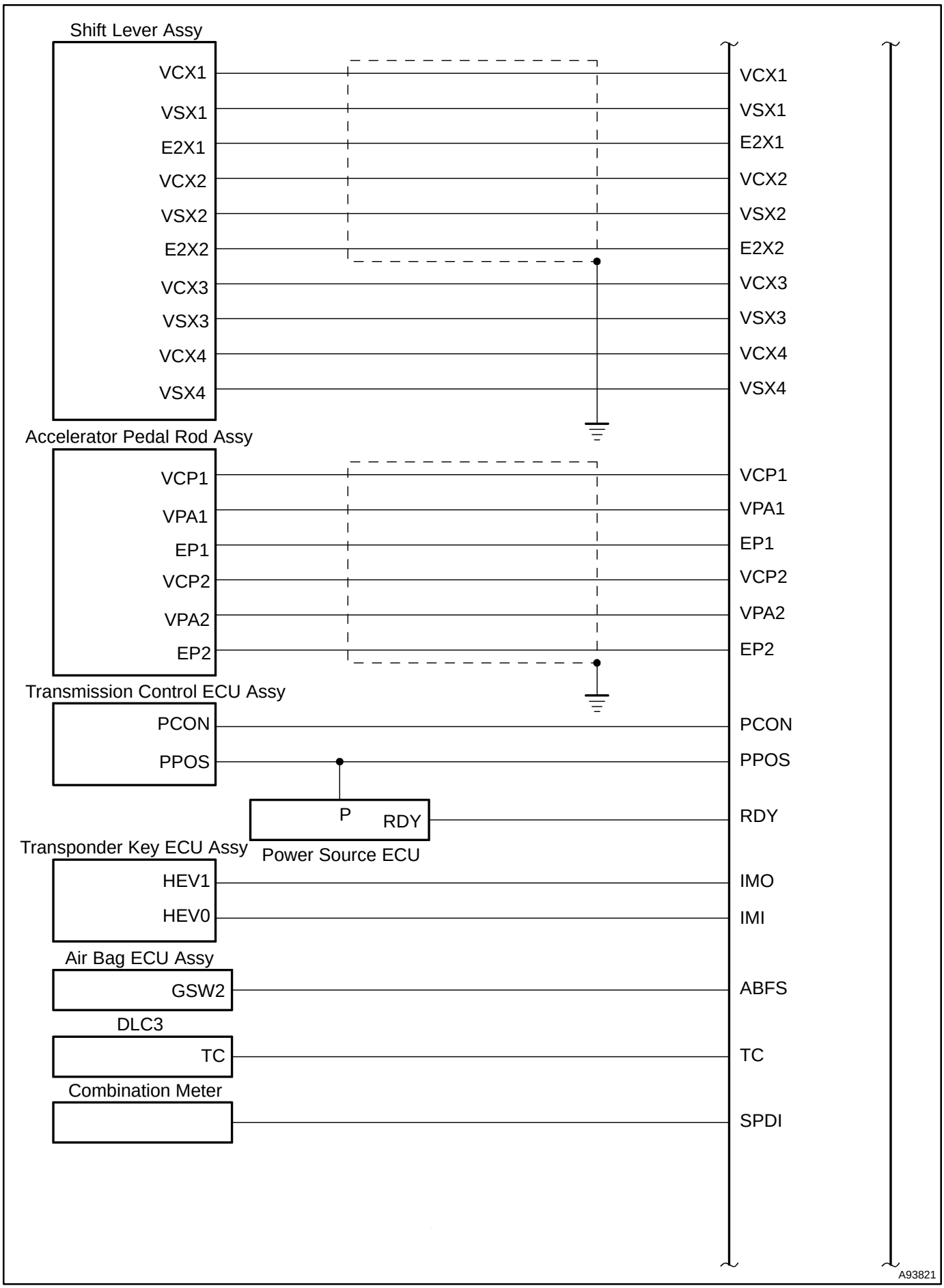

cardiagn.com

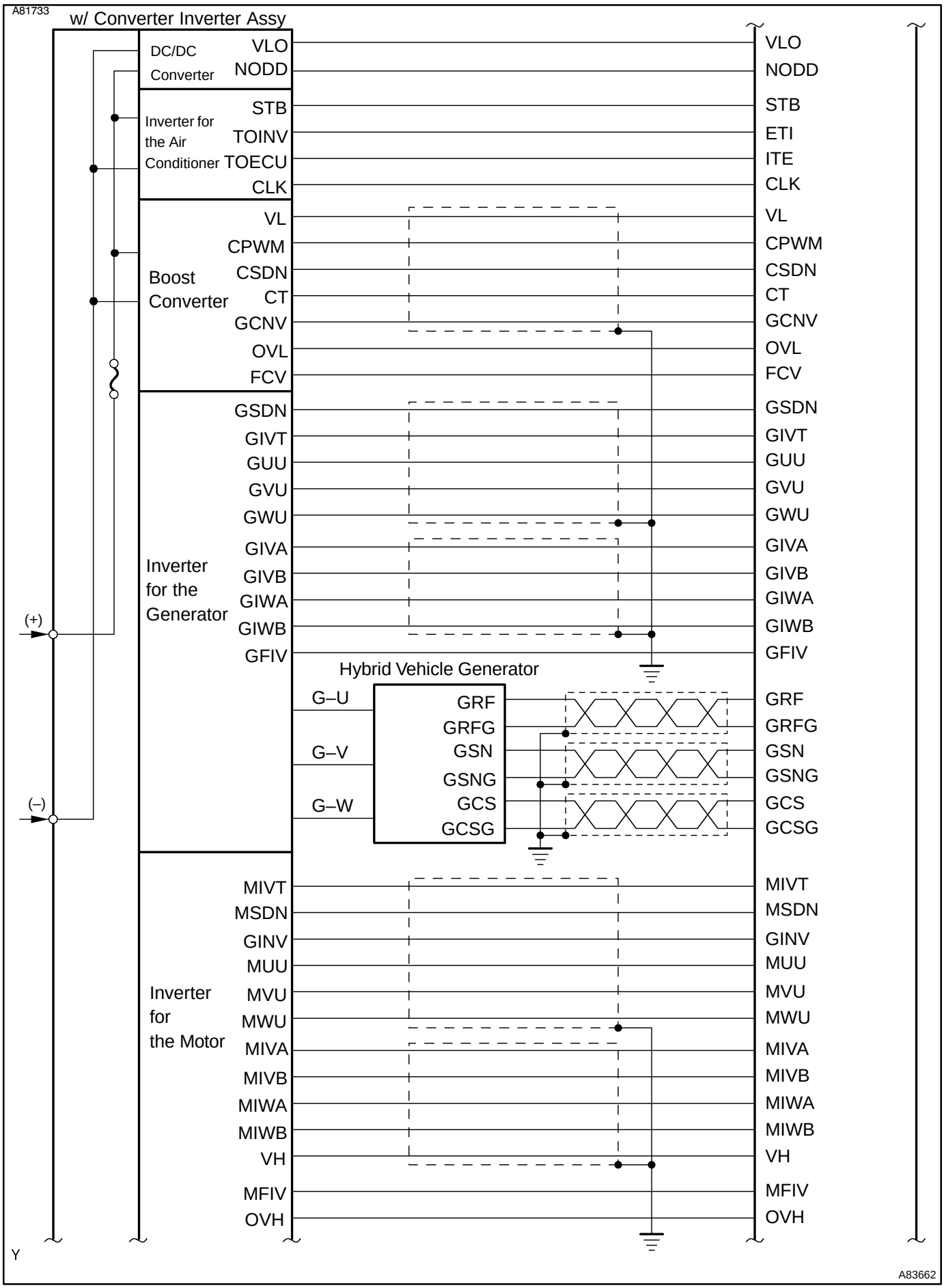

cardiagn.com

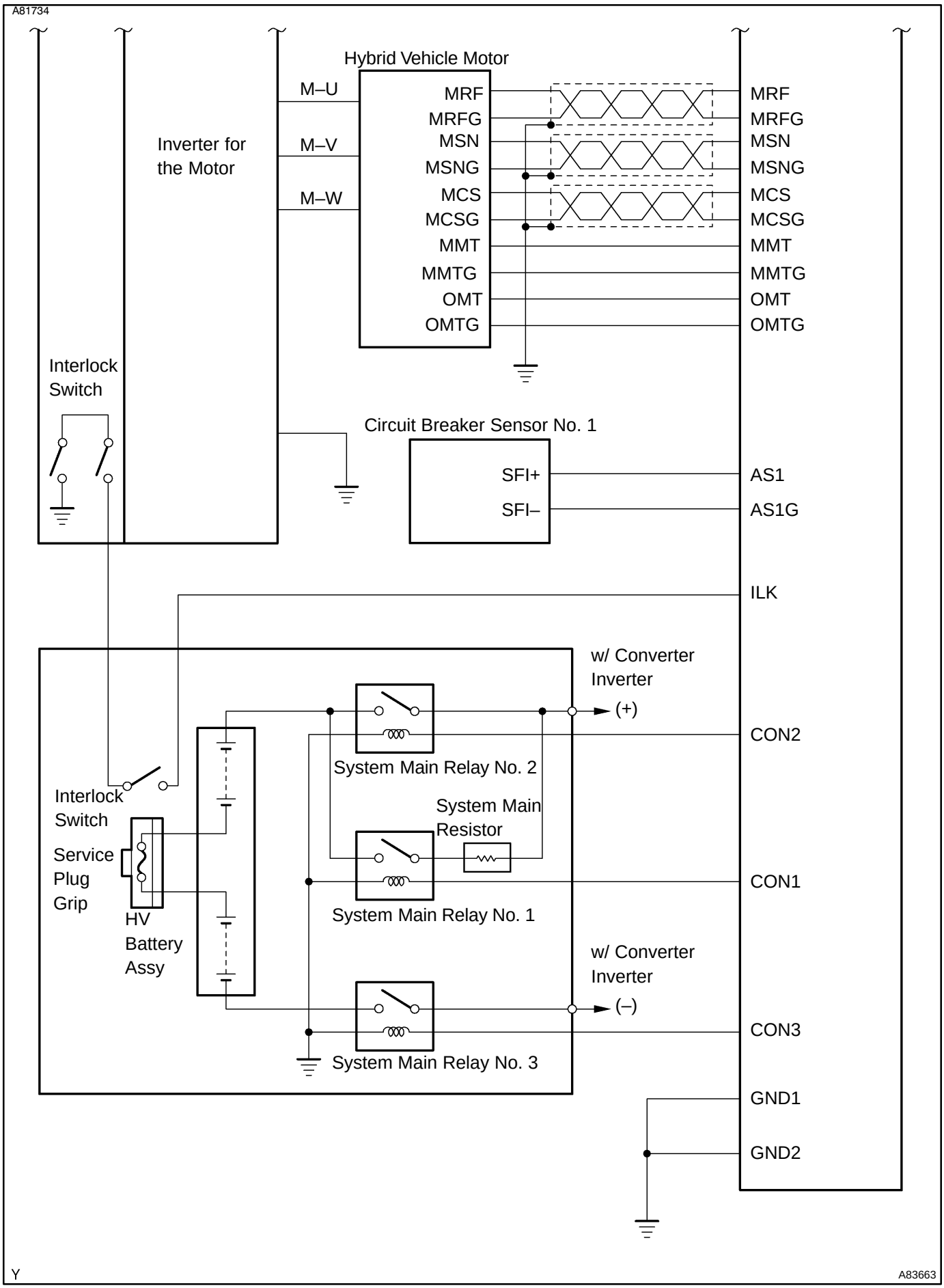

cardiagn.com

2103E–01

PRECAUTION

CAUTION:

The hybrid system uses high voltage circuits, so improper handling could cause an electric shock or leakage. During service (e.g. installing or removing the parts, inspection, replacing the parts), be sure to follow the procedures below.

1. DISCONNECT POWER SOURCE WHEN PERFORMING WORK ON HIGH VOLTAGE SYSTEM

(a) Ensure that the power switch is OFF.

(b) Disconnect the negative terminal cable from the auxiliary battery (see page 21–116).

(c) Always wear insulating gloves (see item 2 below).

NOTICE:

DTCs will also be erased, so if necessary check DTCs before disconnecting the power source OFF.

(d) Remove the service plug grip (see page 21–116).

NOTICE:

- **After removing the service plug grip, do not operate the power switch as it may damage the hybrid vehicle control ECU.**
- **Keep the removed service plug grip in your pocket to prevent other technicians from reconnecting it while you are servicing the vehicle.**

(e) Leave the vehicle for 5 minutes.

HINT:

It takes 5 minutes for the high voltage condenser in the inverter to discharge its electricity.

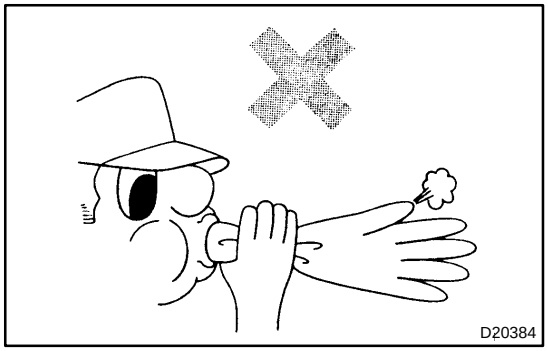

2. PRECAUTIONS FOR INSULATING GLOVES

(a) Before wearing, ensure that the insulating gloves are not damaged with tears, holes or cracks.

(b) Do not wear wet gloves.

3. PRECAUTIONS FOR WIRE HARNESS AND CONNECTOR

(a) The wire harnesses and connectors with high voltage circuits are colored orange. In addition, high voltage parts such as the HV battery are affixed with a ”High Voltage” caution label. Be careful not to touch these wires.

4. PRECAUTIONS WHEN PERFORMING SERVICE OR INSPECTIONS

(a) Always disconnect the power source before starting work (see item 1 above).

(b) Always wear insulating gloves when inspecting or servicing any high voltage wires and parts.

(c) Alert other technicians that you are working on the high voltage systems with a warning sign such as ”High Voltage Work: Do Not Touch”.

cardiagn.com

(d) Do not carry any metal objects such as a mechanical pencil or a measuring tape that could fall and cause a short circuit.
(e) After removing any high voltage wires, insulate them immediately with insulation tape.
(f) Always tighten the high voltage screw terminals to the specified torque. Insufficient or excessive torque will cause malfunctions.
(g) After finishing work on the high voltage systems and before reinstalling the service plug, reconfirm that you have not left any parts or tools lying around, that the high voltage terminals are tightened and that the connectors are connected.

cardiagn.com

2103F–01

ON–VEHICLE INSPECTION

1. INSPECT INVERTER

NOTICE:

Wear insulating gloves.

HINT:

Check DTCs before performing the inspections of the converter and inverter, and perform the appropriate troubleshooting.

(a) Turn the power switch OFF.

(b) Remove the service plug grip (see page 21–116).

(c) Remove the inverter cover (see page 21–23).

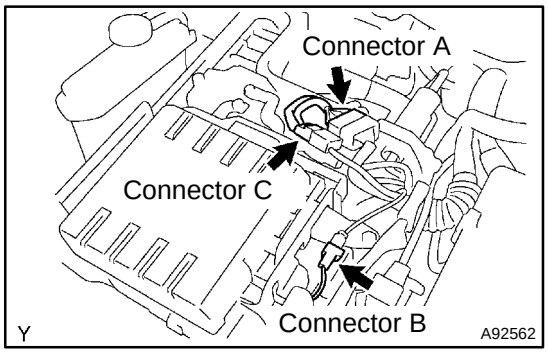

(d) Disconnect the connectors A and B shown in the illustration.

(e) Turn the power switch ON (IG).

If turning the power switch ON (IG) with the service plug grip removed, the DTC of the inter lock switch system will be output.

(f) Using a voltmeter, measure the voltage. Also, using an ohmmeter, measure the resistance.

NOTICE:

The inspection should be performed on the wire harness side, not on the terminal side.

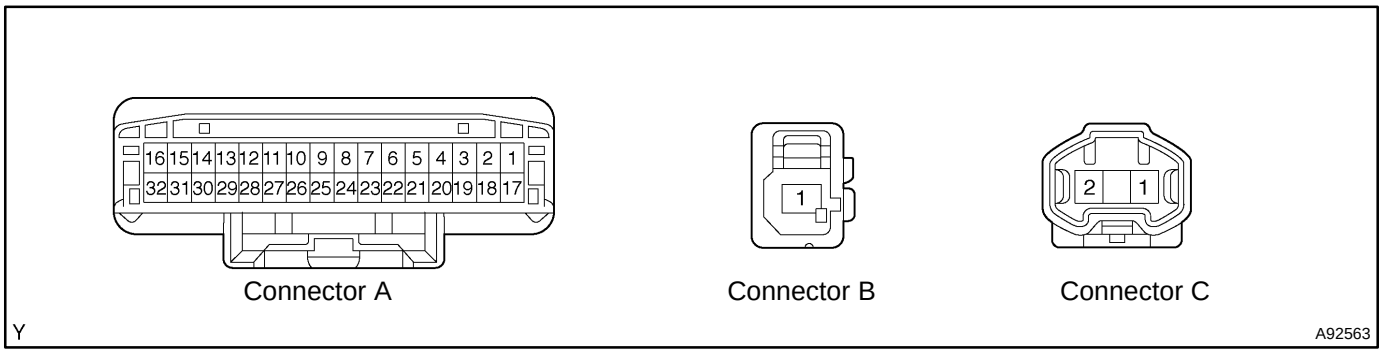

Standard:

Tester Connection	Measuring Condition	Specified Condition
A2 – A16 (GIVA – GINV)		Approximately 0 V
A3 – A16 (GIVB – GINV)		Approximately 0 V
A4 – A16 (GUU – GINV)		Approximately 14 to 16 V
A5 – A16 (GVU – GINV)		Approximately 14 to 16 V
A6 – A16 (GWU – GINV)		Approximately 14 to 16 V
A7 – A16 (MIVA – GINV)		Approximately 0 V
A8 – A16 (MIVB – GINV)		Approximately 0 V

cardiagn.com

Tester Connection	Measuring Condition	Specified Condition
A9 – A16 (MUU – GINV)		Approximately 14 to 16 V
A10 – A16 (MVU – GINV)		Approximately 14 to 16 V
A11 – A16 (MWU – GINV)		Approximately 14 to 16 V
A12 – A16 (VH – GINV)		Approximately 0.5 V
A13 – A32 (CPWM – GCNV)		Approximately 0 V
A14 – A32 (GSDN – GCNV)		Approximately 2 to 4.5 V
A15 – A32 (VL – GCNV)		Approximately 0.5 V
A16 – C2 (GINV – GND)		Approximately 0 V
A18 – A16 (GIWA – GINV)		Approximately 0 V
A19 – A16 (GIWB – GINV)		Approximately 0 V
A20 – A16 (CT – GINV)		Approximately 0 V
A21 – A16 (GIVT – GINV)		Approximately 2 to 4.5 V
A22 – A16 (GFIV – GINV)		Approximately 5 to 8 V
A23 – A16 (MIWA – GINV)		Approximately 0 V
A24 – A16 (MIWB – GINV)		Approximately 0 V
A25 – A16 (MSDN – GINV)		Approximately 0 V
A26 – A16 (MIVT – GINV)		Approximately 2 to 4.5 V
A27 – A16 (MFIV – GINV)		Approximately 5 to 8 V
A28 – A16 (OVH – GINV)		Approximately 5 to 8 V
A29 – A32 (CSDN – GCNV)		Approximately 0 V
A30 – A32 (FCV – GCNV)		Approximately 13.5 to 16.5 V
A31 – A32 (OVL – GCNV)		Approximately 13.5 to 16.5 V
A32 – C2 (GCNV – GND)		Approximately 0 V
B1 – Body ground (ILK – Body ground)	After installing the probe to the terminal, temporarily install the inverter cover. It does not have to be tightened with the bolts at this point.	Below 1 Ω
C1 – C2 (IGCT – GND)		Approximately 8 to 16 V
C2 – Body ground (GND – Body ground)		Below 1 Ω

If the standards are not met, replace the w/ inverter converter assembly.

cardiagn.com

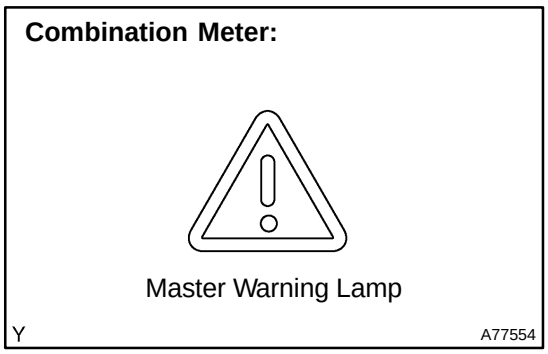

2. INSPECT CONVERTER

NOTICE:

Wear insulating gloves.

HINT:

If the HV system warning, master warning lamp and charge warning come on at the same time, check the DTCs and perform the appropriate troubleshooting.

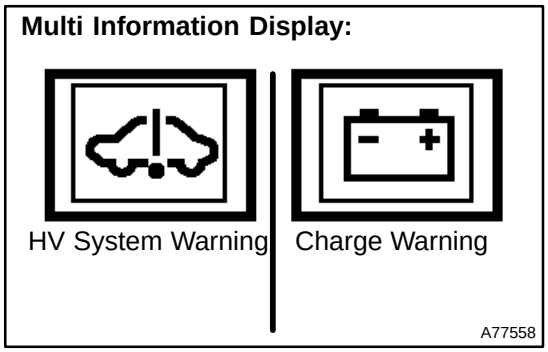

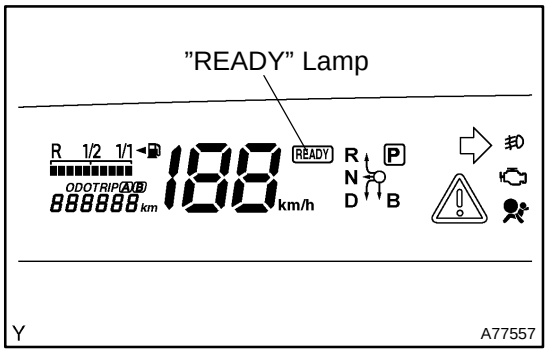

(a) Check the operation.

(1) Using a voltmeter, measure the voltage of the auxiliary battery terminal when the "READY" lamp is OFF and ON.

Standard:

"READY" Lamp	Voltage
ON	14 V
OFF	12 V

HINT:

When the "READY" lamp is ON, the converter outputs the voltage. When it is OFF, the auxiliary battery outputs the voltage.

(b) Inspect the output current.

(1) Disconnect the MG1 and MG2 power cables from the inveter (see page 21–23).

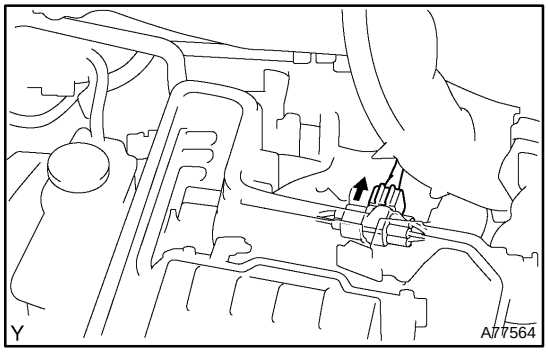

(2) Install a voltmeter and the AC/DC 400 A probe to the locations shown in the illustration.

(3) Connect the MG1 and MG2 power cables to the inverter (see page 21–23).

(4) With the "READY" lamp ON, operate the 12 V electrical devices one by one, then measure the output current.

Standard: Approximately 80 A or less

HINT:

If the output current is 0 A or greater than 80 A, check the input/output signal.

cardiagn.com

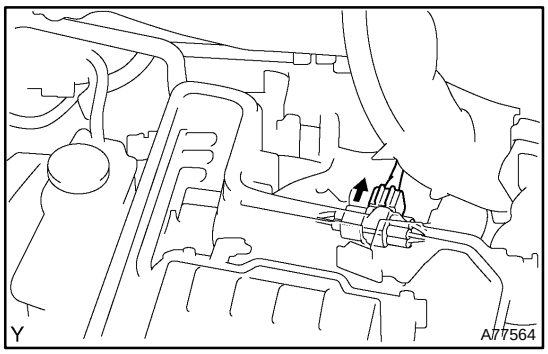

(c) Check the input/output signal.

(1) Disconnect the connectors shown in the illustration.

(2) Using a voltmeter, measure the voltage between the body ground and the terminal of the vehicle–side wire harness connector.

Standard:

Equal to the auxiliary battery terminal voltage

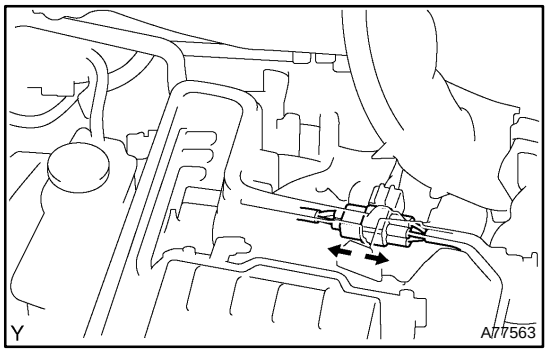

(3) Disconnect the connectors shown in the illustration.

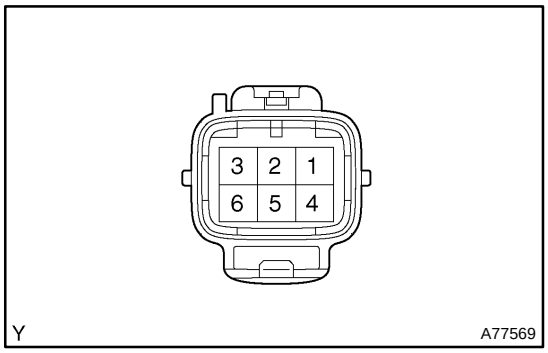

(4) Turn the power switch ON (IG). Using a voltmeter and ohmmeter, measure the voltage and resistance between the connector terminals on the vehicle harness side.

Standard:

Tester Connection	Specified Condition
Terminal 5 – Body ground (IGCT – Body ground)	8 to 16 V
Terminal 3 – Body ground (S – Body ground)	Equal to the auxiliary battery voltage
Terminal 1 – Body ground (S – Body ground)	120 to 140 Ω

If the standards are not met, replace the with inverter converter assembly.

cardiagn.com

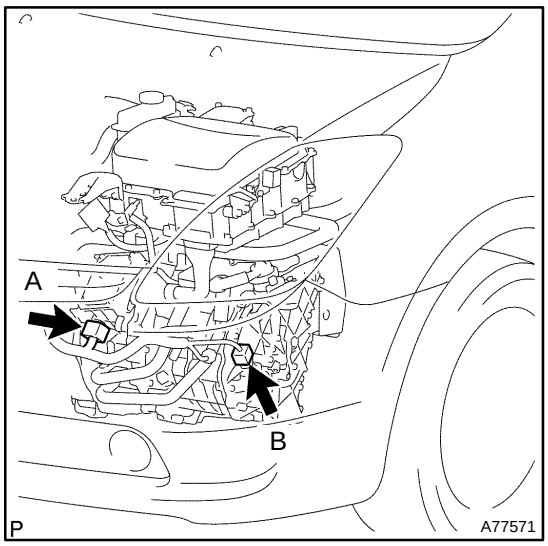

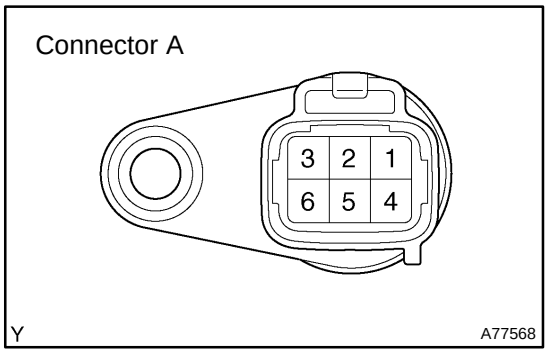

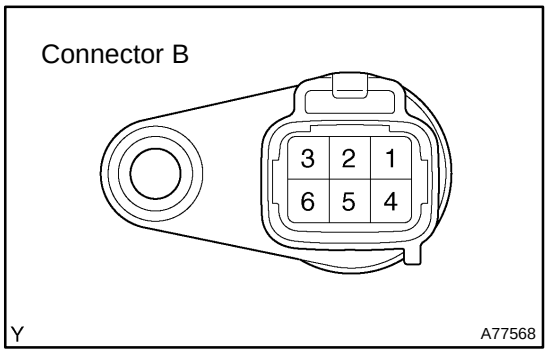

3. INSPECT SPEED SENSOR (RESOLVER)

(a) Using an ohmmeter, measure the resistance between the terminals.

Standard:

Tester Connection	Specified Condition
A1 – A4 (GCS – GCSG)	12.6 to 16.8 Ω
A2 – A5 (GSN – GSNG)	12.6 to 16.8 Ω
A3 – A6 (GRF – GRFG)	7.65 to 10.2 Ω
B1 – B4 (MRF – MRFG)	7.65 to 10.2 Ω
B2 – B5 (MSN – MSNG)	12.6 to 16.8 Ω
B3 – B6 (MCS – MCSG)	12.6 to 16.8 Ω
All of the above terminals – Transaxle housing	10 kΩ or higher

If the standards are not met, replace the hybrid vehicle transaxle assembly.

cardiagn.com

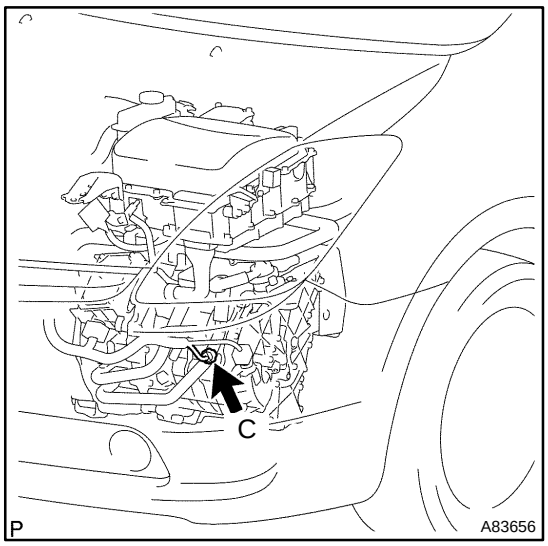

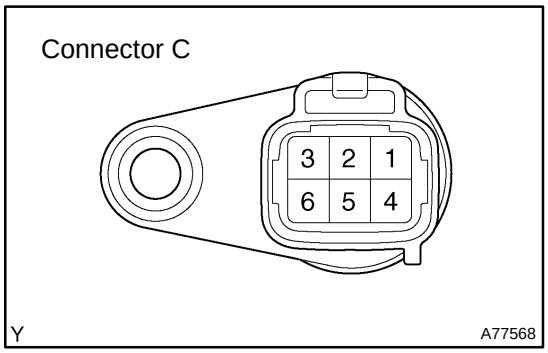

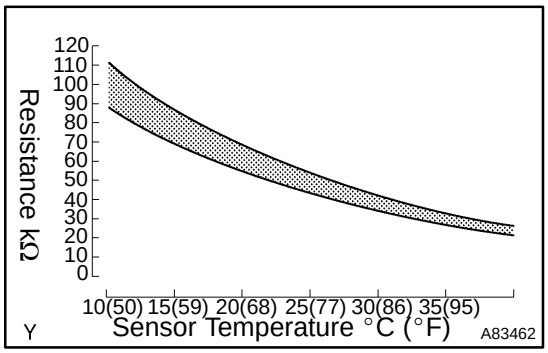

4. INSPECT TEMPERATURE SENSOR

(a) Using an ohmmeter, measure the resistance between the terminals.

Standard:

Tester Connection	Specified Condition
C1 – C4 (MMT – MMTG)	87.3 to 110.5 kΩ at 10°C(50°F) 23.8 to 28.5 kΩ at 40°C (104°F)
C3 – C6 (OMT – OMTG)	87.3 to 110.5 kΩ at 10°C(50°F) 23.8 to 28.5 kΩ at 40°C (104°F)
All of the above terminals – Transaxle housing	1 MΩ or higher

HINT:

The standard varies according to the sensor temperature.

If the standards are not met, replace the hybrid vehicle transaxle assembly.

cardiagn.com

5. INSPECT ACCELERATOR POSITION

NOTICE:

- **Do not remove the accelerator position sensor from the accelerator pedal.**
- **Perform the inspection on the hybrid vehicle control ECU side of the connector.**

(a) Turn the power switch ON (IG).

(b) Using a voltmeter, measure the voltage between the terminals.

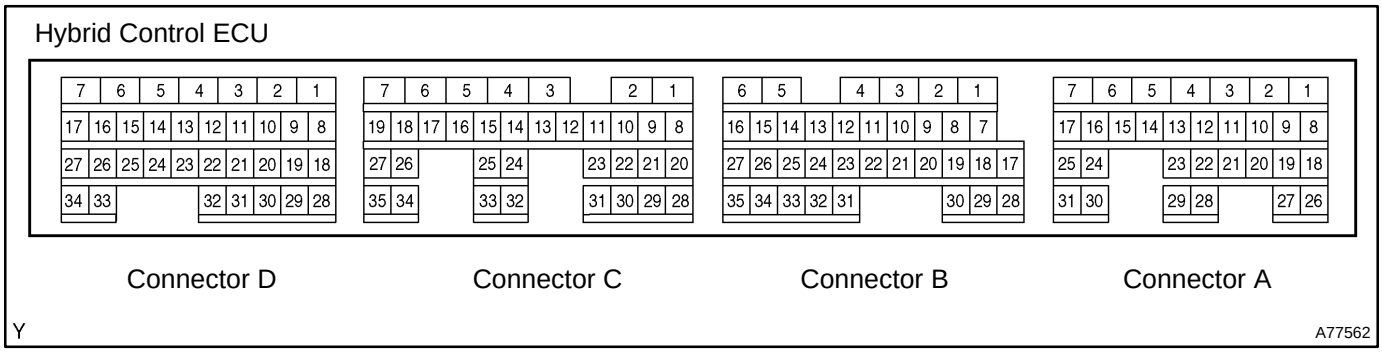

Standard:

Terminals	Measuring Condition	Specified Condition
B25 – B27 (VCP1 – EP1)	Normal	4.5 to 5.5 V
B26 – B27 (VPA1 – EP1)	Do not depress the accelerator pedal	0.5 to 1.1 V
B26 – B27 (VPA1 – EP1)	Gradually depress the accelerator pedal	The voltage increases slowly
B26 – B27 (VPA1 – EP1)	Fully depress the accelerator pedal	2.6 to 4.5 V
B33 – B35 (VCP2 – EP2)	Normal	4.5 to 5.5 V
B34 – B35 (VPA2 – EP2)	Do not depress the accelerator pedal	1.2 to 2.0 V
B34 – B35 (VPA2 – EP2)	Gradually depress the accelerator pedal	The voltage increases slowly
B34 – B35 (VPA2 – EP2)	Fully depress the accelerator pedal	3.4 to 5.3 V

If the standards are not met, replace the accelerator pedal rod assembly.

cardiagn.com

2103G–01

INSPECTION

1. INSPECT INTEGRATION RELAY (IGCT RELAY)

(a) Check the HEV fuse.

(1) Remove the 20 A fuse. Using an ohmmeter, measure the resistance between the terminals.

Standard: Below 1 Ω

If the standard is not met, replace the fuse.

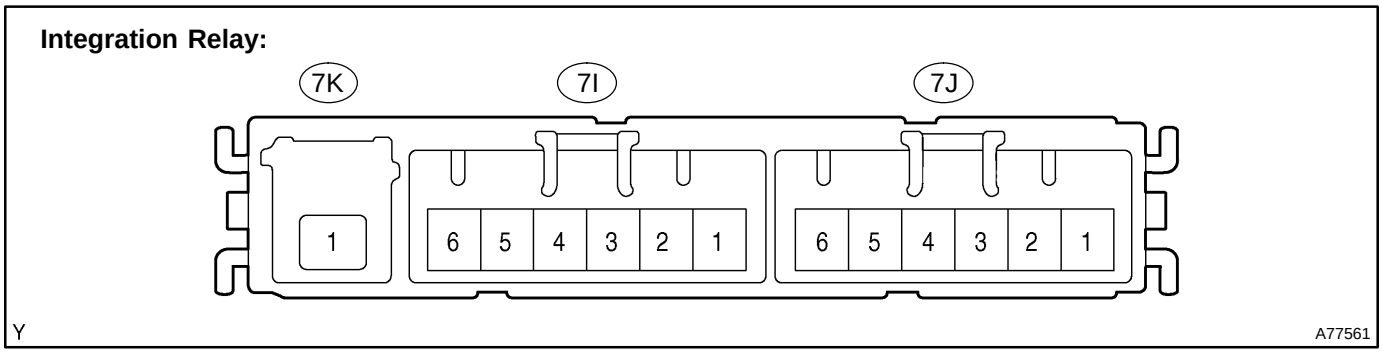

(b) Check the IGCT relay.

(1) Using an ohmmeter, measure the resistance between the terminals.

Standard:

Tester Connection	Specified Condition
7J–1 – 7J–4	10 kΩ or higher
7J–1 – 7K–1	Below 1 Ω
7J–2 – 7J–3	Below 1 Ω
7J–4 – 7K–1	10 kΩ or higher

If the standards are not met, replace the integration relay.

(2) Using an ohmmeter, measure the resistance between the terminals when battery voltage is applied to terminals 7J–2 and 7J–3.

Standard:

Tester Connection	Specified Condition
7J–1 – 7J–4	Below 1 Ω
7J–1 – 7K–1	Below 1 Ω

If the standards are not met, replace the integration relay.

cardiagn.com

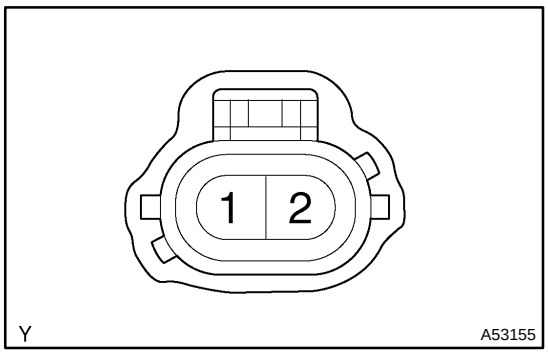

2. INSPECT WATER W/MOTOR & BRACKET PUMP ASSY

(a) Check the operation.

(1) Connect the battery positive terminal to terminal 1 and the battery negative terminal to terminal 2, then check that the pump motor operates properly.

NOTICE:

- **Do not connect the positive and negative poles of the battery to the wrong terminals.**
- **Complete the check within 10 seconds of connection.**

If it does not operate properly, replace the water pump with motor and bracket.

cardiagn.com

W/CONVERTER INVERTER ASSY

COMPONENTS

2103H–01

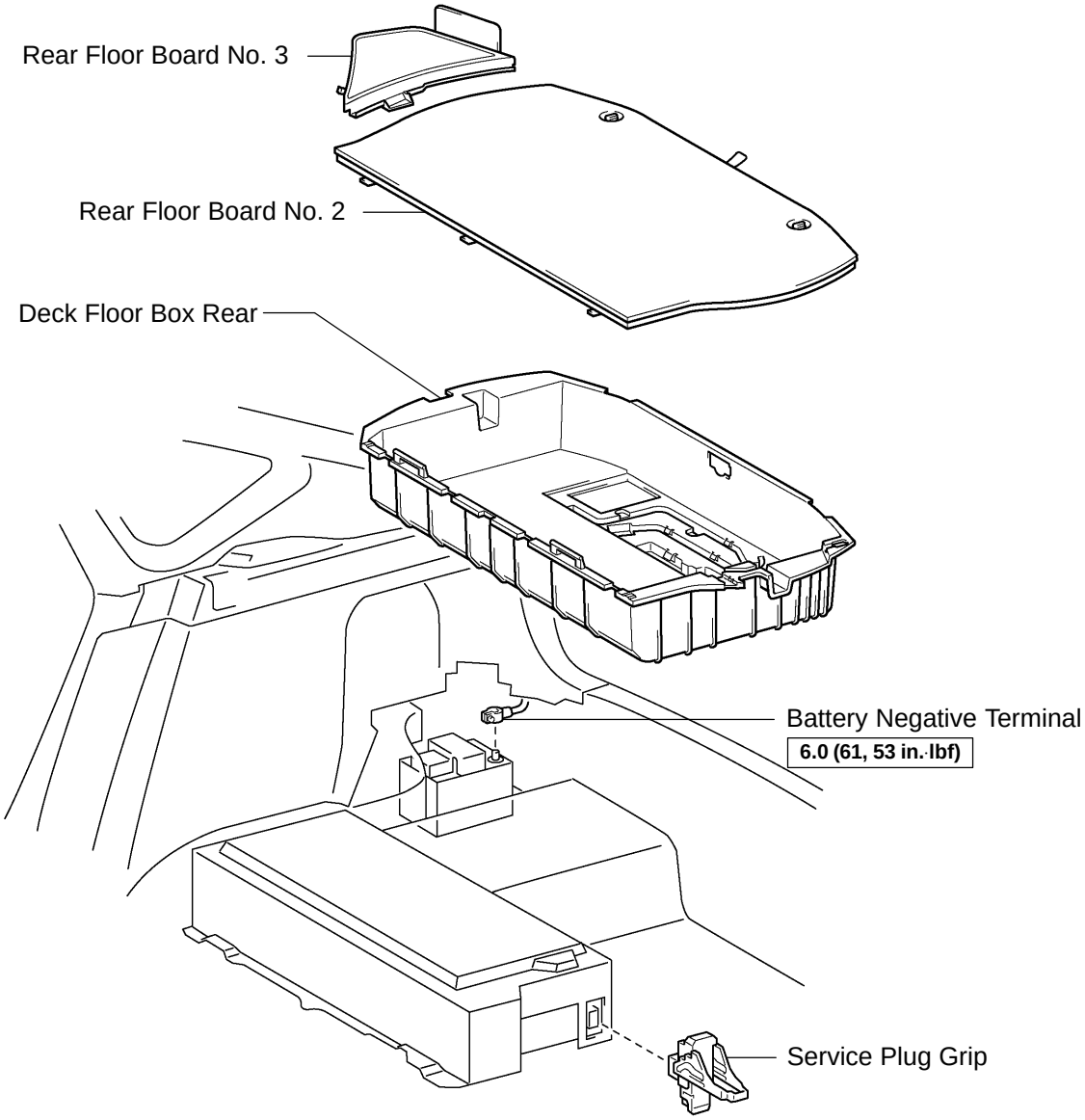

o N·m (kgf·cm, ft·lbf): Specified torque

A83616

cardiagn.com

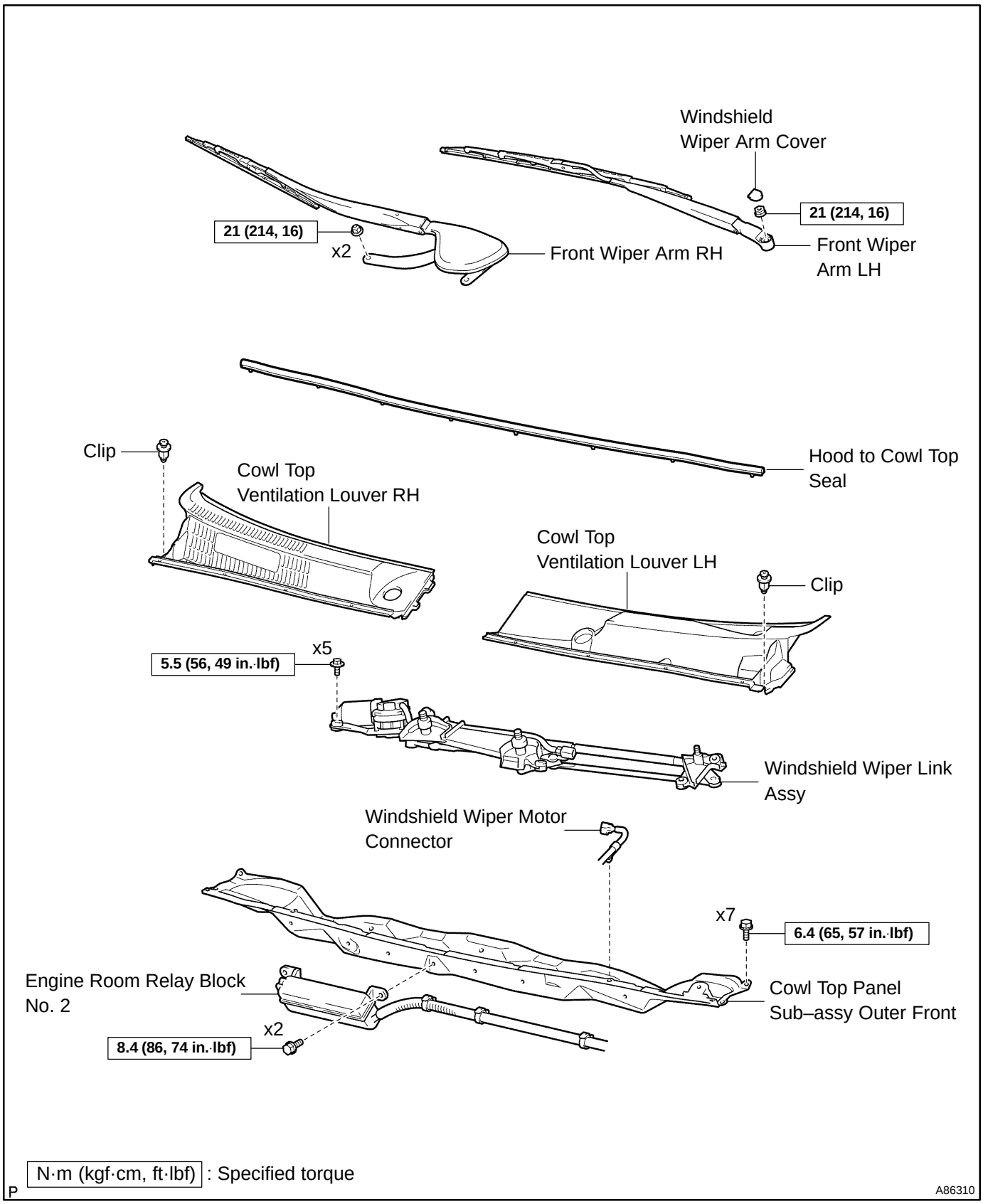

cardiagn.com

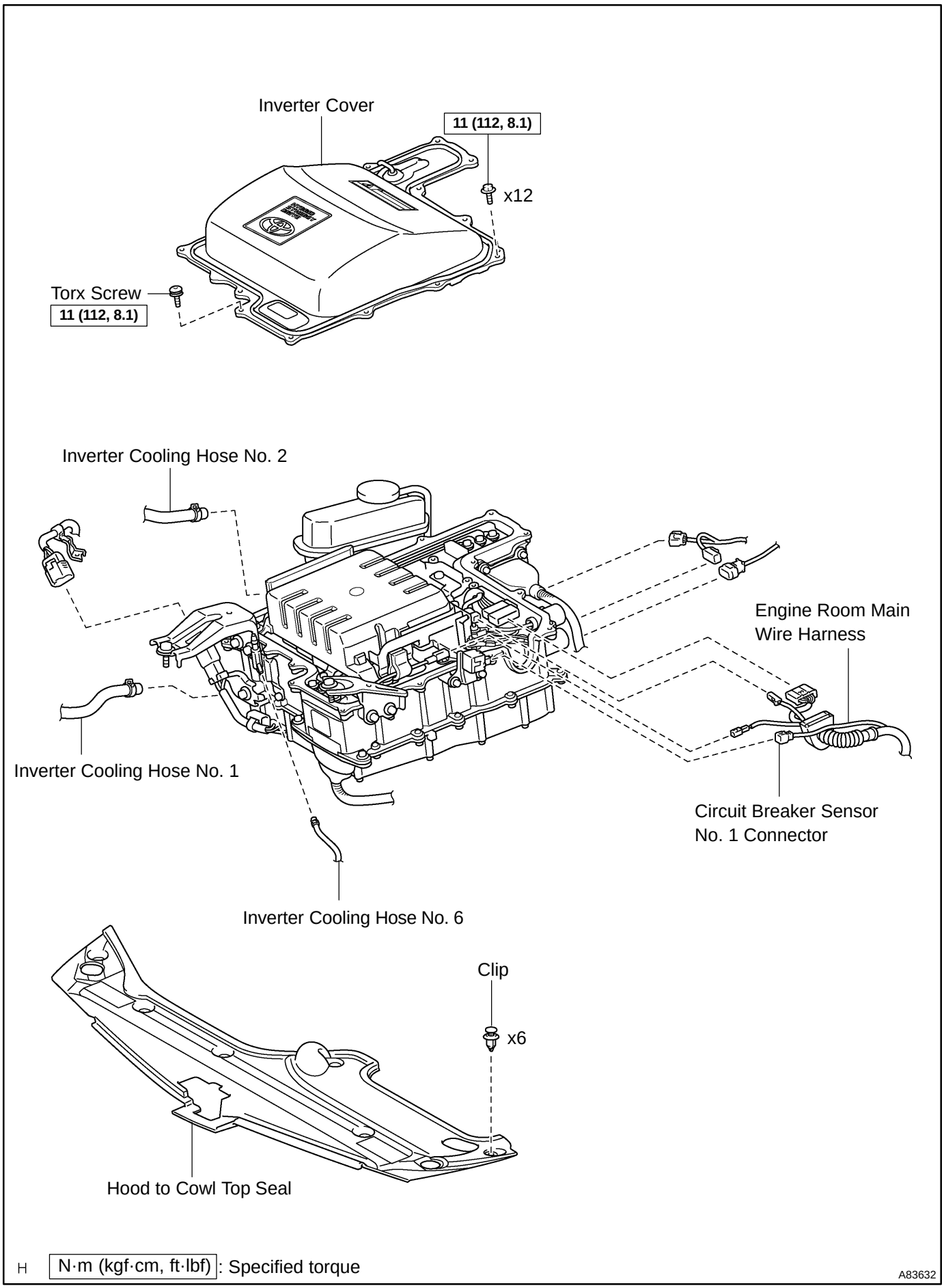

cardiagn.com

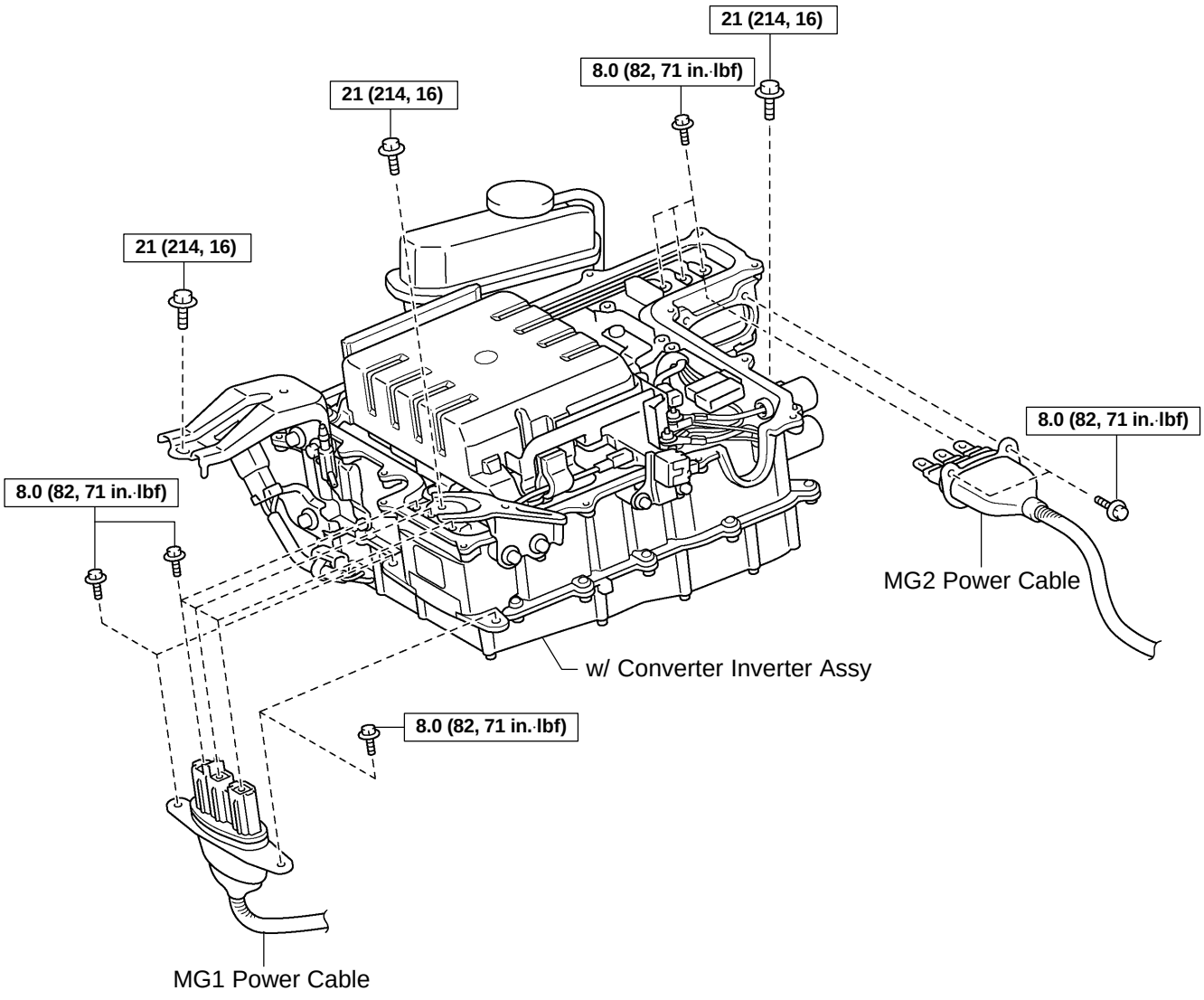

H N·m (kgf·cm, ft·lbf): Specified torque

A83631

cardiagn.com

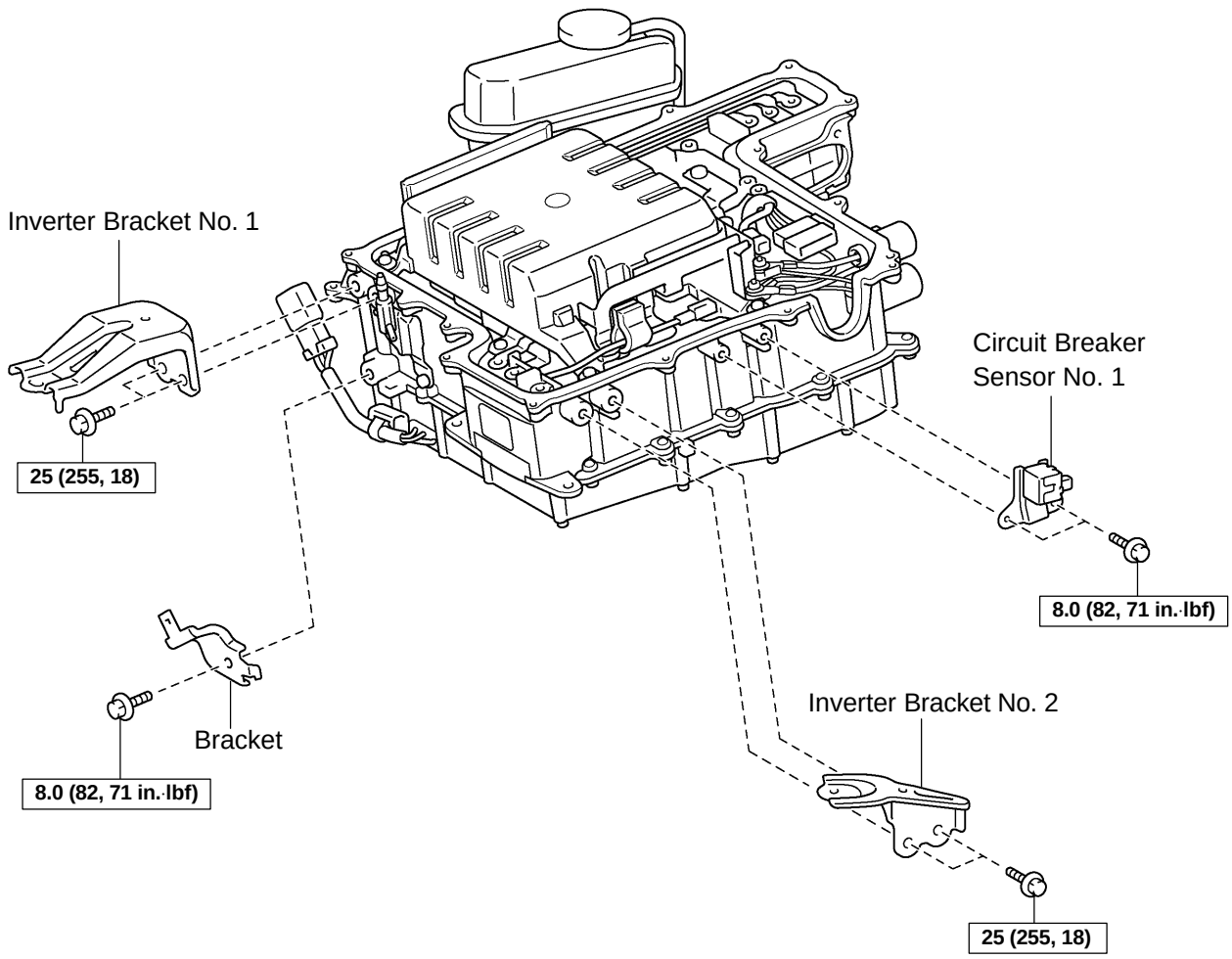

H N·m (kgf·cm, ft·lbf): Specified torque

A83630

cardiagn.com

REPLACEMENT

NOTICE:

- **When working on the high voltage systems, always wear insulating gloves.**
- **After removing the service plug grip, do not operate the power switch as it may damage the hybrid vehicle control ECU.**
- **Keep the removed service plug in your pocket to prevent other technicians from reconnecting it while you are servicing the vehicle.**
- **After removing the service plug grip, do not touch the high voltage connectors and terminals for 5 minutes.**

1. **PRECAUTION (See page 21–7)**
2. **REMOVE ENGINE UNDER COVER LH**
3. **REMOVE ENGINE UNDER COVER RH**
4. **DRAIN HV COOLANT (See page 22–4)**
5. **REMOVE REAR FLOOR BOARD NO.2 (See page 21–116)**
6. **REMOVE DECK FLOOR BOX REAR (See page 21–116)**
7. **REMOVE REAR FLOOR BOARD NO.3 (See page 21–116)**
8. **DISCONNECT BATTERY NEGATIVE TERMINAL (See page 21–116)**
9. **REMOVE SERVICE PLUG GRIP (See page 21–116)**
10. **REMOVE FRONT WIPER ARM HEAD CAP (See page 66–14)**
11. **REMOVE FR WIPER ARM LH (See page 66–14)**
12. **REMOVE FR WIPER ARM RH (See page 66–14)**
13. **REMOVE HOOD TO COWL TOP SEAL (See page 66–14)**
14. **REMOVE COWL TOP VENTILATOR LOUVER LH (See page 66–14)**
15. **REMOVE COWL TOP VENTILATOR LOUVER RH (See page 66–14)**
16. **REMOVE WINDSHIELD WIPER MOTOR & LINK ASSY (See page 66–14)**
17. **REMOVE COWL TOP PANEL SUB–ASSY OUTER FRONT (See page 11–15)**
18. **REMOVE RADIATOR SUPPORT OPENING COVER**

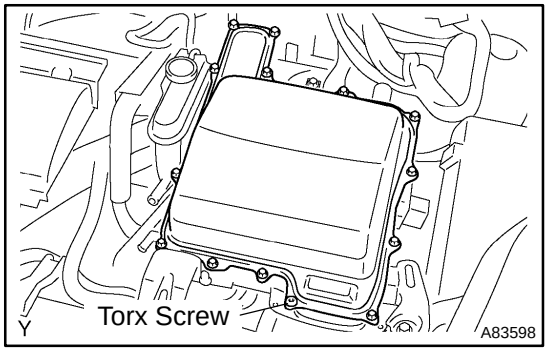

19. **REMOVE INVERTER COVER**
(a) Using a T30 Torx socket wrench, remove the Torx screw.
(b) Remove the 12 bolts and inverter cover.

cardiagn.com

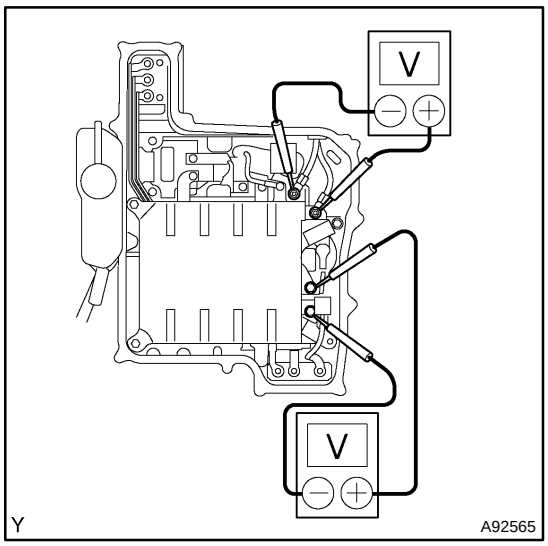

20. VERIFY THAT VOLTAGE OF W/CONVERTER INVERTER ASSY IS 0V

NOTICE:

Wear insulating gloves.

(a) Using a voltmeter, measure the voltage of the high voltage DC line.

Standard: 0 V

HINT:

Use measuring range of DC 400 V or more on the voltmeter.

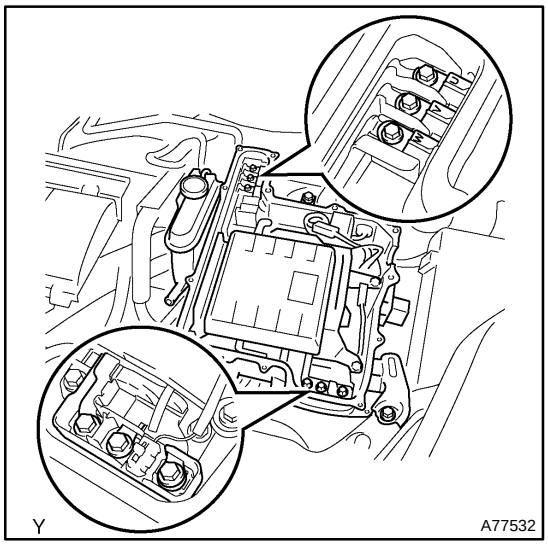

(b) Using the voltmeter, measure the voltage between the terminals of the three phase connector (U – V, V – W, U – W).

Standard: 0 V

HINT:

Use measuring range of DC 400 V or more on the voltmeter.

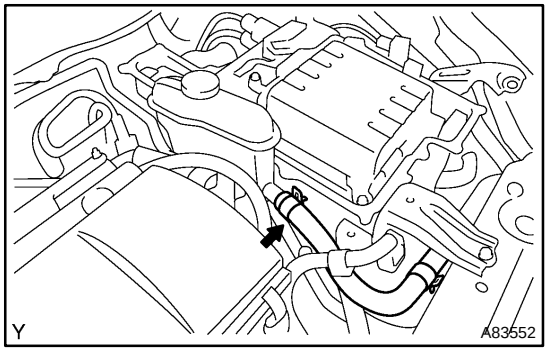

21. DISCONNECT INVERTER COOLING HOSE NO.2

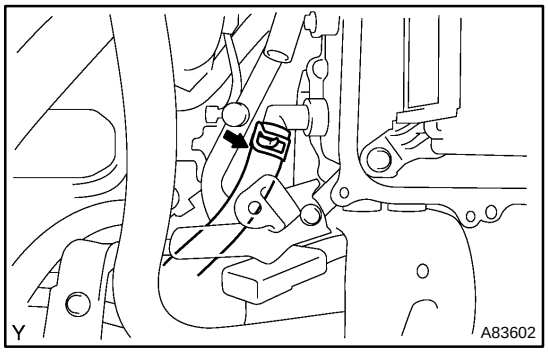

22. DISCONNECT INVERTER COOLING HOSE NO.1

cardiagn.com

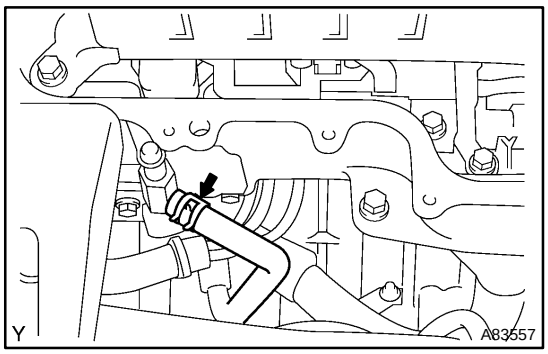

23. DISCONNECT INVERTER COOLING HOSE NO.6

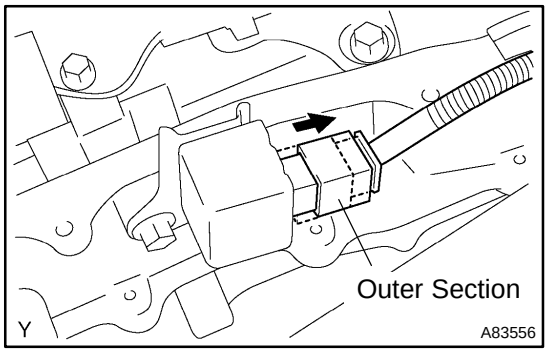

24. SEPARATE CIRCUIT BREAKER SENSOR NO.1

(a) Move the outer section to the wire harness side as illustrated, then disconnect the circuit breaker sensor No. 1.

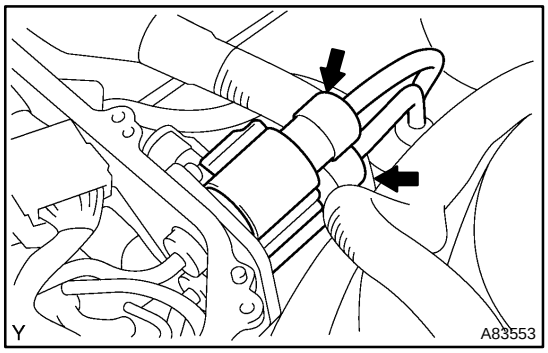

25. DISCONNECT FRAME WIRE

NOTICE:

- **Wear insulating gloves.**
- **After removing the service plug grip, be sure to wait for at least 5 minutes before performing any work.**
- **Insulate the electrode and connector parts with insulating tape.**

(a) Remove the 2 frame wire connectors from the with converter inverter assembly.

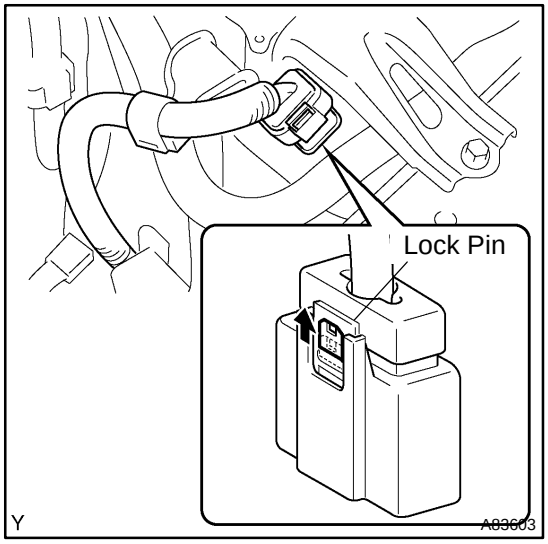

26. REMOVE W/CONVERTER INVERTER ASSY

(a) Using a small screwdriver, lift up the lock pin (green) as illustrated to unlock.

NOTICE:

Wear insulating gloves.

(b) Disconnect the connector for the air conditioner inverter.

NOTICE:

Wear insulating gloves.

cardiagn.com

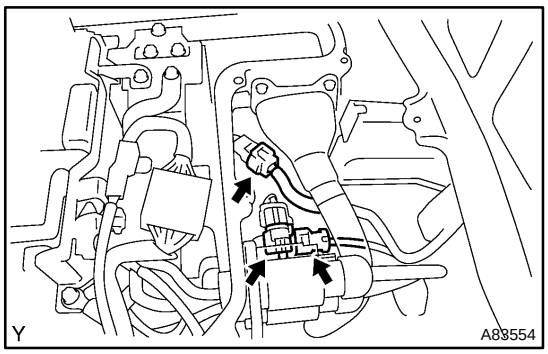

(c) Disconnect the 3 connectors shown in the illustration.

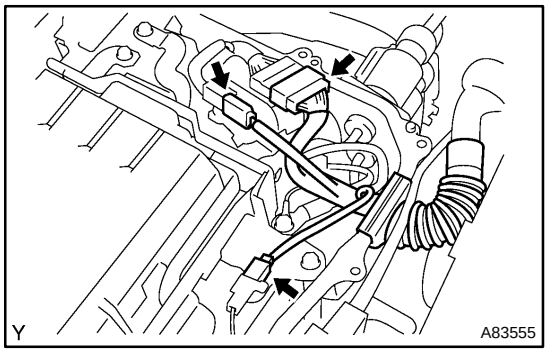

(d) Disconnect the 3 connectors shown in the illustration and the engine main wire harness.

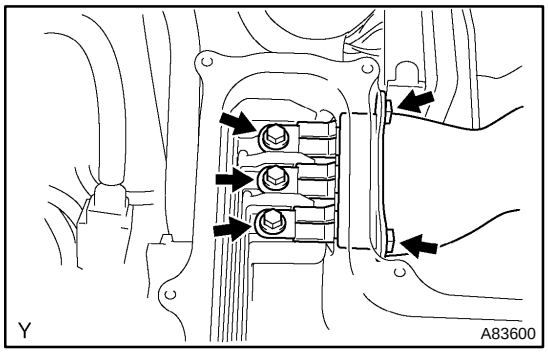

(e) Remove the 5 bolts, then disconnect the MG2 power cable.

NOTICE:

- **Wear insulating gloves.**
- **Insulate the connector parts with insulating tape.**

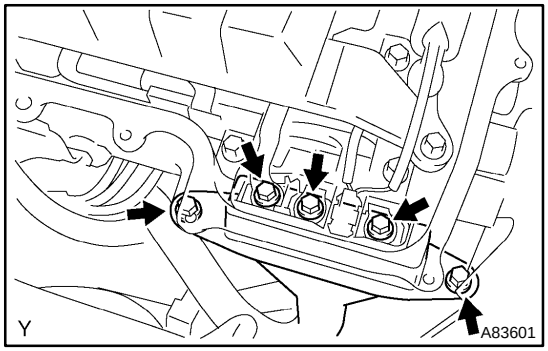

(f) Remove the 5 bolts, then disconnect the MG1 power cable.

NOTICE:

- **Wear insulating gloves.**
- **Insulate the connector parts with insulating tape.**

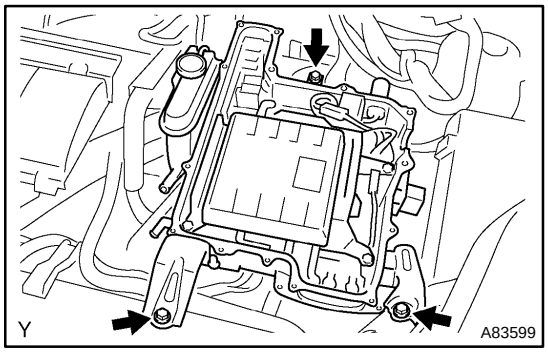

(g) Remove the 3 bolts and the with converter inverter assembly.

cardiagn.com

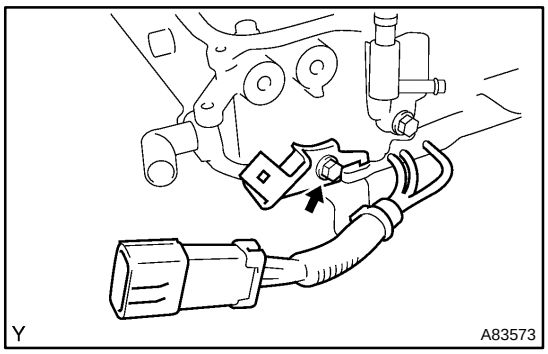

(h) Disconnect the connector for the air conditioner inverter from the bracket.

(i) Remove the bolt and connector bracket for the air conditioner inverter.

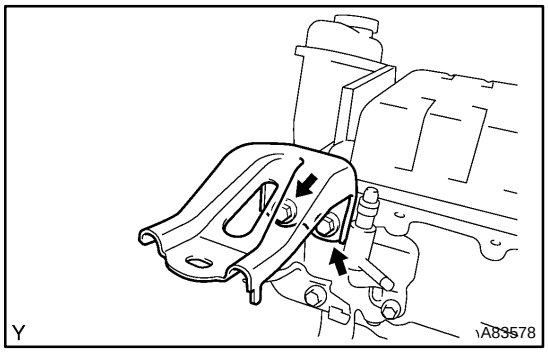

27. REMOVE INVERTER BRACKET NO.1

(a) Remove the 2 bolts and inverter bracket No. 1.

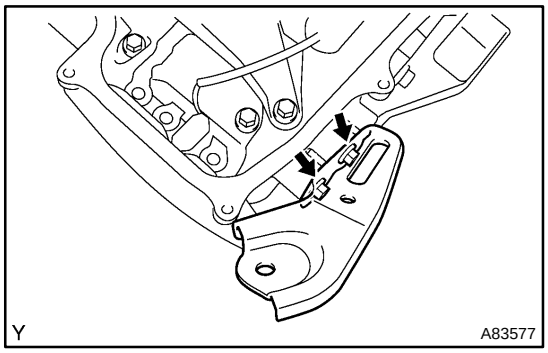

28. REMOVE INVERTER BRACKET NO.2

(a) Remove the 2 bolts and inverter bracket No. 2.

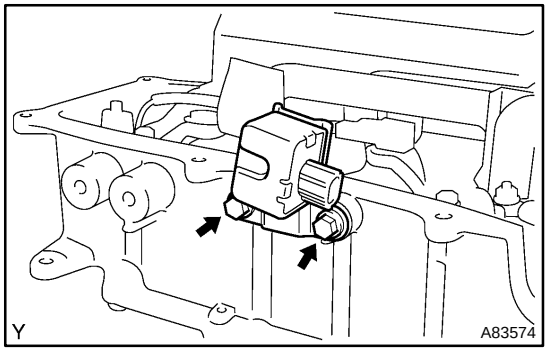

29. REMOVE CIRCUIT BREAKER SENSOR NO.1

(a) Remove the 2 bolts and circuit breaker sensor No. 1.

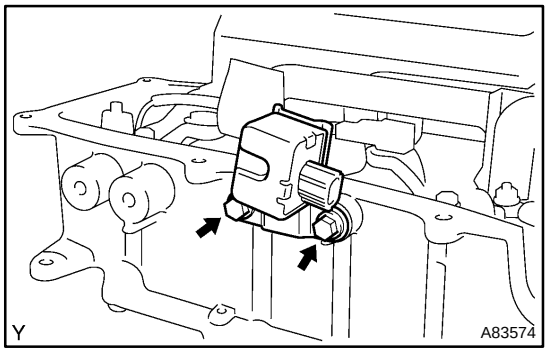

30. INSTALL CIRCUIT BREAKER SENSOR NO.1

(a) Install the circuit breaker sensor No. 1 with the 2 bolts.
Torque: 8.0 N·m (82 kgf·cm, 71 in.·lbf)

cardiagn.com

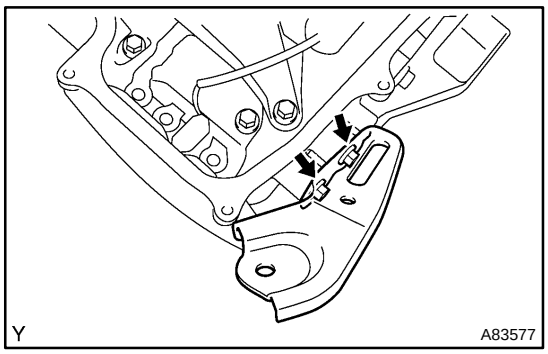

31. INSTALL INVERTER BRACKET NO.2

(a) Install the inverter bracket No. 2 with the 2 bolts.
Torque: 25 N·m (255 kgf·cm, 18 ft·lbf)

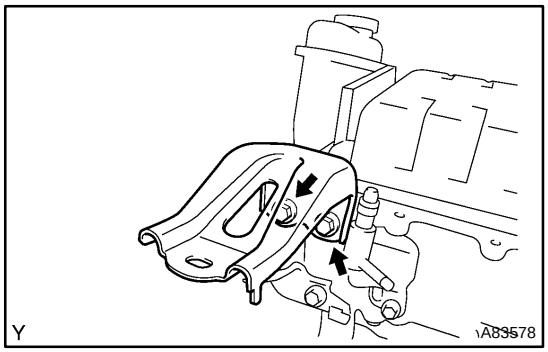

32. INSTALL INVERTER BRACKET NO.1

(a) Install the inverter bracket No. 1 with the 2 bolts.
Torque: 25 N·m (255 kgf·cm, 18 ft·lbf)

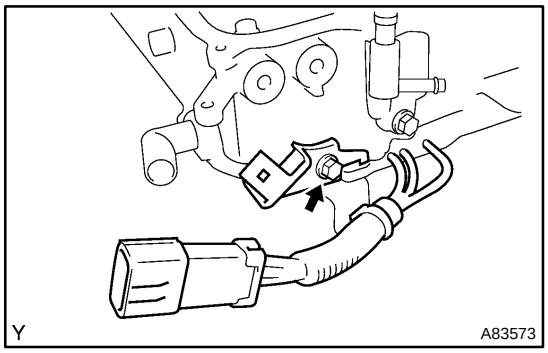

33. INSTALL W/CONVERTER INVERTER ASSY

(a) Install the connector bracket for the air conditioner inverter with the bolt.
Torque: 8.0 N·m (82 kgf·cm, 71 in.·lbf)

(b) Install the connector for the air conditioner inverter on the bracket.

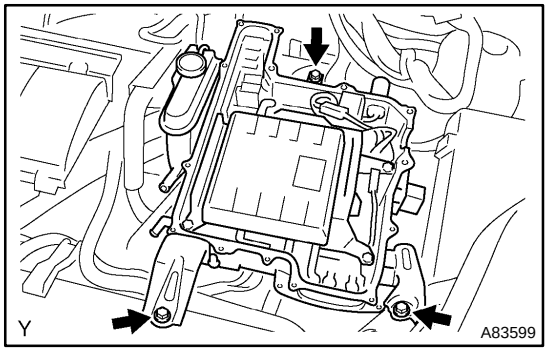

(c) Install the with converter inverter assembly with the 3 bolts.

NOTICE:
Wear insulating gloves.
Torque: 21 N·m (214 kgf·cm, 16 ft·lbf)

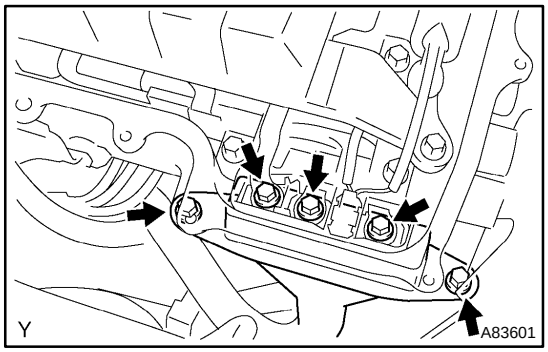

(d) Install the MG1 power cable to the MG1 power cable terminal with the 5 bolts.

NOTICE:
Wear insulating gloves.
Torque: 8.0 N·m (82 kgf·cm, 71 in.·lbf)

cardiagn.com

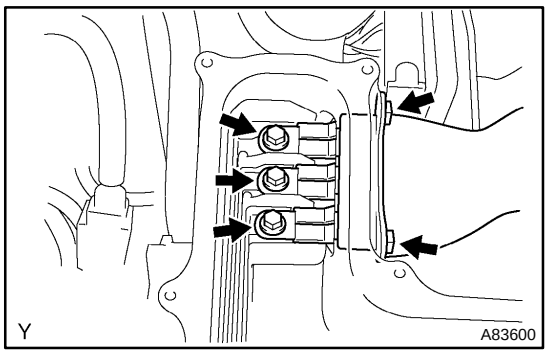

(e) Install the MG2 power cable to the MG2 power cable terminal with the 3 bolts.

NOTICE:

Wear insulating gloves.

Torque: 8.0 N·m (82 kgf·cm, 71 in.·lbf)

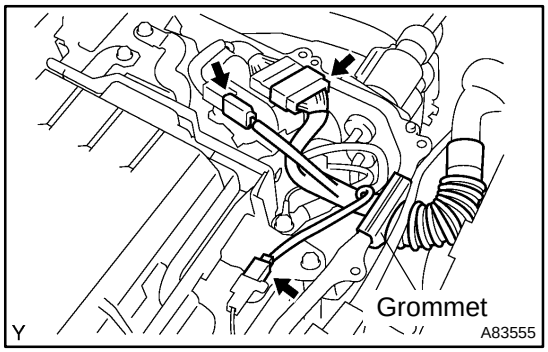

(f) Connect the 3 connectors shown in the illustration.

NOTICE:

Wear insulating gloves.

(g) Insert the grommet of the engine main wire harness into the U–shaped groove of the inverter case.

NOTICE:

Wear insulating gloves.

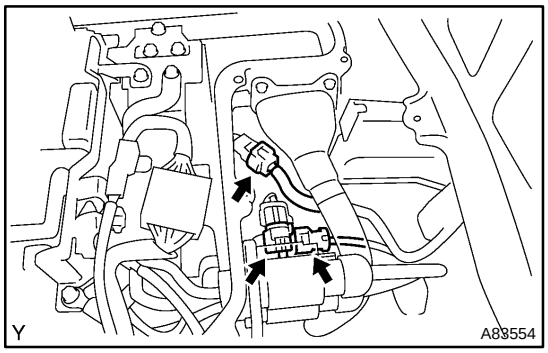

(h) Connect the 3 connectors shown in the illustration.

NOTICE:

Wear insulating gloves.

(i) Connect the connector for the air conditioner inverter, then lock the connector with the lock pin.

NOTICE:

Wear insulating gloves.

34. CONNECT FRAME WIRE

NOTICE:

Wear insulating gloves.

35. CONNECT CIRCUIT BREAKER SENSOR NO.1

NOTICE:

Wear insulating gloves.

36. CONNECT INVERTER COOLING HOSE NO.6

37. CONNECT INVERTER COOLING HOSE NO.1

38. CONNECT INVERTER COOLING HOSE NO.2

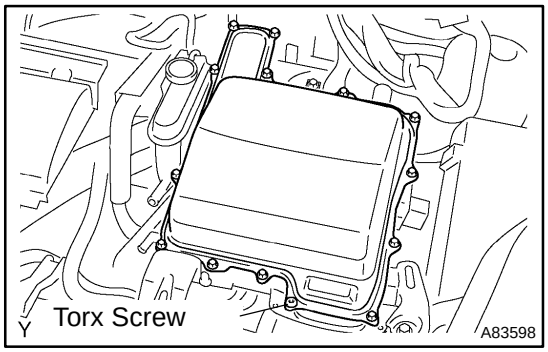

39. INSTALL INVERTER COVER

(a) Temporarily fasten the inverter cover with the 12 bolts and Torx screw.

(b) Tighten the 12 bolts.

Torque: 11 N·m (112 kgf·cm, 8.1 ft·lbf)

(c) Using a T30 Torx socket wrench, tighten the Torx screw.

Torque: 11 N·m (112 kgf·cm, 8.1 ft·lbf)

cardiagn.com

40. INSTALL RADIATOR SUPPORT OPENING COVER
41. INSTALL COWL TOP PANEL SUB–ASSY OUTER FRONT
42. INSTALL WINDSHIELD WIPER MOTOR & LINK ASSY
43. INSTALL COWL TOP VENTILATOR LOUVER RH
44. INSTALL COWL TOP VENTILATOR LOUVER LH
45. INSTALL HOOD TO COWL TOP SEAL
46. INSTALL FR WIPER ARM RH (See page 66–14)
47. INSTALL FR WIPER ARM LH (See page 66–14)
48. INSTALL FRONT WIPER ARM HEAD CAP
49. INSTALL SERVICE PLUG GRIP (See page 21–116)

NOTICE:
Wear insulating gloves.

50. CONNECT BATTERY NEGATIVE TERMINAL
Torque: 6.0 N·m (61 kgf·cm, 53 in.·lbf)
51. INSTALL REAR FLOOR BOARD NO.3
52. INSTALL DECK FLOOR BOX REAR
53. INSTALL REAR FLOOR BOARD NO.2
54. ADD HV COOLANT (See page 22–4)
55. CHECK FOR ENGINE COOLANT LEAKS (See page 16–2)
56. INSTALL ENGINE UNDER COVER RH
57. INSTALL ENGINE UNDER COVER LH
58. POWER WINDOW CONTROL SYSTEM INITIALIZE (See page 01–28)

cardiagn.com

HYBRID BATTERY SYSTEM

LOCATION

2103J–01

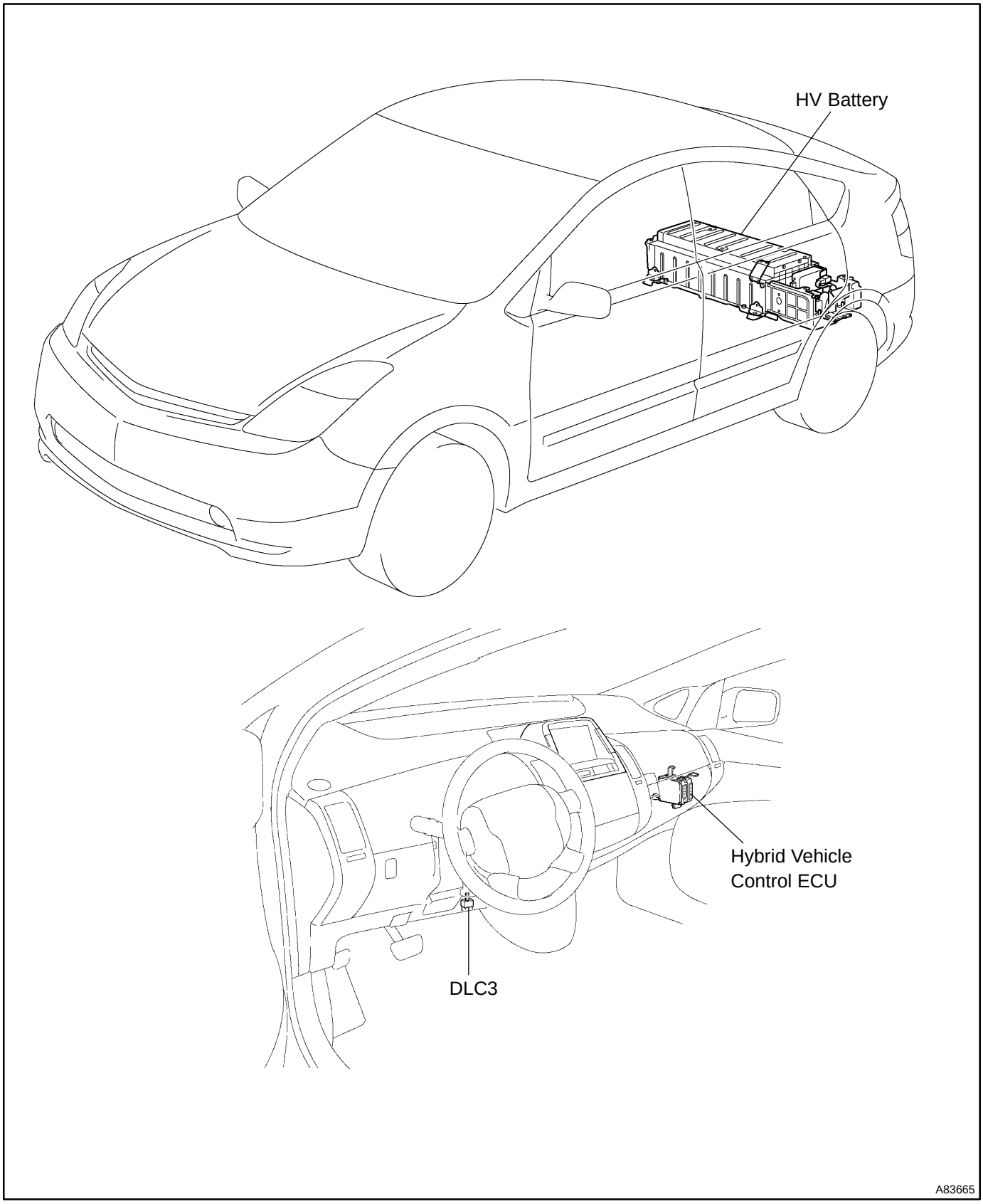

cardiagn.com

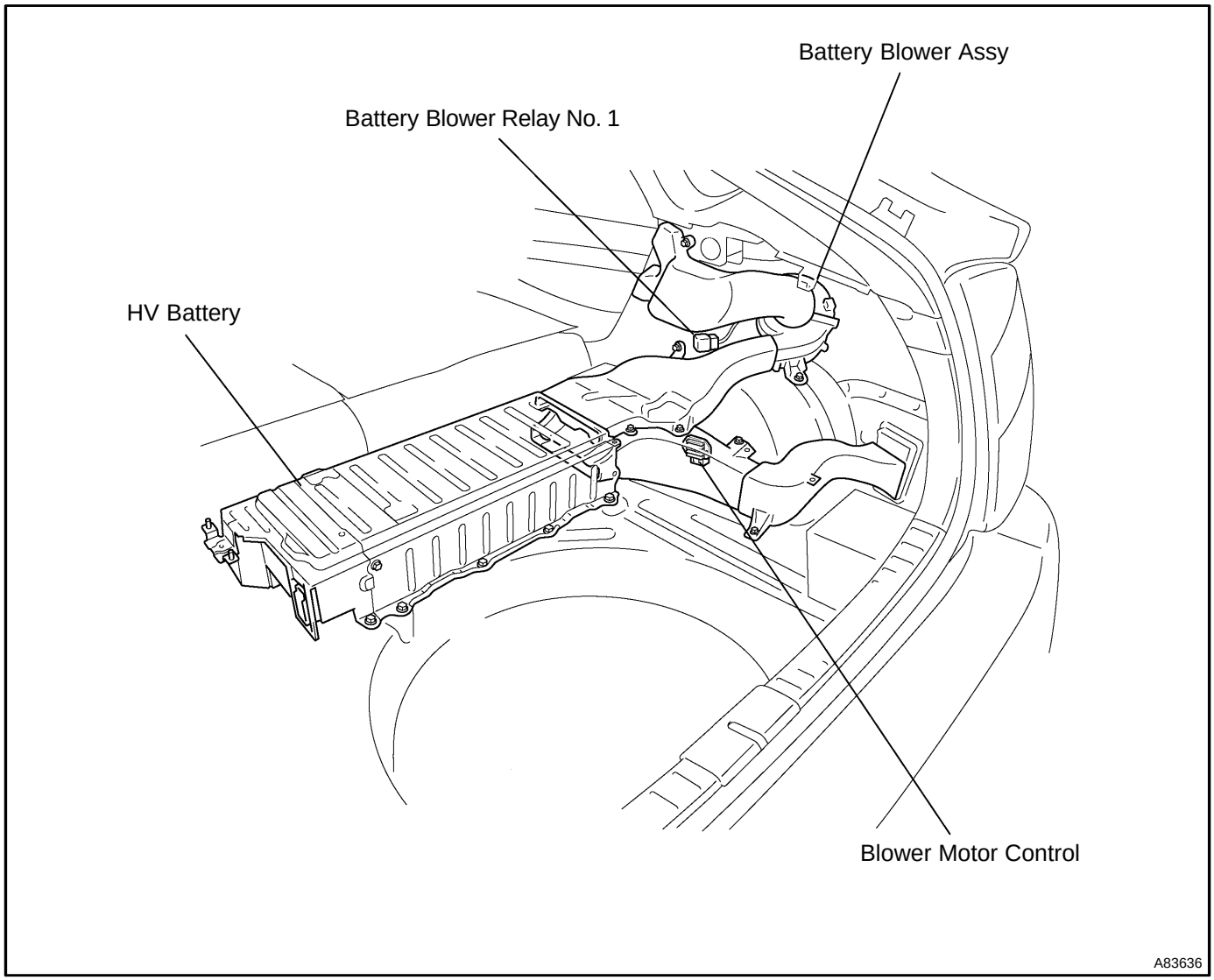

cardiagn.com

A83696

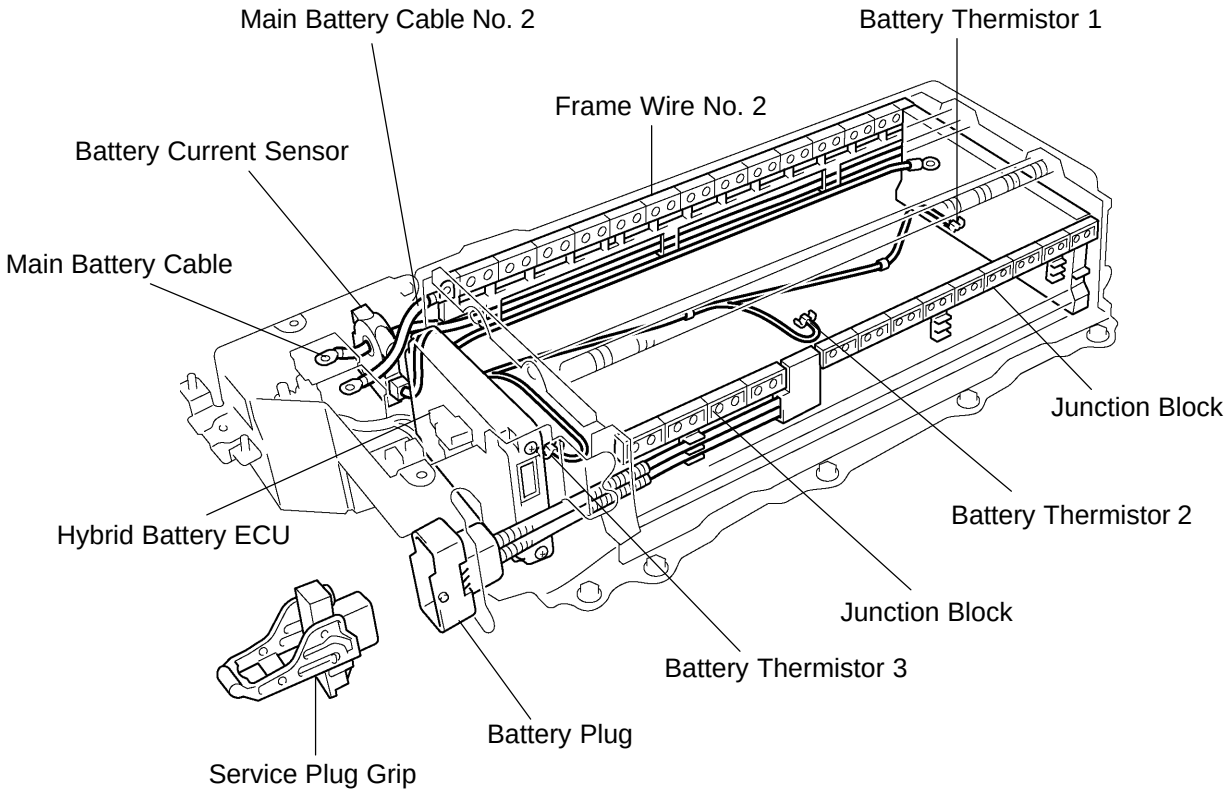

A83637

cardiagn.com

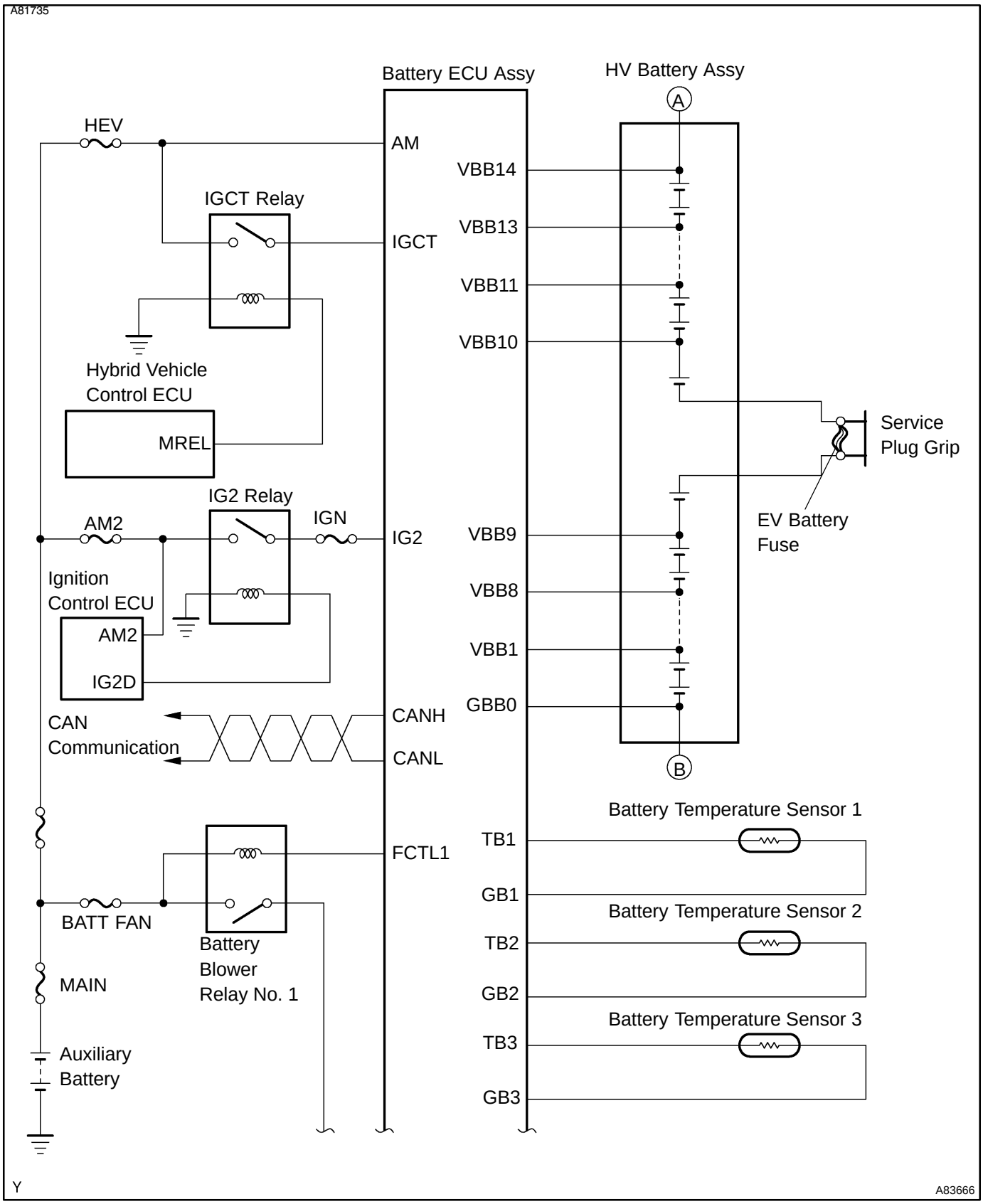

cardiagn.com

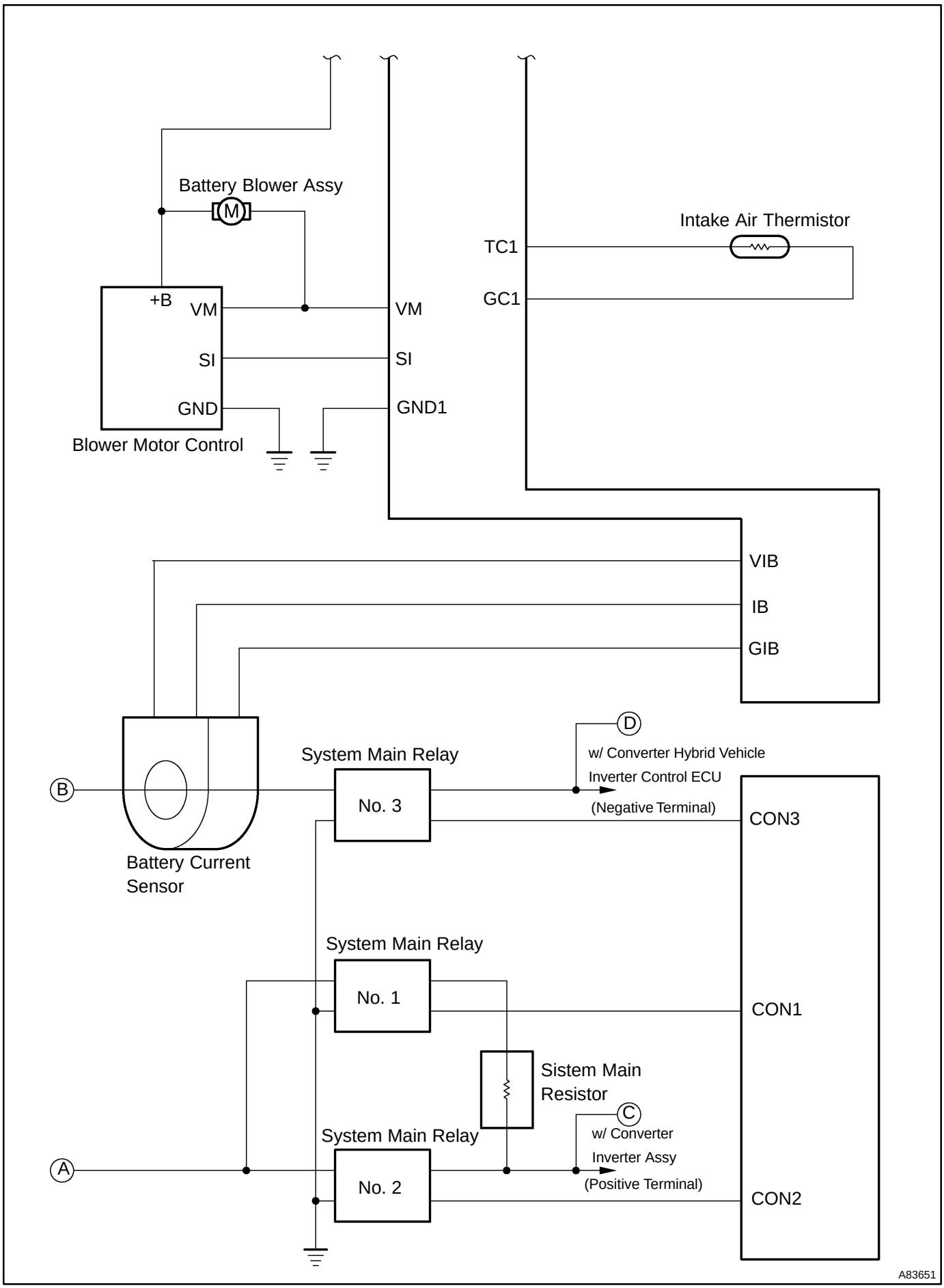

cardiagn.com

2103K–01

ON–VEHICLE INSPECTION

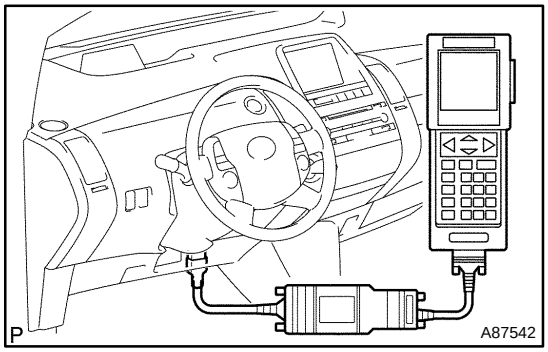

1. INSPECT BATTERY BLOWER ASSEMBLY

(a) Check the operation.

(1) Connect the hand held tester to the DLC3.

(2) Turn the power switch ON (IG).

(3) Select the item:
DIAGNOSIS / ENHACED OBD II / HV BATTERY / ACTIVE TEST / COOLING SPD / 1 to 6.

NOTICE:

If the check results are normal, do not perform the following check.

(b) Inspect the resistance.

(1) Remove the service plug grip.

(2) Disconnect the connector of the battery blower motor.

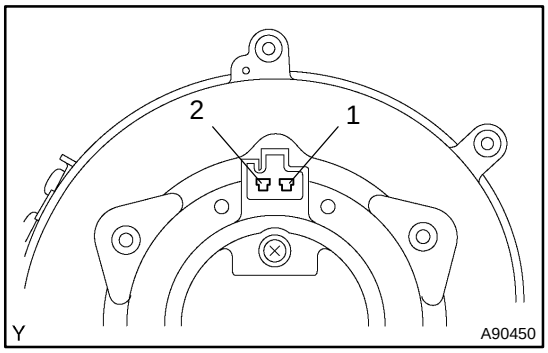

(3) Using an ohmmeter, measure the resistance between terminals 1 and 2 of the connector.

Standard: 9 Ω or less

If the standard is not met, replace the battery blower assembly.

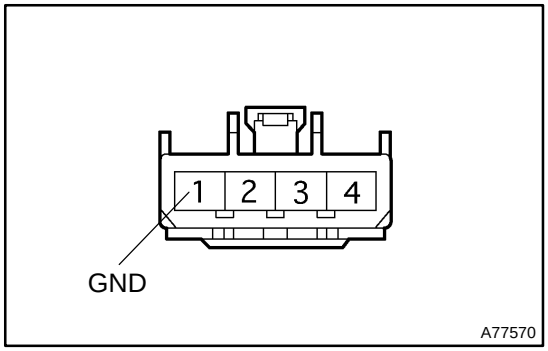

(c) Inspect the voltage.

(1) Connect the connector of the blower motor.

(2) Using ohmmeter, measure the resistance between terminal 1 (GND) of the blower motor control connector and body ground.

Standard: 1 Ω or less

(3) Connect the negative terminal of the auxiliary battery.

Torque: 6.0 N·m (61 kgf·cm, 53 in.·lbf)

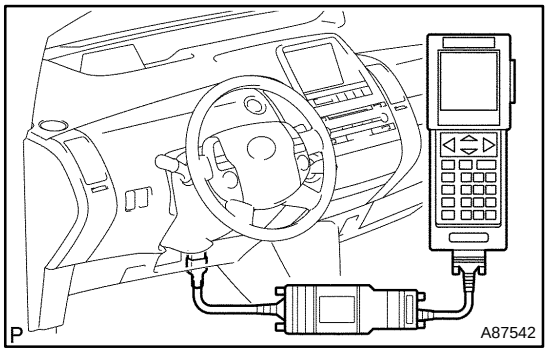

(4) Connect the hand held tester to the DLC3.

(5) Turn the power switch ON (IG).

(6) Select the item:
DIAGNOSIS / ENHACED OBD II / HV BATTERY / ACTIVE TEST / COOLING SPD / 1.

cardiagn.com

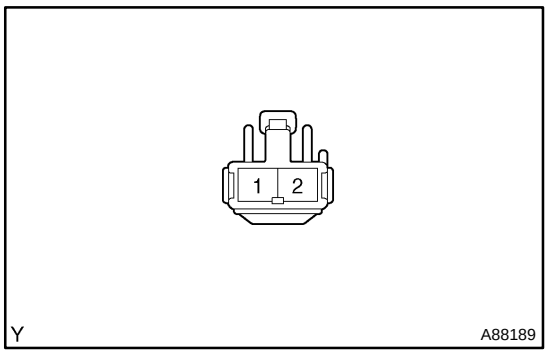

(7) Using a voltmeter, measure the voltage between terminals 1 (GND) of the blower motor connector and the body ground.

Standard: 9 to 14 V

NOTICE:

If the standard is not met (there is no voltage), there may be a defect in the power supply system relays or in the wire harness.

(8) Turn the power switch OFF, then disconnect the negative terminal of the auxiliary battery.

(9) Disconnect the battery blower motor, battery blower motor control, and connector of the battery ECU assembly.

(10) Using an ohmmeter, measure the resistance between the 2 terminals on the connectors of the battery blower motors on both sides of the vehicle, between the 4 terminals (VM) on the battery blower motor control, and between terminals B8 and 9 on the battery ECU assembly.

Standard: All the terminals 1 Ω or less

NOTICE:

If the standard is not met, repair or replace the wire harness and go back to step (a).

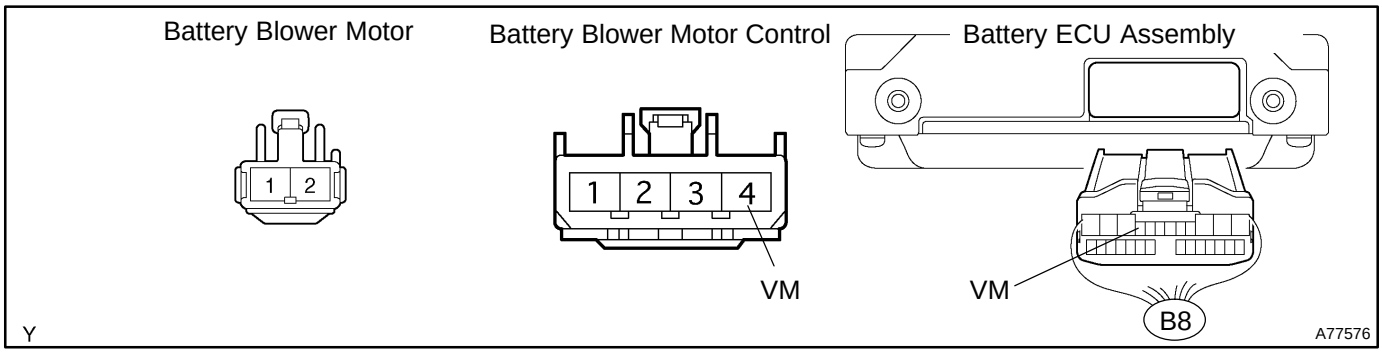

cardiagn.com

(11) Using an ohmmeter, measure the resistance between the terminal B8 – 10 (FCTL) on the connectors of the battery ECU assembly on both sides of the vehicle and terminal 1 on the holder installed on the battery blower relay No. 1.

Standard: 1 Ω or less

NOTICE:

If the standard is not met, repair or replace the wire harness and go back to step (a).

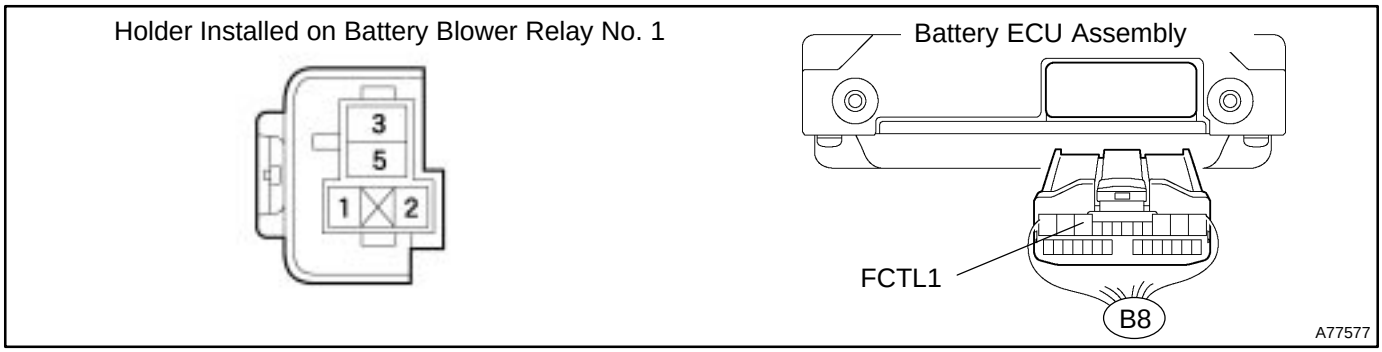

(12) Reconnect all the disconnected connectors.

NOTICE:

Do not connect the service plug grip.

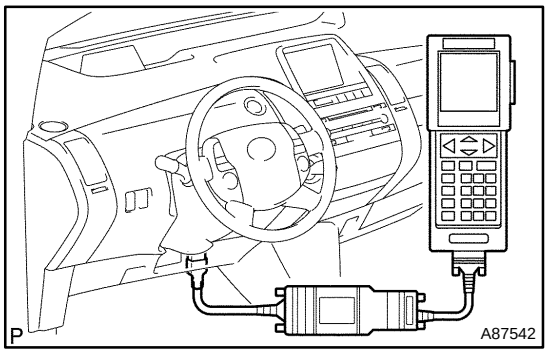

(13) Connect the hand held tester to the DLC3.

(14) Turn the power switch ON (IG).

(15) Select the item:
DIAGNOSIS / ENHACED OBD II / HV BATTERY / ACTIVE TEST / COOLING SPD / 1.

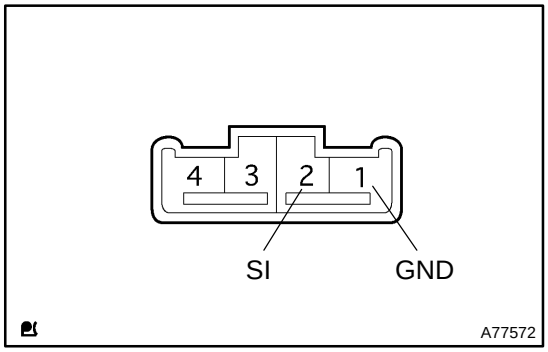

(16) Using a voltmeter, measure the voltage between terminals 1 (GND) and 2 (SI) of the battery blower motor control.

Standard: 1 V or more

NOTICE:

If the standard is not met, repair or replace the wire harness and go back to step (a).

cardiagn.com

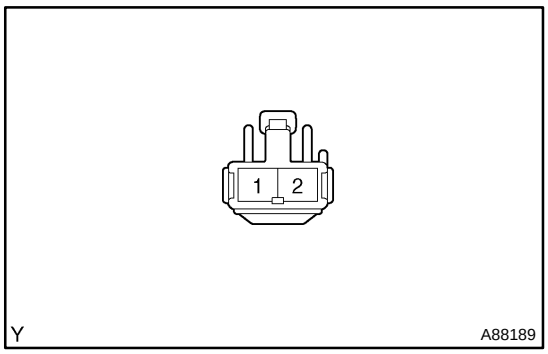

(17) Using a voltmeter, measure the voltage between the terminals on the blower motor connector.

Standard: 2 to 4 V

NOTICE:

If the standard is not met, repair or replace the wire harness and go back to step (a).

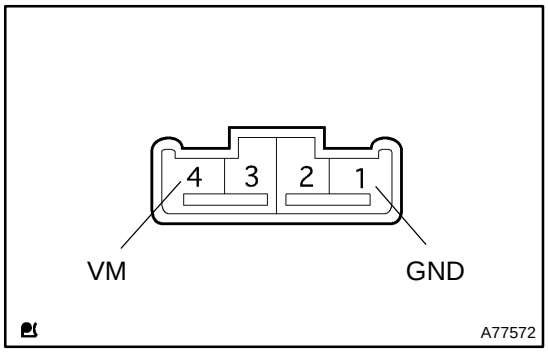

(18) Using a voltmeter, measure the voltage between terminals 1 (GND) and 4 (VM) of the blower motor control.

Standard:

A – 4 V to A – 2 V (A = (c) – (6))

NOTICE:

If the standard is not met, repair or replace the wire harness and go back to step (a).

(19) Return to step (a) and perform the inspection again to reconfirm.

cardiagn.com

2103L–01

INSPECTION

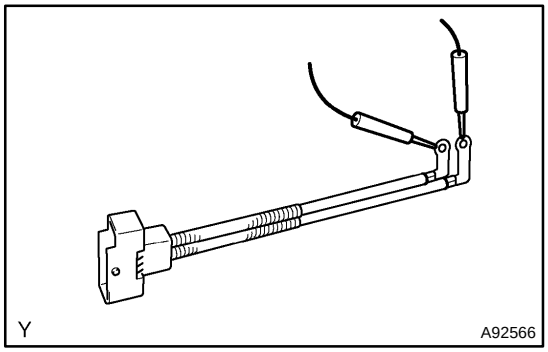

1. INSPECT BATTERY PLUG

(a) Check the continuity.

(1) Using an ohmmeter, check the continuity between the terminals.

Standard: 10 kΩ or higher

If the standard is not met, replace the battery plug.

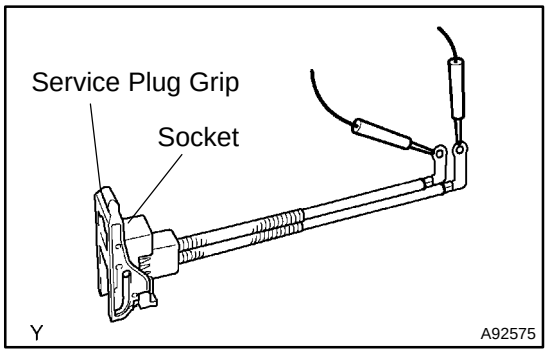

(2) Install the service plug grip to the socket.

(3) Using an ohmmeter, check the continuity between the terminals.

Standard: Below 1 Ω

If the standard is not met, replace the battery plug.

cardiagn.com

2. INSPECT SYSTEM MAIN RELAY NO.1

NOTICE:

Connectors B and C have the same shape. Identify each connector by the wire harness length (L) and the wire harness color on the terminal 1 side.

Connector	Wire Harness Length (L)	Wire Harness Color
B	Short	Yellow
C	Long	Black

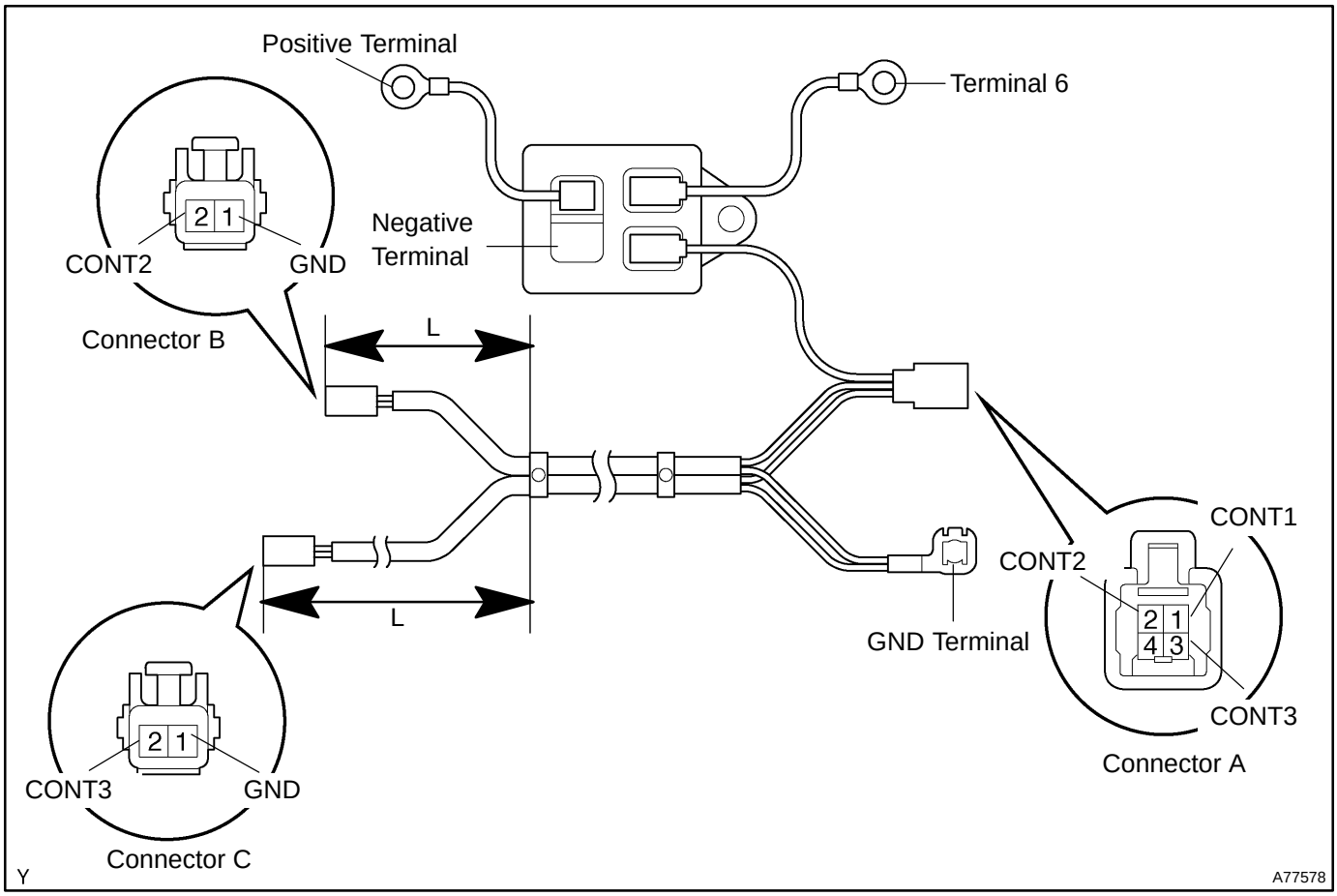

(a) Check the continuity.

(1) Using an ohmmeter, measure the resistance between the connectors.

Standard:

Tester Connection	Standard
Positive terminal – Negative terminal	10 kΩ or Higher
A2 (CONT2) – B1 (CONT2)	Below 1 Ω
A3 (CONT3) – C1 (CONT3)	Below 1 Ω
Terminal B1 (GND) – GND	Below 1 Ω
Terminal C2 (GND) – GND	Below 1 Ω

If the standards are not met, replace the system main relay No. 1.

cardiagn.com

(2) Using an ohmmeter, apply voltage between the positive and negative terminals, then measure the resistance between terminals 6 and A1 (CONT1).

Standard: Below 1 Ω

If the standard is not met, replace the system main relay No. 1.

(b) Inspect the resistance.

(1) Using an ohmmeter, measure the resistance between terminals 6 and A1 (CONT1).

Standard:70 to 160 Ω

If the standard is not met, replace the system main relay No. 1.

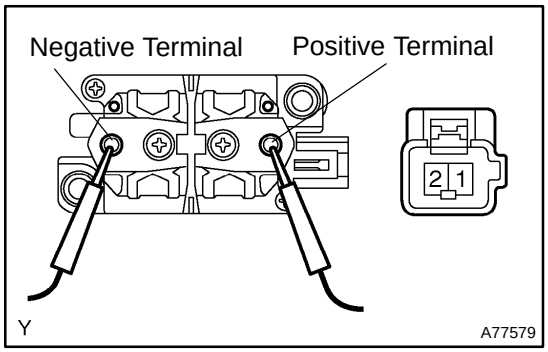

3. INSPECT SYSTEM MAIN RELAY NO.2

(a) Install the 2 installed nuts to the negative and positive terminals.

Torque: 5.6 N·m (57 kgf·cm, 50 in.·lbf)

(b) Check the continuity.

(1) Using an ohmmeter, measure the resistance between the positive and negative terminals.

Standard: 10 kΩ or higher

If the standard is not met, replace the system main relay No. 2.

(2) Using an ohmmeter, apply battery voltage between the connector terminals, then measure the resistance between the positive and negative terminals.

Standard: Below 1 Ω

If the standard is not met, replace the system main relay No. 2.

(c) Inspect the resistance.

(1) Using an ohmmeter, measure the resistance between the connector terminals.

Standard: 20 to 50 Ω

If the standard is not met, replace the system main relay No. 2.

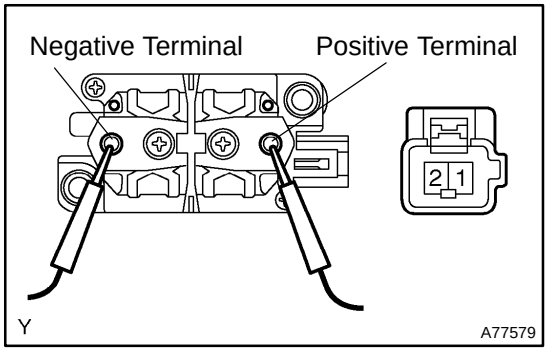

4. INSPECT SYSTEM MAIN RELAY NO.3

(a) Install the 2 installed nuts to the negative and positive terminals.

Torque: 5.6 N·m (57 kgf·cm, 50 in.·lbf)

(b) Check the continuity.

(1) Using an ohmmeter, measure the resistance between the positive and negative terminals.

Standard: 10 kΩ or higher

If the standard is not met, replace the system main relay No. 3.

(2) Using an ohmmeter, apply battery voltage between the connector terminals, then measure the resistance between the positive and negative terminals.

Standard: Below 1 Ω

If the standard is not met, replace the system main relay No. 3.

(c) Inspect the resistance.

(1) Using an ohmmeter, measure the resistance between the connector terminals.

Standard: 20 to 50 Ω

If the standard is not met, replace the system main relay No. 3.

cardiagn.com

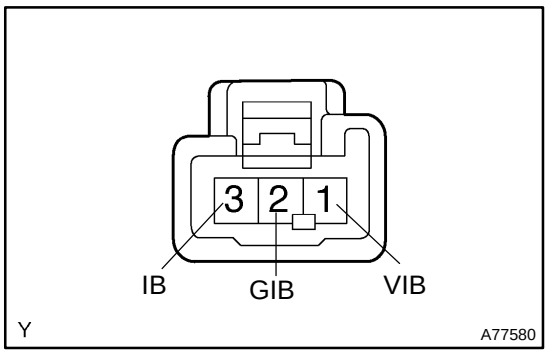

5. INSPECT BATTERY CURRENT SENSOR

(a) Inspect the resistance.

(1) Using an ohmmeter, measure the resistance between terminals 1 (VIB) and 2 (GIB).

Standard:

Tester Connection	Resistance
Positive probe to terminal 1 (VIB) Negative probe to terminal 2 (GIB)	3.5 to 4.5 kΩ
Positive probe to terminal 2 (GIB) Negative probe to terminal 1 (VIB)	5 to 7 kΩ

If the standards are not met, replace the battery current sensor.

(2) Using an ohmmeter, measure the resistance between terminals 1 (VIB) and 3 (IB).

Standard:

Tester Connection	Resistance
Positive probe to terminal 1 (VIB) Negative probe to terminal 3 (IB)	3.5 to 4.5 kΩ
Positive probe to terminal 3 (IB) Negative probe to terminal 1 (VIB)	5 to 7 kΩ

If the standards are not met, replace the battery current sensor.

(3) Using an ohmmeter, measure the resistance between terminals 2 (GIB) and 3 (IB).

Standard: 0.2 kΩ or less

NOTICE:

Even if the probes are changed around, the resistance will not vary.

If the standard is not met, replace the battery current sensor.

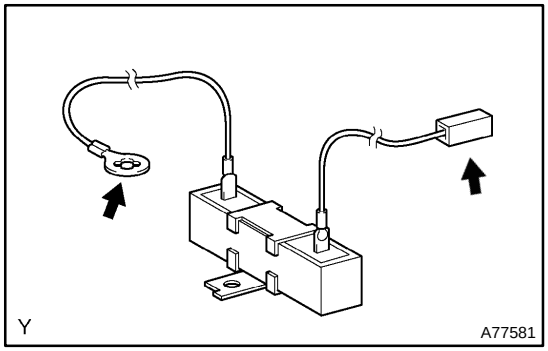

6. INSPECT SYSTEM MAIN RESISTOR

(a) Inspect the resistance.

(1) Using an ohmmeter, measure the resistance between the terminals.

Standard: 18 to 22 Ω

If the standard is not met, replace the system main resistor.

cardiagn.com

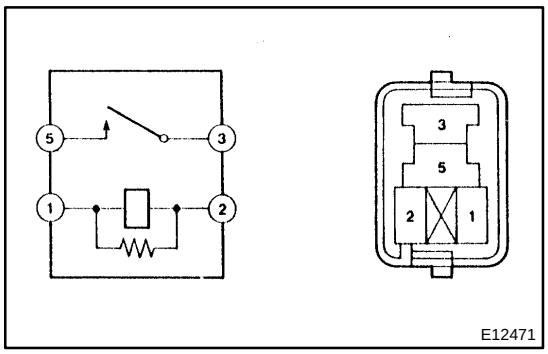

7. INSPECT BATTERY BLOWER RELAY NO.1

(a) Inspect the resistance.

(1) Using an ohmmeter, measure the resistance between the terminals.

Standard

Tester Connection	Specified Condition
3 – 5	10 kΩ or Higher
3 – 5	Below 1 Ω (When battery voltage is applied to terminals 1 and 2)

If the standards are not met, replace the battery blower relay No. 1.

cardiagn.com

HV BATTERY

COMPONENTS

2103M–01

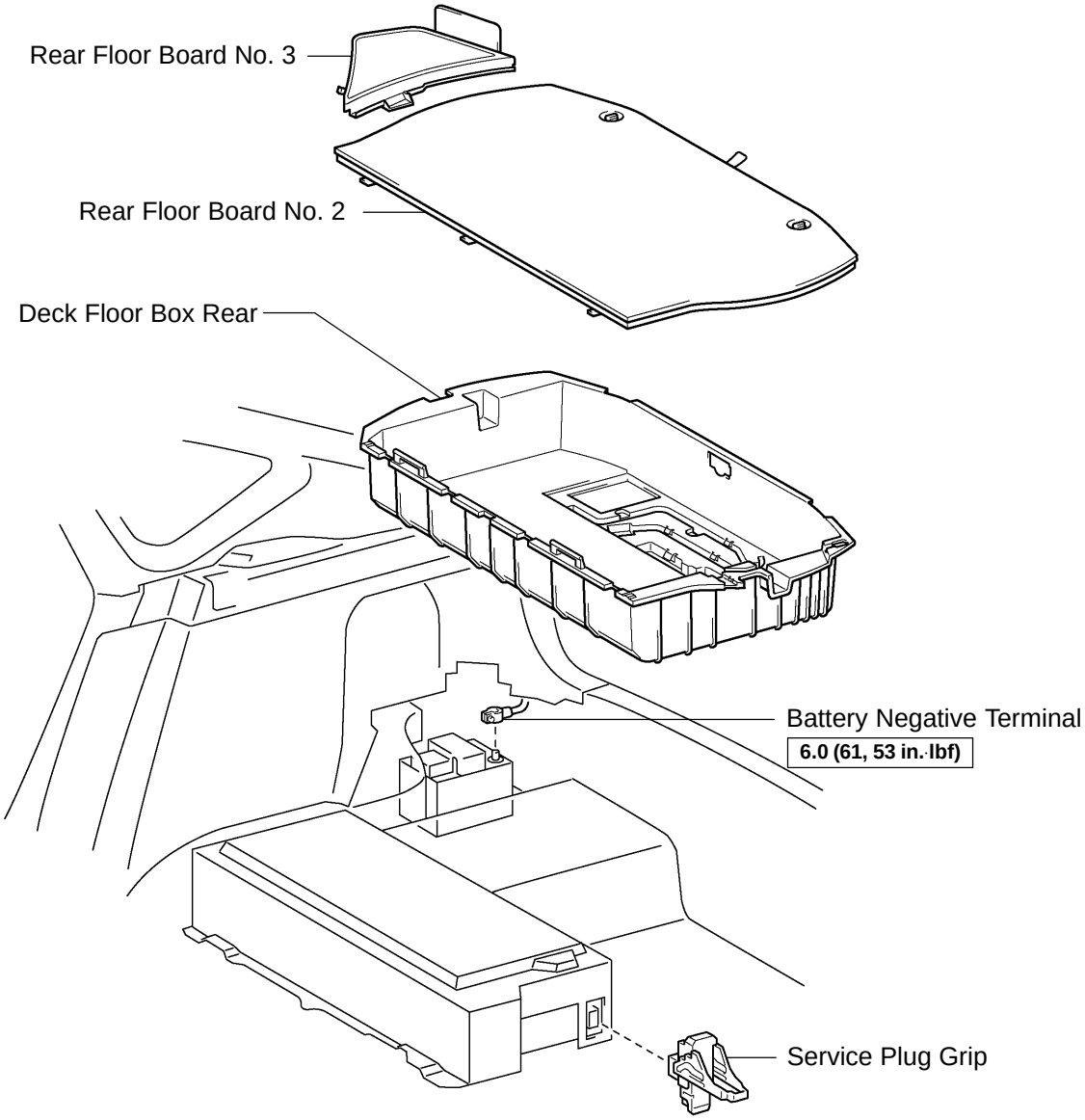

o N·m (kgf·cm, ft·lbf): Specified torque

A83616

cardiagn.com

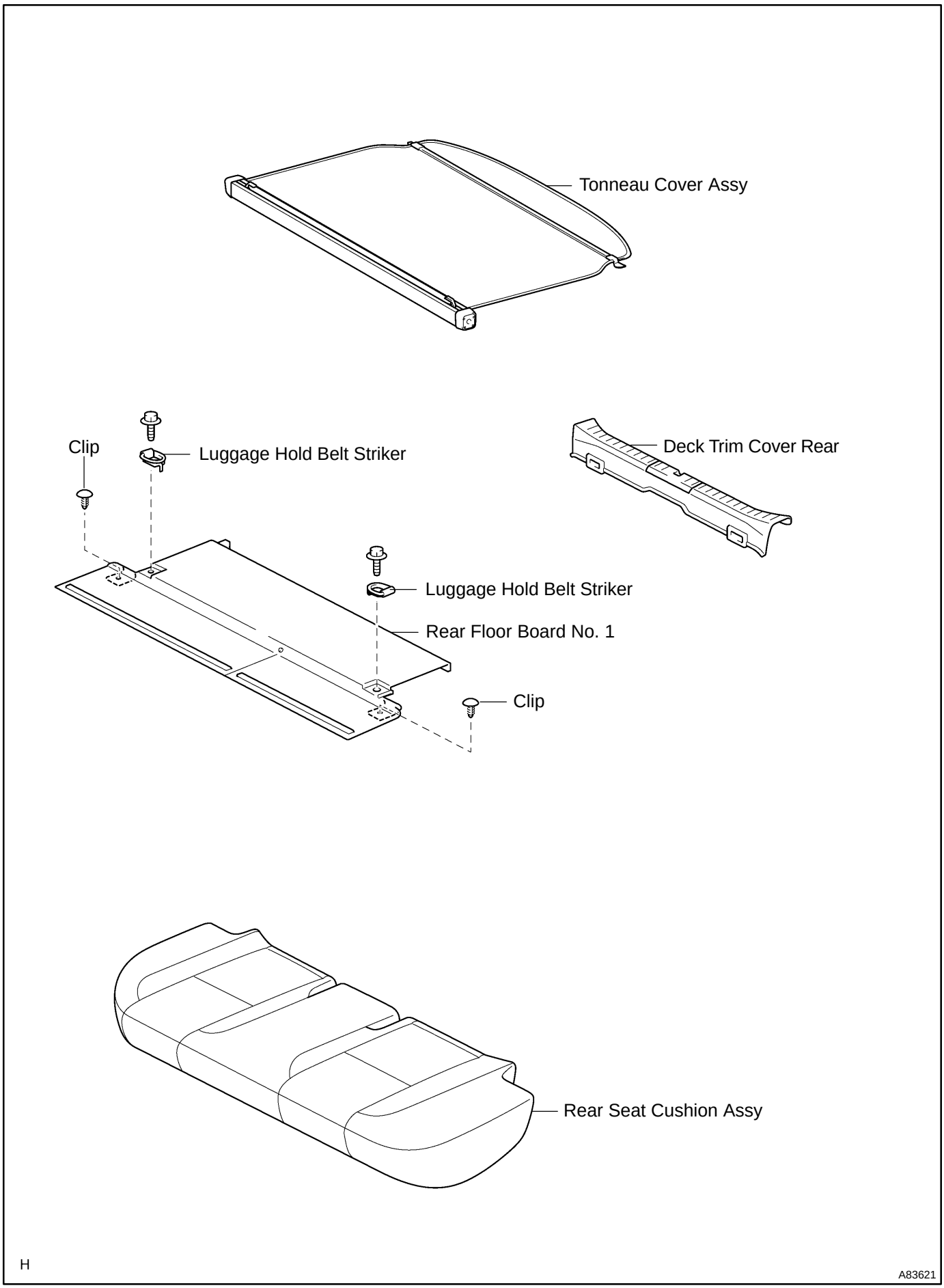

cardiagn.com

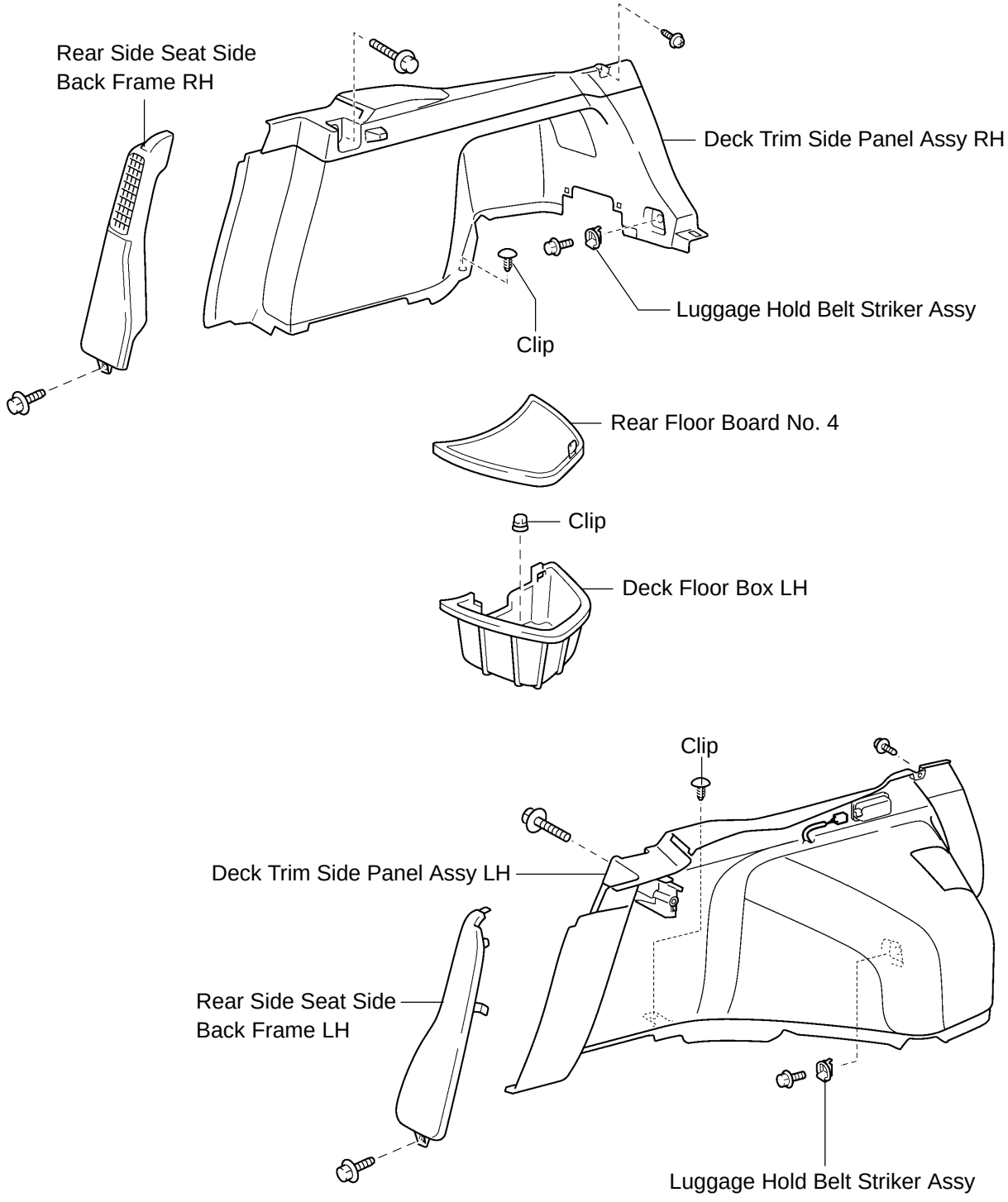

H

A83620

cardiagn.com

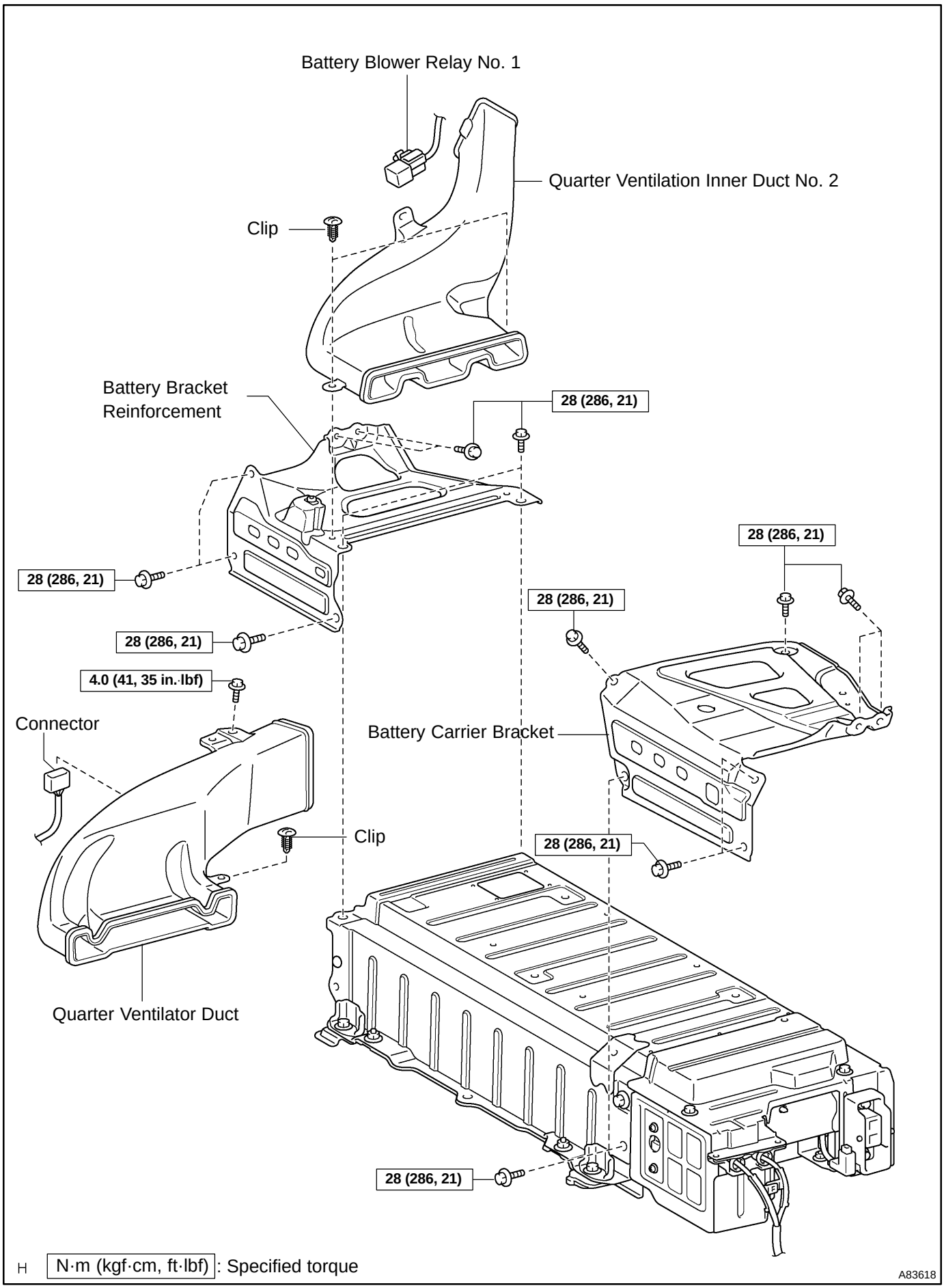

cardiagn.com

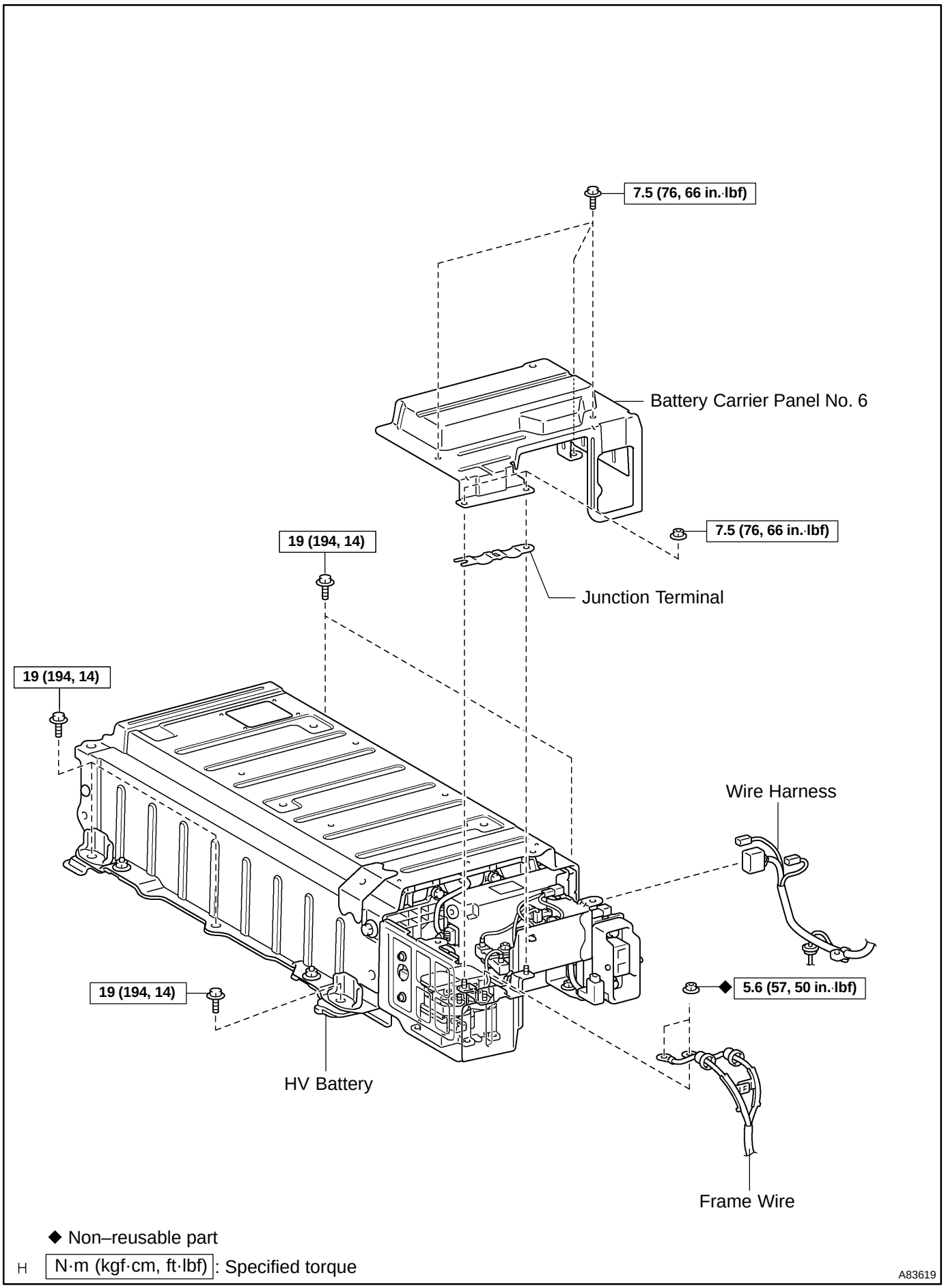

cardiagn.com

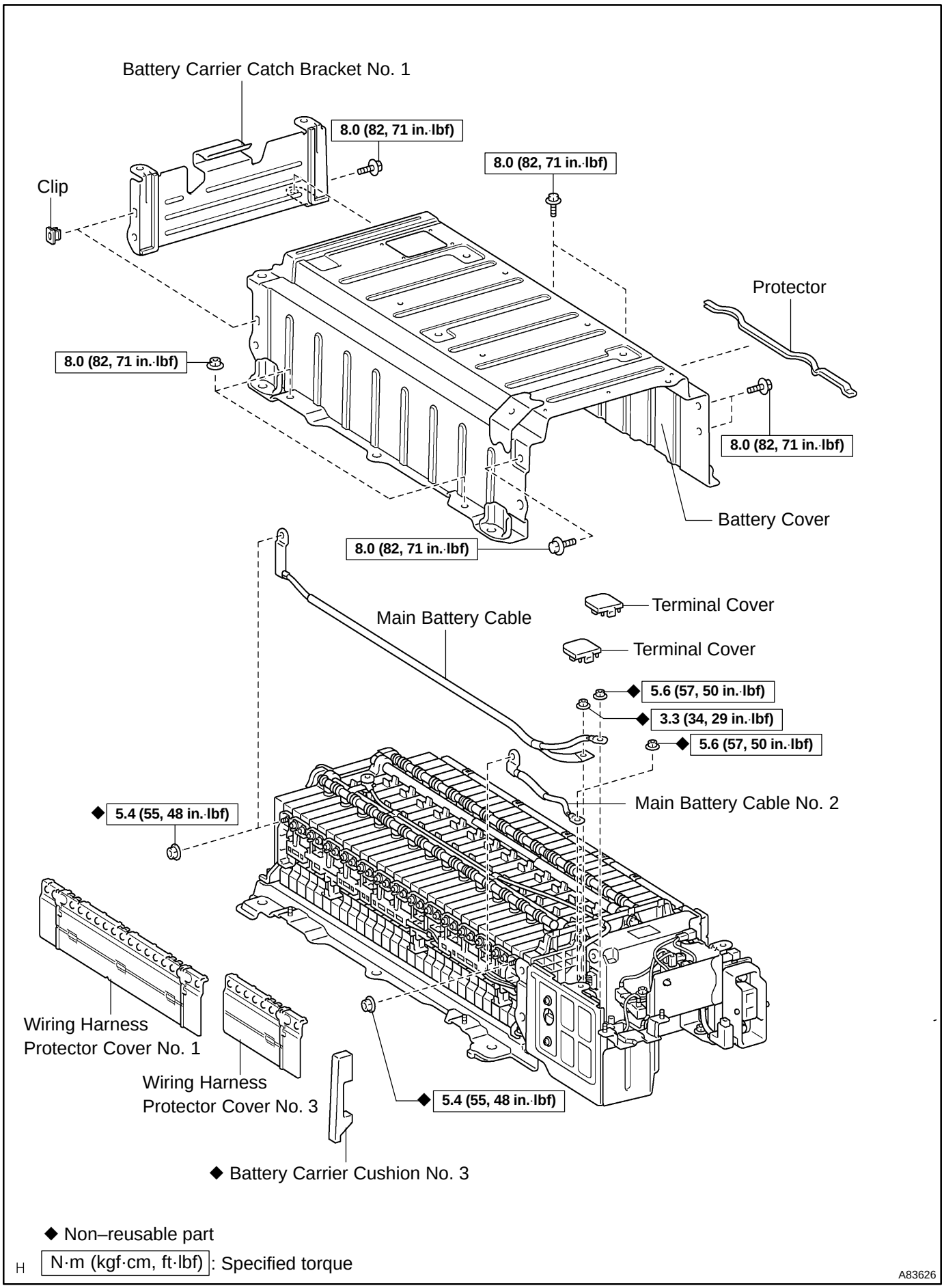

cardiagn.com

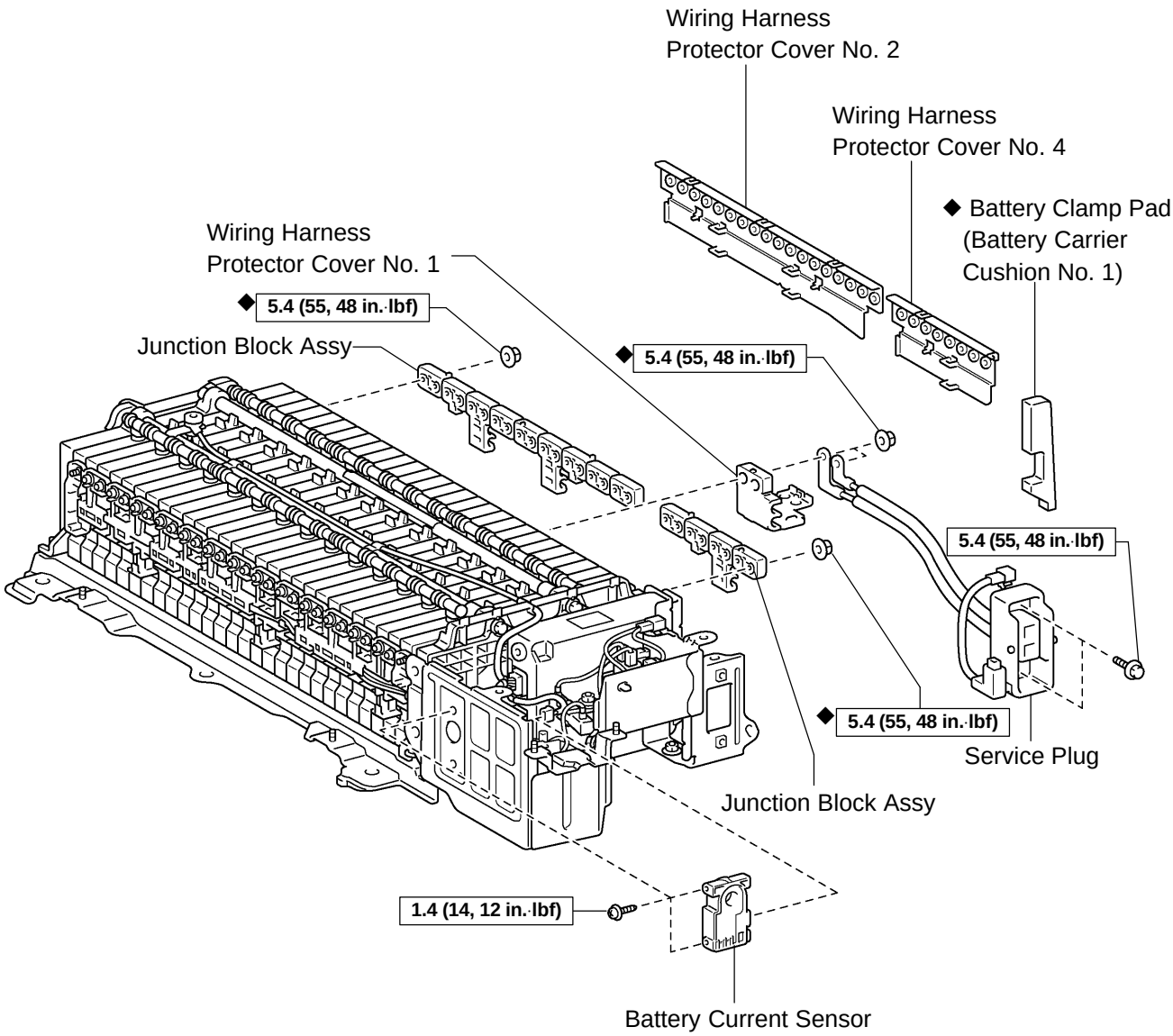

◆ Non–reusable part

H N·m (kgf·cm, ft·lbf): Specified torque

A83627

cardiagn.com

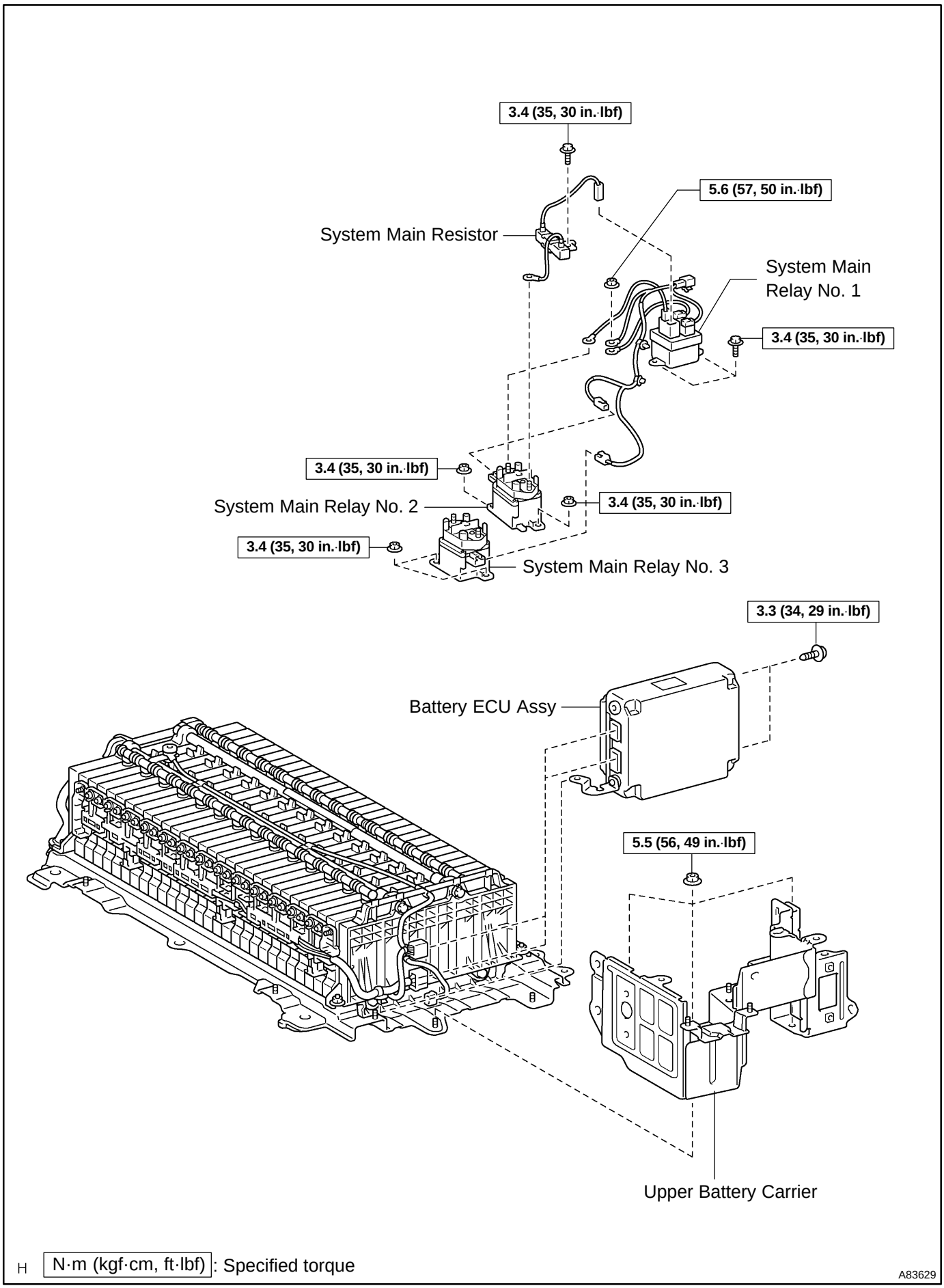

cardiagn.com

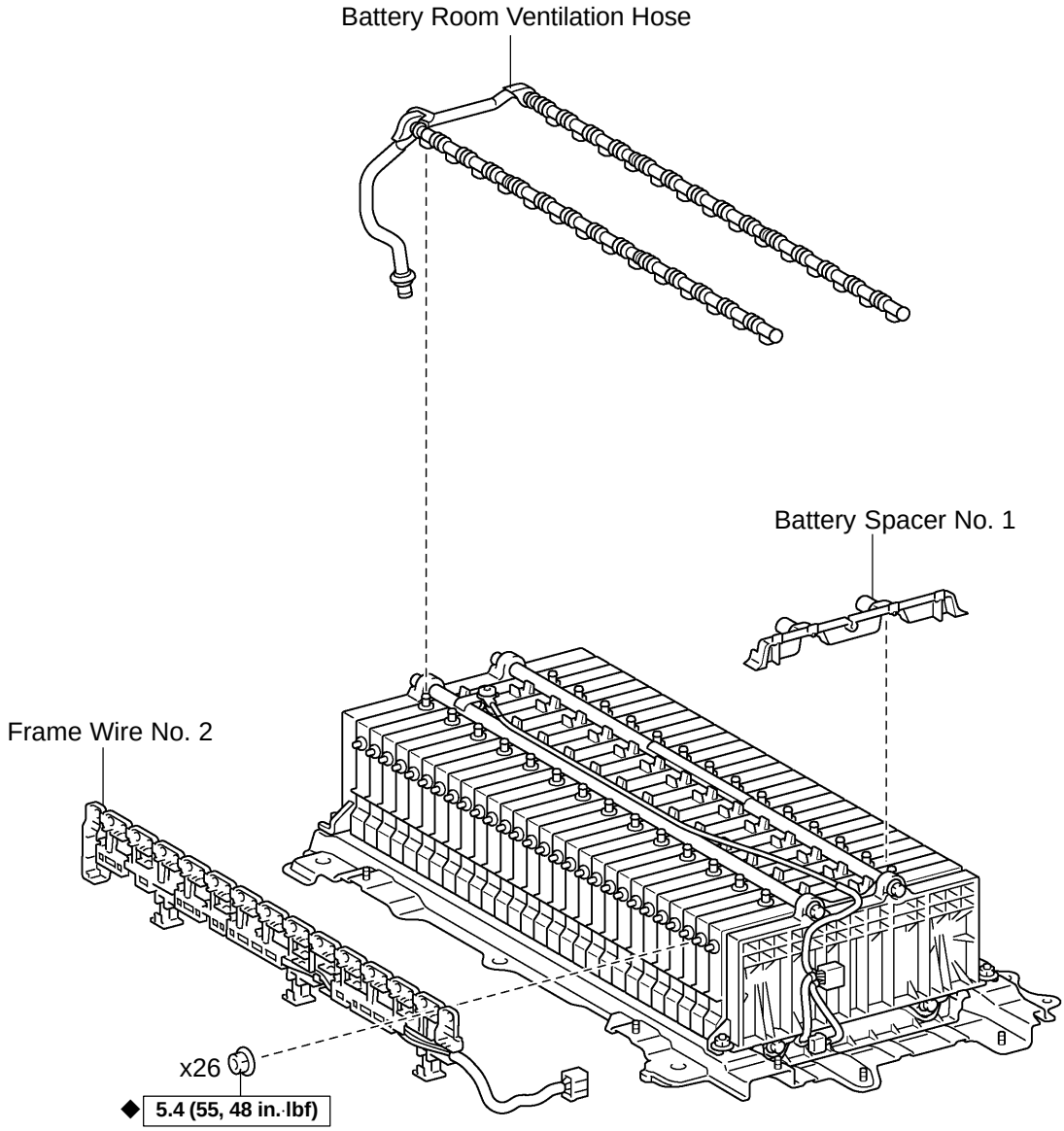

H N·m (kgf·cm, ft·lbf): Specified torque

A83628

cardiagn.com

2103N–01

Removal & Installation and Disassembly & Reassembly

NOTICE:

- **When working on the high voltage systems, always wear insulating gloves.**
- **After removing the service plug grip, do not operate the power switch as it may damage the hybrid vehicle control ECU.**
- **Keep the removed service plug in your pocket to prevent other technicians from reconnecting it while you are servicing the vehicle.**
- **After removing the service plug grip, do not touch the high voltage connectors and terminals for 5 minutes.**

1. **PRECAUTION (See page 21–7)**
2. **REMOVE REAR FLOOR BOARD NO.2 (See page 21–116)**
3. **REMOVE DECK FLOOR BOX REAR (See page 21–116)**
4. **REMOVE REAR FLOOR BOARD NO.3 (See page 21–116)**
5. **DISCONNECT BATTERY NEGATIVE TERMINAL (See page 21–116)**
6. **REMOVE SERVICE PLUG GRIP (See page 21–116)**

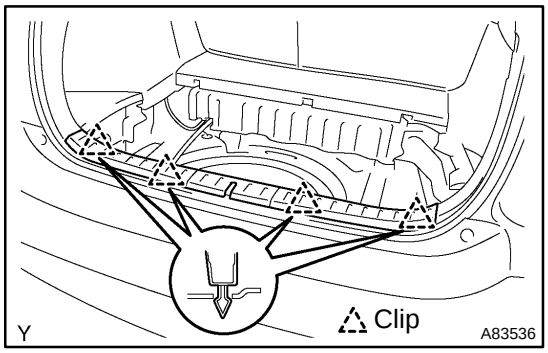

7. REMOVE DECK TRIM COVER REAR

(a) Disconnect the 4 clips shown in the illustration, then remove the deck trim cover rear.

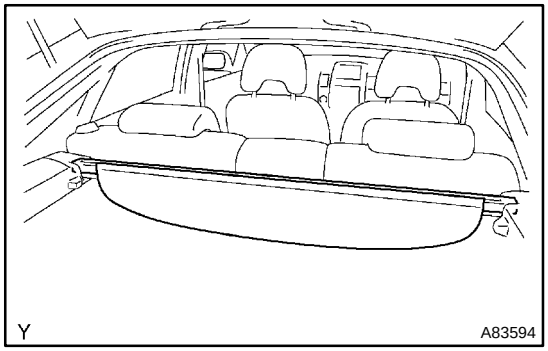

8. REMOVE TONNEAU COVER ASSY

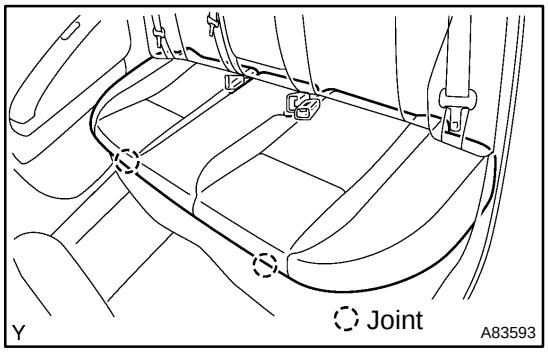

9. REMOVE REAR SEAT CUSHION ASSY

(a) Undo the 2 joints shown in the illustration, then remove the rear seat cushion.

cardiagn.com

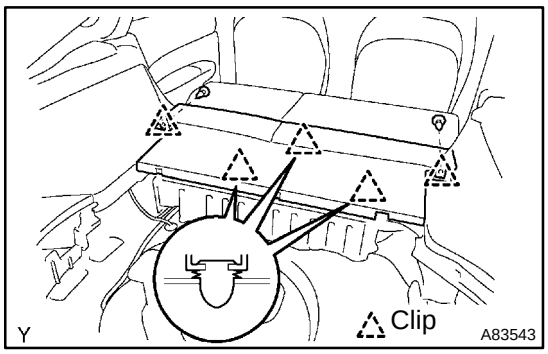

10. REMOVE REAR FLOOR BOARD NO.1

(a) Remove the 2 bolts and luggage hold belt strikers.

(b) Remove the 5 clips shown in the illustration and the rear floor board No. 1.

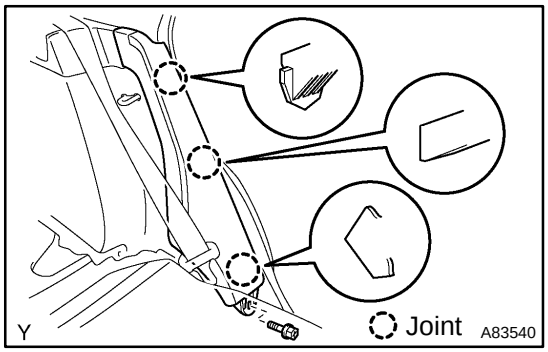

11. REMOVE REAR SIDE SEAT BACK FRAME LH

(a) Remove the bolt from the rear side seat back frame LH.

(b) Undo the 3 joints, then remove the rear side seat back frame LH.

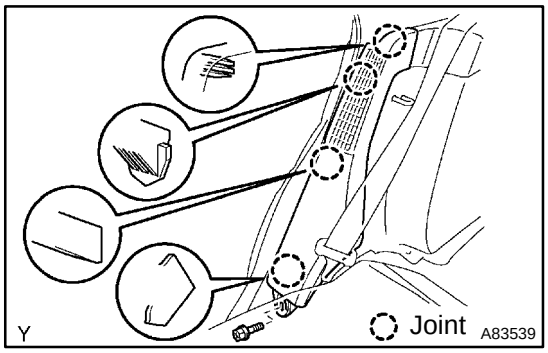

12. REMOVE REAR SIDE SEAT BACK FRAME RH

(a) Remove the bolt from the rear side seat back frame RH.

(b) Undo the 4 joints, then remove the rear side seat back frame RH.

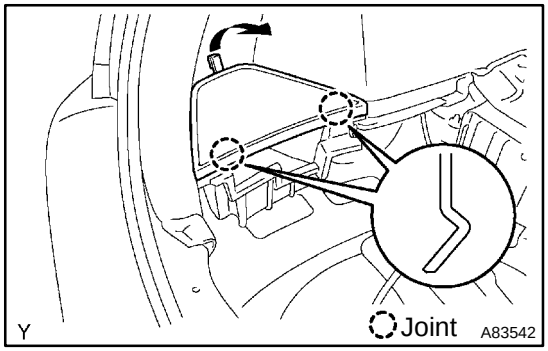

13. REMOVE REAR FLOOR BOARD NO.4

(a) As shown in the illustration, while lifting up the rear floor board No. 4, undo the 2 joints and remove the rear floor board No. 4.

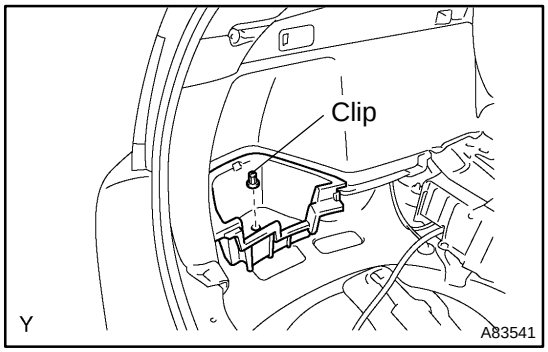

14. REMOVE DECK FLOOR BOX LH

(a) Remove the clip and deck floor box LH.

15. REMOVE DECK TRIM SIDE PANEL ASSY LH

(a) Remove the bolt and luggage hold belt striker assembly.

cardiagn.com

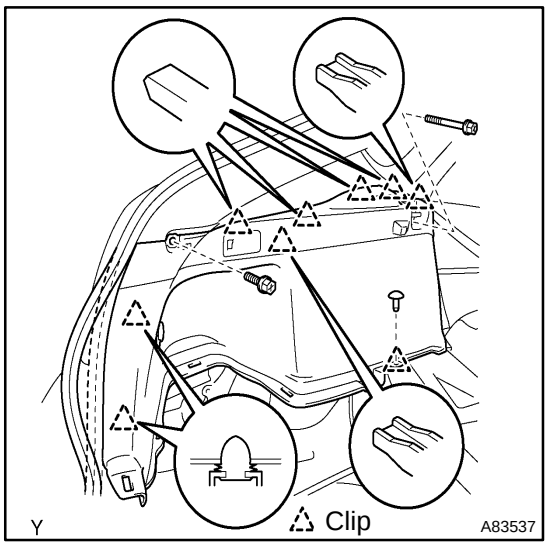

(b) Remove the 2 bolts from the deck trim side panel assembly LH.
(c) Remove the clip from the deck trim side panel assembly LH.
(d) Undo the 8 clips, then pull out a part of the weather strip and remove the deck trim side panel assembly LH.
(e) Disconnect the lighting connector.

16. REMOVE DECK TRIM SIDE PANEL ASSY RH

(a) Remove the bolt and luggage hold belt striker assembly.

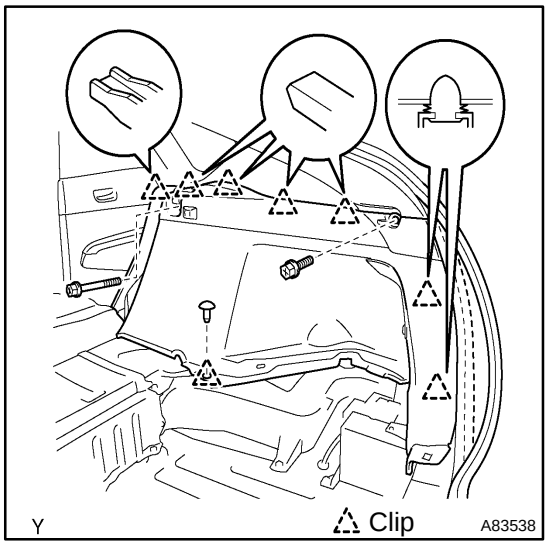

(b) Remove the 2 bolts from the deck trim side panel assembly RH.
(c) Remove the clip from the deck trim side panel assembly RH.
(d) Undo the 7 clips, then pull out a part of the weather strip and remove the deck trim side panel assembly RH.

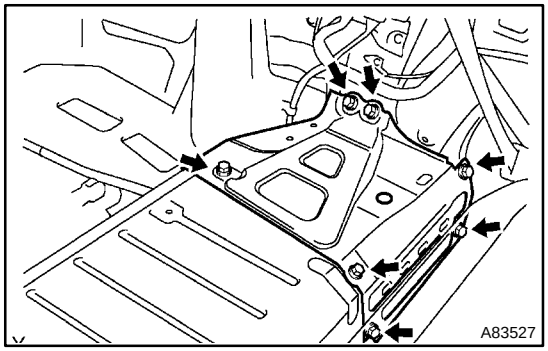

17. REMOVE BATTERY CARRIER BRACKET

(a) Remove the 7 bolts and battery carrier bracket.

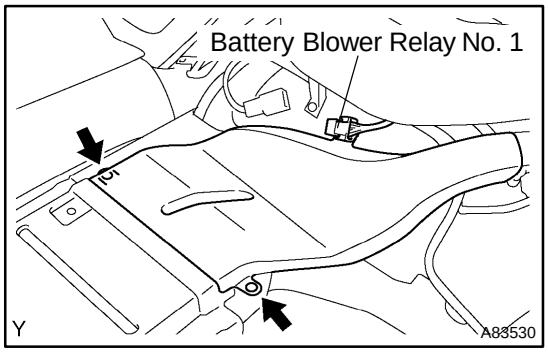

18. REMOVE QUARTER VENT DUCT INNER NO.2

(a) Disconnect the clamp and battery blower relay No. 1.
(b) Remove the 2 clips.
(c) Slide the ventilation inner duct No. 2 to the battery side, then remove it.

cardiagn.com

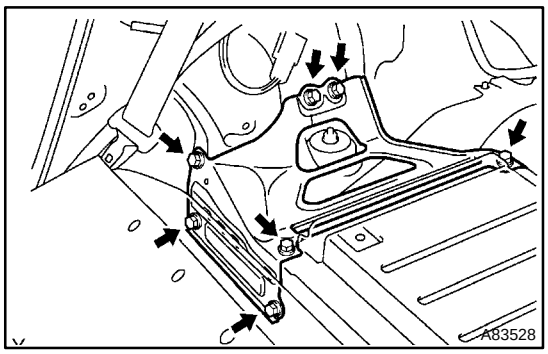

19. REMOVE BATTERY BRACKET REINFORCEMENT

(a) Remove the 7 bolts and battery bracket reinforcement.

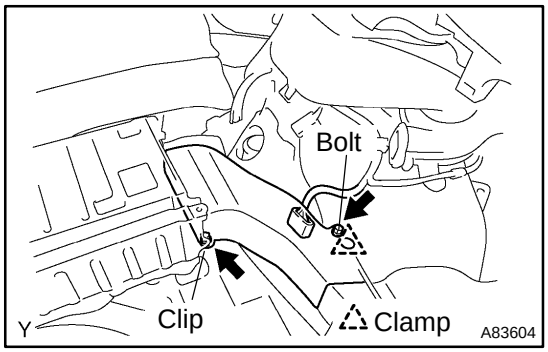

20. REMOVE QUARTER VENT DUCT

(a) Disconnect the connector.

(b) Remove the clamp, then disconnect the wire harness.

(c) Remove the bolt, clip and quarter ventilator duct.

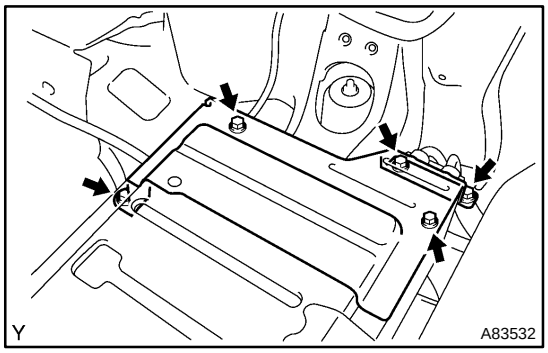

21. REMOVE BATTERY CARRIER PANEL NO.6

(a) Remove the 3 bolts, 2 nuts and battery carrier panel No. 6.

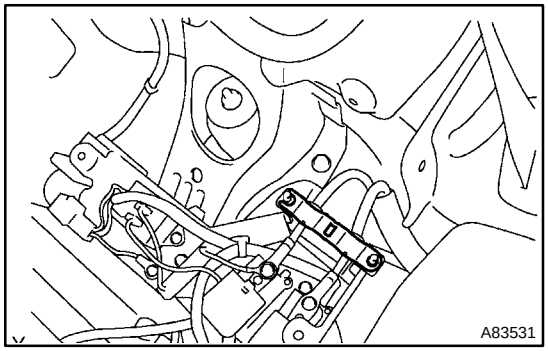

22. REMOVE JUNCTION TERMINAL

NOTICE:

Wear insulating gloves.

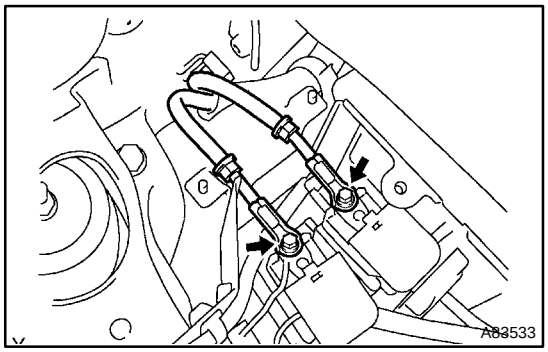

23. REMOVE FRAME WIRE

NOTICE:

- **Wear insulating gloves.**
- **Insulate the removed terminals with insulating tape.**

(a) Remove the 2 nuts, then disconnect the frame wire from the system main relay No. 2 and No. 3.

cardiagn.com

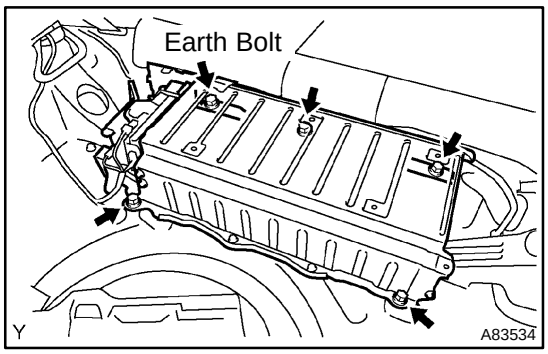

24. REMOVE HV BATTERY ASSY

(a) Remove the earth bolt and 4 bolts shown in the illustration.

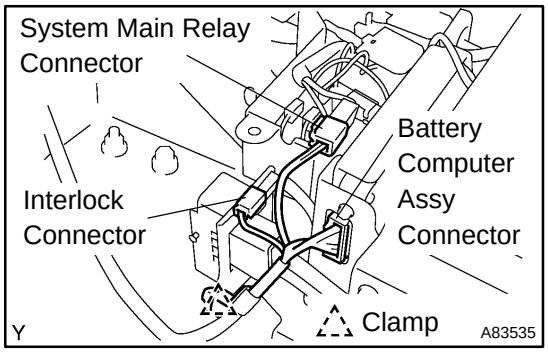

(b) Disconnect the system main relay connector.

NOTICE:

Wear insulating gloves.

(c) Disconnect the interlock connector.

NOTICE:

Wear insulating gloves.

(d) Remove the clamp, then disconnect the battery ECU connector.

NOTICE:

Wear insulating gloves.

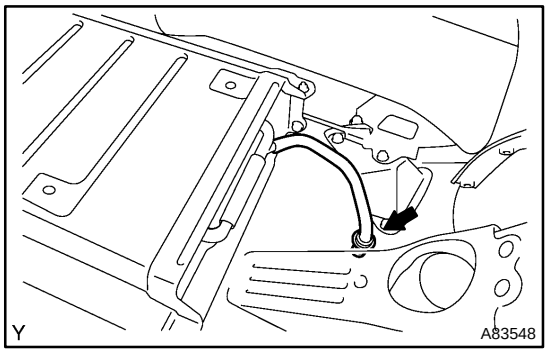

(e) Disconnect the battery room ventilation hose from the floor panel.

NOTICE:

Wear protective glasses.

(f) Remove the HV battery.

NOTICE:

Wear insulating gloves.

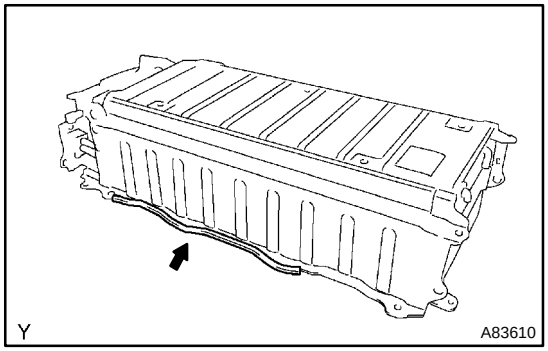

25. REMOVE BATTERY COVER SUB–ASSY

(a) Remove the protector shown in the illustration.

cardiagn.com

(b) Remove the 6 bolts, 2 nuts, clip, battery cover and battery carrier catch bracket No. 1.

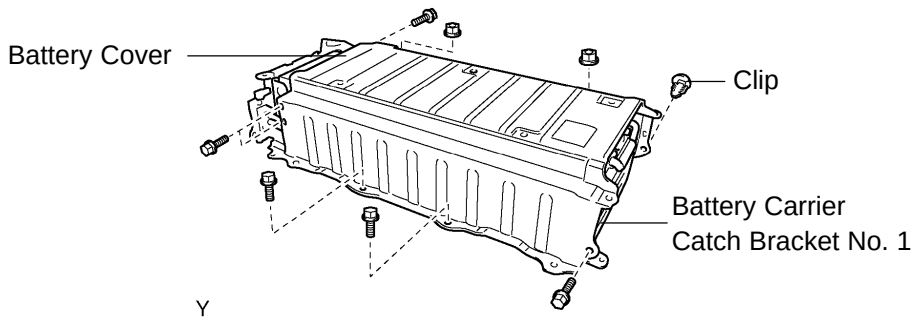

26. REMOVE WIRING HARNESS PROTECTOR COVER NO.1 (See page 21–66)
NOTICE:
Wear insulating gloves.
27. REMOVE WIRING HARNESS PROTECTOR COVER NO.3 (See page 21–66)
NOTICE:
Wear insulating gloves.
28. REMOVE BATTERY CARRIER CUSHION NO.3 (See page 21–66)
NOTICE:
Wear insulating gloves.
29. REMOVE MAIN BATTERY CABLE (See page 21–66)
NOTICE:
Wear insulating gloves.
30. REMOVE MAIN BATTERY CABLE NO.2 (See page 21–66)
NOTICE:
Wear insulating gloves.
31. REMOVE BATTERY CURRENT SENSOR (See page 21–95)
NOTICE:
Wear insulating gloves.
32. REMOVE WIRING HARNESS PROTECTOR COVER NO.2 (See page 21–80)
NOTICE:
Wear insulating gloves.
33. REMOVE WIRING HARNESS PROTECTOR COVER NO.4 (See page 21–80)
NOTICE:
Wear insulating gloves.
34. REMOVE BATTERY CLAMP PAD (See page 21–77)
NOTICE:
Wear insulating gloves.
35. REMOVE WIRING HARNESS PROTECTOR COVER NO.1 (See page 21–77)
NOTICE:
Wear insulating gloves.
36. REMOVE BATTERY PLUG (See page 21–77)
NOTICE:
Wear insulating gloves.

cardiagn.com

37. REMOVE JUNCTION BLOCK ASSY (See page 21–80)
NOTICE:
Wear insulating gloves.
38. REMOVE SYSTEM MAIN RELAY NO.2 (See page 21–87)
NOTICE:
Wear insulating gloves.
39. REMOVE SYSTEM MAIN RELAY NO.3 (See page 21–90)
NOTICE:
Wear insulating gloves.
40. REMOVE SYSTEM MAIN RESISTOR (See page 21–92)
NOTICE:
Wear insulating gloves.
41. REMOVE SYSTEM MAIN RELAY NO.1 (See page 21–83)
NOTICE:
Wear insulating gloves.
42. REMOVE BATTERY ECU ASSY (See page 21–98)

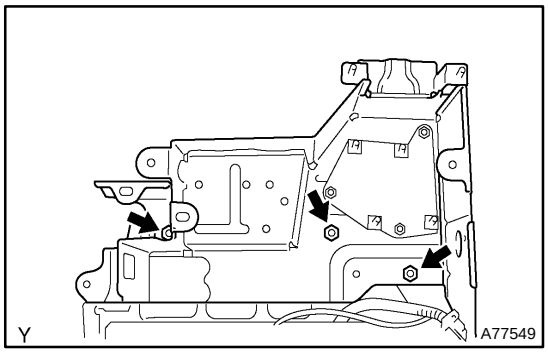

43. REMOVE BATTERY CARRIER SUB–ASSY UPR
NOTICE:
Wear insulating gloves.
(a) Remove the 3 nuts and upper battery carrier.

44. REMOVE BATTERY SPACER NO.1
NOTICE:
Wear insulating gloves.
45. REMOVE FRAME WIRE NO.2 (See page 21–74)
NOTICE:
Wear insulating gloves.

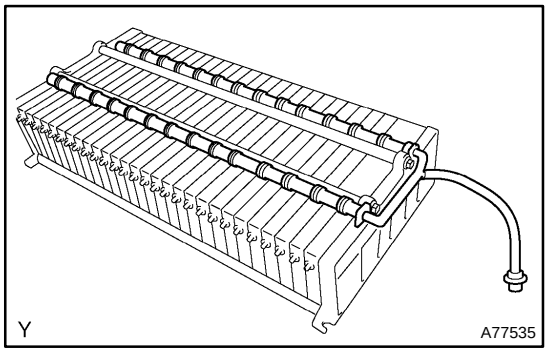

46. REMOVE BATTERY ROOM VENTILATION HOSE
NOTICE:
Wear insulating gloves and protective glasses.

cardiagn.com

47. INSTALL BATTERY ROOM VENTILATION HOSE
NOTICE:
Wear insulating gloves and protective glasses.
48. INSTALL FRAME WIRE NO.2 (See page 21–74)
NOTICE:
Wear insulating gloves.
49. INSTALL BATTERY SPACER NO.1
NOTICE:
Wear insulating gloves.

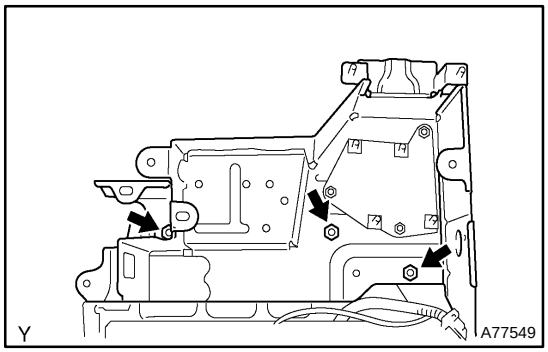

50. INSTALL BATTERY CARRIER SUB–ASSY UPR
NOTICE:
Wear insulating gloves.
(a) Install the upper battery carrier with the 3 nuts.
Torque: 5.5 N·m (56 kgf·cm, 49 in.·lbf)

51. INSTALL BATTERY ECU ASSY (See page 21–98)
52. INSTALL SYSTEM MAIN RELAY NO.1 (See page 21–83)
NOTICE:
Wear insulating gloves.
53. INSTALL SYSTEM MAIN RESISTOR (See page 21–92)
NOTICE:
Wear insulating gloves.
54. INSTALL SYSTEM MAIN RELAY NO.3 (See page 21–90)
NOTICE:
Wear insulating gloves.
55. INSTALL SYSTEM MAIN RELAY NO.2 (See page 21–87)
NOTICE:
Wear insulating gloves.
56. INSPECT CONTACT CONDITION (See page 21–83)
NOTICE:
Wear insulating gloves.
57. INSTALL JUNCTION BLOCK ASSY (See page 21–80)
NOTICE:
Wear insulating gloves.
58. INSTALL BATTERY PLUG (See page 21–77)
NOTICE:
Wear insulating gloves.
59. INSTALL WIRING HARNESS PROTECTOR COVER NO.1 (See page 21–77)
NOTICE:
Wear insulating gloves.
60. INSTALL BATTERY CLAMP PAD (See page 21–77)
NOTICE:
Wear insulating gloves.

cardiagn.com

61. INSTALL WIRING HARNESS PROTECTOR COVER NO.4
NOTICE:
Wear insulating gloves.
62. INSTALL WIRING HARNESS PROTECTOR COVER NO.2
NOTICE:
Wear insulating gloves.
63. INSTALL BATTERY CURRENT SENSOR (See page 21–95)
NOTICE:
Wear insulating gloves.
64. INSTALL MAIN BATTERY CABLE NO.2 (See page 21–70)
NOTICE:
Wear insulating gloves.
65. INSTALL MAIN BATTERY CABLE (See page 21–66)
NOTICE:
Wear insulating gloves.
66. INSTALL BATTERY CARRIER CUSHION NO.3 (See page 21–66)
NOTICE:
Wear insulating gloves.
67. INSTALL WIRING HARNESS PROTECTOR COVER NO.3
NOTICE:
Wear insulating gloves.
68. INSTALL WIRING HARNESS PROTECTOR COVER NO.1
NOTICE:
Wear insulating gloves.

69. INSTALL BATTERY COVER SUB–ASSY
NOTICE:
Wear insulating gloves.

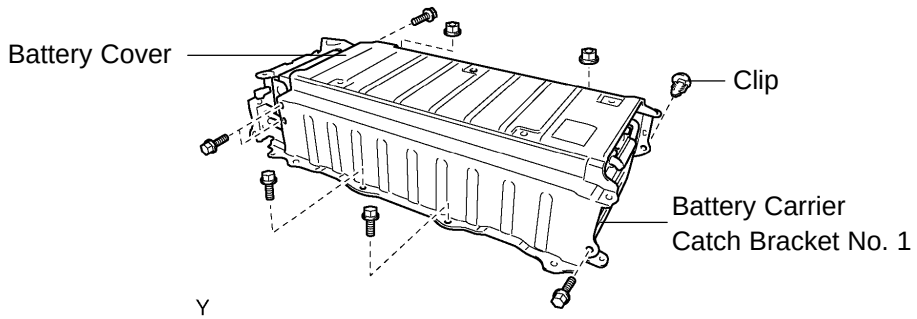

(a) Temporarily fasten the battery carrier catch bracket No. 1 to the battery room ventilation hose.
(b) Install the battery cover with the 6 bolts, 2 nuts and clip.
Torque: 8.0 N·m (82 kgf·cm, 71 in.·lbf)
(c) Install the protector on the battery cover.

cardiagn.com

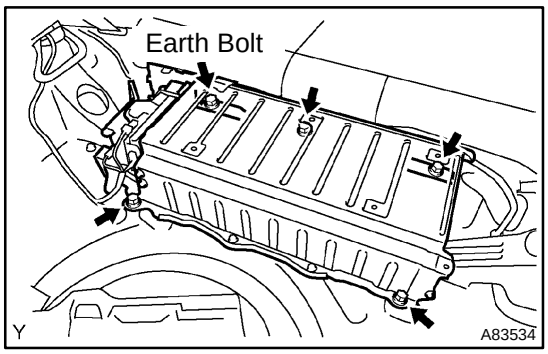

70. INSTALL HV BATTERY ASSY

(a) Install the HV battery with the earth bolt and 4 bolts.
Torque: 19 N·m (194 kgf·cm, 14 ft·lbf)

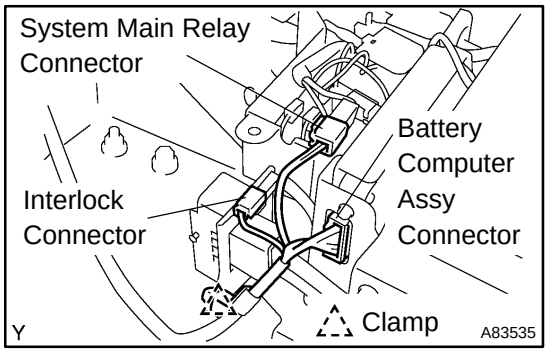

(b) Connect the system main relay connector.
NOTICE:
Wear insulating gloves.
(c) Connect the interlock connector.
NOTICE:
Wear insulating gloves.
(d) Connect the battery ECU connector.
NOTICE:
Wear insulating gloves.

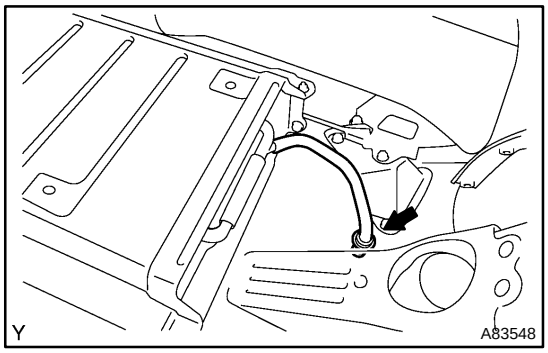

(e) Connect the battery room ventilation hose to the floor panel.

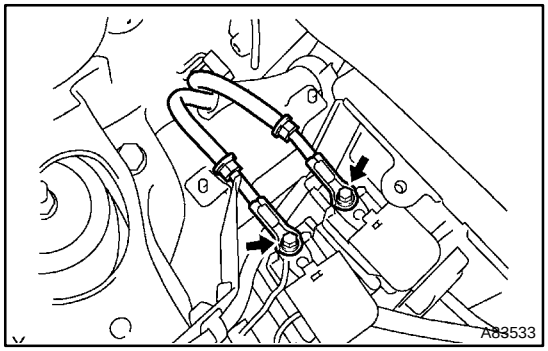

71. INSTALL FRAME WIRE
NOTICE:
Wear insulating gloves.
(a) Install the frame wire on the system main relay No. 2 and No. 3 with 2 new nuts.
Torque: 5.6 N·m (57 kgf·cm, 50 in.·lbf)
(b) Connect the 2 clamps, then install the frame wire to the upper battery carrier.

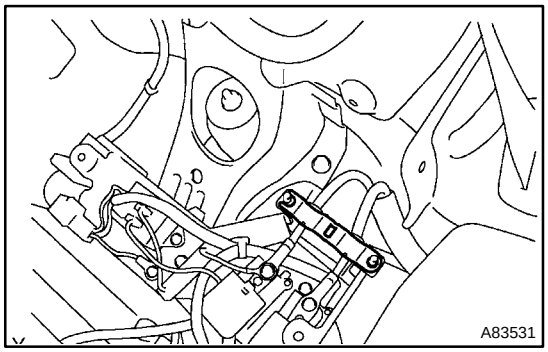

72. INSTALL JUNCTION TERMINAL
NOTICE:
Wear insulating gloves.

cardiagn.com

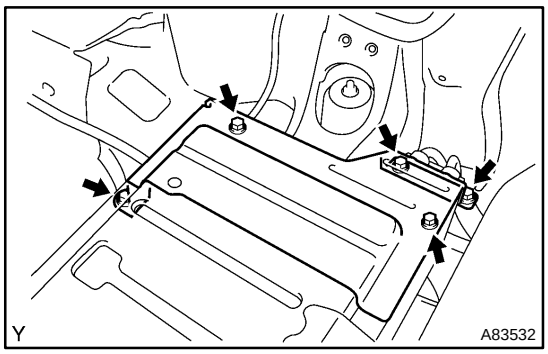

73. INSTALL BATTERY CARRIER PANEL NO.6

(a) Install the battery carrier panel No. 6 with the bolt and 2 nuts.
Torque: 7.5 N·m (76 kgf·cm, 66 in.·lbf)

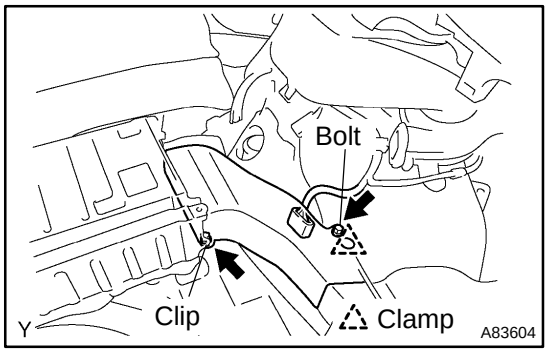

74. INSTALL QUARTER VENT DUCT

NOTICE:

The duct should not be half fit. Ensure that it is installed securely.

(a) Install the quarter ventilator duct with the bolt and clip.
Torque: 4.0 N·m (41 kgf·cm, 35 in.·lbf)

(b) Connect the connector.

(c) Install the clamp.

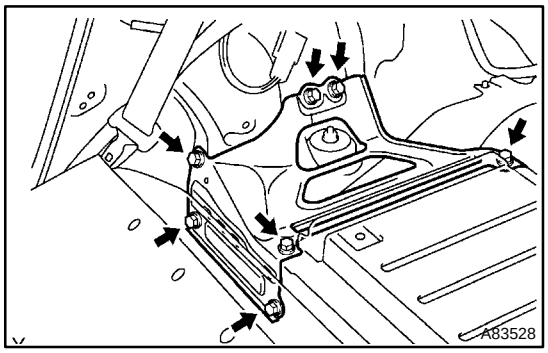

75. INSTALL BATTERY BRACKET REINFORCEMENT

(a) Install the battery bracket reinforcement with the 7 bolts.
Torque: 28 N·m (286 kgf·cm, 21 ft·lbf)

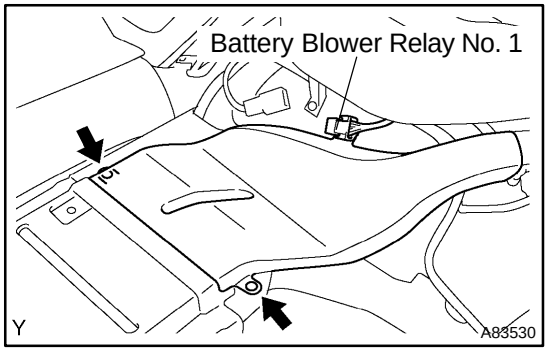

76. INSTALL QUARTER VENT DUCT INNER NO.2

(a) Insert the quarter vent duct inner No. 2 until the HV battery side touches the back.

(b) Slide the fitting surface of the quarter vent duct inner No. 2 downward, then let it fit with the battery blower assembly.

NOTICE:

The duct should not be half fit. Ensure that it is installed securely.

(c) Install the 2 clips on the quarter ventilation inner duct No. 2.

(d) Install the battery blower relay No. 1.

cardiagn.com

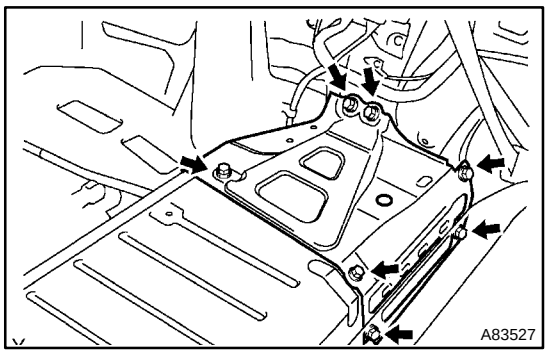

77. INSTALL BATTERY CARRIER BRACKET

(a) Install the battery carrier bracket with the 7 bolts.
Torque: 28 N·m (286 kgf·cm, 21 ft·lbf)

78. INSTALL DECK TRIM SIDE PANEL ASSY RH
79. INSTALL DECK TRIM SIDE PANEL ASSY LH
80. INSTALL DECK FLOOR BOX LH
81. INSTALL REAR FLOOR BOARD NO.4
82. INSTALL REAR SIDE SEAT BACK FRAME RH
83. INSTALL REAR SIDE SEAT BACK FRAME LH
84. INSTALL REAR FLOOR BOARD NO.1
85. INSTALL REAR SEAT CUSHION ASSY
86. INSTALL TONNEAU COVER ASSY
87. INSTALL DECK TRIM COVER REAR
88. INSTALL SERVICE PLUG GRIP (See page 21–116)
89. CONNECT BATTERY NEGATIVE TERMINAL
Torque: 6.0 N·m (61 kgf·cm, 53 in.·lbf)
90. INSTALL REAR FLOOR BOARD NO.3
91. INSTALL DECK FLOOR BOX REAR
92. INSTALL REAR FLOOR BOARD NO.2
93. POWER WINDOW CONTROL SYSTEM INITIALIZE (See page 01–28)

cardiagn.com

MAIN BATTERY CABLE

2103O–01

REPLACEMENT

NOTICE:

- **When working on the high voltage systems, always wear insulating gloves.**
- **After removing the service plug grip, do not operate the power switch as it may damage the hybrid vehicle control ECU.**
- **Keep the removed service plug in your pocket to prevent other technicians from reconnecting it while you are servicing the vehicle.**
- **After removing the service plug grip, do not touch the high voltage connectors and terminals for 5 minutes.**

1. **PRECAUTION (See page 21–7)**
2. **REMOVE REAR FLOOR BOARD NO.2 (See page 21–116)**
3. **REMOVE DECK FLOOR BOX REAR (See page 21–116)**
4. **REMOVE REAR FLOOR BOARD NO.3 (See page 21–116)**
5. **DISCONNECT BATTERY NEGATIVE TERMINAL (See page 21–116)**
6. **REMOVE SERVICE PLUG GRIP (See page 21–116)**
7. **REMOVE DECK TRIM COVER REAR (See page 21–54)**
8. **REMOVE TONNEAU COVER ASSY (See page 21–54)**
9. **REMOVE REAR SEAT CUSHION ASSY (See page 21–54)**
10. **REMOVE REAR FLOOR BOARD NO.1 (See page 21–54)**
11. **REMOVE REAR SIDE SEAT BACK FRAME LH (See page 21–54)**
12. **REMOVE REAR SIDE SEAT BACK FRAME RH (See page 21–54)**
13. **REMOVE REAR FLOOR BOARD NO.4 (See page 21–54)**
14. **REMOVE DECK FLOOR BOX LH (See page 21–54)**
15. **REMOVE DECK TRIM SIDE PANEL ASSY LH (See page 21–54)**
16. **REMOVE DECK TRIM SIDE PANEL ASSY RH (See page 21–54)**
17. **REMOVE BATTERY CARRIER BRACKET (See page 21–54)**
18. **REMOVE QUARTER VENT DUCT INNER NO.2 (See page 21–54)**
19. **REMOVE BATTERY BRACKET REINFORCEMENT (See page 21–54)**
20. **REMOVE QUARTER VENT DUCT (See page 21–54)**
21. **REMOVE BATTERY CARRIER PANEL NO.6 (See page 21–54)**
22. **REMOVE JUNCTION TERMINAL (See page 21–54)**

NOTICE:

Wear insulating gloves.

23. **REMOVE FRAME WIRE (See page 21–54)**

NOTICE:

Wear insulating gloves.

24. **REMOVE HV BATTERY ASSY (See page 21–54)**
25. **REMOVE BATTERY COVER SUB–ASSY (See page 21–54)**

cardiagn.com

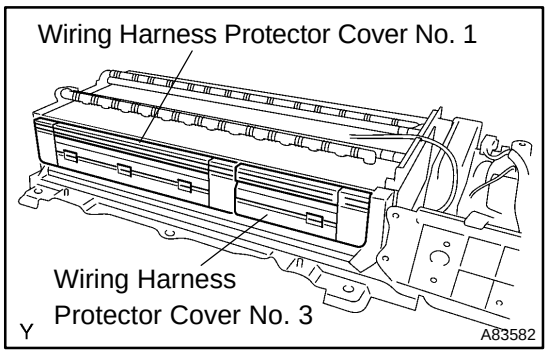

26. REMOVE WIRING HARNESS PROTECTOR COVER NO.1

NOTICE:

Wear insulating gloves.

27. REMOVE WIRING HARNESS PROTECTOR COVER NO.3

NOTICE:

Wear insulating gloves.

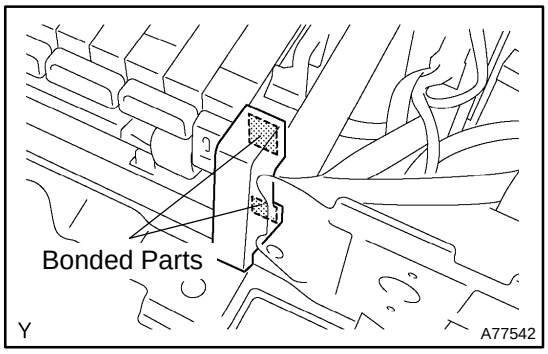

28. REMOVE BATTERY CARRIER CUSHION NO.3

NOTICE:

Wear insulating gloves.

(a) Peel off the bonded parts, then remove the battery carrier cushion No. 3.

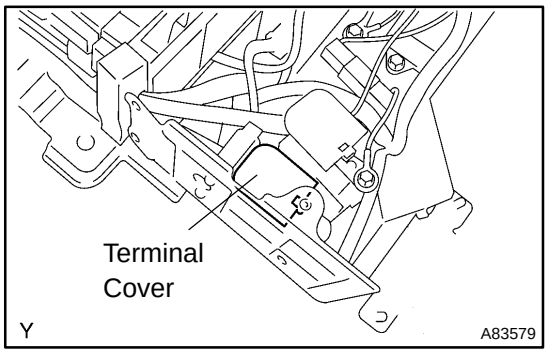

29. REMOVE MAIN BATTERY CABLE

NOTICE:

Wear insulating gloves.

(a) Remove the terminal cover shown in the illustration.

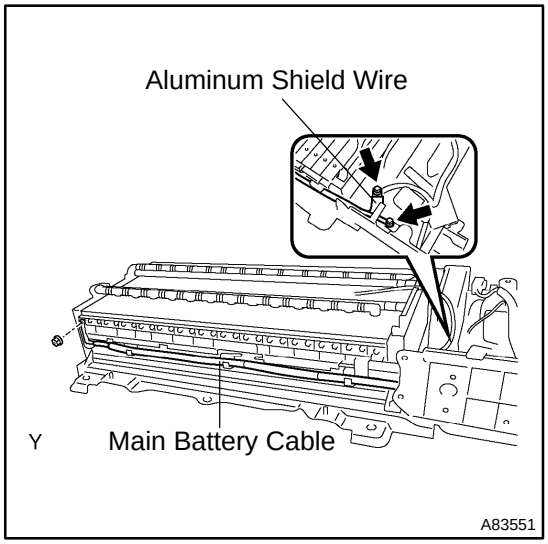

(b) Remove the nut, then disconnect the aluminum shield wire.

(c) Remove the nut, then disconnect the main battery cable from the system main relay No. 3.

(d) Remove the nut, then disconnect the main battery cable from the frame wire No. 2.

(e) Remove the main battery cable from the HV battery.

cardiagn.com

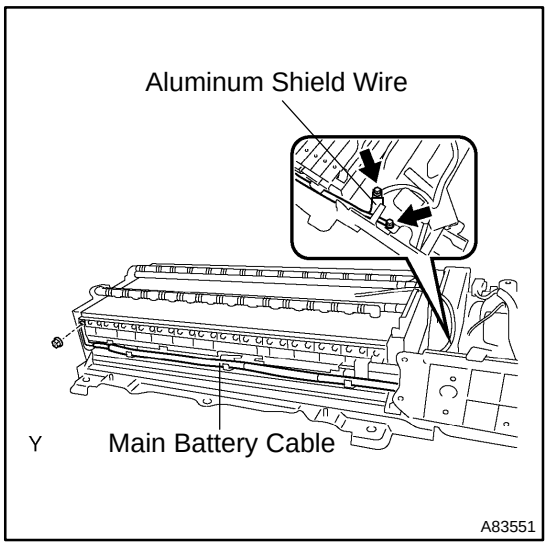

30. INSTALL MAIN BATTERY CABLE

NOTICE:

Wear insulating gloves.

(a) Temporarily fasten the main battery cable to the HV battery.

(b) Install the main battery cable to the frame wire No. 2 with a new nut.
Torque: 5.4 N·m (55 kgf·cm, 48 in.·lbf)

(c) Install the main battery cable to the system main relay No. 3 with a new nut.
Torque: 5.6 N·m (57 kgf·cm, 50 in.·lbf)

(d) Install the aluminum shield wire with a new nut.
Torque: 3.3 N·m (34 kgf·cm, 29 in.·lbf)

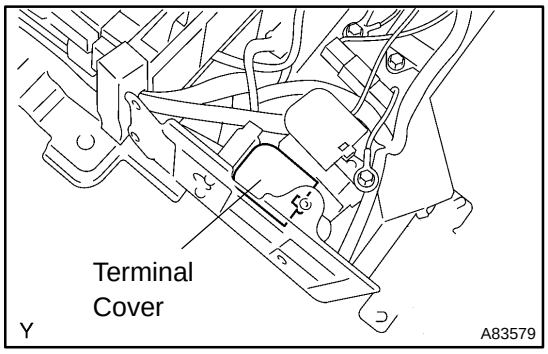

(e) Install the terminal cover shown in the illustration.

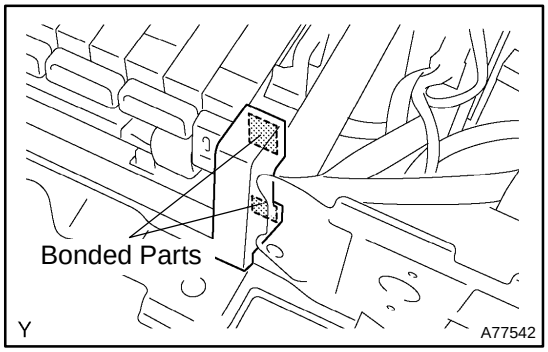

31. INSTALL BATTERY CARRIER CUSHION NO.3

NOTICE:

Wear insulating gloves.

(a) Degrease and clean the installation surface of the battery carrier cushion No. 3.

(b) Install a new battery carrier cushion No. 3.

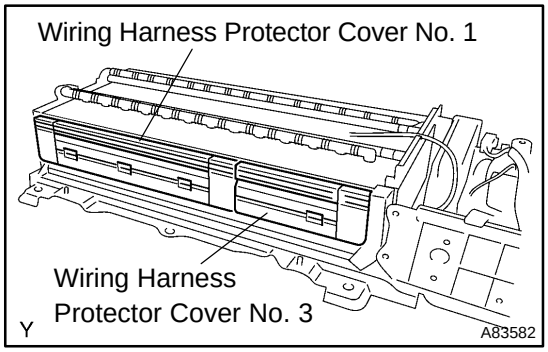

32. INSTALL WIRING HARNESS PROTECTOR COVER NO.1

NOTICE:

Wear insulating gloves.

33. INSTALL WIRING HARNESS PROTECTOR COVER NO.3

NOTICE:

Wear insulating gloves.

cardiagn.com

34. INSTALL BATTERY COVER SUB–ASSY (See page 21–54)
35. INSTALL HV BATTERY ASSY (See page 21–54)
36. INSTALL FRAME WIRE (See page 21–54)
NOTICE:
Wear insulating gloves.
37. INSTALL JUNCTION TERMINAL (See page 21–54)
NOTICE:
Wear insulating gloves.
38. INSTALL BATTERY CARRIER PANEL NO.6 (See page 21–54)
39. INSTALL QUARTER VENT DUCT (See page 21–54)
NOTICE:
Wear insulating gloves.
40. INSTALL BATTERY BRACKET REINFORCEMENT (See page 21–54)
41. INSTALL QUARTER VENT DUCT INNER NO.2 (See page 21–54)
42. INSTALL BATTERY CARRIER BRACKET (See page 21–54)
43. INSTALL DECK TRIM SIDE PANEL ASSY RH
44. INSTALL DECK TRIM SIDE PANEL ASSY LH
45. INSTALL DECK FLOOR BOX LH
46. INSTALL REAR FLOOR BOARD NO.4
47. INSTALL REAR SIDE SEAT BACK FRAME RH
48. INSTALL REAR SIDE SEAT BACK FRAME LH
49. INSTALL REAR FLOOR BOARD NO.1
50. INSTALL REAR SEAT CUSHION ASSY
51. INSTALL TONNEAU COVER ASSY
52. INSTALL DECK TRIM COVER REAR
53. INSTALL SERVICE PLUG GRIP (See page 21–116)
NOTICE:
Wear insulating gloves.
54. CONNECT BATTERY NEGATIVE TERMINAL
Torque: 6.0 N·m (61 kgf·cm, 53 in.·lbf)
55. INSTALL REAR FLOOR BOARD NO.3
56. INSTALL DECK FLOOR BOX REAR
57. INSTALL REAR FLOOR BOARD NO.2
58. POWER WINDOW CONTROL SYSTEM INITIALIZE (See page 01–28)

cardiagn.com

MAIN BATTERY CABLE NO.2

2103P–01

REPLACEMENT

NOTICE:

- **When working on the high voltage systems, always wear insulating gloves.**
- **After removing the service plug grip, do not operate the power switch as it may damage the hybrid vehicle control ECU.**
- **Keep the removed service plug in your pocket to prevent other technicians from reconnecting it while you are servicing the vehicle.**
- **After removing the service plug grip, do not touch the high voltage connectors and terminals for 5 minutes.**

1. **PRECAUTION (See page 21–7)**
2. **REMOVE REAR FLOOR BOARD NO.2 (See page 21–116)**
3. **REMOVE DECK FLOOR BOX REAR (See page 21–116)**
4. **REMOVE REAR FLOOR BOARD NO.3 (See page 21–116)**
5. **DISCONNECT BATTERY NEGATIVE TERMINAL (See page 21–116)**
6. **REMOVE SERVICE PLUG GRIP (See page 21–116)**
7. **REMOVE DECK TRIM COVER REAR (See page 21–54)**
8. **REMOVE TONNEAU COVER ASSY (See page 21–54)**
9. **REMOVE REAR SEAT CUSHION ASSY (See page 21–54)**
10. **REMOVE REAR FLOOR BOARD NO.1 (See page 21–54)**
11. **REMOVE REAR SIDE SEAT BACK FRAME LH (See page 21–54)**
12. **REMOVE REAR SIDE SEAT BACK FRAME RH (See page 21–54)**
13. **REMOVE REAR FLOOR BOARD NO.4 (See page 21–54)**
14. **REMOVE DECK FLOOR BOX LH (See page 21–54)**
15. **REMOVE DECK TRIM SIDE PANEL ASSY LH (See page 21–54)**
16. **REMOVE DECK TRIM SIDE PANEL ASSY RH (See page 21–54)**
17. **REMOVE BATTERY CARRIER BRACKET (See page 21–54)**
18. **REMOVE QUARTER VENT DUCT INNER NO.2 (See page 21–54)**
19. **REMOVE BATTERY BRACKET REINFORCEMENT (See page 21–54)**
20. **REMOVE QUARTER VENT DUCT (See page 21–54)**
21. **REMOVE BATTERY CARRIER PANEL NO.6 (See page 21–54)**
22. **REMOVE JUNCTION TERMINAL (See page 21–54)**

NOTICE:

Wear insulating gloves.

23. **REMOVE FRAME WIRE (See page 21–54)**

NOTICE:

Wear insulating gloves.

24. **REMOVE HV BATTERY ASSY (See page 21–54)**
25. **REMOVE BATTERY COVER SUB–ASSY (See page 21–54)**

cardiagn.com

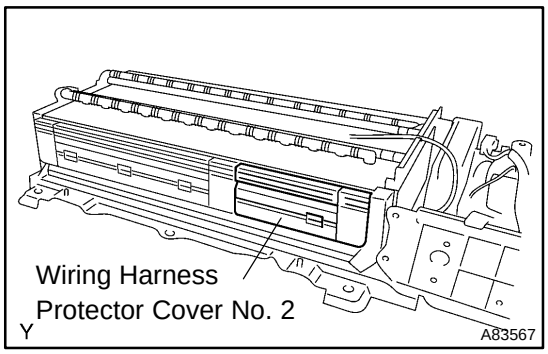

26. REMOVE WIRING HARNESS PROTECTOR COVER NO.3

NOTICE:

Wear insulating gloves.

27. REMOVE BATTERY CARRIER CUSHION NO.3 (See page 21–66)

NOTICE:

Wear insulating gloves.

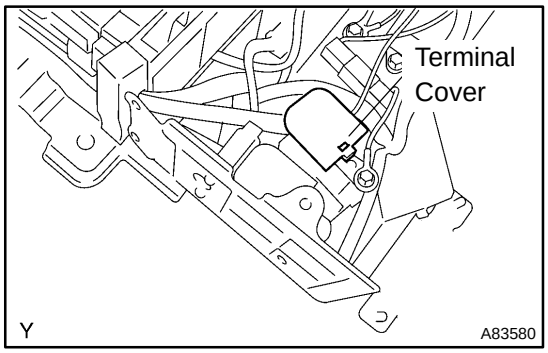

28. REMOVE MAIN BATTERY CABLE NO.2

NOTICE:

Wear insulating gloves.

(a) Remove the terminal cover shown in the illustration.

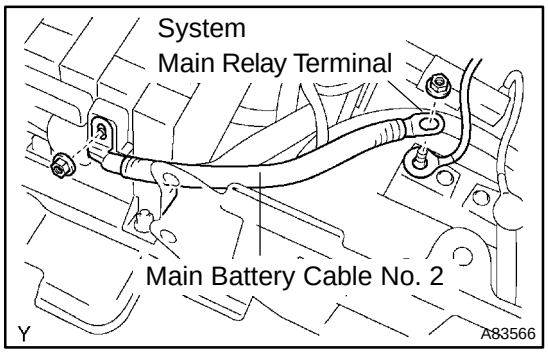

(b) Remove the nut, then disconnect the system main relay terminal and main battery cable No. 2 from the system main relay No. 2.

(c) Remove the nut, then disconnect the frame wire from the main battery cable No. 2.

(d) Remove the main battery cable No. 2 from the HV battery.

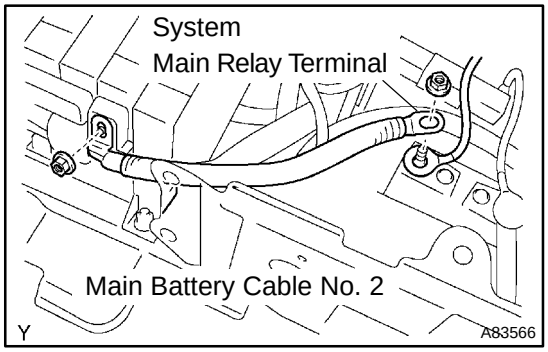

29. INSTALL MAIN BATTERY CABLE NO.2

NOTICE:

Wear insulating gloves.

(a) Temporarily fasten the main battery cable No. 2 to the HV battery.

(b) Install the main battery cable No. 2 to the frame wire No. 2 with a new nut.
Torque: 5.4 N·m (55 kgf·cm, 48 in.·lbf)

(c) Temporarily fasten the main battery cable and system main relay terminal, in that order, to the system main relay No. 3, then tighten the new nut.
Torque: 5.6 N·m (57 kgf·cm, 50 in.·lbf)

cardiagn.com

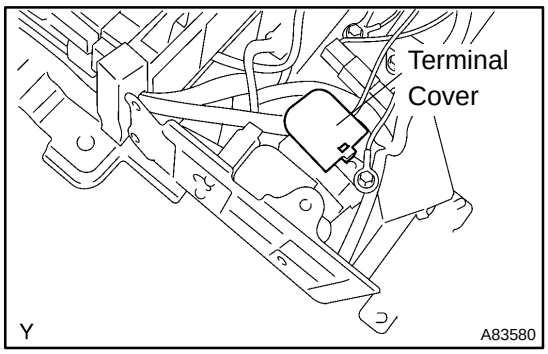

(d) Install the terminal cover shown in the illustration.

30. INSTALL BATTERY CARRIER CUSHION NO.3 (See page 21–66)
NOTICE:
Wear insulating gloves.

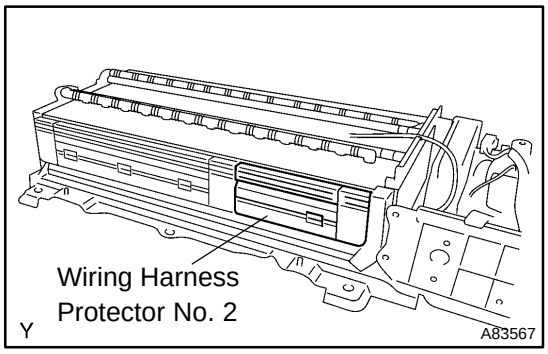

31. INSTALL WIRING HARNESS PROTECTOR COVER NO.3
NOTICE:
Wear insulating gloves.

32. INSTALL BATTERY COVER SUB–ASSY (See page 21–54)
33. INSTALL HV BATTERY ASSY (See page 21–54)
34. INSTALL FRAME WIRE (See page 21–54)
NOTICE:
Wear insulating gloves.
35. INSTALL JUNCTION TERMINAL (See page 21–54)
NOTICE:
Wear insulating gloves.
36. INSTALL BATTERY CARRIER PANEL NO.6 (See page 21–54)
37. INSTALL QUARTER VENT DUCT (See page 21–54)
38. INSTALL BATTERY BRACKET REINFORCEMENT (See page 21–54)
39. INSTALL QUARTER VENT DUCT INNER NO.2 (See page 21–54)
40. INSTALL BATTERY CARRIER BRACKET (See page 21–54)
41. INSTALL DECK TRIM SIDE PANEL ASSY RH
42. INSTALL DECK TRIM SIDE PANEL ASSY LH
43. INSTALL DECK FLOOR BOX LH
44. INSTALL REAR FLOOR BOARD NO.4
45. INSTALL REAR SIDE SEAT BACK FRAME RH
46. INSTALL REAR SIDE SEAT BACK FRAME LH
47. INSTALL REAR FLOOR BOARD NO.1
48. INSTALL REAR SEAT CUSHION ASSY
49. INSTALL TONNEAU COVER ASSY
50. INSTALL DECK TRIM COVER REAR

cardiagn.com

51. INSTALL SERVICE PLUG GRIP (See page 21–116)

NOTICE:

Wear insulating gloves.

52. CONNECT BATTERY NEGATIVE TERMINAL

Torque: 6.0 N·m (61 kgf·cm, 53 in.·lbf)

53. INSTALL REAR FLOOR BOARD NO.3

54. INSTALL DECK FLOOR BOX REAR

55. INSTALL REAR FLOOR BOARD NO.2

56. POWER WINDOW CONTROL SYSTEM INITIALIZE (See page 01–28)

cardiagn.com

FRAME WIRE NO.2

2103Q–01

REPLACEMENT

NOTICE:

- **When working on the high voltage systems, always wear insulating gloves.**
- **After removing the service plug grip, do not operate the power switch as it may damage the hybrid vehicle control ECU.**
- **Keep the removed service plug in your pocket to prevent other technicians from reconnecting it while you are servicing the vehicle.**
- **After removing the service plug grip, do not touch the high voltage connectors and terminals for 5 minutes.**

1. **PRECAUTION (See page 21–7)**
2. **REMOVE REAR FLOOR BOARD NO.2 (See page 21–116)**
3. **REMOVE DECK FLOOR BOX REAR (See page 21–116)**
4. **REMOVE REAR FLOOR BOARD NO.3 (See page 21–116)**
5. **DISCONNECT BATTERY NEGATIVE TERMINAL (See page 21–116)**
6. **REMOVE SERVICE PLUG GRIP (See page 21–116)**
7. **REMOVE DECK TRIM COVER REAR (See page 21–54)**
8. **REMOVE TONNEAU COVER ASSY (See page 21–54)**
9. **REMOVE REAR SEAT CUSHION ASSY (See page 21–54)**
10. **REMOVE REAR FLOOR BOARD NO.1 (See page 21–54)**
11. **REMOVE REAR SIDE SEAT BACK FRAME LH (See page 21–54)**
12. **REMOVE REAR SIDE SEAT BACK FRAME RH (See page 21–54)**
13. **REMOVE REAR FLOOR BOARD NO.4 (See page 21–54)**
14. **REMOVE DECK FLOOR BOX LH (See page 21–54)**
15. **REMOVE DECK TRIM SIDE PANEL ASSY LH (See page 21–54)**
16. **REMOVE DECK TRIM SIDE PANEL ASSY RH (See page 21–54)**
17. **REMOVE BATTERY CARRIER BRACKET (See page 21–54)**
18. **REMOVE QUARTER VENT DUCT INNER NO.2 (See page 21–54)**
19. **REMOVE BATTERY BRACKET REINFORCEMENT (See page 21–54)**
20. **REMOVE QUARTER VENT DUCT (See page 21–54)**
21. **REMOVE BATTERY CARRIER PANEL NO.6 (See page 21–54)**
22. **REMOVE JUNCTION TERMINAL (See page 21–54)**

NOTICE:
Wear insulating gloves.

23. **REMOVE FRAME WIRE (See page 21–54)**

NOTICE:
Wear insulating gloves.

24. **REMOVE HV BATTERY ASSY (See page 21–54)**
25. **REMOVE BATTERY COVER SUB–ASSY (See page 21–54)**
26. **REMOVE WIRING HARNESS PROTECTOR COVER NO.1 (See page 21–66)**

NOTICE:
Wear insulating gloves.

27. **REMOVE WIRING HARNESS PROTECTOR COVER NO.3 (See page 21–66)**

NOTICE:
Wear insulating gloves.

28. **REMOVE BATTERY CARRIER CUSHION NO.3 (See page 21–66)**

NOTICE:
Wear insulating gloves.

cardiagn.com

29. REMOVE MAIN BATTERY CABLE (See page 21–66)
NOTICE:
Wear insulating gloves.
30. REMOVE MAIN BATTERY CABLE NO.2 (See page 21–70)
NOTICE:
Wear insulating gloves.

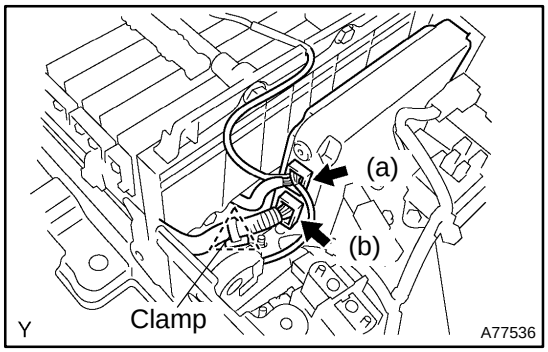

31. REMOVE FRAME WIRE NO.2
NOTICE:
Wear insulating gloves.
(a) Disconnect the temperature sensor connector from the battery ECU.
(b) Remove the clamp, then disconnect the frame wire No. 2 connector from the battery ECU.

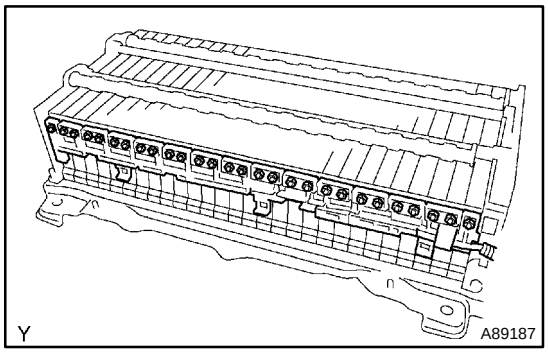

(c) Remove the 26 nuts and frame wire No. 2.

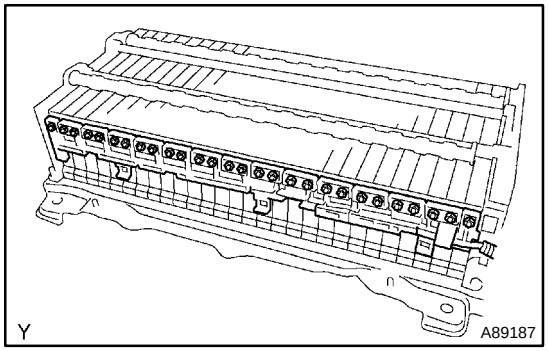

32. INSTALL FRAME WIRE NO.2
NOTICE:
Wear insulating gloves.
(a) Install the frame wire No. 2 with new 26 nuts.
Torque: 5.4 N·m (55 kgf·cm, 48 in.·lbf)

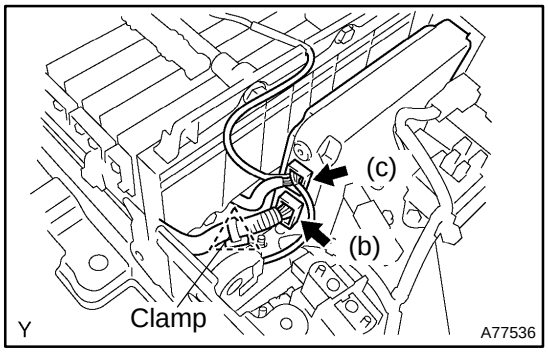

(b) Connect the frame wire No. 2 connector to the battery ECU, then connect the clamp.
(c) Connect the temperature sensor connector to the battery ECU.

cardiagn.com

33. INSTALL MAIN BATTERY CABLE NO.2 (See page 21–70)
NOTICE:
Wear insulating gloves.
34. INSTALL MAIN BATTERY CABLE (See page 21–66)
NOTICE:
Wear insulating gloves.
35. INSTALL BATTERY CARRIER CUSHION NO.3 (See page 21–66)
NOTICE:
Wear insulating gloves.
36. INSTALL WIRING HARNESS PROTECTOR COVER NO.1 (See page 21–66)
NOTICE:
Wear insulating gloves.
37. INSTALL WIRING HARNESS PROTECTOR COVER NO.3 (See page 21–66)
NOTICE:
Wear insulating gloves.
38. INSTALL BATTERY COVER SUB–ASSY (See page 21–54)
39. INSTALL HV BATTERY ASSY (See page 21–54)
40. INSTALL FRAME WIRE (See page 21–54)
NOTICE:
Wear insulating gloves.
41. INSTALL JUNCTION TERMINAL (See page 21–54)
NOTICE:
Wear insulating gloves.
42. INSTALL BATTERY CARRIER PANEL NO.6 (See page 21–54)
43. INSTALL QUARTER VENT DUCT (See page 21–54)
44. INSTALL BATTERY BRACKET REINFORCEMENT (See page 21–54)
45. INSTALL QUARTER VENT DUCT INNER NO.2 (See page 21–54)
46. INSTALL BATTERY CARRIER BRACKET (See page 21–54)
47. INSTALL DECK TRIM SIDE PANEL ASSY RH
48. INSTALL DECK TRIM SIDE PANEL ASSY LH
49. INSTALL DECK FLOOR BOX LH
50. INSTALL REAR FLOOR BOARD NO.4
51. INSTALL REAR SIDE SEAT BACK FRAME RH
52. INSTALL REAR SIDE SEAT BACK FRAME LH
53. INSTALL REAR FLOOR BOARD NO.1
54. INSTALL REAR SEAT CUSHION ASSY
55. INSTALL TONNEAU COVER ASSY
56. INSTALL DECK TRIM COVER REAR
57. INSTALL SERVICE PLUG GRIP (See page 21–116)
NOTICE:
Wear insulating gloves.
58. CONNECT BATTERY NEGATIVE TERMINAL
Torque: 6.0 N·m (61 kgf·cm, 53 in.·lbf)
59. INSTALL REAR FLOOR BOARD NO.3
60. INSTALL DECK FLOOR BOX REAR
61. INSTALL REAR FLOOR BOARD NO.2
62. POWER WINDOW CONTROL SYSTEM INITIALIZE (See page 01–28)

cardiagn.com

BATTERY PLUG

2103R–01

REPLACEMENT

NOTICE:

- **When working on the high voltage systems, always wear insulating gloves.**
- **After removing the service plug grip, do not operate the power switch as it may damage the hybrid vehicle control ECU.**
- **Keep the removed service plug in your pocket to prevent other technicians from reconnecting it while you are servicing the vehicle.**
- **After removing the service plug grip, do not touch the high voltage connectors and terminals for 5 minutes.**

1. **PRECAUTION (See page 21–7)**
2. **REMOVE REAR FLOOR BOARD NO.2 (See page 21–116)**
3. **REMOVE DECK FLOOR BOX REAR (See page 21–116)**
4. **REMOVE REAR FLOOR BOARD NO.3 (See page 21–116)**
5. **DISCONNECT BATTERY NEGATIVE TERMINAL (See page 21–116)**
6. **REMOVE SERVICE PLUG GRIP (See page 21–116)**
7. **REMOVE DECK TRIM COVER REAR (See page 21–54)**
8. **REMOVE TONNEAU COVER ASSY (See page 21–54)**
9. **REMOVE REAR SEAT CUSHION ASSY (See page 21–54)**
10. **REMOVE REAR FLOOR BOARD NO.1 (See page 21–54)**
11. **REMOVE REAR SIDE SEAT BACK FRAME LH (See page 21–54)**
12. **REMOVE REAR SIDE SEAT BACK FRAME RH (See page 21–54)**
13. **REMOVE REAR FLOOR BOARD NO.4 (See page 21–54)**
14. **REMOVE DECK FLOOR BOX LH (See page 21–54)**
15. **REMOVE DECK TRIM SIDE PANEL ASSY LH (See page 21–54)**
16. **REMOVE DECK TRIM SIDE PANEL ASSY RH (See page 21–54)**
17. **REMOVE BATTERY CARRIER BRACKET (See page 21–54)**
18. **REMOVE QUARTER VENT DUCT INNER NO.2 (See page 21–54)**
19. **REMOVE BATTERY BRACKET REINFORCEMENT (See page 21–54)**
20. **REMOVE QUARTER VENT DUCT (See page 21–54)**
21. **REMOVE BATTERY CARRIER PANEL NO.6 (See page 21–54)**
22. **REMOVE JUNCTION TERMINAL (See page 21–54)**

NOTICE:

Wear insulating gloves.

23. **REMOVE FRAME WIRE (See page 21–54)**

NOTICE:

Wear insulating gloves.

24. **REMOVE HV BATTERY ASSY (See page 21–54)**
25. **REMOVE BATTERY COVER SUB–ASSY (See page 21–54)**

cardiagn.com

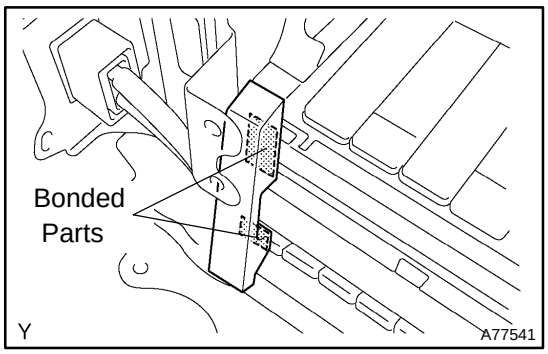

26. REMOVE BATTERY CLAMP PAD (BATTERY CARRIER CUSHION NO.1)

NOTICE:

Wear insulating gloves.

(a) Peel off the bonded parts, then remove the battery clamp pad (the battery carrier cushion No. 1).

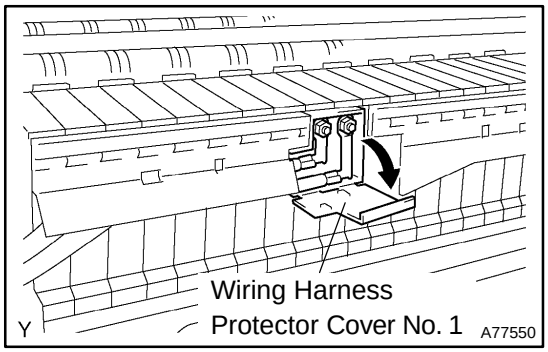

27. REMOVE WIRING HARNESS PROTECTOR COVER NO.1

(a) Flip open the wiring harness protector cover.

(b) Remove the 2 nuts, then disconnect the service plug.

(c) Remove the wiring harness protector cover No. 1.

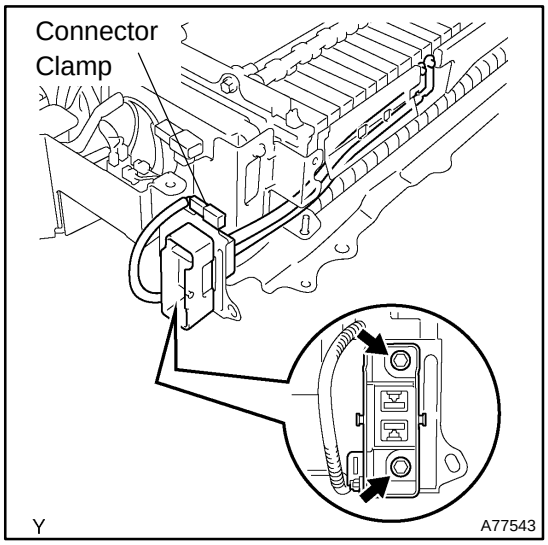

28. REMOVE BATTERY PLUG

(a) Disconnect the connector clamp.

(b) Remove the 2 bolts, then disconnect the service plug from the upper battery carrier.

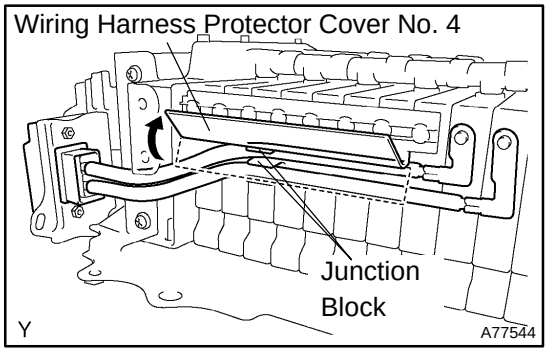

(c) Flip open the wiring harness protector cover No. 4 shown in the illustration, then remove the service plug from the junction block.

29. INSTALL BATTERY PLUG

(a) Temporarily fasten the service plug.

(b) Install the service plug to the upper battery carrier with the 2 bolts.
Torque: 5.4 N·m (55 kgf·cm, 48 in.·lbf)

cardiagn.com

(c) Assemble the connector clamp.

30. INSTALL WIRING HARNESS PROTECTOR COVER NO.1

(a) Temporarily fasten the wiring harness protector cover No. 1 to the service plug.

(b) Install the wiring harness protector cover No. 1 through the service plug with 2 new nuts.
Torque: 5.4 N·m (55 kgf·cm, 48 in.·lbf)

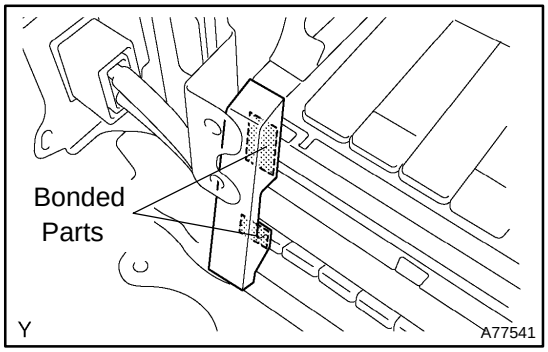

31. INSTALL BATTERY CLAMP PAD (BATTERY CARRIER CUSHION NO.1)

NOTICE:
Wear insulating gloves.

(a) Install a new clamp pad (the battery carrier cushion No. 1).

32. INSTALL BATTERY COVER SUB–ASSY (See page 21–54)
33. INSTALL HV BATTERY ASSY (See page 21–54)
34. INSTALL FRAME WIRE (See page 21–54)
NOTICE:
Wear insulating gloves.
35. INSTALL JUNCTION TERMINAL (See page 21–54)
NOTICE:
Wear insulating gloves.
36. INSTALL BATTERY CARRIER PANEL NO.6 (See page 21–54)
37. INSTALL QUARTER VENT DUCT (See page 21–54)
38. INSTALL BATTERY BRACKET REINFORCEMENT (See page 21–54)
39. INSTALL QUARTER VENT DUCT INNER NO.2 (See page 21–54)
40. INSTALL BATTERY CARRIER BRACKET (See page 21–54)
41. INSTALL DECK TRIM SIDE PANEL ASSY RH
42. INSTALL DECK TRIM SIDE PANEL ASSY LH
43. INSTALL DECK FLOOR BOX LH
44. INSTALL REAR FLOOR BOARD NO.4
45. INSTALL REAR SIDE SEAT BACK FRAME RH
46. INSTALL REAR SIDE SEAT BACK FRAME LH
47. INSTALL REAR FLOOR BOARD NO.1
48. INSTALL REAR SEAT CUSHION ASSY
49. INSTALL TONNEAU COVER ASSY
50. INSTALL DECK TRIM COVER REAR
51. INSTALL SERVICE PLUG GRIP (See page 21–116)
NOTICE:
Wear insulating gloves.
52. CONNECT BATTERY NEGATIVE TERMINAL
Torque: 6.0 N·m (61 kgf·cm, 53 in.·lbf)
53. INSTALL REAR FLOOR BOARD NO.3
54. INSTALL DECK FLOOR BOX REAR
55. INSTALL REAR FLOOR BOARD NO.2
56. POWER WINDOW CONTROL SYSTEM INITIALIZE (See page 01–28)

cardiagn.com

JUNCTION BLOCK ASSY

2103S–01

REPLACEMENT

NOTICE:

- **When working on the high voltage systems, always wear insulating gloves.**
- **After removing the service plug grip, do not operate the power switch as it may damage the hybrid vehicle control ECU.**
- **Keep the removed service plug in your pocket to prevent other technicians from reconnecting it while you are servicing the vehicle.**
- **After removing the service plug grip, do not touch the high voltage connectors and terminals for 5 minutes.**

1. **PRECAUTION (See page 21–7)**
2. **REMOVE REAR FLOOR BOARD NO.2 (See page 21–116)**
3. **REMOVE DECK FLOOR BOX REAR (See page 21–116)**
4. **REMOVE REAR FLOOR BOARD NO.3 (See page 21–116)**
5. **DISCONNECT BATTERY NEGATIVE TERMINAL (See page 21–116)**
6. **REMOVE SERVICE PLUG GRIP (See page 21–116)**
7. **REMOVE DECK TRIM COVER REAR (See page 21–54)**
8. **REMOVE TONNEAU COVER ASSY (See page 21–54)**
9. **REMOVE REAR SEAT CUSHION ASSY (See page 21–54)**
10. **REMOVE REAR FLOOR BOARD NO.1 (See page 21–54)**
11. **REMOVE REAR SIDE SEAT BACK FRAME LH (See page 21–54)**
12. **REMOVE REAR SIDE SEAT BACK FRAME RH (See page 21–54)**
13. **REMOVE REAR FLOOR BOARD NO.4 (See page 21–54)**
14. **REMOVE DECK FLOOR BOX LH (See page 21–54)**
15. **REMOVE DECK TRIM SIDE PANEL ASSY LH (See page 21–54)**
16. **REMOVE DECK TRIM SIDE PANEL ASSY RH (See page 21–54)**
17. **REMOVE BATTERY CARRIER BRACKET (See page 21–54)**
18. **REMOVE QUARTER VENT DUCT INNER NO.2 (See page 21–54)**
19. **REMOVE BATTERY BRACKET REINFORCEMENT (See page 21–54)**
20. **REMOVE QUARTER VENT DUCT (See page 21–54)**
21. **REMOVE BATTERY CARRIER PANEL NO.6 (See page 21–54)**
22. **REMOVE JUNCTION TERMINAL (See page 21–54)**

NOTICE:

Wear insulating gloves.

23. **REMOVE FRAME WIRE (See page 21–54)**

NOTICE:

Wear insulating gloves.

24. **REMOVE HV BATTERY ASSY (See page 21–54)**
25. **REMOVE BATTERY COVER SUB–ASSY (See page 21–54)**

cardiagn.com

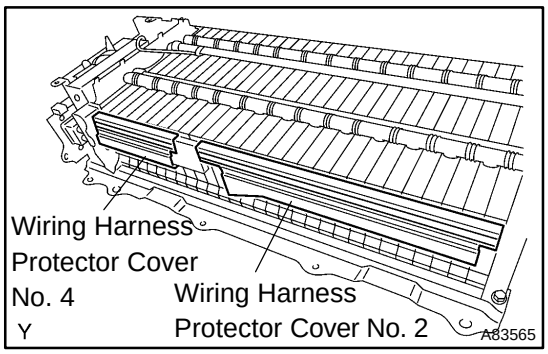

26. REMOVE WIRING HARNESS PROTECTOR COVER NO.2

NOTICE:

Wear insulating gloves.

27. REMOVE WIRING HARNESS PROTECTOR COVER NO.4

NOTICE:

Wear insulating gloves.

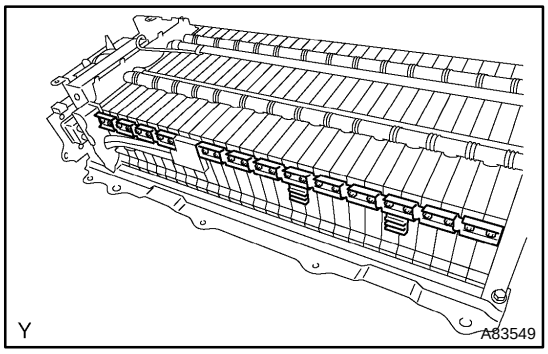

28. REMOVE JUNCTION BLOCK ASSY

NOTICE:

Wear insulating gloves.

(a) Remove the 26 nuts and junction block assembly.

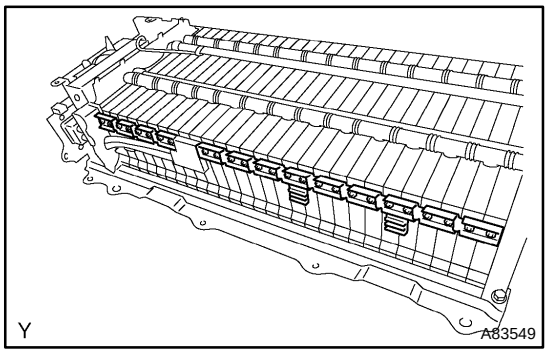

29. INSTALL JUNCTION BLOCK ASSY

NOTICE:

Wear insulating gloves.

(a) Install the junction block assembly with 26 new nuts.
Torque: 5.4 N·m (55 kgf·cm, 48 in.·lbf)

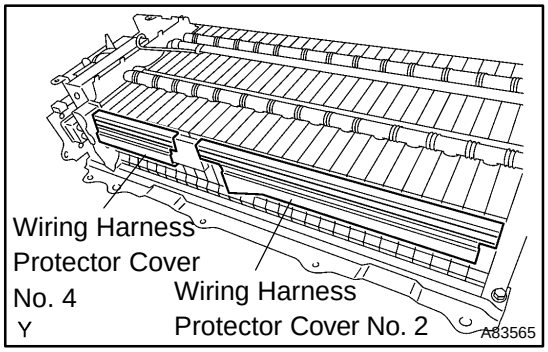

30. INSTALL WIRING HARNESS PROTECTOR COVER NO.2

NOTICE:

Wear insulating gloves.

31. INSTALL WIRING HARNESS PROTECTOR COVER NO.4

NOTICE:

Wear insulating gloves.

cardiagn.com

32. INSTALL BATTERY COVER SUB–ASSY (See page 21–54)
33. INSTALL HV BATTERY ASSY (See page 21–54)
34. INSTALL FRAME WIRE (See page 21–54)
NOTICE:
Wear insulating gloves.
35. INSTALL JUNCTION TERMINAL (See page 21–54)
NOTICE:
Wear insulating gloves.
36. INSTALL BATTERY CARRIER PANEL NO.6 (See page 21–54)
37. INSTALL QUARTER VENT DUCT (See page 21–54)
38. INSTALL BATTERY BRACKET REINFORCEMENT (See page 21–54)
39. INSTALL QUARTER VENT DUCT INNER NO.2 (See page 21–54)
40. INSTALL BATTERY CARRIER BRACKET (See page 21–54)
41. INSTALL DECK TRIM SIDE PANEL ASSY RH
42. INSTALL DECK TRIM SIDE PANEL ASSY LH
43. INSTALL DECK FLOOR BOX LH
44. INSTALL REAR FLOOR BOARD NO.4
45. INSTALL REAR SIDE SEAT BACK FRAME RH
46. INSTALL REAR SIDE SEAT BACK FRAME LH
47. INSTALL REAR FLOOR BOARD NO.1
48. INSTALL REAR SEAT CUSHION ASSY
49. INSTALL TONNEAU COVER ASSY
50. INSTALL DECK TRIM COVER REAR
51. INSTALL SERVICE PLUG GRIP (See page 21–116)
NOTICE:
Wear insulating gloves.
52. CONNECT BATTERY NEGATIVE TERMINAL
Torque: 6.0 N·m (61 kgf·cm, 53 in.·lbf)
53. INSTALL REAR FLOOR BOARD NO.3
54. INSTALL DECK FLOOR BOX REAR
55. INSTALL REAR FLOOR BOARD NO.2
56. POWER WINDOW CONTROL SYSTEM INITIALIZE (See page 01–28)

cardiagn.com

SYSTEM MAIN RELAY NO.1

2103T–01

REPLACEMENT

NOTICE:

- **When working on the high voltage systems, always wear insulating gloves.**
- **After removing the service plug grip, do not operate the power switch as it may damage the hybrid vehicle control ECU.**
- **Keep the removed service plug in your pocket to prevent other technicians from reconnecting it while you are servicing the vehicle.**
- **After removing the service plug grip, do not touch the high voltage connectors and terminals for 5 minutes.**

1. **PRECAUTION (See page 21–7)**
2. **REMOVE REAR FLOOR BOARD NO.2 (See page 21–116)**
3. **REMOVE DECK FLOOR BOX REAR (See page 21–116)**
4. **REMOVE REAR FLOOR BOARD NO.3 (See page 21–116)**
5. **DISCONNECT BATTERY NEGATIVE TERMINAL (See page 21–116)**
6. **REMOVE SERVICE PLUG GRIP (See page 21–116)**
7. **REMOVE DECK TRIM COVER REAR (See page 21–54)**
8. **REMOVE TONNEAU COVER ASSY (See page 21–54)**
9. **REMOVE REAR SEAT CUSHION ASSY (See page 21–54)**
10. **REMOVE REAR FLOOR BOARD NO.1 (See page 21–54)**
11. **REMOVE REAR SIDE SEAT BACK FRAME LH (See page 21–54)**
12. **REMOVE REAR FLOOR BOARD NO.4 (See page 21–54)**
13. **REMOVE DECK FLOOR BOX LH (See page 21–54)**
14. **REMOVE DECK TRIM SIDE PANEL ASSY LH (See page 21–54)**
15. **REMOVE BATTERY CARRIER BRACKET (See page 21–54)**
16. **REMOVE BATTERY CARRIER PANEL NO.6 (See page 21–54)**
17. **REMOVE JUNCTION TERMINAL (See page 21–54)**

NOTICE:

Wear insulating gloves.

18. **SEPARATE FRAME WIRE (See page 21–54)**

NOTICE:

Wear insulating gloves.

19. **REMOVE SYSTEM MAIN RELAY NO.2 (See page 21–87)**

NOTICE:

Wear insulating gloves.

20. **REMOVE SYSTEM MAIN RELAY NO.3 (See page 21–90)**

NOTICE:

Wear insulating gloves.

cardiagn.com

21. REMOVE SYSTEM MAIN RELAY NO.1

NOTICE:

Wear insulating gloves.

(a) Disconnect the connector.

(b) Remove the nut, then disconnect the ground terminal.

(c) Disconnect the 2 clamps.

(d) Remove the system main relay connector.

(e) Remove the 2 bolts and system main relay No. 1.

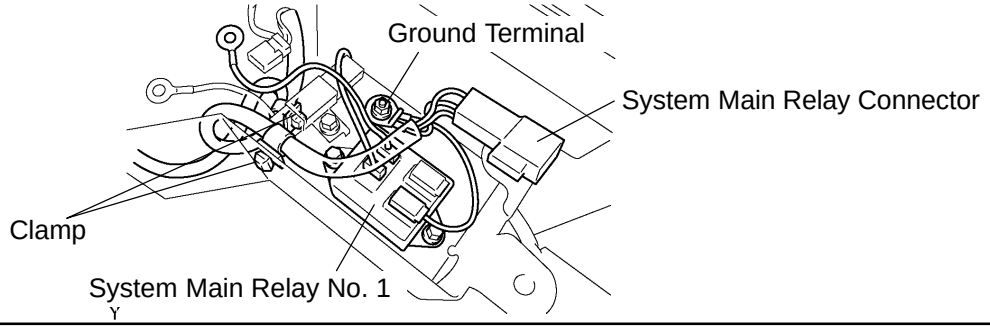

22. INSTALL SYSTEM MAIN RELAY NO.1

NOTICE:

Wear insulating gloves.

(a) Install the system main relay No. 1 with the 2 bolts.
Torque: 3.4 N·m (35 kgf·cm, 30 in.·lbf)

(b) Connect the system main relay connector.

(c) Connect the 2 clamps, then install the system main relay sub wiring harness to the upper battery carrier.

(d) Install the ground terminal with the nut.
Torque: 5.6 N·m (57 kgf·cm, 50 in.·lbf)

(e) Install the connector.

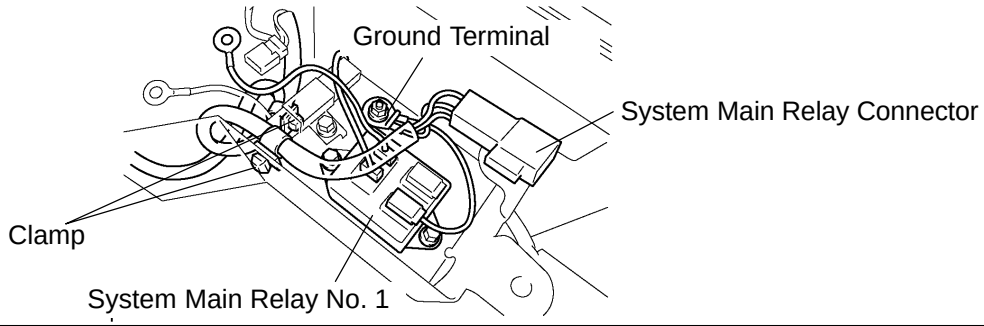

23. INSTALL SYSTEM MAIN RELAY NO.3 (See page 21–90)

NOTICE:

Wear insulating gloves.

cardiagn.com

24. INSTALL SYSTEM MAIN RELAY NO.2 (See page 21–87)
NOTICE:
Wear insulating gloves.

25. INSPECT CONTACT CONDITION
NOTICE:
Wear insulating gloves.
(a) Check that all the wiring wire harnesses are correctly and securely connected on the upper battery carrier.

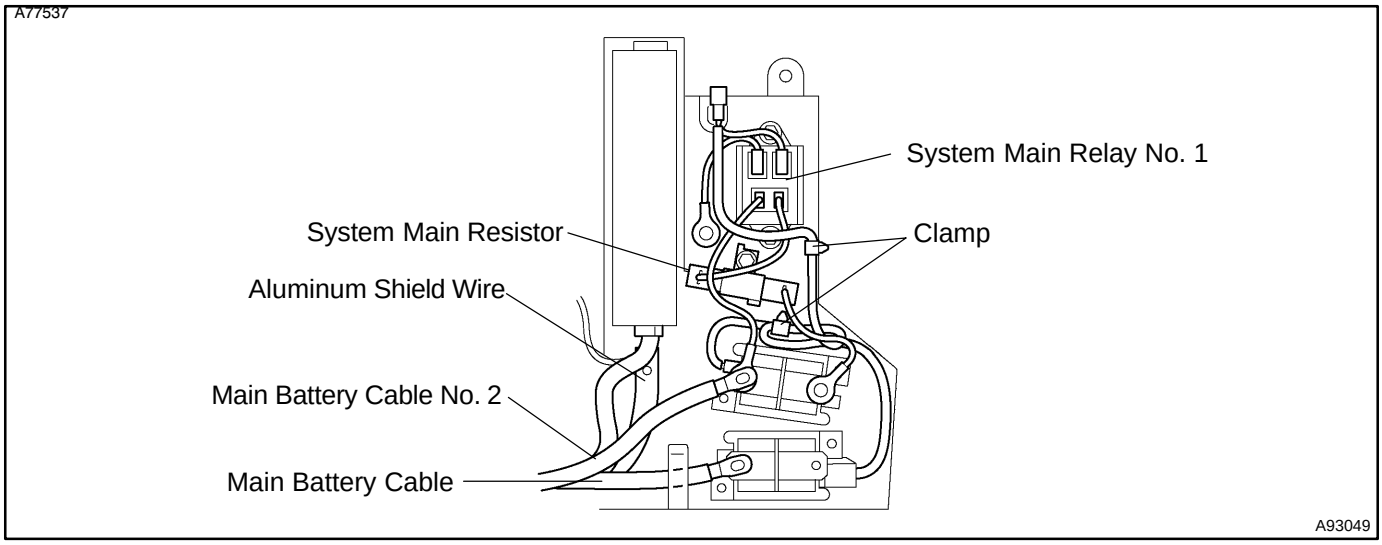

NOTICE:
Make sure that the connectors and clamps are connected exactly the same as the illustration above. If any of them is different, correct it immediately.

26. INSTALL FRAME WIRE (See page 21–54)
NOTICE:
Wear insulating gloves.
27. INSTALL JUNCTION TERMINAL (See page 21–54)
NOTICE:
Wear insulating gloves.
28. INSTALL BATTERY CARRIER PANEL NO.6 (See page 21–54)
29. INSTALL BATTERY CARRIER BRACKET (See page 21–54)
30. INSTALL DECK TRIM SIDE PANEL ASSY LH
31. INSTALL DECK FLOOR BOX LH
32. INSTALL REAR FLOOR BOARD NO.4
33. INSTALL REAR SIDE SEAT BACK FRAME LH
34. INSTALL REAR FLOOR BOARD NO.1
35. INSTALL REAR SEAT CUSHION ASSY
36. INSTALL TONNEAU COVER ASSY
37. INSTALL DECK TRIM COVER REAR
38. INSTALL SERVICE PLUG GRIP (See page 21–116)
NOTICE:
Wear insulating gloves.
39. CONNECT BATTERY NEGATIVE TERMINAL
Torque: 6.0 N·m (61 kgf·cm, 53 in.·lbf)

cardiagn.com

40. INSTALL REAR FLOOR BOARD NO.3
41. INSTALL DECK FLOOR BOX REAR
42. INSTALL REAR FLOOR BOARD NO.2
43. POWER WINDOW CONTROL SYSTEM INITIALIZE (See page 01–28)

cardiagn.com

SYSTEM MAIN RELAY NO.2

2103U–01

REPLACEMENT

NOTICE:

- **When working on the high voltage systems, always wear insulating gloves.**
- **After removing the service plug grip, do not operate the power switch as it may damage the hybrid vehicle control ECU.**
- **Keep the removed service plug in your pocket to prevent other technicians from reconnecting it while you are servicing the vehicle.**
- **After removing the service plug grip, do not touch the high voltage connectors and terminals for 5 minutes.**

1. **PRECAUTION (See page 21–7)**
2. **REMOVE REAR FLOOR BOARD NO.2 (See page 21–116)**
3. **REMOVE DECK FLOOR BOX REAR (See page 21–116)**
4. **REMOVE REAR FLOOR BOARD NO.3 (See page 21–116)**
5. **DISCONNECT BATTERY NEGATIVE TERMINAL (See page 21–116)**
6. **REMOVE SERVICE PLUG GRIP (See page 21–116)**
7. **REMOVE DECK TRIM COVER REAR (See page 21–54)**
8. **REMOVE TONNEAU COVER ASSY (See page 21–54)**
9. **REMOVE REAR SEAT CUSHION ASSY (See page 21–54)**
10. **REMOVE REAR FLOOR BOARD NO.1 (See page 21–54)**
11. **REMOVE REAR SIDE SEAT BACK FRAME LH (See page 21–54)**
12. **REMOVE REAR FLOOR BOARD NO.4 (See page 21–54)**
13. **REMOVE DECK FLOOR BOX LH (See page 21–54)**
14. **REMOVE DECK TRIM SIDE PANEL ASSY LH (See page 21–54)**
15. **REMOVE BATTERY CARRIER BRACKET (See page 21–54)**
16. **REMOVE BATTERY CARRIER PANEL NO.6 (See page 21–54)**
17. **REMOVE JUNCTION TERMINAL (See page 21–54)**

NOTICE:

Wear insulating gloves.

18. **SEPARATE FRAME WIRE (See page 21–54)**

NOTICE:

- **Wear insulating gloves.**
- **Insulate the removed terminals with insulating tape.**

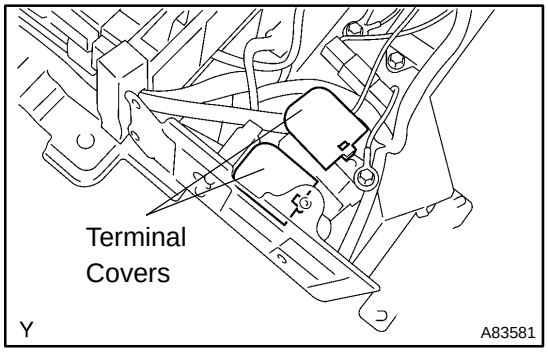

19. **REMOVE SYSTEM MAIN RELAY NO.2**

NOTICE:

Wear insulating gloves.

(a) Remove the 2 terminal covers.

cardiagn.com

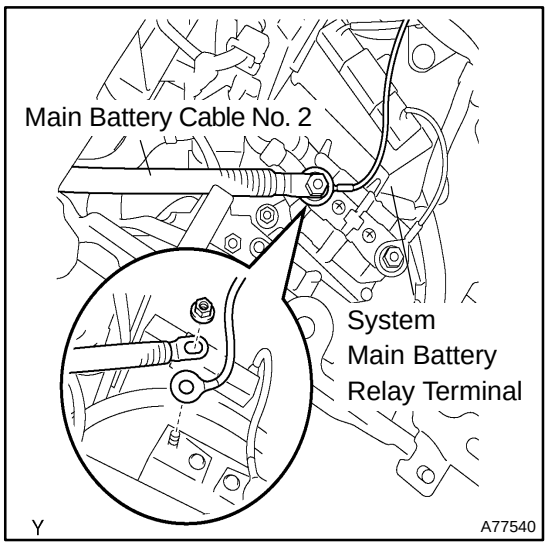

(b) Remove the nut, then disconnect the system main battery relay terminal and main battery cable No. 2.

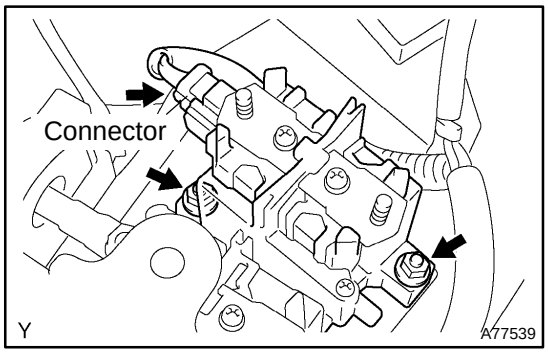

(c) Disconnect the connector.
(d) Remove the 2 nuts and system main relay No. 2.

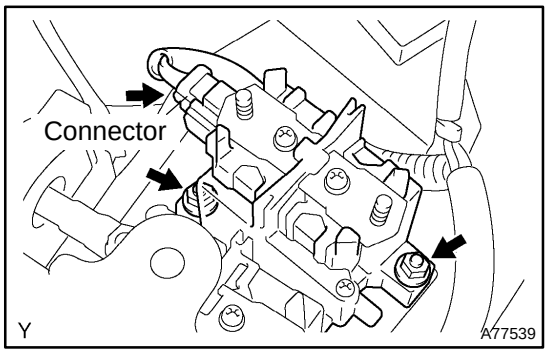

20. INSTALL SYSTEM MAIN RELAY NO.2

NOTICE:

Wear insulating gloves.

(a) Install the system main relay No. 2 with the 2 nuts.
Torque: 3.4 N·m (35 kgf·cm, 30 in.·lbf)

(b) Connect the connector.

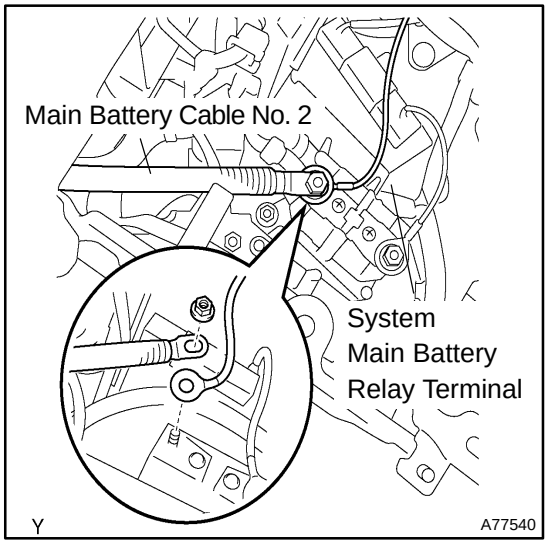

(c) Temporarily fasten the system main relay terminal and main battery cable No. 2 terminal, in that order, and tighten a new nut.
Torque: 5.6 N·m (57 kgf·cm, 50 in.·lbf)

cardiagn.com

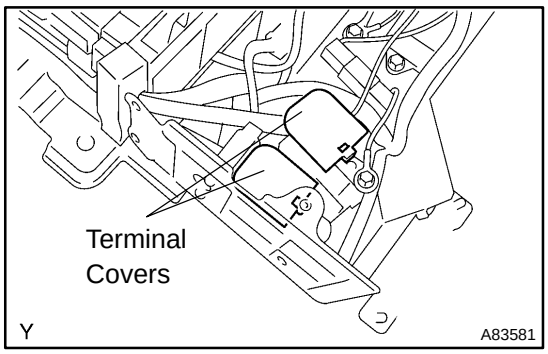

(d) Install the 2 terminal covers.

21. INSPECT CONTACT CONDITION (See page 21–83)
NOTICE:
Wear insulating gloves.
22. INSTALL FRAME WIRE (See page 21–54)
NOTICE:
Wear insulating gloves.
23. INSTALL JUNCTION TERMINAL (See page 21–54)
NOTICE:
Wear insulating gloves.
24. INSTALL BATTERY CARRIER PANEL NO.6 (See page 21–54)
25. INSTALL BATTERY CARRIER BRACKET (See page 21–54)
26. INSTALL DECK TRIM SIDE PANEL ASSY LH
27. INSTALL DECK FLOOR BOX LH
28. INSTALL REAR FLOOR BOARD NO.4
29. INSTALL REAR SIDE SEAT BACK FRAME LH
30. INSTALL REAR FLOOR BOARD NO.1
31. INSTALL REAR SEAT CUSHION ASSY
32. INSTALL TONNEAU COVER ASSY
33. INSTALL DECK TRIM COVER REAR
34. INSTALL SERVICE PLUG GRIP (See page 21–116)
NOTICE:
Wear insulating gloves.
35. CONNECT BATTERY NEGATIVE TERMINAL
Torque: 6.0 N·m (61 kgf·cm, 53 in.·lbf)
36. INSTALL REAR FLOOR BOARD NO.3
37. INSTALL DECK FLOOR BOX REAR
38. INSTALL REAR FLOOR BOARD NO.2
39. POWER WINDOW CONTROL SYSTEM INITIALIZE (See page 01–28)

cardiagn.com

SYSTEM MAIN RELAY NO.3

2103V–01

REPLACEMENT

NOTICE:

- **When working on the high voltage systems, always wear insulating gloves.**
- **After removing the service plug grip, do not operate the power switch as it may damage the hybrid vehicle control ECU.**
- **Keep the removed service plug in your pocket to prevent other technicians from reconnecting it while you are servicing the vehicle.**
- **After removing the service plug grip, do not touch the high voltage connectors and terminals for 5 minutes.**

1. PRECAUTION (See page 21–7)
2. REMOVE REAR FLOOR BOARD NO.2 (See page 21–116)
3. REMOVE DECK FLOOR BOX REAR (See page 21–116)
4. REMOVE REAR FLOOR BOARD NO.3 (See page 21–116)
5. DISCONNECT BATTERY NEGATIVE TERMINAL (See page 21–116)
6. REMOVE SERVICE PLUG GRIP (See page 21–116)
7. REMOVE DECK TRIM COVER REAR (See page 21–54)
8. REMOVE TONNEAU COVER ASSY (See page 21–54)
9. REMOVE REAR SEAT CUSHION ASSY (See page 21–54)
10. REMOVE REAR FLOOR BOARD NO.1 (See page 21–54)
11. REMOVE REAR SIDE SEAT BACK FRAME LH (See page 21–54)
12. REMOVE REAR FLOOR BOARD NO.4 (See page 21–54)
13. REMOVE DECK FLOOR BOX LH (See page 21–54)
14. REMOVE DECK TRIM SIDE PANEL ASSY LH (See page 21–54)
15. REMOVE BATTERY CARRIER BRACKET (See page 21–54)
16. REMOVE BATTERY CARRIER PANEL NO.6 (See page 21–54)
17. REMOVE JUNCTION TERMINAL (See page 21–54)

NOTICE:
Wear insulating gloves.

18. SEPARATE FRAME WIRE (See page 21–54)

NOTICE:
Wear insulating gloves.

19. REMOVE SYSTEM MAIN RELAY NO.2 (See page 21–87)

NOTICE:
Wear insulating gloves.

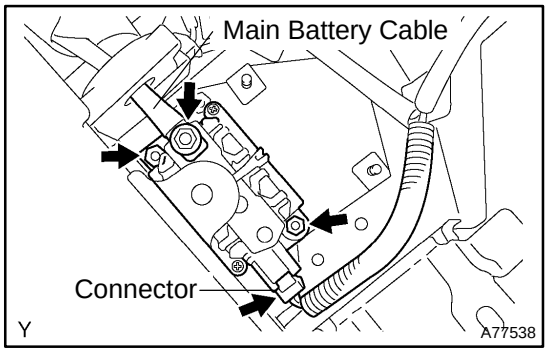

20. REMOVE SYSTEM MAIN RELAY NO.3

NOTICE:
Wear insulating gloves.

(a) Remove the nut, then disconnect the main battery cable.
(b) Remove the 2 nuts, then disconnect the system main relay No. 3.
(c) Remove the connector and system main relay No. 3.

cardiagn.com

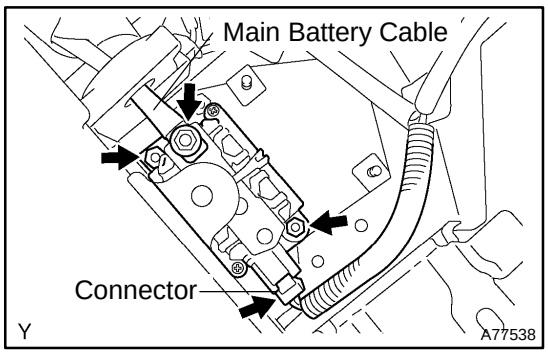

21. INSTALL SYSTEM MAIN RELAY NO.3

NOTICE:

Wear insulating gloves.

(a) Connect the connector, then temporarily fasten the system main relay No. 3.

(b) Install the system main relay No. 3 with 2 new nuts.
Torque: 3.4 N·m (35 kgf·cm, 30 in.·lbf)

(c) Install the main battery cable with the nut.
Torque: 5.6 N·m (57 kgf·cm, 50 in.·lbf)

22. INSTALL SYSTEM MAIN RELAY NO.2 (See page 21–87)

NOTICE:

Wear insulating gloves.

23. INSPECT CONTACT CONDITION (See page 21–83)

NOTICE:

Wear insulating gloves.

24. INSTALL FRAME WIRE (See page 21–54)

NOTICE:

Wear insulating gloves.

25. INSTALL JUNCTION TERMINAL (See page 21–54)

NOTICE:

Wear insulating gloves.

26. INSTALL BATTERY CARRIER PANEL NO.6 (See page 21–54)

27. INSTALL BATTERY CARRIER BRACKET (See page 21–54)

28. INSTALL DECK TRIM SIDE PANEL ASSY LH

29. INSTALL DECK FLOOR BOX LH

30. INSTALL REAR FLOOR BOARD NO.4

31. INSTALL REAR SIDE SEAT BACK FRAME LH

32. INSTALL REAR FLOOR BOARD NO.1

33. INSTALL REAR SEAT CUSHION ASSY

34. INSTALL TONNEAU COVER ASSY

35. INSTALL DECK TRIM COVER REAR

36. INSTALL SERVICE PLUG GRIP (See page 21–116)

NOTICE:

Wear insulating gloves.

37. CONNECT BATTERY NEGATIVE TERMINAL
Torque: 6.0 N·m (61 kgf·cm, 53 in.·lbf)

38. INSTALL REAR FLOOR BOARD NO.3

39. INSTALL DECK FLOOR BOX REAR

40. INSTALL REAR FLOOR BOARD NO.2

41. POWER WINDOW CONTROL SYSTEM INITIALIZE (See page 01–28)

cardiagn.com

SYSTEM MAIN RESISTOR

2103W–01

REPLACEMENT

NOTICE:

- **When working on the high voltage systems, always wear insulating gloves.**
- **After removing the service plug grip, do not operate the power switch as it may damage the hybrid vehicle control ECU.**
- **Keep the removed service plug in your pocket to prevent other technicians from reconnecting it while you are servicing the vehicle.**
- **After removing the service plug grip, do not touch the high voltage connectors and terminals for 5 minutes.**

1. **PRECAUTION (See page 21–7)**
2. **REMOVE REAR FLOOR BOARD NO.2 (See page 21–116)**
3. **REMOVE DECK FLOOR BOX REAR (See page 21–116)**
4. **REMOVE REAR FLOOR BOARD NO.3 (See page 21–116)**
5. **DISCONNECT BATTERY NEGATIVE TERMINAL (See page 21–116)**
6. **REMOVE SERVICE PLUG GRIP (See page 21–116)**
7. **REMOVE DECK TRIM COVER REAR (See page 21–54)**
8. **REMOVE TONNEAU COVER ASSY (See page 21–54)**
9. **REMOVE REAR SEAT CUSHION ASSY (See page 21–54)**
10. **REMOVE REAR FLOOR BOARD NO.1 (See page 21–54)**
11. **REMOVE REAR SIDE SEAT BACK FRAME LH (See page 21–54)**
12. **REMOVE REAR FLOOR BOARD NO.4 (See page 21–54)**
13. **REMOVE DECK FLOOR BOX LH (See page 21–54)**
14. **REMOVE DECK TRIM SIDE PANEL ASSY LH (See page 21–54)**
15. **REMOVE BATTERY CARRIER BRACKET (See page 21–54)**
16. **REMOVE BATTERY CARRIER PANEL NO.6 (See page 21–54)**
17. **REMOVE JUNCTION TERMINAL (See page 21–54)**

NOTICE:

Wear insulating gloves.

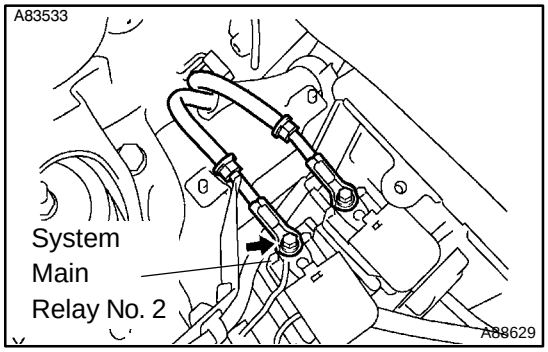

18. **SEPARATE FRAME WIRE**

NOTICE:

- **Wear insulating gloves.**
- **Insulate the removed terminals with insulating tape.**

(a) Remove the nut, then disconnect the frame wire from the system main relay No. 2.

cardiagn.com

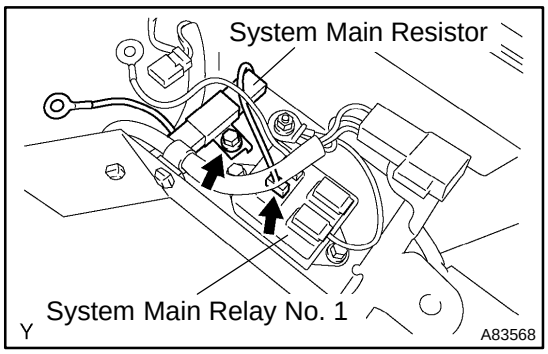

19. REMOVE SYSTEM MAIN RESISTOR

NOTICE:

Wear insulating gloves.

(a) Disconnect the connector from the system main relay No. 1.

(b) Remove the bolt and system main resistor.

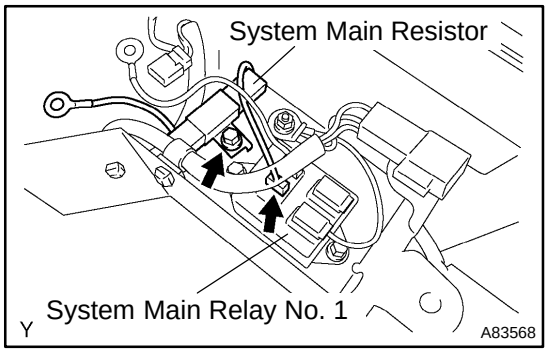

20. INSTALL SYSTEM MAIN RESISTOR

NOTICE:

Wear insulating gloves.

(a) Install the system main resistor with the bolt.
Torque: 3.4 N·m (35 kgf·cm, 30 in.·lbf)

(b) Install the connector to the system main relay No. 1.

21. INSPECT CONTACT CONDITION (See page 21–83)

NOTICE:

Wear insulating gloves.

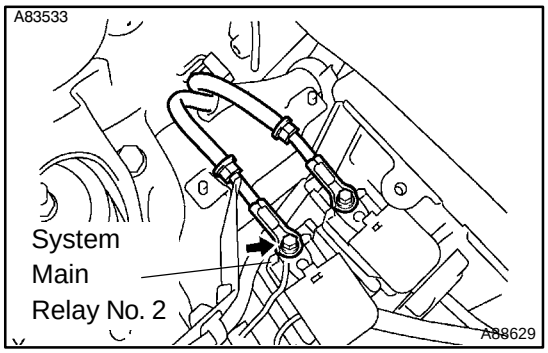

22. INSTALL FRAME WIRE

NOTICE:

Wear insulating gloves.

(a) Temporarily fasten the system main resistor terminal and frame wire, in that order, and tighten a new nut.
Torque: 5.6 N·m (57 kgf·cm, 50 in.·lbf)

23. INSTALL JUNCTION TERMINAL (See page 21–54)

NOTICE:

Wear insulating gloves.

24. INSTALL BATTERY CARRIER PANEL NO.6 (See page 21–54)

25. INSTALL BATTERY CARRIER BRACKET (See page 21–54)

26. INSTALL DECK TRIM SIDE PANEL ASSY LH

27. INSTALL DECK FLOOR BOX LH

28. INSTALL REAR FLOOR BOARD NO.4

29. INSTALL REAR SIDE SEAT BACK FRAME LH

30. INSTALL REAR FLOOR BOARD NO.1

31. INSTALL REAR SEAT CUSHION ASSY

32. INSTALL TONNEAU COVER ASSY

cardiagn.com

33. INSTALL DECK TRIM COVER REAR

34. INSTALL SERVICE PLUG GRIP (See page 21–116)

NOTICE:

Wear insulating gloves.

35. CONNECT BATTERY NEGATIVE TERMINAL

Torque: 6.0 N·m (61 kgf·cm, 53 in.·lbf)

36. INSTALL REAR FLOOR BOARD NO.3

37. INSTALL DECK FLOOR BOX REAR

38. INSTALL REAR FLOOR BOARD NO.2

39. POWER WINDOW CONTROL SYSTEM INITIALIZE (See page 01–28)

cardiagn.com

BATTERY CURRENT SENSOR

2103X–01

REPLACEMENT

NOTICE:

- **When working on the high voltage systems, always wear insulating gloves.**
- **After removing the service plug grip, do not operate the power switch as it may damage the hybrid vehicle control ECU.**
- **Keep the removed service plug in your pocket to prevent other technicians from reconnecting it while you are servicing the vehicle.**
- **After removing the service plug grip, do not touch the high voltage connectors and terminals for 5 minutes.**

1. **PRECAUTION (See page 21–7)**
2. **REMOVE REAR FLOOR BOARD NO.2 (See page 21–116)**
3. **REMOVE DECK FLOOR BOX REAR (See page 21–116)**
4. **REMOVE REAR FLOOR BOARD NO.3 (See page 21–116)**
5. **DISCONNECT BATTERY NEGATIVE TERMINAL (See page 21–116)**
6. **REMOVE SERVICE PLUG GRIP (See page 21–116)**
7. **REMOVE DECK TRIM COVER REAR (See page 21–54)**
8. **REMOVE TONNEAU COVER ASSY (See page 21–54)**
9. **REMOVE REAR SEAT CUSHION ASSY (See page 21–54)**
10. **REMOVE REAR FLOOR BOARD NO.1 (See page 21–54)**
11. **REMOVE REAR SIDE SEAT BACK FRAME LH (See page 21–54)**
12. **REMOVE REAR FLOOR BOARD NO.4 (See page 21–54)**
13. **REMOVE DECK FLOOR BOX LH (See page 21–54)**
14. **REMOVE DECK TRIM SIDE PANEL ASSY LH (See page 21–54)**
15. **REMOVE BATTERY CARRIER BRACKET (See page 21–54)**
16. **REMOVE BATTERY CARRIER PANEL NO.6 (See page 21–54)**

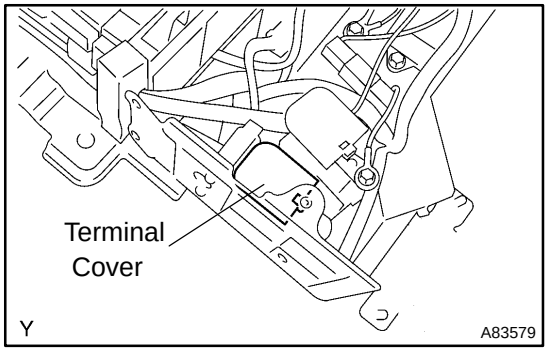

17. REMOVE BATTERY CURRENT SENSOR

NOTICE:

Wear insulating gloves.

(a) Remove the terminal cover.

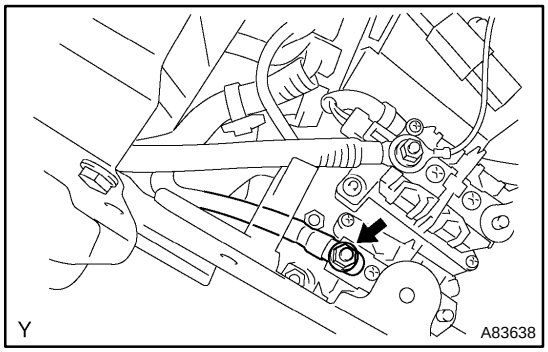

(b) Remove the nut, then disconnect the main battery cable.

cardiagn.com

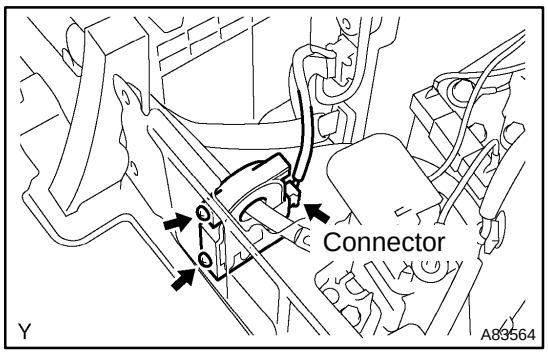

(c) Disconnect the connector.
(d) Remove the 2 screws and battery current sensor.

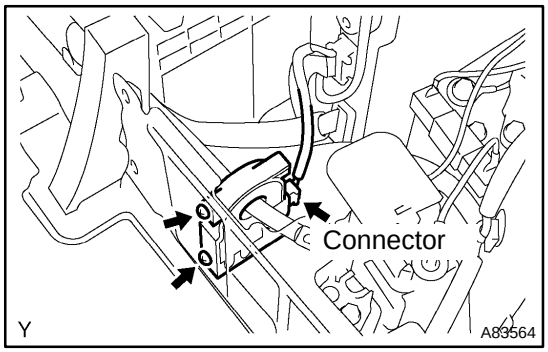

18. INSTALL BATTERY CURRENT SENSOR
NOTICE:
Wear insulating gloves.
(a) Install the battery current sensor with the 2 screws.
Torque: 1.4 N·m (14 kgf·cm, 12 in.·lbf)
(b) Connect the connector.

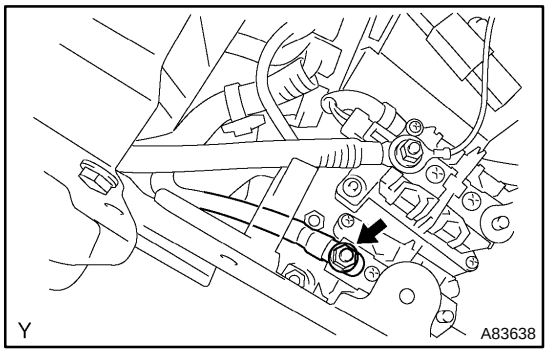

(c) Install the main battery cable with a new nut.
Torque: 5.6 N·m (57 kgf·cm, 50 in.·lbf)

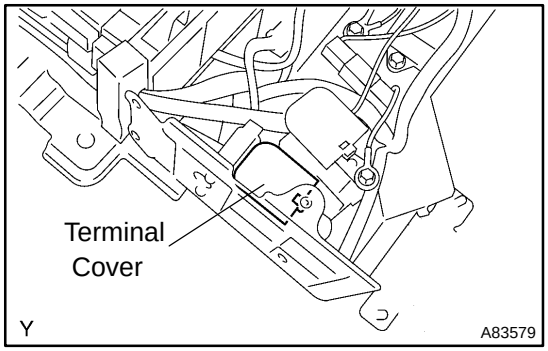

(d) Install the terminal cover.

19. INSTALL BATTERY CARRIER PANEL NO.6 (See page 21–54)
NOTICE:
Wear insulating gloves.
20. INSTALL BATTERY CARRIER BRACKET (See page 21–54)
21. INSTALL DECK TRIM SIDE PANEL ASSY LH
22. INSTALL DECK FLOOR BOX LH
23. INSTALL REAR FLOOR BOARD NO.4
24. INSTALL REAR SIDE SEAT BACK FRAME LH
25. INSTALL REAR FLOOR BOARD NO.1

cardiagn.com

26. INSTALL REAR SEAT CUSHION ASSY
27. INSTALL TONNEAU COVER ASSY
28. INSTALL DECK TRIM COVER REAR
29. INSTALL SERVICE PLUG GRIP (See page 21–116)

NOTICE:
Wear insulating gloves.

30. CONNECT BATTERY NEGATIVE TERMINAL
Torque: 6.0 N·m (61 kgf·cm, 53 in.·lbf)
31. INSTALL REAR FLOOR BOARD NO.3
32. INSTALL DECK FLOOR BOX REAR
33. INSTALL REAR FLOOR BOARD NO.2
34. POWER WINDOW CONTROL SYSTEM INITIALIZE (See page 01–28)

cardiagn.com

BATTERY ECU ASSY

2103Y–01

REPLACEMENT

NOTICE:

- **When working on the high voltage systems, always wear insulating gloves.**
- **After removing the service plug grip, do not operate the power switch as it may damage the hybrid vehicle control ECU.**
- **Keep the removed service plug in your pocket to prevent other technicians from reconnecting it while you are servicing the vehicle.**
- **After removing the service plug grip, do not touch the high voltage connectors and terminals for 5 minutes.**

1. PRECAUTION (See page 21–7)
2. REMOVE REAR FLOOR BOARD NO.2 (See page 21–116)
3. REMOVE DECK FLOOR BOX REAR (See page 21–116)
4. REMOVE REAR FLOOR BOARD NO.3 (See page 21–116)
5. DISCONNECT BATTERY NEGATIVE TERMINAL (See page 21–116)
6. REMOVE SERVICE PLUG GRIP (See page 21–116)
7. REMOVE DECK TRIM COVER REAR (See page 21–54)
8. REMOVE TONNEAU COVER ASSY (See page 21–54)
9. REMOVE REAR SEAT CUSHION ASSY (See page 21–54)
10. REMOVE REAR FLOOR BOARD NO.1 (See page 21–54)
11. REMOVE REAR SIDE SEAT BACK FRAME LH (See page 21–54)
12. REMOVE REAR FLOOR BOARD NO.4 (See page 21–54)
13. REMOVE DECK FLOOR BOX LH (See page 21–54)
14. REMOVE DECK TRIM SIDE PANEL ASSY LH (See page 21–54)
15. REMOVE BATTERY CARRIER BRACKET (See page 21–54)
16. REMOVE BATTERY CARRIER PANEL NO.6 (See page 21–54)

NOTICE:
Wear insulating gloves.

17. REMOVE JUNCTION TERMINAL (See page 21–54)

NOTICE:
Wear insulating gloves.

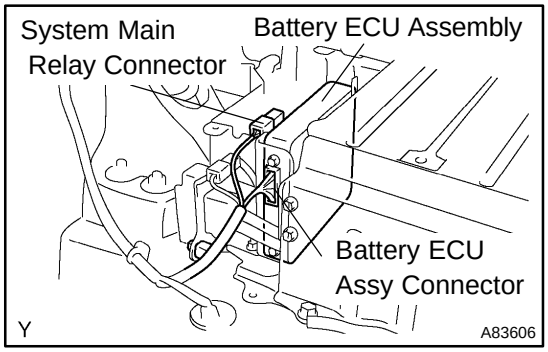

18. REMOVE BATTERY ECU ASSY

NOTICE:
Wear insulating gloves.

(a) Disconnect the system main relay connector.

NOTICE:
Insulate the disconnected connectors with insulating tape.

(b) Disconnect the battery ECU assembly connector.

NOTICE:
Insulate the disconnected connectors with insulating tape.

cardiagn.com

(c) Disconnect the thermistor connector.

NOTICE:

Insulate the disconnected connectors with insulating tape.

(d) Remove the clamp, then disconnect the frame wire No. 2 connector.

NOTICE:

Insulate the disconnected connectors with insulating tape.

(e) Remove the nut, then disconnect the aluminum shield wire of the main battery cable.

(f) Remove the 2 screws and battery ECU asssembly.

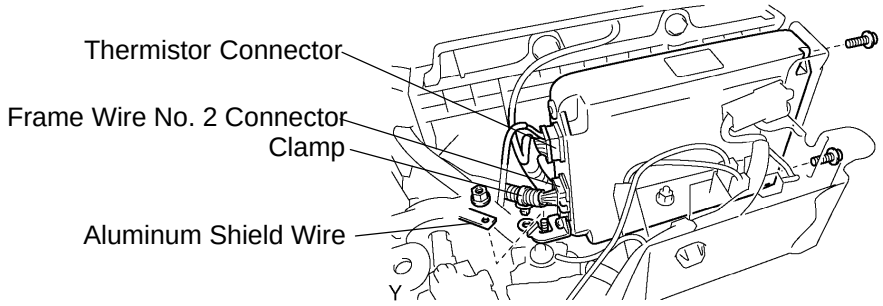

19. INSTALL BATTERY ECU ASSY

NOTICE:

Wear insulating gloves.

(a) Install the battery ECU assembly with the 2 screws.
Torque: 3.3 N·m (34 kgf·cm, 29 in.·lbf)

(b) Tighten the aluminum shield wire of the main battery cable together with the battery ECU assembly with a new nut.
Torque: 3.3 N·m (34 kgf·cm, 29 in.·lbf)

(c) Connect the clamp and frame wire No. 2 connector.

(d) Connect the thermister connector.

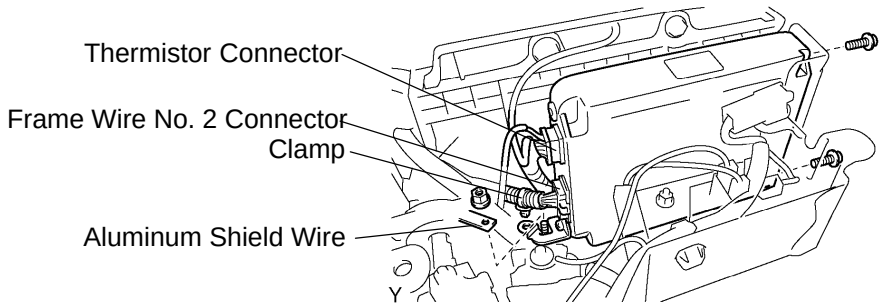

cardiagn.com

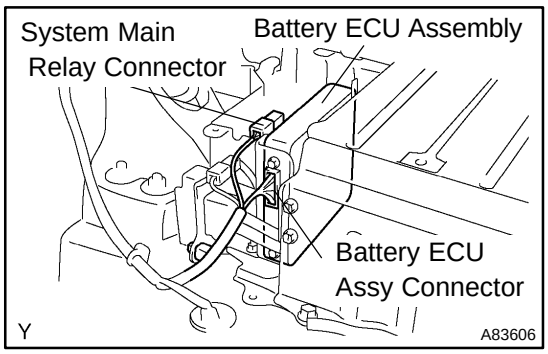

(e) Connect the system main relay connector.
(f) Remove the 2 screws and battery ECU assembly.

20. INSTALL JUNCTION TERMINAL (See page 21–54)
NOTICE:
Wear insulating gloves.
21. INSTALL BATTERY CARRIER PANEL NO.6 (See page 21–54)
NOTICE:
Wear insulating gloves.
22. INSTALL BATTERY CARRIER BRACKET (See page 21–54)
23. INSTALL DECK TRIM SIDE PANEL ASSY LH
24. INSTALL DECK FLOOR BOX LH
25. INSTALL REAR FLOOR BOARD NO.4
26. INSTALL REAR SIDE SEAT BACK FRAME LH
27. INSTALL REAR FLOOR BOARD NO.1
28. INSTALL REAR SEAT CUSHION ASSY
29. INSTALL TONNEAU COVER ASSY
30. INSTALL DECK TRIM COVER REAR
31. INSTALL SERVICE PLUG GRIP (See page 21–116)
NOTICE:
Wear insulating gloves.
32. CONNECT BATTERY NEGATIVE TERMINAL
Torque: 6.0 N·m (61 kgf·cm, 53 in.·lbf)
33. INSTALL REAR FLOOR BOARD NO.3
34. INSTALL DECK FLOOR BOX REAR
35. INSTALL REAR FLOOR BOARD NO.2
36. POWER WINDOW CONTROL SYSTEM INITIALIZE (See page 01–28)

cardiagn.com

FRAME WIRE

COMPONENTS

2103Z–01

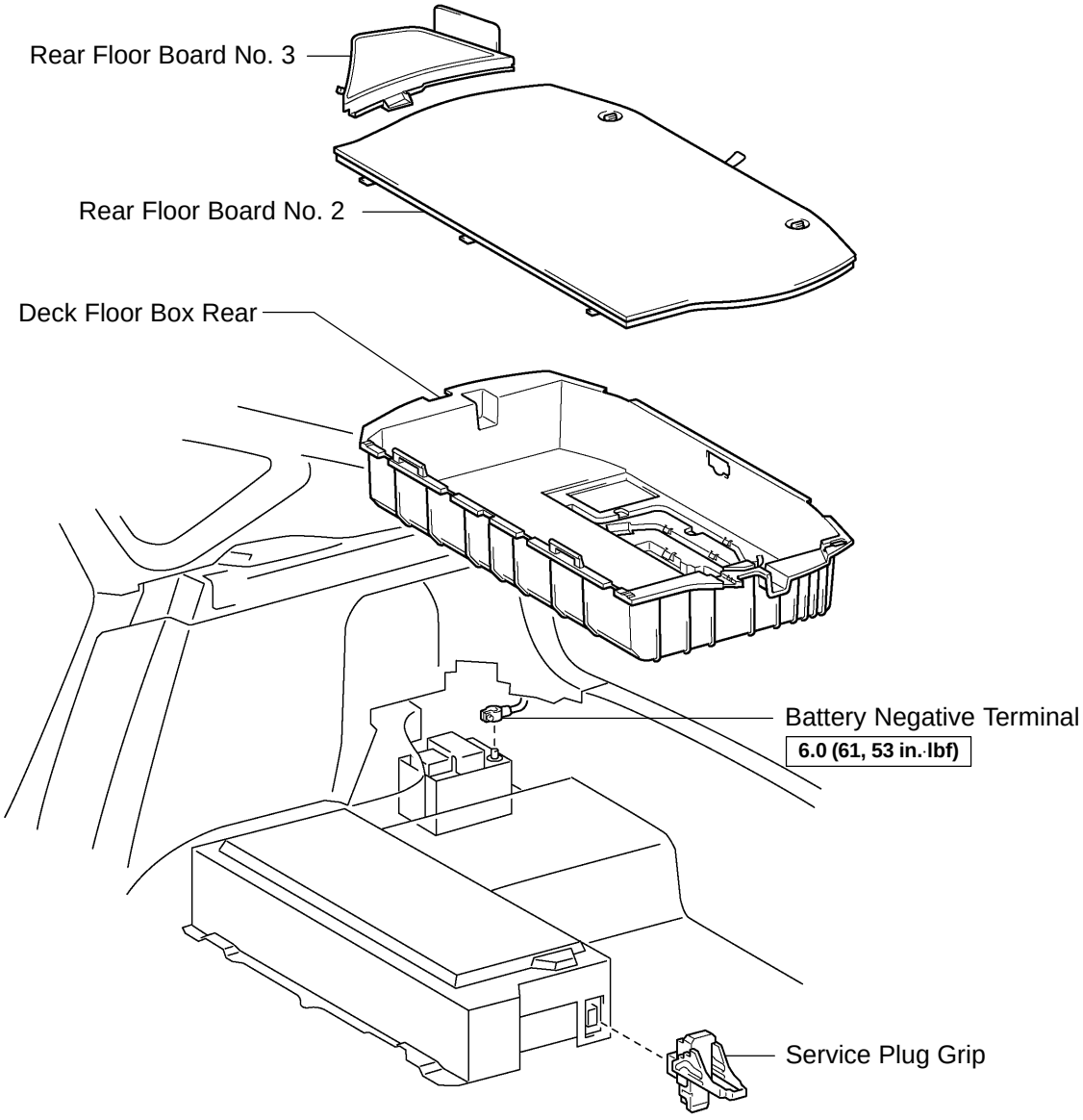

o N·m (kgf·cm, ft·lbf): Specified torque

A83616

cardiagn.com

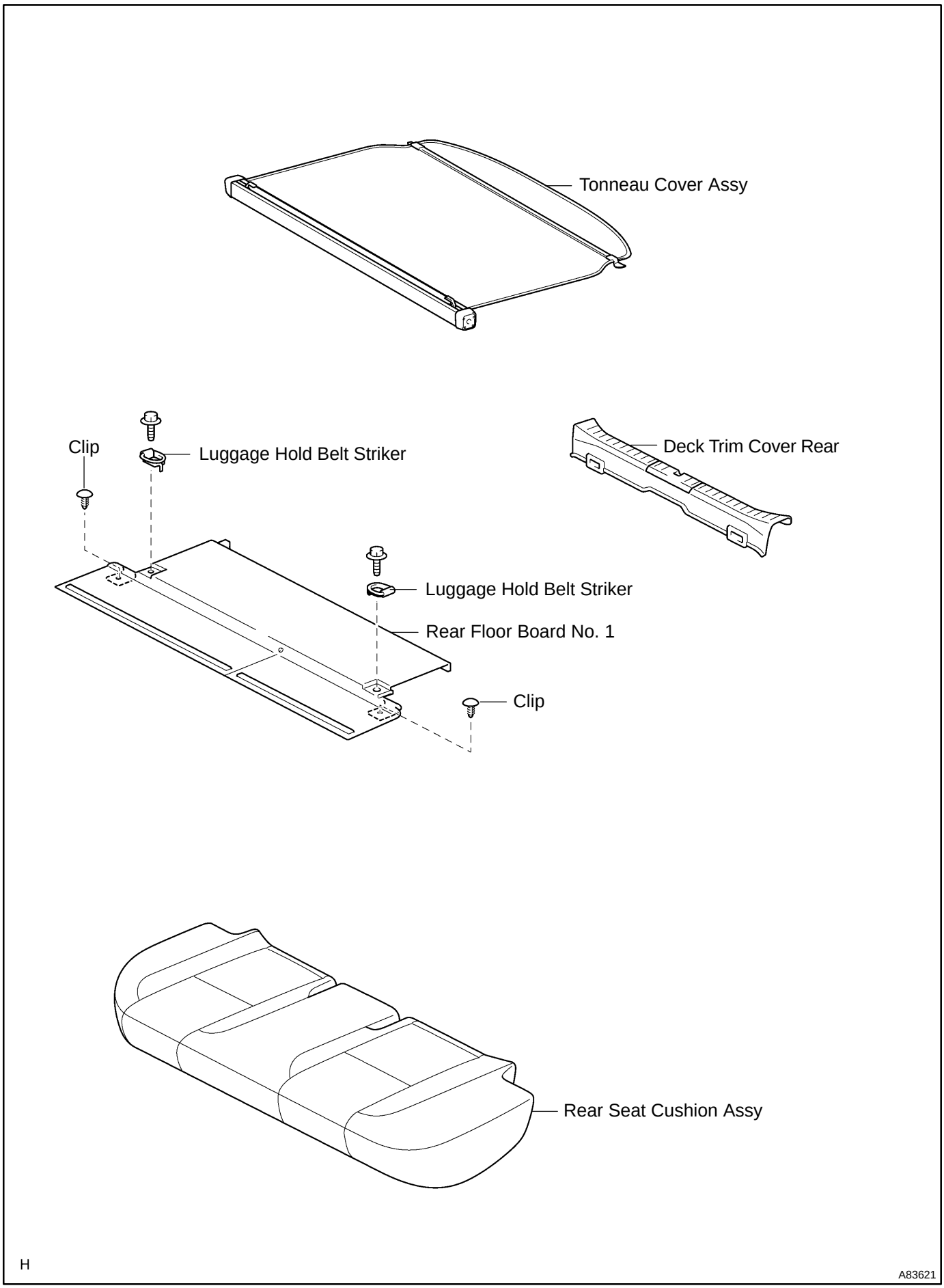

cardiagn.com

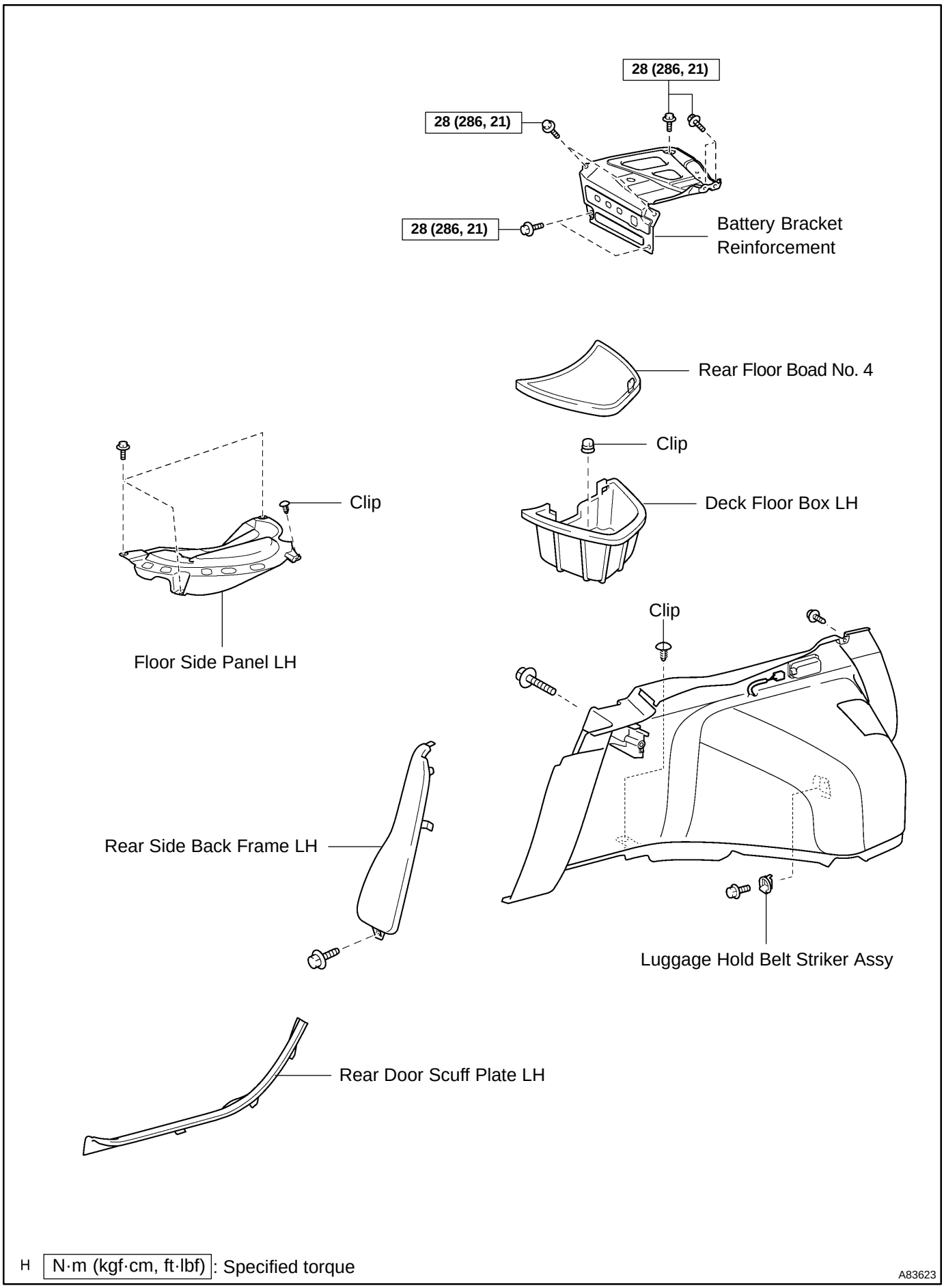

cardiagn.com

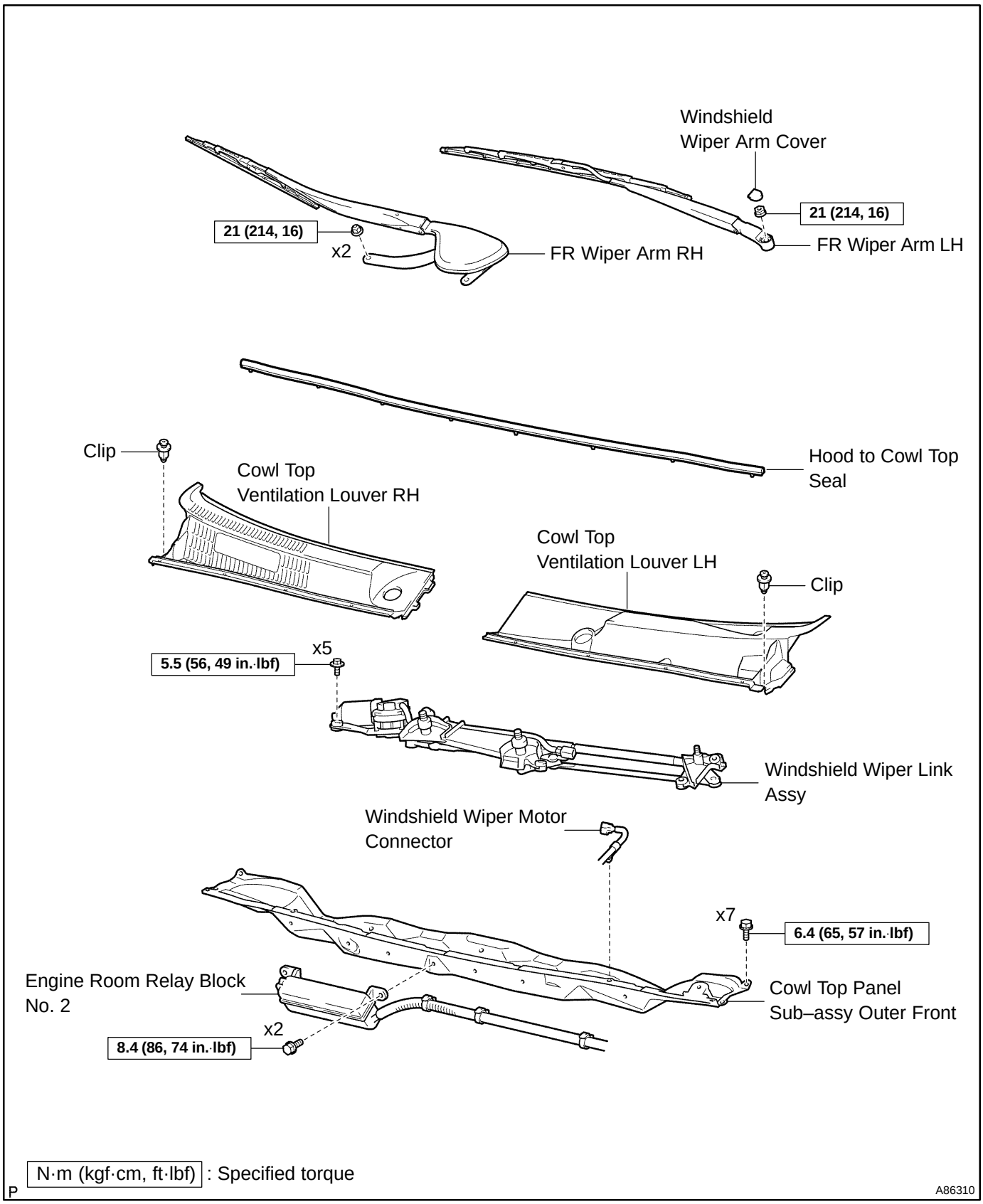

cardiagn.com

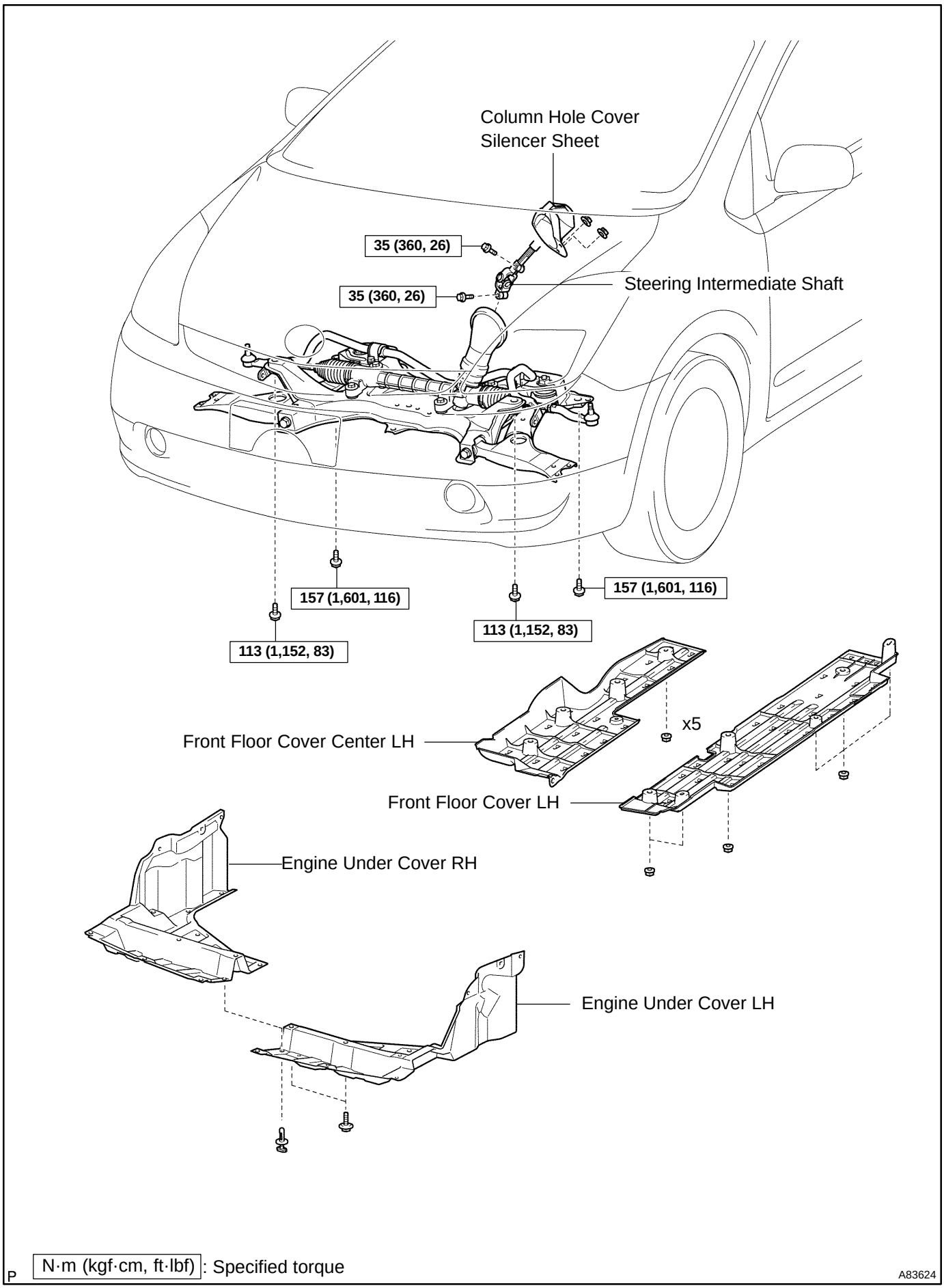

cardiagn.com

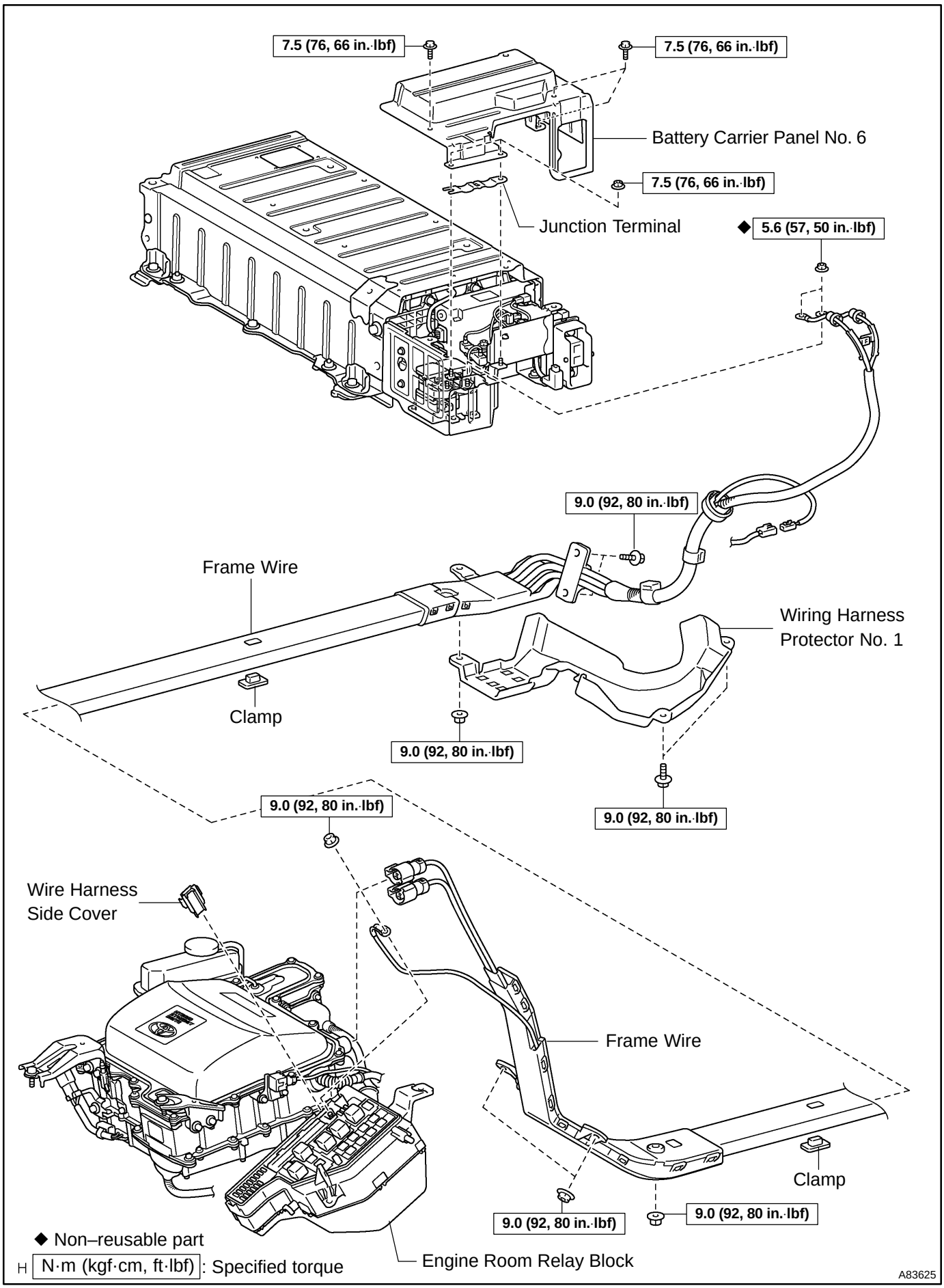

cardiagn.com

21040–01

REPLACEMENT

NOTICE:

- **When working on the high voltage systems, always wear insulating gloves.**
- **After removing the service plug grip, do not operate the power switch as it may damage the hybrid vehicle control ECU.**
- **Keep the removed service plug in your pocket to prevent other technicians from reconnecting it while you are servicing the vehicle.**
- **After removing the service plug grip, do not touch the high voltage connectors and terminals for 5 minutes.**

1. **PRECAUTION (See page 21–7)**
2. **REMOVE FRONT WHEELS**
3. **REMOVE REAR FLOOR BOARD NO.2 (See page 21–116)**
4. **REMOVE DECK FLOOR BOX REAR (See page 21–116)**
5. **REMOVE REAR FLOOR BOARD NO.3 (See page 21–116)**
6. **DISCONNECT BATTERY NEGATIVE TERMINAL (See page 21–116)**
7. **REMOVE SERVICE PLUG GRIP (See page 21–116)**
8. **REMOVE DECK TRIM COVER REAR (See page 21–54)**
9. **REMOVE TONNEAU COVER ASSY (See page 21–54)**
10. **REMOVE REAR SEAT CUSHION ASSY (See page 21–54)**
11. **REMOVE REAR FLOOR BOARD NO.1 (See page 21–54)**
12. **REMOVE REAR SIDE SEAT BACK FRAME LH (See page 21–54)**
13. **REMOVE REAR FLOOR BOARD NO.4 (See page 21–54)**
14. **REMOVE DECK FLOOR BOX LH (See page 21–54)**
15. **REMOVE DECK TRIM SIDE PANEL ASSY LH (See page 21–54)**
16. **REMOVE BATTERY CARRIER BRACKET (See page 21–54)**

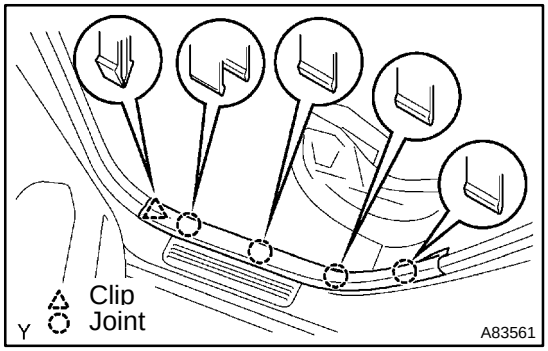

17. **REMOVE REAR DOOR SCUFF PLATE LH**

(a) Remove the clip and 4 joints shown in the illustration, then remove the rear door scuff plate.

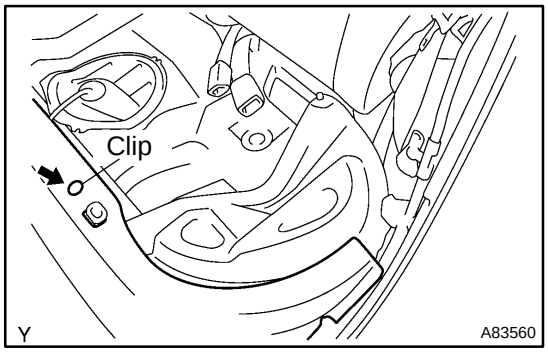

18. **REMOVE FLOOR SIDE PANEL LH**

(a) Remove the clip, then roll back the carpet.

cardiagn.com

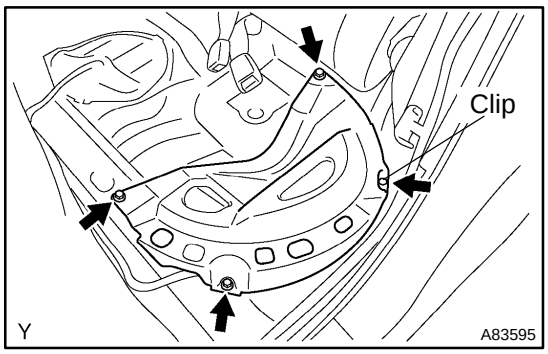

(b) Remove the clip from the floor side panel.
(c) Remove the 3 bolts and floor side panel.

19. REMOVE BATTERY CARRIER PANEL NO.6 (See page 21–54)
NOTICE:
Wear insulating gloves.
20. REMOVE JUNCTION TERMINAL (See page 21–54)
NOTICE:
Wear insulating gloves.

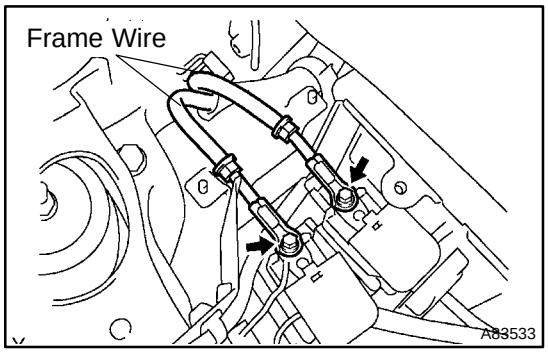

21. REMOVE FRAME WIRE (RR POSITION)
NOTICE:
Wear insulating gloves.
(a) Remove the 2 nuts, then remove the frame wire from the system main relay No. 2 and No. 3.
NOTICE:
Insulate the removed terminals with insulating tape.

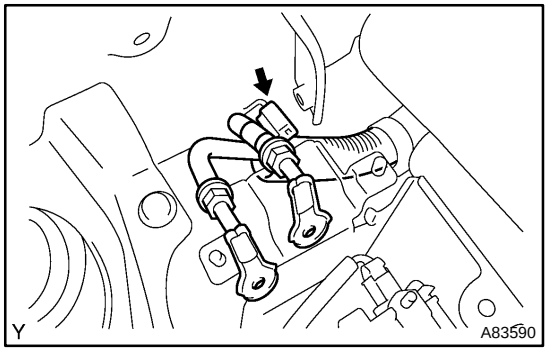

(b) Remove the clamps, then remove the frame wire from the rear floor.

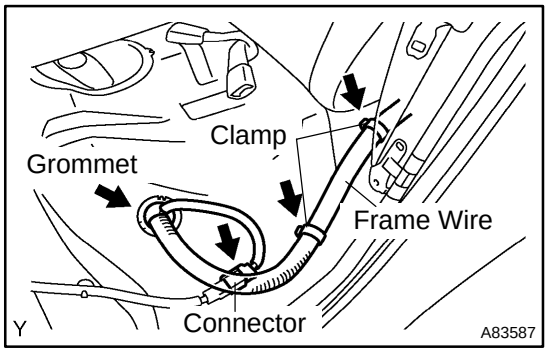

(c) Remove the 2 clamps, then disconnect the frame wire from the center floor panel.
(d) Disconnect the connector.
(e) Disconnect the grommet.

cardiagn.com

22. REMOVE FRONT WIPER ARM HEAD CAP (See page 66–14)
23. REMOVE FR WIPER ARM LH (See page 66–14)
24. REMOVE FR WIPER ARM RH (See page 66–14)
25. REMOVE HOOD TO COWL TOP SEAL (See page 66–14)
26. REMOVE COWL TOP VENTILATOR LOUVER LH (See page 66–14)
27. REMOVE COWL TOP VENTILATOR LOUVER RH (See page 66–14)
28. REMOVE WINDSHIELD WIPER LINK ASSY (See page 66–14)
29. REMOVE COWL TOP PANEL SUB–ASSY OUTER FRONT (See page 11–15)

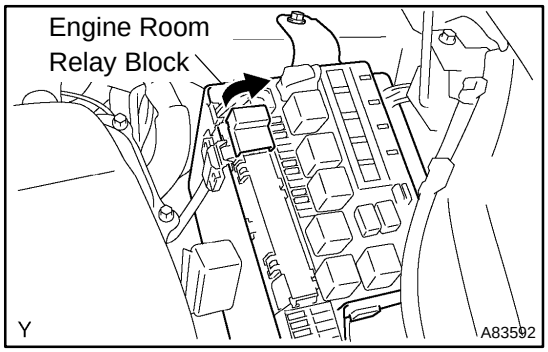

30. SEPARATE FRAME WIRE (FR POSITION)
NOTICE:
Wear insulating gloves.

(a) Flip open the cover of the jump start terminal on the engine room relay block.

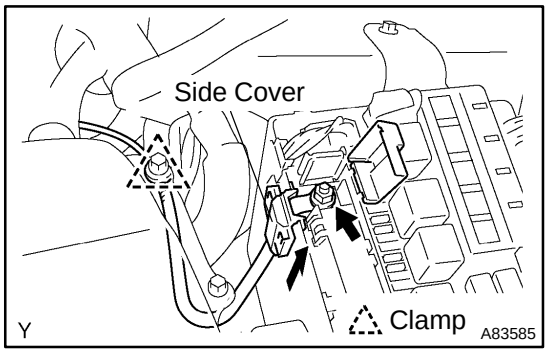

(b) Remove the side cover by sliding it upward.
(c) Remove the nut, then disconnect the frame wire from the engine room relay block.
(d) Disconnect the clamp, then disconnect the frame wire from the side member.

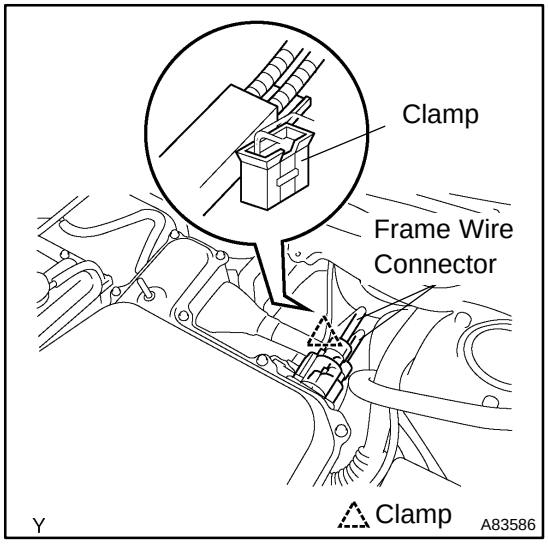

(e) Remove the 2 frame wire connectors shown in the illustration from the with converter inverter assembly.
(f) Disconnect the clamp, then disconnect the frame wire from the dash panel bracket.

31. REMOVE COLUMN HOLE COVER SILENCER SHEET (See page 14–32)
32. SEPARATE STEERING INTERMEDIATE SHAFT (See page 14–32)
33. REMOVE ENGINE UNDER COVER RH
34. REMOVE ENGINE UNDER COVER LH

cardiagn.com

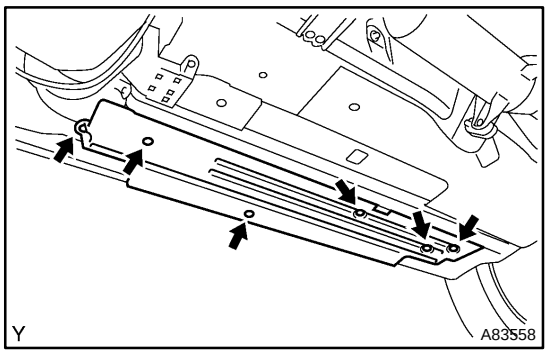

35. REMOVE FRONT FLOOR COVER LH

(a) Remove the 6 clips and front floor cover LH.

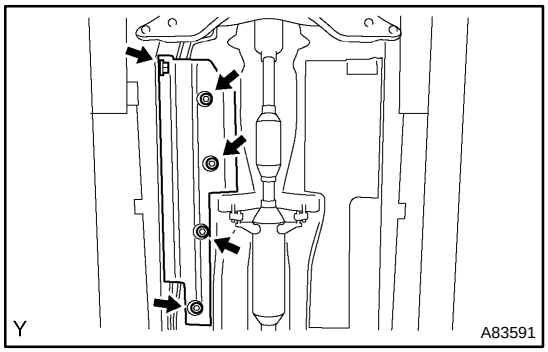

36. REMOVE FRONT FLOOR COVER CENTER LH

(a) Remove the 5 clips and front floor cover center LH.

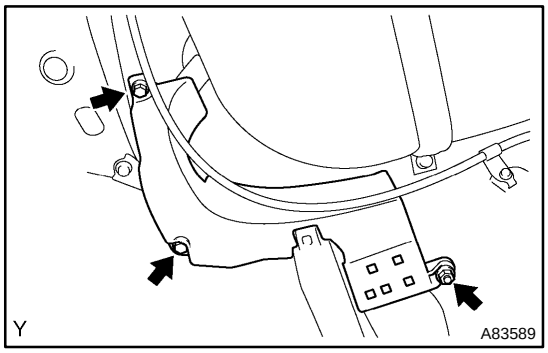

37. REMOVE WIRING HARNESS PROTECTOR NO.1

NOTICE:

Wear insulating gloves.

(a) Remove the 2 nuts, bolt and wiring harness protector No. 1.

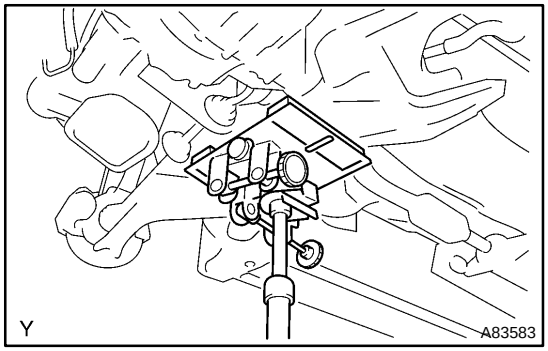

38. SEPARATE FRONT SUSPENSION CROSSMEMBER SUB–ASSY

(a) Support the front suspension cross member using a jack.

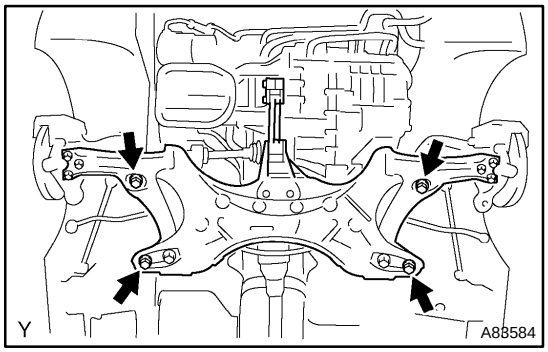

(b) Remove the 4 bolts shown in the illustration from the front suspension crossmember.

cardiagn.com

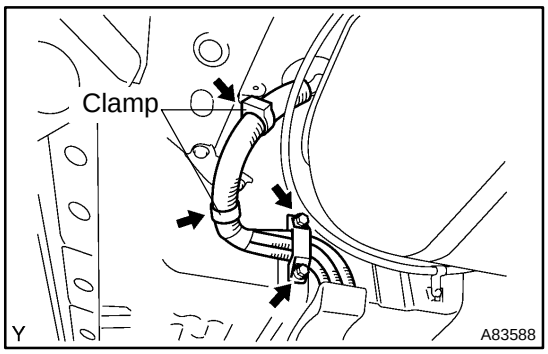

39. REMOVE FRAME WIRE

NOTICE:

Wear insulating gloves.

(a) Remove the 2 bolts shown in the illustration.

(b) Disconnect the 2 clamps.

(c) Lower the jack a little and remove both nuts A.

NOTICE:

- **Lower the jack slowly to avoid interfering with objects loaded on the front suspension crossmember.**
- **Do not remove the jack.**

(d) Remove both nuts B.

(e) Disconnect the fit in clamp, then remove the frame wire.

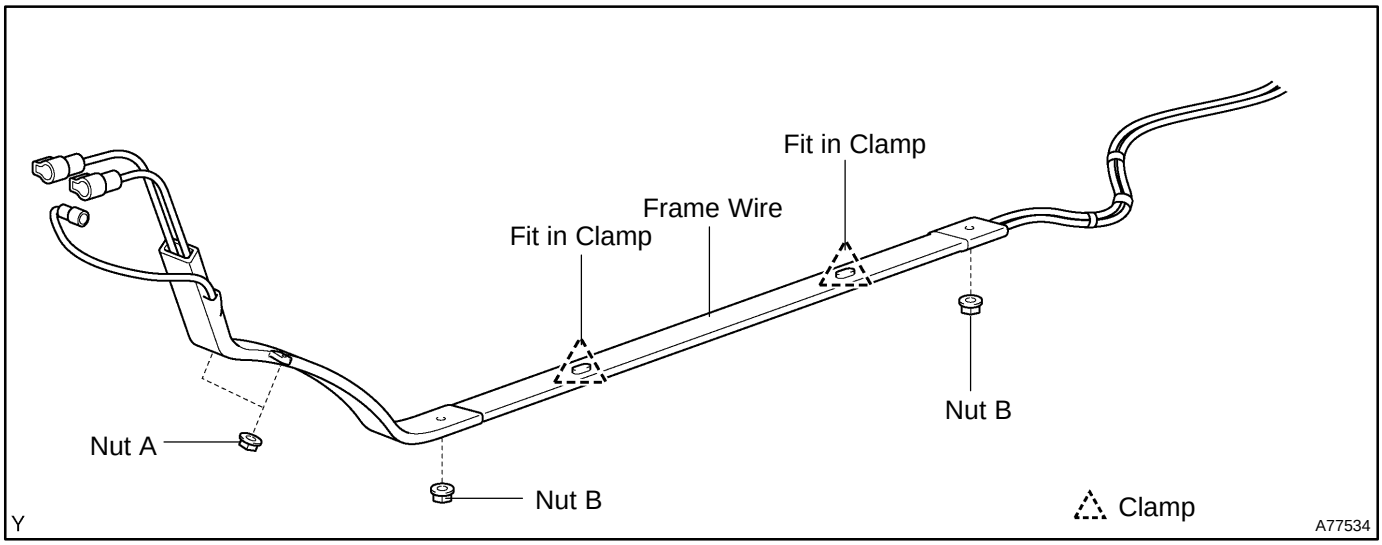

cardiagn.com

40. INSTALL FRAME WIRE

NOTICE:

Wear insulating gloves.

(a) Temporarily fasten the frame wire to the vehicle.

(b) Connect the fit in clamp to the stud in the floor panel, then install the frame wire with both nuts A.
Torque: 9.0 N·m (92 kgf·cm, 80 in.·lbf)

(c) Install both nuts B shown in the illustration.
Torque: 9.0 N·m (92 kgf·cm, 80 in.·lbf)

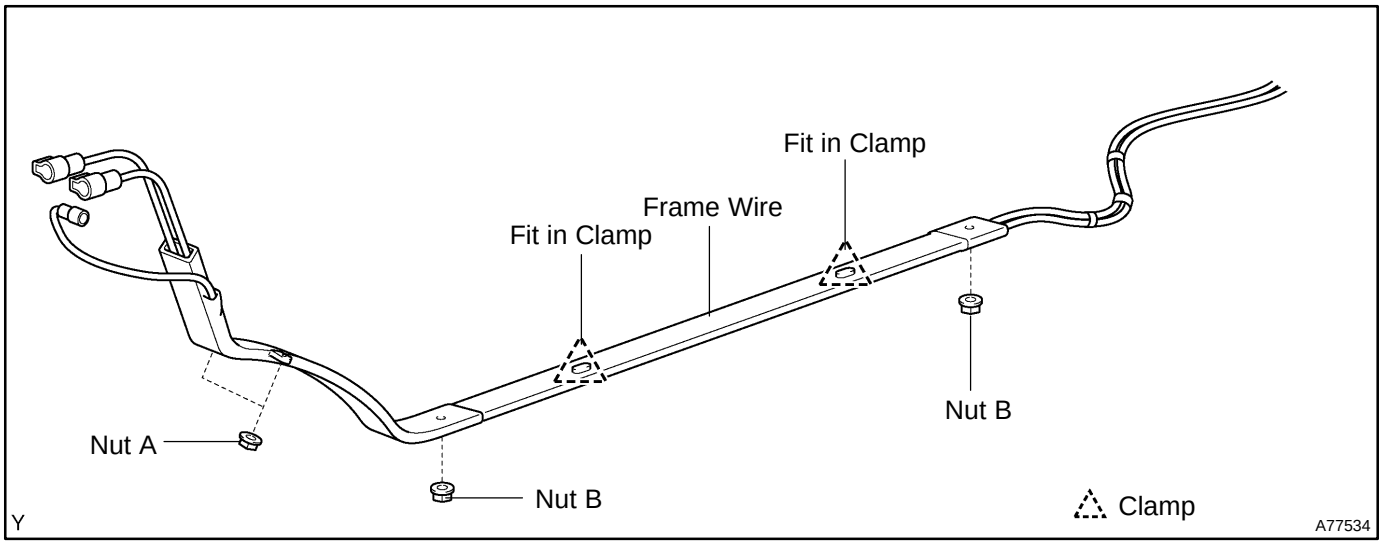

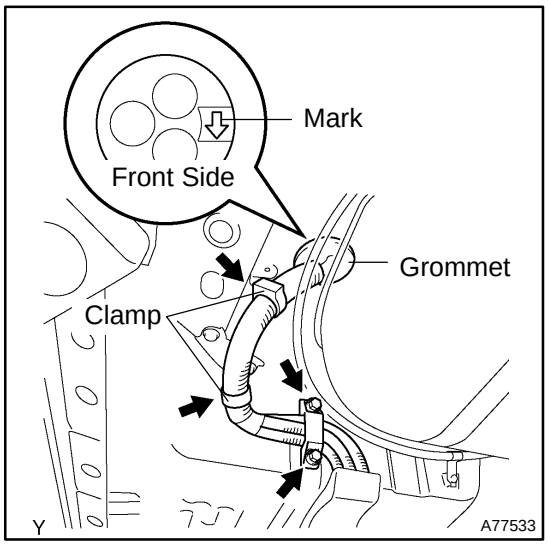

(d) As shown in the illustration, point the arrow on the grommet in the front direction, then install the grommet.

(e) Install the 2 bolts.
Torque: 9.0 N·m (92 kgf·cm, 80 in.·lbf)

(f) Install the 2 clamps.

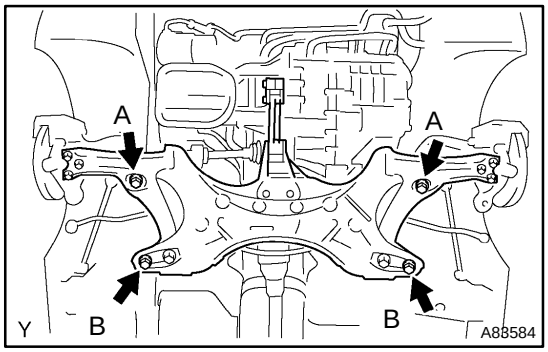

41. INSTALL FRONT SUSPENSION CROSSMEMBER SUB–ASSY

(a) Install the front suspension crossmember with the 4 bolts.
Torque:
113 N·m (1,152 kgf·cm, 83 ft·lbf) for bolt A
157 N·m (1,601 kgf·cm, 116 ft·lbf) for bolt B

(b) Remove the jack.

cardiagn.com

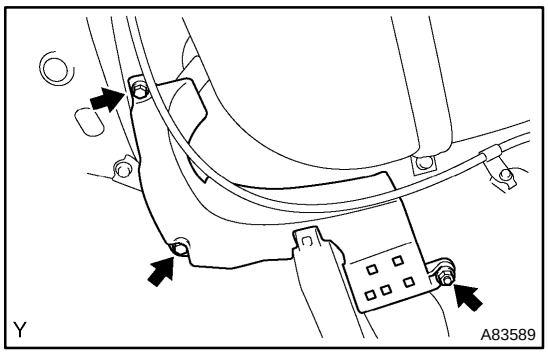

42. INSTALL WIRING HARNESS PROTECTOR NO.1

NOTICE:

Wear insulating gloves.

(a) Install the wiring harness protector No. 1 with the 2 bolts and nut.
Torque: 9.0 N·m (92 kgf·cm, 80 in.·lbf)

43. INSTALL FRONT FLOOR COVER CENTER LH
44. INSTALL FRONT FLOOR COVER LH
45. INSTALL ENGINE UNDER COVER RH
46. INSTALL ENGINE UNDER COVER LH
47. INSTALL STEERING INTERMEDIATE SHAFT (See page 14–32)
48. INSTALL COLUMN HOLE COVER SILENCER SHEET (See page 14–32)

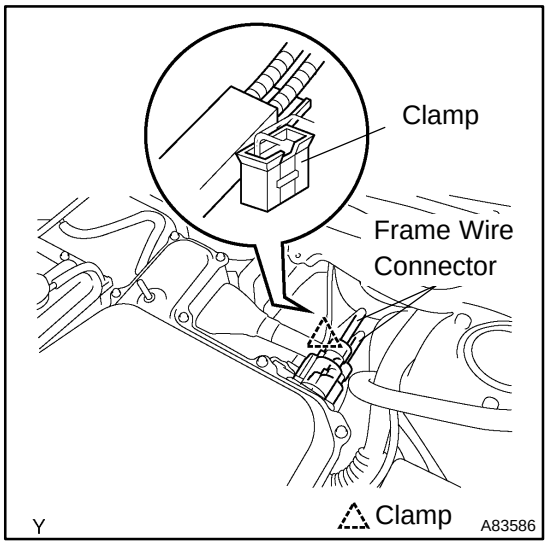

49. INSTALL FRAME WIRE (FR POSITION)

NOTICE:

Wear insulating gloves.

(a) Connect the 2 connectors shown in the illustration to the with converter inverter assembly.
(b) Connect the clamp to the engine room relay block with the nut.

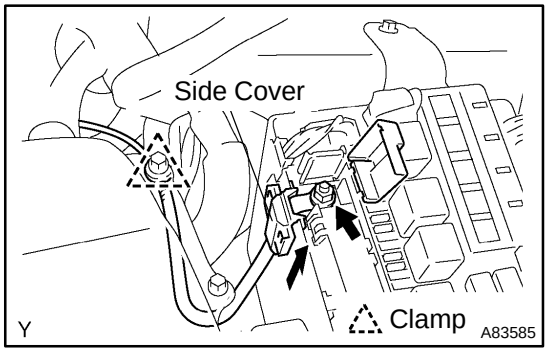

(c) Install the frame wire to the engine room relay block with the nut.
Torque: 9.0 N·m (92 kgf·cm, 80 in.·lbf)
(d) Install the side cover to the engine room relay block.
(e) Install the frame wire clamp to the side member.

50. INSTALL COWL TOP PANEL SUB–ASSY OUTER FRONT
51. INSTALL WINDSHIELD WIPER LINK ASSY (See page 66–14)
52. INSTALL COWL TOP VENTILATOR LOUVER RH
53. INSTALL COWL TOP VENTILATOR LOUVER LH

cardiagn.com

54. INSTALL HOOD TO COWL TOP SEAL
55. INSTALL FR WIPER ARM LH (See page 66–14)
56. INSTALL FR WIPER ARM RH (See page 66–14)
57. INSTALL FRONT WIPER ARM HEAD CAP

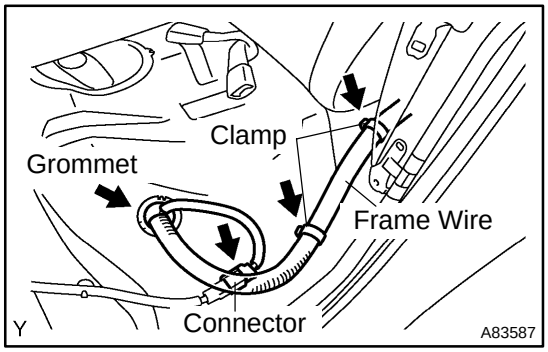

58. INSTALL FRAME WIRE (RR POSITION)
NOTICE:
Wear insulating gloves.
(a) Connect the connector.
(b) Install the 2 clamps, then connect the frame wire to the center floor panel.

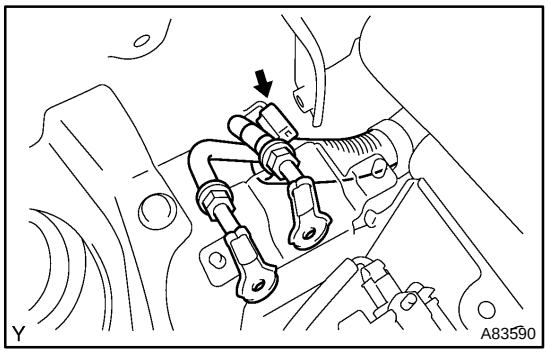

(c) Install the frame wire to the rear floor panel with the clamp.

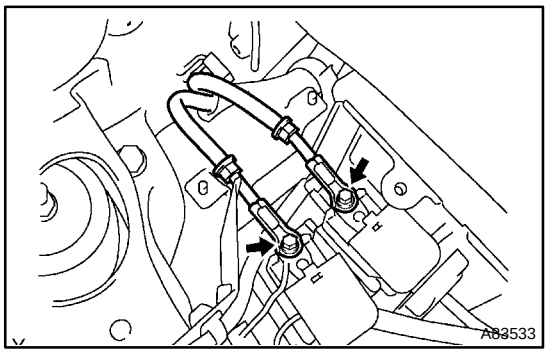

(d) Install the frame wire to the system main relay No. 2 and No. 3 with 2 new nuts.
Torque: 5.6 N·m (57 kgf·cm, 50 in.·lbf)

59. INSTALL JUNCTION TERMINAL (See page 21–54)
NOTICE:
Wear insulating gloves.
60. INSTALL BATTERY CARRIER PANEL NO.6 (See page 21–54)

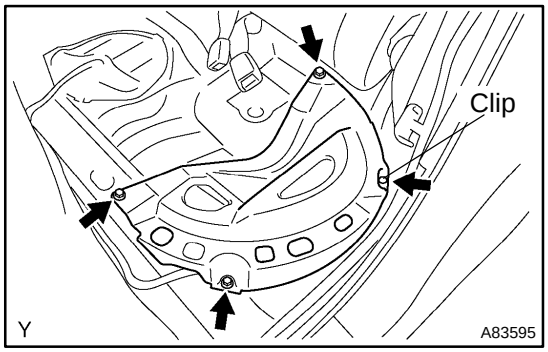

61. INSTALL FLOOR SIDE PANEL LH
(a) Install the clip.
(b) Install the floor side panel with the 3 bolts.

cardiagn.com

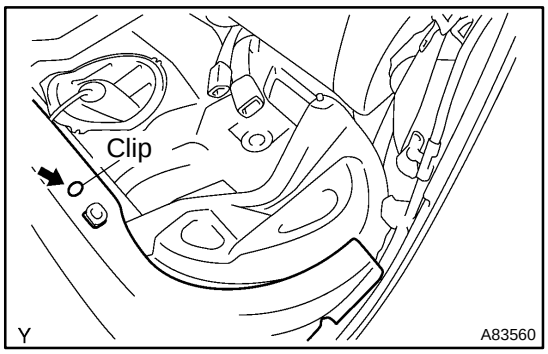

(c) Install the carpet with the clip.

62. INSTALL REAR DOOR SCUFF PLATE LH
63. INSTALL BATTERY CARRIER BRACKET (See page 21–54)
64. INSTALL DECK TRIM SIDE PANEL ASSY LH
65. INSTALL DECK FLOOR BOX LH
66. INSTALL REAR FLOOR BOARD NO.4
67. INSTALL REAR SIDE SEAT BACK FRAME LH
68. INSTALL REAR FLOOR BOARD NO.1
69. INSTALL REAR SEAT CUSHION ASSY
70. INSTALL TONNEAU COVER ASSY
71. INSTALL DECK TRIM COVER REAR
72. INSTALL SERVICE PLUG GRIP (See page 21–116)

NOTICE:
Wear insulating gloves.

73. CONNECT BATTERY NEGATIVE TERMINAL
Torque: 6.0 N·m (61 kgf·cm, 53 in.·lbf)
74. INSTALL REAR FLOOR BOARD NO.3
75. INSTALL DECK FLOOR BOX REAR
76. INSTALL REAR FLOOR BOARD NO.2
77. INSTALL FRONT WHEELS
Torque: 103 N·m (1,050 kgf·cm, 76 ft·lbf)
78. POWER WINDOW CONTROL SYSTEM INITIALIZE (See page 01–28)

cardiagn.com

SERVICE PLUG GRIP

21041–01

Removal & Installation and Disassembly & Reassembly

NOTICE:

- **When working on the high voltage systems, always wear insulating gloves.**
- **After removing the service plug grip, do not operate the power switch as it may damage the hybrid vehicle control ECU.**
- **Keep the removed service plug in your pocket to prevent other technicians from reconnecting it while you are servicing the vehicle.**
- **After removing the service plug grip, do not touch the high voltage connectors and terminals for 5 minutes.**

1. PRECAUTION (See page 21–7)

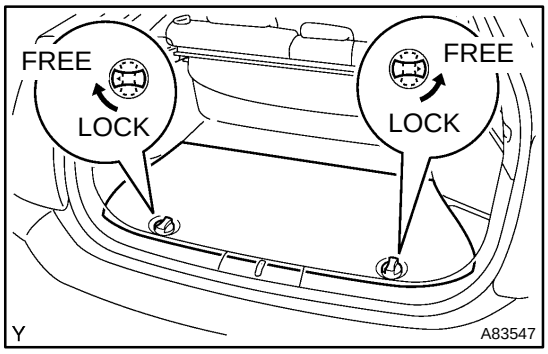

2. REMOVE REAR FLOOR BOARD NO.2

(a) As shown in the illustration, twist the knob and release the lock.

(b) Remove the rear floor board No. 2.

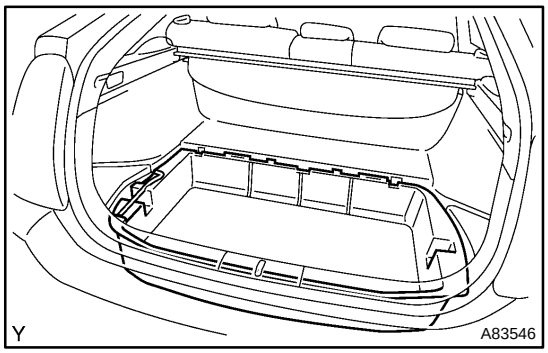

3. REMOVE DECK FLOOR BOX REAR

(a) Remove the deck floor box rear as shown in the illustration.

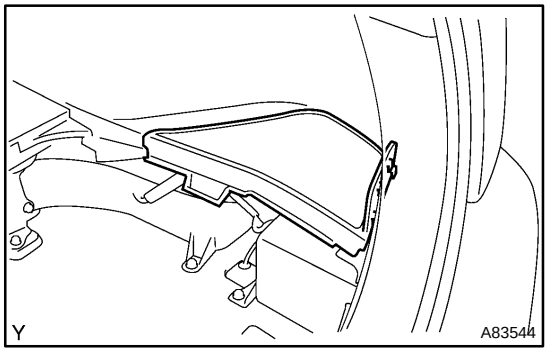

4. REMOVE REAR FLOOR BOARD NO.3

(a) Remove the rear floor board No. 3 as shown in the illustration.

cardiagn.com

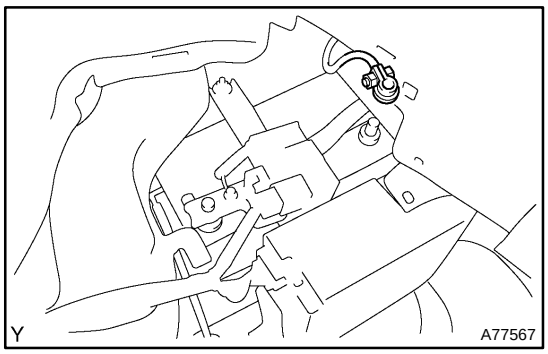

5. DISCONNECT BATTERY NEGATIVE TERMINAL

(a) Disconnect the negative terminal of the 12 V auxiliary battery.

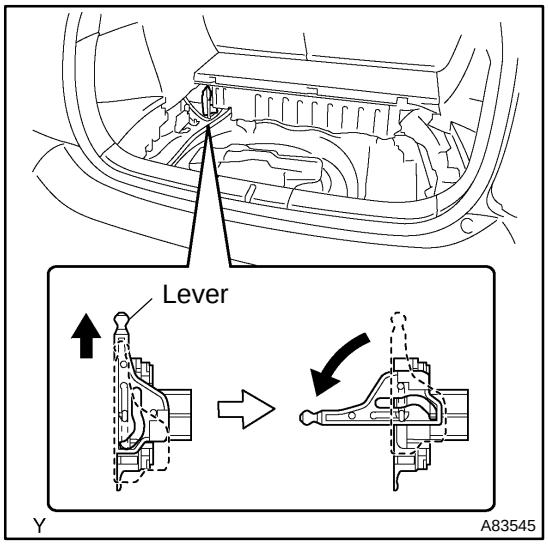

6. REMOVE SERVICE PLUG GRIP

NOTICE:

Wear insulating gloves.

(a) Slide up the lever of the service plug grip. Remove the service plug grip while turning the lever to the left.

(b) Insulate the service plug with insulating tape.

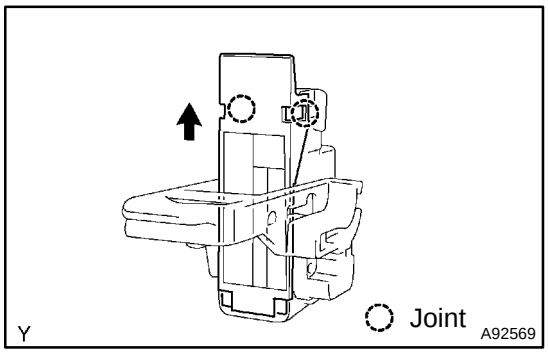

7. REMOVE ELECTRIC VEHICLE FUSE

(a) Remove the 2 joints shown in the illustration, then remove the service plug grip cover.

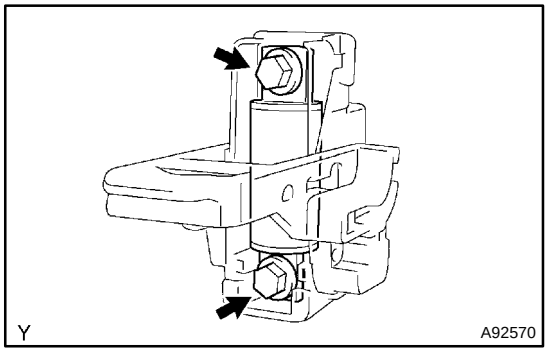

(b) Remove the 2 bolts and electric vehicle fuse.

8. INSTALL ELECTRIC VEHICLE FUSE

(a) Install the electric vehicle fuse with the 2 bolts.
Torque: 5.4 N·m (55 kgf·cm, 48 in.·lbf)

(b) Fit the 2 joints, then install the service plug grip cover.

cardiagn.com

9. INSTALL SERVICE PLUG GRIP

NOTICE:

Wear insulating gloves.

(a) Joint the service plug grip with the HV battery.

(b) While pushing the service plug grip to the right, rotate the lever to the right.

(c) Be sure to slide the lever down to lock the service plug grip in place.

NOTICE:

- **The service plug grip must be locked. If not, it may cause DTCs to output.**
- **Do not operate the power switch when the service plug grip is not properly locked. It may damage the hybrid vehicle control ECU in rare cases.**

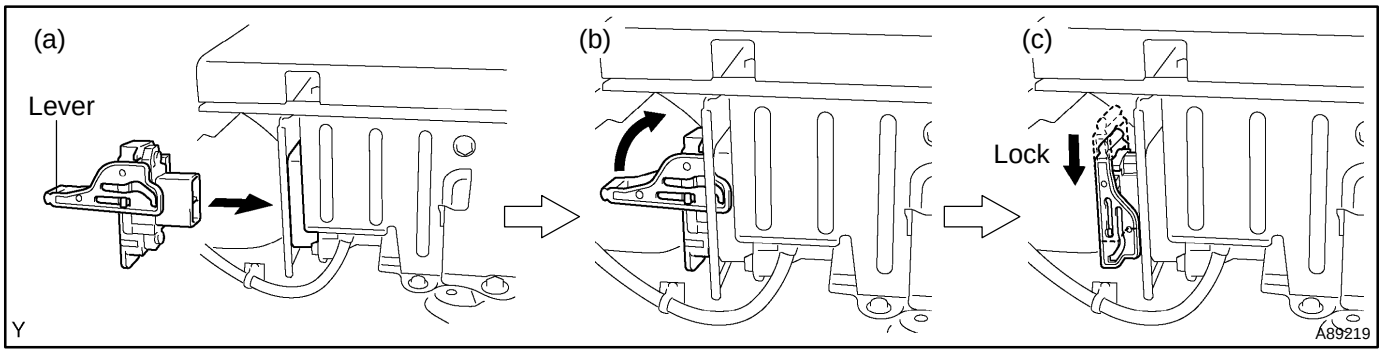

10. CONNECT BATTERY NEGATIVE TERMINAL
Torque: 6.0 N·m (61 kgf·cm, 53 in.·lbf)

11. INSTALL REAR FLOOR BOARD NO.3

12. INSTALL DECK FLOOR BOX REAR

13. INSTALL REAR FLOOR BOARD NO.2

14. POWER WINDOW CONTROL SYSTEM INITIALIZE (See page 01–28)

cardiagn.com

BATTERY BLOWER ASSY

COMPONENTS

21042–01

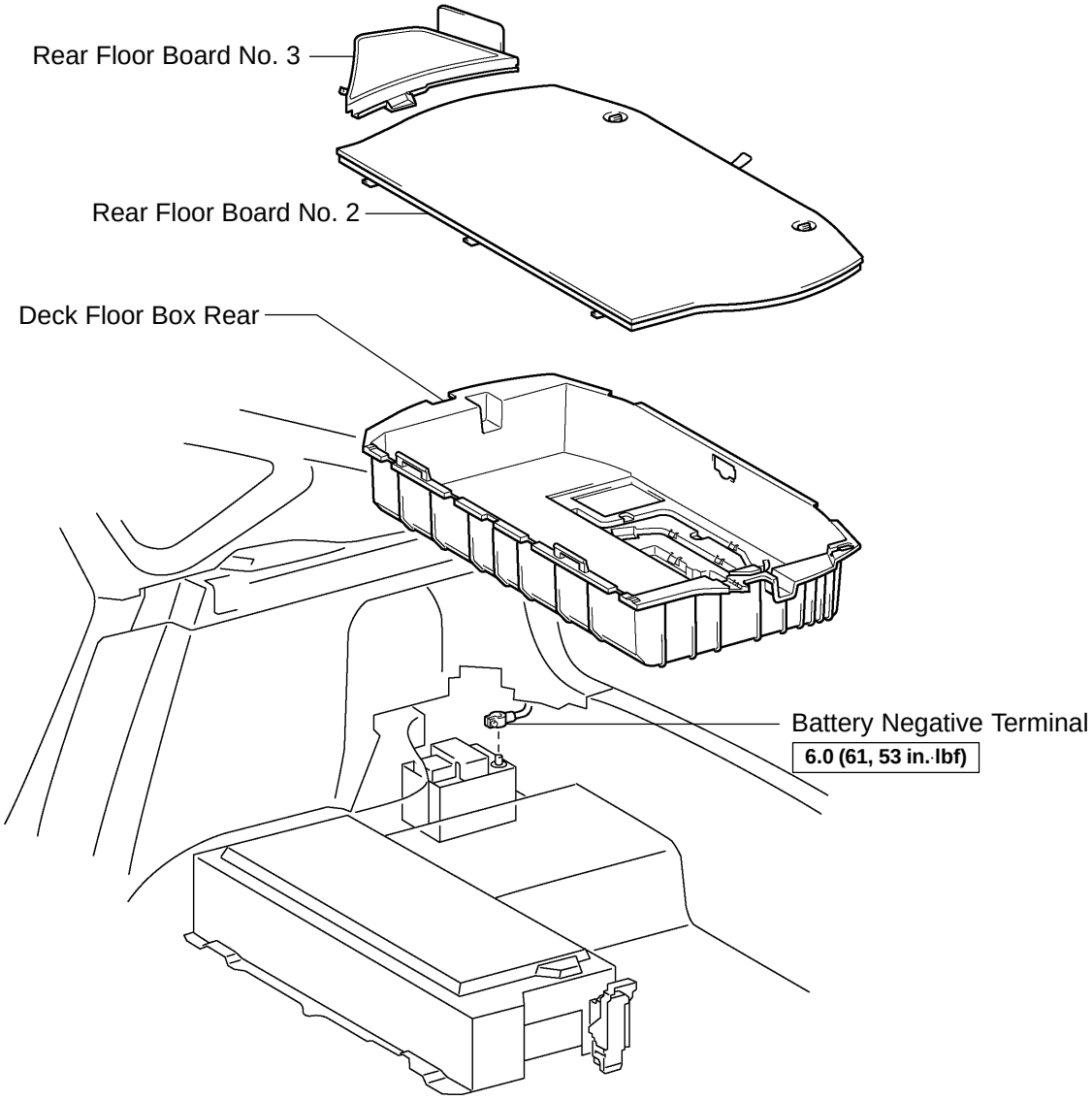

o N·m (kgf·cm, ft·lbf): Specified torque

A83655

cardiagn.com

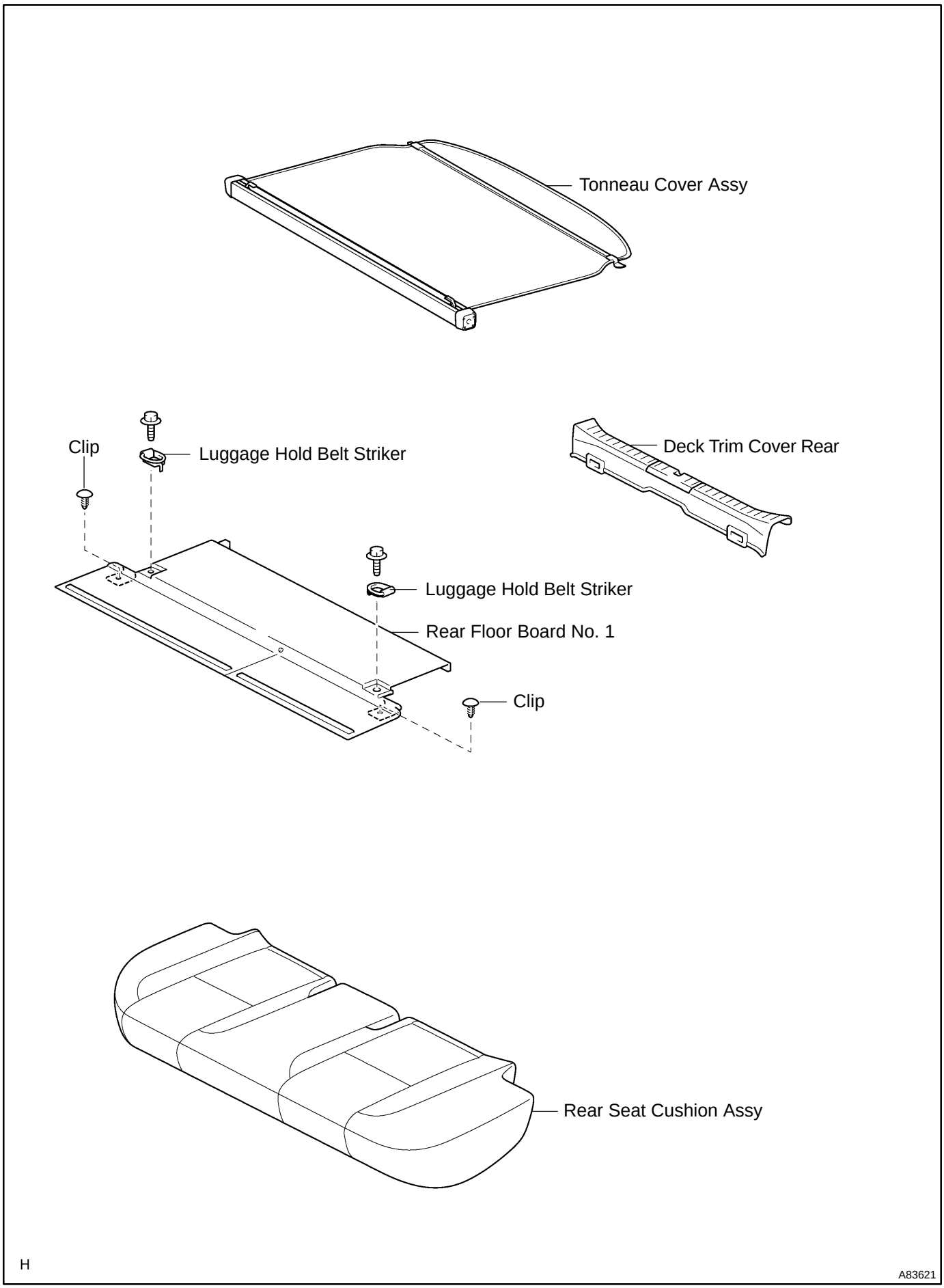

cardiagn.com

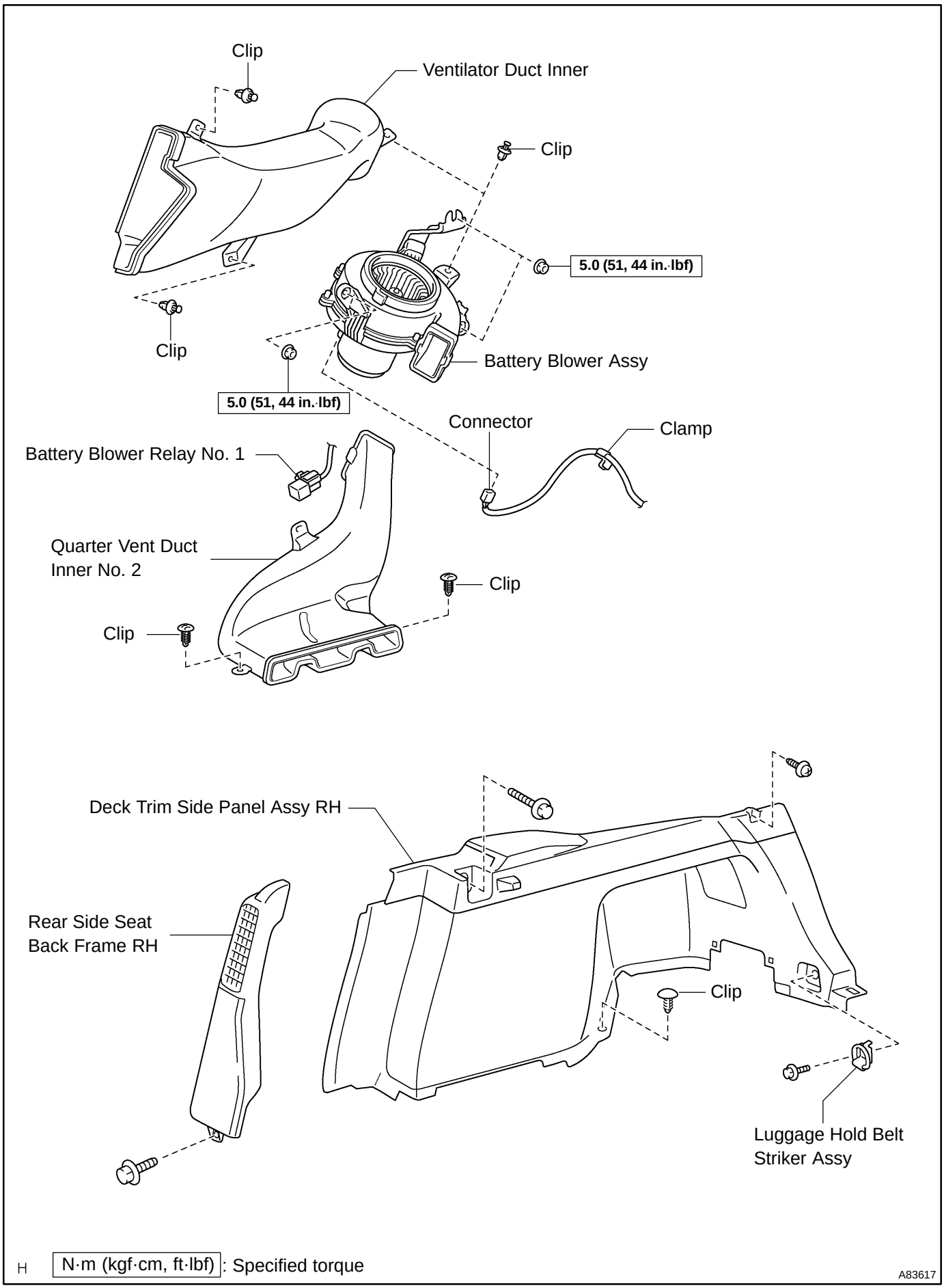

cardiagn.com

21043–01

REPLACEMENT

1. **REMOVE REAR FLOOR BOARD NO.2 (See page 21–116)**
2. **REMOVE DECK FLOOR BOX REAR (See page 21–116)**
3. **REMOVE REAR FLOOR BOARD NO.3 (See page 21–116)**
4. **DISCONNECT BATTERY NEGATIVE TERMINAL (See page 21–116)**
5. **REMOVE DECK TRIM COVER REAR (See page 21–54)**
6. **REMOVE TONNEAU COVER ASSY (See page 21–54)**
7. **REMOVE REAR SEAT CUSHION ASSY (See page 21–54)**
8. **REMOVE REAR FLOOR BOARD NO.1 (See page 21–54)**
9. **REMOVE REAR SIDE SEAT BACK FRAME RH (See page 21–54)**
10. **REMOVE DECK TRIM SIDE PANEL ASSY RH (See page 21–54)**
11. **REMOVE QUARTER VENT DUCT INNER NO.2 (See page 21–54)**

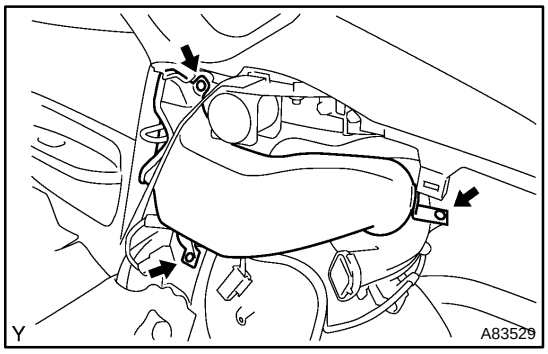

12. REMOVE VENTILATOR DUCT INNER

(a) Remove the 3 clips and ventilator duct inner.

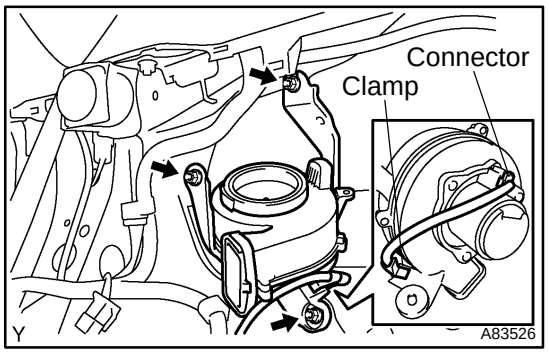

13. REMOVE BATTERY BLOWER ASSY

(a) Remove the 3 nuts, then disconnect the battery blower assembly from the vehicle.

(b) Remove the connector, clamp and battery blower assembly.

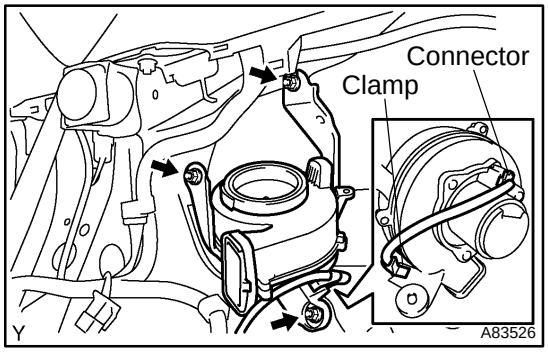

14. INSTALL BATTERY BLOWER ASSY

(a) Connect the connector to the battery blower assembly.

(b) Install the clamp on the battery blower assembly.

(c) Install the battery blower assembly with the 3 nuts.
Torque: 5.0 N·m (51 kgf·cm, 44 in.·lbf)

15. **INSTALL VENTILATOR DUCT INNER**
16. **INSTALL QUARTER VENT DUCT INNER NO.2**
17. **INSTALL DECK TRIM SIDE PANEL ASSY RH**
18. **INSTALL REAR SIDE SEAT BACK FRAME RH**

cardiagn.com

19. INSTALL REAR FLOOR BOARD NO.1
20. INSTALL REAR SEAT CUSHION ASSY
21. INSTALL TONNEAU COVER ASSY
22. INSTALL DECK TRIM COVER REAR
23. CONNECT BATTERY NEGATIVE TERMINAL
Torque: 6.0 N·m (61 kgf·cm, 53 in.·lbf)
24. INSTALL REAR FLOOR BOARD NO.3
25. INSTALL DECK FLOOR BOX REAR
26. INSTALL REAR FLOOR BOARD NO.2
27. POWER WINDOW CONTROL SYSTEM INITIALIZE (See page 01–28)

cardiagn.com

HYBRID VEHICLE CONTROL ECU

21044–01

REPLACEMENT

1. **REMOVE REAR FLOOR BOARD NO.2 (See page 21–116)**
2. **REMOVE DECK FLOOR BOX REAR (See page 21–116)**
3. **REMOVE REAR FLOOR BOARD NO.3 (See page 21–116)**
4. **DISCONNECT ENGINE WIRE NO.3 (BATTERY NEGATIVE TERMINAL) (See page 21–116)**
5. **REMOVE INSTRUMENT PANEL REGISTER ASSY NO.1 (See page 71–13)**
6. **REMOVE INSTRUMENT PANEL FINISH PANEL SUB–ASSY LOWER (See page 71–13)**
7. **REMOVE INSTRUMENT PANEL FINISH PANEL SUB–ASSY UPPER (See page 71–13)**
8. **REMOVE INSTRUMENT PANEL REGISTER ASSY NO.3 (See page 71–13)**
9. **REMOVE INSTRUMENT PANEL REGISTER ASSY NO.4 (See page 71–13)**
10. **REMOVE INSTRUMENT PANEL REGISTER ASSY NO.2 (See page 71–13)**
11. **REMOVE MULTI–DISPLAY ASSY (See page 71–13)**
12. **REMOVE GLOVE COMPARTMENT DOOR STOPPER SUB–ASSY (See page 71–13)**
13. **REMOVE GLOVE COMPARTMENT DOOR ASSY (See page 71–13)**
14. **REMOVE GLOVE COMPARTMENT DOOR (See page 71–13)**
15. **REMOVE INSTR PANEL SPEAKER PANEL SUB–ASSY NO.1 W/CTR SPEAKER (See page 71–13)**
16. **REMOVE FRONT PILLAR GARNISH CORNER PIECE RH (See page 71–13)**
17. **REMOVE FRONT PILLAR GARNISH CORNER PIECE LH (See page 71–13)**
18. **REMOVE FRONT PILLAR GARNISH RH (See page 71–13)**
19. **REMOVE FRONT PILLAR GARNISH LH (See page 71–13)**
20. **DISCONNECT PASSENGER AIRBAG CONNECTOR (See page 71–13)**
21. **REMOVE INSTRUMENT PANEL SUB–ASSY W/PASSENGER AIRBAG ASSY (See page 71–13)**
22. **REMOVE HEATER TO REGISTER DUCT NO.3 (See page 71–13)**
23. **REMOVE ECM (See page 10–24)**

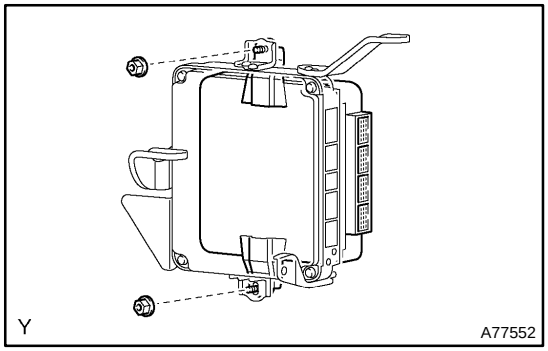

24. **REMOVE HYBRID VEHICLE CONTROL ECU**
(a) Remove the 2 nuts and hybrid vehicle control ECU.

25. **INSTALL HYBRID VEHICLE CONTROL ECU**
(a) Install the hybrid vehicle control ECU with the 2 nuts.
Torque: 5.5 N·m (56 kgf·cm, 49 in.·lbf)
26. **INSTALL ECM (See page 10–24)**
27. **INSTALL HEATER TO REGISTER DUCT NO.3**
28. **INSTALL INSTRUMENT PANEL SUB–ASSY W/PASSENGER AIRBAG ASSY**
29. **CONNECT PASSENGER AIRBAG CONNECTOR**
30. **INSTALL FRONT PILLAR GARNISH RH**
31. **INSTALL FRONT PILLAR GARNISH LH**

cardiagn.com

32. INSTALL FRONT PILLAR GARNISH CORNER PIECE RH
33. INSTALL FRONT PILLAR GARNISH CORNER PIECE LH
34. INSTALL INSTR PANEL SPEAKER PANEL SUB–ASSY NO.1 W/CTR SPEAKER
35. INSTALL GLOVE COMPARTMENT DOOR
36. INSTALL GLOVE COMPARTMENT DOOR ASSY
37. INSTALL GLOVE COMPARTMENT DOOR STOPPER SUB–ASSY
38. INSTALL MULTI–DISPLAY ASSY
39. INSTALL INSTRUMENT PANEL REGISTER ASSY NO.2
40. INSTALL INSTRUMENT PANEL REGISTER ASSY NO.4
41. INSTALL INSTRUMENT PANEL REGISTER ASSY NO.3
42. INSTALL INSTRUMENT PANEL FINISH PANEL SUB–ASSY UPPER
43. INSTALL INSTRUMENT PANEL FINISH PANEL SUB–ASSY LOWER
44. INSTALL INSTRUMENT PANEL REGISTER ASSY NO.1
45. CONNECT BATTERY NEGATIVE TERMINAL
    Torque: 6.0 N·m (61 kgf·cm, 53 in.·lbf)
46. INSPECT SRS WARNING LIGHT
47. INSTALL REAR FLOOR BOARD NO.3
48. INSTALL DECK FLOOR BOX REAR
49. INSTALL REAR FLOOR BOARD NO.2
50. REGISTER ECU COMMUNICATION ID (W/O SMART KEY) (See page 05–2382)
51. REGISTER ECU COMMUNICATION ID (W/ SMART KEY) (See page 05–2333)
52. POWER WINDOW CONTROL SYSTEM INITIALIZE (See page 01–28)

cardiagn.com

WATER W/MOTOR & BRACKET PUMP ASSY

21046–01

REPLACEMENT

1. REMOVE RADIATOR SUPPORT OPENING COVER

2. REMOVE ENGINE UNDER COVER LH

3. REMOVE ENGINE UNDER COVER RH

4. DRAIN HV COOLANT (See page 22–4)

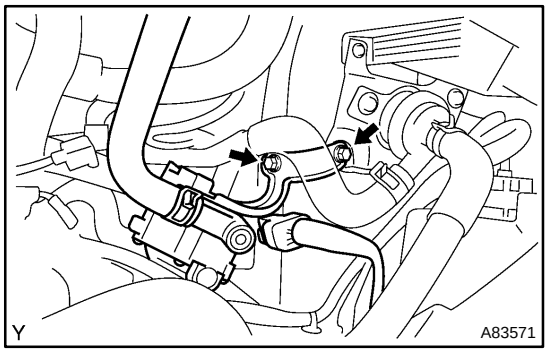

5. REMOVE WATER W/BRACKET VALVE ASSY

(a) Remove the bolt and nut, then disconnect the water valve.

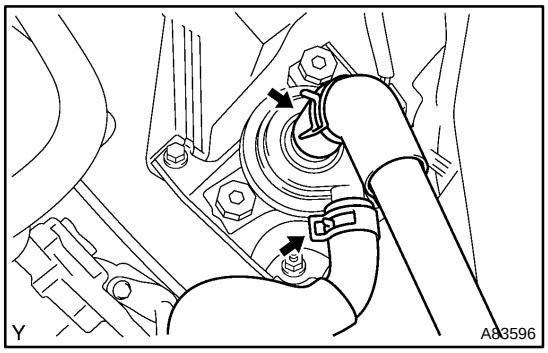

6. REMOVE WATER W/MOTOR & BRACKET PUMP ASSY

(a) Disconnect the 2 inverter cooling hoses shown in the illustration.

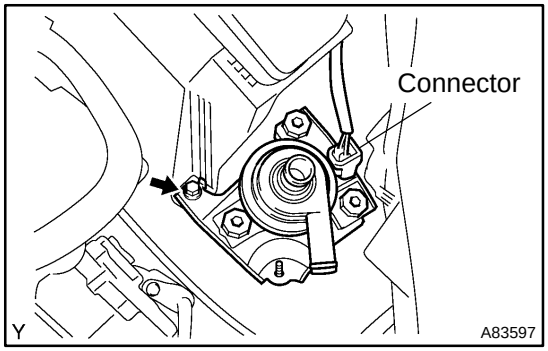

(b) Remove the bolt, then disconnect the water with motor and bracket pump from the vehicle.

(c) Disconnect the connector and remove the water pump with motor and bracket pump.

7. INSTALL WATER W/MOTOR & BRACKET PUMP ASSY

(a) Connect the connector.

(b) Install the water with motor and bracket pump with the bolt.
Torque: 7.0 N·m (71 kgf·cm, 62 in.·lbf)

(c) Connect the 2 inverter cooling hoses.

8. INSTALL WATER W/BRACKET VALVE ASSY

(a) Install the water valve with the bolt and nut.
Torque: 7.0 N·m (71 kgf·cm, 62 in.·lbf)

9. ADD HV COOLANT (See page 22–4)

cardiagn.com

10. CHECK FOR ENGINE COOLANT LEAKS (See page 16–2)
11. INSTALL ENGINE UNDER COVER RH
12. INSTALL ENGINE UNDER COVER LH
13. INSTALL RADIATOR SUPPORT OPENING COVER

cardiagn.com

ACCELERATOR PEDAL ROD ASSY

21045–01

REPLACEMENT

1. **REMOVE REAR FLOOR BOARD NO.2 (See page 21–116)**
2. **REMOVE DECK FLOOR BOX REAR (See page 21–116)**
3. **REMOVE REAR FLOOR BOARD NO.3 (See page 21–116)**
4. **DISCONNECT BATTERY NEGATIVE TERMINAL (See page 21–116)**

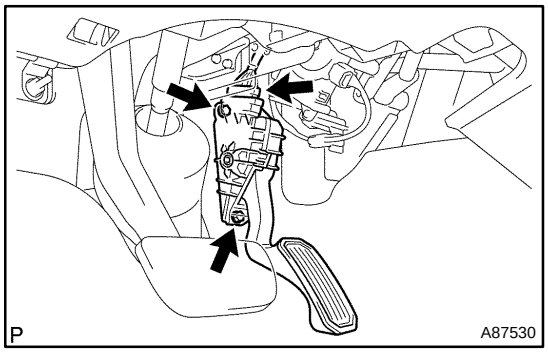

5. **REMOVE ACCELERATOR PEDAL ROD ASSY**
   (a) Disconnect the accelerator position sensor connector.
   (b) Remove the 2 bolts, then remove the accelerator pedal.

6. **INSTALL ACCELERATOR PEDAL ROD ASSY**
   Torque: 7.5 N·m (77 kgf·cm, 66 in.·lbf)
7. **CONNECT BATTERY NEGATIVE TERMINAL**
   Torque: 6.0 N·m (61 kgf·cm, 53 in.·lbf)
8. **INSTALL REAR FLOOR BOARD NO.3**
9. **INSTALL DECK FLOOR BOX REAR**
10. **INSTALL REAR FLOOR BOARD NO.2**
11. **POWER WINDOW CONTROL SYSTEM INITIALIZE (See page 01–28)**

cardiagn.com