CRUISE CONTROL SYSTEM

PARTS LOCATION

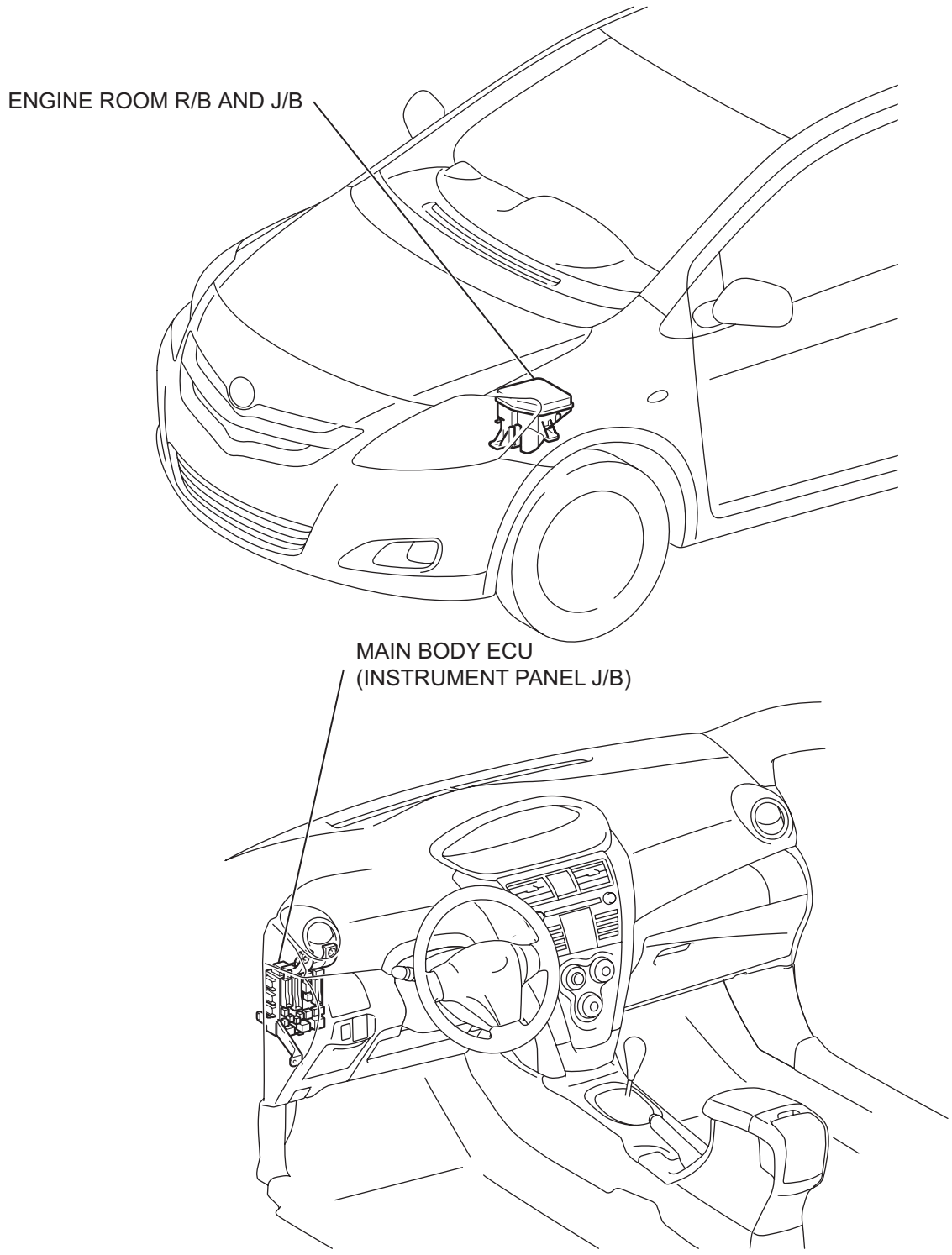

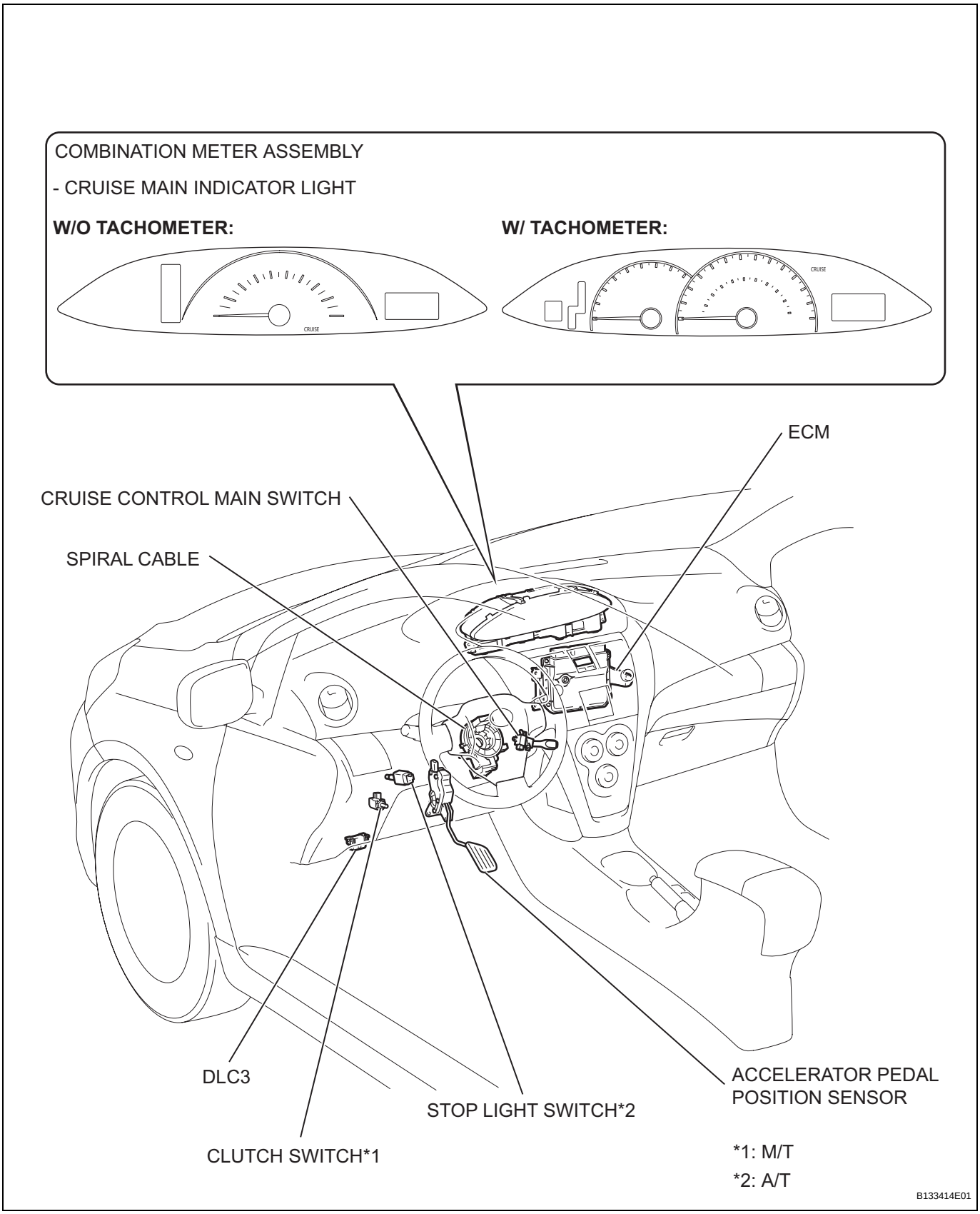
COMBINATION METER ASSEMBLY
- CRUISE MAIN INDICATOR LIGHT
W/O TACHOMETER:
W/ TACHOMETER:
CRUISE
CRUISE
ECM
CRUISE CONTROL MAIN SWITCH
SPIRAL CABLE
DLC3
CLUTCH SWITCH*1
STOP LIGHT SWITCH*2
ACCELERATOR PEDAL POSITION SENSOR
*1: M/T
*2: A/T
B133414E01

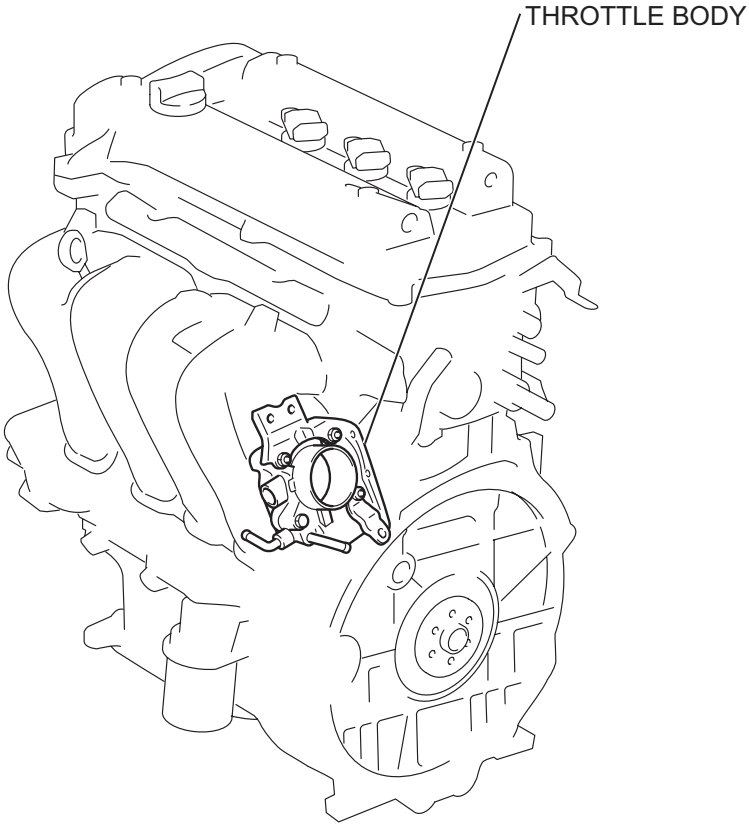

B133419E01

SYSTEM DIAGRAM

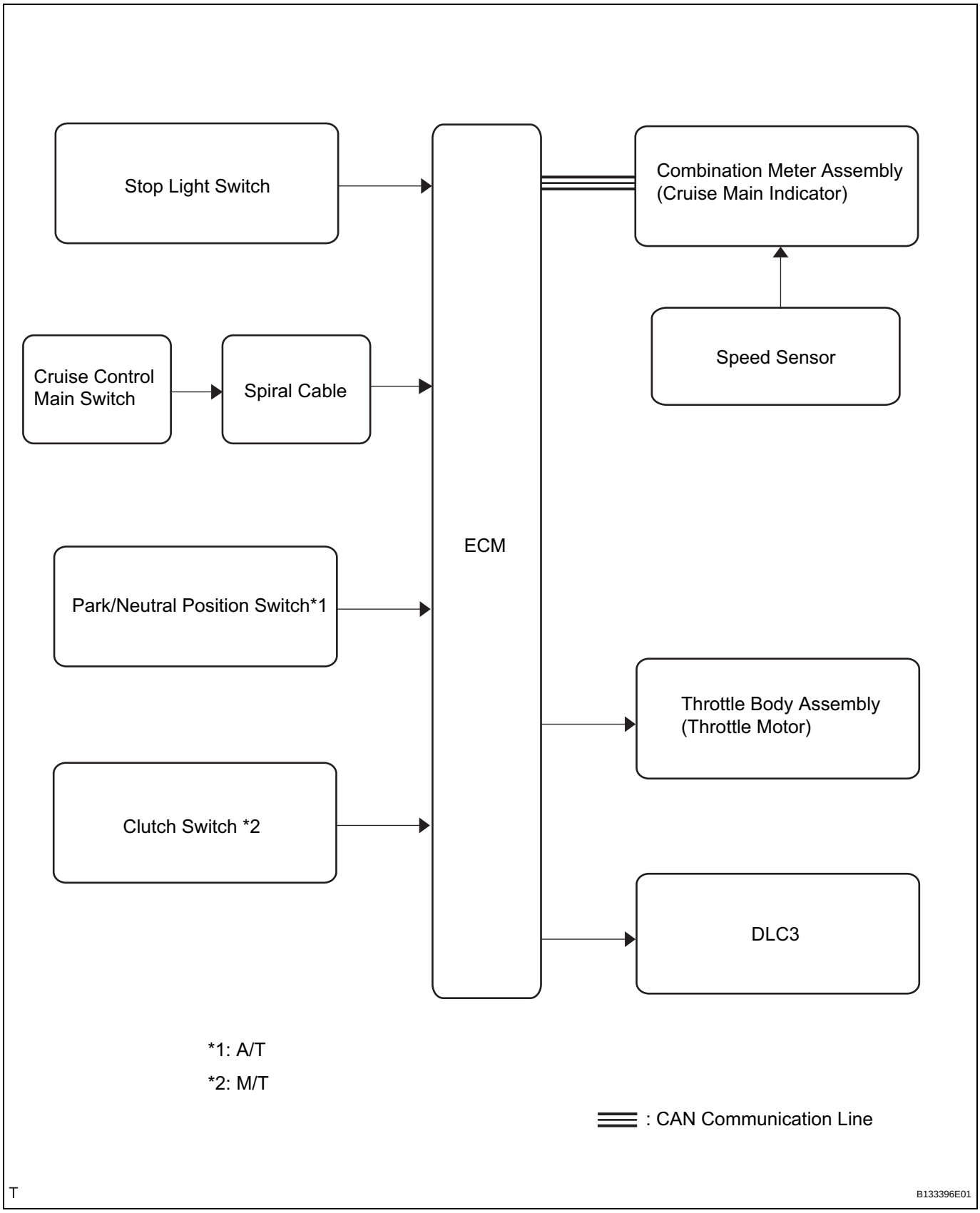

SYSTEM DESCRIPTION

1. CRUISE CONTROL SYSTEM

The cruise control system makes it possible to drive at a desired speed without using the accelerator pedal. The ECM controls the throttle opening angle based on signals from switches and sensors.

The microcomputer which controls the cruise control system is built into the ECM, and uses is the throttle position sensor and motor as the actuator.

Constant speed control gets ready when the cruise control main switch ON-OFF button is pushed (the CRUISE MAIN indicator light comes on).

By operating the cruise control main switch, the driver can control the following functions.

HINT:

- The cruise control main switch is an automatic return type switch which operates only while it is pushed in each allow direction and turns off when it is released.
- "SET" and "-", "RES" and "+", "ON" and "OFF" operations are all controlled by using the same switch.

(a) 'SET' function

When the cruise control main switch is pushed down to "-/SET", the ECM stores the set speed and compares it with the actual vehicle speed. If the actual driving speed is greater than the set speed, the ECM sends a signal to the throttle position sensor and motor to close the throttle valve. If lower, it opens the throttle valve. The cruise control operative speed range is between the low and high speed limits.

(b) '+' function

The cruise set speed increases while the cruise control main switch lever is pushed up to "+/RES". The vehicle begins to cruise at the newly set speed when the cruise control main switch lever is released.

(c) Tap-up function

When the cruise control main switch lever is tapped up to "+/RES" (approximately 0.6 seconds), the ECM increases the stored set speed by 1 mph (1.6 km/h) at a time. However, when the difference between the driving and the stored vehicle speeds is more than 3.1 mph (approximately 5 km/h), the stored vehicle speed will not change.

(d) '-' function

The cruise set speed decreases while the cruise control main switch lever is pushed down to "-/SET". The vehicle begins to cruise at the newly set speed when the cruise control main switch lever is released.

(e) Tap-down function
When the cruise control main switch lever is tapped down to "-/SET" (approximately 0.6 seconds), the ECM decreases the stored set speed by 1 mph (1.6 km/h) at a time. However, when the difference between the driving and the stored vehicle speeds is more than 3.1 mph (approximately 5 km/h), the vehicle speed, when the cruise control main switch lever is released from "-/SET", will be stored and constant speed control is maintained.

(f) Low speed limit
The lowest possible limit of the speed setting range is approximately 25 mph (40 km/h). The cruise control system cannot be set when the vehicle speed is below that low speed limit. Cruise control operation is automatically canceled when the vehicle speed decreases to below the low speed limit while the cruise control is in operation.

(g) High speed limit
The highest possible limit of the speed setting range is approximately 125 mph (200 km/h). The cruise control system cannot be set when the vehicle speed is over the high speed limit. The speed cannot be increased using "+/RES" with the cruise control main switch assembly to beyond the high speed limit.

(h) 'RES' function
If the cruise control operation was canceled under the manual cancel condition (other than by turning cruise control main switch ON-OFF button off), and if the driving speed is within the limit range, pushing the cruise control main switch to "+/RES" restores the vehicle speed stored at the time of cancellation, and maintains constant speed control. Even when cruise control is canceled automatically due to the vehicle speed decreasing below the low speed limit, cruise control can be resumed when the vehicle speed returns to over the low speed limit, since the stored vehicle speed remains in the memory.

(i) MANUAL CANCEL function
The ECM cancels the cruise control while driving under the following conditions:
- The cruise control main switch is pulled to "CANCEL".
- The brake pedal is depressed.
- The clutch pedal is depressed (M/T only).
- The cruise control main switch ON-OFF button is pushed off.
- The D position circuit in the neutral start switch is turned from ON to OFF. The gear is shifted from the D or 3rd position to any of the N, 2nd or 1st positions (A/T only).

(j) AUTO CANCEL function

(1) When any of the following malfunctions occurs, the ECM clears the set vehicle speed and deactivates the cruise control.
In this case, the power indicator continues blinking until the cruise control main switch is turned OFF and the ECM allows the cruise control to be reactivated when the main switch is next turned ON again.
- Open or short malfunctions in the stop light switch.
- Abnormalities in the vehicle speed signal.
- Malfunctions in the throttle body.

(2) When any of the following malfunctions occurs, the ECM clears the set vehicle speed and deactivates the cruise control.
In this case, the power indicator continues blinking until the cruise control main switch is turned OFF and the ECM allows the cruise control to be reactivated when the ignition switch is next turned ON again.
- Malfunctions in the stop light switch input circuit.
- Malfunctions in the cancel circuit.

(3) When the vehicle is in one of the following conditions, the ECM deactivates the cruise control (the cruise control can be reset).
- Actual vehicle speed is below the lower vehicle speed limit (the set vehicle speed is retained).
- Actual vehicle speed decreases by 10 mph (16 km/h) from the set vehicle speed (the set vehicle speed is cleared).

CC

HOW TO PROCEED WITH TROUBLESHOOTING

HINT:
- Use the following procedures to troubleshoot the cruise control system.
- *: Use the intelligent tester.

1 VEHICLE BROUGHT TO WORKSHOP

NEXT

2 PROBLEM SYMPTOM CONFIRMATION

NEXT

3 CHECK CAN COMMUNICATION SYSTEM*

(a) Check for output DTCs.
Result

Result	Proceed to
CAN DTC is not output	A
CAN DTC is output	B

HINT:
The ECM of this system is connected to the CAN communication system. Therefore, before starting troubleshooting, be sure to check that there is no trouble in the CAN communication system.

B → **PROCEED TO CAN COMMUNICATION SYSTEM**

A

4 DTC CHECK AND CLEAR*

Refer to the DTC CHECK / CLEAR (See page CC-15).

NEXT

5 DTC CHECK (OTHER THAN CAN SYSTEM DTC)*

Result

Result	Proceed to
DTC is not output	A
DTC is output	B

A → **GO TO STEP 7**

B

6	DTC CHART

Refer to the DIAGNOSTIC TROUBLE CODE CHART (See page CC-17).

NEXT

GO TO STEP 10

CC

7	PROBLEM SYMPTOM CONFIRMATION

Result

Result	Proceed to
Symptom occurs	A
Symptom does not occur	B

A → **GO TO STEP 9**

B

8	SYMPTOM SIMULATION

Refer to the ELECTRONIC CIRCUIT INSPECTION PROCEDURE See page IN-34).

NEXT

9	PROBLEM SYMPTOMS TABLE

Refer to the PROBLEM SYMPTOMS TABLE (See page CC-11).

NEXT

10	CIRCUIT INSPECTION

NEXT

11	TERMINALS OF ECM

Refer to TERMINALS OF ECM (See page CC-12).

NEXT

12	IDENTIFICATION OF PROBLEM

NEXT

13	REPAIR OR REPLACE

NEXT

CC

14	CONFIRMATION TEST

NEXT

END

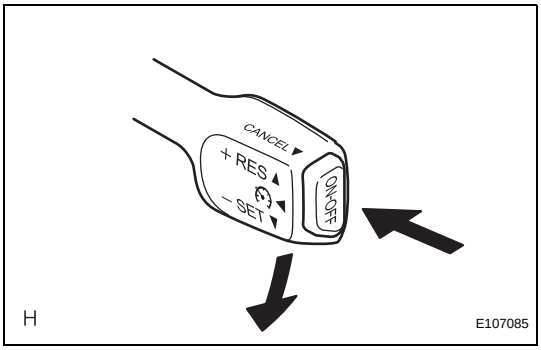

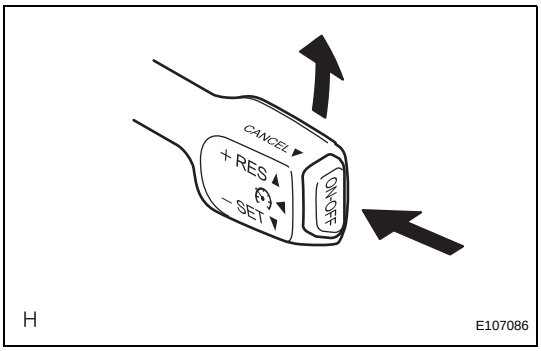

ROAD TEST

1. PROBLEM SYMPTOM CONFIRMATION

(a) Inspect the SET function.
- (1) Turn the cruise control main switch on.
- (2) Drive at the required speed between 25 mph (40 km/h) and 125 mph (200 km/h).
- (3) Push the cruise control main switch to - (COAST)/SET.
- (4) After releasing the switch, check that the vehicle cruises at the set speed.

(b) Inspect the ACCELERATION function.
- (1) Turn the cruise control main switch on.
- (2) Drive at the required speed between 25 mph (40 km/h) and 125 mph (200 km/h).
- (3) Push the cruise control main switch to - (COAST)/SET.
- (4) Check that the vehicle speed increases while the cruise control main switch is pushed to + (ACCEL)/RES (RESUME), and that the vehicle cruises at the newly set speed when the switch is released.
- (5) Push the cruise control main switch to + (ACCEL)/RES (RESUME) and then release it immediately. Check that the vehicle speed increases by approximately 1.0 mph (1.6 km/h) (tap-up control).

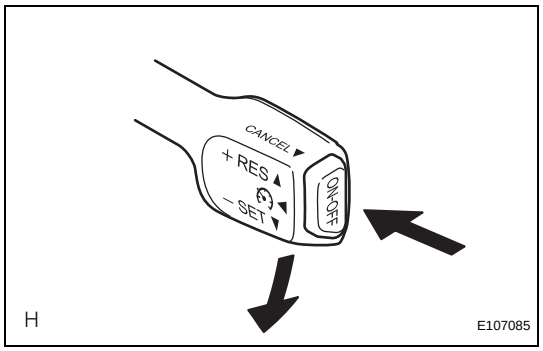

(c) Inspect the - (COAST) function.
  (1) Turn the cruise control main switch on.
  (2) Drive at the required speed between 25 mph (40 km/h) and 125 mph (200 km/h).
  (3) Push the cruise control main switch to - (COAST)/SET.
  (4) Check that the vehicle speed decreases while the cruise control main switch is pushed to - (COAST)/SET, and the vehicle cruises at the newly set speed when the switch is released.
  (5) Push the cruise control main switch to - (COAST)/SET, and then release it immediately. Check that the vehicle speed decreases by approximately 1.0 mph (1.6 km/h) (tap-down control).

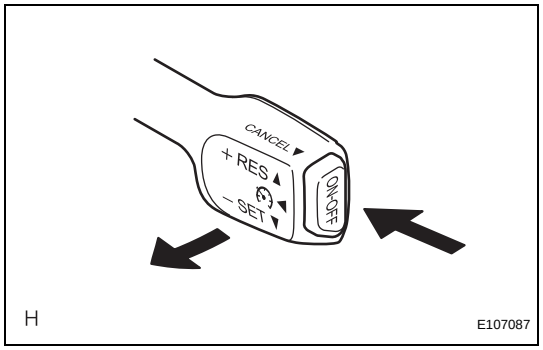

(d) Inspect the CANCEL function.
  (1) Turn the cruise control main switch on.
  (2) Drive at the required speed between 25 mph (40 km/h) and 125 mph (200 km/h).
  (3) Push the cruise control main switch to - (COAST)/SET.
  (4) When performing any one of the following, check that the cruise control system is canceled and that the normal driving mode is reset.
    - Depressing the brake pedal
    - Depressing the clutch pedal (M/T only)
    - The shift lever is moved from the D or 3rd position to any of the N, 2nd , or L positions (A/T only)
    - Turning the cruise control main switch off
    - Pulling the cruise control main switch to CANCEL

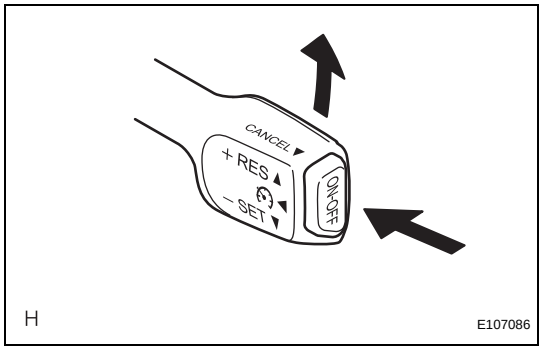

(e) Inspect the RES (RESUME) function.
  (1) Turn the cruise control main switch on.
  (2) Drive at the required speed between 25 mph (40 km/h) and 125 mph (200 km/h).
  (3) Push the cruise control main switch to - (COAST)/SET.
  (4) Cancel the cruise control system by performing any of the above operations (other than turning the main switch off).
  (5) After pushing the cruise control main switch to + (ACCEL)/RES (RESUME) at a driving speed of more than 25 mph (40 km/h), check that the vehicle resumes the speed set prior to the cancellation.

CC

PROBLEM SYMPTOMS TABLE

HINT:
Use the table below to help determine the causes of the problem symptom. The potential cases of the symptoms are listed in order of probability in the "Suspected Area" column of the table. Check each symptom by checking the suspected areas in the order they are listed. Replace parts as necessary.

Cruise Control System

Symptom	Suspected area	See page
Main switch cannot be turned ON (Indicator light on the combination meter does not come on)	Cruise control switch circuit	CC-26
	CRUISE MAIN indicator light circuit	CC-31
	ECM	-
Desired speed cannot be set (Indicator light on the combination meter comes on when the main switch is turned ON, but goes off when operating the "SET" function)	Cruise control switch circuit	CC-26
	ECM	-
Desired speed cannot be set (Indicator light on the combination comes on when the main switch is turned ON and it remains ON, while operating the "SET" function)	Cruise control switch circuit	CC-26
	Stop light switch circuit	CC-19
	Clutch switch circuit (M/T)	CC-23
	Park/neutral position switch circuit (A/T)	AX-6
	Combination meter system	ME-8
	Vehicle speed sensor circuit	CC-18
	ECM	-
While cruise control driving, the set speed is canceled (Indicator light remains ON)	Cruise control switch circuit	CC-26
	Vehicle speed sensor circuit	CC-18
	Stop light switch circuit	CC-19
	Combination meter system	ME-8
	Clutch switch circuit (M/T)	CC-23
	Park/neutral position switch circuit (A/T)	AX-6
	ECM	-
Hunting occurs (Speed is not constant)	Vehicle speed sensor circuit	CC-18
	ECM	-
Speed setting cannot be canceled ("CANCEL" function failure only)	Cruise control switch circuit	CC-26
	ECM	-
DTC is not output, or is output when should not be	DLC3 circuit	CC-32
	ECM	-
Cruise control cannot be canceled when vehicle speed decreases to below low speed limit	Vehicle speed sensor circuit	CC-18
	ECM	-
Cruise control cannot be canceled when brake pedal is depressed	Stop light switch circuit	CC-19
	ECM	-
Cruise control cannot be canceled when shift lever is operated (A/T)	Park/neutral position switch circuit (A/T)	AX-6
	ECM	-
Cruise control cannot be canceled when clutch pedal is depressed (M/T)	Clutch switch circuit (M/T)	CC-23
	ECM	-

TERMINALS OF ECM

1. CHECK ECM

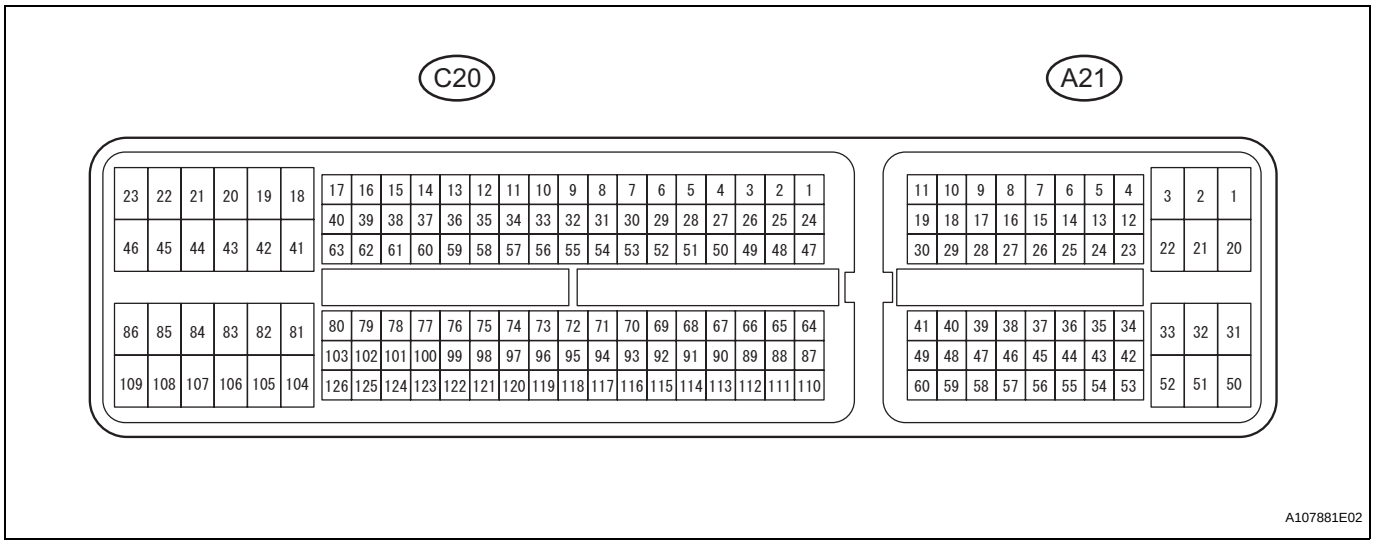

(a) Measure the voltages of the wire harness side connectors.

Standard voltage:

Symbols (Terminals No.)	Wiring Color	Terminal Description	Condition	Specified Condition
TC (A21-27) - E1 (C20-104)	P - W	DTC output signal	Ignition switch ON	10 to 14 V
TC (A21-27) - E1 (C20-104)	P - W	DTC output signal	Ignition switch ON Connect terminals TC and CG of DLC3	Below 2 V
ST1- (A21-35) - E1 (C20-104)	Y - W	Cruise cancel input signal	Ignition switch ON Depress brake pedal	Below 1 V
ST1- (A21-35) - E1 (C20-104)	Y - W	Cruise cancel input signal	Ignition switch ON Release brake pedal	10 to 14 V
STP (A21-36) - E1 (C20-104)	G - W	Stop light switch input signal	Ignition switch ON Depress brake pedal	10 to 14 V
STP (A21-36) - E1 (C20-104)	G - W	Stop light switch input signal	Ignition switch ON Release brake pedal	Below 1 V
CCS (A21-40) - E1 (C20-104)	L - W	Cruise control main switch output signal	Ignition switch ON	10 to 14 V
CCS (A21-40) - E1 (C20-104)	L - W	Cruise control main switch output signal	Ignition switch ON CANCEL switch held ON	6.6 to 10.1 V
CCS (A21-40) - E1 (C20-104)	L - W	Cruise control main switch output signal	Ignition switch ON -/SET switch held ON	4.5 to 7.1 V
CCS (A21-40) - E1 (C20-104)	L - W	Cruise control main switch output signal	Ignition switch ON +/RES switch held ON	2.3 to 4.5 V
CCS (A21-40) - E1 (C20-104)	L - W	Cruise control main switch output signal	Ignition switch ON MAIN switch held ON	Below 1 V
E1 (C20-104) - Body ground	W - Body ground	Ground	Always	Below 1 V
D (C20-56) - E1 (C20-104)	L - W	Clutch switch input signal	Ignition switch ON Depress clutch pedal	Below 1 V
D (C20-56) - E1 (C20-104)	L - W	Clutch switch input signal	Ignition switch ON Release clutch pedal	10 to 14 V
CANH (A21-41) - E1 (C20-104)	L - W	CAN communication line	Ignition switch ON	Pulse generation (see waveform 1)
CANL (A21-49) - E1 (C20-104)	W - W	CAN communication line	Ignition switch ON	Pulse generation (see waveform 2)

If the result is not as specified, there may be a malfunction on the wire harness side.

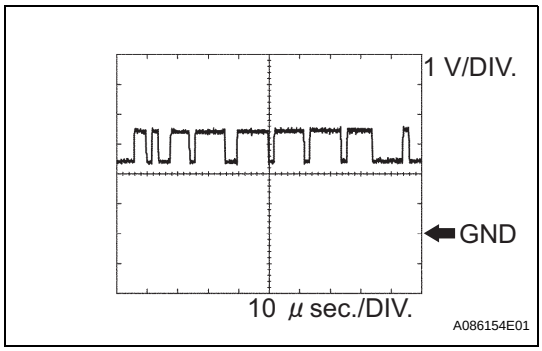

2. WAVEFORM 1(Reference)
CAN communication signal

ECM Terminal Names	Between CANH and E1
Tester Ranges	1 V/DIV, 10 μs/DIV
Conditions	Engine stops and ignition switch ON

HINT:
The waveform varies depending on the CAN communication signal.

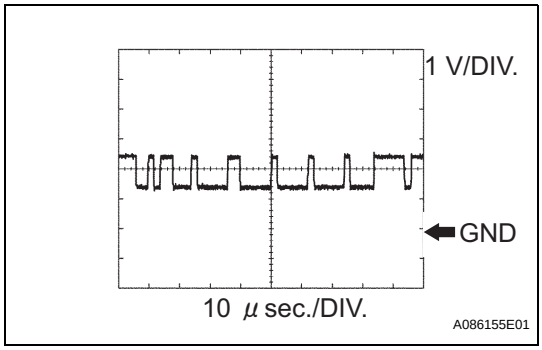

3. WAVEFORM 2(Reference)
CAN communication signal

ECM Terminal Names	Between CANL and E1
Tester Ranges	1 V/DIV, 10 μs/DIV
Conditions	Engine stops and ignition switch ON

HINT:
The waveform varies depending on the CAN communication signal.

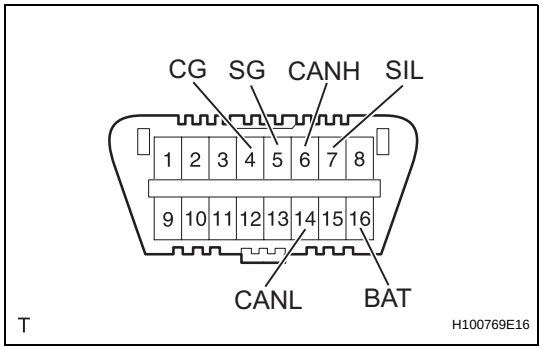

DIAGNOSIS SYSTEM

1. CHECK DLC3

(a) The ECU uses ISO 15765-4 for communication. The terminal arrangement of the DLC3 complies with SAE J1962 and matches the ISO 15765-4 format.

Symbols (Terminal No.)	Terminal Description	Condition	Specified Condition
SIL (7) - SG (5)	Bus " +" line	During transmission	Pulse generation
CG (4) - Body ground	Chassis ground	Always	Below 1 Ω
SG (5) - Body ground	Signal ground	Always	Below 1 Ω
BAT (16) - Body ground	Battery positive	Always	11 to 14 V
CANH (6) - CANL (14)	CAN bus line	Ignition switch OFF*	54 to 69 Ω
CANH (6) - CG (4)	HIGH-level CAN bus line	Ignition switch OFF*	200 Ω or higher
CANL (14) - CG (4)	LOW-level CAN bus line	Ignition switch OFF*	200 Ω or higher
CANH (6) - BAT (16)	HIGH-level CAN bus line	Ignition switch OFF*	6 kΩ or higher
CANL (14) - BAT (16)	LOW-level CAN bus line	Ignition switch OFF*	6 kΩ or higher

NOTICE:
***: Before measuring the resistance, leave the vehicle as is for at least 1 minute and do not operate the ignition switch, any other switches or the doors.**
If the result is not as specified, the DLC3 may have a malfunction. Repair or replace the harness and connector.

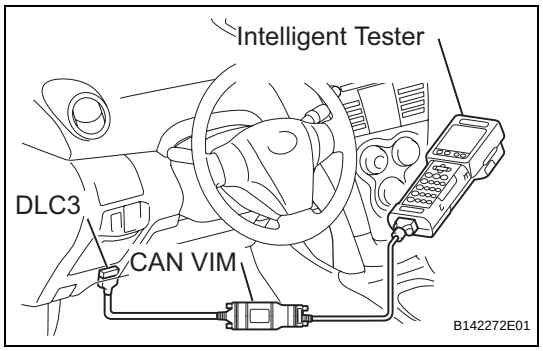

HINT:
Connect the cable of the intelligent tester to the CAN VIM, connect the CAN VIM to the DLC3, turn the ignition switch ON and attempt to use the tester. If the display indicates that a communication error has occurred, there is a problem either with the vehicle or with the tester.

- If communication is normal when the tester is connected to another vehicle, inspect the DLC3 of the original vehicle.
- If communication is still not possible when the tester is connected to another vehicle, the problem is probably in the tester itself. Consult the Service Department listed in the tester's instruction manual.

2. CHECK INDICATOR

(a) Turn the ignition switch to the ON position.

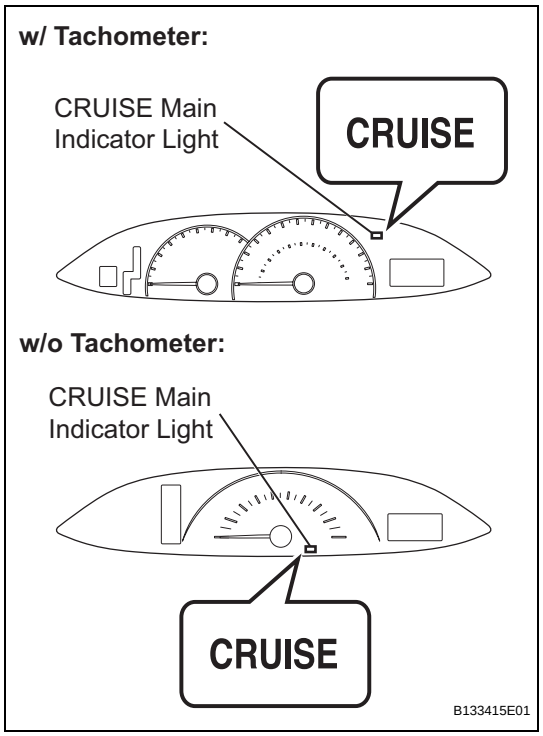

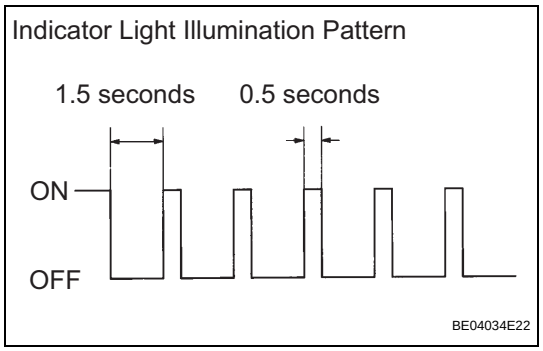

(b) Check that the CRUISE MAIN indicator light comes on when the cruise control main switch ON-OFF button is pushed on, and that the indicator light goes off when the ON-OFF button is pushed off.
HINT:
If there is a problem with the ON/OFF illumination of the indicator light, inspect the cruise main indicator light circuit (See page CC-31).
HINT:
If a malfunction occurs in the vehicle speed sensor, stop light switch assembly or other related parts during cruise control driving, the ECM actuates AUTO CANCEL of the cruise control. Then the CRUISE MAIN indicator light starts to blink, to inform the driver of the malfunction. At the same time, data of the malfunction is stored as a diagnostic trouble code (DTC).

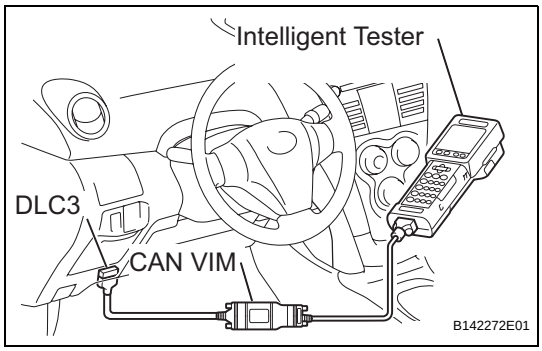

DTC CHECK / CLEAR

1. DTC CHECK

(a) Connect the intelligent tester with CAN VIM to the DLC3.

(b) Turn the ignition switch ON.

(c) Read the DTCs by following the prompts on the tester's screen.

HINT:

Refer to the intelligent tester operator's manual for further details.

2. DTC CLEAR

(a) Connect the intelligent tester with CAN VIM to the DLC3.

(b) Turn the ignition switch ON.

(c) Erase the DTCs by following the prompts on the tester's screen.

HINT:

Refer to the intelligent tester operator's manual for further details.

FAIL-SAFE CHART

HINT:
If the following conditions are detected while the cruise control is in operation, the system clears the stored vehicle speed in the ECM and cancels the cruise control operation.

Vehicle Condition	Auto Cancel Condition	Re-operation Condition
CRUISE main indicator light blinks	• There is open or short in stop light switch circuit • There is problem with vehicle speed signal • There is problem with throttle position sensor and motor	Turn cruise control main switch on again
CRUISE main indicator light blinks	• There is problem with input circuit of stop light switch circuit • There is problem with cancel circuit	• Turn cruise control main switch on again • Turn engine switch off then on again
CRUISE main indicator light remains on (Cruise control is canceled)	• Vehicle speed is lower than low speed limit (approximately 25 km/h (40 mph)) while running with cruise control on	Push cruise control main switch to + (ACCEL)/RES (RESUME)
	• Vehicle speed is lower than stored speed by approximately 10 km/h (16 mph) or more	Push cruise control main switch to - (COAST)/SET

DATA LIST / ACTIVE TEST

1. READ DATA LIST

(a) While the intelligent tester is connected to the DLC3 with the ignition switch in the ON position, the CRUISE CONTROL data list can be displayed. Follow the prompts on the tester screen to access the data list.

ECM (Cruise Control System)

Item	Measurement Item / Display (Range)	Normal Condition	Diagnostic Note
VEHICLE SPD	Vehicle speed / min.: 0 km/h (0 mph) max.: 255 km/h (158 mph)	Actual vehicle speed	-
MEMORY SPD	Vehicle speed / min.: 0 km/h (0 mph) max.: 255 km/h (158 mph)	Actual vehicle speed stored in memory	-
THROTTLE	Throttle operating angle / min.: 0 deg. max.: 125 deg.	Actual demanded throttle angle	-
CCS OPER STATUS	Cruise control / ON or OFF	ON: Cruise control is SET OFF: Cruise control is UNSET	-
CRUISE CONTROL	Cruise control / ON or OFF	ON: Cruise control is SET OFF: Cruise control is UNSET	-
CCS INDICATOR M	Switch indicator (Main CPU) / ON or OFF	ON: Switch indicator (Main CPU) is SET OFF: Switch indicator (Main CPU) is UNSET	-
CCS INDICATOR S	Switch indicator (Sub CPU) / ON or OFF	ON: Switch indicator (Sub CPU) is SET OFF: Switch indicator (Sub CPU) is UNSET	-
CCS READY M	Switch ready (Main CPU) / ON or OFF	ON: Switch ready (Main CPU) is SET OFF: Switch ready (Main CPU) is UNSET	-
CCS READY S	Switch ready (Sub CPU) / ON or OFF	ON: Switch ready (Sub CPU) is SET OFF: Switch ready (Sub CPU) is UNSET	-
MAIN SW (MAIN)	Main switch (Main CPU) / ON or OFF	ON: Main switch (Main CPU) is SET OFF: Main switch (Main CPU) is UNSET	-
MAIN SW (SUB)	Main switch (Sub CPU) / ON or OFF	ON: Main switch (Sub CPU) is SET OFF: Main switch (Sub CPU) is UNSET	-
CANCEL SW	CANCEL switch / ON or OFF	ON: CANCEL switch is SET OFF: CANCEL switch is UNSET	-
SET/COAST SW	- / SET switch / ON or OFF	ON: - / SET switch is SET OFF: - / SET switch is UNSET	-
RES/ACC SW	+ / RES switch / ON or OFF	ON: + / RES switch is SET OFF: + / RES switch is UNSET	-
STP LIGHT SW M	Stop light switch signal (Main CPU) / ON or OFF	ON: Brake pedal depressed OFF: Brake pedal released	-
STP LIGHT SW S1	Stop light switch signal (Sub CPU) / ON or OFF	ON: Brake pedal depressed OFF: Brake pedal released	-
STP LIGHT SW S2	Stop light switch signal (Sub CPU) / ON or OFF	ON: Brake pedal depressed OFF: Brake pedal released	-

Item	Measurement Item / Display (Range)	Normal Condition	Diagnostic Note
SHIFT D POS	Shift D position / ON or OFF (A/T)	ON: Shift is D or 3 position OFF: Shift is except D or 3 position	-
	Clutch switch/ ON or OFF (M/T)	ON: Clutch pedal released OFF: Clutch pedal depressed	-

DIAGNOSTIC TROUBLE CODE CHART

If a trouble code is indicated while checking DTCs, inspect the circuit listed for that code in the table below, and proceed to the applicable page.

Cruise Control System

DTC No.	Detection Item	Trouble Area	See page
P0500	Vehicle Speed Sensor Circuit Malfunction	- Combination meter assembly - Vehicle speed sensor - Vehicle speed sensor signal circuit - ECM	CC-18
P0503	Vehicle Speed Sensor Circuit Malfunction	- Combination meter assembly - Veicle speed sensor - Vehicle speed sensor signal circuit - ECM	CC-18
P0571	Stop Light Switch Circuit Malfunction	- Stop light switch assembly - Stop light switch assembly circuit - ECM	CC-19
P0607	Input Signal Circuit Malfunction	- ECM	CC-22

DTC	P0500	Vehicle Speed Sensor Circuit Malfunction

DTC	P0503	Vehicle Speed Sensor Circuit Malfunction

DESCRIPTION

Refer to DTC P0500 (see page ES-213).

DTC No.	DTC Detection Conditions	Trouble Areas
P0500	This trouble code is output when the vehicle speed signal from the vehicle speed sensor is cut for 0.14 seconds or more while the cruise control is in operation.	• Combination meter assembly • Vehicle speed sensor • Vehicle speed sensor signal circuit • ECM
P0503	Momentary interruption and noise are detected when a rapid change of vehicle speed occurs while the cruise control is in operation.	• Combination meter assembly • Vehicle speed sensor • Vehicle speed sensor signal circuit • ECM

WIRING DIAGRAM

Refer to DTC P0500 (see page ES-215).

INSPECTION PROCEDURE

Refer to DTC P0500 (see page ES-215).

DTC	P0571	Stop Light Switch Circuit Malfunction

DESCRIPTION

The cruise control system cancels cruising when the ECM detects that the brake pedal is depressed during cruise control driving. The stop light switch assembly sends signals to the ECM according to the brake pedal conditions. When the brake pedal is released, terminal ST1- is the positive (+) battery voltage, and terminal STP voltage is below 1 V. While the brake pedal is depressed, terminal ST1- is below 1 V, and STP is positive (+) battery voltage. During braking, the ECM cancels cruise control as one of the manual cancel functions.
The ECM outputs this trouble code when the voltage of terminals ST1- and STP are both below 1 V for 0.5 seconds or more at the same time.
The fail-safe function operates to enable normal driving even if there is a malfunction in the stop light signal circuit.

DTC No.	DTC Detected Conditions	Trouble Areas
P0571	ECM detects a malfunction of the stop light switch circuit under both of the following conditions. • Voltage of terminal STP is below 1 V for 0.5 seconds or more. • Voltage of terminal ST1- is below 1 V for 0.5 seconds or more.	• Stop light switch assembly • Stop light switch assembly circuit • ECM

WIRING DIAGRAM

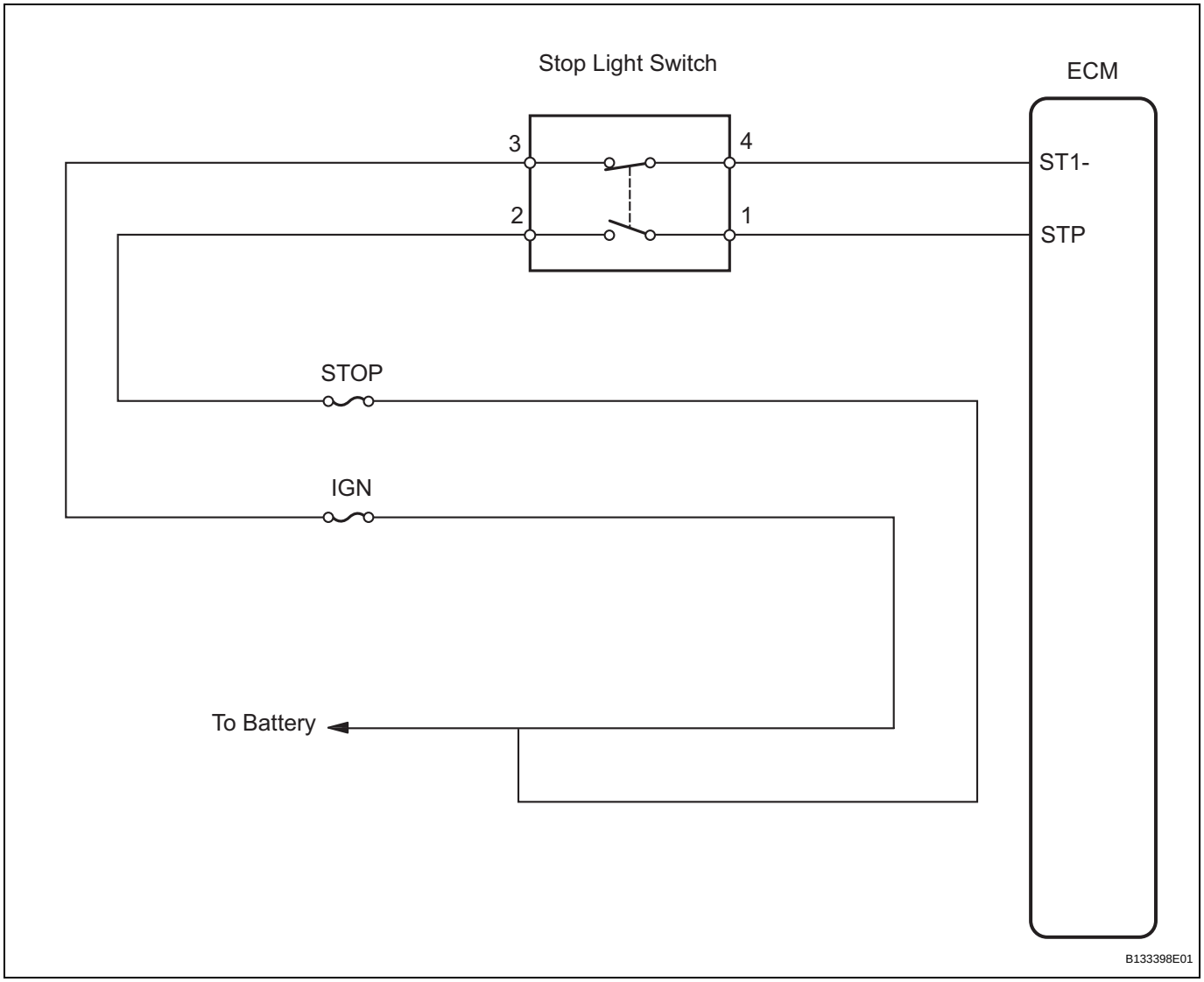

CC

INSPECTION PROCEDURE

1	INSPECT STOP LIGHT SWITCH OPERATION

(a) Check that the stop lights come on while the brake pedal is depressed, and go off when the brake pedal is released.

OK

Brake Pedal Condition	Stop Light Condition
Depressed	ON
Released	OFF

NG → **INSPECT STOP LIGHT SWITCH CIRCUIT**

OK

2 INSPECT STOP LIGHT SWITCH ASSEMBLY

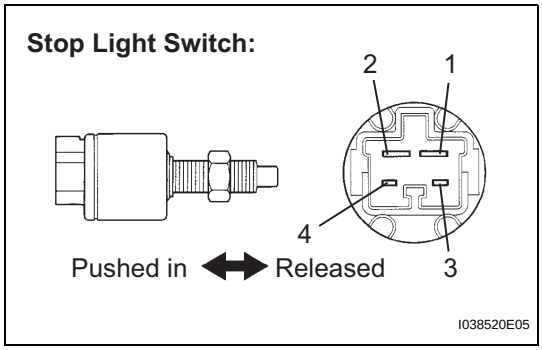

(a) Disconnect the stop light switch assembly connector.
(b) Measure the resistance.
Standard resistance

Tester Connection	Switch Condition	Stop Light Condition
1 - 2	Switch pin free (Brake pedal depressed)	Below 1Ω
3 - 4	Switch pin free (Brake pedal depressed)	10 kΩ or higher
1 - 2	Switch pin pushed in (Brake pedal released)	10 kΩ or higher
3 - 4	Switch pin pushed in (Brake pedal released)	Below 1Ω

(c) Reconnect the stop light switch assembly connector.

NG → **REPLACE STOP LIGHT SWITCH ASSEMBLY**

OK

3 INSPECT ECM (STP SIGNAL)

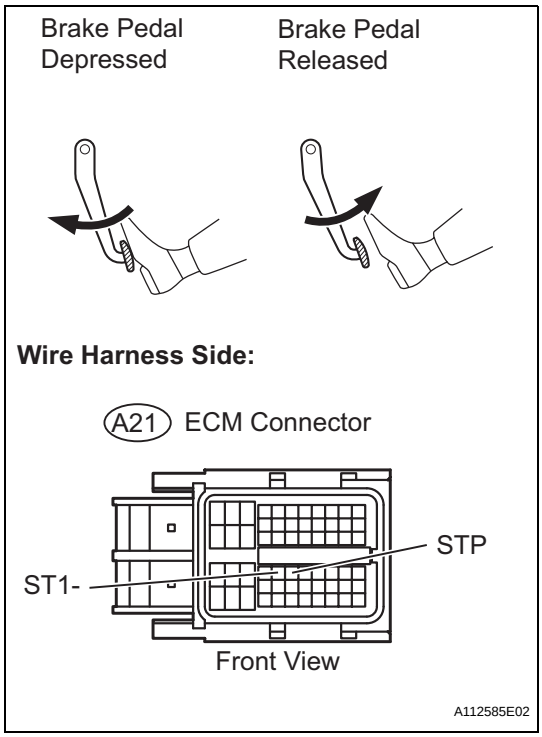

(a) Disconnect the A21 ECM connector.
(b) Turn the ignition switch to the ON position.
(c) Measure the voltage.
Standard voltage

Tester Connection	Brake Pedal Condition	Specified Condition
STP (A21-36) - Body ground	Depressed	10 to 14 V
STP (A21-36) - Body ground	Released	Below 1V
ST1- (A21-35) - Body ground	Depressed	Below 1V
ST1- (A21-35) - Body ground	Released	10 to 14 V

(d) Reconnect the ECM connector.

NG → **REPAIR OR REPLACE HARNESS OR CONNECTOR (STOP LIGHT SWITCH ASSEMBLY - ECM)**

OK

REPLACE ECM

DTC	P0607	Input Signal Circuit Malfunction

DESCRIPTION

This DTC indicates the internal abnormalities of the ECM.

DTC No.	DTC Detection condition	Trouble Area
P0607	The ECM has a supervisory CPU and a control ECU inside. • When each input STP signal is different for 0.15 seconds or more, this trouble code is output. • This trouble code is output after 0.4 seconds has passed from the time the cruise cancel input signal (STP input) is input into the ECM.	ECM

HINT:
When a trouble code is detected, fail-safe continues until the ignition switch is turned off.

INSPECTION PROCEDURE

1	REPLACE ECM

NEXT

END

Clutch Switch Circuit

DESCRIPTION

Clutch switch circuit inspection is necessary for M/T vehicles.
When the clutch pedal is released, the ECM receives the positive (+) battery voltage through the ECU-IG fuse and ignition switch. While the clutch pedal is depressed, the clutch switch assembly sends a signal to terminal D of the ECM. The ECM cancels cruise control when terminal D receives the signal (voltage of below 1 V).

WIRING DIAGRAM

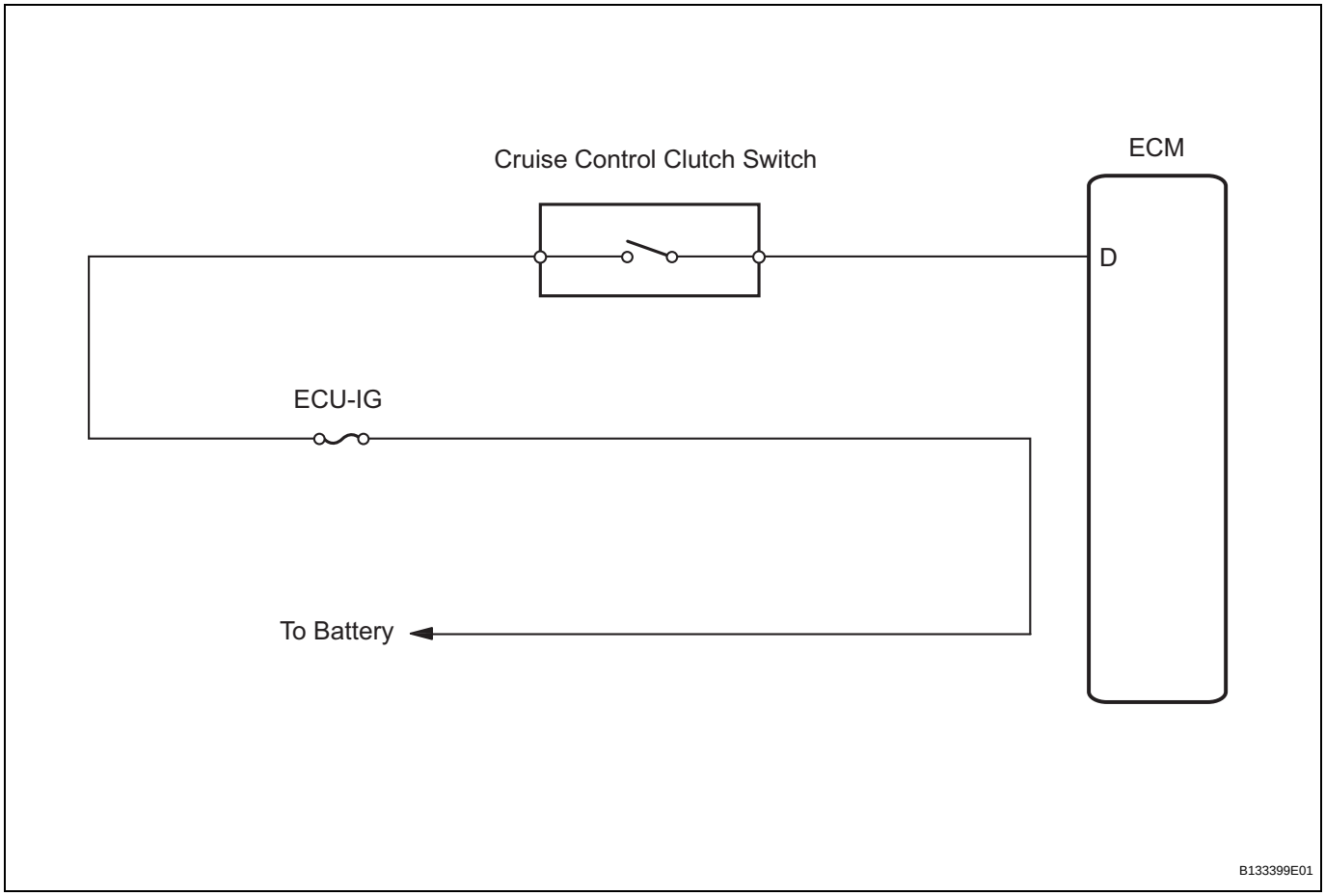

INSPECTION PROCEDURE

1 CHECK HARNESS AND CONNECTOR (ECM - BATTERY)

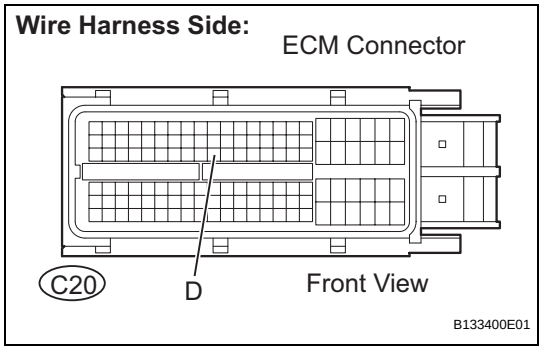

(a) Disconnect the C20 ECM connector.
(b) Turn the ignition switch to the ON position.
(c) Measure the voltage.

Standard voltage

Tester Connection	Clutch Pedal Condition	Specified Condition
D (C20-56) - Body ground	Depressed	Below 1 V
D (C20-56) - Body ground	Released	10 to 14 V

(d) Reconnect the ECM connector.

OK → **PROCEED TO NEXT CIRCUIT INSPECTION SHOWN IN PROBLEM SYMPTOMS TABLE**

NG

2 INSPECT CLUTCH SWITCH ASSEMBLY

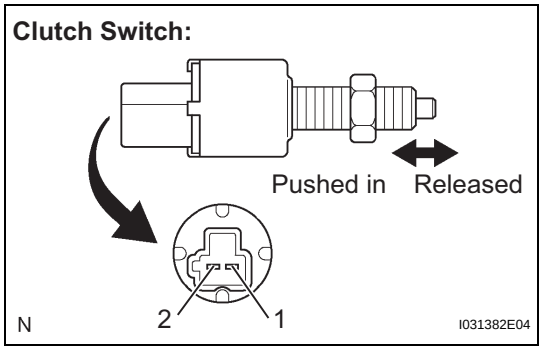

(a) Disconnect the clutch switch connector.
(b) Measure the resistance.

Standard resistance

Tester Connection	Clutch Pedal Condition	Specified Condition
1 - 2	Switch pin free (Clutch pedal depressed)	10 kΩ or higher
1 - 2	Switch pin pushed in (Clutch pedal released)	Below 1 Ω

(c) Reconnect the clutch switch connector.

NG → **REPLACE CLUTCH SWITCH ASSEMBLY**

OK

CC

3	CHECK HARNESS AND CONNECTOR (CLUTCH SWITCH ASSEMBLY - ECM)

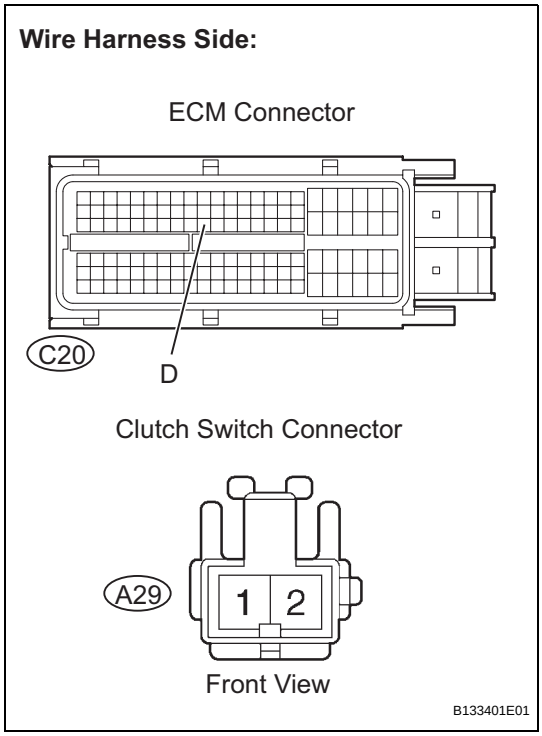

(a) Disconnect the C20 ECM connector.
(b) Disconnect the A29 clutch switch connector.
(c) Measure the resistance.
Standard resistance

Tester Connection	Specified Condition
A29-2 - D (C20-56)	Below 1 Ω
A29-2 - D (C20-56) - Body ground	10 kΩ or higher

(d) Reconnect the clutch switch connector.
(e) Reconnect the ECM connector.

NG → **REPAIR OR REPLACE HARNESS OR CONNECTOR (CLUTCH SWITCH ASSEMBLY - ECM)**

OK

REPAIR OR REPLACE HARNESS OR CONNECTOR (CLUTCH SWITCH ASSEMBLY - BATTERY)

Cruise Control Switch Circuit

DESCRIPTION

The cruise control main switch operates 7 functions: SET, - (COAST), TAP-DOWN, RES (RESUME), + (ACCEL), TAP-UP, and CANCEL. The SET, TAP-DOWN, and - (COAST) functions, and the RES (RESUME), TAP-UP, and + (ACCEL) functions are operated with the same switch. The cruise control main switch is an automatic return type switch which turns on only while operated in the directions of the arrows and turns off when it is released. The internal contact point of the cruise control main switch is turned on with the switch operation. Then the ECM reads the voltage value that has been changed by the switch operation to control SET, - (COAST), RES (RESUME), + (ACCEL), and CANCEL.

WIRING DIAGRAM

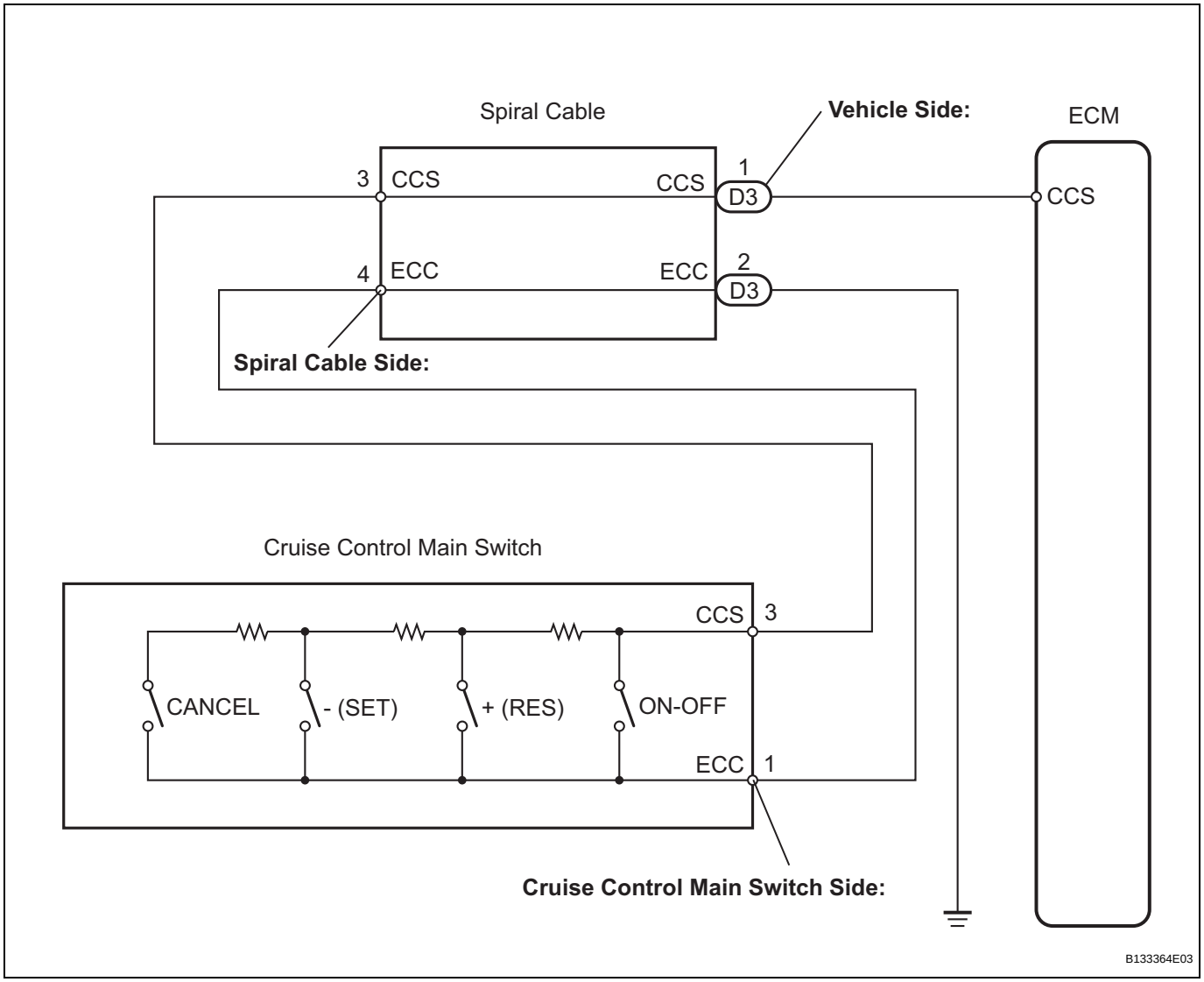

INSPECTION PROCEDURE

1	READ VALUE OF INTELLIGENT TESTER

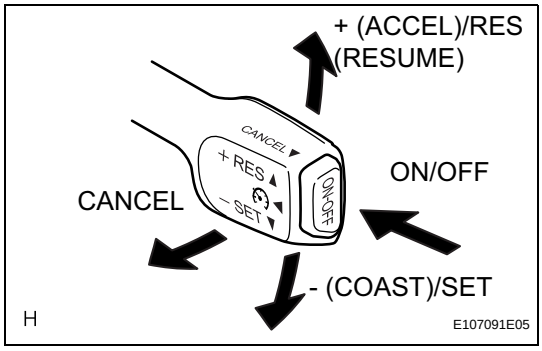

(a) Connect the intelligent tester to the DLC3.
(b) Turn the ignition switch ON and turn the intelligent tester main switch on.
(c) Check the DATA LIST for proper functioning of the cruise control main switch.

CC

ECM (Cruise Control System)

Item	Measurement Item / Display (Range)	Normal Condition	Diagnostic Note
MAIN SW (MAIN)	Main switch (Main CPU) / ON or OFF	ON: Main switch (Main CPU) is ON OFF: Main switch (Main CPU) is OFF	-
MAIN SW (SUB)	Main switch (Sub CPU) / ON or OFF	ON: Main switch (Sub CPU) is ON OFF: Main switch (Sub CPU) is OFF	-
CANCEL SW	CANCEL switch / ON or OFF	ON: CANCEL switch is ON OFF: CANCEL switch is OFF	-
SET/COAST SW	- / SET switch / ON or OFF	ON: - / SET switch is ON OFF: - / SET switch is OFF	-
RES/ACC SW	+ / RES switch / ON or OFF	ON: + / RES switch is ON OFF: + / RES switch is OFF	-

OK:
When the cruise control main switch is operated, the display changes as shown above.

Result:

Result	Proceed to
OK	A
NG (All items are defective)	B
NG (1 to 5 items are defective)	C

A → **PROCEED TO NEXT CIRCUIT INSPECTION SHOWN IN PROBLEM SYMPTOMS TABLE**

C → **REPLACE CRUISE CONTROL MAIN SWITCH**

B

2 INSPECT CRUISE CONTROL MAIN SWITCH

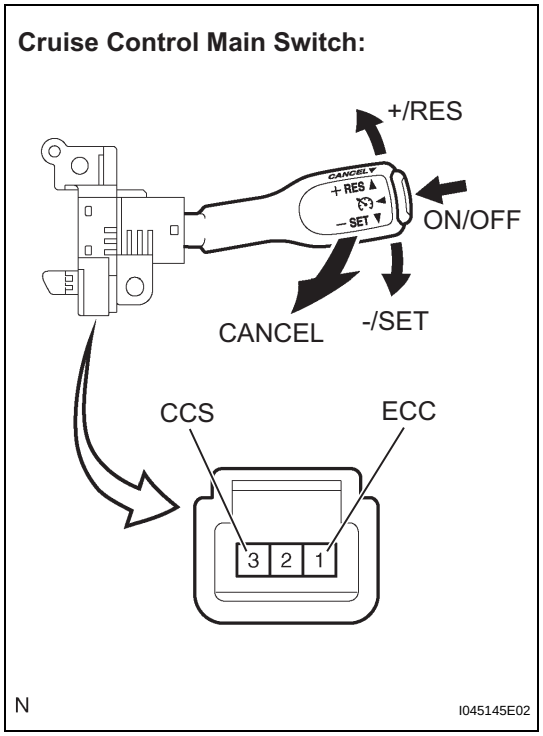

(a) Remove the cruise control main switch.
(b) Measure the resistance.

Standard resistance

Tester Connection	Switch Condition	Specified Condition
1 - 3	cruise control switch neutral	10 kΩ or higher
	cruise control switch ON	Below 1 Ω
	cruise control switch OFF	10 kΩ or higher
	+/RES	216 to 264 Ω
	-/SET	567 to 693 Ω
	CANCEL	1,386 to 1,694 Ω

(c) Reinstall the cruise control main switch.

NG → **REPLACE CRUISE CONTROL MAIN SWITCH**

OK

3 CHECK HARNESS AND CONNECTOR (CRUISE CONTROL MAIN SWITCH - SPIRAL CABLE)

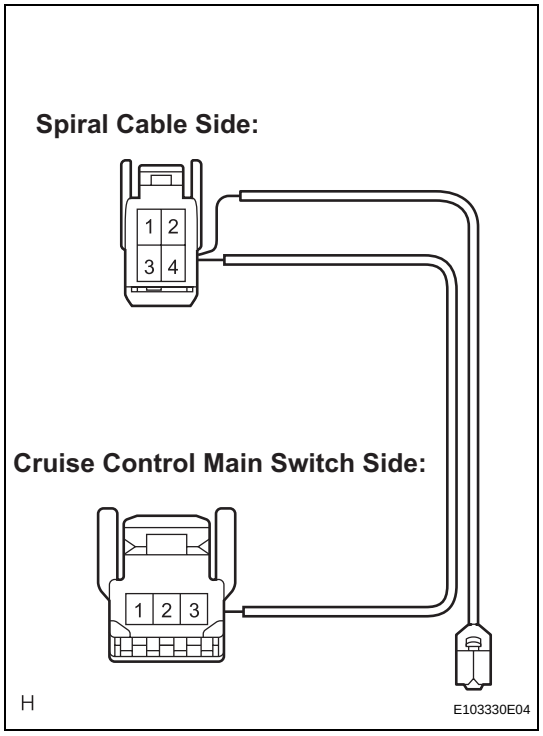

(a) Disconnect the spiral cable side connector.
(b) Disconnect the cruise control main switch side connector.
(c) Measure the resistance.

Standard resistance

Tester Connection	Specified Condition
Terminal 1 (ECC) main switch side - Terminal 4 (ECC) spiral cable side	Below 1 Ω
Terminal 3 (CCS) main switch side - Terminal 3 (CCS) spiral cable side	Below 1 Ω

(d) Reconnect the spiral cable side connector.
(e) Reconnect the cruise control main switch side connector.

NG → **REPAIR OR REPLACE HARNESS OR CONNECTOR**

CC

OK

4	CHECK SPIRAL CABLE

NOTICE:
The spiral cable is an important part of the SRS airbag system. Incorrect removal or installation of the spiral cable may prevent the airbag from deploying. Be sure to read the page shown in the brackets. (See page RS-1)

(a) Remove the spiral cable.

CC

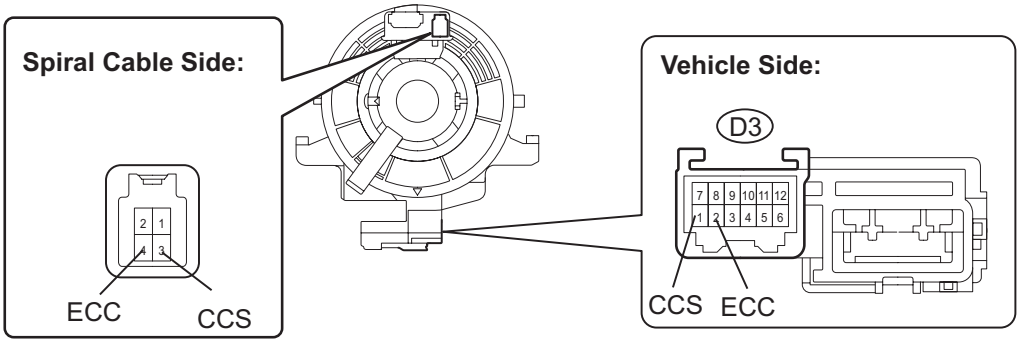

E124662E05

(b) Measure the resistance.

Standard resistance

Tester Connection	Specified Condition
Terminal 3 (CCS) main switch side - CCS (D3-1)	Below 1 Ω
Terminal 4 (ECC) main switch side - ECC (D3-2)	Below 1 Ω

HINT:
The spiral cable makes a maximum of approximately 5 rotations.

(c) Reinstall the spiral cable.

NG → REPLACE SPIRAL CABLE

OK

5	CHECK HARNESS AND CONNECTOR (SPIRAL CABLE - ECM AND BODY GROUND)

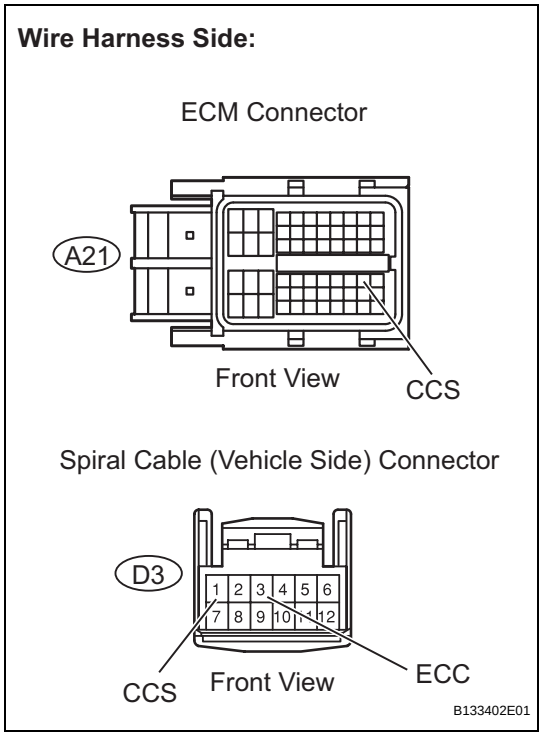

(a) Disconnect the A21 ECM connector.
(b) Disconnect the D3 spiral cable (vehicle side) connector.
(c) Measure the resistance.

Standard resistance

Tester Connection	Specified Condition
A21-40 (CCS) - D3-1 (CCS)	Below 1 Ω
A21-40 (CCS) or D3-1 (CCS) - Body ground	10 kΩ or higher
D3-2 (ECC) - Body ground	Below 1 Ω

(d) Reconnect the ECM connector.
(e) Reconnect the spiral cable (vehicle side) connector.

NG → **REPAIR OR REPLACE HARNESS OR CONNECTOR**

OK

REPLACE ECM

CC

Cruise Main Indicator Light Circuit

DESCRIPTION

When the cruise control main switch is turned off, cruise control does not operate.

WIRING DIAGRAM

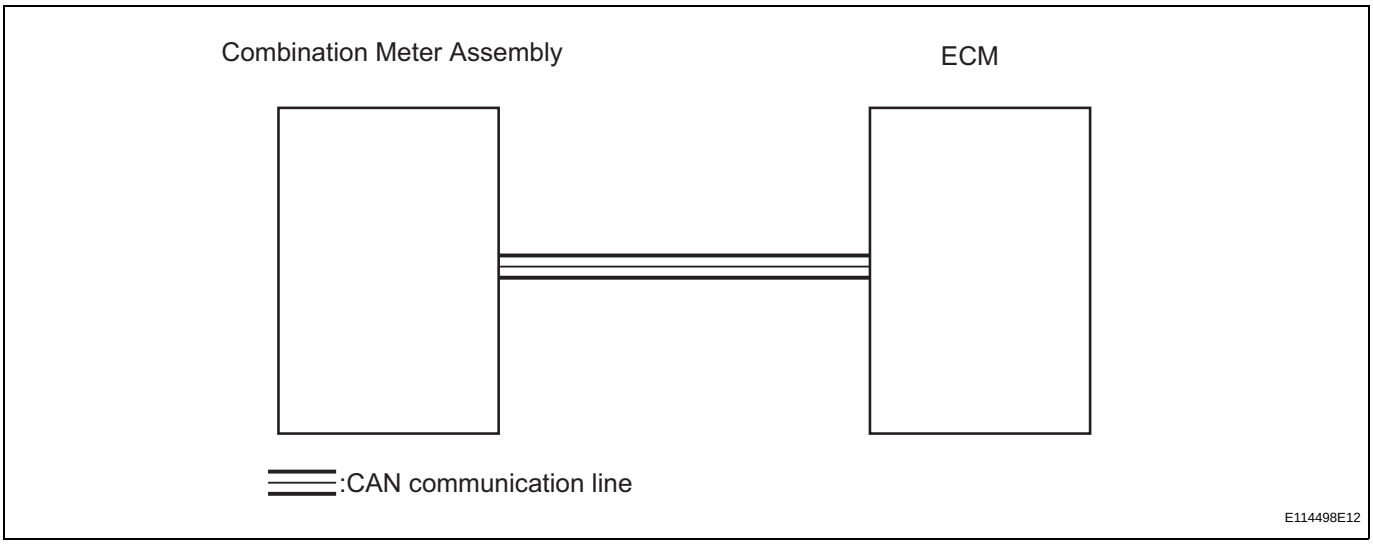

INSPECTION PROCEDURE

Refer to HOW TO PROCEED WITH TROUBLESHOOTING (see page ME-72).
HINT:
If DTC U0100 has been stored, troubleshoot the CAN communication system first.

TC and CG Terminal Circuit

DESCRIPTION

The DLC3 circuit enables reading of Diagnostic Trouble Codes (DTCs) without using intelligent testers by connecting terminals TC and CG of the DLC3 connector.
Stored DTCs are displayed in blinking patterns of the CRUISE MAIN indicator light located on the combination meter.

WIRING DIAGRAM

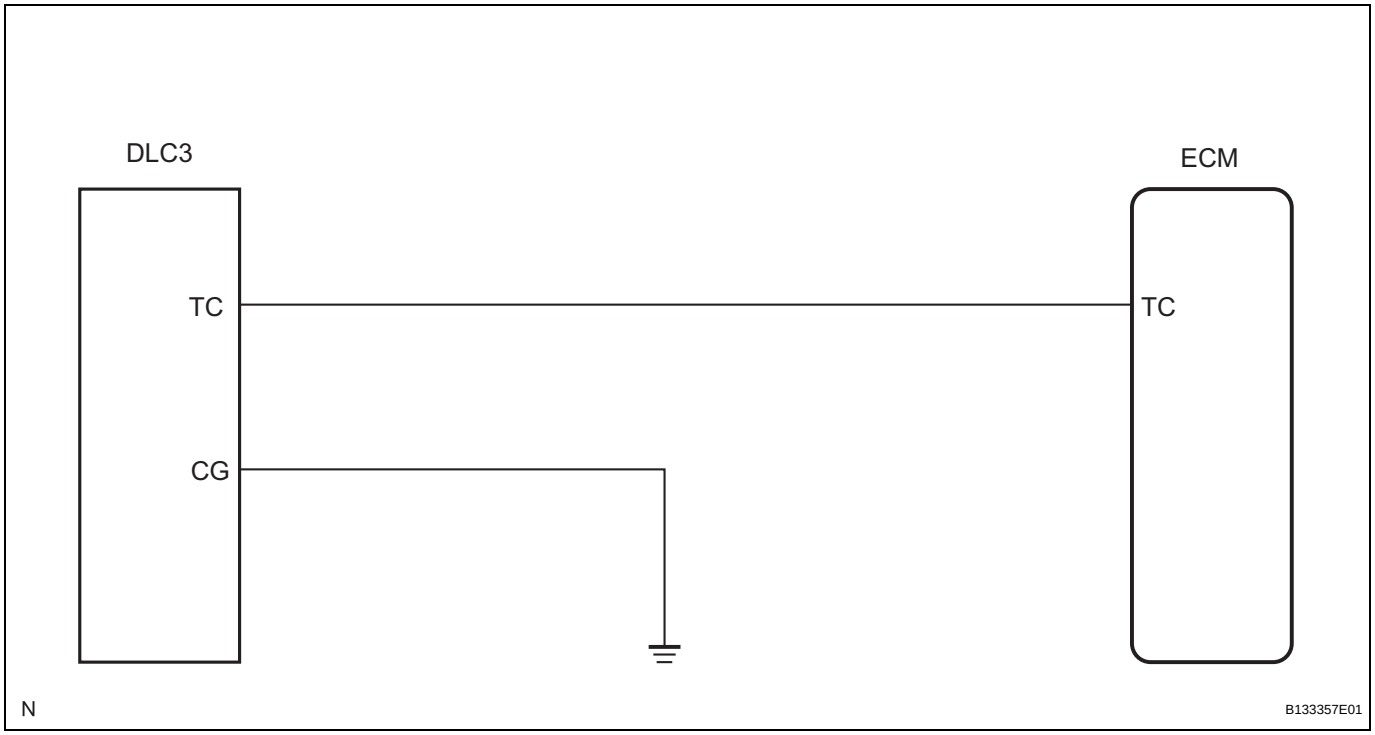

HINT:
When a particular warning light blinks continuously, a ground short in the wiring of terminal TC of the DLC3 or an internal ground short in the relevant ECU is suspected.

INSPECTION PROCEDURE

1 CHECK HARNESS AND CONNECTOR (TC of DLC3 - ECM)

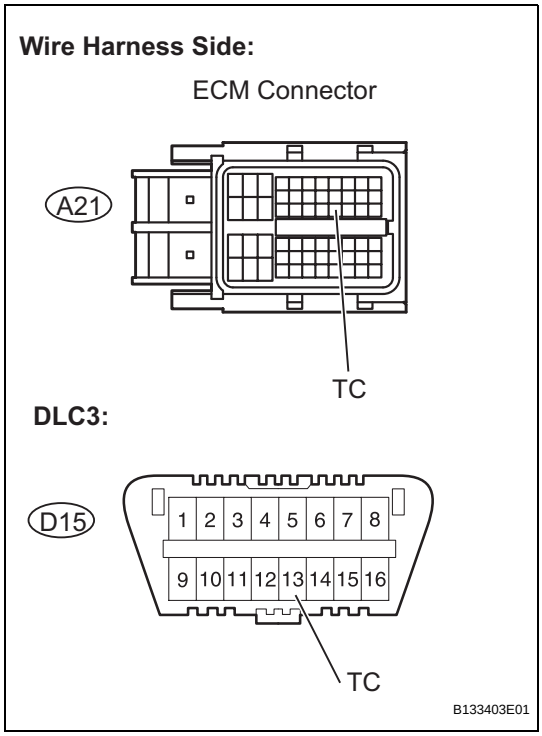

(a) Disconnect the A21 connector of the ECM.
(b) Measure the resistance.
Standard resistance

Tester Connection	Specified Condition
TC (D15-13) - TC (A21-27)	Below 1 Ω

(c) Reconnect the ECM connector.

NG → **REPAIR OR REPLACE HARNESS OR CONNECTOR (TC of DLC3 - ECM)**

OK

2 CHECK HARNESS AND CONNECTOR (TC of DLC3 - BODY GROUND)

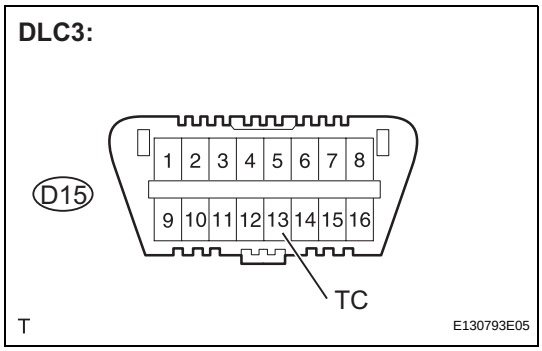

(a) Measure the resistance.
Standard resistance

Tester Connection	Specified Condition
TC (D15-13) - Body ground	10 kΩ or higher

NG → **REPAIR OR REPLACE HARNESS OR CONNECTOR (TC CIRCUIT)**

OK

3	CHECK HARNESS AND CONNECTOR (CG of DLC3 - BODY GROUND)

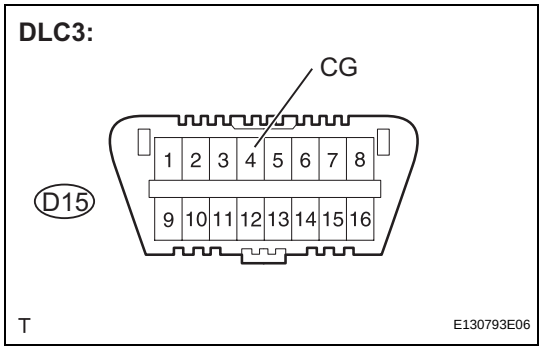

(a) Measure the resistance.

Standard resistance

Tester Connection	Specified Condition
CG (D15-4) - Body ground	Below 1 Ω

NG → **REPAIR OR REPLACE HARNESS OR CONNECTOR (CG of DLC3 - BODY GROUND)**

OK

REPLACE ECM

CC

CRUISE CONTROL MAIN SWITCH

COMPONENTS

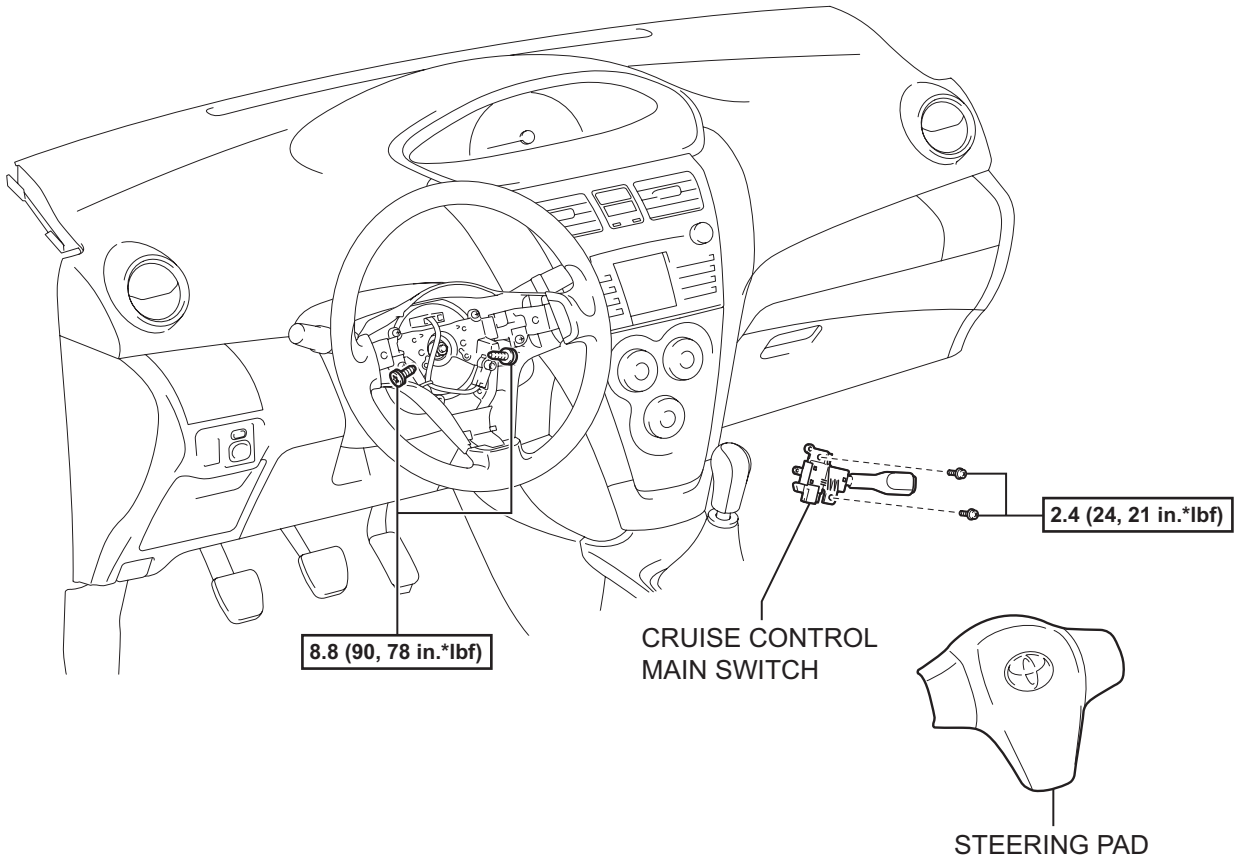

N*m (kgf*cm, ft*lbf) : Specified torque

P

E116825E01

REMOVAL

1. DISCONNECT CABLE FROM NEGATIVE BATTERY TERMINAL

Wait for at least 90 seconds after disconnecting the cable to prevent the airbag from working.

2. REMOVE STEERING PAD (See page RS-309)

3. REMOVE CRUISE CONTROL MAIN SWITCH

(a) Disconnect the connector.

(b) Remove the 2 screws and remove the cruise control main switch.

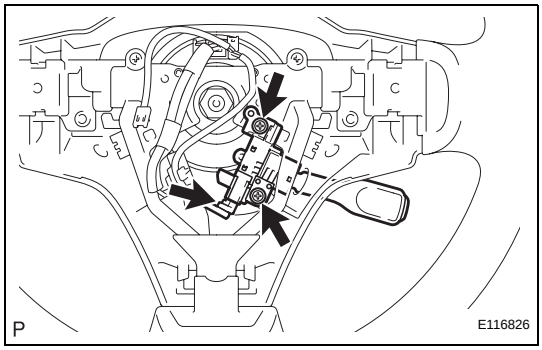

INSPECTION

1. INSPECT CRUISE CONTROL MAIN SWITCH

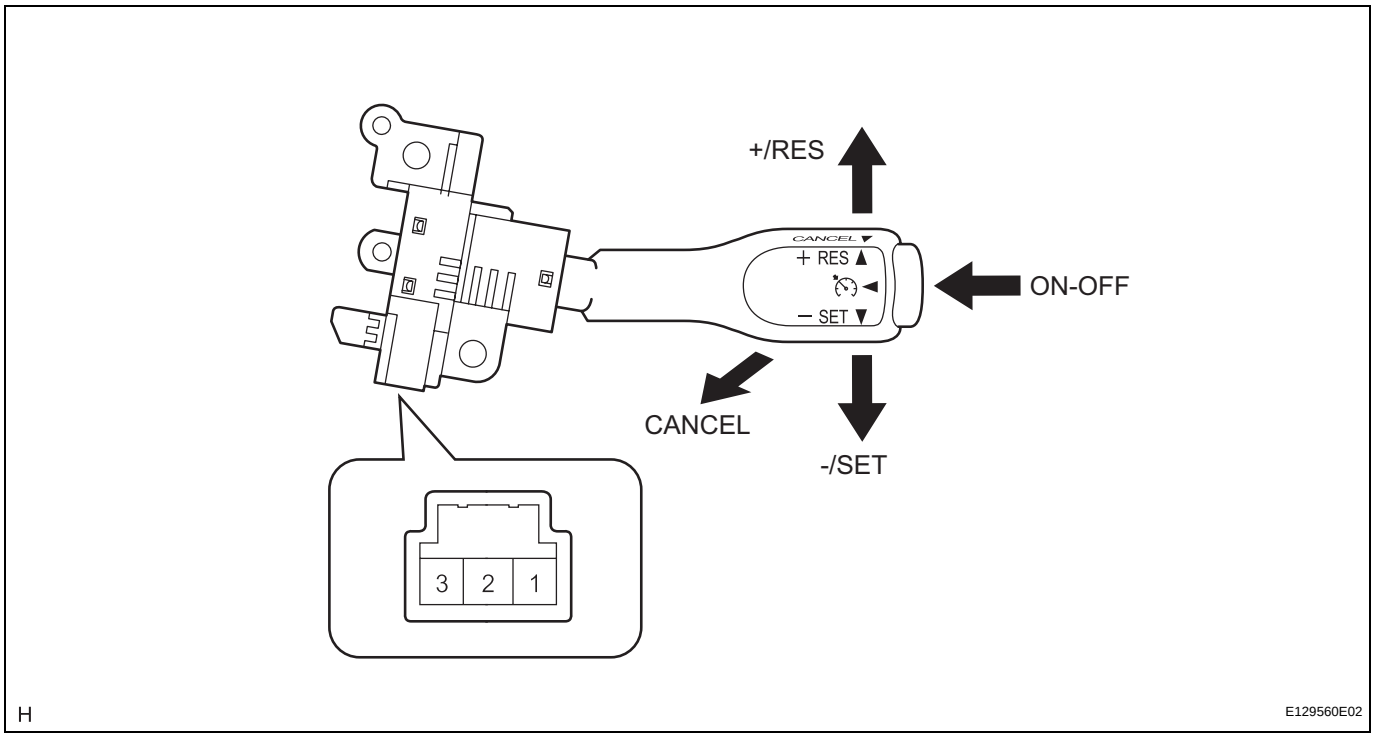

(a) Measure the resistance and check the results in accordance the value(s) in the table below.

Standard resistance

Tester Connection	Switch Condition	Specified Condition
1(ECC) - 3(CCS)	Neutral	10 kΩ or higher
1(ECC) - 3(CCS)	+ /RES	216 to 264Ω
1(ECC) - 3(CCS)	- /SET	567 to 693Ω
1(ECC) - 3(CCS)	CANCEL	1,386 to 1,694Ω
1(ECC) - 3(CCS)	Main Switch off	10kΩ or higher
1(ECC) - 3(CCS)	Main Switch on	Below 1Ω

If the result is not as specified, replace the cruise control main switch.

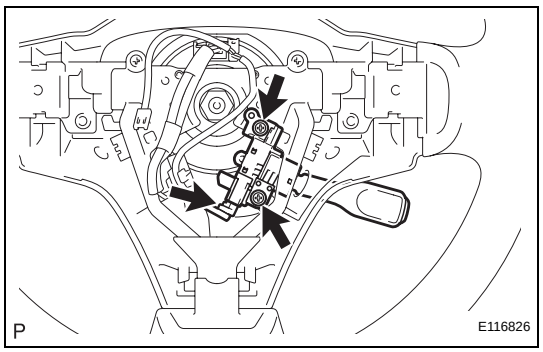

INSTALLATION

1. INSTALL CRUISE CONTROL MAIN SWITCH

(a) Install the cruise control main switch with the 2 screws.
Torque: 2.4 N*m (24 kgf*cm, 21 in.*lbf)

(b) Connect the connector.

2. INSTALL STEERING PAD (See page RS-310)

3. CONNECT CABLE TO NEGATIVE BATTERY TERMINAL
Torque: 5.4 N*m (55 kgf*cm, 48 in.*lbf)

4. INSPECT SRS WARNING LIGHT
(See page RS-31)

CC

CLUTCH SWITCH

COMPONENTS

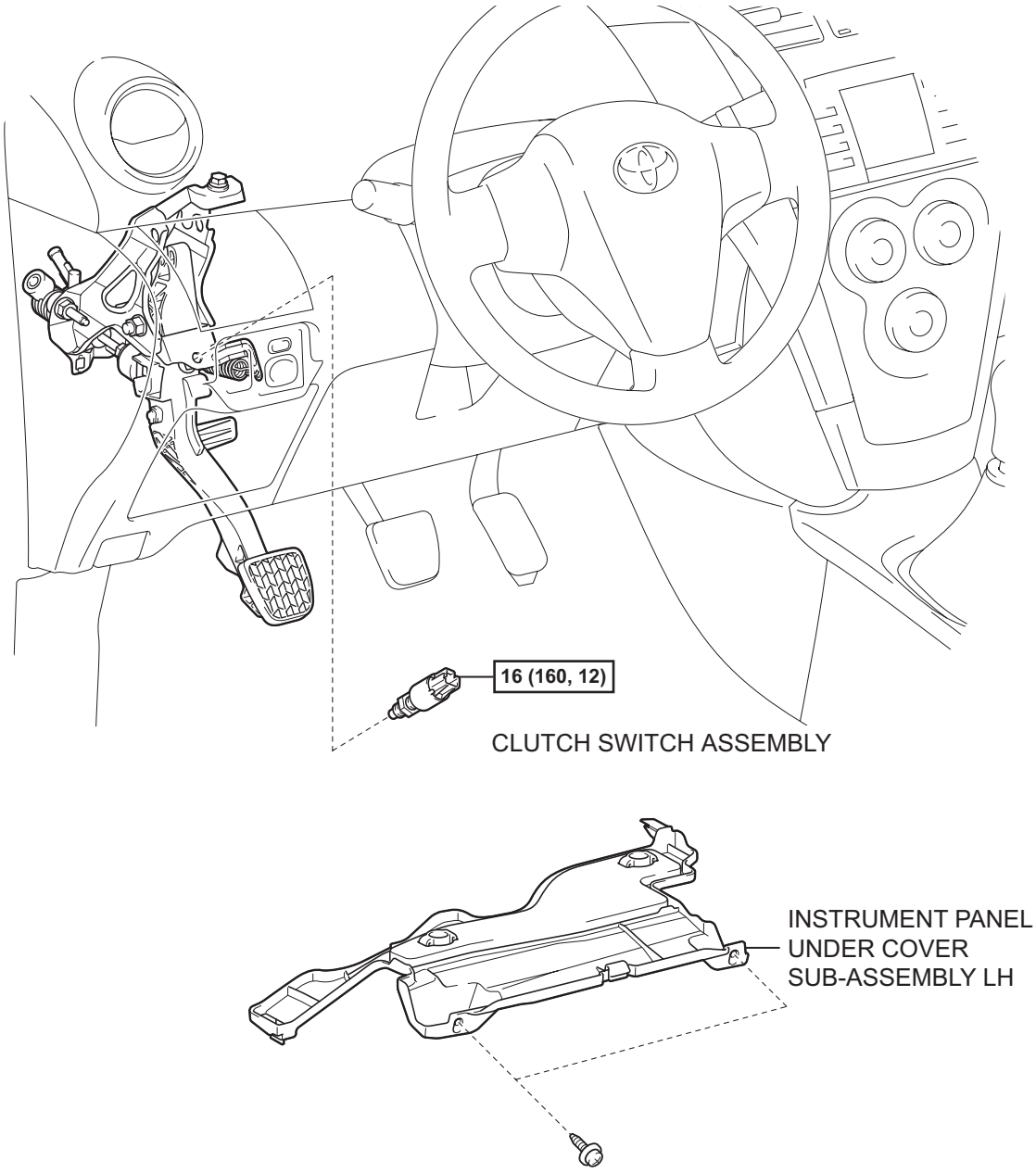

N*m (kgf*cm, ft*lbf) : Specified torque

P

E116827E01

REMOVAL

1. **DISCONNECT CABLE FROM NEGATIVE BATTERY TERMINAL**
2. **REMOVE INSTRUMENT PANEL UNDER COVER SUB-ASSEMBLY LH (See page IR-14)**
3. **REMOVE CLUTCH SWITCH ASSEMBLY**
   (a) Disconnect the connector.
   (b) Loosen the nut and remove the clutch switch assembly.

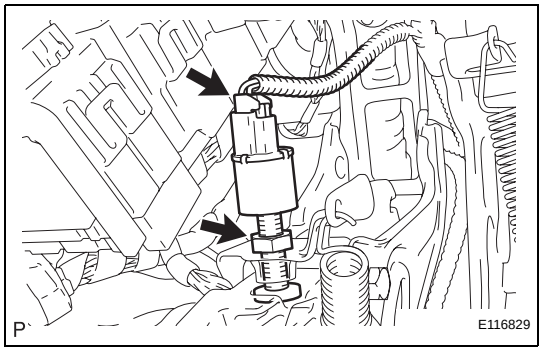

INSPECTION

1. **INSPECT CLUTCH SWITCH ASSEMBLY**
   (a) Remove the clutch switch.
   (b) Measure the resistance and check that the results in accordance with the value(s) in the table below.
   Standard resistance

Tester Connection	Condition	Specified Condition
1 - 2	Switch pin released (Clutch pedal depressed)	10 kΩ or higher
1 - 2	Switch pin pushed in (Clutch pedal released)	Below 1Ω

If the result is not as specified, replace the clutch switch.

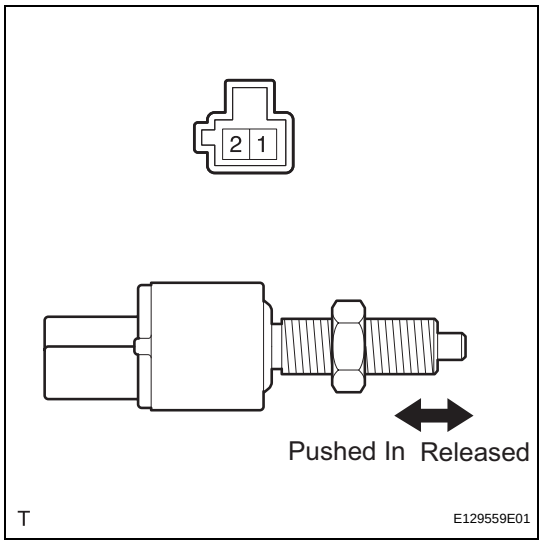

INSTALLATION
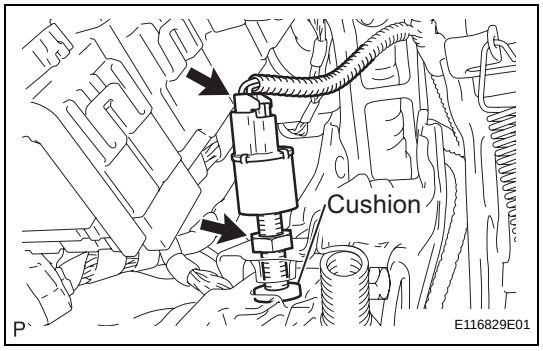
1. **INSTALL CLUTCH SWITCH ASSEMBLY**
   (a) Fully loosen the lock nut of the clutch switch assembly.
   (b) Adjust the clutch switch until the threaded portion comes into contact with the cushion. Tighten the lock nut and ensure that the threaded portion is in contact with the cushion.
   Torque: 16 N*m (160 kgf*cm, 12 ft.*lbf)
   (c) Connect the connector.
2. **INSTALL INSTRUMENT PANEL UNDER COVER SUB-ASSEMBLY LH (See page IR-35)**
3. **CONNECT CABLE TO NEGATIVE BATTERY TERMINAL**
   Torque: 5.4 N*m (55 kgf*cm, 48 in.*lbf)