SPECIFICATIONS 1-1

	Page
S SPECIFICATIONS	**2**
1. 4-door Sedan	2
2. 5-door	7

GETtheMANUALS.org

1. 4-door Sedan

1. DIMENSIONS

Model			1600		1800		2000
			FWD	AWD	FWD	AWD	
Overall length		mm (in)	4,350 (171.3), 4,375 (172.2)*1				4,340 (170.9)
Overall width		mm (in)	1,690 (66.5)				
Overall height (at CW)		mm (in)	1,400 (55.1)*2, 1,405 (55.3) 1,415 (55.7)*3	1,415 (55.7)	1,405 (55.3) 1,415 (55.7)*3	1,415 (55.7)	1,400 (55.1)
Compartment	Length	mm (in)	1,820 (71.7)				
	Width	mm (in)	1,385 (54.5)				
	Height	mm (in)	1,170 (46.1)				
Wheelbase		mm (in)	2,520 (99.2)				
Tread	Front	mm (in)	1,475 (58.1)*2 1,465 (57.7) 1,460 (57.5)*3	1,460 (57.5)	1,460 (57.5)	1,460 (57.5)	1,465 (57.7)
	Rear	mm (in)	1,465 (57.7)*2 1,455 (57.3) 1,450 (57.1)*3	1,455 (57.3)	1,455 (57.3) 1,450 (57.1)*3	1,455 (57.3)	1,455 (57.3)
Minimum road clearance		mm (in)	150 (5.9)	160 (6.3)	150 (5.9)	160 (6.3)	150 (5.9)

*1 : G.C.C. Countries
*2 : with 13 inch wheel
*3 : Australian model

2. ENGINE

Model		1600	1800	2000
Engine type		Horizontally opposed, liquid cooled, 4-cylinder, 4-stroke gasoline engine		
Valve arrangement		Overhead camshaft type		
Bore x Stroke	mm (in)	87.9 x 65.8 (3.461 x 2.591)	87.9 x 75 (3.461 x 2.95)	92 x 75 (3.62 x 2.95)
Displacement	cm^3 (cu in)	1,597 (97.45)	1,820 (111.06)	1,994 (121.67)
Compression ratio		9.4	9.5	8.0
Firing order		1 — 3 — 2 — 4		
Idle speed at Park/Neutral position	rpm	700		900
Maximum output	kW (PS)/rpm	66 (90)/5,600	76 (103)/5,600	155 (210)/6,000
Maximum torque	N.m (kg-m, ft-lb)/rpm	128 (13.0, 94)/4,000	147 (15.0, 108)/4,400	270 (27.6, 200)/4,800

3. ELECTRICAL

Model			1600	1800	2000
Ignition timing at idling speed		BTDC/rpm	15°/700		18°/900
Spark plug	Type and manufacturer		NGK: BKR6E (without catalyst) NGK: BKR6E-11 (with catalyst) CHAMPION: RC8YC4 (with catalyst)		NGK: PFR6G
Generator			12V — 75A		
Battery	Type and capacity (5HR)	For Europe	5MT: 12V — 48AH 4AT: 12V — 52AH		5MT: 12V — 48AH
		Others	5MT: 12V — 27AH 4AT: 12V — 36AH		5MT: 12V — 27AH or 12V — 48AH

GETtheMANUALS.org

4. TRANSMISSION

Model			1600		1800	
			FWD			
Transmission type			5MT*1	4AT*1	5MT*1	4AT*1
Clutch type			DSPD	TCC	DSPD	TCC
Gear ratio		1st	3.636	2.785	3.636	2.785
		2nd	2.105	1.545	2.105	1.545
		3rd	1.428	1.000	1.428	1.000
		4th	1.093	0.694	1.093	0.694
		5th	0.825	—	0.825	—
		Reverse	3.583	2.272	3.583	2.272
Auxiliary transmission gear ratio		High	—	—	—	—
		Low	—	—	—	—
Reduction gear (Front drive)	1st reduction	Type of gear	—	Helical	—	Helical
		Gear ratio	—	1.000	—	1.000
	Final reduction	Type of gear	Hypoid	Hypoid	Hypoid	Hypoid
		Gear ratio	3.900	4.444	3.900	4.111
Reduction gear (Rear drive)	Transfer reduction	Type of gear	—	—	—	—
		Gear ratio	—	—	—	—
	Final reduction	Type of gear	—	—	—	—
		Gear ratio	—	—	—	—

Model			1600	1800		2000
			AWD			
Transmission type			5MT*2	5MT*2	4AT*2	5MT*2
Clutch type			DSPD	DSPD	TCC	DSPD
Gear ratio		1st	3.545	3.545	2.785	3.454
		2nd	2.111	2.111	1.545	1.947
		3rd	1.448	1.448	1.000	1.366
		4th	1.088	1.088	0.694	0.972
		5th	0.825	0.825	—	0.738
		Reverse	3.416	3.416	2.272	3.416
Auxiliary transmission gear ratio		High	—	—	—	—
		Low	—	—	—	—
Reduction gear (Front drive)	1st reduction	Type of gear	—	—	Helical	—
		Gear ratio	—	—	1.000	—
	Final reduction	Type of gear	Hypoid	Hypoid	Hypoid	Hypoid
		Gear ratio	3.900	3.900	4.111	3.900
Reduction gear (Rear drive)	Transfer reduction	Type of gear	Helical	Helical	—	Helical
		Gear ratio	1.000	1.000	—	1.000
	Final reduction	Type of gear	Hypoid	Hypoid	Hypoid	Hypoid
		Gear ratio	3.900	3.900	4.111	3.545

5MT*1: 5-forward speeds with synchromesh and 1-reverse
4AT*1: Electronically controlled fully-automatic, 4-forward speeds and 1-reverse
5MT*2: 5-forward speeds with synchromesh and 1-reverse – with center differential and viscous coupling
4AT*2: Electronically controlled fully-automatic, 4-forward speeds and 1-reverse – with hydraulically controlled transfer clutch
DSPD: Dry Single Plate Diaphragm
TCC: Torque Converter Clutch

GETtheMANUALS.org

5. STEERING

Model	Non TURBO	TURBO	
		RHD	LHD
Type	Rack and Pinion		
Turns, lock to lock	3.2	2.8	3.0
Minimum turning circle m (ft)	Curb to curb: 10.2 (33.5)	Curb to curb: 10.4 (34.1)	Curb to curb: 10.8 (35.4)

6. SUSPENSION

Front	Macpherson strut type, Independent, Coil spring
Rear	Dual link strut type, Independent, Coil spring

7. BRAKE

Model	without ABS	with ABS	TURBO
Service brake system	Dual circuit hydraulic with vacuum suspended power unit		
Front	Ventilated disc brake		
Rear	Drum brake	Disc brake	
Parking brake	Mechanical on rear brakes		

8. TIRE

Model	Non TURBO		TURBO
Rim size	13 x 5.00B	14 x 5-1/2JJ	15 x 6JJ
Tire size	165R13	175/70R14	205/55R15
Type	Steel belted radial, Tubeless		

9. CAPACITY

Model			Non TURBO				TURBO
			FWD		AWD		
			5MT	4AT	5MT	4AT	5MT
Fuel tank		ℓ (US gal, Imp gal)	50 (13.2, 11.0)				60 (15.9, 13.2)
Engine oil	Upper level	ℓ (US qt, Imp qt)	4.0 (4.2, 3.5)				4.5 (4.8, 4.0)
	Lower level	ℓ (US qt, Imp qt)	3.0 (3.2, 2.6)				3.5 (3.7, 3.1)
Transmission gear oil		ℓ (US qt, Imp qt)	2.6 (2.7, 2.3)	—	4.0 (4.2, 3.5)	—	4.0 (4.2, 3.5)
Automatic transmission fluid		ℓ (US qt, Imp qt)	—	7.9 (8.4, 7.0)	—	7.9 (8.4, 7.0)	—
AT differential gear oil		ℓ (US qt, Imp qt)	—	1.2 (1.3, 1.1)	—	1.2 (1.3, 1.1)	—
AWD rear differential gear oil		ℓ (US qt, Imp qt)	—		0.8 (0.8, 0.6)		
Power steering fluid		ℓ (US qt, Imp qt)	0.7 (0.7, 0.6)				
Engine coolant		ℓ (US qt, Imp qt)	1600: 6.4 (6.8, 5.6), 1800: 6.2 (6.6, 5.5)				2000: 7.2 (7.6, 6.3)

GETtheMANUALS.org

10. WEIGHT

Model — Europe, General —			1600					
			FWD					
			DL		LX		GL	
			5MT	4AT	5MT	4AT	5MT	4AT
Curb weight (C.W.)	Front	kg (lb)	605 (1,335)	650 (1,435)	615 (1,355)	660 (1,455)	625 (1,380)	670 (1,475)
	Rear	kg (lb)	400 (880)	410 (905)	410 (905)	415 (915)	425 (935)	430 (950)
	Total	kg (lb)	1,005 (2,215)	1,060 (2,335)	1,025 (2,260)	1,075 (2,370)	1,050 (2,315)	1,100 (2,425)
Maximum permissible axle weight (M.P.A.W.)	Front	kg (lb)	790 (1,750)	830 (1,830)	790 (1,750)	830 (1,830)	810 (1,785)	850 (1,875)
	Rear	kg (lb)	760 (1,675)	790 (1,740)	760 (1,675)	790 (1,740)	770 (1,700)	800 (1,765)
Maximum permissible weight (M.P.W.)	Total	kg (lb)	1,520 (3,350)	1,590 (3,505)	1,520 (3,350)	1,590 (3,505)	1,580 (3,485)	1,640 (3,615)

Model — Europe, General —			1600		1800				2000
			AWD		FWD		AWD		
			LX	GL	GL		GL		TURBO
			5MT	5MT	5MT	4AT	5MT	4AT	5MT
Curb weight (C.W.)	Front	kg (lb)	645 (1,420)	650 (1,435)	630 (1,390)	675 (1,490)	655 (1,445)	685 (1,510)	725 (1,600)
	Rear	kg (lb)	470 (1,035)	475 (1,045)	425 (935)	430 (950)	475 (1,045)	480 (1,060)	510 (1,125)
	Total	kg (lb)	1,115 (2,460)	1,125 (2,480)	1,055 (2,325)	1,105 (2,435)	1,130 (2,490)	1,165 (2,570)	1,235 (2,725)
Maximum permissible axle weight (M.P.A.W.)	Front	kg (lb)	810 (1,785)	830 (1,830)	810 (1,785)	850 (1,875)	840 (1,850)	860 (1,895)	900 (1,985)
	Rear	kg (lb)	830 (1,830)	840 (1,850)	770 (1,700)	800 (1,760)	840 (1,850)	840 (1,850)	850 (1,875)
Maximum permissible weight (M.P.W.)	Total	kg (lb)	1,620 (3,570)	1,640 (3,615)	1,580 (3,485)	1,640 (1,615)	1,680 (3,705)	1,680 (3,705)	1,750 (3,860)

Model — G.C.C. Countries —			1600		
			FWD		
			LX	GL	
			5MT	5MT	4AT
Curb weight (C.W.)	Front	kg (lb)	645 (1,420)	650 (1,435)	695 (1,530)
	Rear	kg (lb)	410 (905)	425 (935)	435 (960)
	Total	kg (lb)	1,055 (2,325)	1,075 (2,370)	1,130 (2,490)
Gross vehicle weight (G.V.M.)	Front	kg (lb)	810 (1,785)	810 (1,785)	840 (1,850)
	Rear	kg (lb)	770 (1,700)	770 (1,700)	800 (1,765)
	Total	kg (lb)	1,580 (3,485)	1,580 (3,485)	1,640 (3,615)

GETtheMANUALS.org

SPECIFICATIONS

Model — Australia —			1600		1800				2000
			FWD		FWD		AWD		
			LX		GX		GX		WRX
			5MT	4AT	5MT	4AT	5MT	4AT	5MT
Unladen mass (U.M.)	Front	kg (lb)	610 (1,345)	650 (1,435)	620 (1,365).	660 (1,455)	635 (1,400)	665 (1,465)	730 (1,610)
	Rear	kg (lb)	420 (925)	425 (935)	435 (960)	440 (970)	485 (1,070)	490 (1,080)	515 (1,135)
	Total	kg (lb)	1,030 (2,270)	1,075 (2,370)	1,055 (2,325)	1,100 (2,425)	1,120 (2,470)	1,155 (2,545)	1,245 (2,745)
Gross vehicle mass (G.V.M.)	Front	kg (lb)	830 (1,830)		830 (1,830)		830 (1,830)		900 (1,985)
	Rear	kg (lb)	750 (1,655)		780 (1,720)		830 (1,830)		850 (1,875)
	Total	kg (lb)	1,580 (3,485)		1,610 (3,550)		1,660 (3,660)		1,750 (3,860)

NOTE:
When any of the following optional parts are installed, add the weight to the curb weight or unladen mass.
If power steering is not equipped, subtract the weight from the curb weight.

Weight of optional parts	Power window	Power door lock	A.B.S.	Air conditioning	Sun roof	Power steering	SRS Airbag (Driver)	SRS Air bag (Driver & Passenger)
Front kg (lb)	1 (2)	0 (0)	11 (24) [18 (40)]	19 (42)	5 (11)	8 (18)	5 (11)	8 (18)
Rear kg (lb)	2 (4)	1 (2)	8 (18) [13 (29)]	–2 (–4)	8 (18)	–1 (–2)	1 (2)	0 (0)
Total kg (lb)	3 (7)	1 (2)	19 (42) [31 (68)]	17 (37)	13 (29)	7 (15)	6 (12)	8 (18)

[ ] : In case that the ABS is installed on 13 in.-wheel equipped vehicles, the wheels must be exchanged for 14 in. ones. To obtain the curb weight of the vehicle, therefore, the values shown in [ ] must be added.

GETtheMANUALS.org

2. 5-door

1. DIMENSIONS

Model			1600		1800		2000
			FWD	AWD	FWD	AWD	
Overall length		mm (in)	4,350 (171.3), 4,375 (172.2)*1				4,340 (170.9)
Overall width		mm (in)	1,690 (66.5)				
Overall height (at CW)		mm (in)	1,405 (55.3)*2, 1,410 (55.5)	1,420 (55.9)	1,410 (55.5) 1,415 (55.8)*3	1,420 (55.9)	1,400 (55.1) 1,435 (56.5)*4
Compartment	Length	mm (in)	1,790 (70.5)				
	Width	mm (in)	1,385 (54.5)				
	Height	mm (in)	1,170 (46.1)				
Wheelbase		mm (in)	2,520 (99.2)				
Tread	Front	mm (in)	1,475 (58.1)*2 1,465 (57.7)	1,460 (57.5)	1,465 (57.7) 1,460 (57.5)*3	1,460 (57.5)	1,465 (57.7)
	Rear	mm (in)	1,460 (57.5)*2 1,450 (57.1)	1,450 (57.1)	1,450 (57.1)	1,450 (57.1)	1,450 (57.1)
Minimum road clearance		mm (in)	150 (5.9)	160 (6.3)	150 (5.9)	160 (6.3)	150 (5.9)

*1 : G.C.C. Countries
*2 : with 13 inch wheel
*3 : Australian model
*4 : with roof rail

2. ENGINE

Model		1600	1800	2000
Engine type		Horizontally opposed, liquid cooled, 4-cylinder, 4-stroke gasoline engine		
Valve arrangement		Overhead camshaft type		
Bore x Stroke	mm (in)	87.9 x 65.8 (3.461 x 2.591)	87.9 x 75 (3.461 x 2.95)	92 x 75 (3.62 x 2.95)
Displacement	cm^3 (cu in)	1,597 (97.45)	1,820 (111.06)	1,994 (121.67)
Compression ratio		9.4	9.5	8.0
Firing order		1 — 3 — 2 — 4		
Idling speed at Park/Neutral position	rpm	700		900
Maximum output	kW (PS)/rpm	66 (90)/5,600	76 (103)/5,600	155 (210)/6,000
Maximum torque	N.m (kg-m, ft-lb)/rpm	128 (13.0, 94)/4,000	147 (15.0, 108)/4,400	270 (27.6, 200)/4,800

3. ELECTRICAL

Model			1600	1800	2000
Ignition timing at idling speed		BTDC/rpm	15°/700		18°/900
Spark plug	Type and manufacturer		NGK: BKR6E (without catalyst), NGK: BKR6E-11 (with catalyst) CHAMPION: RC8YC4 (with catalyst)		NGK: PFR6G
Generator			12V — 75A		
Battery	Type and capacity (5HR)	For Europe	5MT: 12V — 48AH 4AT: 12V — 52AH		5MT: 12V — 48AH
		Others	5MT: 12V — 27AH 4AT: 12V — 36AH		5MT: 12V — 27AH or 12V — 48AH

GETtheMANUALS.org

4. TRANSMISSION

Model			1600		1800	
			FWD			
Transmission type			5MT*1	4AT*1	5MT*1	4AT*1
Clutch type			DSPD	TCC	DSPD	TCC
Gear ratio		1st	3.636	2.785	3.636	2.785
		2nd	2.105	1.545	2.105	1.545
		3rd	1.428	1.000	1.428	1.000
		4th	1.093	0.694	1.093	0.694
		5th	0.825	—	0.825	—
		Reverse	3.583	2.272	3.583	2.272
Auxiliary transmission gear ratio		High	—	—	—	—
		Low	—	—	—	—
Reduction gear (Front drive)	1st reduction	Type of gear	—	Helical	—	Helical
		Gear ratio	—	1.000	—	1.000
	Final reduction	Type of gear	Hypoid	Hypoid	Hypoid	Hypoid
		Gear ratio	3.900	4.444	3.900	4.111
Reduction gear (Rear drive)	Transfer reduction	Type of gear	—	—	—	—
		Gear ratio	—	—	—	—
	Final reduction	Type of gear	—	—	—	—
		Gear ratio	—	—	—	—

Model			1600	1800			2000
			AWD				
Transmission type			5MT*3	5MT*3	4AT*2	5MT*2	5MT*2
Clutch type			DSPD	DSPD	TCC	DSPD	DSPD
Gear ratio		1st	3.545	3.545	2.785	3.545	3.545
		2nd	2.111	2.111	1.545	2.111	1.947
		3rd	1.448	1.448	1.000	1.448	1.366
		4th	1.088	1.088	0.694	1.088	0.972
		5th	0.825	0.825	—	0.825	0.738
		Reverse	3.416	3.416	2.272	3.416	3.416
Auxiliary transmission gear ratio		High	1.000	1.000	—	—	—
		Low	1.592	1.592	—	—	—
Reduction gear (Front drive)	1st reduction	Type of gear	—	—	Helical	—	—
		Gear ratio	—	—	1.000	—	—
	Final reduction	Type of gear	Hypoid	Hypoid	Hypoid	Hypoid	Hypoid
		Gear ratio	3.900	3.900	4.111	3.900	3.900
Reduction gear (Rear drive)	Transfer reduction	Type of gear	Helical	Helical	—	Helical	Helical
		Gear ratio	1.000	1.000	—	1.000	1.100
	Final reduction	Type of gear	Hypoid	Hypoid	Hypoid	Hypoid	Hypoid
		Gear ratio	3.900	3.900	4.111	3.900	3.545

5MT*1: 5-forward speeds with synchromesh and 1-reverse
4AT*1: Electronically controlled fully-automatic, 4-forward speeds and 1-reverse
5MT*2: 5-forward speeds with synchromesh and 1-reverse — with center differential and viscous coupling
4AT*2: Electronically controlled fully-automatic, 4-forward speeds and 1-reverse — with hydraulically controlled transfer clutch
5MT*3: 5 × 2 forward speeds with synchromesh and 1-reverse — with center differential and viscous coupling
DSPD: Dry Single Plate Diaphragm
TCC: Torque Converter Clutch

GETtheMANUALS.org

5. STEERING

Model	Non TURBO	TURBO	
		RHD	LHD
Type	Rack and Pinion		
Turns, lock to lock	3.2	2.8	3.0
Minimum turning circle m (ft)	Curb to curb: 10.2 (33.5)	Curb to curb: 10.4 (34.1)	Curb to curb: 10.8 (35.4)

6. SUSPENSION

Front	Macpherson strut type, Independent, Coil spring
Rear	Dual link strut type, Independent, Coil spring

7. BRAKE

Model	without ABS	with ABS	TURBO
Service brake system	Dual circuit hydraulic with vacuum suspended power unit		
Front	Ventilated disc brake		
Rear	Drum brake	Disc brake	
Parking brake	Mechanical on rear brakes		

8. TIRE

Model	Non TURBO		TURBO
Rim size	13 x 5.00B	14 x 5-1/2JJ	15 x 6JJ
Tire size	165R13	175/70R14	205/55R15
Type	Steel belted radial, Tubeless		

9. CAPACITY

Model			Non TURBO				TURBO
			FWD		AWD		
			5MT	4AT	5MT	4AT	5MT
Fuel tank		ℓ (US gal, Imp gal)	50 (13.2, 11.0)				60 (15.9, 13.2)
Engine oil	Upper level	ℓ (US qt, Imp qt)	4.0 (4.2, 3.5)				4.5 (4.8, 4.0)
	Lower level	ℓ (US qt, Imp qt)	3.0 (3.2, 2.6)				3.5 (3.7, 3.1)
Transmission gear oil		ℓ (US qt, Imp qt)	2.6 (2.7, 2.3)	—	4.0 (4.2, 3.5)	—	4.0 (4.2, 3.5)
Automatic transmission fluid		ℓ (US qt, Imp qt)	—	7.9 (8.4, 7.0)	—	7.9 (8.4, 7.0)	—
AT differential gear oil		ℓ (US qt, Imp qt)	—	1.2 (1.3, 1.1)	—	1.2 (1.3, 1.1)	—
AWD rear differential gear oil		ℓ (US qt, Imp qt)	—		0.8 (0.8, 0.6)		
Power steering fluid		ℓ (US qt, Imp qt)	0.7 (0.7, 0.6)				
Engine coolant		ℓ (US qt, Imp qt)	1600: 6.4 (6.8, 5.6), 1800: 6.2 (6.6, 5.5)				2000: 7.2 (7.6, 6.3)

GETtheMANUALS.org

10. WEIGHT

Model — Europe, General —			1600					
			FWD				AWD	
			LX		GL		LX	GL
			5MT	4AT	5MT	4AT	5MT	5MT
Curb weight (C.W.)	Front	kg (lb)	610 (1,345)	655 (1,445)	620 (1,365)	665 (1,465)	645 (1,420)	650 (1,435)
	Rear	kg (lb)	450 (990)	460 (1,015)	460 (1,015)	465 (1,025)	510 (1,125)	510 (1,125)
	Total	kg (lb)	1,060 (2,335)	1,115 (2,460)	1,080 (2,380)	1,130 (2,490)	1,155 (2,545)	1,160 (2,560)
Maximum permissible axle weight (M.P.A.W.)	Front	kg (lb)	810 (1,785)	830 (1,830)	800 (1,765)	840 (1,850)	810 (1,785)	820 (1,810)
	Rear	kg (lb)	800 (1,765)	810 (1,785)	830 (1,830)	840 (1,850)	870 (1,920)	870 (1,920)
Maximum permissible weight (M.P.W.)	Total	kg (lb)	1,590 (3,505)	1,640 (3,615)	1,630 (3,595)	1,680 (3,705)	1,670 (3,680)	1,690 (3,725)

Model — Europe, General —			1800				2000
			FWD		AWD		
			GL		GL		TURBO
			5MT	4AT	5MT	4AT	5MT
Curb weight (C.W.)	Front	kg (lb)	625 (1,880)	670 (1,475)	655 (1,445)	680 (1,500)	725 (1,600)
	Rear	kg (lb)	455 (1,005)	465 (1,025)	510 (1,125)	515 (1,135)	545 (1,200)
	Total	kg (lb)	1,080 (2,380)	1,135 (2,500)	1,165 (2,570)	1,195 (2,635)	1,270 (2,800)
Maximum permissible axle weight (M.P.A.W.)	Front	kg (lb)	800 (1,765)	840 (1,850)	850 (1,875)	850 (1,875)	900 (1,985)
	Rear	kg (lb)	830 (1,830)	840 (1,850)	870 (1,920)	870 (1,920)	900 (1,985)
Maximum permissible weight (M.P.W.)	Total	kg (lb)	1,630 (3,595)	1,680 (3,705)	1,720 (3,795)	1,720 (3,795)	1,800 (3,970)

Model — G.C.C. Countries —			1600		1800
			FWD		AWD
			GL		GL
			5MT	4AT	5MT
Curb weight (C.W.)	Front	kg (lb)	640 (1,410)	690 (1,520)	665 (1,465)
	Rear	kg (lb)	465 (1,025)	470 (1,035)	515 (1,135)
	Total	kg (lb)	1,105 (2,435)	1,160 (2,560)	1,180 (2,600)
Gross vehicle weight (G.V.M.)	Front	kg (lb)	800 (1,765)	830 (1,830)	850 (1,875)
	Rear	kg (lb)	830 (1,830)	860 (1,895)	870 (1,920)
	Total	kg (lb)	1,630 (3,595)	1,690 (3,725)	1,720 (3,795)

GETtheMANUALS.org

Model — Australia —			1800				2000
			FWD		AWD		
			GX		GX		WRX
			5MT	4AT	5MT	4AT	5MT
Unladen mass (U.M.)	Front	kg (lb)	610 (1,345)	650 (1,435)	635 (1,400)	670 (1,475)	725 (1,600)
	Rear	kg (lb)	470 (1,035)	475 (1,045)	520 (1,145)	525 (1,160)	555 (1,225)
	Total	kg (lb)	1,080 (2,380)	1,125 (2,480)	1,155 (2,545)	1,195 (2,635)	1,280 (2,820)
Gross vehicle mass (G.V.M.)	Front	kg (lb)	870 (1,920)		870 (1,920)		900 (1,985)
	Rear	kg (lb)	820 (1,810)		870 (1,920)		900 (1,985)
	Total	kg (lb)	1,690 (3,725)		1,740 (3,835)		1,800 (3,970)

NOTE:
When any of the following optional parts are installed, add the weight to the curb weight or unladen mass.
If power steering is not equipped, subtract the weight from the curb weight.

Weight of optional parts	Power window	Power door lock	A.B.S.	Air conditioning	Sun roof	Power steering	SRS Airbag (Driver)	SRS Air bag (Driver & Passenger)
Front kg (lb)	1 (2)	0 (0)	11 (24) [18 (40)]	19 (42)	5 (11)	8 (18)	5 (11)	8 (18)
Rear kg (lb)	2 (4)	1 (2)	8 (18) [13 (29)]	–2 (–4)	8 (18)	–1 (–2)	1 (2)	0 (0)
Total kg (lb)	3 (7)	1 (2)	19 (42) [31 (68)]	17 (37)	13 (29)	7 (15)	6 (12)	8 (18)

[ ] : In case that the ABS is installed on 13 in.-wheel equipped vehicles, the wheels must be exchanged for 14 in. ones. To obtain the curb weight of the vehicle, therefore, the values shown in [ ] must be added.

GETtheMANUALS.org

GENERAL INFORMATION 1-3

	Page
1. General Precautions	
2. Precaution for Supplemental Restraint System (Airbag)	
3. Vehicle Identification Numbers (V.I.N.)	2
4. Identification Number and Label Locations	6
5. Recommended Fuel, Lubricants, Sealants and Adhesives	8
6. Tightening Torque of Standard Bolts and Nuts	
7. Lifting, Towing and Tie-down Points	11

GETtheMANUALS.org

3. Vehicle Identification Numbers (V.I.N)

A. APPLICABLE V.I.N. IN THIS MANUAL

1. LEFT-HAND DRIVE VEHICLE

4-Door Sedan	1600 cc engine	DL	5MT	J	F	1	G	C	3	B	L	0	E	B	0	0	2	0	0	1	and after
			4AT	J	F	1	G	C	3	B	L	0	E	K	0	0	2	0	0	1	and after
		LX	5MT	J	F	1	G	C	3	B	L	0	E	B	0	0	2	0	0	1	and after
			4AT	J	F	1	G	C	3	B	L	0	E	K	0	0	2	0	0	1	and after
		GL	5MT	J	F	1	G	C	3	B	L	0	E	B	0	0	2	0	0	1	and after
			4AT	J	F	1	G	C	3	B	L	0	E	K	0	0	2	0	0	1	and after
		AWD LX	5MT	J	F	1	G	C	4	B	L	0	E	G	0	0	2	0	0	1	and after
		AWD GL	5MT	J	F	1	G	C	4	B	L	0	E	G	0	0	2	0	0	1	and after
	1800 cc engine	GL	5MT	J	F	1	G	C	5	B	L	0	E	B	0	0	2	0	0	1	and after
			4AT	J	F	1	G	C	5	B	L	0	E	K	0	0	2	0	0	1	and after
		AWD GL	5MT	J	F	1	G	C	6	B	L	0	E	G	0	0	2	0	0	1	and after
			4AT	J	F	1	G	C	6	B	L	0	E	H	0	0	2	0	0	1	and after
	2000 cc DOHC engine	AWD TURBO	5MT	J	F	1	G	C	8	B	L	0	B	G	0	0	2	0	0	1	and after
5-Door	1600 cc engine	LX	5MT	J	F	1	G	F	3	B	L	0	E	B	0	0	2	0	0	1	and after
			4AT	J	F	1	G	F	3	B	L	0	E	K	0	0	2	0	0	1	and after
		GL	5MT	J	F	1	G	F	3	B	L	0	E	B	0	0	2	0	0	1	and after
			4AT	J	F	1	G	F	3	B	L	0	E	K	0	0	2	0	0	1	and after
		AWD LX	5MT DR	J	F	1	G	F	4	B	L	0	E	J	0	0	2	0	0	1	and after
		AWD GL	5MT DR	J	F	1	G	F	4	B	L	0	E	J	0	0	2	0	0	1	and after
	1800 cc engine	GL	5MT	J	F	1	G	F	5	B	L	0	E	B	0	0	2	0	0	1	and after
			4AT	J	F	1	G	F	5	B	L	0	E	K	0	0	2	0	0	1	and after
		AWD GL	5MT DR	J	F	1	G	F	6	B	L	0	E	J	0	0	2	0	0	1	and after
			4AT	J	F	1	G	F	6	B	L	0	E	H	0	0	2	0	0	1	and after
	2000 cc DOHC engine	AWD TURBO	5MT	J	F	1	G	F	8	B	L	0	B	G	0	0	2	0	0	1	and after

DR: Dual-range

2. RIGHT-HAND DRIVE VEHICLE

4-Door Sedan	1600 cc engine	LX	5MT	J	F	1	G	C	3	B	R	0	E	B	0	0	2	0	0	1	and after
			4AT	J	F	1	G	C	3	B	R	0	E	K	0	0	2	0	0	1	and after
		GL	5MT	J	F	1	G	C	3	B	R	0	E	B	0	0	2	0	0	1	and after
			4AT	J	F	1	G	C	3	B	R	0	E	K	0	0	2	0	0	1	and after
		AWD LX	5MT	J	F	1	G	C	4	B	R	0	E	G	0	0	2	0	0	1	and after
		AWD GL	5MT	J	F	1	G	C	4	B	R	0	E	G	0	0	2	0	0	1	and after
	1800 cc engine	AWD GL	5MT	J	F	1	G	C	6	B	R	0	E	G	0	0	2	0	0	1	and after
			4AT	J	F	1	G	C	6	B	R	0	E	H	0	0	2	0	0	1	and after
	2000 cc DOHC engine	AWD TURBO	5MT	J	F	1	G	C	8	B	R	0	B	G	0	0	2	0	0	1	and after

GETtheMANUALS.org

5-Door	1600 cc engine	LX	5MT	J	F	1	G	F	3	B	R	0	E	B	0	0	2	0	0	1	and after
		GL	5MT	J	F	1	G	F	3	B	R	0	E	B	0	0	2	0	0	1	and after
			4AT	J	F	1	G	F	3	B	R	0	E	K	0	0	2	0	0	1	and after
		AWD LX	5MT DR	J	F	1	G	F	4	B	R	0	E	J	0	0	2	0	0	1	and after
		AWD GL	5MT DR	J	F	1	G	F	4	B	R	0	E	J	0	0	2	0	0	1	and after
	1800 cc engine	AWD GL	5MT DR	J	F	1	G	F	6	B	R	0	E	J	0	0	2	0	0	1	and after
			4AT	J	F	1	G	F	6	B	R	0	E	H	0	0	2	0	0	1	and after
	2000 cc DOHC engine	AWD TURBO	5MT	J	F	1	G	F	8	B	R	0	B	G	0	0	2	0	0	1	and after

DR: Dual-range

3. AUSTRALIA

4-Door Sedan	1600 cc engine	LX	5MT	J	F	1	G	C	3	B	R	0	E	B	0	0	2	0	0	1	and after
			4AT	J	F	1	G	C	3	B	R	0	E	K	0	0	2	0	0	1	and after
	1800 cc engine	GX	5MT	J	F	1	G	C	5	B	R	0	E	B	0	0	2	0	0	1	and after
			4AT	J	F	1	G	C	5	B	R	0	E	K	0	0	2	0	0	1	and after
		AWD GX	5MT	J	F	2	G	C	6	B	R	0	E	G	0	0	2	0	0	1	and after
			4AT	J	F	2	G	C	6	B	R	0	E	H	0	0	2	0	0	1	and after
	2000 cc DOHC engine	AWD WRX	5MT	J	F	2	G	C	8	B	R	0	B	G	0	0	2	0	0	1	and after
5-Door	1800 cc engine	GX	5MT	J	F	1	G	F	5	B	R	0	E	B	0	0	2	0	0	1	and after
			4AT	J	F	1	G	F	5	B	R	0	E	K	0	0	2	0	0	1	and after
		AWD GX	5MT	J	F	2	G	F	6	B	R	0	E	G	0	0	2	0	0	1	and after
			4AT	J	F	2	G	F	6	B	R	0	E	H	0	0	2	0	0	1	and after
	2000 cc DOHC engine	AWD WRX	5MT	J	F	2	G	F	8	B	R	0	B	G	0	0	2	0	0	1	and after

4. G.C.C. COUNTRIES

4-Door Sedan	1600 cc engine	LX	5MT	J	F	1	G	C	3	B	L	0	E	B	0	0	2	0	0	1	and after
		GL	5MT	J	F	1	G	C	3	B	L	0	E	B	0	0	2	0	0	1	and after
			4AT	J	F	1	G	C	3	B	L	0	E	K	0	0	2	0	0	1	and after
5-Door	1600 cc engine	GL	5MT	J	F	1	G	F	3	B	L	0	E	B	0	0	2	0	0	1	and after
			4AT	J	F	1	G	F	3	B	L	0	E	K	0	0	2	0	0	1	and after
	1800 cc engine	AWD GL	5MT	J	F	1	G	F	6	B	L	0	E	G	0	0	2	0	0	1	and after

GETtheMANUALS.org

B. THE MEANING OF V.I.N.

1. LEFT-HAND DRIVE VEHICLE

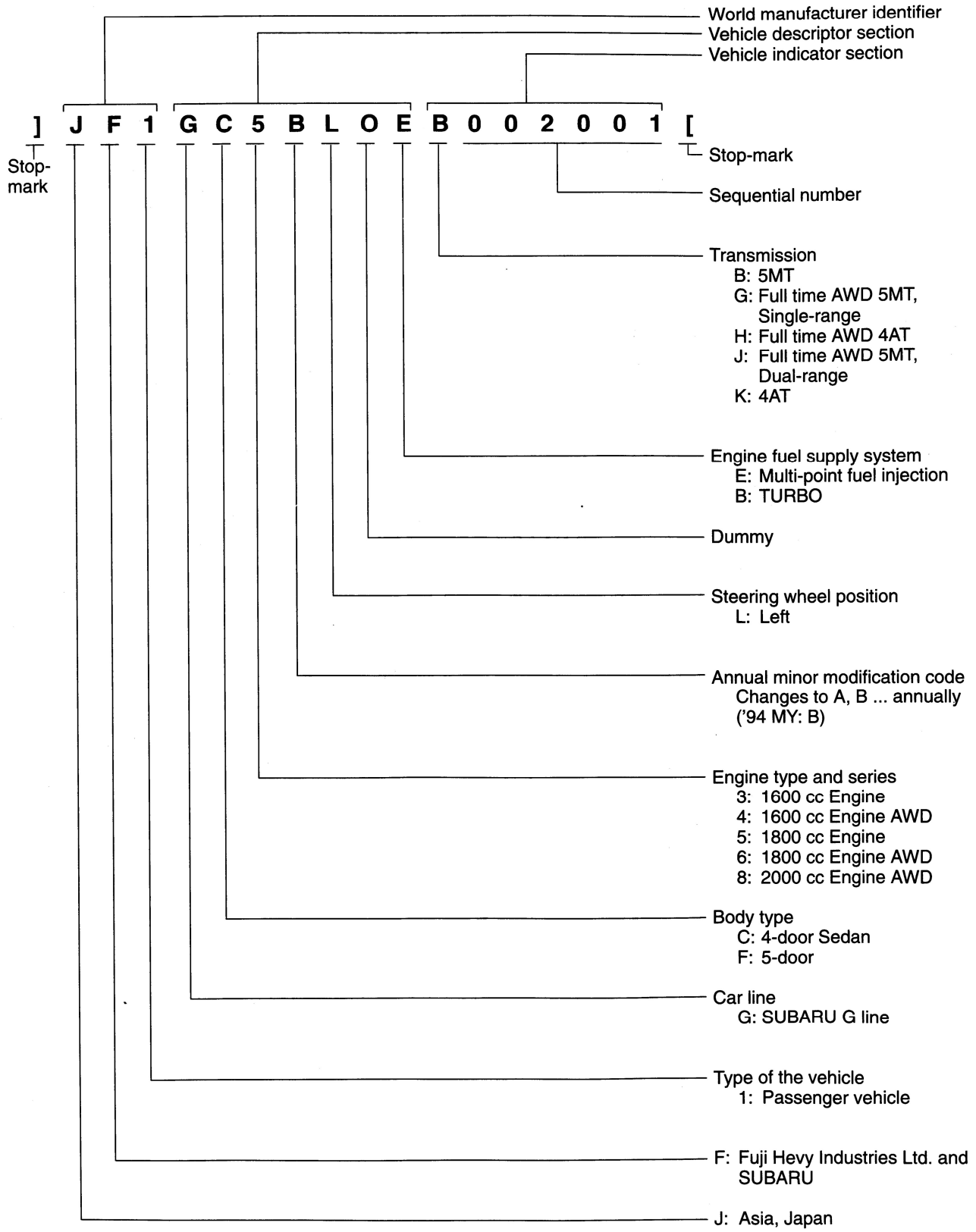

GETtheMANUALS.org

2. RIGHT-HAND DRIVE VEHICLE

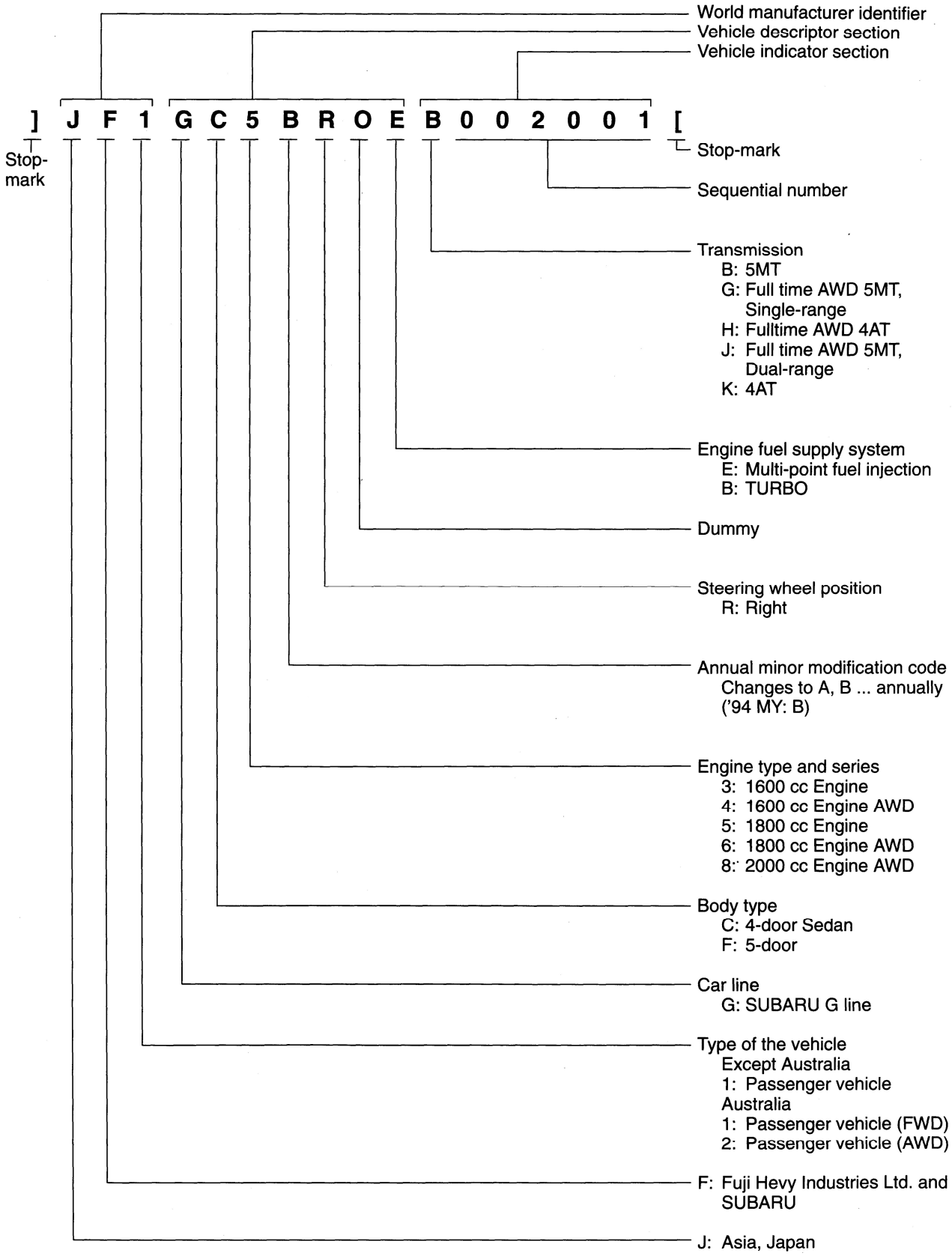

GETtheMANUALS.org

4.Identification Number and Label Locations

Engine, transmission and vehicle identification numbers are used for factory communications such as Technical Information, Service Bulletins and other information.

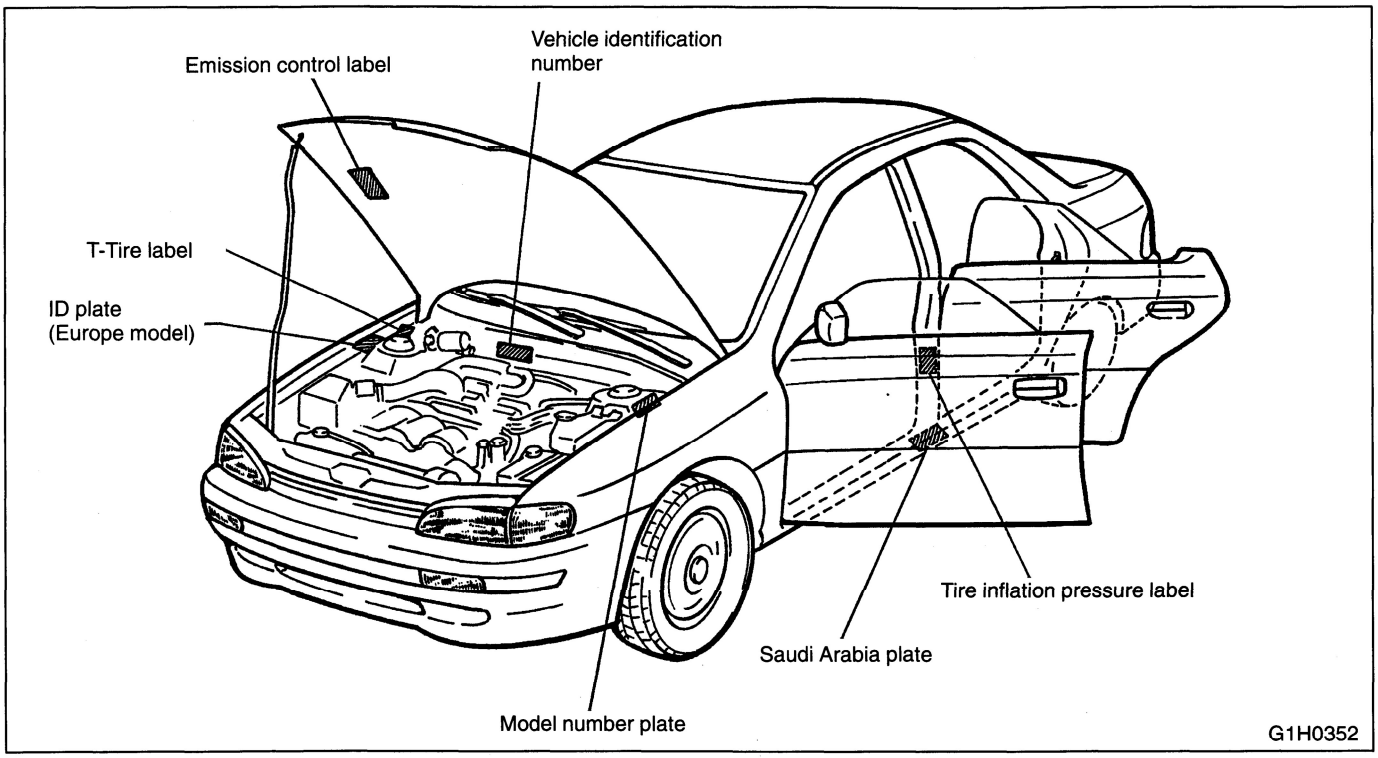

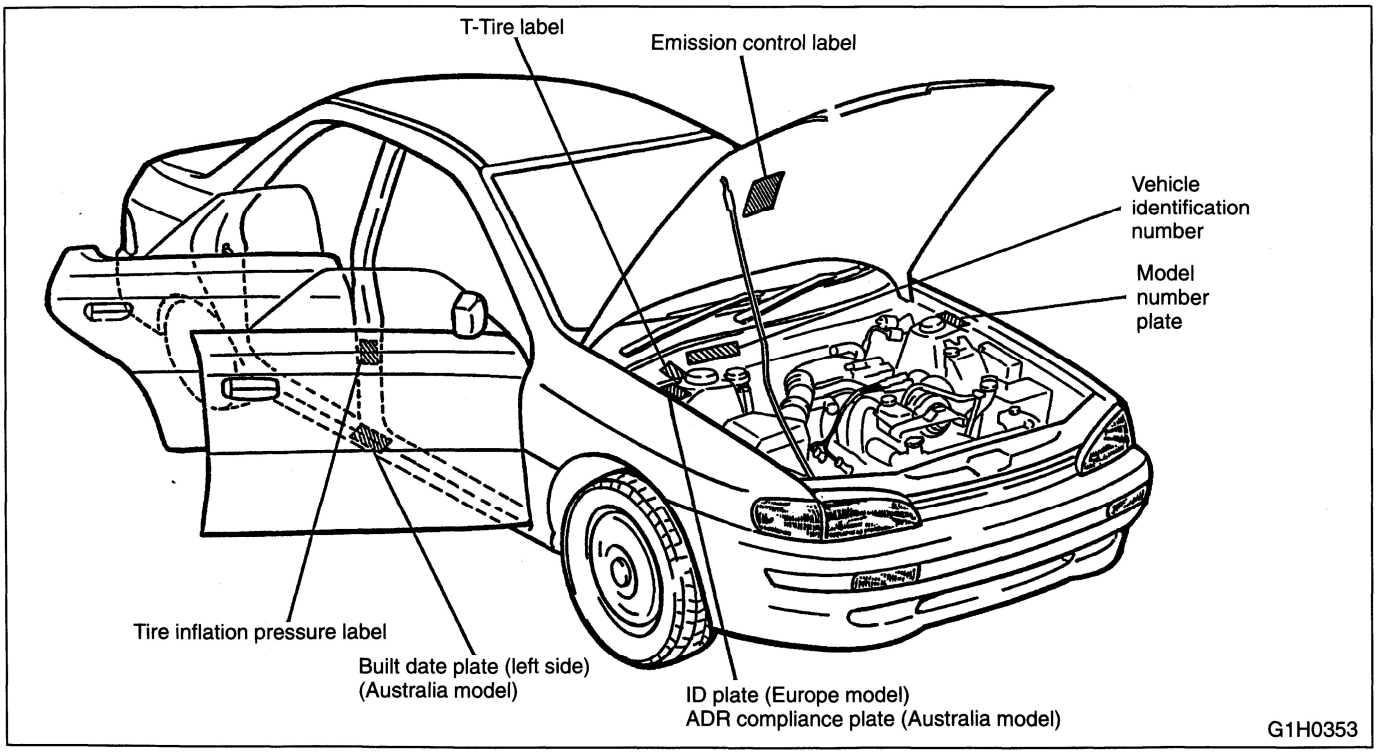

GETtheMANUALS.org

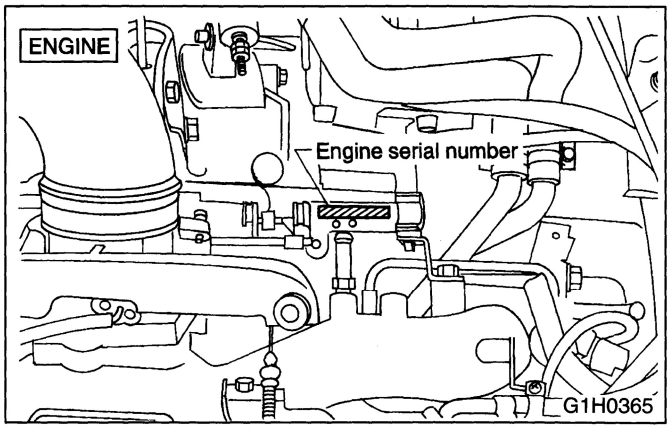

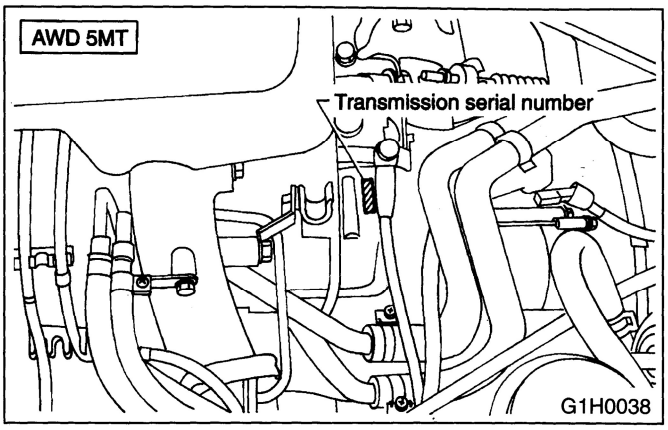

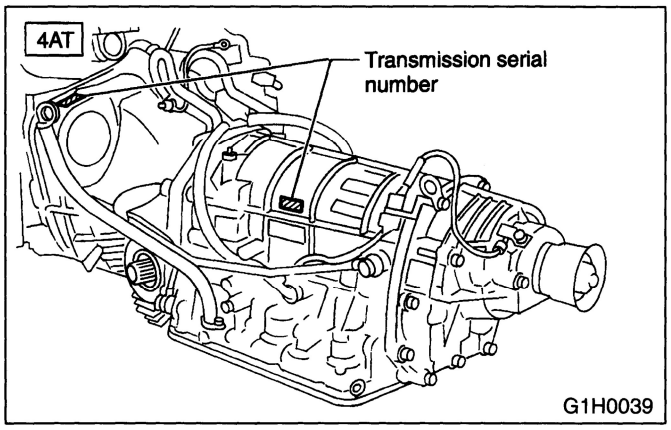

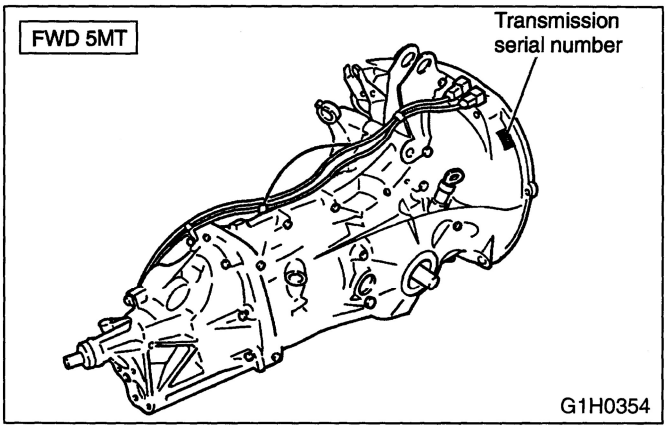

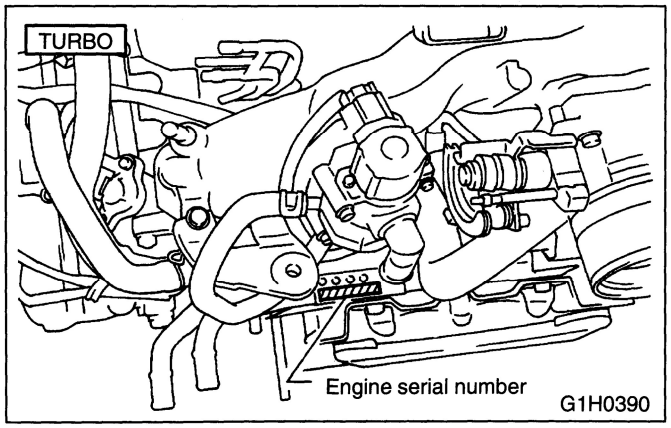

GETtheMANUALS.org

5. Recommended Fuel, Lubricants, Sealants and Adhesives

1. FUEL

1) With catalytic convertor
   - Non-turbo model
     The engine is designed to provide satisfactory performance while producing low exhaust emissions by using **unleaded** gasoline with an octane rating 90 or above (the octane rating selected by the Research Methos).
   - Turbo model
     The engine is designed to provide satisfactory performance while producing low exhaust emissions by using **unleaded** gasoline with an octane rating 95 or above (the octane rating selected by the Research Methos).
2) Without catalytic convertor
   The engine is designed to provide satisfactory performance while producing low exhaust emissions by using gasoline with an octane rating 90 or above (the octane rating selected by the Research Methos).

Lubricants	Specifications	Remarks
• Engine oil	• API Classification: SH or SG or • ILSAC Certified or • CCMC Specification: G4 or G5	• For SAE viscosity number, refer to the following table. • If it is impossible to get SH or SG grade, you may use SF grade.
• Transmission and differential gear oil • AWD rear differential gear oil	• API Classification: GL-5	• For SAE viscosity number, refer to the following table.
• Automatic transmission fluid	• "DEXRON II" type auotmatic transmission fluid	—
• Power steering fluid	• "DEXRON II" or "DEXRON IIE" type automatic transmission fluid	—
• Coolant	• Genuine SUBARU Coolant (Part No. 000016218) (Anti-freeze, anti-corrosive ethylene glycol base)	• For further coolant specifications, refer to the following table.
• Brake fluid	• DOT3 or DOT4	• FMVSS NO. 116 • Avoid mixing brake fluid of different brands to prevent the fluid performance from degrading. • When brake fluid is added, be careful not to allow any dust into the reservoir.
• Clutch fluid	• DOT3 or DOT4	• FMVSS NO. 116 • Avoid mixing clutch fluid of different brands to prevent the fluid performance from degrading. • When clutch fluid is added, be careful not to allow any dust into the reservoir.

GETtheMANUALS.org

Lubricants	Recommended	Application	Equivalent
• Spray lubricants	SUBARU CRC (P/N 004301003)	O_2 sensor	
• Grease	SUNLIGHT 2 (P/N 003602010)	Steering shaft bearing, bushing for manual transmission gear shift system	—
	Valiant grease M-2 (P/N 003608001)	Steering gearbox	—
	Niglube RX-2 (P/N 003606000 or 725191040)	Piston boot of disc brake and sliding pin	—
	Molykote No. 7439 (P/N 725191460)	Contacting surfaces of drum brake shoes and shoe clearance adjuster	—
	Molylex No.2 (P/N 723223010)	BJ and DOJ (for except front axle of AT vehicle) joints of axle shafts	—
	VU-3A702 (P/N 23223GA050)	DOJ (for front axle of AT vehicle) joints of axle shafts	—
	NTG2218 (P/N 28093AA020)	UFJ joints of axle shafts	—
	FX clutch grease (P/N 000040901)	Splines of transmission main shaft	—
	Slicolube G-30M (P/N 004404002)	Control cables and carburetor linkages subject to cold weather, water-pump impeller, door latch, striker, battery terminals, etc.	—

ITEM	API Classification	ILSAC Certification Mark	CCMC Specification	SAE Viscosity No. and Applicable Temperature
Engine oil	SH or SG	AMERICAN PETROLEUM INSTITUTE FOR GASOLINE ENGINES CERTIFIED	G4 or G5	10W-30, 10W-40; 5W-30
•Transmission gear oil •AWD rear differential gear oil	GL-5	—	—	90; 85W; 80W; 75W-90
•Front differential gear oil for automatic transmission	GL-5	—	—	90; 85W; 80W; 80W-90

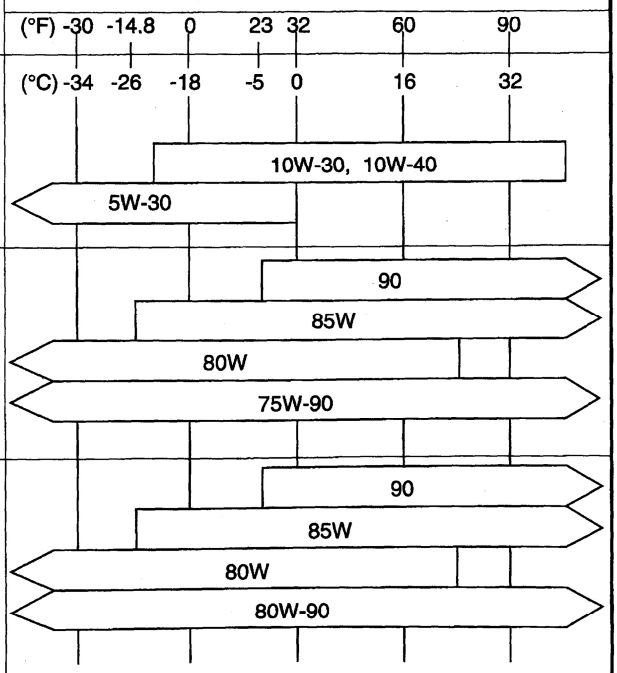

G1H0394

GETtheMANUALS.org

CAUTION:
- **Each oil manufacturer has its base oil and additives. Thus, do not mix two or more brands (Except engine oil).**
- **When replenishing oil, it does not matter if the oil to be added is a different brand from that in the engine; however, use oil having the API classification and SAE viscosity No. designated by SUBARU.**
- **SAE 5W-30 is not recommended for sustained high speed driving.**

NOTE:
If vehicle is used in desert areas with very high temperatures or for other heavy duty applications, the following viscosity oils may be used:
30, 40, 10W-50, 20W-40, 20W-50

Coolant Specifications							
Lowest anticipated atmospheric temperature	SUBARU coolant-to-*water ratio (Volume) %	Specification gravity					Freezing point
		at 10°C (50°F)	at 20°C (68°F)	at 30°C (86°F)	at 40°C (104°F)	at 50°C (122°F)	
Above –30°C (–22°F)	50 — 50	1.084	1.080	1.074	1.068	1.062	–34°C (–35°F)
Above –15°C (5°F)	30 — 70	1.050	1.047	1.042	1.037	1.032	–14.5°C (3.6°F)

* It is recommended that distilled water be used.

CAUTION:
- **Avoid using any coolant or only water other than this designated type to prevent corrosion.**
- **SUBARU's engine is aluminum alloy, and so special care is necessary.**

2. SEALANTS

	Recommended	Application	Equivalent
Sealant	Three Bond 1105 (P/N 004403010)	Rear differential oil drain plug, bearing cap (#5), etc.	Dow Corning's No. 7038
	Three Bond 1215 (P/N 004403007)	Matching surface of oil pump, transmission case, etc. Flywheel and drive plate tightening bolts, etc.	Dow Corning's No. 7038
	Starcalking B-33A (P/N 000018901)	Sealing against water and dust entry through weatherstrips, grommets, etc.	Butyl Rubber Sealant
	Three Bond 1207C (P/N 004403012)	Matching surface of oil pan, oil pressure switch	—
	Three Bond 1102 (P/N 004403006)	Steering gear box adjust screw	—

3. ADHESIVES

Adhesive	Cemedine 5430L	Weatherstrips and other rubber parts, plastics and textiles except soft vinyl parts.	3M's EC-1770 EC-1368
	Cemedine 540	Soft vinyl parts, and other parts subject to gasoline, grease or oil, e.g. trim leather, gear shift boot, door inner remote cover, etc.	3M's EC-776 EC-847 EC-1022 (Spray Type)
	Cemedine 3000	Bonding metals, glass, plastic and rubber parts. Repairing slightly torn weatherstrips, etc.	Armstrong's Eastman 910
	Essex Chemical Crop's Urethane E	Windshield to body panel.	Sunstar 580

GETtheMANUALS.org

7. Lifting, Towing and Tie-down Points

WARNING:
- **Never get under the vehicle while it is supported by a jack.**
- **When jacking up the vehicle, place chocks to hold wheels.**
- **After jacking up the vehicle with garage jack, be sure to support the vehicle with stands for safety.**
- **Be sure to lift vehicle at the same four positions as those for pantograph jack.**

CAUTION:
Be sure to lift, tow and tie-down the vehicle at the designated positions.

1. GARAGE JACK

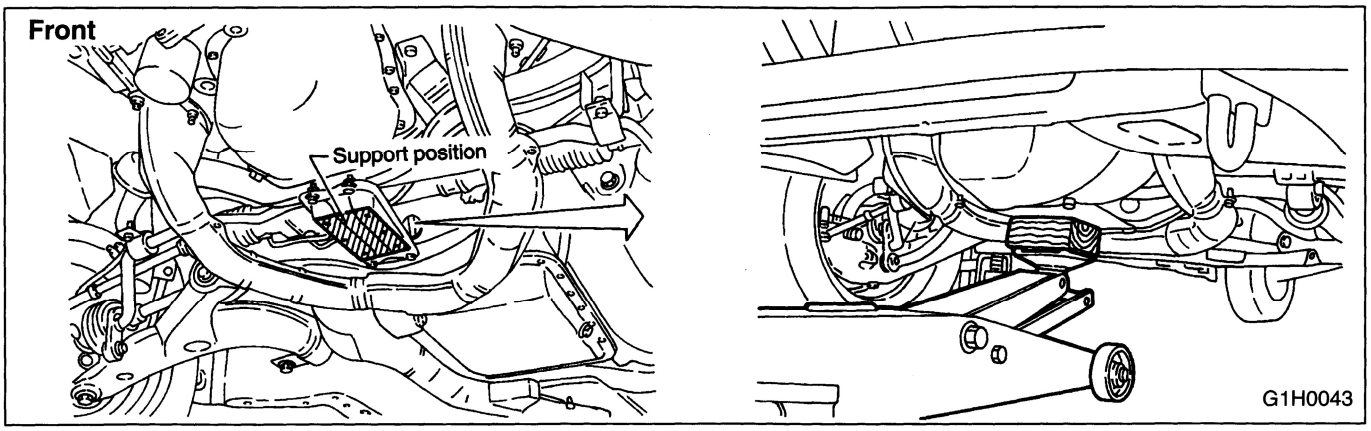

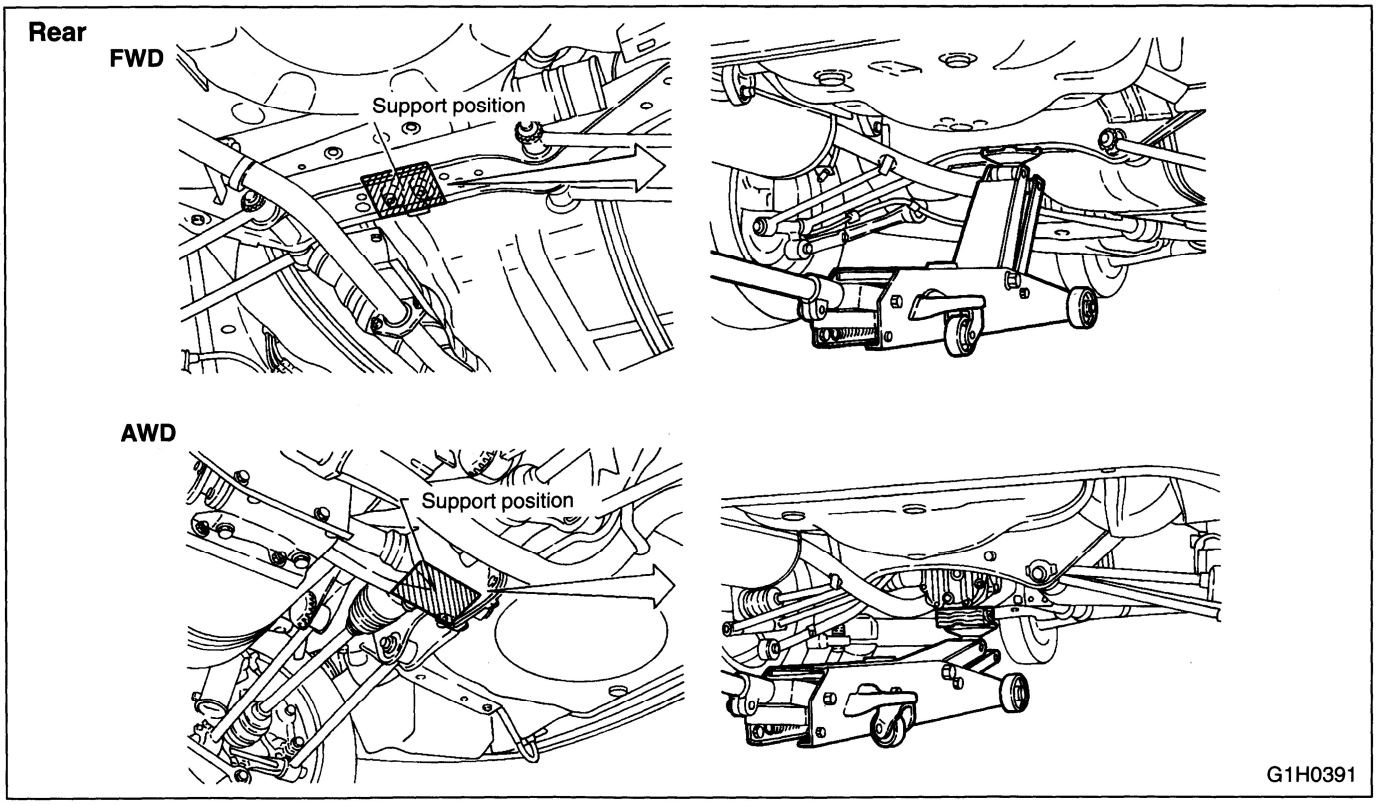

GETtheMANUALS.org

2. PANTOGRAPH JACK, SAFETY STAND AND LIFT

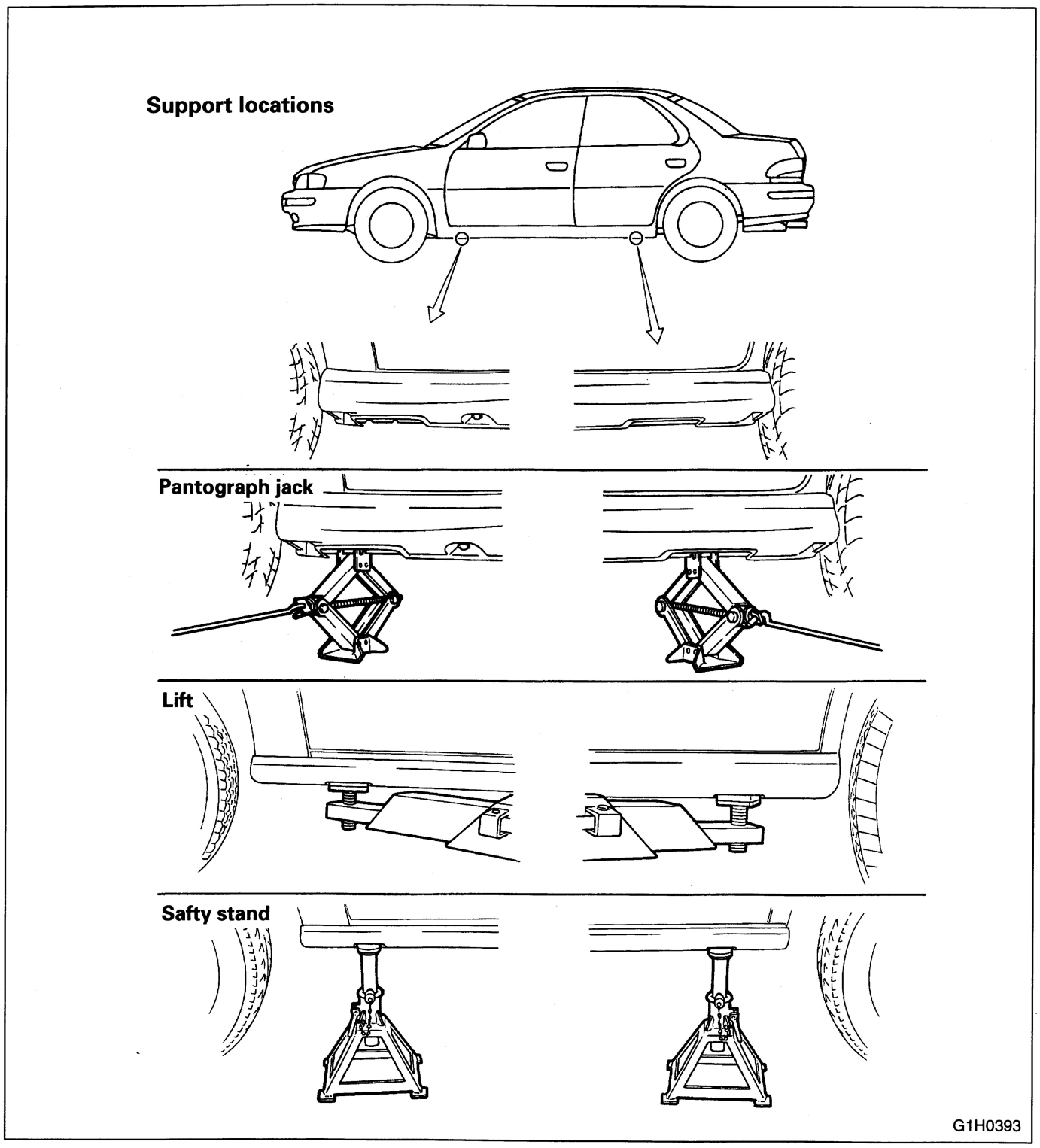

GETtheMANUALS.org

WARNING:
- **Never get under the vehicle while it is supported only by the jack. Always use safety stands to support body when you have to get under the car.**
- **Block the wheels diagonally by wheel chocks.**

CAUTION:
- **Make sure the jack is set at the correct position on the flange of side sill.**
- **Be careful not to set the jack at the air flap portion.**

3. TOWING AND TIE-DOWN HOOKS

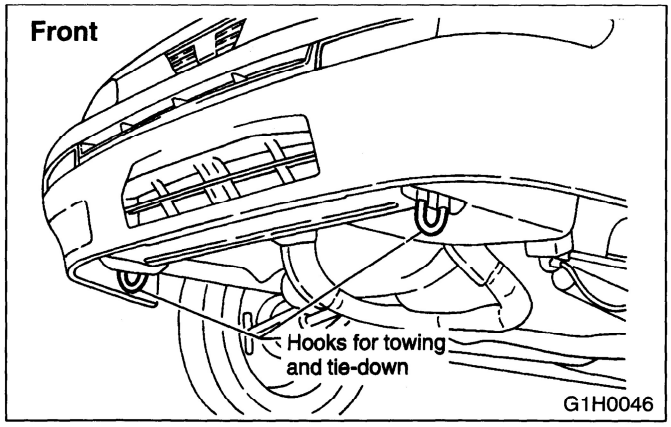

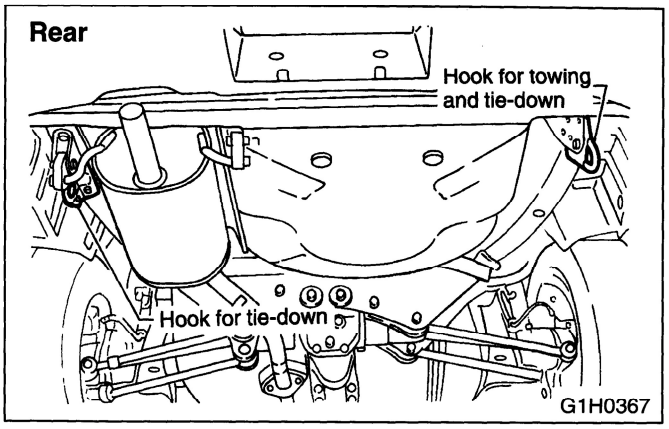

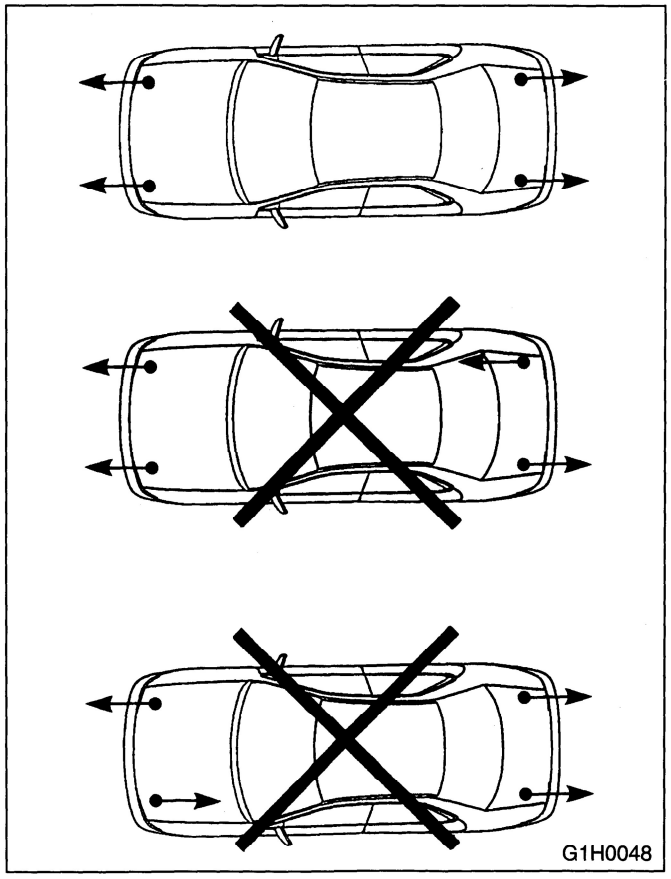

CAUTION:
- **Avoid towing another car with front towing hooks.**
- **Do not tow a vehicle which is heavier than towing vehicle.**
- **Do not apply excessive lateral load to towing hook.**
- **Wrap the towing rope with cloth to prevent damaging bumper, etc.**
- **Keep the vehicle level during towing.**
- **Tie the front and rear tie-down hooks in the same direction.**

GETtheMANUALS.org

PRE-DELIVERY INSPECTION 1-4

	Page
1. List of Pre-delivery Inspection	2
2. Pre-road Test Inspection	4
A: HOOD OPERATION	4
B: DOOR OPERATION, DOOR LOCK AND REGULATOR	
C: TRUNK LID, REAR GATE AND FUEL LID OPERATION	
D: BRAKE FLUID LEVEL AND BRAKE PIPING INSTALLATION	4
E: BATTERY FLUID LEVEL AND BATTERY INSTALLATION	
F: COOLANT LEVEL AND COOLING FAN INSTALLATION	
G: ENGINE OIL LEVEL	5
H: TRANSMISSION AND DIFFERENTIAL GEAR OIL LEVEL	6
J: AIR CLEANER	
K: JACK INSTALLATION	
L: WASHER AND WIPERS	
M: WHEEL NUTS FOR LOOSENESS AND TIRE INFLATION PRESSURE	8
N: SEAT ADJUSTER AND SEAT BELTS	
O: FUSES	
P: LIGHTS AND SWITCHES	
Q: PREPARATION FOR UNDERSIDE INSPECTION ... <Ref. to 1-3 [0700]>	
R: READ MEMORY AND TEST MODE CONNECTORS	
S: INSTALLATION OF STEERING COMPONENTS	
T: EXHAUST PIPE AND MUFFLER	
U: FUEL SYSTEM FOR LEAKAGE	
V: PROTECTOR	8
W: CLUTCH FLUID LEVEL (TURBO MODEL)	9
3. Road Test Inspection	9
A: OPERATION OF INDICATOR LIGHTS AND GAUGES	
B: TACHOMETER, RADIO, ETC.	
C: STARTING CONDITION OF ENGINE	
D: DRIVING TEST	9
4. Post-road Test Inspection	13
A: AUTOMATIC TRANSMISSION FLUID (ATF) LEVEL	
B: POWER STEERING FLUID LEVEL	13
C: WHEEL ALIGNMENT	
D: UNDERSIDE	
E: WATER LEAKAGE	
F: EXTERNAL APPEARANCE AND EQUIPMENT	

GETtheMANUALS.org

1. List of Pre-delivery Inspection

INSPECTION ITEM		CHECK POINTS
2. Pre-road Test Inspection		
A	HOOD OPERATION	1. Operation of hood release and lock 2. Condition of lock 3. Fitting of hood
B	DOOR OPERATION, DOOR LOCK AND REGULATOR	1. Door "Open-close" operation 2. Operation of door release and lock 3. Loose or damaged parts 4. Regulator handle operation 5. Position of door window glass 6. Operation of power window switches 7. Power door locking operation
C	TRUNK LID, REAR GATE AND FUEL LID OPERATION	1. Trunk lid, rear gate and fuel lid "open-close" operation 2. Operation of trunk lid and rear gate (release and lock) 3. Fitting of trunk lid, rear gate and fuel lid 4. Operation of trunk lid, rear gate and fuel lid opener cancel lever
D	BRAKE FLUID LEVEL AND BRAKE PIPING INSTALLATION	1. Brake fluid level in reserve tank 2. Wiring of fluid leveller and its operation 3. Brake booster, master cylinder and pressure control valve for proper installation; brake pipe, brake hose and connectors for proper fitting 4. Leakage in any of the above
E	BATTERY FLUID LEVEL AND BATTERY INSTALLATION	1. External parts 2. Electrolyte level 3. Specific gravity
F	COOLANT LEVEL AND COOLING FAN INSTALLATION	1. Coolant level 2. Cooling fan motor and wiring 3. Water leakage and hose damage
G	ENGINE OIL LEVEL	1. Engine oil level 2. Engine oil leakage or contamination
H	TRANSMISSION AND DIFFERENTIAL GEAR OIL LEVEL	1. Level of transmission gear oil for manual transmission 2. Level of rear differential gear oil for AWD model 3. Level of differential gear oil for automatic transmission
I	DRIVE BELT TENSION	1. Belt tension 2. Damage to belt
J	AIR CLEANER	1. Contamination of air cleaner element 2. Related parts
K	JACK INSTALLATION	1. Installed condition of jack
L	WASHER AND WIPERS	1. Installation of washer tank 2. Checking of fluid level 3. Direction and quantity of washer fluid sprayed 4. Operation of wiper and washer
M	WHEEL NUTS FOR LOOSENESS AND TIRE INFLATION PRESSURE	1. Wheel nut tightening torque 2. Tire inflation pressure and tire specification 3. Damage to tire and rim
N	SEAT ADJUSTER AND SEAT BELTS	1. Front and rear seats, and their facing materials 2. Front seat operation 3. Rear seat folding operation 4. Seat belts and their fit
O	FUSES	1. Fuse installation 2. Spare fuse

GETtheMANUALS.org

	INSPECTION ITEM	CHECK POINTS
P	LIGHTS AND SWITCHES	1. Visual inspection of lights (installation, damage, dirty lenses, water inside, etc.) 2. Operation of all lights and switches 3. Horn operation 4. Operation of head light washer and switch
Q	PREPARATION FOR UNDERSIDE INSPECTION	1. Jacking up and lifting point ... Refer to 1-3
R	READ MEMORY AND TEST MODE CONNECTORS	1. Check engine light flashing 2. Read memory and test mode connectors disconnection
S	INSTALLATION OF STEERING COMPONENTS	1. Installation of universal joints 2. Steering gear box for looseness, play, or backlash, and boots for damage 3. Tie-rod and tie-rod end for proper installation, or damage
T	EXHAUST PIPE AND MUFFLER	1. Installation of exhaust system 2. Exhaust gas leakage from parts or joints
U	FUEL SYSTEM FOR LEAKAGE	1. Installation of fuel hose and pipe. And condition of clamps 2. Fuel system for leakage
V	PROTECTOR	1. Protector removal
W	CLUTCH FLUID LEVEL (TURBO MODEL)	1. Clutch fluid level
3. Road Test Inspection		
A	OPERATION OF INDICATOR LIGHTS AND GAUGES	1. Operation of indicator lights 2. Operation of gauges
B	TACHOMETER, RADIO, ETC.	1. Operation of tachometer, radio, cigarette lighter, etc.
C	STARTING CONDITION OF ENGINE	1. Starting condition of engine
D	DRIVING TEST	1. Operation of foot brake and parking brake 2. Inspect the clutch free play 3. Operation of speedometer (Turbo model for Europe and Australia) 4. Operation of clutch and gear shift 5. Operation of selector lever (Automatic transmission) 6. Operation of steering and position of steering wheel 7. Operation of turn signal cancel cam 8. Operation of ventilation system and heater 9. Abnormal noises or vibration 10. Operation of drive select lever (AWD model only) 11. Operation of air conditioning 12. Operation of cruise control
4. Post-road Test Inspection		
A	AUTOMATIC TRANSMISSION FLUID LEVEL	1. Level of automatic transmission fluid
B	POWER STEERING FLUID LEVEL	1. Level of power steering fluid
C	WHEEL ALIGNMENT	1. Toe of front and rear wheels 2. Camber of front wheels
D	UNDERSIDE	1. Leakage of engine oil, transmission gear oil, differential gear oil, etc. 2. Leakage of coolant 3. Leakage of brake fluid 4. Loose suspension mountings or steering mounting
E	WATER LEAKAGE	1. Water leakage by pouring water
F	EXTERNAL APPEARANCE AND EQUIPMENT	1. Paint 2. Scratches and damage to glass 3. Rust formation 4. Contamination of interior parts 5. Installation of equipment

GETtheMANUALS.org

2. Pre-road Test Inspection

A: HOOD OPERATION

CHECK POINTS

1. **Operation of hood release and lock**
2. **Condition of lock**
3. **Fitting of hood**

- **Check the opening, closing and locking of hood.**

1) Pull the hood lock release knob in the passenger compartment. (The hood will lift a step.) Check if the cable moves easily and lightly without dragging.

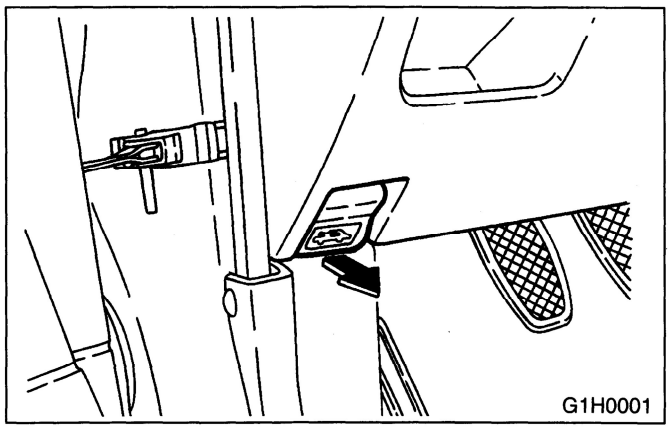

2) Release the lock by pushing the lock lever while pushing the hood down with slight pressure.
Hold the hood open with the stay.
Check the way the safety lock mechanism is released and that the hood opens and closes without any abnormal noise and does not contact the body.

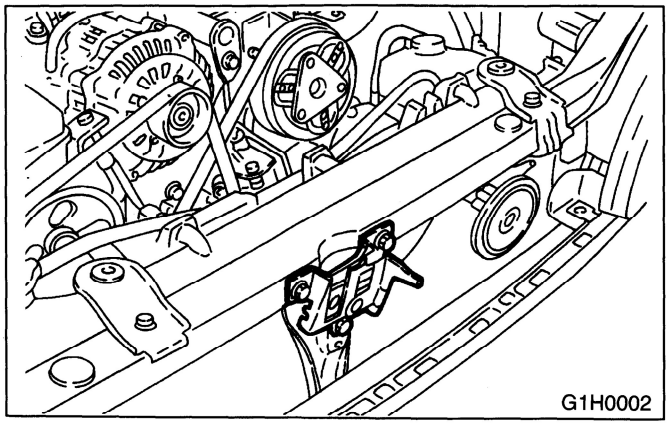

3) Remove the stay and lower the hood until it approaches about 10 cm (3.9 in.) from the closed position and let it drop. After closing the hood, be sure the hood is securely locked.
4) Confirm by repeating the steps 1) to 3) above two or three times.

- **Check the installation of hood.**

After having closed the hood, ensure the hood fits properly.

NOTE:
- The clearance between the hood and front fender is uniform.
- The hood's front end is parallel with the front fender.
- The slope of hood is the same as the parts of body surrounding it.
- The hood and weatherstrip stick fast to each other.

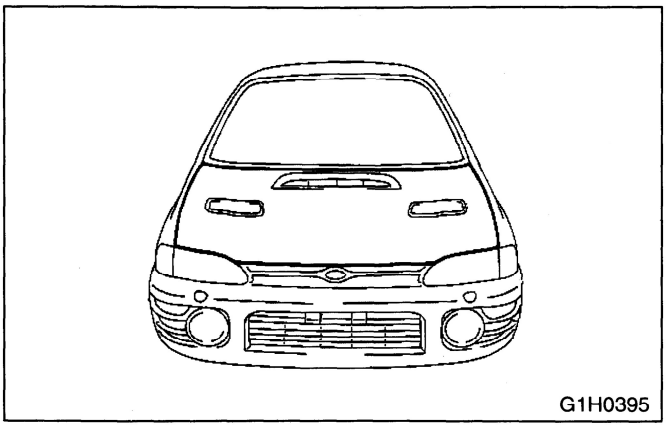

D: BRAKE FLUID LEVEL AND BRAKE PIPING INSTALLATION

CHECK POINTS

1. **Fluid level in brake reserve tank**
2. **Wiring of fluid leveller and its operation**
3. **Brake booster, master cylinder and pressure control valve for proper installation; brake pipe, brake hose and connectors for proper fitting**
4. **Leakage in any of the above**

- **Check fluid leveller operation while pushing it down with a screwdriver.**

GETtheMANUALS.org

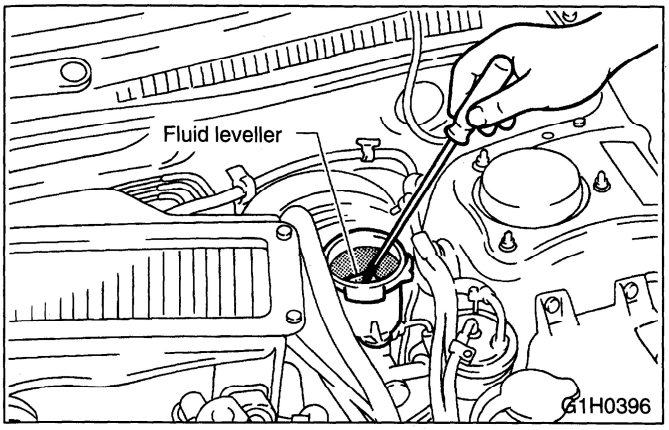

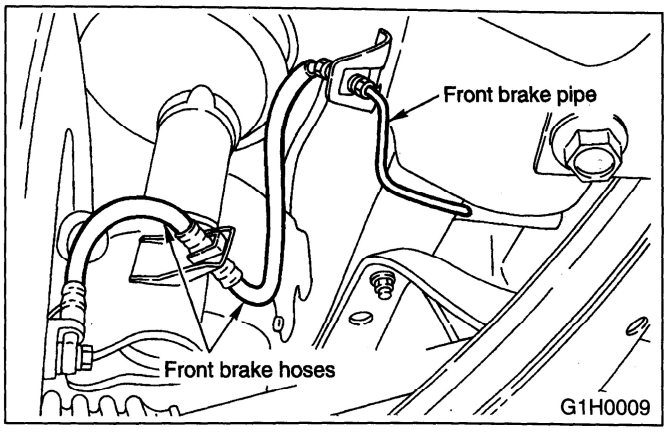

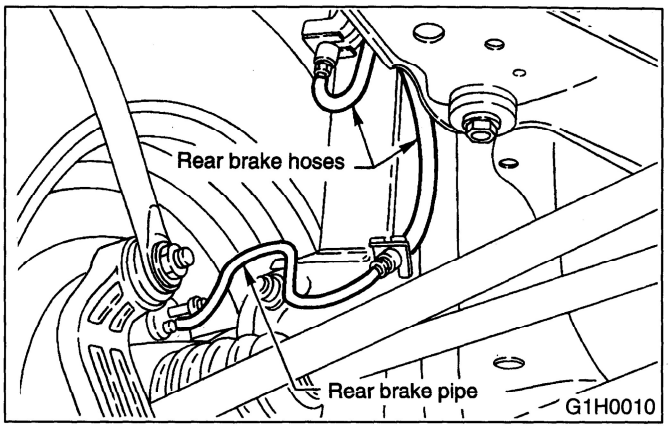

Recommended brake fluid
FMVSS No. 116, fresh DOT3 or DOT4 brake fluid

CAUTION:
- **The fluid level must be kept at "MAX" level.**
- **Do not mix different brands of brake fluid.**
- **When adding brake fluid, be careful not to allow any dirt, water, or oil around the fluid tank to enter it.**
- **Use special care not to spill any brake fluid on the vehicle's painted surfaces, because it will quickly erode them. In case of an accident, wipe it off as quickly and as cleanly as possible.**

NOTE:
- Never use engine oil, gear oil, or any mineral oil.
- Use extreme care not to allow any water to get into the fluid; water in the brake fluid will lower the fluid's boiling point and cause vapor-lock.
- If too much brake fluid is missing, check the brake line for possible leakage.
- After adding brake fluid, any excess must be stored in a tightly sealed container.
- When checking the operation of leveller, use clean screwdriver or the like and be careful not to allow dirt or dust to get into the tank.

1) Check that the brake pipes, hoses and connectors are in good condition.
   (1) Brake fluid is not oozing or leaking from the brake fluid lines.
   (2) The connectors and clamps are not loose.
   (3) There is no possibility of the pipes and hoses contacting the body or other mechanical parts due to vibration during running.

G: ENGINE OIL LEVEL

CHECK POINTS

1. **Engine oil level**
2. **Engine oil leakage or contamination**

1. Check the engine oil level

The level should be within the specified range marked on the gauge.

NOTE:
- Check engine oil level before starting the engine, when engine oil is cold, to obtain correct level reading. After stopping a hot engine, wait about 5 minutes until oil returns to oil pan before checking oil level. Oil level reading will be slightly higher than when engine is cold due to oil expansion. It is advisable to check oil level each time oil is replenished.
- Insert the oil level gauge into guide hole.

GETtheMANUALS.org

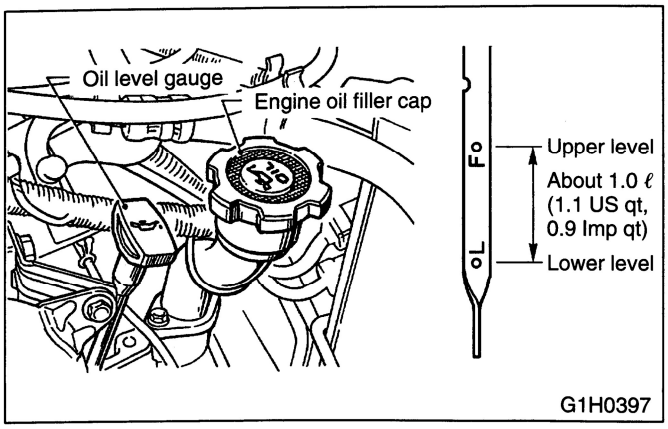

Recommended oil
API classification: SH or SG,
CCMC specification G4 or G5,
or ILSAC certification mark is displayed on the container
(If it is impossible to get SH or SG grade, you may use SF grade.)

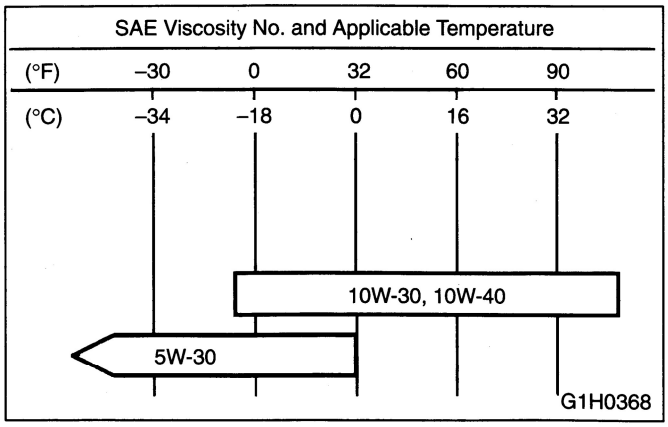

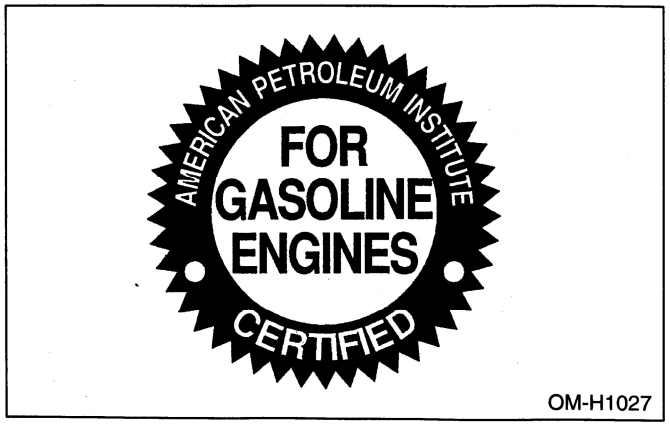

CAUTION:
- **When replenishing oil, it does not matter if the oil to be added is a different brand from that in the engine; however, use oil having the API classification and SAE viscosity No. designated by SUBARU.**
- **SAE 5W-30 is not recommended for sustained high speed driving.**

H: TRANSMISSION AND DIFFERENTIAL GEAR OIL LEVEL

CHECK POINTS

1. **Level of transmission gear oil for manual transmission**
2. **Level of rear differential gear oil for AWD model**
3. **Level of differential gear oil for automatic transmission**

1. Check the level of transmission gear oil for manual transmission

NOTE:
The level should be within the specified range marked on the gauge.

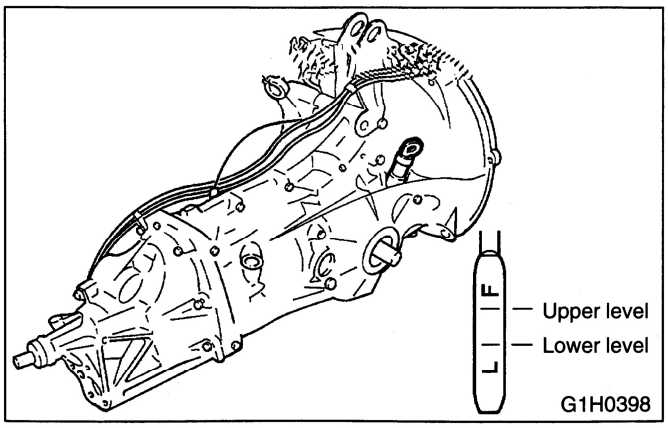

GETtheMANUALS.org

- **Recommended oil**

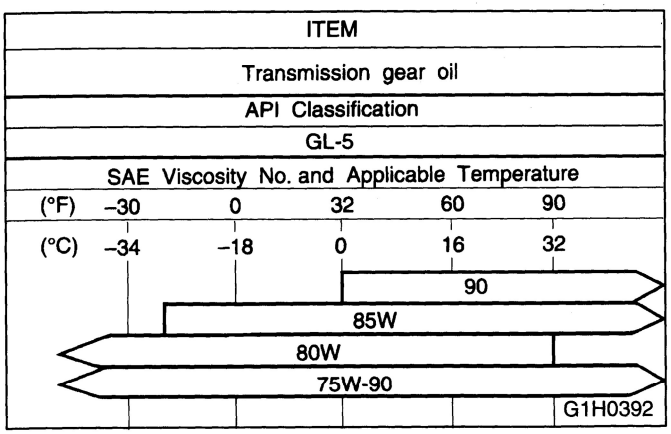

CAUTION:
When inserting the level gauge into transmission gear, align the protrusion on the side of the top part of the level gauge with the notch in the gauge hole.

2. Check the level of rear differential gear oil for AWD model

The oil level must be kept above the bottom of the filler bolt or plug. If below that level, add oil up to the bottom line.

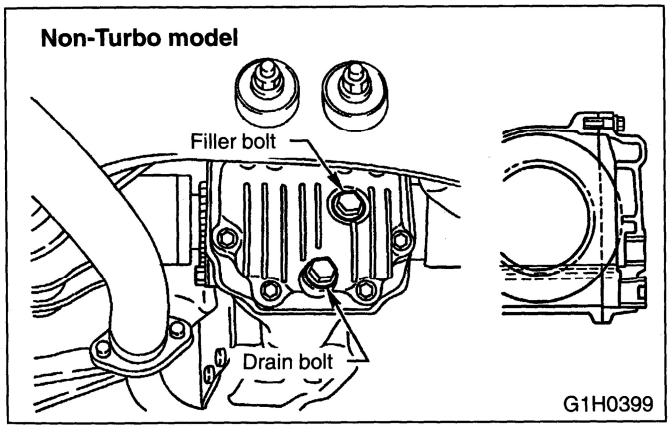

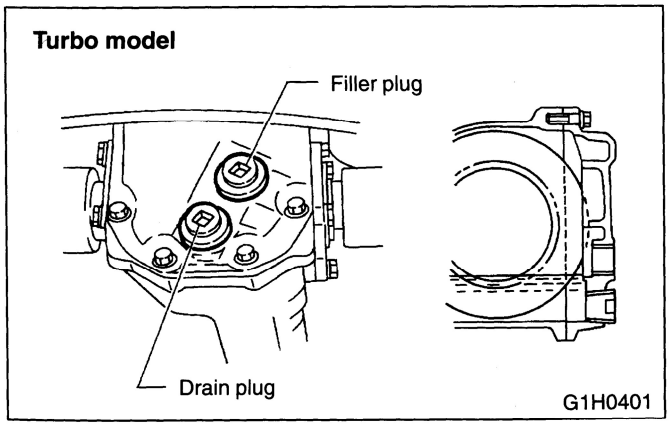

- **Recommended oil**

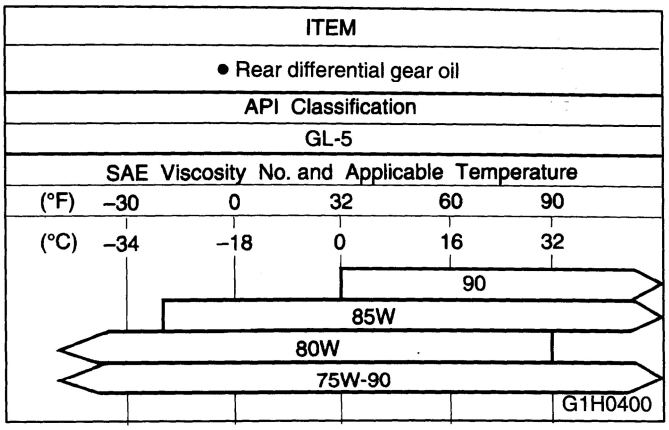

CAUTION:
Each manufacturer uses different base oils and additives. Thus, do not mix brands.

3. Check the level of front differential gear oil for automatic transmission

NOTE:
The level should be within the specified range marked on the gauge.

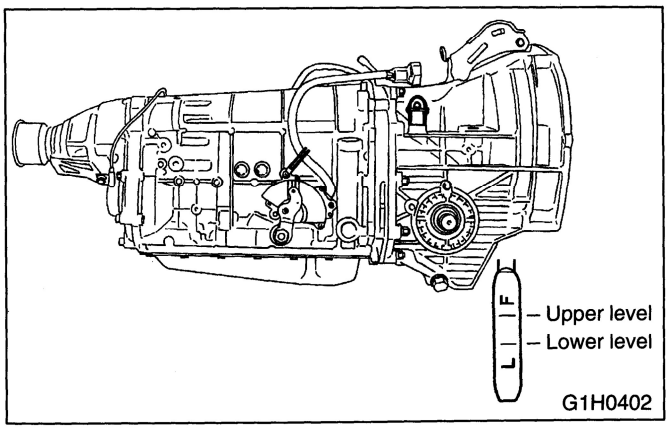

- **Recommended oil**

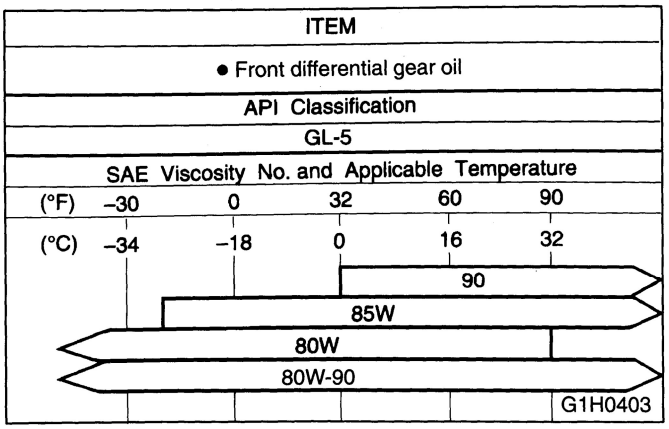

GETtheMANUALS.org

CAUTION:
When inserting the level gauge into differential gear, align the protrusion on the side of the top part of the level gauge with the notch in the gauge hole.

M: WHEEL NUTS FOR LOOSENESS AND TIRE INFLATION PRESSURE

CHECK POINTS

1. **Wheel nut tightening torque**
2. **Tire inflation pressure and tire specification**
3. **Damage to tire and rim**

Tightening torque:
88 ± 10 N.m
(9 ± 1 kg-m, 65 ± 7 ft-lb)

NOTE:
- When checking the wheel nuts, be sure to use a torque wrench, and tighten the nuts to the specified torque.
- After inspecting and adjusting the tire pressure, be sure to put the valve cap back.

CAUTION:
Check that all tires are adjusted to the specified tire inflation pressure.

Tire size	Tire inflation pressure kPa (kg/cm^2, psi)	
	Front	Rear
P165/80R13 83H	220 (2.2, 31)	200 (2.0, 29)
P175/70R14 84H	220 (2.2, 31)	200 (2.0, 29)
P205/55R15 87V	226 (2.3, 33)	220 (2.2, 31)
T type tire	410 (4.2, 58)	

V: PROTECTOR

CHECK POINTS

1. **Protector removal**

The following parts are covered to prevent splashing of wax. Remove protector.

NOTE:
Label of rear differential is covered by tape. Remove it.

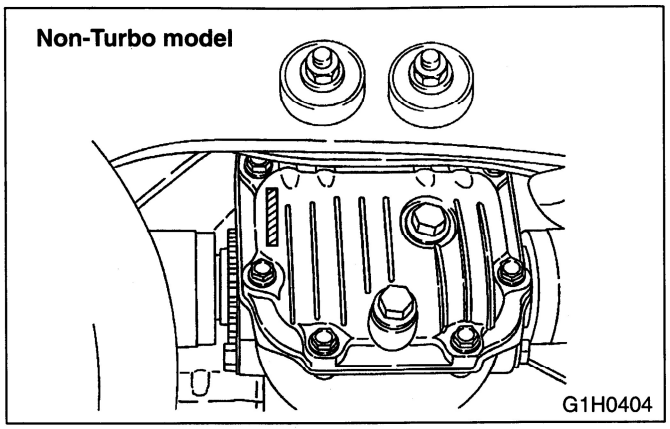

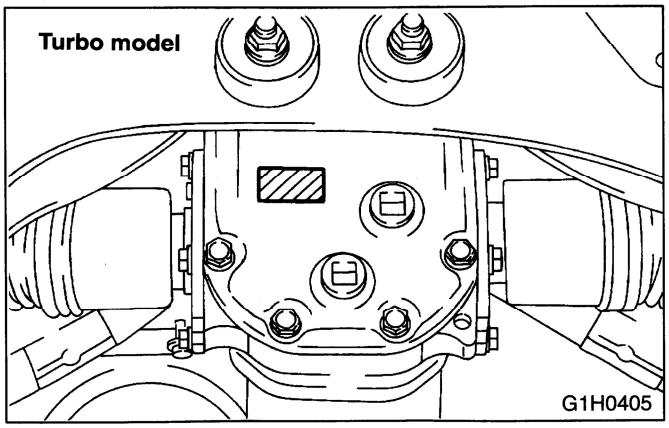

GETtheMANUALS.org

W:CLUTCH FLUID LEVEL (TURBO MODEL)

CHECK POINTS

1. Clutch fluid level

Check the fluid level using the scale on the outside of the clutch master cylinder tank. If the level is below "MIN", add clutch fluid to bring it up to "MAX".

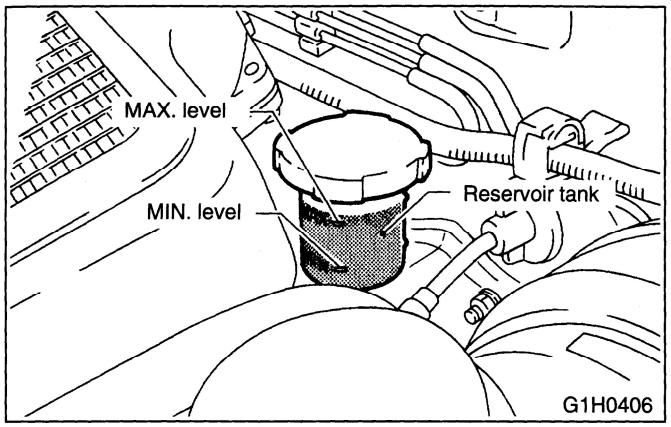

Recommended cluth fluid:
FMVSS No. 116, fresh DOT 3 or DOT 4 brake fluid

CAUTION:
- **Avoid mixing different brands of brake fluid to prevent degradation of the fluid.**
- **Be careful not to allow dirt or dust to get into the reservoir tank.**
- **Use fresh DOT 3 or DOT 4 brake fluid when refilling fluid.**

3. Road Test Inspection

D: DRIVING TEST

CHECK POINTS

1. **Operation of foot brake and parking brake**
2. **Inspect the clutch pedal free play**
3. **Operation of speedometer (Turbo model for Europe and Australia)**
4. **Operation of clutch and gear shift**
5. **Operation of select lever (Automatic transmission)**
6. **Operation of steering and position of steering wheel**
7. **Operation of turn signal cancel cam**
8. **Operation of ventilation system and heater**
9. **Abnormal noises or vibration**
10. **Operation of drive select lever (AWD model only)**
11. **Operation of air conditioner**
12. **Operation of cruise control**

1. Check the foot and parking brakes' operation

1) Drive on a dry, level, paved road, and apply normal braking. Look for uneven or improper operation, or pulling to one side.

CAUTION:
Be sure to perform this test in a safe area.

2) Press the brake pedal in two or three times, and keep it fully depressed. Make sure that the brake can be kept that way for at least five seconds. Also check for air in the brake system, or brake fluid leakage.

3) Perform the adjustment of operating rod assembly as follows:

(1) Be sure engine is off. (No vacuum is applied to brake booster).

(2) There should be play between brake booster clevis and pin at brake pedal installing portion.
[Depress brake pedal pad with a force of less than 10 N (1 kg, 2 lb) to a stroke of 1 to 3 mm (0.04 to 0.12 in).]

GETtheMANUALS.org

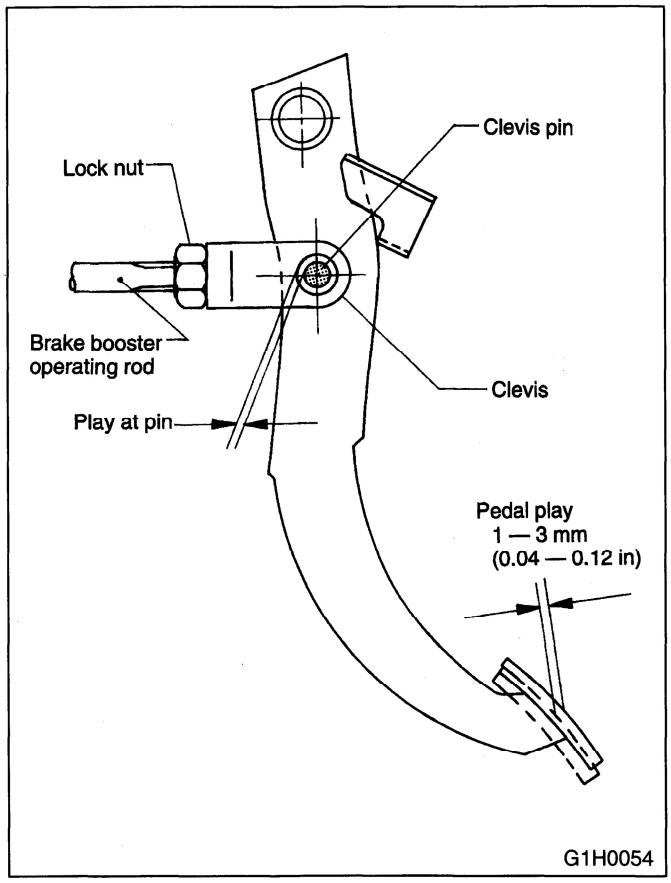

(3) Depress the surface of brake pad by hand.
(4) If there is no free play between clevis pin and clevis, loosen lock nut for operating rod and adjust operating rod by turning in the direction that it is shortened.
(5) After adjustment, make sure there is no brake dragging.

4) Pull the parking brake lever completely out, and check its operation. Also check the ratchet for normal functioning.
Check the parking brake lever stroke. If it is out of specification, adjust it by turning adjusting nut at parking brake lever.

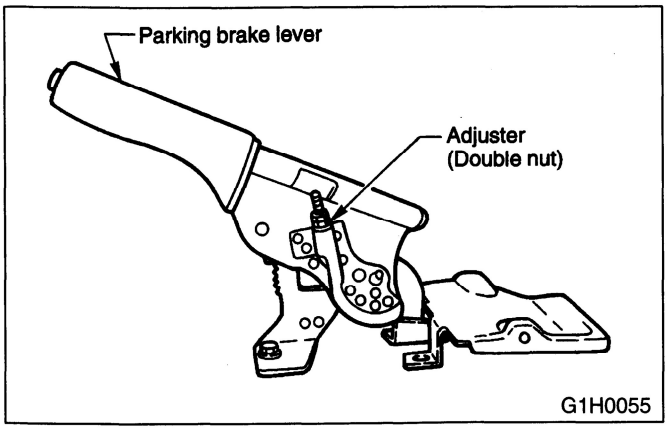

Parking brake lever stroke:
Standard:
7 — 8 notches/196 N (20 kg, 44 lb)

2. Inspect the clutch pedal free play

1) Mechanical application type
(1) Lightly press the clutch pedal down with a finger to check the free play.

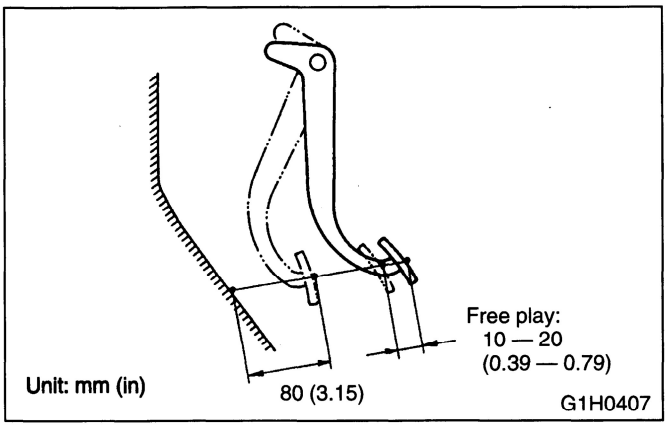

(2) If it is out of specification, adjust it by turning adjusting nut on engine side end of clutch cable at release fork.

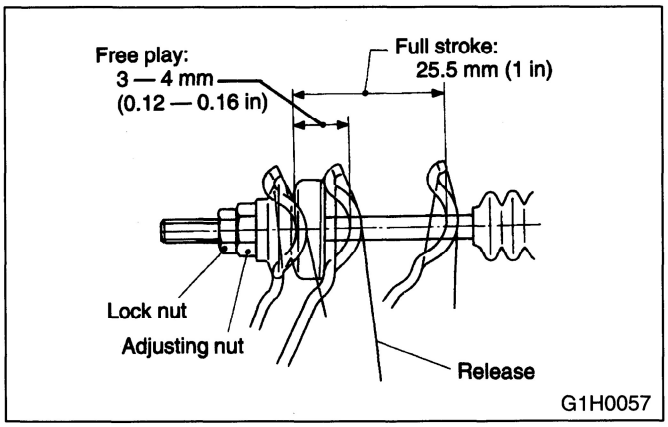

GETtheMANUALS.org

Tightening torque:
4.5 — 7.5 N.m
(0.45 — 0.75 kg-m, 3.5 — 5.5 ft-lb)

2) Hydraulic application type
(1) Lightly press the clutch pedal down with a finger to check the free play.
(2) If it is out of specification, loosen lock nut for push rod and adjust push rod by turning in the direction that shortens or lengthens it.

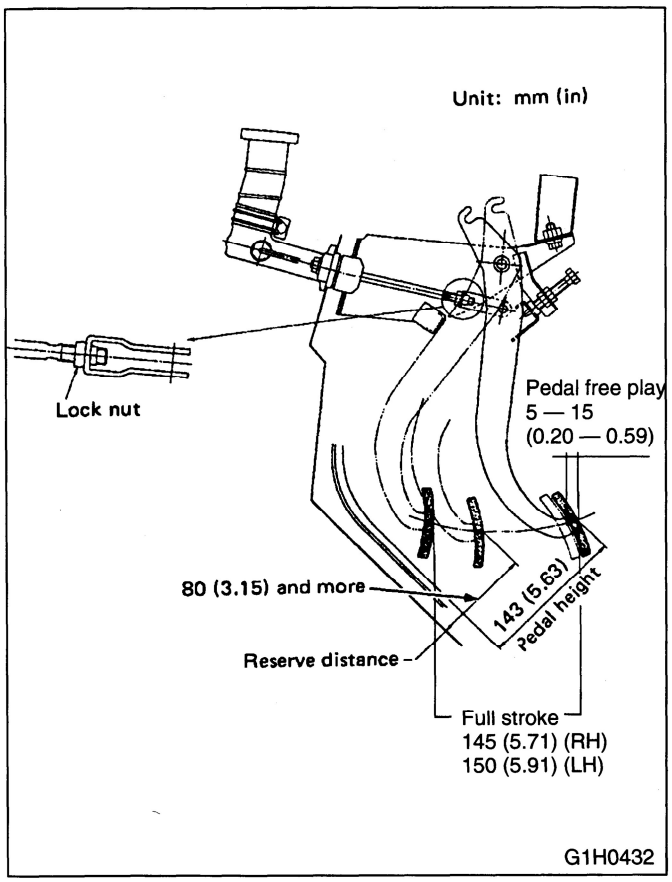

Standard free play:
5 — 15 mm (0.20 — 0.59 in.)

Tightening torque (Adjusting lock nut):
9 — 11 N.m
(0.9 — 1.1 kg-m, 6.5 — 8.0 ft-lb)

3. Operation of speedometer (Turbo model for Europe and Australia)

1) Drive the car at various speeds, and make sure that the pointer of speedometer indicates the position of each speed correctly.

4. Check the operation of clutch and gear shifting

1) With the engine idling and the shift lever in neutral, gradually depress the clutch pedal, to see if it generates any abnormal noise.

NOTE:
Carefully compare a normal clutch's operating sounds to the clutch being tested.

2) Pull the parking brake lever completely out, and place wheel chocks under the tires. Then depress the clutch pedal completely, and place the shift lever in 5th speed.
Raise engine rpm a little, gradually engage the clutch, and see if the engine stalls.
If the engine stalls, it means that the clutch is not slipping.

CAUTION:
- **Be sure to perform this test in a safe area.**
- **Do not repeat this test.**

3) Remove the wheel chocks, and return the shift lever to neutral, then check the gear shifting mechanism for excessive play.
4) Drive the car at various speeds. While depressing the clutch pedal completely, move the gear shift lever into each position, and check for any unusual play or unusual resistance.

5. Operation of selector lever (Automatic transmission models)

1) Place the selector lever in each position, and make sure that the pointer indicates the position of each range correctly.

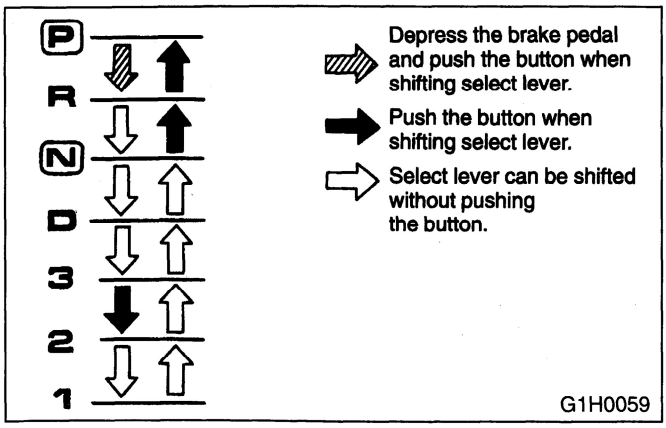

GETtheMANUALS.org

6. Operation of steering and position of steering wheel

1) Check the steering wheel for free play.

Steering wheel free play:
0 — 17 mm (0 — 0.67 in)

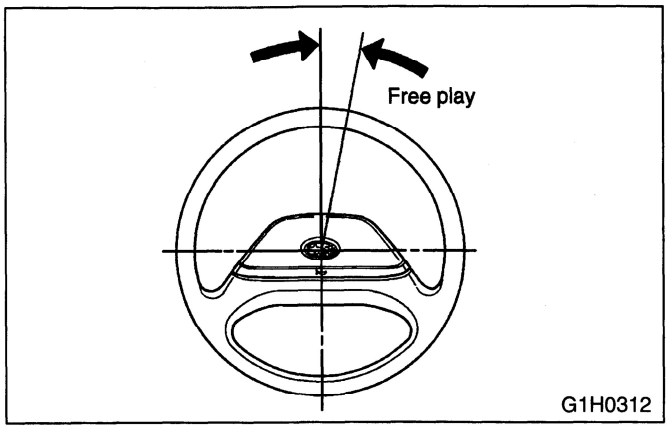

2) With the car moving straight ahead, check for hard steering, shimmy, or other abnormalities.
3) Make a turn, and check for hard or heavy steering wheel operation, or poor stability.

7. Operation of turn signal cancel cam

Make a right or left turn with the turn signal on, and make sure that the turn signal switch returns automatically to the OFF position when the steering wheel is returned to the straight ahead position.

8. Operation of ventilation system and heater

1) While driving, move the control lever and dial into each position, and check the ventilation system's operation. Also check for unusual vibration or noises.
2) Move the temperature control lever and fan switch, and make sure that warm air is discharged into the compartment.

9. Abnormal noises or vibration

1) When starting the engine, and while driving the vehicle, check the engine, transmission, body, suspension, and steering system for any unusual noises or vibration.
Do this when idling the engine, accelerating, decelerating, and running at low, middle and high speeds.
2) Depress the accelerator pedal, and make sure that the engine rpm increase smoothly and that the vehicle accelerates smoothly.
3) While driving, turn the steering wheel right and left to test the vehicle's stability and response.

CAUTION:
Be sure to perform this test in a safe area.

10. Operation of AWD drive selector lever (AWD dual-range models)

While driving, check the operation of the AWD drive select. Also check that indicator light on instrument panel comes on.

CAUTION:
Never shift the drive select while the wheels are spinning or slipping.

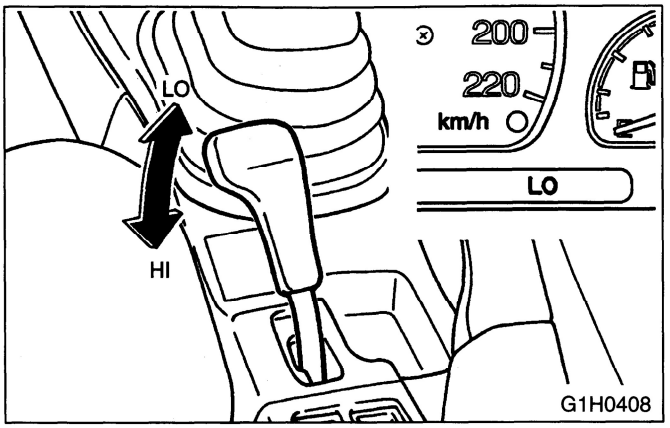

11. Operation of air conditioning

Turn the air conditioning switch "ON", and make sure that cool air is discharged into the compartment.

12. Operation of cruise control

Check the operation of the cruise control according to "Owner's manual".

CAUTION:
Be sure to conduct driving tests using a chassis dynamometer with front wheels set in operation, or tests on an authorized race course or similar place.

GETtheMANUALS.org

4. Post-road Test Inspection

B: POWER STEERING FLUID LEVEL

CHECK POINTS
1. Level of power steering fluid

The power steering fluid shoud be maintained at a proper level.
Check level as follows:
1) Drive the car several miles or kilometers to bring power steering system up to the normal operating temperature of about 60°C (140°F).
2) Park the car on a level surface and stop the engine.
3) Remove the level gauge and wipe it clean.
4) Reinstall the level gauge firmly.
5) Remove it again and read the level on the "HOT" side.
If the fluid level is at the lower level or below it, add recommended power steering fluid up to the high level. When the fluid level is to be checked without warming up the power steering system [at approximately 21°C (70°F)], read the fluid level at the "COLD" position of the level gauge.

CAUTION:
The available power steering fluid is ATF DEXRON II or II E.
Be sure to use the recommended fluid.
When power steering fluid is added, be careful not to allow any dust into the tank.

GETtheMANUALS.org

PERIODIC MAINTENANCE SERVICES 1-5

Page

SCHEDULE OF INSPECTION AND MAINTENANCE SERVICES **2**

1. Drive Belt(s) [Except Camshaft] (Inspect drive belt tension)
2. Camshaft Drive Belt (Timing Belt) 4
3. Engine Oil 6
4. Engine Oil Filter
5. Replace Engine Coolant and Inspect Cooling System, Hoses and Connections 9
6. Replace Fuel Filter and Inspect Fuel System, Lines and Connections
7. Air Cleaner Element
8. Spark Plugs 13
9. Idle Mixture [Except for Catalyst Model]
10. Transmission/Differential (Front and rear) Lubricants (Gear oil) 15
11. Automatic Transmission Fluid
12. Brake Fluid
13. Disc Brake Pads and Discs/Front and Rear Axle Boots and Axle Shaft Joint Portions 18
14. Brake Linings and Drums
15. Inspect Brake Lines and Check Operation of Parking and Service Brake System
16. Clutch Operation System 19
17. Steering and Suspension System 21
18. Front and Rear Wheel Bearing Lubricant

GETtheMANUALS.org

SCHEDULE OF INSPECTION AND MAINTENANCE SERVICES

Continue periodic maintenance beyond 100,000 km (60,000 miles) or 48 months by returning to the first column of the maintenance schedule and adding 100,000 km (60,000 miles) or 48 months to the column headings.

Symbols used:
R: Replace
I: Inspect, and then adjust, correct or replace if necessary.
P: Perform
(I): Recommended service for safe vehicle operation

	MAINTENANCE ITEM	MAINTENANCE INTERVAL (Number of months or km (miles), whichever occurs first)						REMARKS
		Months		12	24	36	48	
		x 1,000 km	1.6	25	50	75	100	
		x 1,000 miles	1	15	30	45	60	
1	Drive belt(s) (Except camshaft)			I	I	I	I	
2	Camshaft drive belt (Timing belt)						R	
3	Engine oil		Change every 12,500 km (7,500 miles) or 6 months whichever occurs first.					See NOTE 1)
4	Engine oil filter		Change every 12,500 km (7,500 miles) or 6 months whichever occurs first.					See NOTE 1)
5	Replace engine coolant and inspect cooling system, hoses and connections				P		P	
6	Replace fuel filter and inspect fuel system, line and connections				P		P	See NOTE 3)
7	Air cleaner element			I	R	I	R	See NOTE 2)
8	Spark plugs	Except Sweden		R	R	R	R	
		For Sweden	Change every 30,000 km (18,500 miles).					
		For Turbo					R	
9	Idle mixture [Except for catalyst model]		I	I	I	I	I	
10	Transmission/differential (Front & rear) lubricants (Gear oil)				R		R	See NOTE 4)
11	Automatic transmission fluid				R		R	See NOTE 4)
12	Brake fluid				R		R	See NOTE 5)
13	Disc brake pads and discs/Front and rear axle boots and axle shaft joint portions			I	I	I	I	See NOTE 3)
14	Brake linings and drums (Parking brake)				I		I	See NOTE 3)
15	Inspect brake lines and check operation of parking and service brake system			P	P	P	P	See NOTE 3)
16	Clutch operation system			I	I	I	I	Adjust pedal free play at 1,600 km (1,000 miles)
17	Steering and suspension system			I	I	I	I	See NOTE 3)
18	Front and rear wheel bearing lubricant						(I)	

GETtheMANUALS.org

NOTES:

1) **When the vehicle is used under severe driving conditions mentioned below*, the engine oil and oil filter should be changed more frequently.**
2) **When the vehicle is used under severe driving conditions mentioned below*, the air cleaner element should be replaced more frequently.**
3) **When the vehicle is used under severe driving conditions mentioned below*, inspection should be performed at every 12,500 km (7,500 miles) or 6 months whichever occurs first.**
4) **When the automatic transmission vehicle is frequently operated under severe conditions, such as pulling trailer or driving on sand, replacement of automatic transmission fluid and front differential gear oil should be performed more frequently.**
5) **When the vehicle is used under following areas, change fluid every 25,000 km (15,000 miles) or 12 months whichever occurs first.**
   (1) High humidity areas
   (2) Mountainous areas

   * Severe driving conditions:
   (1) Operating in extremely cold weather (Items 3, 4 and 17 only)
   (2) Pulling trailer (Items 3, 4, 13 and 14 only)
   (3) Repeated short trips (Items 3, 4, 13 and 14 only)
   (4) Driving in dusty roads (Items 7, 13, 14 and 17 only)
   (5) Driving in rough and/or muddy roads (Items 13, 14 and 17 only)
   (6) Driving in areas using road salt or other corrosive materials (Items 6, 13, 14, 15 and 17 only)
   (7) Living in coastal areas (Items 6, 13, 14, 15 and 17 only)

GETtheMANUALS.org

2. Camshaft Drive Belt (Timing Belt)

MAINTENANCE INTERVAL [Number of months of km (miles) whichever occurs first]					
Months		12	24	36	48
x1,000 km	1.6	25	50	75	100
x1,000 miles	1	15	30	45	60
					R

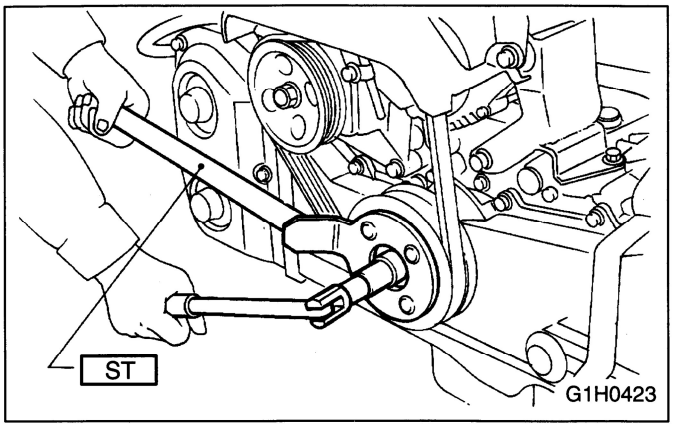

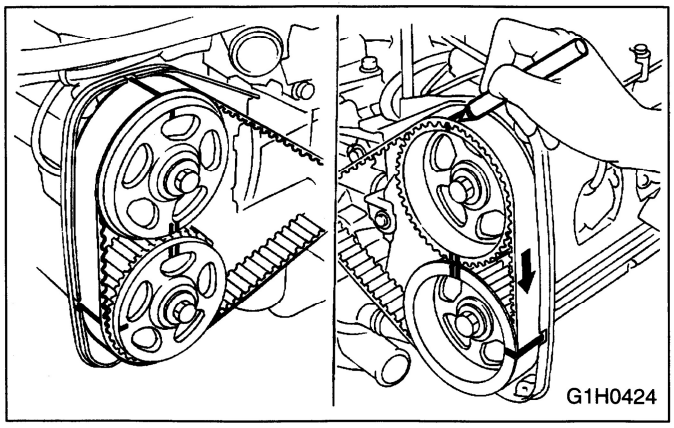

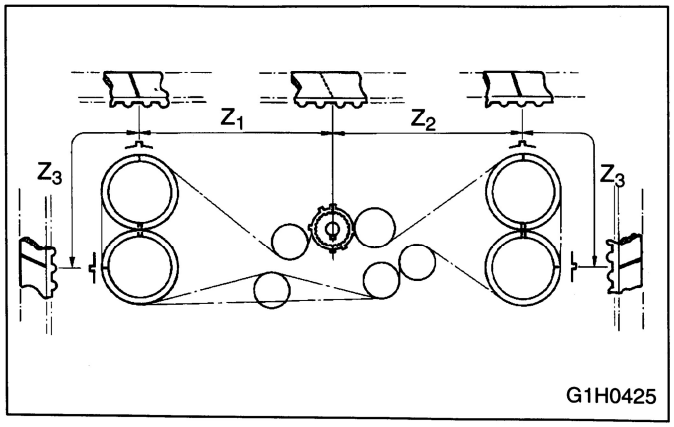

A: REPLACEMENT

2. DOHC MODEL

1) Refer to 1) to 7) of camshaft drive belt. <Ref. to 1-5 [02A0]>
2) Remove pulley bolt. To lock crankshaft use ST.

ST 499977000
CRANKSHAFT PULLEY WRENCH

3) Remove crankshaft pulley.
4) Remove left side belt cover.
5) Remove right side belt cover.
6) Remove front belt cover.
7) If alignment mark and/or arrow mark (which indicates rotation direction) on timing belt fade away, put new marks before removing timing belt as follows:
   (1) Turn crankshaft and align alignment marks on crankshaft, and left and right camshaft sprockets with notches of belt cover and cylinder block.

   ST 499987500 CRANKSHAFT SOCKET

   (2) Using white paint, put alignment and/or arrow marks on timing belts in relation to the sprockets.
8) Loosen tensioner adjuster mounting bolts.
9) Remove belt idler.
10) Remove belt idler No.2.
11) Remove timing belt.

Z_1, 54.5 tooth length
Z_2, 51 tooth length
Z_3, 28 tooth length

GETtheMANUALS.org

B: INSTALLATION

2. DOHC MODEL

To install, reverse order of removal procedures. For installation of tensioner adjuster and camshaft drive belt, refer to "2-3b ENGINE" [W2C0].

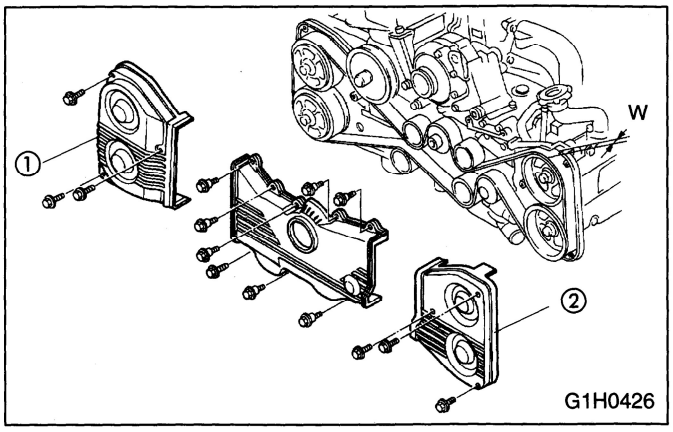

C: INSPECTION

2. DOHC MODEL

1) Remove left and right timing belt covers ① and ②.
2) While cranking engine at least four rotations, check timing belt back surface for cracks or damage. Replace faulty timing belt as needed.
3) Measure timing belt width W. If it is less than 30 mm (1.18 in), check idlers, tensioner, water pump pulley and cam sprocket to determine idler alignment (squareness). Replace worn timing belt.
4) Install left and right timing belt covers ① and ②.

GETtheMANUALS.org

3. Engine Oil

MAINTENANCE INTERVAL [Number of months of km (miles) whichever occurs first]					
Months		12	24	36	48
x1,000 km	1.6	25	50	75	100
x1,000 miles	1	15	30	45	60
	Change every 12,500 km (7,500 miles) or 6 months. Whichever occurs first				

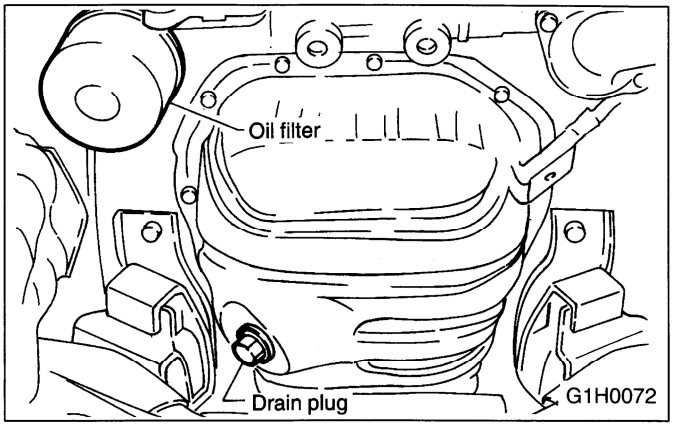

A: REPLACEMENT

1) Drain engine oil by loosening engine oil drain plug.

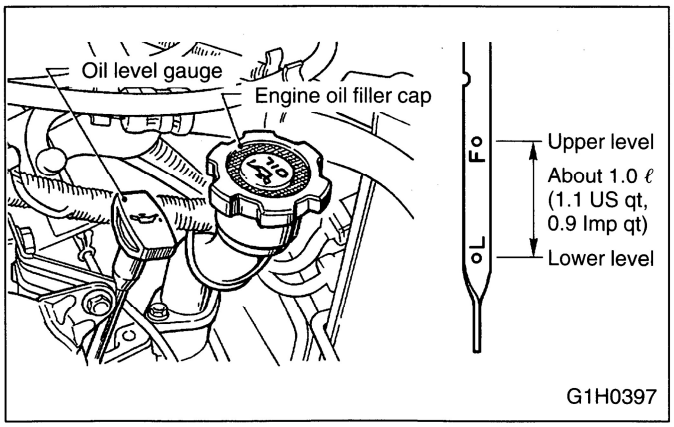

2) Open engine oil filler cap for quick draining of the engine oil.
Replace drain plug gasket.

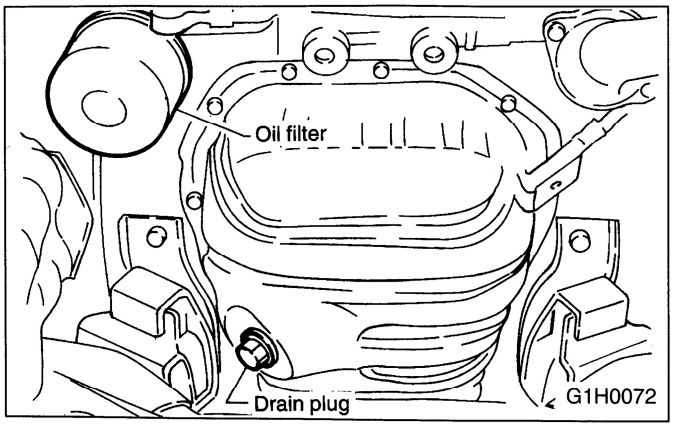

3) Tighten engine oil drain plug after draining engine oil.

Tightening torque:
44 N.m (4.5 kg-m, 33 ft-lb)

GETtheMANUALS.org

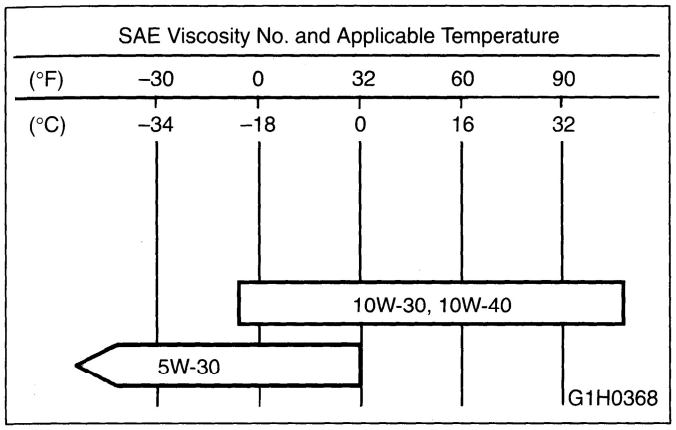

4) Fill engine oil through filler pipe up to upper point on level gauge. Make sure that vehicle is placed level when checking oil level. Use engine oil of proper quality and viscosity, selected in accordance with the table in figure.

Recommended oil
API classification: SH or SG,
CCMC specifiction G4 or G5,
or ILSAC certification mark is displayed on the container
(If it is impossible to get SH or SG grade, you may use SF grade.)

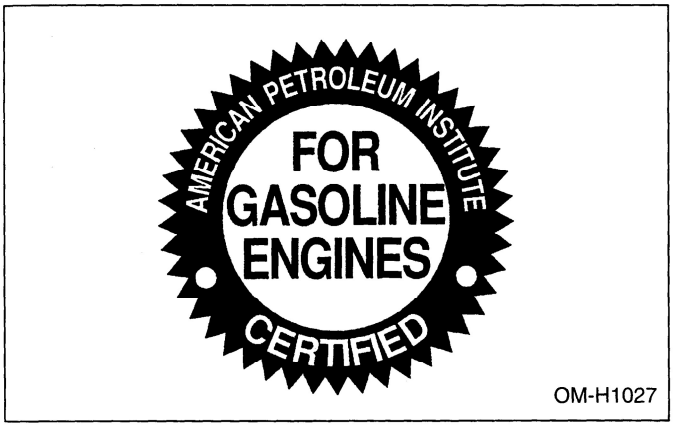

The proper viscosity helps car get good cold and hot starting by reducing viscous friction and thus increasing cranking speed.

CAUTION:
- **When replenishing oil, it does not matter if the oil to be added is a different brand from that in the engine; however, use oil having the API classification and SAE viscosity No. designated by SUBARU.**
- **SAE 5W-30 is not recommended for sustained high speed driving.**

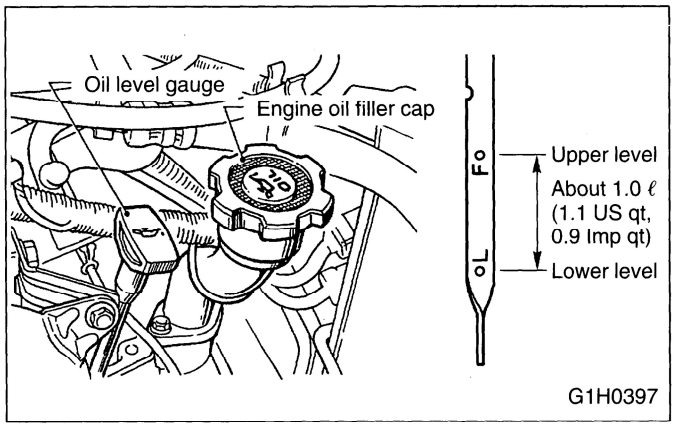

5) Close engine oil filler cap.
6) Start engine and warm it up for a time.
7) After engine stops, recheck the oil level.
If necessary, add engine oil up to upper level on level gauge.

GETtheMANUALS.org

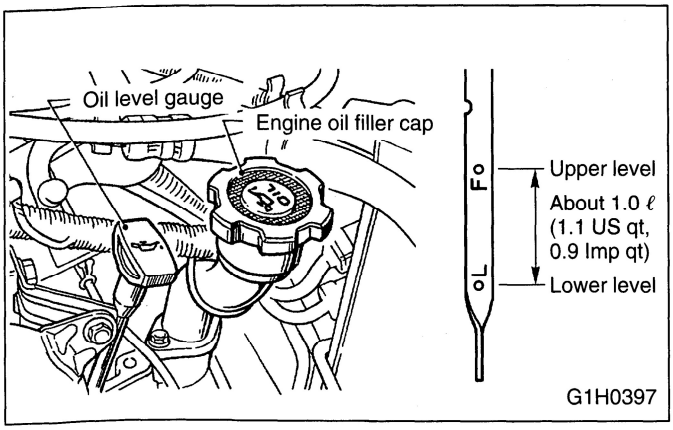

B: INSPECTION

1) Park vehicle on a level surface.
2) Remove oil level gauge and wipe it clean.
3) Reinsert the level gauge all the way. Be sure that the level gauge is correctly inserted and in the proper orientation.
4) Remove it again and note the reading. If the engine oil level is below the "L" line, add oil to bring the level up to the "F" line.
5) After turning off the engine, wait a few minutes for the oil to drain back into the oil pan before checking the level.
6) Just after driving or while the engine is warm, engine oil level may show in the range between the "F" line and the notch mark. This is caused by thermal expansion of the engine oil.
7) To prevent overfilling the engine oil, do not add oil above the "F" line when the engine is cold.

Engine oil capacity (Non-Turbo model):
Upper level
4.0 ℓ (4.2 US qt, 3.5 Imp qt)
Lower level
3.0 ℓ (3.2 US qt, 2.6 Imp qt)
Engine oil capacity (Turbo model):
Upper level
4.5 ℓ (4.8 US qt, 4.0 Imp qt)
Lower level
3.5 ℓ (3.7 US qt, 3.1 Imp qt)

GETtheMANUALS.org

5. Replace Engine Coolant and Inspect Cooling System, Hoses and Connections

MAINTENANCE INTERVAL [Number of months of km (miles) whichever occurs first]					
Months		12	24	36	48
x1,000 km	1.6	25	50	75	100
x1,000 miles	1	15	30	45	60
			P		P

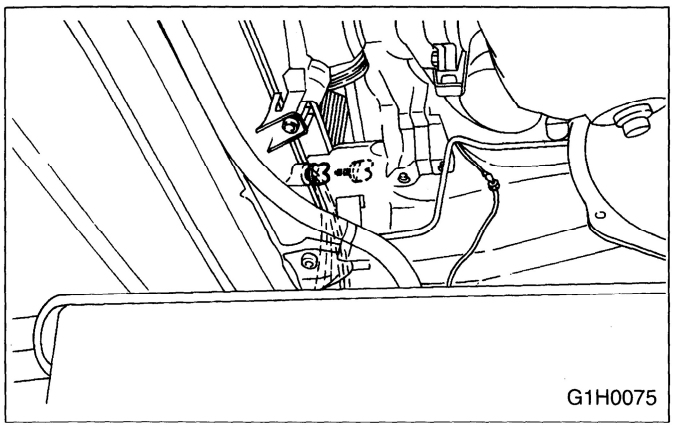
G1H0075

A: REPLACEMENT

1. REPLACEMENT OF COOLANT (NON-TURBO MODEL)

WARNING:
The radiator is of the pressurized type. Do not attempt to open the radiator cap immediately after the engine has been stopped.

1) Place a container under drain tube, and loosen drain plug.
2) Loosen radiator cap to drain coolant.

CAUTION:
Be careful not to spill coolant on the floor.

3) Drain coolant from reserve tank.
4) Tighten radiator drain plug securely after draining coolant. (Drain tube may face downward.)
5) Install reserve tank to original position.
6) Slowly pour prepared coolant from radiator filler port to neck of filler, then pour into reserve tank up to "FULL" level.

Coolant capacity (fill up to "FULL" level)
MT:
Approx. 6.3 ℓ (6.7 US qt, 5.5 Imp qt)
AT:
Approx. 6.2 ℓ (6.6 US qt, 5.5 Imp qt)

CAUTION:
The SUBARU Genuine Coolant containing anti-freeze and anti-rust agents is especially made for SUBARU engine, which has an aluminum crankcase. Always use SUBARU Genuine Coolant, since other coolant may cause corrosion.

GETtheMANUALS.org

7) Securely install radiator cap.
8) Run engine for more than five minutes at 2,000 to 3,000 rpm. (Run engine until radiator becomes hot in order to purge air trapped in cooling system.)
9) Stop engine and wait until coolant temperature lowers. Then open radiator cap to check coolant level and add coolant up to radiator filler neck. Next, add coolant into reserve tank up to "FULL" level.
10) After adding coolant, securely install radiator and reserve tank caps.

2. REPLACEMENT OF COOLANT (TURBO MODEL)

1) Loosen radiator drain plug after following the same procedures 1) as described for the Non-TURBO model.
2) Loosen coolant flow tank cap to drain coolant.
3) Tighten radiator drain plug securely.
4) Slowly pour prepared coolant from coolant flow tank filler port up to the brim of port, and install cap, then pour coolant into reserve tank up to "FULL" level.
5) Run engine for about 15 minutes, not exceeding 2,000 rpm. (Run engine until radiator becomes hot in order to purge air trapped in cooling system.)
6) Stop engine and wait until coolant temperature lowers. [below 50°C (122°F) or 60°C (140°F)] Open coolant flow tank cap and add coolant up to the brim of the port.
7) Wait until coolant temperature lowers further [below 30°C (86°F)], then pour into reserve tank up to the "FULL" level.
8) Run the vehicle until the coolant temperature rises to 80°C (176°F) and check the level in the coolant flow tank, add coolant up to the "FULL" level.

Coolant capacity (fill up to "FULL" level): Approx. 7.2 ℓ (7.6 US qt, 6.3 Imp qt)

CAUTION:
The SUBARU Genuine Coolant containing anti-freeze and anti-rust agents is especially made for SUBARU engine, which has an aluminum crankcase. Always use SUBARU Genuine Coolant, since other coolant may cause corrosion.

GETtheMANUALS.org

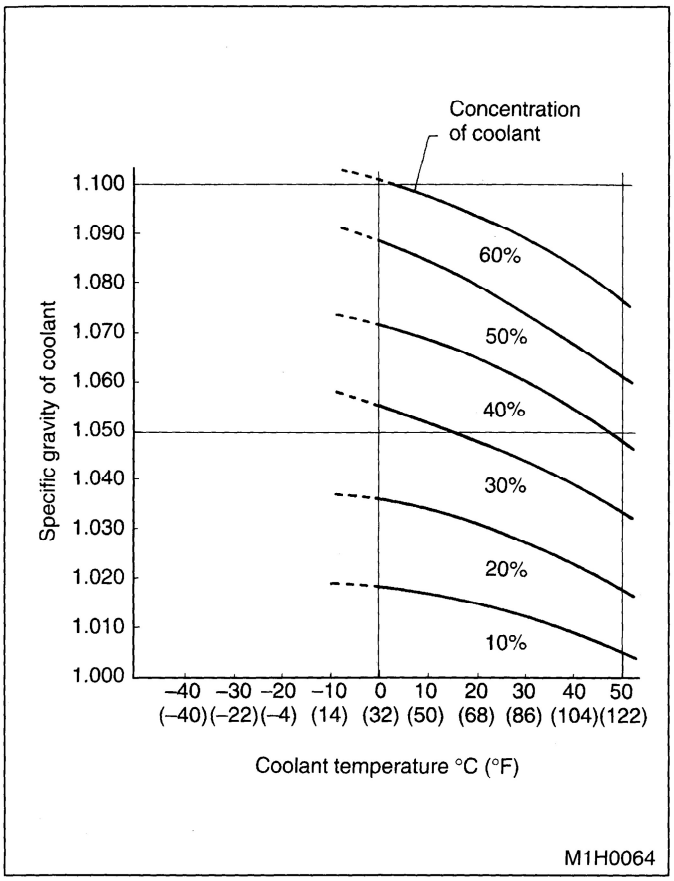

3. RELATIONSHIP OF SUBARU COOLANT CONCENTRATION AND FREEZING TEMPERATURE

The concentration and safe operating temperature of the SUBARU coolant is shown in the diagram. Measuring the temperature and specific gravity of the coolant will provide this information.

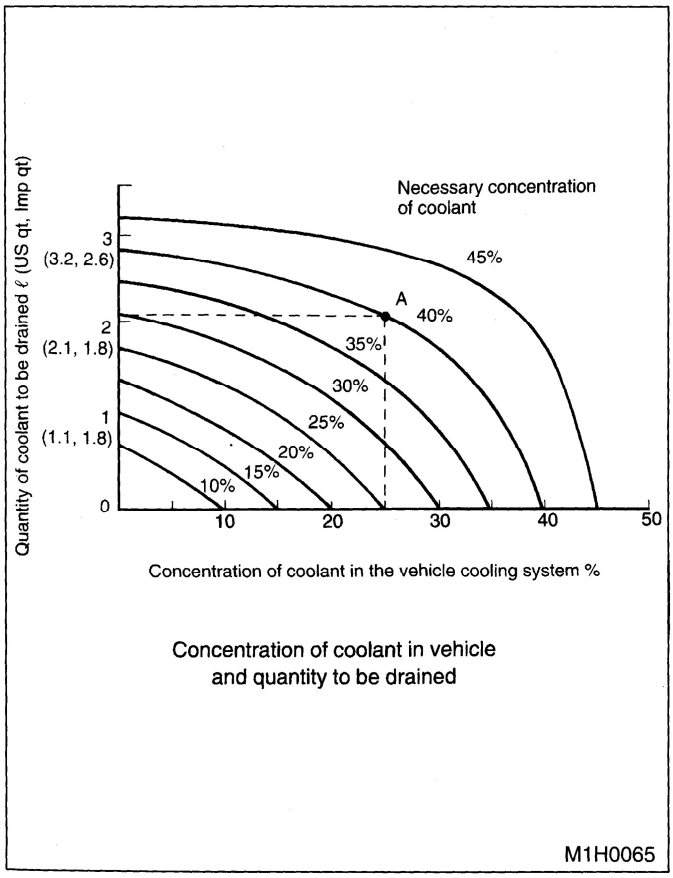

4. PROCEDURE TO ADJUST THE CONCENTRATION OF THE COOLANT

To adjust the concentration of the coolant according to temperature, find the proper fluid concentration in the above diagram and replace the necessary amount of coolant with an undiluted solution of SUBARU genuine coolant (concentration 50).
The amount of coolant that should be replaced can be determined using the diagram.

[Example]
Assume that the coolant concentration must be increased from 25% to 40%. Find point A, where the 25% line of coolant concentration intersects with the 40% curve of the necessary coolant concentration, and read the scale on the vertical axis of the graph at height A. The quantity of coolant to be drained is 2.1 liters (2.2 US qt, 1.8 Imp qt). Drain 2.1 liters (2.2 US qt, 1.8 Imp qt) of coolant from the cooling system and add 2.1 liters (2.2 US qt, 1.8 Imp qt) of the undiluted solution of SUBARU coolant.
If a coolant concentration of 50% is needed, drain all the coolant and refill with the undiluted solution only.

GETtheMANUALS.org

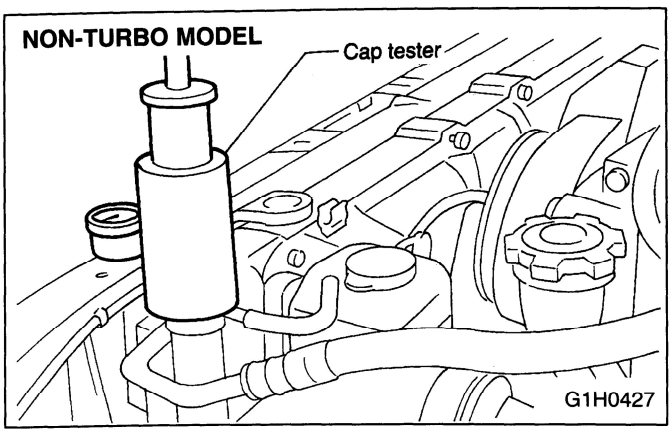

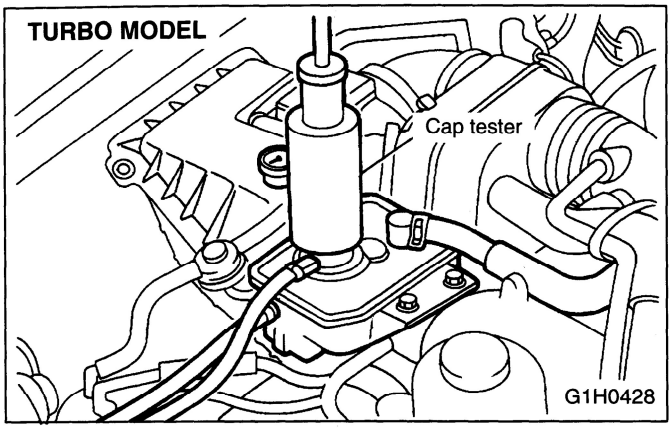

B: INSPECTION

1) Check radiator for leakage, filling it with coolant and attach radiator cap tester to the filler neck. Then apply a pressure of 157 kPa (1.6 kg/cm^2, 23 psi) and check the following points:
- Each portion of radiator for leakage
- Hose joints and other connections for leakage

CAUTION:
When attaching or detaching tester and when operating tester, use special care not to deform radiator filler neck.

NOTE:
- When performing this check, be sure to keep the engine stationary and fill radiator with coolant.
- Wipe off check points before applying pressure.
- Use care not to spill coolant when detaching tester from radiator.

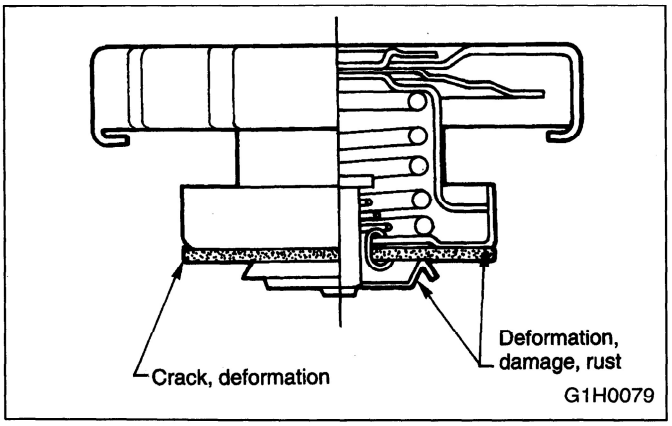

2) Check the radiator cap valve open pressure using radiator cap tester.
Raise the pressure until the needle of gauge stops and see if the pressure can be retained for five to six seconds. The radiator cap is normal if a pressure above the service limit value has been maintained for this period.

Radiator cap valve open pressure
Standard value:
78 — 98 kPa
(0.8 — 1.0 kg/cm^2, 11 — 14 psi)
Service limit: 69 kPa (0.7 kg/cm^2, 10 psi)

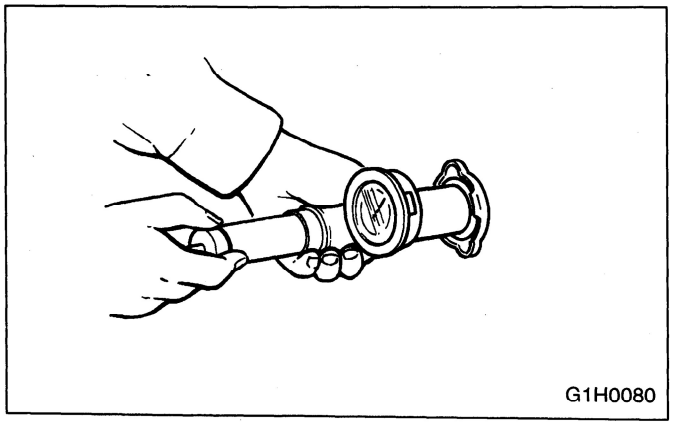

CAUTION:
Rust or dirt on cap may prevent valve from functioning normally: be sure to clean cap before testing.

3) If the coolant temperature exceeds 76.0 to 80.0°C (169 to 176°F) while radiator is not so hot, check thermostat. If thermostat does not open at 76.0 to 80.0°C (169 to 176°F), replace it with a new one.
4) If electric fan does not operate when coolant temperature exceeds 90 to 94°C (194 to 201°F), check thermoswitch or fan motor.

GETtheMANUALS.org

8. Spark Plugs

MAINTENANCE INTERVAL [Number of months of km (miles) whichever occurs first]					
Months		12	24	36	48
x1,000 km	1.6	25	50	75	100
x1,000 miles	1	15	30	45	60
Except Sweden		R	R	R	R
For Sweden	Change every 30,000 km (18,500 miles)				
For Turbo					R

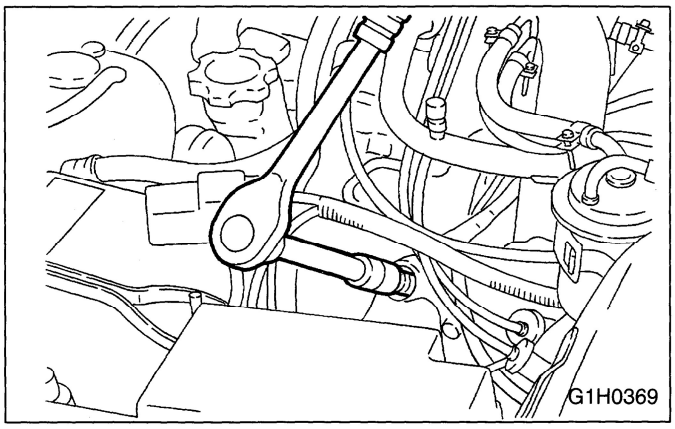

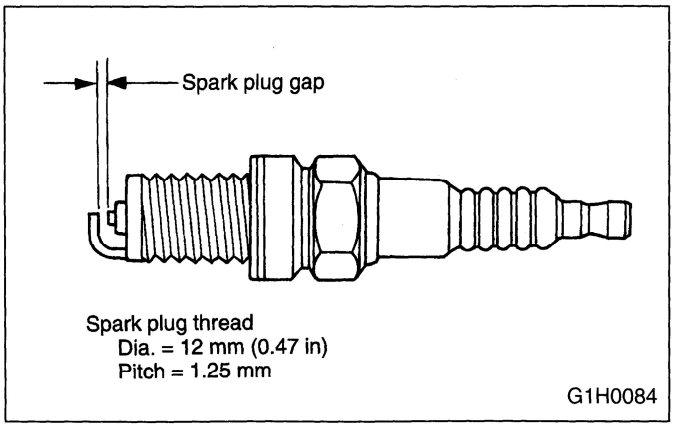

A: REPLACEMENT

1. REPLACEMENT OF SPARK PLUGS (NON-TURBO MODEL)

1) Disconnect spak plug cord.
2) Remove spark plug with a plug-wrench.
3) Set new spark plug.
4) Tighten spark plug lightly with hand, and then secure with a plug-wrench to the specified torque.

Tightening torque:
18 — 24 N.m (1.8 — 2.4 kg-m, 13 — 17 ft-lb)

CAUTION:
Be sure to place the gasket between the cylinder head and spark plug.

NOTE:
If torque wrench is not available, tighten spark plug until gasket contacts cylinder head; then tighten further 1/4 to 1/2 turns.

1800 cc
Recommended spark plug:
NGK BKR6E-11
CHAMPION RC8YC4
Spark plug gap
1.0 — 1.1 mm (0.039 — 0.043 in)

1600 cc
Recommended spark plug:
NGK BKR6E
CHAMPION RC8YC4
Spark plug gap
0.8 mm (0.031 in)

NOTE:
<Ref. to 6-1 [W3A0]>

GETtheMANUALS.org

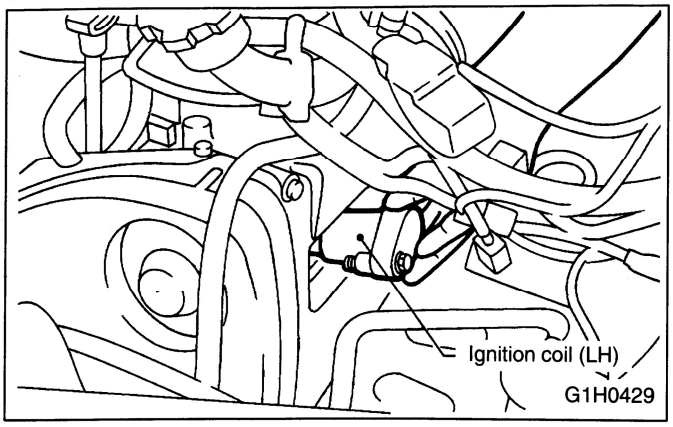

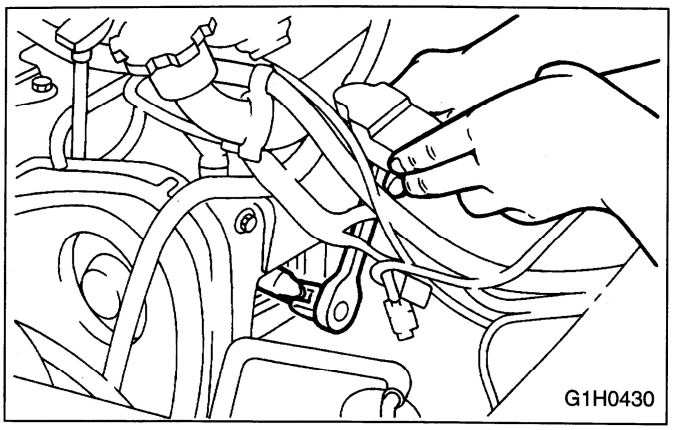

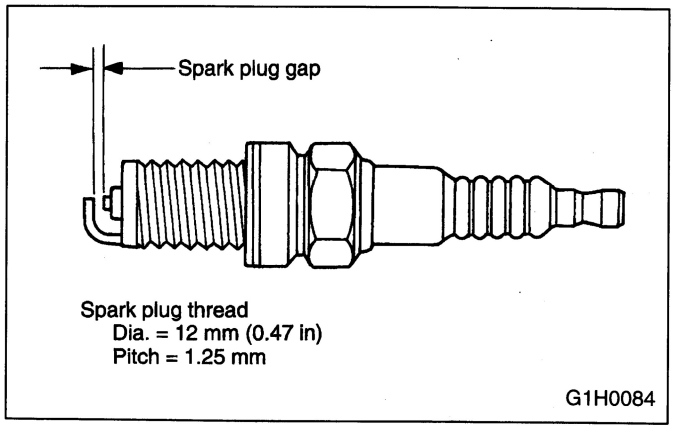

2. REPLACEMENT OF SPARK PLUGS (TURBO MODEL)

1) Removal of ignition coil (RH).
   (1) Dismount accelerator cable from clamps.
   (2) Remove air intake boot and air cleaner case.
   (3) Disconnect ignition coil harness connector.
   (4) Remove ignition coil.
2) Removal of ignition coil (LH).
   (1) Remove battery and window washer tank.
   (2) Disconnect ignition coil harness connector.
   (3) Remove ignition coil.
3) Remove spark plug with a plug-wrench.
4) Set new spark plug.
5) Tighten spark plug lightly with hand, and then secure with a plug-wrench to the specified torque.

Tightening torque:
18 — 24 N.m (1.8 — 2.4 kg-m, 13 — 17 ft-lb)

CAUTION:
Be sure to place the gasket between the cylinder head and spark plug.

NOTE:
If torque wrench is not available, tighten spark plug until gasket contacts cylinder head; then tighten further 1/4 to 1/2 turns.

Recommended spark plug:
NGK PFR6G
Spark plug gap:
0.7 — 0.8 mm (0.028 — 0.031 in)

GETtheMANUALS.org

10. Transmission/Differential (Front and rear) Lubricants (Gear oil)

MAINTENANCE INTERVAL [Number of months of km (miles) whichever occurs first]					
Months		12	24	36	48
x1,000 km	1.6	25	50	75	100
x1,000 miles	1	15	30	45	60
			R		R

A: REPLACEMENT

1. MANUAL TRANSMISSION

1) Drain gear oil by removing drain plug after allowing the engine to cool for 3 to 4 hours.

CAUTION:
Before starting work, cool off the engine well.

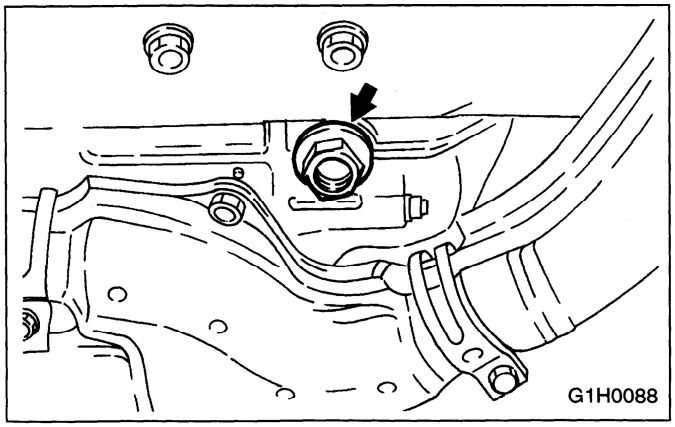

2) Reinstall drain plug after draining gear oil and tighten it to the specified torque.

Tightening torque:
41 — 47 N.m (4.2 — 4.8 kg-m, 30 — 35 ft-lb)

CAUTION:
- **Be sure to place a gasket between the transmission case and drain plug.**
- **Replace the gasket with a new one.**

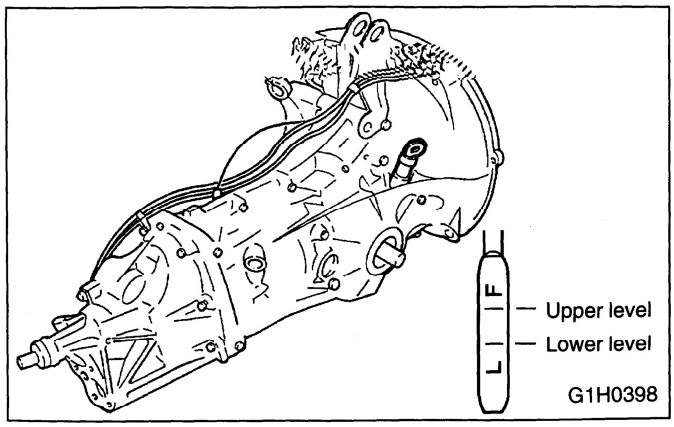

NOTE:
Inspect the transmission gear oil level. If the oil level is at the lower point or below, add some oil through the oil level gauge hole up to the upper point of gauge.

Gear oil capacity:
FWD model: 2.6 ℓ (2.7 US qt, 2.3 Imp qt)
AWD model: 4.0 ℓ (4.2 US qt, 3.5 Imp qt)

GETtheMANUALS.org

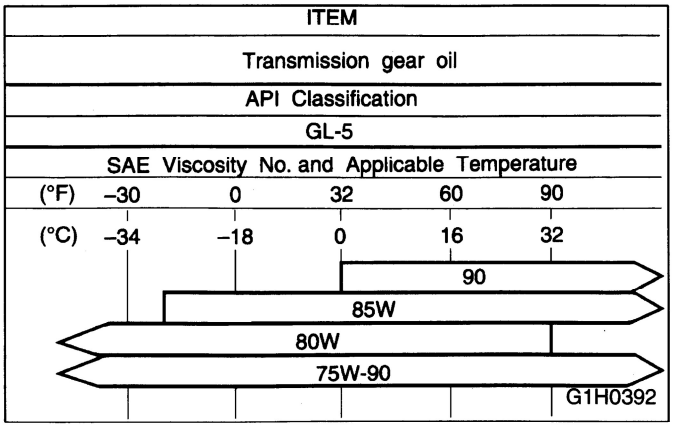

Recommended oil

CAUTION:
Each oil manufacturer has its base oil and additives. Thus, do not mix two or more brands.

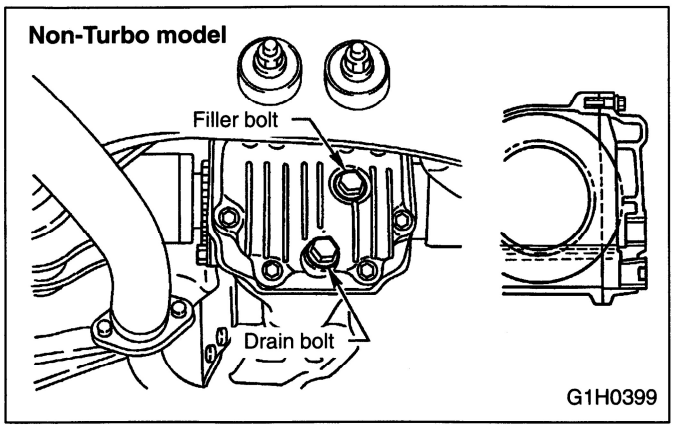

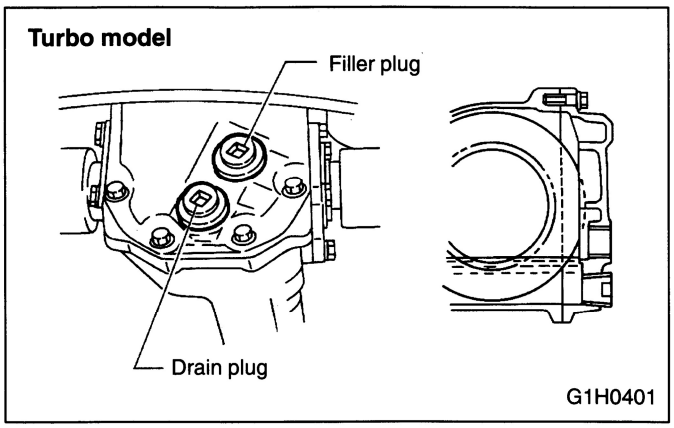

3. REAR DIFFERENTIAL (AWD MODEL)

1) Drain oil by removing drain bolt or plug.
2) Remove filler bolt or plug for quick draining oil.
3) Tighten drain bolt or plug after draining oil.

CAUTION:
- **Non-Turbo model**

Always use a new aluminum gasket.

Tightening torque:
34 ± 4 N.m (3.5 ± 0.4 kg-m, 25.3 ± 2.9 ft-lb)

- **Turbo model**

Apply fluid packing to drain plug threads before installation.

Fluid packing:
Three Bond 1205 or equivalent
Tightening torque:
49 ± 9.8 N.m (5 ± 1 kg-m, 36 ± 7.2 ft-lb)

4) After installing drain bolt or plug onto rear differential gear case firmly, fill oil up fully to the mouth of filler bolt or plug.

Oil capacity:
0.8 ℓ (0.8 US qt, 0.7 Imp qt)

5) Install filler bolt or plug onto rear differential gear case firmly.

CAUTION:
- **Non-Turbo model**

Always use a new aluminum gasket.

Tightening torque:
34 ± 4 N.m (3.5 ± 0.4 kg-m, 25.3 ± 2.9 ft-lb)

- **Turbo model**

Apply fluid packing to filler plug threads before installation.

GETtheMANUALS.org

Fluid packing:
Three Bond 1205 or equivalent
Tightening torque:
49 ± 9.8 N.m (5 ± 1 kg-m, 36 ± 7.2 ft-lb)

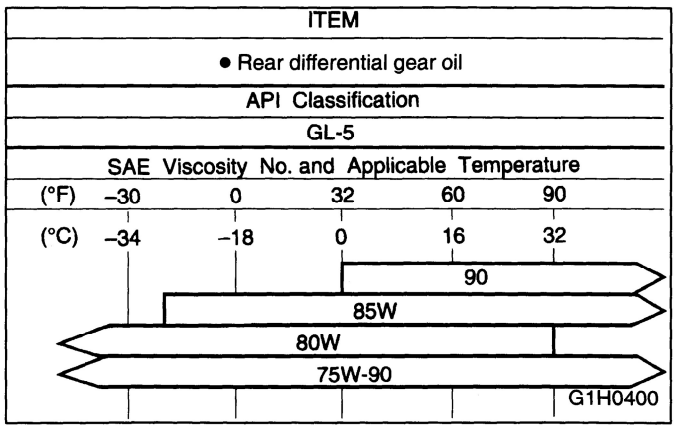

Recommended oil

CAUTION:
Each oil manufacturer has its base oil and additives. Thus, do not mix two or more brands.

GETtheMANUALS.org

13. Disc Brake Pads and Discs/Front and Rear Axle Boots and Axle Shaft Joint Portions

MAINTENANCE INTERVAL [Number of months of km (miles) whichever occurs first]					
Months		12	24	36	48
x1,000 km	1.6	25	50	75	100
x1,000 miles	1	15	30	45	60
		I	I	I	I

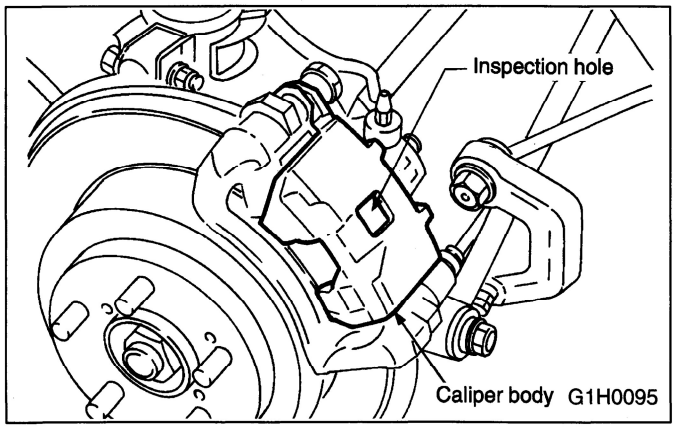

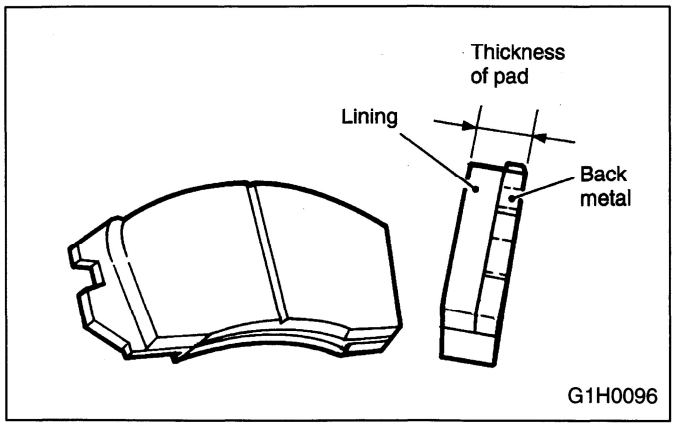

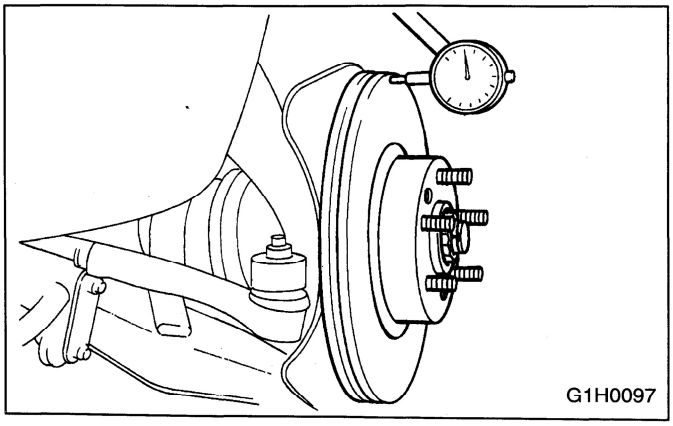

A: INSPECTION

1. DISC BRAKE PAD AND DISC

1) Jack up vehicle and support with rigid racks. Then remove wheels.
2) Visually check pad thickness through inspection hole of disc brake assembly. Replace pad if necessary.

Pad thickness including back metal mm (in)		
	Front	Rear
Standard	17 (0.67)	15 (0.59)
Service limit	7.5 (0.295)	6.5 (0.256)
Service limit (exclude back metal)	1.5 (0.059)	1.5 (0.059)

3) Check the disc rotor, and correct or replace if it is damaged or worn.

Brake disc thickness mm (in)			
	Front		Rear
	15" & 14"	13"	
Standard	24 (0.94)	18 (0.71)	10 (0.39)
Wear limit	22 (0.87)	16 (0.63)	8.5 (0.335)

Measure the disc rotor runout at a point less than 5 mm (0.20 in) from the outer periphery of the rotor.

Disc rotor runout limit:
Front: 0.075 mm (0.00295 in)
Rear: 0.100 mm (0.00394 in)

CAUTION:
When replacing a pad, always replace the pads for both the left and right wheels at the same time. Also replace pad clips if they are twisted or worn.

GETtheMANUALS.org

16. Clutch Operation System

MAINTENANCE INTERVAL [Number of months of km (miles) whichever occurs first]					
Months		12	24	36	48
x1,000 km	1.6	25	50	75	100
x1,000 miles	1	15	30	45	60
		I	I	I	I

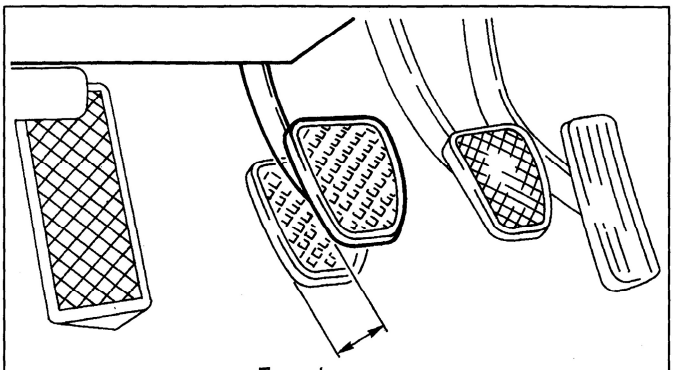

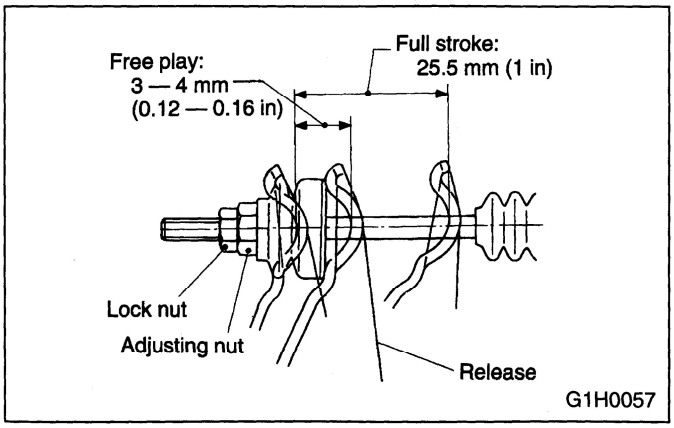

A: INSPECTION AND ADJUSTMENT

1. MECHANICAL APPLICATION TYPE

1) Inspect free play of clutch pedal by operating pedal by hand.
If it is out of the specified value, adjust it by turning wing nut on engine side of clutch cable at release fork.

Tightening torque
(Adjusting nut on release fork):
6 ± 1.5 N.m
(0.61 ± 0.15 kg-m, 4.4 ± 1.1 ft-lb)

Standard free play:
At clutch pedal
10 — 20 mm (0.39 — 0.79 in)

Fork lever free play allowance:
3 — 4 mm (0.12 — 0.16 in)

NOTE:
When replacing clutch cable with new one and/or marking free play adjustment of clutch pedal, make adjustment of hill-holder system without fail as follows.
After replacing clutch cable [and/or pressure hold valve (PHV) cable] with a new one, depress clutch pedal about thirty (30) times as a running-in operation prior to this adjustment.

2) Pedal-to-floor plate gap in disengaged position
(1) With the engine idling, pull parking brake lever completely.
(2) Slowly depress clutch pedal while moving shift lever into reverse.
(3) Stop depressing clutch pedal when gearshifting is complete. With clutch pedal in this position, measure the distance between the upper side of pedal pad and the

GETtheMANUALS.org

lower end of front panel (intersection of front panel with floor). Check that the measured value is within the specified standard.

Standard:
80 mm (3.15 in) or more

3) Pedal height
Check that the clutch pedal pad surface is level with or higher than brake pedal pad surface.

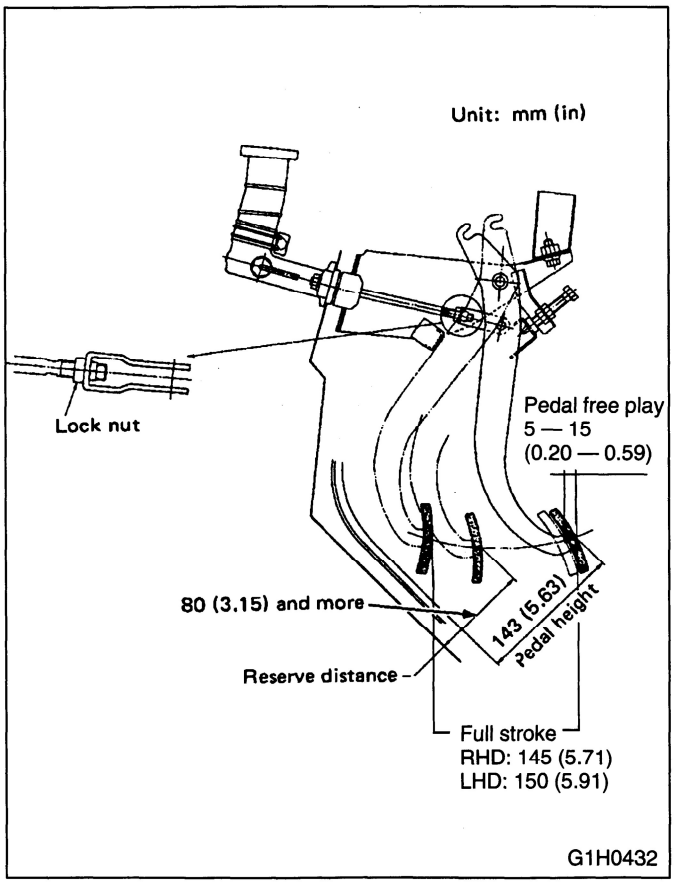

3. HYDRAULIC APPLICATION TYPE

1) Inspect free play of clutch pedal by operating pedal by hand.
If it is out of the specified value, loosen lock nut for push rod and adjust push rod by turning in the direction that shortens or lengthens it.

Standard free play:
5 — 15 mm (0.2 — 0.59 in)
Tightening torque (Adjusting lock nut):
10 ± 1 N-m
(1.0 ± 0.1 kg-m, 7.25 ± 0.75 ft-lb)

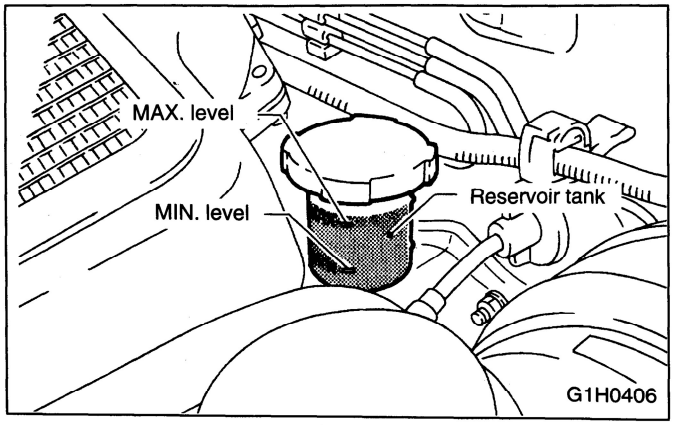

2) Check the fluid level using the scale on the outside of the clutch master cylinder tank. If the level is below "MIN", add clutch fluid to bring it up to "MAX".

Recommended clutch fluid:
FMVSS No. 116, fresh DOT3 or DOT4 brake fluid

CAUTION
- **Avoid mixing different brakes of brake fluid to prevent degradation of the fluid.**
- **Be careful not to allow dirt or dust to get into the reservoir tank.**
- **Use fresh DOT3 or DOT4 brake fluid when refilling fluid.**

GETtheMANUALS.org

17. Steering and Suspension System

MAINTENANCE INTERVAL [Number of months of km (miles) whichever occurs first]					
Months		12	24	36	48
x1,000 km	1.6	25	50	75	100
x1,000 miles	1	15	30	45	60
		I	I	I	I

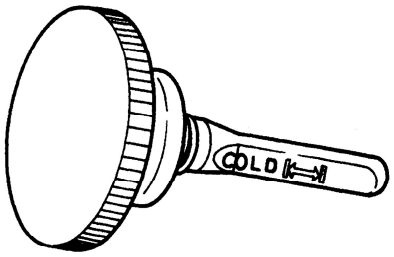

G1H0112

A: INSPECTION

5. POWER STEERING FLUID LEVEL

1) Place vehicle with engine "off" on the flat and level surface.
2) Check the fluid level by removing filler cap of oil pump.
   (1) Check at temperature 21°C (70°F) of fluid temperature.

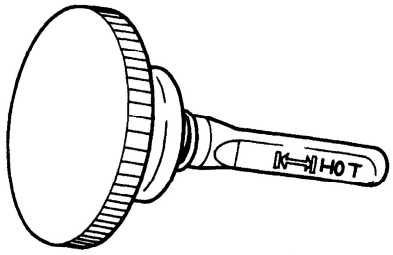

G1H0113

   (2) Check at temperature 60°C (140°F) of fluid temperature.

3) Fluid level should be maintained in the each specified range on the indicator of filler cap.
If fluid level is at lower point or below, add fluid to keep the level in the specified range of indicator.
If fluid level is at upper point or above, drain fluid to keep the level in the specified range of indicator by using a syringe or the like.

GETtheMANUALS.org

Recommended fluid	Manufacturer
"Dexron II or IIE" type automatic transmission fluid	B.P.
	CALTEX
	CASTROL
	MOBIL
	SHELL
	TEXACO

Fluid capacity:
0.7 ℓ (0.7 US qt, 0.6 Imp qt)

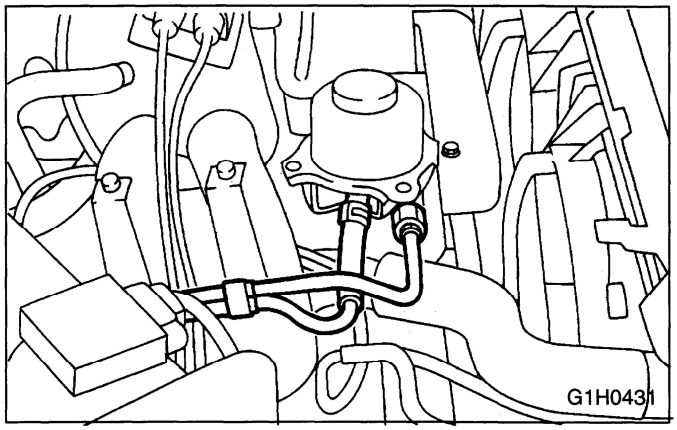

7. HOSES OF OIL PUMP FOR DAMAGES

Check pressure hose and return hose of oil pump for crack, swell or damage. Replace hose with new one if necessary.

NOTE:
Prevent hoses from revolving and/or turning when installing hoses.

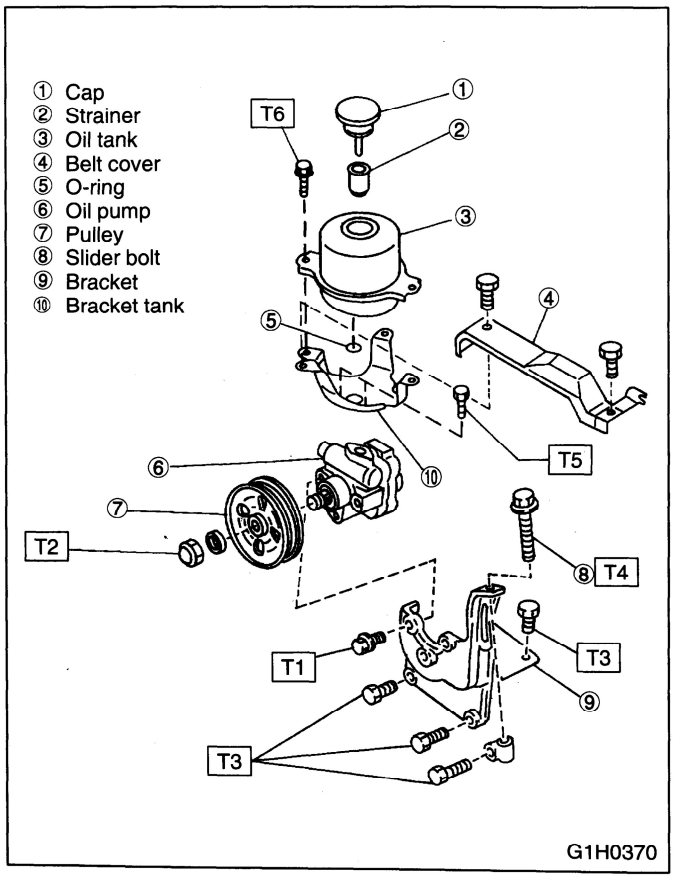

10. FITTING BOLTS AND NUTS

Inspect fitting bolts and nuts of oil pump and bracket for looseness, and retighten them if necessary.
Inspect and/or retighten them when engine is cold.

Tightening torque:
T1: 20.5 ± 2.5 N.m
(2.05 ± 0.25 kg-m, 15 ± 2 ft-lb)
T2: 52 ± 10 N.m
(5.3 ± 1.0 kg-m, 38.5 ± 7.5 ft-lb)
T3: 22 ± 2 N.m
(2.2 ± 0.2 kg-m, 15.5 ± 1.5 ft-lb)
T4: 8 ± 2 N.m
(0.8 ± 0.2 kg-m, 5.5 ± 1.5 ft-lb)
T5: 18^{+5}_{0} N.m
($1.8^{+0.5}_{0}$ kg-m, $13.0^{+3.6}_{0}$ ft-lb)
T6: 7.4 ± 2.0 N.m
(0.75 ± 0.20 kg-m, 5.4 ± 1.4 ft-lb)

GETtheMANUALS.org

SPECIAL TOOLS 1-6

		Page
1.	Engine Tools	2
2.	Manual Transmission and Differential Tools	
3.	Automatic Transmission and Differential Tools	
4.	Rear Differential Tools (AWD Models)	4
5.	Suspension Tools	
6.	Wheels and Axles Tools	8
7.	Steering System Tools	
8.	Brake Tools	
9.	Body Tools	
10.	Supplemental Restraint System Tools	10
11.	Select Monitor and Cartridge	11

GETtheMANUALS.org

1. Engine Tools

498267600 *	498457000	498457100	498497100
CYLINDER HEAD TABLE	ENGINE STAND ADAPTER RH	ENGINE STAND ADAPTER LH	CRANKSHAFT STOPPER
• For replacing valve guides. Used to remove and install valve springs. • For DOHC engine.	Used with ENGINE STAND (499817000).	Used with ENGINE STAND (499817000).	Used to stop rotation of flywheel when loosening and tightening crankshaft pulley bolt, etc.
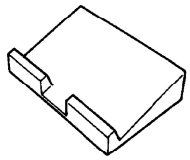 G1H0371	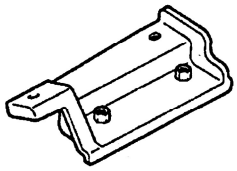 G1H0128	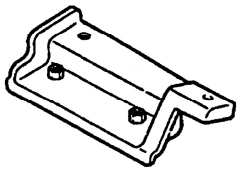 G1H0129	G1H0130
498547000	398744300	498857100	499017100
OIL FILTER WRENCH	PISTON GUIDE	VALVE OIL SEAL GUIDE	PISTON PIN GUIDE
Used to remove and install oil filter.	• Used to install piston in cylinder. • For DOHC engine.	For press-fitting of intake and exhaust valve guide oil seals.	Used to install piston pin, piston and connecting rod.
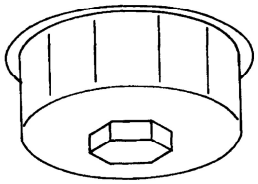 G1H0131	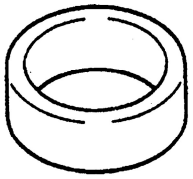 G1H0132	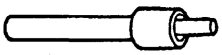 G1H0133	G1H0134
499037100	499097500	499207100	499587100
CONNECTING ROD BUSHING REMOVER & INSTALLER	PISTON PIN REMOVER ASSY	CAMSHAFT SPROCKET WRENCH CP	CAMSHAFT OIL SEAL INSTALLER
Used to remove and install connecting rod bushing.	Used to remove piston pin.	Used to remove and install camshaft sprocket.	• Used to install crankshaft oil seal. • Used with CAMSHAFT OIL SEAL GUIDE (499597000).
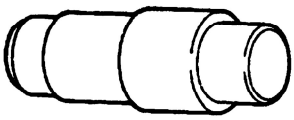 G1H0135	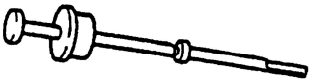 G1H0136	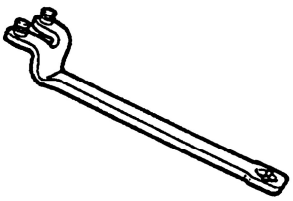 G1H0137	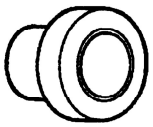 G1H0138

*Newly adopted tool

GETtheMANUALS.org

499587200	499597000	499597100	499718000
CRANKSHAFT OIL SEAL INSTALLER	CAMSHAFT OIL SEAL GUIDE	CRANKSHAFT OIL SEAL GUIDE	VALVE SPRING REMOVER
• Used to install crankshaft oil seal. • Used with CRANKSHAFT OIL SEAL GUIDE (499597100).	• Used to install camshaft oil seal. • Used with CAMSHAFT OIL SEAL INSTALLER (499587100).	• Used to install crankshaft oil seal. • Used with CRANKSHAFT OIL SEAL INSTALLER (499587200).	Used to remove and install valve spring.
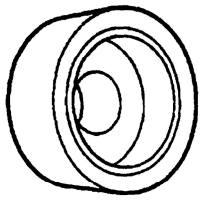 G1H0139	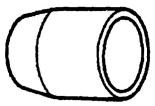 G1H0140	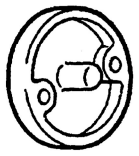 G1H0141	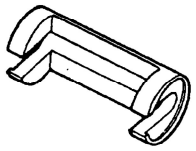 G1H0142
498267700 *	499767200	499767400	499817000
VALVE GUIDE ADJUSTER	VALVE GUIDE REMOVER	VALVE GUIDE REAMER	ENGINE STAND
• Used to install intake and exhaust valve guides. • For DOHC engine.	For removing valve guides.	For reaming valve guides.	• Stand used for engine disassembly and ASSY. • Used with ENGINE STAND ADAPTER RH (498457000) & LH (498457100).
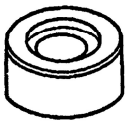 G1H0143	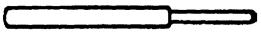 G1H0144	G1H0145	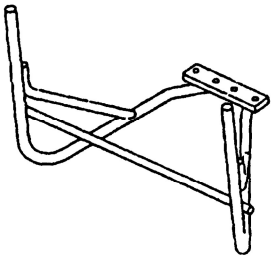 G1H0146
499977000	499987500		
CRANK PULLEY WRENCH CP	CRANKSHAFT SOCKET		
Used to stop rotation of crankshaft pulley when loosening and tightening crankshaft pulley bolts.	Used to rotate crankshaft.		
G1H0147	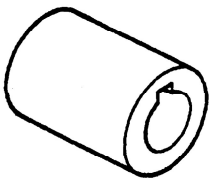 G1H0148		

*Newly adopted tool

GETtheMANUALS.org

4. Rear Differential Tools (AWD Models)

398477701	398477702	498175500	398217700
HANDLE	DRIFT	INSTALLER	ATTACHMENT SET
Front and rear bearing race.	Rear bearing race.	Rear bearing cone.	Differential ASSY.
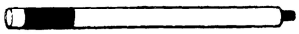 G1H0215	G1H0227	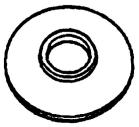 G1H0217	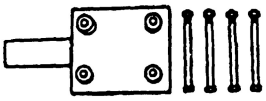 G1H0218
399780111	498447120	498427200	498447100
WRENCH ASSY	DRIFT	FLANGE WRENCH	DRIFT
Used to remove and install side oil seal holder.	Oil seal.	Companion flange.	Oil seal.
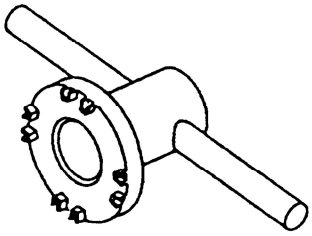 G1H0169	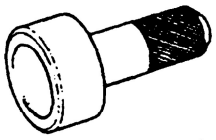 G1H0221	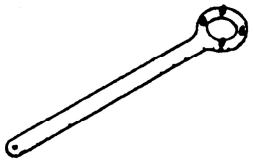 G1H0222	G1H0200
399520105	398467700	498485400	498505501
SEAT	DRIFT	DRIFT	GAUGE
Side bearing cone.	Drive pinion, Pilot bearing, Front bearing cone.	Side bearing cone.	Pinion height adjustment.
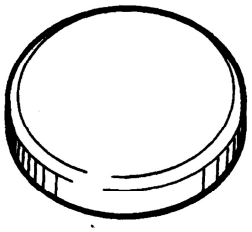 G1H0305	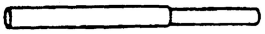 G1H0224	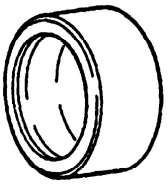 G1H0225	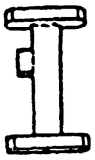 G1H0226

GETtheMANUALS.org

498447110	498447140	32285AA000	499705404
BEARING OUTER RACE DRIFT	DUMMY SHAFT	DUMMY COLLAR	SEAT
For press-fitting the bearing race (front) of differential carrier.	Pinion height and Preload adjustment.	Pinion height and Preload adjustment.	Side bearing cup.
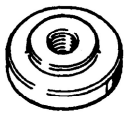 G1H0227	G1H0228	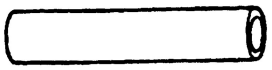 G1H0229	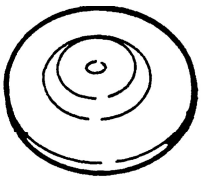 G1H0304
499705401	399780104	899580100	899874100
PULLEY ASSY	WEIGHT	INSTALLER	INSTALLER
Oil seal, Side bearing cup.	Front bearing cone, Pilot bearing, Companion flange.	Front bearing cone, Pilot bearing.	Companion flange.
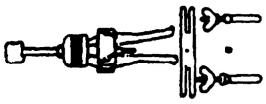 G1H0232	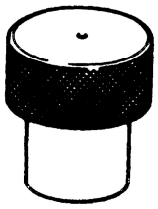 G1H0234	G1H0235	G1H0236
899904100	498247001	498247100	398177700
STRAIGHT PIN REMOVER	MAGNET BASE	DIAL GAUGE	INSTALLER
Differential pinion shaft lock pin.	• Used to measure backlash between side gear and pinion, and hypoid gear. • Used with DIAL GAUGE (498247100).	• Used to measure backlash between side gear and pinion, and hypoid gear. • Used with MAGNET BASE (498247001).	Rear bearing cone.
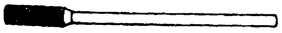 G1H0237	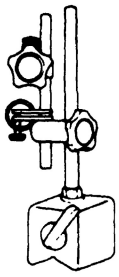 G1H0159	G1H0160	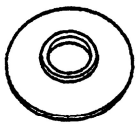 G1H0355

GETtheMANUALS.org

498517210*	498485400	498515500	398457700
REPLACER	SIDE BEARING DRIFT	DRIVE PINION BEARING REPLACER	ATTACHMENT
Side bearing cone.	For press-fitting the side bearing cone of differential.	For removing the drive pinion bearing cone (front).	• Side bearing retainer. • For TURBO model
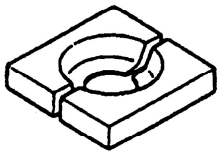 G1H0379	G1H0357	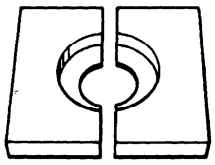 G1H0358	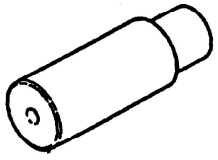 G1H0386
398237700	398417700	398427703	398437700
GAUGE	DRIFT	DRIFT 2	DRIFT
• Side bearing. • For TURBO model	• Oil seal. • For TURBO model	• For press-fitting the bearing race (front) of differential carrier. • For TURBO model	• Oil seal. • For TURBO model
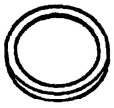 G1H0372	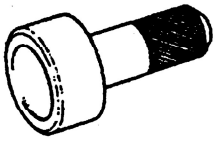 G1H0373	G1H0356	G1H0375
398507702	398507703	398507704	398517700
DUMMY SHAFT	DUMMY COLLAR	BLOCK	REPLACER
• Pinion height and Preload adjustment. • For TURBO model	• Pinion height and Preload adjustment. • For TURBO model	• Pinion height and Preload adjustment. • For TURBO model	• Rear bearing cone. • For TURBO model
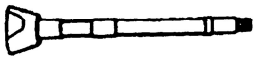 G1H0376	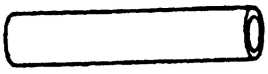 G1H0377	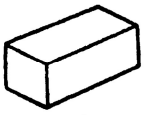 G1H0378	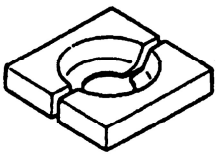 G1H0379

*Newly adopted tool

GETtheMANUALS.org

398487700	398507701	398527700	498517200 *
DRIFT	GAUGE	PULLEY ASSY	REPLACER
• Side bearing cone. • For TURBO model	• Pinion height adjustment. • For TURBO model	• Oil seal, Side bearing cup. • For TURBO model	• Side bearing cone. • For TURBO model
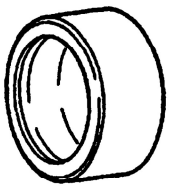 G1H0380	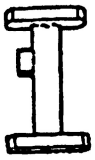 G1H0381	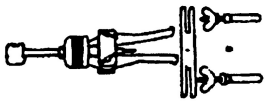 G1H0382	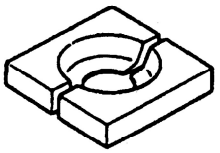 G1H0379

398227700
WEIGHT
• Side bearing. • For TURBO model
G1H0385

*Newly adopted tool

GETtheMANUALS.org

6. Wheels and Axles Tools

922431000	925091000	926470000	927060000
AXLE SHAFT INSTALLER	BAND TIGHTENING TOOL	AXLE SHAFT PULLER	HUB REMOVER
• Used to install axle shaft into housing • Used with ADAPTER (927390000).	For tightening boot band.	Used to remove front axle shaft.	Used to remove front hub.
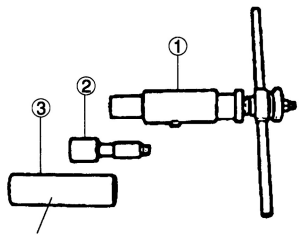 EXTENSION AXLE SHAFT INSTALLER G1H0247	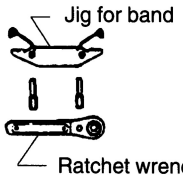 G1H0248	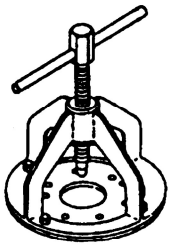 G1H0249	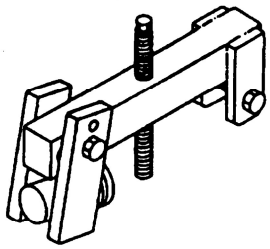 G1H0250
927080000	927100000	927140000	927390000
HUB STAND	BEARING PULLER	AXLE SHAFT PULLER PLATE	ADAPTER
Used to disassemble and assemble hub bolt in rear hub CP. FWD	• Used to disassemble and assemble front housing bearing. • Used with HOUSING STAND (927400000).	Same as plate 2 included in AXLE SHAFT PULLER (927070000).	Used as an adapter for AXLE SHAFT INSTALLER (922431000).
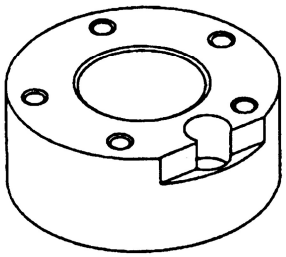 G1H0251	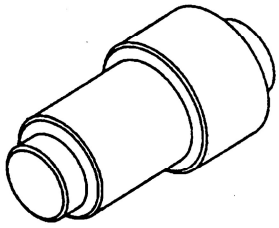 G1H0252	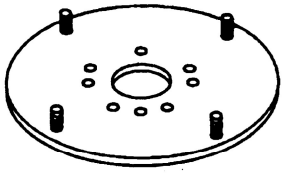 G1H0253	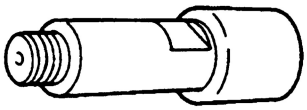 G1H0254
927400000	927410000	927420000	927430000
HOUSING STAND	OIL SEAL INSTALLER	HUB REMOVER	HOUSING STAND
• Used to disassemble and assemble front housing bearing. • Used with BEARING PULLER (927100000).	Used to install oil seal into front housing.	Used to remove rear hub CP.	• Used to disassemble and assemble rear housing bearing. • Used with BEARING PULLER (927440000).
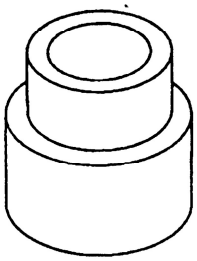 G1H0255	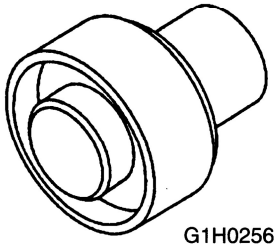 G1H0256	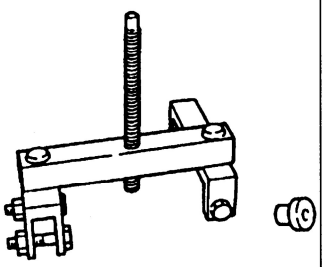 G1H0257	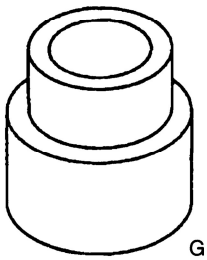 G1H0255

GETtheMANUALS.org

927440000	927120000	927450000	927460000
BEARING REMOVER	HUB INSTALLER	HUB INSTALLER	OIL SEAL INSTALLER
• Used to disassemble and assemble rear housing bearing. • Used with HOUSING STAND (927430000).	Used to install hub.	• Used to press rear hub CP into housing ASSY. • Used with HOUSING STAND (927430000).	• Used to install outer bearing and sub bearing into housing. • Used with HOUSING STAND (927430000).
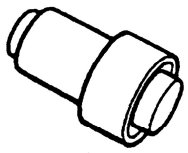 G1H0258	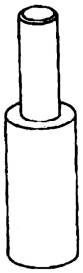 G1H0301	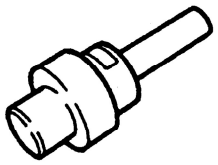 G1H0259	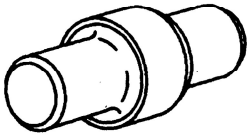 G1H0260

28099PA090	28099PA100
OIL SEAL PROTECTOR	DRIVE SHAFT REMOVER
• Used to install rear drive shaft into rear differential. • For protecting oil seal.	• Used to remove rear drive shaft from rear differential.
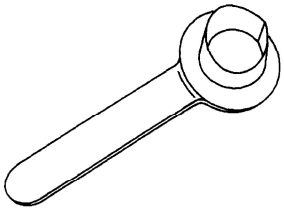 G1H0303	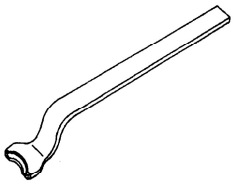 G1H0388

GETtheMANUALS.org

10. Supplemental Restraint System Tools

98299PA000	98299PA011	98299PA020	98299PA030
HARNESS A	HARNESS B2	HARNESS C	DEPLOYMENT TOOL
Used to check the supplemental restraint system.	Used to check the supplemental restraint system.	Used to check the supplemental restraint system.	Used to operate the supplemental restraint system when scraping the vehicle.
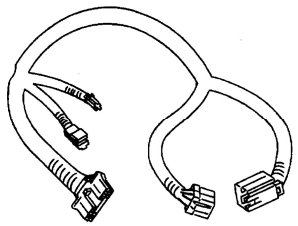 G1H0284	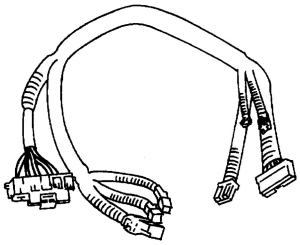 G1H0285	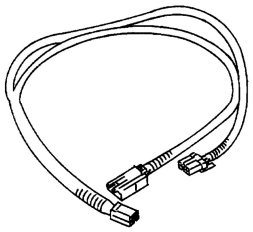 G1H0286	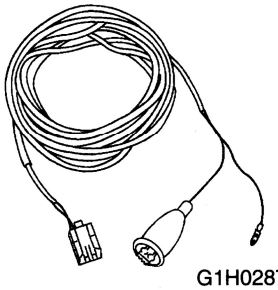 G1H0287

98299PA040
AIR BAG RESISTOR
Used to check the steering column harness.
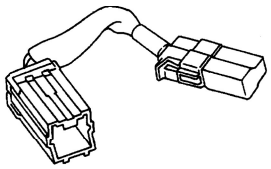 G1H0389

GETtheMANUALS.org

11. Select Monitor and Cartridge

498349900 *	498307500
CARTRIDGE	SELECT MONITOR KIT
Troubleshooting for electrical systems.	Troubleshooting for electrical systems.
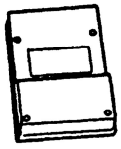 G1H0288	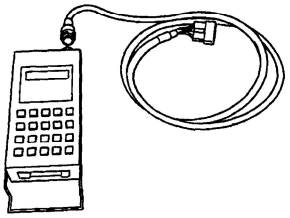 G1H0127

*Newly adopted tool

GETtheMANUALS.org