2004 Chevrolet SSR Owner Manual

Seats and Restraint Systems 1-1
Front Seats 1-2
Safety Belts 1-6
Child Restraints 1-21
Air Bag Systems 1-42
Restraint System Check 1-55

Features and Controls 2-1
Keys 2-2
Doors and Locks 2-6
Windows 2-9
Theft-Deterrent Systems 2-11
Starting and Operating Your Vehicle 2-13
Mirrors 2-23
HomeLink® Transmitter 2-26
Storage Areas 2-30
Convertible Top 2-45
Vehicle Personalization 2-52

Instrument Panel 3-1
Instrument Panel Overview 3-2
Climate Controls 3-19
Warning Lights, Gages, and Indicators 3-23
Driver Information Center (DIC) 3-44
Audio System(s) 3-61

Driving Your Vehicle 4-1
Your Driving, the Road, and Your Vehicle 4-2
Towing 4-32

Service and Appearance Care 5-1
Service 5-3
Fuel 5-4
Checking Things Under the Hood 5-10
Rear Axle 5-43
Headlamp Aiming 5-43
Bulb Replacement 5-43
Windshield Wiper Blade Replacement 5-49
Tires 5-51
Appearance Care 5-74
Vehicle Identification 5-82
Electrical System 5-83
Capacities and Specifications 5-92

Maintenance Schedule 6-1
Maintenance Schedule 6-2

Customer Assistance and Information 7-1
Customer Assistance and Information 7-2
Reporting Safety Defects 7-12

Index 1

GENERAL MOTORS, GM, the GM Emblem, CHEVROLET, the CHEVROLET Emblem are registered trademarks and the name SSR is a trademark of General Motors Corporation.

This manual includes the latest information at the time it was printed. We reserve the right to make changes after that time without further notice. For vehicles first sold in Canada, substitute the name “General Motors of Canada Limited” for Chevrolet Motor Division whenever it appears in this manual.

Please keep this manual in your vehicle, so it will be there if you ever need it when you’re on the road. If you sell the vehicle, please leave this manual in it so the new owner can use it.

Canadian Owners

A French language copy of this manual can be obtained from your dealer or from:

Helm, Incorporated
P.O. Box 07130
Detroit, MI 48207

How to Use This Manual

Many people read the owner manual from beginning to end when they first receive their new vehicle. If you do this, it can help you learn about the features and controls for the vehicle. Pictures and words work together in the owner manual to explain things.

Index

A good place to look for what you need is the Index in back of the manual. It is an alphabetical list of what is in the manual, and the page number where you will find it.

Litho in U.S.A.
Part No. C2439 A First Edition

©Copyright General Motors Corporation 11/07/03
All Rights Reserved

Safety Warnings and Symbols

You will find a number of safety cautions in this book. We use a box and the word CAUTION to tell you about things that could hurt you if you were to ignore the warning.

⚠ CAUTION:

These mean there is something that could hurt you or other people.

In the caution area, we tell you what the hazard is. Then we tell you what to do to help avoid or reduce the hazard. Please read these cautions. If you don't, you or others could be hurt.

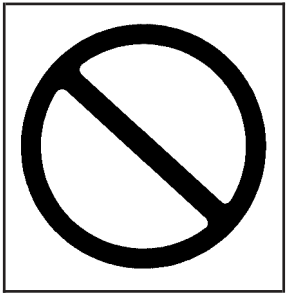

You will also find a circle with a slash through it in this book. This safety symbol means "Don't," "Don't do this" or "Don't let this happen."

Vehicle Damage Warnings

Also, in this manual you will find these notices:

Notice: **These mean there is something that could damage your vehicle.**

A notice tells about something that can damage your vehicle. Many times, this damage would not be covered by your vehicle's warranty, and it could be costly. But the notice will tell you what to do to help avoid the damage.

When you read other manuals, you might see CAUTION and NOTICE warnings in different colors or in different words.

There are also warning labels on your vehicle. They use the same words, CAUTION or NOTICE.

Vehicle Symbols

The vehicle has components and labels that use symbols instead of text. Symbols are shown along with the text describing the operation or information relating to a specific component, control, message, gage, or indicator.

If you need help figuring out a specific name of a component, gage, or indicator, reference the following topics:

- Seats and Restraint Systems in Section 1
- Features and Controls in Section 2
- Instrument Panel Overview in Section 3
- Climate Controls in Section 3
- Warning Lights, Gages, and Indicators in Section 3
- Audio System(s) in Section 3
- Engine Compartment Overview in Section 5

These are some examples of symbols that may be found on the vehicle:

CAUTION POSSIBLE INJURY	LATCH BOTH LAP AND SHOULDER BELTS TO PROTECT OCCUPANT DO NOT TWIST SAFETY BELT WHEN ATTACHING		MASTER LIGHTING SWITCH	ENGINE COOLANT TEMP	FUSE BOX ACCESS
PROTECT EYES BY SHIELDING	FASTEN SEAT BELTS	AIR BAG	TURN SIGNALS	BATTERY CHARGING SYSTEM	ENGINE COOLANT FAN
CAUSTIC BATTERY ACID COULD CAUSE BURNS	MOVE SEAT FULLY REARWARD SECURE CHILD SEAT	DO NOT INSTALL A REAR-FACING CHILD RESTRAINT IN THIS SEATING POSITION	PARKING LAMPS	BRAKE	FUEL
AVOID SPARKS OR FLAMES	PULL BELT OUT COMPLETELY THEN SECURE CHILD SEAT	DO NOT INSTALL A FORWARD-FACING CHILD RESTRAINT IN THIS SEATING POSITION	HAZARD WARNING FLASHER	COOLANT	OWNER'S MANUAL
SPARK OR FLAME COULD EXPLODE BATTERY	POWER WINDOW	DOOR LOCK UNLOCK	DAYTIME RUNNING LAMPS	ENGINE OIL PRESSURE	SERVICE MANUAL
			FOG LAMPS	ANTI-LOCK BRAKES	

NOTES

Section 1 Seats and Restraint Systems

Front Seats 1-2
Power Seats 1-2
Heated Seats 1-3
Reclining Seatbacks 1-4
Seatback Latches 1-6

Safety Belts 1-6
Safety Belts: They Are for Everyone 1-6
Questions and Answers About Safety Belts 1-11
How to Wear Safety Belts Properly 1-12
Driver Position 1-12
Safety Belt Use During Pregnancy 1-19
Passenger Position 1-20
Safety Belt Extender 1-20

Child Restraints 1-21
Older Children 1-21
Infants and Young Children 1-24
Child Restraint Systems 1-27
Top Strap 1-31
Top Strap Anchor Location 1-32
Lower Anchorages and Top Tethers for Children (LATCH System) 1-32
Securing a Child Restraint Designed for the LATCH System 1-34
Securing a Child Restraint in the Passenger Seat Position 1-37

Air Bag Systems 1-42
Where Are the Air Bags? 1-45
When Should an Air Bag Inflate? 1-47
What Makes an Air Bag Inflate? 1-48
How Does an Air Bag Restrain? 1-48
What Will You See After an Air Bag Inflates? ...1-49
Air Bag Off Switch 1-51
Servicing Your Air Bag-Equipped Vehicle 1-54

Restraint System Check 1-55
Checking Your Restraint Systems 1-55
Replacing Restraint System Parts After a Crash 1-56

Front Seats

Power Seats

Driver's Seat

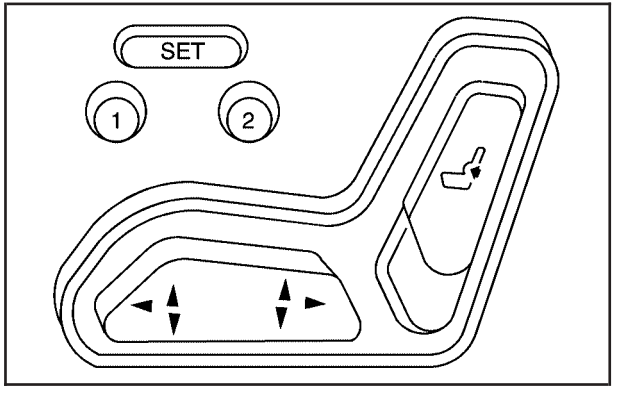

Power seat with memory seat controls shown

The power seat controls are located on the outboard side of the driver's seat.

Horizontal Control

- Move the front of the seat control up or down to adjust the front portion of the cushion.
- Move the rear of the seat control up or down to adjust the rear portion of the cushion.
- Lift up or push down on the center of the seat control to move the entire seat up or down.
- Slide the seat control forward or rearward to move the seat forward or rearward.

Vertical Control

The vertical control is used to operate the power lumbar.

Adjust the seat cushion using the horizontal control. To adjust the seatback, see *Reclining Seatbacks on page 1-4*. Once the seat is in the desired position, adjust the lumbar.

Press the vertical control forward to increase support and rearward to decrease support.

If your vehicle has the memory seat feature, you can program seat positions for up to two drivers. See *Memory Seat on page 2-52* for more information.

Passenger's Seat

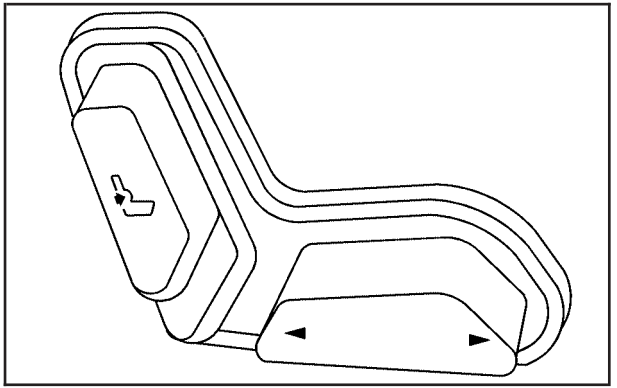

The power seat controls are located on the outboard side of the passenger's seat.

Horizontal Control

To adjust the seat, slide the control forward or rearward to move the seat forward or rearward.

Vertical Control

The vertical control is used to operate the power lumbar.

Adjust the seat cushion using the horizontal control. To adjust the seatback, see *Reclining Seatbacks on page 1-4*. Once the seat is in the desired position, adjust the lumbar.

Press the vertical control forward to increase support and rearward to decrease support.

Heated Seats

If your vehicle has this feature, the switches are located on the outboard side of the driver's and passenger's seats.

This feature will heat the lower cushion and lower back of the driver's and passenger's seats.

Press LO to turn the heater on low. Press HI to turn the heater on high. Put the switch in the center position to turn the heater off.

The ignition must be on for the heated seats to work. Also, the passenger's safety belt must be buckled for the heated seat feature to work on the passenger's seat.

If you turn the ignition off when the heated seats are on, the heated seats will turn off. They will come on again when you restart the vehicle.

Reclining Seatbacks

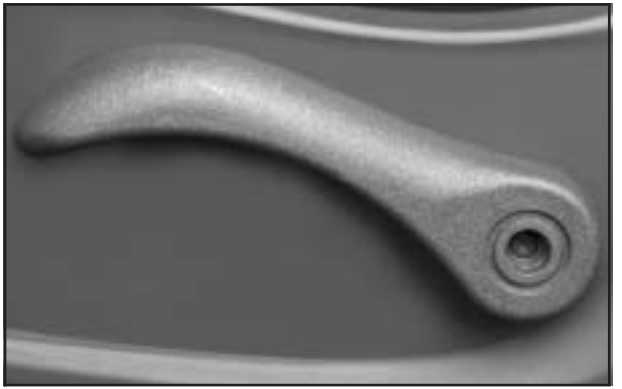

To recline the seatback, lift the lever on the outboard side of the seat cushion.

Release the lever to lock the seatback where you want it. Pull up on the lever without pushing on the seatback, and the seat will go to an upright position.

But don’t have a seatback reclined if your vehicle is moving.

⚠ CAUTION:

Sitting in a reclined position when your vehicle is in motion can be dangerous. Even if you buckle up, your safety belts can not do their job when you are reclined like this.

The shoulder belt can not do its job because it will not be against your body. Instead, it will be in front of you. In a crash you could go into it, receiving neck or other injuries.

The lap belt can not do its job either. In a crash the belt could go up over your abdomen. The belt forces would be there, not at your pelvic bones. This could cause serious internal injuries.

For proper protection when the vehicle is in motion, have the seatback upright. Then sit well back in the seat and wear your safety belt properly.

Seatback Latches

The seatbacks fold forward.

To fold the seatback forward, push the lever on the side of the seatback rearward and pull the seatback forward.

To return the seatback to the upright position, push it all the way back until the latch catches. If the seatback was reclined before being folded forward, it will return to the reclined position.

⚠ CAUTION:

If the seatback is not locked, it could move forward in a sudden stop or crash. That could cause injury to the person sitting there. Always press rearward on the seatback to be sure it is locked.

Safety Belts

Safety Belts: They Are for Everyone

This part of the manual tells you how to use safety belts properly. It also tells you some things you should not do with safety belts.

⚠ CAUTION:

Don't let anyone ride where he or she can't wear a safety belt properly. If you are in a crash and you're not wearing a safety belt, your injuries can be much worse. You can hit things inside the vehicle or be ejected from it. You can be seriously injured or killed. In the same crash, you might not be if you are buckled up. Always fasten your safety belt, and check that your passenger's belt is fastened properly too.

⚠ CAUTION:

It is extremely dangerous to ride in a cargo area, inside or outside of a vehicle. In a collision, people riding in these areas are more likely to be seriously injured or killed. Do not allow people to ride in any area of your vehicle that is not equipped with seats and safety belts. Be sure everyone in your vehicle is in a seat and using a safety belt properly.

Your vehicle has a light that comes on as a reminder to buckle up. See *Safety Belt Reminder Light on page 3-26*.

In most states and all Canadian provinces, the law says to wear safety belts. Here's why: *They work*.

You never know if you'll be in a crash. If you do have a crash, you don't know if it will be a bad one.

A few crashes are mild, and some crashes can be so serious that even buckled up a person wouldn't survive. But most crashes are in between. In many of them, people who buckle up can survive and sometimes walk away. Without belts they could have been badly hurt or killed.

After more than 30 years of safety belts in vehicles, the facts are clear. In most crashes buckling up does matter... a lot!

Why Safety Belts Work

When you ride in or on anything, you go as fast as it goes.

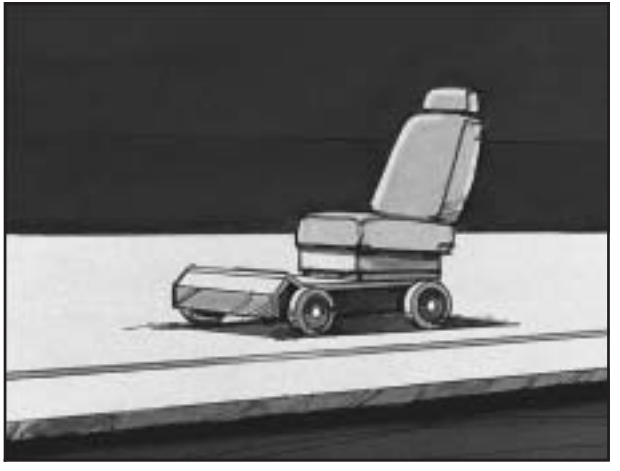

Take the simplest vehicle. Suppose it's just a seat on wheels.

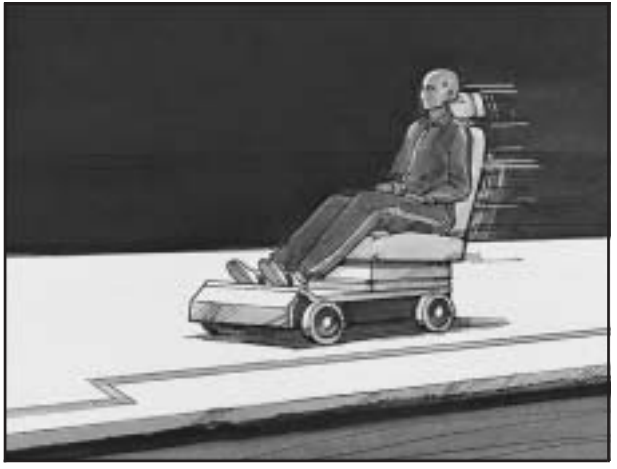

Put someone on it.

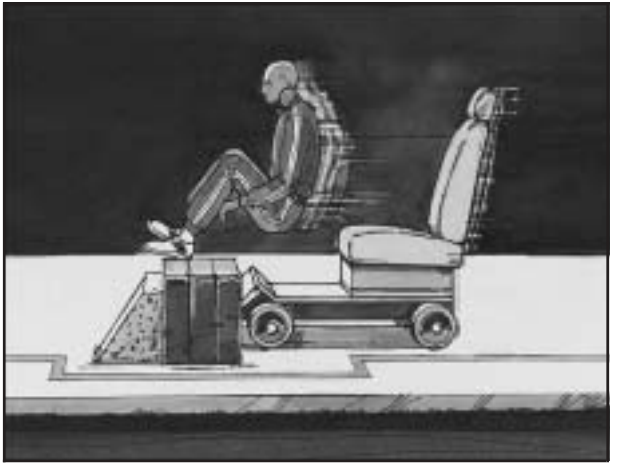

Get it up to speed. Then stop the vehicle. The rider doesn't stop.

The person keeps going until stopped by something. In a real vehicle, it could be the windshield...

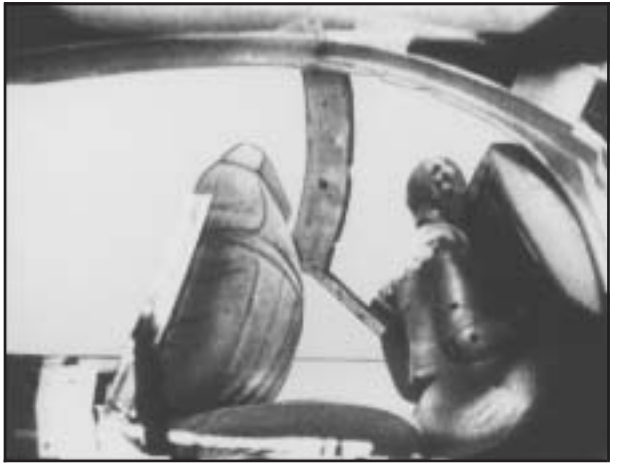

or the instrument panel...

or the safety belts!

With safety belts, you slow down as the vehicle does. You get more time to stop. You stop over more distance, and your strongest bones take the forces. That's why safety belts make such good sense.

Questions and Answers About Safety Belts

Q: Won't I be trapped in the vehicle after an accident if I'm wearing a safety belt?

A: You *could* be — whether you're wearing a safety belt or not. But you can unbuckle a safety belt, even if you're upside down. And your chance of being conscious during and after an accident, so you *can* unbuckle and get out, is *much* greater if you are belted.

Q: If my vehicle has air bags, why should I have to wear safety belts?

A: Air bags are in many vehicles today and will be in most of them in the future. But they are supplemental systems only; so they work *with* safety belts — not instead of them. Every air bag system ever offered for sale has required the use of safety belts. Even if you're in a vehicle that has air bags, you still have to buckle up to get the most protection. That's true not only in frontal collisions, but especially in side and other collisions.

Q: If I'm a good driver, and I never drive far from home, why should I wear safety belts?

A: You may be an excellent driver, but if you're in an accident — even one that isn't your fault — you and your passenger can be hurt. Being a good driver doesn't protect you from things beyond your control, such as bad drivers.

Most accidents occur within 25 miles (40 km) of home. And the greatest number of serious injuries and deaths occur at speeds of less than 40 mph (65 km/h).

Safety belts are for everyone.

How to Wear Safety Belts Properly

This part is only for people of adult size.

Be aware that there are special things to know about safety belts and children. And there are different rules for smaller children and babies. If a child will be riding in your vehicle, see *Older Children on page 1-21* or *Infants and Young Children on page 1-24*. Follow those rules for everyone's protection.

First, you'll want to know which restraint systems your vehicle has.

We'll start with the driver position.

Driver Position

This part describes the driver's restraint system.

Lap-Shoulder Belt

The driver has a lap-shoulder belt. Here is how to wear it properly.

1. Close and lock the door.
2. Adjust the seat so you can sit up straight. To see how, see "Seats" in the Index.

3. Pick up the latch plate and pull the belt across you. Do not let it get twisted.
4. Push the latch plate into the buckle until it clicks.

   Pull up on the latch plate to make sure it is secure. If the belt is not long enough, see *Safety Belt Extender on page 1-20*.

   Make sure the release button on the buckle is positioned so you would be able to unbuckle the safety belt quickly if you ever had to.

5. To make the lap part tight, pull up on the shoulder belt.

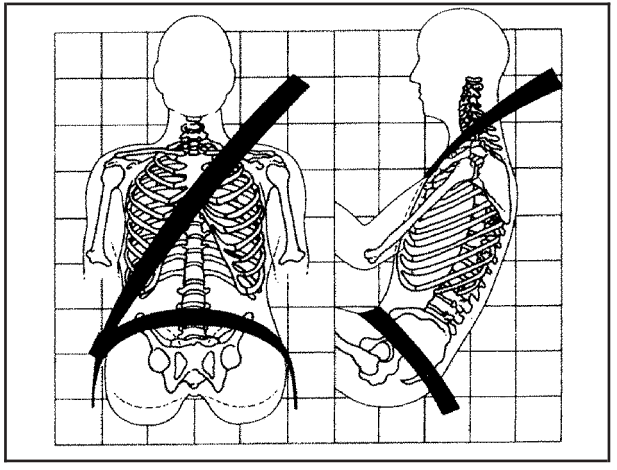

The lap part of the belt should be worn low and snug on the hips, just touching the thighs. In a crash, this applies force to the strong pelvic bones. And you would be less likely to slide under the lap belt. If you slid under it, the belt would apply force at your abdomen. This could cause serious or even fatal injuries. The shoulder belt should go over the shoulder and across the chest. These parts of the body are best able to take belt restraining forces.

The safety belt locks if there is a sudden stop or crash, or if you pull the belt very quickly out of the retractor.

Q: What's wrong with this?

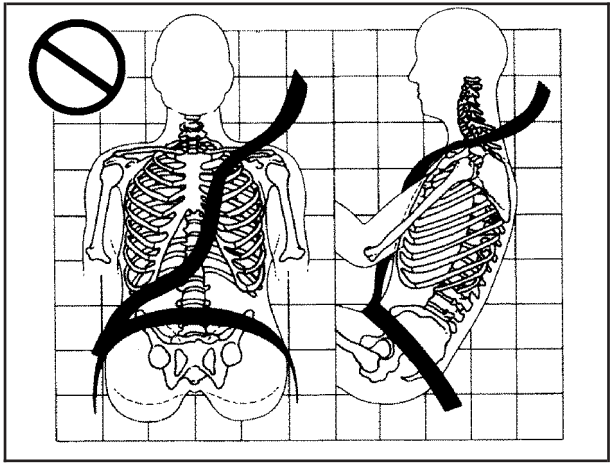

A: The shoulder belt is too loose. It will not give nearly as much protection this way.

⚠ CAUTION:

You can be seriously hurt if your shoulder belt is too loose. In a crash, you would move forward too much, which could increase injury. The shoulder belt should fit against your body.

Q: What's wrong with this?

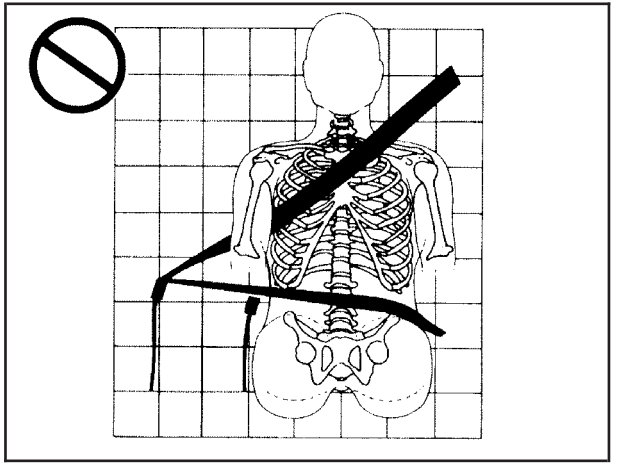

A: The belt is buckled in the wrong place.

⚠ CAUTION:

You can be seriously injured if your belt is buckled in the wrong place like this. In a crash, the belt would go up over your abdomen. The belt forces would be there, not at the pelvic bones. This could cause serious internal injuries. Always buckle your belt into the buckle nearest you.

Q: What's wrong with this?

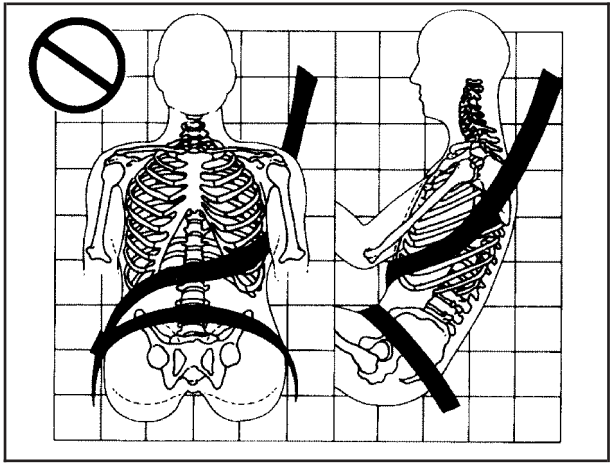

A: The shoulder belt is worn under the arm. It should be worn over the shoulder at all times.

⚠ CAUTION:

You can be seriously injured if you wear the shoulder belt under your arm. In a crash, your body would move too far forward, which would increase the chance of head and neck injury. Also, the belt would apply too much force to the ribs, which are not as strong as shoulder bones. You could also severely injure internal organs like your liver or spleen.

Q: What's wrong with this?

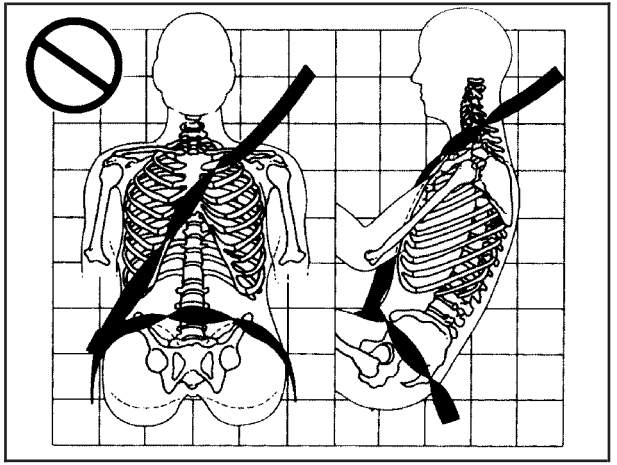

A: The belt is twisted across the body.

⚠ CAUTION:

You can be seriously injured by a twisted belt. In a crash, you would not have the full width of the belt to spread impact forces. If a belt is twisted, make it straight so it can work properly, or ask your dealer to fix it.

To unlatch the belt, just push the button on the buckle. The belt should go back out of the way.

Before you close the door, be sure the belt is out of the way. If you slam the door on it, you can damage both the belt and your vehicle.

Safety Belt Use During Pregnancy

Safety belts work for everyone, including pregnant women. Like all occupants, they are more likely to be seriously injured if they don't wear safety belts.

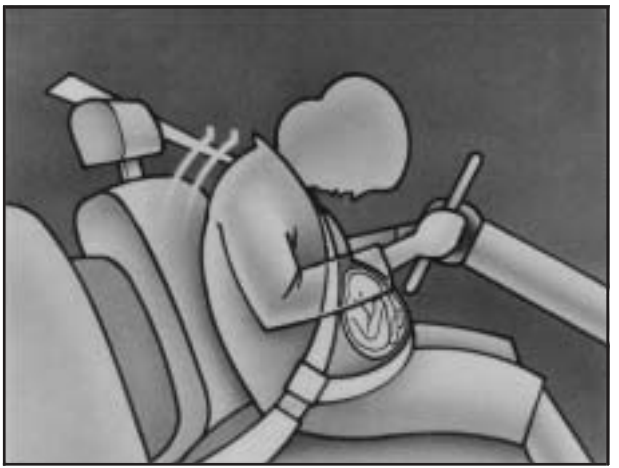

A pregnant woman should wear a lap-shoulder belt, and the lap portion should be worn as low as possible, below the rounding, throughout the pregnancy.

The best way to protect the fetus is to protect the mother. When a safety belt is worn properly, it's more likely that the fetus won't be hurt in a crash. For pregnant women, as for anyone, the key to making safety belts effective is wearing them properly.

Passenger Position

To learn how to wear the passenger's safety belt properly, see *Driver Position on page 1-12*.

The passenger's safety belt works the same way as the driver's safety belt — except for one thing. If you ever pull the shoulder portion of the belt out all the way, you will engage the child restraint locking feature. If this happens, just let the belt go back all the way and start again.

Safety Belt Extender

If the vehicle's safety belt will fasten around you, you should use it.

But if a safety belt isn't long enough to fasten, your dealer will order you an extender. It's free. When you go in to order it, take the heaviest coat you will wear, so the extender will be long enough for you. The extender will be just for you, and just for the seat in your vehicle that you choose. Don't let someone else use it, and use it only for the seat it is made to fit. To wear it, just attach it to the regular safety belt.

Child Restraints

Older Children

Older children who have outgrown booster seats should wear the vehicle's safety belts.

Q: What is the proper way to wear safety belts?

A: If possible, an older child should wear a lap-shoulder belt and get the additional restraint a shoulder belt can provide. The shoulder belt should not cross the face or neck. The lap belt should fit snugly below the hips, just touching the top of the thighs. It should never be worn over the abdomen, which could cause severe or even fatal internal injuries in a crash.

In a crash, children who are not buckled up can strike other people who are buckled up, or can be thrown out of the vehicle. Older children need to use safety belts properly.

⚠ CAUTION:

Never do this.

Here two children are wearing the same belt. The belt can not properly spread the impact forces. In a crash, the two children can be crushed together and seriously injured. A belt must be used by only one person at a time.

Q: What if a child is wearing a lap-shoulder belt, but the child is so small that the shoulder belt is very close to the child's face or neck?

A: Move the child toward the center of the vehicle, but be sure that the shoulder belt still is on the child's shoulder, so that in a crash the child's upper body would have the restraint that belts provide.

⚠ CAUTION:

Never do this.

Here a child is sitting in a seat that has a lap-shoulder belt, but the shoulder part is behind the child. If the child wears the belt in this way, in a crash the child might slide under the belt. The belt's force would then be applied right on the child's abdomen. That could cause serious or fatal injuries.

The lap portion of the belt should be worn low and snug on the hips, just touching the child's thighs. This applies belt force to the child's pelvic bones in a crash.

Infants and Young Children

Everyone in a vehicle needs protection! This includes infants and all other children. Neither the distance traveled nor the age and size of the traveler changes the need, for everyone, to use safety restraints. In fact, the law in every state in the United States and in every Canadian province says children up to some age must be restrained while in a vehicle.

Every time infants and young children ride in vehicles, they should have the protection provided by appropriate restraints. Young children should not use the vehicle's adult safety belts alone, unless there is no other choice. Instead, they need to use a child restraint.

⚠ CAUTION:

People should never hold a baby in their arms while riding in a vehicle. A baby does not weigh much — until a crash. During a crash a baby will become so heavy it is not possible to hold it. For example, in a crash at only 25 mph (40 km/h), a 12-lb. (5.5 kg) baby will suddenly become a 240-lb. (110 kg) force on a person's arms. A baby should be secured in an appropriate restraint.

⚠ CAUTION:

Children who are up against, or very close to, any air bag when it inflates can be seriously injured or killed. Air bags plus lap-shoulder belts offer outstanding protection for adults and older children, but not for young children and infants. Neither the vehicle's safety belt system nor its air bag system is designed for them. Young children and infants need the protection that a child restraint system can provide.

Q: What are the different types of add-on child restraints?

A: Add-on child restraints, which are purchased by the vehicle's owner, are available in four basic types. Selection of a particular restraint should take into consideration not only the child's weight, height, and age but also whether or not the restraint will be compatible with the motor vehicle in which it will be used.

For most basic types of child restraints, there are many different models available. When purchasing a child restraint, be sure it is designed to be used in a motor vehicle. If it is, the restraint will have a label saying that it meets federal motor vehicle safety standards.

The restraint manufacturer's instructions that come with the restraint state the weight and height limitations for a particular child restraint. In addition, there are many kinds of restraints available for children with special needs.

⚠ CAUTION:

Newborn infants need complete support, including support for the head and neck. This is necessary because a newborn infant's neck is weak and its head weighs so much compared with the rest of its body. In a crash, an infant in a rear-facing seat settles into the restraint, so the crash forces can be distributed across the strongest part of an infant's body, the back and shoulders. Infants always should be secured in appropriate infant restraints.

⚠ CAUTION:

The body structure of a young child is quite unlike that of an adult or older child, for whom the safety belts are designed. A young child's hip bones are still so small that the vehicle's regular safety belt may not remain low on the hip bones, as it should. Instead, it may settle up around the child's abdomen. In a crash, the belt would apply force on a body area that is unprotected by any bony structure. This alone could cause serious or fatal injuries. Young children always should be secured in appropriate child restraints.

Child Restraint Systems

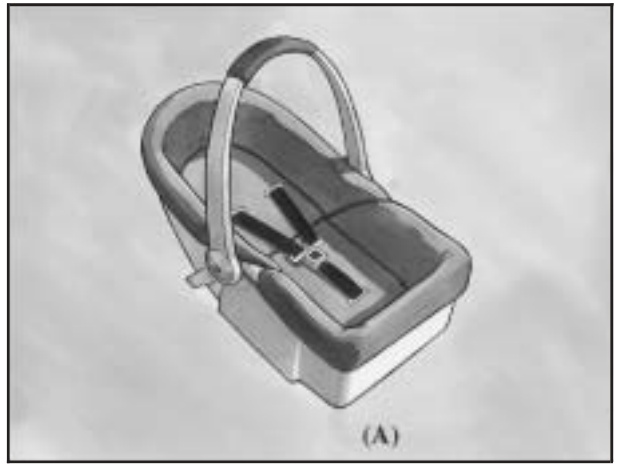

An infant car bed (A), a special bed made for use in a motor vehicle, is an infant restraint system designed to restrain or position a child on a continuous flat surface. Make sure that the infant's head rests toward the center of the vehicle.

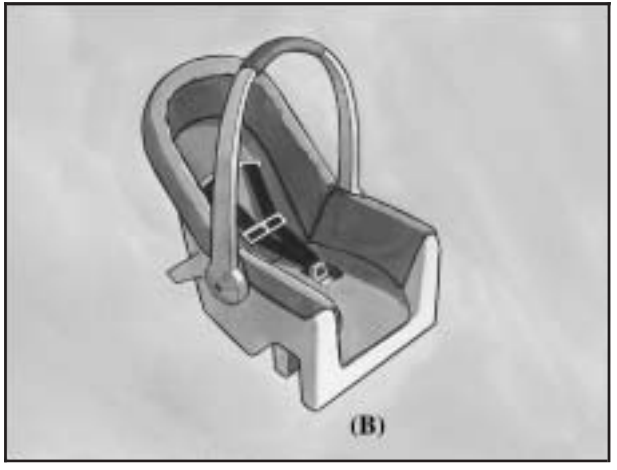

A rear-facing infant seat (B) provides restraint with the seating surface against the back of the infant. The harness system holds the infant in place and, in a crash, acts to keep the infant positioned in the restraint.

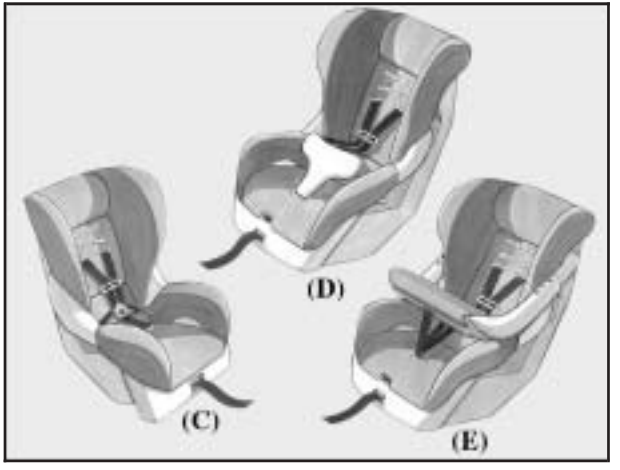

A forward-facing child seat (C-E) provides restraint for the child's body with the harness and also sometimes with surfaces such as T-shaped or shelf-like shields.

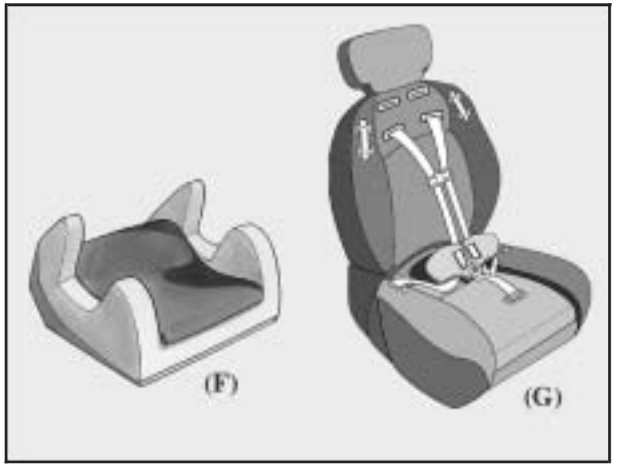

A booster seat (F-G) is a child restraint designed to improve the fit of the vehicle's safety belt system. Some booster seats have a shoulder belt positioner, and some high-back booster seats have a five-point harness. A booster seat can also help a child to see out the window.

Q: How do child restraints work?

A: A child restraint system is any device designed for use in a motor vehicle to restrain, seat, or position children. A built-in child restraint system is a permanent part of the motor vehicle. An add-on child restraint system is a portable one, which is purchased by the vehicle's owner.

For many years, add-on child restraints have used the adult belt system in the vehicle. To help reduce the chance of injury, the child also has to be secured within the restraint. The vehicle's belt system secures the add-on child restraint in the vehicle, and the add-on child restraint's harness system holds the child in place within the restraint.

One system, the three-point harness, has straps that come down over each of the infant's shoulders and buckle together at the crotch. The five-point harness system has two shoulder straps, two hip straps and a crotch strap. A shield may take the place of hip straps. A T-shaped shield has shoulder straps that are attached to a flat pad which rests low against the child's body. A shelf- or armrest-type shield has straps that are attached to a wide, shelf-like shield that swings up or to the side.

When choosing a child restraint, be sure the child restraint is designed to be used in a vehicle. If it is, it will have a label saying that it meets federal motor vehicle safety standards.

Then follow the instructions for the restraint. You may find these instructions on the restraint itself or in a booklet, or both. These restraints use the belt system in your vehicle, but the child also has to be secured within the restraint to help reduce the chance of personal injury. When securing an add-on child restraint, refer to the instructions that come with the restraint which may be on the restraint itself or in a booklet, or both, and to this manual. The child restraint instructions are important, so if they are not available, obtain a replacement copy from the manufacturer.

The child restraint must be secured properly in the passenger seat. If you want to secure a rear-facing child restraint in the passenger's seat, turn off the passenger's air bag. See *Air Bag Off Switch on page 1-51* and *Securing a Child Restraint in the Passenger Seat Position on page 1-37* for more on this, including important safety information.

⚠ CAUTION:

A child in a rear-facing child restraint can be seriously injured or killed if the passenger's air bag inflates. This is because the back of the rear-facing child restraint would be very close to the inflating air bag. Be sure to turn off the air bag before using a rear-facing child restraint in the passenger seat position.

Keep in mind that an unsecured child restraint can move around in a collision or sudden stop and injure people in the vehicle. Be sure to properly secure any child restraint in your vehicle — even when no child is in it.

Top Strap

Some child restraints have a top strap, or "top tether." It can help restrain the child restraint during a collision. For it to work, a top strap must be properly anchored to the vehicle. Some top strap-equipped child restraints are designed for use with or without the top strap being anchored. Others require the top strap always to be anchored. Be sure to read and follow the instructions for your child restraint. If yours requires that the top strap be anchored, do not use the restraint unless it is anchored properly.

If the child restraint does not have a top strap, one can be obtained, in kit form, for many child restraints. Ask the child restraint manufacturer whether or not a kit is available.

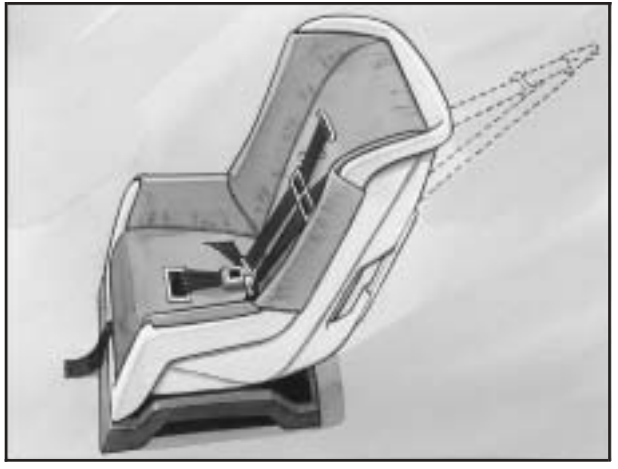

In Canada, the law requires that forward-facing child restraints have a top strap, and that the strap be anchored. In the United States, some child restraints also have a top strap. If your child restraint has a top strap, it should be anchored.

⚠ CAUTION:

Each top tether bracket is designed to anchor only one child restraint. Attaching more than one child restraint to a single bracket could cause the anchor to come loose or even break during a crash. A child or others could be injured if this happens. To help prevent injury to people and damage to your vehicle, attach only one child restraint per bracket.

To locate the top strap anchor see “Top Strap Anchor Location” following.

Once you have the top strap anchored, you will be ready to secure the child restraint itself. Tighten the top strap when and as the child restraint manufacturer’s instructions say.

Top Strap Anchor Location

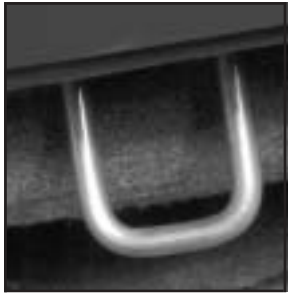

The anchor point for the top strap is a loop located at the back of the passenger side seat.

Lower Anchorages and Top Tethers for Children (LATCH System)

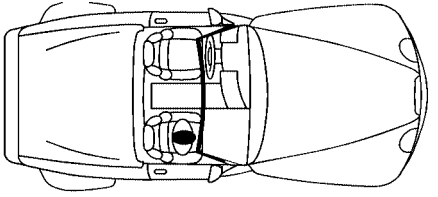

Your vehicle is equipped with the LATCH system. It is located in the passenger seat.

This system, designed to make installation of child restraints easier, does not use the vehicle's safety belts. Instead, it uses vehicle anchors (A, B) and child restraint attachments to secure the restraints. Some restraints also use another vehicle anchor to secure a top tether strap (C).

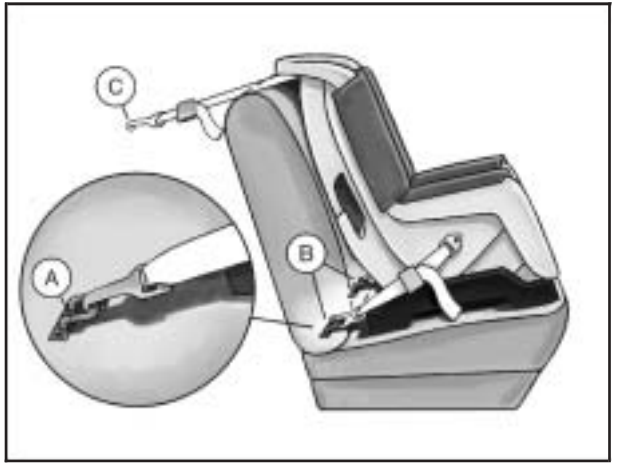

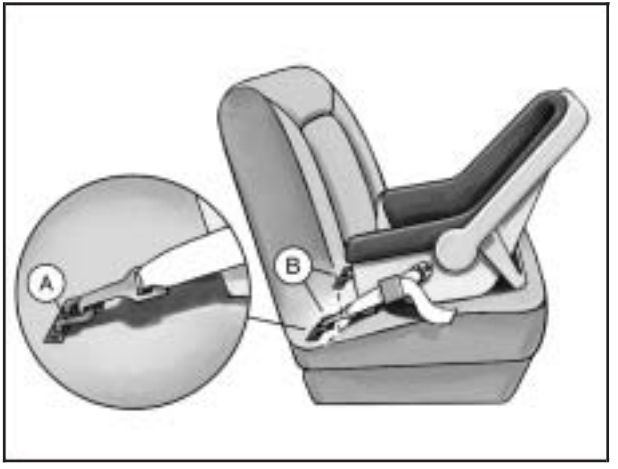

In order to use the LATCH system in your vehicle, you need a child restraint designed for that system.

To assist you in locating the anchors for this child restraint system, place your hand in a palm-up position and reach up between the seat cushion and the seatback.

⚠ CAUTION:

If a LATCH-type child restraint is not attached to its anchorage points, the restraint will not be able to protect the child correctly. In a crash, the child could be seriously injured or killed. Make sure that a LATCH-type child restraint is properly installed using the anchorage points, or use the vehicle's safety belts to secure the restraint, following the instructions that came with that restraint, and also the instructions in this manual.

Securing a Child Restraint Designed for the LATCH System

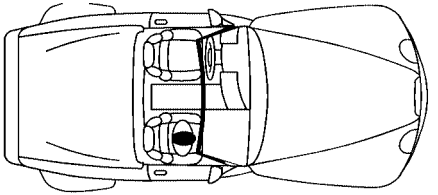

Your vehicle has a passenger air bag. There is an air bag off switch in the glove box you can use to turn off the passenger's air bag. See *Air Bag Off Switch on page 1-51* for more on this, including important safety information.

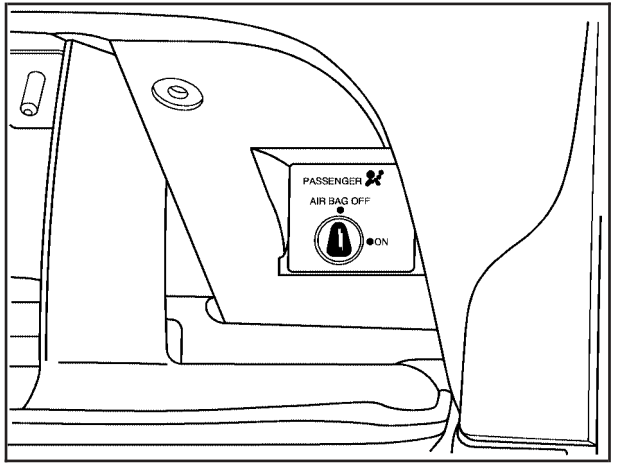

Unless the passenger's air bag has been turned off, *never* put a rear-facing child restraint in this vehicle. Here is why:

⚠ CAUTION:

A child in a rear-facing child restraint can be seriously injured or killed if the passenger's air bag inflates. This is because the back of the rear-facing child restraint would be very close to the inflating air bag. Do not use a rear-facing child restraint in this vehicle unless the passenger's air bag has been turned off.

Even though the air bag off switch is designed to turn off the passenger's frontal air bag, no system is fail-safe, and no one can guarantee that an air bag will not deploy under some unusual circumstance, even though it is turned off. We recommend that rear-facing child restraints be transported in vehicles with a rear seat that will accommodate a rear-facing child restraint, whenever possible.

If you secure a forward-facing child restraint in the passenger seat, always move the passenger seat as far back as it will go.

⚠ CAUTION:

If the air bag readiness light ever comes on when you have turned off the passenger's frontal air bag, it means that something may be wrong with the air bag system. The passenger's frontal air bag could inflate even though the switch is off. If this ever happens, do not let anyone whom the national government has identified as a member of a passenger air bag risk group sit in the passenger's position (for example, do not secure a rear-facing child restraint in your vehicle) until you have your vehicle serviced. See *Air Bag Off Switch on page 1-51*.

1. Your vehicle has a passenger's air bag. See *Air Bag Off Switch on page 1-51*. If your child restraint is forward-facing, always move the seat as far back as it will go before securing it in this seat. See *Power Seats on page 1-2*. Never use a rear-facing child restraint in this seat unless the air bag is off.
2. Find the LATCH anchorages in the passenger seat. See *Lower Anchorages and Top Tethers for Children (LATCH System) on page 1-32*.
3. Put the child restraint on the seat.
4. Attach and tighten the LATCH attachments on the child restraint to the LATCH anchorages in the vehicle. The child restraint instructions will show you how.
5. If the child restraint is forward-facing, attach and tighten the top tether to the top tether anchorage. The child restraint instructions will show you how. Also see *Top Strap on page 1-30*.
6. Push and pull the child restraint in different directions to be sure it is secure.

To remove the child restraint, simply unhook the top strap from the top tether anchor and then disconnect the anchor points.

If you were using a rear-facing child restraint, turn on the passenger's air bag when you remove the rear-facing child restraint from the vehicle unless the person who will be sitting there is a member of a passenger air bag risk group. See *Air Bag Off Switch on page 1-51*.

⚠ CAUTION:

If the passenger's frontal air bag is turned off for a person who is not in a risk group identified by the national government, that person will not have the extra protection of a frontal air bag. In a crash, the air bag would not be able to inflate and help protect the person sitting there. Do not turn off the passenger's frontal air bag unless the person sitting there is in a risk group. See *Air Bag Off Switch on page 1-51* for more on this, including important safety information.

Securing a Child Restraint in the Passenger Seat Position

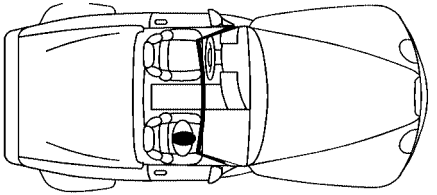

Your vehicle has a passenger air bag. There is an air bag off switch in the glove box you can use to turn off the passenger's air bag. See *Air Bag Off Switch on page 1-51* for more on this, including important safety information.

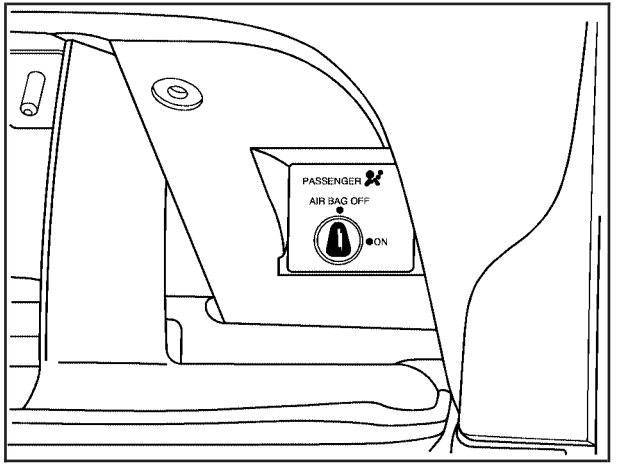

Unless the passenger's air bag has been turned off, *never* put a rear-facing child restraint in this vehicle. Here is why:

⚠ CAUTION:

A child in a rear-facing child restraint can be seriously injured or killed if the passenger's air bag inflates. This is because the back of the rear-facing child restraint would be very close to the inflating air bag. Do not use a rear-facing child restraint in this vehicle unless the passenger's air bag has been turned off.

Even though the air bag off switch is designed to turn off the passenger's frontal air bag, no system is fail-safe, and no one can guarantee that an air bag will not deploy under some unusual circumstance, even though it is turned off. We recommend that rear-facing child restraints be transported in vehicles with a rear seat that will accommodate a rear-facing child restraint, whenever possible.

If you secure a forward-facing child restraint in the passenger seat, always move the passenger seat as far back as it will go.

⚠ CAUTION:

If the air bag readiness light ever comes on when you have turned off the passenger's frontal air bag, it means that something may be wrong with the air bag system. The passenger's frontal air bag could inflate even though the switch is off. If this ever happens, do not let anyone whom the national government has identified as a member of a passenger air bag risk group sit in the passenger's position (for example, do not secure a rear-facing child restraint in your vehicle) until you have your vehicle serviced. See *Air Bag Off Switch on page 1-51*.

If your child restraint is equipped with the LATCH system, see *Lower Anchorages and Top Tethers for Children (LATCH System) on page 1-32*. See *Top Strap on page 1-30* if the child restraint has one.

If your child restraint does not have the LATCH system, you will be using the lap-shoulder belt. Be sure to follow the instructions that came with the child restraint. Secure the child in the child restraint when and as the instructions say.

1. Your vehicle has a passenger's air bag. If you are using a rear-facing child restraint in this seat, make sure the air bag is turned off. See *Air Bag Off Switch on page 1-51*. If your child restraint is forward-facing, always move the seat as far back as it will go before securing it in this seat. See *Power Seats on page 1-2*.
2. Put the child restraint on the seat.
3. Pick up the latch plate, and run the lap and shoulder portions of the vehicle's safety belt through or around the restraint. The child restraint instructions will show you how.

4. Buckle the belt. Make sure the release button is positioned so you would be able to unbuckle the safety belt quickly if you ever had to.

5. Pull the rest of the shoulder belt all the way out of the retractor to set the lock.

6. To tighten the belt, push down on the child restraint, pull the shoulder portion of the belt to tighten the lap portion of the belt and feed the shoulder belt back into the retractor. You may find it helpful to use your knee to push down on the child restraint as you tighten the belt.
7. Push and pull the child restraint in different directions to be sure it is secure.

To remove the child restraint, just unbuckle the vehicle's safety belt and let it go back all the way. The safety belt will move freely again and be ready to work for an adult or larger child passenger.

If you were using a rear-facing child restraint, turn on the passenger's air bag when you remove the rear-facing child restraint from the vehicle unless the person who will be sitting there is a member of a passenger air bag risk group. See *Air Bag Off Switch on page 1-51*.

⚠ CAUTION:

If the passenger's frontal air bag is turned off for a person who is not in a risk group identified by the national government, that person will not have the extra protection of a frontal air bag. In a crash, the air bag would not be able to inflate and help protect the person sitting there. Do not turn off the passenger's frontal air bag unless the person sitting there is in a risk group. See *Air Bag Off Switch on page 1-51* for more on this, including important safety information.

Air Bag Systems

This part explains the frontal and side impact air bag systems.

Your vehicle has four air bags — a frontal air bag for the driver, another frontal air bag for the passenger, a side impact air bag for the driver, and another side impact air bag for the passenger.

Frontal air bags are designed to help reduce the risk of injury from the force of an inflating frontal air bag. But these air bags must inflate very quickly to do their job and comply with federal regulations.

Here are the most important things to know about the air bag systems:

⚠ CAUTION:

You can be severely injured or killed in a crash if you are not wearing your safety belt — even if you have air bags. Wearing your safety belt during a crash helps reduce your chance of hitting things inside the vehicle or being ejected from it. Air bags are designed to work with safety belts but do not replace them.

Frontal air bags for the driver and passenger are designed to deploy only in moderate to severe frontal and near frontal crashes. They are not designed to inflate at all in rollover, rear or low-speed frontal crashes, or in many side crashes. And, for some unrestrained occupants, frontal air bags may provide less protection in frontal crashes than more forceful air bags have provided in the past.

CAUTION: (Continued)

CAUTION: (Continued)

The side impact air bags for the driver and passenger are designed to inflate only in moderate to severe crashes where something hits the side of your vehicle. They are not designed to inflate in frontal, in rollover or in rear crashes.

Everyone in your vehicle should wear a safety belt properly — whether or not there is an air bag for that person.

⚠ CAUTION:

Both frontal and side impact air bags inflate with great force, faster than the blink of an eye. If you are too close to an inflating air bag, as you would be if you were leaning forward, it could seriously injure you. Safety belts help keep you in position for air bag inflation before and during a crash. Always wear your safety belt, even with frontal air bags. The driver should sit as far back as possible while still maintaining control of the vehicle. Front occupants should not lean on or sleep against the door.

⚠ CAUTION:

Anyone who is up against, or very close to, any air bag when it inflates can be seriously injured or killed. Air bags plus lap-shoulder belts offer the best protection for adults, but not for young children and infants. Neither the vehicle's safety belt system nor its air bag system is designed for them. Young children and infants need the protection that a child restraint system can provide. Always secure children properly in your vehicle. To read how, see the part of this manual called "Older Children" or "Infants and Young Children."

There is an air bag readiness light on the instrument panel, which shows the air bag symbol.

The system checks the air bag electrical system for malfunctions. The light tells you if there is an electrical problem. See *Air Bag Readiness Light on page 3-26* for more information.

Where Are the Air Bags?

The driver's frontal air bag is in the middle of the steering wheel.

The passenger's frontal air bag is in the instrument panel on the passenger's side.

The driver's side impact air bag is in the side of the driver's seatback closest to the door.

The passenger's side impact air bag is in the side of the passenger's seatback closest to the door.

⚠ CAUTION:

If something is between an occupant and an air bag, the bag might not inflate properly or it might force the object into that person causing severe injury or even death. The path of an inflating air bag must be kept clear. Do not put anything between an occupant and an air bag, and do not attach or put anything on the steering wheel hub or on or near any other air bag covering. Do not let seat covers block the inflation path of a side impact air bag.

When Should an Air Bag Inflate?

The driver's and passenger's frontal air bags are designed to inflate in moderate to severe frontal or near-frontal crashes. But they are designed to inflate only if the impact speed is above the system's designed "threshold level."

In addition, your vehicle has "dual stage" frontal air bags, which adjust the amount of restraint according to crash severity. For moderate frontal impacts, these air bags inflate at a level less than full deployment. For more severe frontal impacts, full deployment occurs. If the front of your vehicle goes straight into a wall that does not move or deform, the threshold level for the reduced deployment is about 12 to 16 mph (19 to 26 km/h), and the threshold level for a full deployment is about 20 to 25 mph (32 to 40 km/h). The threshold level can vary, however, with specific vehicle design, so that it can be somewhat above or below this range.

If your vehicle strikes something that will move or deform, such as a parked car, the threshold level will be higher. The driver's and passenger's frontal air bags are not designed to inflate in rollovers, rear impacts, or in many side impacts because inflation would not help the occupant.

Side impact air bags are designed to inflate in moderate to severe side crashes. A side impact air bag will inflate if the crash severity is above the system's designed "threshold level." The threshold level can vary with specific vehicle design. Side impact air bags are not designed to inflate in frontal or near-frontal impacts, rollovers or rear impacts, because inflation would not help the occupant. A side impact air bag will only deploy on the side of the vehicle that is struck.

In any particular crash, no one can say whether an air bag should have inflated simply because of the damage to a vehicle or because of what the repair costs were. For frontal air bags, inflation is determined by the angle of the impact and how quickly the vehicle slows down in frontal and near-frontal impacts. For side impact air bags, inflation is determined by the location and severity of the impact.

What Makes an Air Bag Inflate?

In an impact of sufficient severity, the air bag sensing system detects that the vehicle is in a crash. For both frontal and side impact air bags, the sensing system triggers a release of gas from the inflator, which inflates the air bag. The inflator, the air bag and related hardware are all part of the air bag modules inside the steering wheel, the instrument panel, and the side of the front seatbacks closest to the door.

How Does an Air Bag Restrain?

In moderate to severe frontal or near frontal collisions, even belted occupants can contact the steering wheel or the instrument panel. In moderate to severe side collisions, even belted occupants can contact the inside of the vehicle. The air bag supplements the protection provided by safety belts. Air bags distribute the force of the impact more evenly over the occupant's upper body, stopping the occupant more gradually. But the frontal air bags would not help you in many types of collisions, including rollovers, rear impacts, and many side impacts, primarily because an occupant's motion is not toward the air bag. Side impact air bags would not help you in many types of collisions, including frontal or near frontal collisions, rollovers, and rear impacts, primarily because an occupant's motion is not toward those air bags. Air bags should never be regarded as anything more than a supplement to safety belts, and then only in moderate to severe frontal or near-frontal collisions for the driver's and passenger's frontal air bags, and only in moderate to severe side collisions for vehicles with a driver's and passenger's side impact air bag.

What Will You See After an Air Bag Inflates?

After the air bag inflates, it quickly deflates, so quickly that some people may not even realize the air bag inflated. Some components of the air bag module will be hot for a short time. These components include the steering wheel hub for the driver's frontal air bag and the instrument panel for the passenger's frontal air bag and the side of the seatback closest to the driver's and/or passenger's door. The parts of the bag that come into contact with you may be warm, but not too hot to touch. There will be some smoke and dust coming from the vents in the deflated air bags. Air bag inflation doesn't prevent the driver from seeing or being able to steer the vehicle, nor does it stop people from leaving the vehicle.

⚠ CAUTION:

When an air bag inflates, there is dust in the air. This dust could cause breathing problems for people with a history of asthma or other breathing trouble. To avoid this, everyone in the vehicle should get out as soon as it is safe to do so. If you have breathing problems but can not get out of the vehicle after an air bag inflates, then get fresh air by opening a window or a door. If you experience breathing problems following an air bag deployment, you should seek medical attention.

Your vehicle has a feature that will automatically unlock the doors and turn the interior lamps on when the air bags inflate (if battery power is available). You can lock the doors again and turn the interior lamps off by using the door lock and interior lamp controls.

In many crashes severe enough to inflate an air bag, windshields are broken by vehicle deformation. Additional windshield breakage may also occur from the passenger air bag.

- Air bags are designed to inflate only once. After an air bag inflates, you'll need some new parts for your air bag system. If you don't get them, the air bag system won't be there to help protect you in another crash. A new system will include air bag modules and possibly other parts. The service manual for your vehicle covers the need to replace other parts.
- Your vehicle is equipped with electronic frontal sensors, which help the sensing system distinguish between a moderate frontal impact and a more severe frontal impact. Your vehicle is also equipped with a crash sensing and diagnostic module, which records information about the frontal air bag system. The module records information about the readiness of the system, when the system commands air bag inflation and driver's safety belt usage at deployment. The module also records speed, engine RPM, brake and throttle data. See *Vehicle Data Collection and Event Data Recorders on page 7-10* for more information.
- Let only qualified technicians work on your air bag systems. Improper service can mean that an air bag system won't work properly. See your dealer for service.

Notice: **If you damage the covering for the driver's or the passenger's air bag, the bag may not work properly. You may have to replace the air bag module in the steering wheel or both the air bag module and the instrument panel for the passenger's air bag. Do not open or break the air bag coverings.**

Air Bag Off Switch

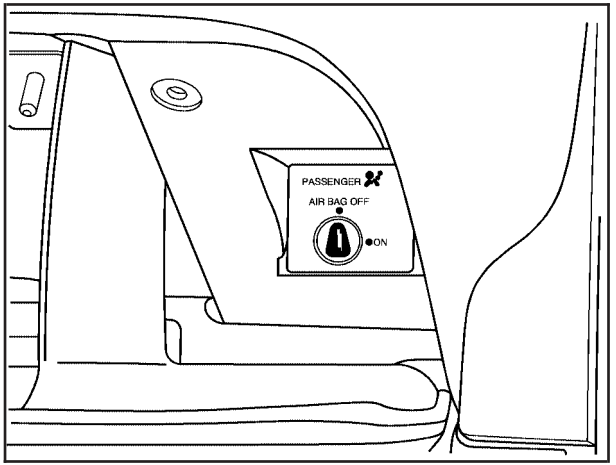

Your vehicle has a switch inside the glovebox that you can use to turn off the passenger's frontal air bag.

This switch should only be turned to AIR BAG OFF if the person in the passenger's position is a member of a passenger risk group identified by the national government as follows:

Infant. An infant (less than 1 year old) must ride in the front seat because:

- *my vehicle has no rear seat;*
- *my vehicle has a rear seat too small to accommodate a rear-facing infant seat; or*
- *the infant has a medical condition which, according to the infant's physician, makes it necessary for the infant to ride in the front seat so that the driver can constantly monitor the child's condition.*

Child age 1 to 12. A child age 1 to 12 must ride in the front seat because:

- *my vehicle has no rear seat;*
- *although children ages 1 to 12 ride in the rear seat(s) whenever possible, children ages 1 to 12 sometimes must ride in the front because no space is available in the rear seat(s) of my vehicle; or*
- *the child has a medical condition which, according to the child's physician, makes it necessary for the child to ride in the front seat so that the driver can constantly monitor the child's condition.*

Medical Condition. A passenger has a medical condition which, according to his or her physician:

- *causes the passenger air bag to pose a special risk for the passenger; and*
- *makes the potential harm from the passenger air bag in a crash greater than the potential harm from turning off the air bag and allowing the passenger, even if belted, to hit the dashboard or windshield in a crash.*

⚠ CAUTION:

If the passenger's frontal air bag is turned off for a person who is not in a risk group identified by the national government, that person will not have the extra protection of a frontal air bag. In a crash, the frontal air bag would not be able to inflate and help protect the person sitting there. Do not turn off the passenger's frontal air bag unless the person sitting there is in a risk group.

To turn off the passenger's frontal air bag, insert your ignition key into the switch, push in, and move the switch to AIR BAG OFF.

The air bag off light, located on the roof panel above the rearview mirror, will come on and stay on to let you know that the passenger's frontal air bag is off. See *Air Bag Off Light on page 3-28*.

The passenger's frontal air bag will remain off until you turn it back on again.

⚠ CAUTION:

If the air bag readiness light ever comes on when you have turned off the passenger's frontal air bag, it means that something may be wrong with the air bag system. The passenger's frontal air bag could inflate even though the switch is off. If this ever happens, do not let anyone whom the national government has identified as a member of a passenger air bag risk group sit in the passenger's position (for example, do not secure a rear-facing child restraint in your vehicle) until you have your vehicle serviced.

To turn the passenger's frontal air bag on again, insert your ignition key into the switch, push in, and move the switch to the on position.

Servicing Your Air Bag-Equipped Vehicle

Air bags affect how your vehicle should be serviced. There are parts of the air bag systems in several places around your vehicle. Your dealer and the service manual have information about servicing your vehicle and the air bag systems. To purchase a service manual, see *Service Publications Ordering Information on page 7-13*.

⚠ CAUTION:

For up to 10 seconds after the ignition key is turned off and the battery is disconnected, an air bag can still inflate during improper service. You can be injured if you are close to an air bag when it inflates. Avoid yellow connectors. They are probably part of the air bag system. Be sure to follow proper service procedures, and make sure the person performing work for you is qualified to do so.

The air bag systems do not need regular maintenance.

Restraint System Check

Checking Your Restraint Systems

Now and then, make sure the safety belt reminder light and all your belts, buckles, latch plates, retractors and anchorages are working properly. Look for any other loose or damaged safety belt system parts. If you see anything that might keep a safety belt system from doing its job, have it repaired.

Torn or frayed safety belts may not protect you in a crash. They can rip apart under impact forces. If a belt is torn or frayed, get a new one right away.

Also look for any opened or broken air bag covers, and have them repaired or replaced. (The air bag system does not need regular maintenance.)

Replacing Restraint System Parts After a Crash

⚠ CAUTION:

A crash can damage the restraint systems in your vehicle. A damaged restraint system may not properly protect the person using it, resulting in serious injury or even death in a crash. To help make sure your restraint systems are working properly after a crash, have them inspected and any necessary replacements made as soon as possible.

If you've had a crash, do you need new belts or LATCH system parts?

After a very minor collision, nothing may be necessary. But if the belts were stretched, as they would be if worn during a more severe crash, then you need new parts.

If the LATCH system was being used during a more severe crash, you may need new LATCH system parts.

If belts are cut or damaged, replace them. Collision damage also may mean you will need to have LATCH system, safety belt or seat parts repaired or replaced. New parts and repairs may be necessary even if the belt or LATCH system wasn't being used at the time of the collision.

If an air bag inflates, you'll need to replace air bag system parts. See the part on the air bag system earlier in this section.

Section 2 Features and Controls

Keys 2-2
Remote Keyless Entry System 2-3
Remote Keyless Entry System Operation 2-4

Doors and Locks 2-6
Door Locks 2-6
Power Door Locks 2-7
Programmable Automatic Door Locks 2-8
Leaving Your Vehicle 2-8
Tailgate 2-8

Windows 2-9
Power Windows 2-10
Sun Visors 2-11

Theft-Deterrent Systems 2-11
Content Theft-Deterrent 2-11
Passlock® 2-13

Starting and Operating Your Vehicle 2-13
New Vehicle Break-In 2-13
Ignition Positions 2-14
Starting Your Engine 2-15
Automatic Transmission Operation 2-16
Parking Brake 2-18
Shifting Into Park (P) 2-19
Shifting Out of Park (P) 2-20
Parking Over Things That Burn 2-21
Engine Exhaust 2-21
Running Your Engine While You Are Parked 2-22

Mirrors 2-23
Manual Rearview Mirror 2-23
Automatic Dimming Rearview Mirror with HomeLink® 2-23
Outside Power Heated Mirrors 2-24
Outside Convex Mirror 2-25
Outside Automatic Dimming Heated Mirror 2-25

HomeLink® Transmitter 2-26
Programming the HomeLink® Transmitter 2-27

Storage Areas 2-30
Glove Box 2-30
Cupholder(s) 2-30
Instrument Panel Storage Area 2-30
Center Console Storage Area 2-30
Map Pocket 2-30
Cargo Cover 2-31
Floor Tracks 2-35
Cargo Net System 2-36
Side-Saddle Storage 2-41

Convertible Top 2-45

Vehicle Personalization 2-52
Memory Seat 2-52

Keys

⚠ CAUTION:

Leaving children in a vehicle with the ignition key is dangerous for many reasons. They could operate the power windows or other controls or even make the vehicle move. The children or others could be badly injured or even killed. Do not leave the keys in a vehicle with children.

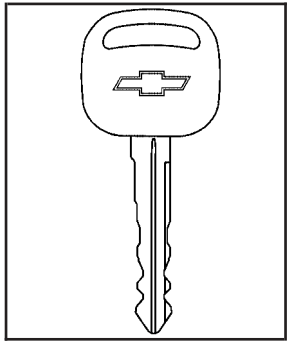

One key is used for the ignition, the doors and all locks except the center console.

Center Console Storage Area Key

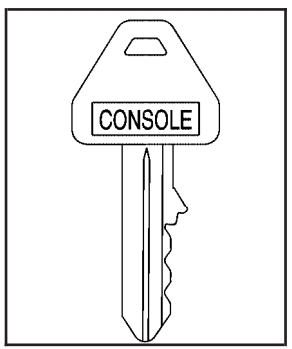

A separate key is provided for locking the center console storage area.

If you need a new key, contact your dealer for assistance. In an emergency, contact Chevrolet Roadside Assistance. See *Roadside Assistance Program on page 7-6* for more information.

Notice: **If you ever lock your keys in your vehicle, you may have to damage the vehicle to get in. Be sure you have spare keys.**

Remote Keyless Entry System

Your keyless entry system operates on a radio frequency subject to Federal Communications Commission (FCC) Rules and with Industry Canada.

This device complies with Part 15 of the FCC Rules. Operation is subject to the following two conditions:

1. This device may not cause interference, and
2. This device must accept any interference received, including interference that may cause undesired operation of the device.

This device complies with RSS-210 of Industry Canada. Operation is subject to the following two conditions:

1. This device may not cause interference, and
2. This device must accept any interference received, including interference that may cause undesired operation of the device.

Changes or modifications to this system by other than an authorized service facility could void authorization to use this equipment.

At times you may notice a decrease in range. This is normal for any remote keyless entry system. If the transmitter does not work or if you have to stand closer to your vehicle for the transmitter to work, try this:

- Check the distance. You may be too far from your vehicle. You may need to stand closer during rainy or snowy weather.
- Check the location. Other vehicles or objects may be blocking the signal. Take a few steps to the left or right, hold the transmitter higher, and try again.
- Check to determine if battery replacement is necessary. See “Battery Replacement” under *Remote Keyless Entry System Operation on page 2-4*.
- If you are still having trouble, see your dealer or a qualified technician for service.

Remote Keyless Entry System Operation

You can lock and unlock your doors and cargo area from about 3 feet (1 m) up to 30 feet (9 m) away using the remote keyless entry transmitter supplied with your vehicle.

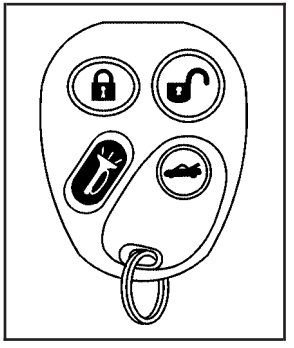

(Unlock): When you press unlock, the driver’s door will unlock automatically, the parking lamps may flash, the horn may sound, and the interior lights will turn on.

If your vehicle has the memory seat feature and you have previously programmed a seat position, the driver's seat will move to that position when you press the unlock button. See *Memory Seat on page 2-52* for more information.

(Lock): Press lock to lock all the doors. Press lock again within three seconds and the horn will chirp.

(Cargo Cover Release): To release the cargo cover, press the button with this symbol on it. The convertible top must be all the way up or down for this feature to work properly. The cargo cover can also be released using the cargo cover release button located in the glovebox. See *Cargo Cover on page 2-31* for more information.

(Remote Alarm): When the button with the horn symbol on the remote keyless entry transmitter is pressed, the horn will sound and the headlamps and taillamps will flash for up to 30 seconds. This can be turned off by pressing the horn button again, or by waiting for 30 seconds, or by starting the vehicle.

You can program different feedback settings for up to two drivers using the Driver Information Center (DIC). For more information see *Driver Information Center (DIC) on page 3-44*.

Matching Transmitter(s) to Your Vehicle

Each remote keyless entry transmitter is coded to prevent another transmitter from unlocking your vehicle. If a transmitter is lost or stolen, a replacement can be purchased through your dealer. Remember to bring any remaining transmitters with you when you go to your dealer. When the dealer matches the replacement transmitter to your vehicle, any remaining transmitters must also be matched. Once your dealer has coded the new transmitter, the lost transmitter will not unlock your vehicle. Each vehicle can have a maximum of four transmitters matched to it.

Battery Replacement

Under normal use, the battery in your remote keyless entry transmitter should last about two years.

You can tell the battery is weak if the transmitter won't work at the normal range in any location. If you have to get close to your vehicle before the transmitter works, it's probably time to change the battery.

The Driver Information Center (DIC) will display a RFA # BATTERY LOW message when the transmitter battery is low. See *DIC Warnings and Messages on page 3-48*.

Notice: **When replacing the battery, use care not to touch any of the circuitry. Static from your body transferred to these surfaces may damage the transmitter.**

To replace the battery in the remote keyless entry transmitter do the following:

1. Insert a thin coin in the slot between the covers of the transmitter housing. Gently pry the transmitter apart.
2. Remove and replace the battery with a three-volt CR2032 or equivalent battery.
3. Align the covers and snap them together.
4. Check the operation of the transmitter.

Doors and Locks

Door Locks

⚠ CAUTION:

Unlocked doors can be dangerous.

- **Passengers — especially children — can easily open the doors and fall out of a moving vehicle. When a door is locked, the handle will not open it. You increase the chance of being thrown out of the vehicle in a crash if the doors are not locked. So, wear safety belts properly and lock the doors whenever you drive.**
- **Young children who get into unlocked vehicles may be unable to get out. A child can be overcome by extreme heat and can suffer permanent injuries or even death from heat stroke. Always lock your vehicle whenever you leave it.**
- **Outsiders can easily enter through an unlocked door when you slow down or stop your vehicle. Locking your doors can help prevent this from happening.**

There are several ways to lock and unlock your vehicle.

From the outside, use your key or the remote keyless entry transmitter. See *Remote Keyless Entry System Operation on page 2-4* for more information.

To lock or unlock the driver's door from the outside with the key, insert the key and turn it toward the rear (lock) or toward the front (unlock) of the vehicle.

From the inside, use the manual or power door locks.

To lock or unlock either door from the inside, pull up or push down on the manual lock.

Power Door Locks

Your power door lock switch is located on the console switchbank. See *Center Console Switchbank on page 3-17* for more information.

(Unlock): Press this symbol to unlock the doors from inside your vehicle.

(Lock): Press this symbol to lock the doors from inside your vehicle.

Programmable Automatic Door Locks

Close the doors and turn on the ignition. If all the doors are closed, every time you move the shift lever out of PARK (P) all of the doors will lock. And, every time you stop and move the shift lever into PARK (P), the doors will unlock. If someone needs to get out while you're not in PARK (P), have that person use the manual or power lock. When the door is closed again, it will not lock automatically. Just use the manual or power lock to lock the door again. If you need to lock the doors before shifting out of PARK (P), just use the manual or power lock switch to lock the doors.

Customizing Your Automatic Door Locks Feature

The automatic door locks can be programmed to the preferred settings for up to two drivers. See *DIC Vehicle Personalization on page 3-55* for more information.

Leaving Your Vehicle

If you are leaving the vehicle, take your key, open your door and set the lock from inside. Then get out and close the door.

Tailgate

To open the tailgate, do the following:

1. Open the cargo cover using the remote keyless entry transmitter or the cargo cover release button in the glovebox. See *Remote Keyless Entry System Operation on page 2-4* and *Cargo Cover on page 2-31* for more information.
2. Pull up on the handle inside and lower the tailgate.

To close the tailgate, do the following:

1. Close the cargo cover before closing the tailgate.
2. Push the tailgate upward to return it to its upright, latched position. Push and pull on the tailgate to make sure it is secure.

Windows

⚠ CAUTION:

Leaving children, helpless adults, or pets in a vehicle with the windows closed is dangerous. They can be overcome by the extreme heat and suffer permanent injuries or even death from heat stroke. Never leave a child, a helpless adult, or a pet alone in a vehicle, especially with the windows closed in warm or hot weather.

Power Windows

The driver's and passenger's power window switches are located on the center console switchbank.

See *Center Console Switchbank on page 3-17* for more information on location.

When you open a door, the window will automatically lower about a half inch. When the door is closed, the window will then close. If you wish to re-open the window once it's closed, press and hold the bottom of the power window switch to lower the window. Press and hold the top of the switch with the up arrow to raise the window.

The ignition must be in ACCESSORY or RUN for the window switches to work.

Express Down Window

Both driver's and passenger's window switches have the express-down feature. Tap the driver's or passenger's power window switch and immediately release. The window will lower completely. To stop the express-down feature from lowering the window completely, simply tap the switch again or press the lock button on the remote keyless entry transmitter. See *Remote Keyless Entry System Operation on page 2-4* for more information.

To close the window, press and hold the up arrow.

Programming the Power Windows

If the battery on your vehicle has been recharged, disconnected, or is not working properly, you will need to reprogram the power windows for them to work properly. Before reprogramming, you will need to replace or recharge your vehicle's battery.

To program the windows, follow these steps:

1. With the ignition in ACCESSORY or RUN, close the doors.
2. Fully lower the windows using the driver's power window switches. Then raise the windows completely.

   The windows are now programmed.

Sun Visors

To block out glare, you can swing down the sun visors. You can also move them from side to side.

Lighted Visor Vanity Mirrors

Pull the visor down and lift the cover to expose the mirror. The light will automatically come on. The light will go out when you close the cover.

Theft-Deterrent Systems

Vehicle theft is big business, especially in some cities. Although your vehicle has a number of theft-deterrent features, we know that nothing we put on it can make it impossible to steal. However, there are ways you can help.

Content Theft-Deterrent

Your vehicle is equipped with a content theft-deterrent alarm system.

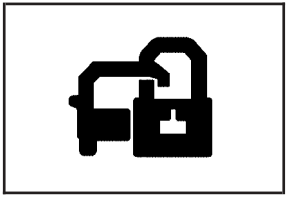

With this system, the security light will flash as you open the door (if your ignition is off).

This light reminds you to activate the theft-deterrent system. Here's how to do it:

1. Open the door.
2. Lock the door with the power door lock switch or the remote keyless entry transmitter. The security light should come on and stay on.
3. Close all doors. The security light should go off after approximately 30 seconds. The alarm is not armed until the security light goes off.

If a locked door is opened with the key, without the key, or without the remote keyless entry transmitter, the alarm will go off. The headlamps and parking lamps will flash for two minutes, and the horn will sound for 30 seconds, then will turn off to save the battery power. You can disable the alarm using the remote keyless entry transmitter or by putting the key in the ignition and starting the vehicle.

Remember, the theft-deterrent system won't activate if you lock the doors with a key or use the manual door lock. It activates only if you use a power door lock switch with the door open, or with the remote keyless entry transmitter. You should also remember that you can start your vehicle with the correct ignition key if the alarm has been set off.

Here's how to avoid setting off the alarm by accident:

- If you don't want to activate the theft-deterrent system, the vehicle should be locked with the door key *after* the doors are closed.
- Always unlock a door with a key, or use the remote keyless entry transmitter. Unlocking a door any other way will set off the alarm.

If you set off the alarm by accident, unlock any door with the key. You can also turn off the alarm by pressing unlock on the remote keyless entry transmitter. The alarm won't stop if you try to unlock a door any other way.

Testing the Alarm

The alarm can be tested by following these steps:

1. From inside the vehicle, lower the driver's window and open the driver's door.
2. Activate the system by locking the doors with the power door lock switch while the door is open, or with the remote keyless entry transmitter.
3. Get out of the vehicle, close the door and wait for the security light to go out.
4. Then reach in through the window, unlock the door with the manual door lock and open the door. This should set off the alarm.

When the alarm is set the power door unlock switch is not operational.

If the alarm does not sound when it should but the headlamps flash, check to see if the horn works. The horn fuse may be blown. To replace the fuse, see *Fuses and Circuit Breakers on page 5-84*.

If the alarm does not sound or the headlamps do not flash, the vehicle should be serviced by your dealer.

Passlock®

Your vehicle is equipped with the Passlock® theft-deterrent system.

Passlock® is a passive theft-deterrent system. Passlock® enables fuel if the ignition lock cylinder is turned with a valid key. If a correct key is not used or the ignition lock cylinder is tampered with, the fuel system is disabled and the vehicle will not start.

During normal operation, the security light will turn off approximately five seconds after the key is turned to RUN. See *Security Light on page 3-37*.

If the engine stalls and the security light flashes, wait about 10 minutes until the light stops flashing before trying to restart the engine. Remember to release the key from START as soon as the engine starts.

If the engine does not start after three tries, the vehicle needs service.

If the engine is running and the security light comes on, you will be able to restart the engine if you turn the engine off. However, your Passlock® system is not working properly and must be serviced by your dealer. Your vehicle is not protected by Passlock® at this time. You may also want to check the fuse. See *Fuses and Circuit Breakers on page 5-84*. See your dealer for service.

In an emergency, call the GM Roadside Assistance Center. See *Roadside Assistance Program on page 7-6*.

Starting and Operating Your Vehicle

New Vehicle Break-In

Notice: **Your vehicle does not need an elaborate "break-in." But it will perform better in the long run if you follow these guidelines:**

- **Keep your speed at 55 mph (88 km/h) or less for the first 500 miles (805 km).**
- **Do not drive at any one speed — fast or slow —for the first 500 miles (805 km). Do not make full-throttle starts.**
- **Avoid making hard stops for the first 200 miles (322 km) or so. During this time your new brake linings are not yet broken in. Hard stops with new linings can mean premature wear and earlier replacement. Follow this breaking-in guideline every time you get new brake linings.**
- **Do not tow a trailer during break-in. See *Towing a Trailer on page 4-39* for more information.**

Ignition Positions

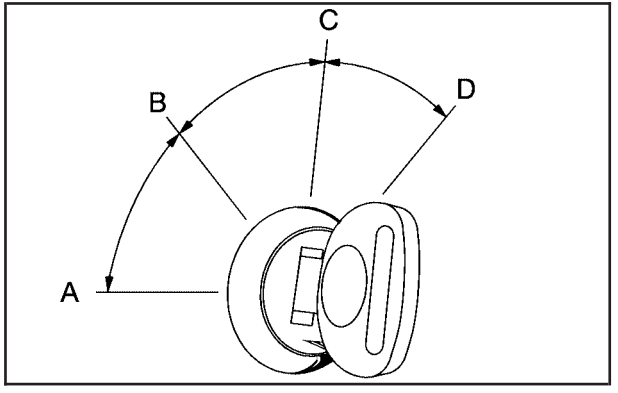

Use the key to turn the ignition switch to four different positions.

Notice: **If your key seems stuck in OFF and you can't turn it, be sure you are using the correct key; if so, is it all the way in? If it is, then turn the steering wheel left and right while you turn the key hard. Turn the key only with your hand. Using a tool to force it could break the key or the ignition switch. If none of these works, then your vehicle needs service.**

A (OFF): This is the only position in which you can insert or remove the key. This position locks the ignition, steering wheel and transmission. It's a theft-deterrent feature.

Notice: **Lengthy operation of features such as the radio in the accessory ignition position may drain the battery and prevent your vehicle from starting. Do not operate your vehicle in the accessory ignition position for a long period of time.**

B (ACCESSORY): This position lets you use things like the radio and the windshield wipers when the engine is off.

C (RUN): This is the position for driving.

D (START): This position starts the engine.

Starting Your Engine

Move your shift lever to PARK (P) or NEUTRAL (N). Your engine won't start in any other position — that's a safety feature. To restart when you're already moving, use NEUTRAL (N) only.

Notice: **Do not try to shift to PARK (P) if your vehicle is moving. If you do, you could damage the transmission. Shift to PARK (P) only when your vehicle is stopped.**

1. With your foot off the accelerator pedal, turn the ignition key to START. When the engine starts, let go of the key. The idle speed will go down as your engine gets warm.

Notice: **Holding your key in START for longer than 15 seconds at a time will cause your battery to be drained much sooner. And the excessive heat can damage your starter motor. At 15 seconds, the starter will automatically be disengaged. Wait about 15 seconds between each try to help avoid draining your battery or damaging your starter.**

2. If it doesn't start within 10 seconds, push the accelerator pedal all the way to the floor, while you hold the ignition key in START. When the engine starts, let go of the key and let up on the accelerator pedal. Wait about 15 seconds between each try.

When starting your engine in very cold weather (below 0°F or 18 °C), do this:

1. With your foot off the accelerator pedal, turn the ignition key to START and hold it there up to 15 seconds. When the engine starts, let go of the key.
2. If your engine still won't start (or starts but then stops), it could be flooded with too much gasoline. Try pushing your accelerator pedal all the way to the floor and holding it there as you hold the key in START for about three seconds. When the engine starts, let go of the key and accelerator. If the vehicle starts briefly but then stops again, do the same thing, but this time keep the pedal down for five or six seconds. This clears the extra gasoline from the engine.

Notice: **Your engine is designed to work with the electronics in your vehicle. If you add electrical parts or accessories, you could change the way the engine operates. Before adding electrical equipment, check with your dealer. If you do not, your engine might not perform properly.**

Automatic Transmission Operation

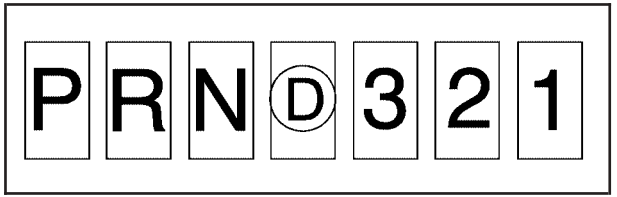

Your automatic transmission has a shift lever located on the center console.

There are several different positions for your shift lever.

PARK (P): This position locks your rear wheels. It's the best position to use when you start your engine because your vehicle can't move easily.

⚠ CAUTION:

It is dangerous to get out of your vehicle if the shift lever is not fully in PARK (P) with the parking brake firmly set. Your vehicle can roll.

Do not leave your vehicle when the engine is running unless you have to. If you have left the engine running, the vehicle can move suddenly. You or others could be injured.
To be sure your vehicle will not move, even when you are on fairly level ground, always set your parking brake and move the shift lever to PARK (P). See *Shifting Into Park (P) on page 2-19*. If you are pulling a trailer, see *Towing a Trailer on page 4-39*.

Ensure the shift lever is fully in PARK (P) before starting the engine. Your vehicle has an automatic transmission shift lock control system. You have to fully apply your regular brakes before you can shift from PARK (P) when the ignition key is in RUN. If you cannot shift out of PARK (P), ease pressure on the shift lever, and push the shift lever all the way into PARK (P) (press the button in on the console shift lever) as you maintain brake application. Then move the shift lever into the gear you wish. See *Shifting Out of Park (P) on page 2-20*.

REVERSE (R): Use this gear to back up.

Notice: **Shifting to REVERSE (R) while your vehicle is moving forward could damage the transmission. The repairs would not be covered by your warranty. Shift to REVERSE (R) only after your vehicle is stopped.**

To rock your vehicle back and forth to get out of snow, ice or sand without damaging your transmission, *see If You Are Stuck: In Sand, Mud, Ice or Snow on page 4-31*.

NEUTRAL (N): In this position, your engine doesn't connect with the wheels. To restart when you're already moving, use NEUTRAL (N) only.

⚠ CAUTION:

Shifting into a drive gear while your engine is running at high speed is dangerous. Unless your foot is firmly on the brake pedal, your vehicle could move very rapidly. You could lose control and hit people or objects. Do not shift into a drive gear while your engine is running at high speed.

Notice: **Shifting out of PARK (P) or NEUTRAL (N) with the engine running at high speed may damage the transmission. The repairs would not be covered by your warranty. Be sure the engine is not running at high speed when shifting your vehicle.**

DRIVE (D): This position is for normal driving. If you need more power for passing, and you're:

- Going less than about 35 mph (55 km/h), push your accelerator pedal about halfway down.
- Going about 35 mph (55 km/h) or more, push the accelerator all the way down.

You'll shift down to the next gear and have more power.

DRIVE (D) should not be used when towing a trailer, carrying a heavy load, driving on steep hills or for off-road driving. Select THIRD (3) when operating the vehicle under any of these conditions.

THIRD (3): This position is also used for normal driving, however, it offers more power and lower fuel economy than DRIVE (D).

SECOND (2): This position gives you more power but lower fuel economy than DRIVE (D) and THIRD (3). You can use SECOND (2) on hills. It can help control your speed as you go down steep mountain roads, but then you would also want to use your brakes off and on.

You can also use SECOND (2) for starting your vehicle from a stop on slippery road surfaces.

FIRST (1): This position gives you even more power but lower fuel economy than THIRD (3) and SECOND (2). You can use it on very steep hills, or in deep snow or mud. If the shift lever is put in FIRST (1) while the vehicle is moving forward, the transmission won't shift into first gear until the vehicle is going slowly enough.

Notice: **Spinning the tires or holding the vehicle in one place on a hill using only the accelerator pedal may damage the transmission. If you are stuck, do not spin the tires. When stopping on a hill, use the brakes to hold the vehicle in place.**

Parking Brake

To set the parking brake, hold the brake pedal down. Pull the parking brake lever up. If the ignition is on, the brake system warning light will come on. See *Brake System Warning Light on page 3-30* for more information.

To release the parking brake, hold the brake pedal down. Then push the release button in as you move the parking brake lever all the way down.

Notice: **Driving with the parking brake on can overheat the brake system and cause premature wear or damage to brake system parts. Verify that the parking brake is fully released and the brake warning light is off before driving.**

Shifting Into Park (P)

⚠ CAUTION:

It can be dangerous to get out of your vehicle if the shift lever is not fully in PARK (P) with the parking brake firmly set. Your vehicle can roll. Do not leave your vehicle when the engine is running unless you have to. If you have left the engine running, the vehicle can move suddenly. You or others could be injured.
To be sure your vehicle will not move, even when you are on fairly level ground, always set your parking brake and move the shift lever to PARK (P).

1. Hold the brake pedal down with your right foot and set the parking brake. See *Parking Brake on page 2-18* for more information.

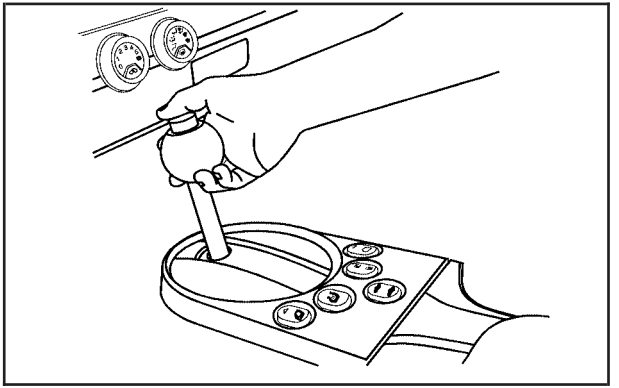

2. Move the shift lever into PARK (P) by pressing the button on the lever while pushing the lever all the way toward the front of the vehicle.
3. Turn the ignition key to OFF.
4. Remove the key and take it with you. If you can remove the key from the ignition, the vehicle is in PARK (P).

Leaving Your Vehicle With the Engine Running

⚠ CAUTION:

It can be dangerous to leave your vehicle with the engine running. Your vehicle could move suddenly if the shift lever is not fully in PARK (P) with the parking brake firmly set. And, if you leave the vehicle with the engine running, it could overheat and even catch fire. You or others could be injured. Do not leave your vehicle with the engine running.

If you have to leave your vehicle with the engine running, be sure your vehicle is in PARK (P) and your parking brake is firmly set before you leave it. After you've moved the shift lever into PARK (P), hold down the regular brake pedal. See if you can move the shift lever away from PARK (P) without first pulling it toward you. If you can, it means that the shift lever wasn't fully locked into PARK (P).

Torque Lock

If you are parking on a hill and you don't shift your transmission into PARK (P) properly, the weight of the vehicle may put too much force on the parking pawl in the transmission. You may find it difficult to pull the shift lever out of PARK (P). This is called "torque lock." To prevent torque lock, set the parking brake and then shift into PARK (P) properly before you leave the driver's seat. To find out how, see "Shifting Into PARK (P)" listed previously in this section.

When you are ready to drive, move the shift lever out of PARK (P) *before* you release the parking brake.

Shifting Out of Park (P)

Your vehicle has an automatic transmission shift lock control system You have to fully apply your regular brake before you can shift from PARK (P) when the ignition is in RUN. See *Automatic Transmission Operation on page 2-16*.

If you cannot shift out of PARK (P), ease pressure on the shift lever, push the shift lever all the way into PARK (P), and release the shift lever button as you maintain brake application. Then press the shift lever button and move the shift lever into the gear you wish.

Parking Over Things That Burn

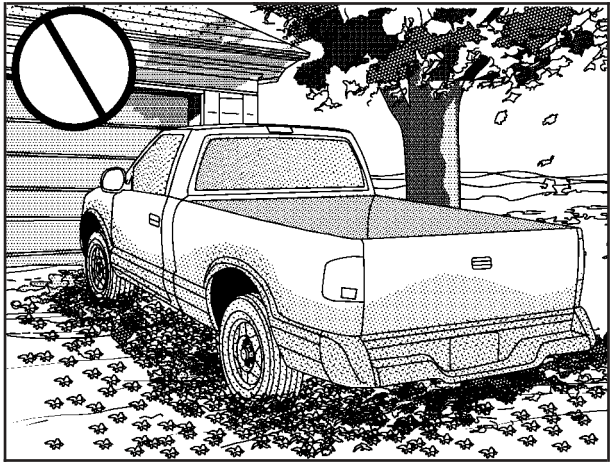

⚠ CAUTION:

Things that can burn could touch hot exhaust parts under your vehicle and ignite. Do not park over papers, leaves, dry grass or other things that can burn.

Engine Exhaust

⚠ CAUTION:

Engine exhaust can kill. It contains the gas carbon monoxide (CO), which you can not see or smell. It can cause unconsciousness and death.

You might have exhaust coming in if:

- **Your exhaust system sounds strange or different.**
- **Your vehicle gets rusty underneath.**
- **Your vehicle was damaged in a collision.**
- **Your vehicle was damaged when driving over high points on the road or over road debris.**
- **Repairs were not done correctly.**
- **Your vehicle or exhaust system had been modified improperly.**

If you ever suspect exhaust is coming into your vehicle:

- **Drive it only with all the windows down to blow out any CO; and**
- **Have your vehicle fixed immediately.**

Running Your Engine While You Are Parked

It is better not to park with the engine running. But if you ever have to, here are some things to know.

⚠ CAUTION:

Idling the engine with the climate control system off could allow dangerous exhaust into your vehicle. See the earlier Caution under *Engine Exhaust on page 2-21*.

Also, idling in a closed-in place can let deadly carbon monoxide (CO) into your vehicle even if the climate control fan is at the highest setting. One place this can happen is a garage. Exhaust — with CO — can come in easily. NEVER park in a garage with the engine running.

Another closed-in place can be a blizzard. See *Winter Driving on page 4-26*.

⚠ CAUTION:

It can be dangerous to get out of your vehicle if the shift lever is not fully in PARK (P) with the parking brake firmly set. Your vehicle can roll. Do not leave your vehicle when the engine is running unless you have to. If you have left the engine running, the vehicle can move suddenly. You or others could be injured.
To be sure your vehicle will not move, even when you are on fairly level ground, always set your parking brake and move the shift lever to PARK (P).

Follow the proper steps to be sure your vehicle will not move. See *Shifting Into Park (P) on page 2-19*.

If you are pulling a trailer, see *Towing a Trailer on page 4-39*.

Mirrors

Manual Rearview Mirror

Your vehicle may have a manual rearview mirror. You can adjust the mirror for day or night driving. Press the tab forward, or away from you, for day driving. Pull the tab back, or toward you, for night driving.

Automatic Dimming Rearview Mirror with HomeLink®

Your vehicle may have an automatic dimming rearview mirror with map lamps. The mirror also has HomeLink® Transmitter buttons. For more information about this feature, see *HomeLink® Transmitter on page 2-26*.

Mirror Operation

The mirror automatically changes to reduce glare from headlamps behind you. A time delay feature prevents rapid changing from the day to night positions while driving under lights and through traffic.

(On/Off): The automatic dimming feature is automatically activated when the vehicle is started. The automatic dimming feature is turned on or off by pressing this button located on the lower part of the mirror. Press and hold the button for up to three seconds to turn this feature on or off.

(Indicator Light): This light will turn on when the automatic dimming feature is active.

(Map Lamps): Press this button to turn the map lamps on and off.

Cleaning the Mirror

When cleaning the mirror, use a paper towel or similar material dampened with glass cleaner. Do not spray glass cleaner directly on the mirror housing.

Outside Power Heated Mirrors

Your vehicle has outside heated power mirrors.

The power mirror control is located on the driver's door.

To adjust the power mirrors, do the following:

1. Turn the knob toward the mirror you desire to adjust.
2. Move the knob in the direction you want the mirror to go.
3. Return the knob to the center position once the mirrors are adjusted.

If you reach the mirror's end of the travel position in any direction, the mirror will enter a ratcheting mode. This action is harmless. To stop this action, back the mirror up by moving the knob in the opposite direction.

Both mirrors are also heated when you activate the rear window defogger. See "Rear Window Defogger" under *Climate Control System on page 3-19* for more information.

The mirrors can be manually folded inward to prevent damage when going through an automatic car wash. To fold, push the mirror toward the vehicle. To return the mirror to its original position, push outward. Be sure to return the mirrors to their original unfolded position before driving.

Outside Convex Mirror

A convex mirror's surface is curved so you can see more from the driver's seat.

⚠ CAUTION:

A convex mirror can make things (like other vehicles) look farther away than they really are. If you cut too sharply into the right lane, you could hit a vehicle on your right. Check your inside mirror or glance over your shoulder before changing lanes.

Outside Automatic Dimming Heated Mirror

If you have this feature, the driver's side outside rearview mirror will adjust for the glare of headlamps behind you. This feature is controlled using the on and off settings on the automatic dimming rearview mirror. See *Automatic Dimming Rearview Mirror with HomeLink® on page 2-23* for more information.

Both outside mirrors are also heated when you activate the rear window defogger. See "Rear Window Defogger" under *Climate Control System on page 3-19*.

The mirrors can be manually folded inward to prevent damage when going through an automatic car wash. To fold, push the mirror toward the vehicle. To return the mirror to its original position, push outward. Be sure to return the mirrors to their original unfolded position before driving.

HomeLink® Transmitter

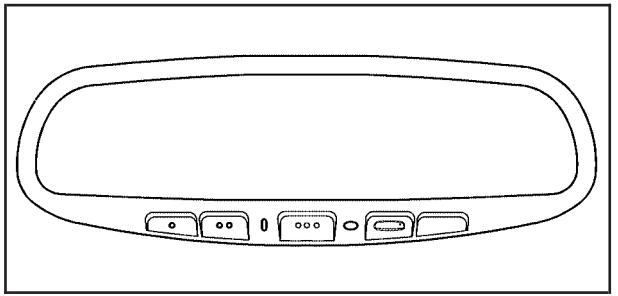

HomeLink®, a combined universal transmitter and receiver, provides a way to replace up to three hand–held transmitters used to activate devices such as gate operators, garage door openers, entry door locks, security systems and home lighting. Additional HomeLink® information can be found on the internet at www.homelink.com or by calling 1-800-355-3515.

If your vehicle is equipped with the HomeLink® Transmitter, it complies with Part 15 of the FCC Rules. Operation is subject to the following two conditions: (1) this device may not cause harmful interference, and (2) this device must accept any interference received, including interference that may cause undesired operation.

This device complies with RSS-210 of Industry Canada. Operation is subject to the following two conditions: (1) this device may not cause interference, and (2) this device must accept any interference received, including interference that may cause undesired operation of the device.

Changes and modifications to this system by other than an authorized service facility could void authorization to use this equipment.

Programming the HomeLink® Transmitter

Do not use the HomeLink® Transmitter with any garage door opener that does not have the “stop and reverse” feature. This includes any garage door opener model manufactured before April 1, 1982. If you have a newer garage door opener with rolling codes, please be sure to follow steps 6 through 8 to complete the programming of your HomeLink® Transmitter.

Read the instructions completely before attempting to program the HomeLink® Transmitter. Because of the steps involved, it may be helpful to have another person available to assist you in programming the transmitter.

Keep the original transmitter for use in other vehicles as well as for future HomeLink® programming. It is also recommended that upon the sale of the vehicle, the programmed HomeLink® buttons should be erased for security purposes. Refer to “Erasing HomeLink® Buttons” or, for assistance, contact HomeLink® on the internet at: www.homelink.com or by calling 1-800-355-3515.

Be sure that people and objects are clear of the garage door or gate operator you are programming. When programming a garage door, it is advised to park outside of the garage.

It is recommended that a new battery be installed in your hand-held transmitter for quicker and more accurate transmission of the radio frequency.

Your vehicle’s engine should be turned off while programming the transmitter. Follow these steps to program up to three channels:

1. Press and hold down the two outside buttons, releasing only when the indicator light begins to flash, after 20 seconds. Do not hold down the buttons for longer than 30 seconds and do not repeat this step to program a second and/or third transmitter to the remaining two HomeLink® buttons.
2. Position the end of your hand-held transmitter about 1 to 3 inches (3 to 8 cm) away from the HomeLink® buttons while keeping the indicator light in view.
3. Simultaneously press and hold both the desired button on HomeLink® and the hand-held transmitter button. Do not release the buttons until Step 4 has been completed.

   Some entry gates and garage door openers may require you to substitute Step 3 with the procedure noted in “Gate Operator and Canadian Programming” later in this section.
4. The indicator light will flash slowly at first and then rapidly after HomeLink® successfully receives the frequency signal from the hand-held transmitter. Release both buttons.

5. Press and hold the newly-trained HomeLink® button and observe the indicator light.

   If the indicator light stays on constantly, programming is complete and your device should activate when the HomeLink® button is pressed and released.

   To program the remaining two HomeLink® buttons, begin with Step 2 under “Programming HomeLink®.” Do not repeat Step 1 as this will erase all of the programmed channels.

   If the indicator light blinks rapidly for two seconds and then turns to a constant light, continue with Steps 6 through 8 following to complete the programming of a rolling-code equipped device (most commonly, a garage door opener).

6. Locate in the garage, the garage door opener receiver (motor-head unit). Locate the “Learn” or “Smart” button. This can usually be found where the hanging antenna wire is attached to the motor-head unit.

7. Firmly press and release the “Learn” or “Smart” button. The name and color of the button may vary by manufacturer.

   You will have 30 seconds to start Step 8.

8. Return to the vehicle. Firmly press and hold the programmed HomeLink® button for two seconds, then release. Repeat the press/hold/release sequence a second time, and depending on the brand of the garage door opener (or other rolling code device), repeat this sequence a third time to complete the programming.

   HomeLink® should now activate your rolling-code equipped device.

To program the remaining two HomeLink® buttons, begin with Step 2 of “Programming HomeLink®.” Do not repeat Step 1.

Gate Operator and Canadian Programming

Canadian radio-frequency laws require transmitter signals to “time out” or quit after several seconds of transmission. This may not be long enough for HomeLink® to pick up the signal during programming. Similarly, some U.S. gate operators are manufactured to “time out” in the same manner.

If you live in Canada, or you are having difficulty programming a gate operator by using the “Programming HomeLink®” procedures (regardless of where you live), replace Step 3 under “Programming HomeLink®” with the following:

Continue to press and hold the HomeLink® button while you press and release every two seconds (cycle) your hand-held transmitter until the frequency signal has been successfully accepted by HomeLink®. The indicator light will flash slowly at first and then rapidly. Proceed with Step 4 under “Programming HomeLink®” to complete.

Using HomeLink®

Press and hold the appropriate HomeLink® button for at least half of a second. The indicator light will come on while the signal is being transmitted.

Erasing HomeLink® Buttons

To erase programming from the three buttons do the following:

1. Press and hold down the two outside buttons until the indicator light begins to flash, after 20 seconds.
2. Release both buttons. Do not hold for longer than 30 seconds.

HomeLink® is now in the train (learning) mode and can be programmed at any time beginning with Step 2 under “Programming HomeLink®.”

Individual buttons can not be erased, but they can be reprogrammed. See “Reprogramming a Single HomeLink® Button” next.

Reprogramming a Single HomeLink® Button

To program a device to HomeLink® using a HomeLink® button previously trained, follow these steps:

1. Press and hold the desired HomeLink® button. Do not release the button.
2. The indicator light will begin to flash after 20 seconds. While still holding the HomeLink® button, proceed with Step 2 under “Programming HomeLink®.”

Resetting Defaults

To reset HomeLink® to default settings do the following:

1. Hold down the two outside buttons for about 20 seconds until the indicator light begins to flash.
2. Continue to hold both buttons until the HomeLink® indicator light turns off.
3. Release both buttons.

For questions or comments, contact HomeLink® at 1-800-355-3515, or on the internet at www.homelink.com.

Storage Areas

Glove Box

To open the glove box, pull on the lever. Use your door key to lock or unlock it.

Cupholder(s)

Your vehicle has one cupholder located on your instrument panel and one cupholder that is removable and snaps to the passenger's side of the center console in the bracket provided.

To open the cupholder on the instrument panel, push in the center of the cupholder door. The cupholder will then release and move outward toward you for use. To return the cupholder to its closed position, push in the center of the cupholder door near the top. If you press in the center middle of the cupholder door, the cupholder will not close properly.

Instrument Panel Storage Area

There is a storage tray located to the right of the steering wheel on the instrument panel. Press on the tray to release it. The tray will slide out of the instrument panel toward you. You can then put small items into the tray. To close the tray, push forward on the center of the tray until it latches back into the instrument panel.

Center Console Storage Area

Your center console has a storage area that can be locked and unlocked with the center console storage key. See *Keys on page 2-2* for more information.

Map Pocket

The map/storage pockets are located on both the driver and passenger side doors.

Cargo Cover

Opening the Cargo Cover

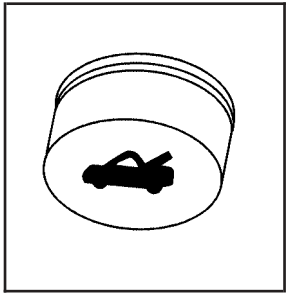

Press this button located in the glovebox to release the cargo cover.

You can also open the cargo cover using the remote keyless entry transmitter. See *Remote Keyless Entry System Operation on page 2-4* for more information. The tailgate must be open for you to close the cargo cover. See *Tailgate on page 2-8* for more information.

If you cannot open your cargo cover area using your remote keyless entry transmitter you should first check the battery. See “Battery Replacement” under *Remote Keyless Entry System Operation on page 2-4*. If changing the battery does not work, you may need to replace the fuse. See *Fuses and Circuit Breakers on page 5-84* for more information.

To open your cargo cover area manually, do the following:

1. Locate the control box under the rear of the vehicle on the driver’s side, behind the rear tire.

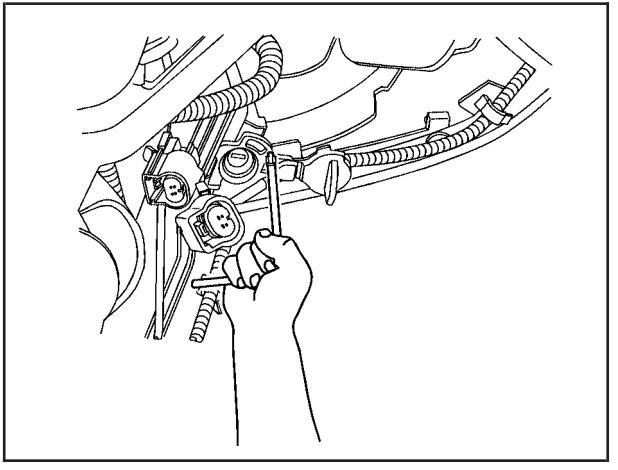

Convertible top release tool shown

2. Insert the convertible top release tool and turn it to activate the emergency release. The convertible top release tool is provided by the dealer and stored in the glovebox.

Removing the Cargo Cover

Your vehicle's cargo cover can be removed. You will need more than one person to remove the cargo cover.

1. Open the tailgate. See *Tailgate on page 2-8* for instructions.

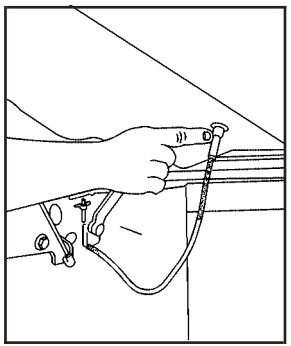

2. Disconnect the electrical connector located on the underside of the cargo cover near the front of the bed.

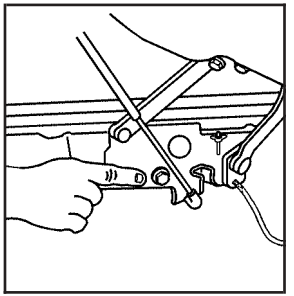

3. Locate and remove the bolts that hold the cargo cover in place. There is one bolt on each side near the front of the cargo area.

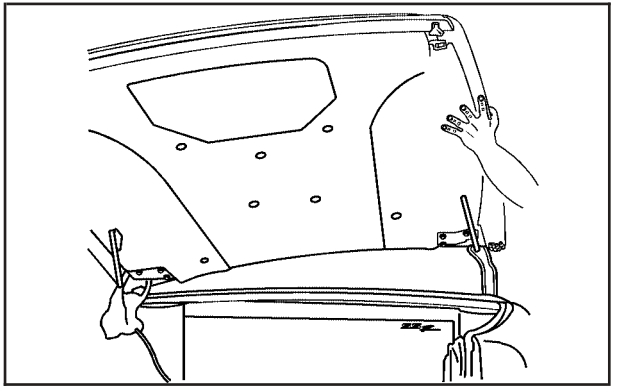

4. Slide the cover rearward and then lift up on the passenger's side of the cargo cover. Then have another person lift the driver's side of the cargo cover.
5. Reverse Steps 1 through 4 to reinstall the cargo cover.

Emergency Cargo Cover Release Handle

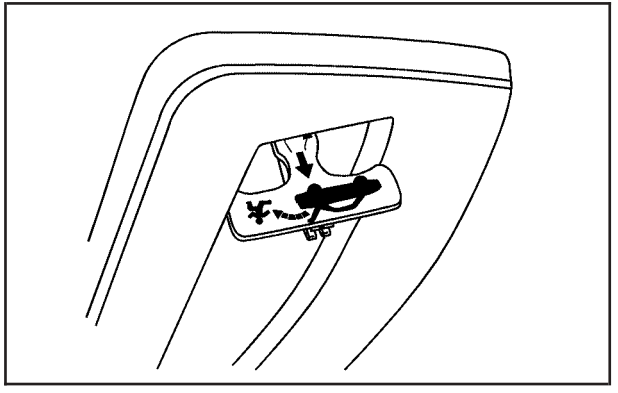

Notice: **Using the emergency cargo cover release handle as a tie-down or anchor point when securing items in the cargo area may damage it. Use the emergency cargo cover release handle only to help you open the cargo cover.**

Your vehicle has a glow-in-the-dark emergency cargo cover release handle located in the cargo area on the driver's side of the vehicle. This handle will glow following exposure to light. Pull the release handle up to open the cargo cover from the inside.

Cargo Tie Downs

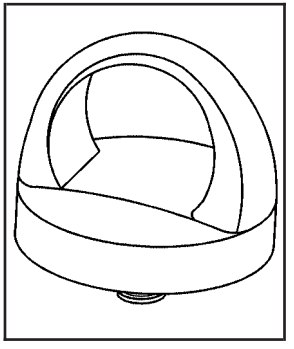

There are four cargo tie downs in the rear cargo area.

Use the cargo tie downs to secure cargo in the cargo storage area.

Floor Tracks

Your vehicle has floor tracks and side rails that can be used to install accessories in the cargo area of your vehicle. The floor tracks have covers that can be removed so that available accessories can be installed. For more information on available accessories for your vehicle, see your dealer.

To install or remove the floor track covers, follow these steps:

1. Open the tailgate. See *Tailgate on page 2-8*.

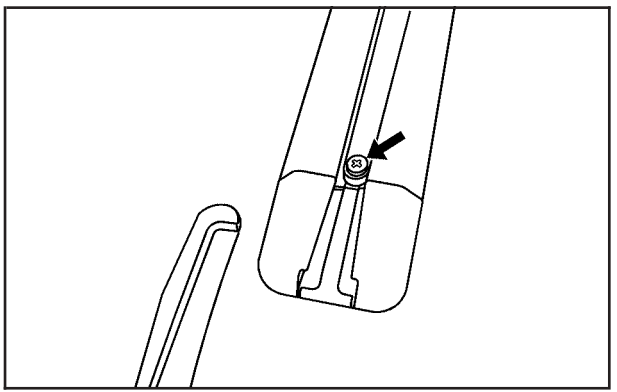

2. Locate and remove the fastener at the tailgate end of the floor track.

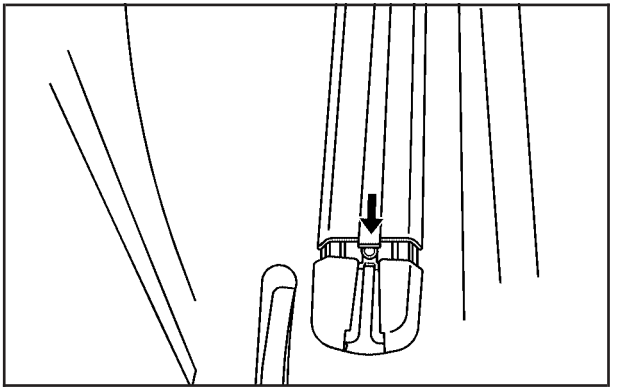

3. Slide the endcap rearward to remove it.

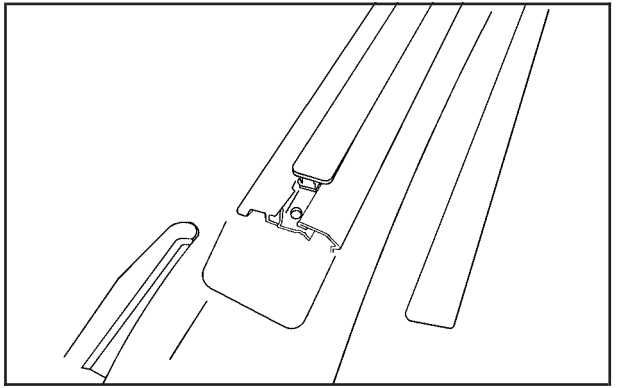

4. Insert the cover into the floor track and slide it all the way forward.
5. Reinstall the floor track fastener and endcap by reversing Steps 2 and 3.
6. Slide the floor track cover rearward until it rests against the endcap.
7. Repeat the above steps to install a cover for the other floor track.

To remove the floor track covers, reverse the installation procedure.

Additional cargo strips are installed by attaching them to the Velcro® strips located in the carpeted cargo area.

Cargo Net System

Your vehicle may have a cargo net system that attaches to the side rails and tailgate to help keep items in your cargo area from moving around.

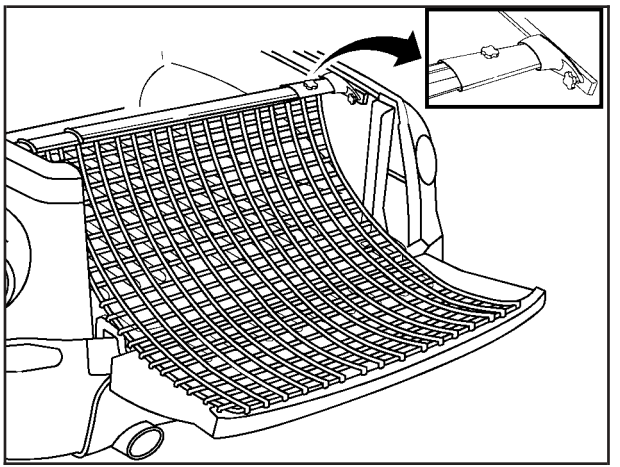

To install the cargo net system, do the following:

1. If your vehicle has the side-saddle storage bins installed, remove the bins before installing the cargo net. See *Side-Saddle Storage on page 2-41* for instructions. Once the cargo net system has been installed, the side-saddle storage bins can be reinstalled.

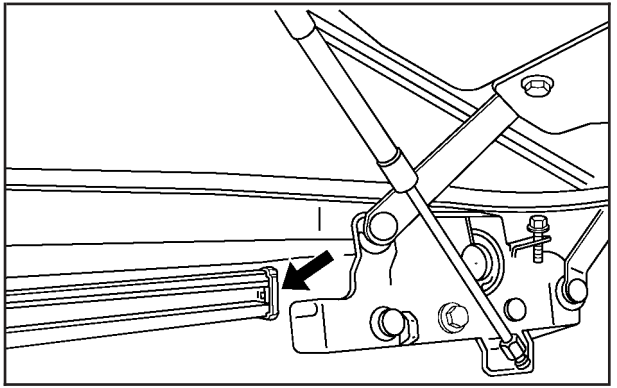

2. Locate and remove the endcaps from the forward ends of the cargo area side rails.

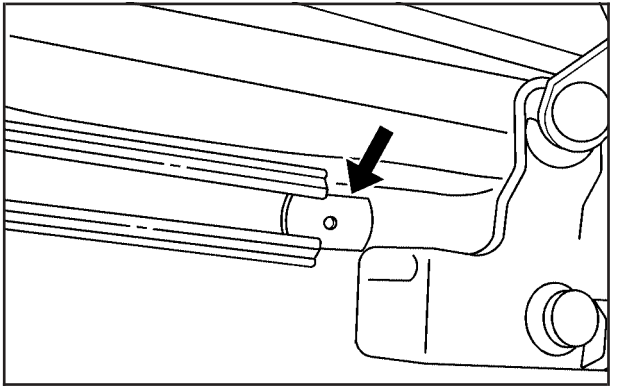

3. Insert a locking tab into the forward end of each side rail and slide the tabs rearward. Then reinstall the endcaps on the forward ends of the side rails.

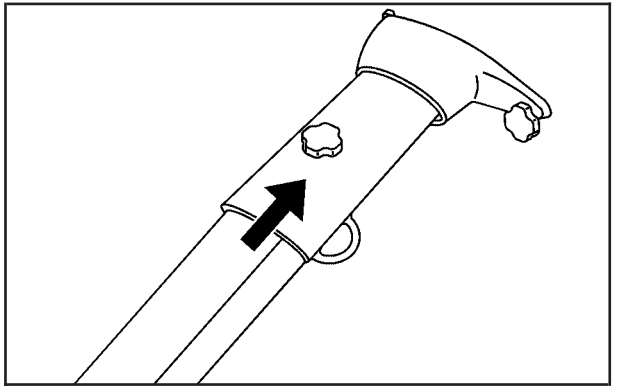

4. Loosen the knobs located on top of the telescoping cross bar by turning them counterclockwise.

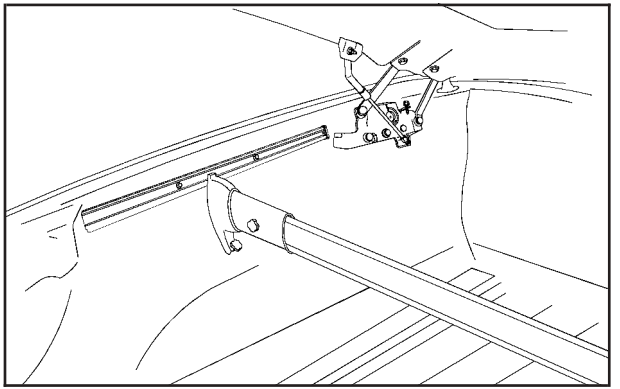

5. Position the cross bar vertically between the side rails as shown.

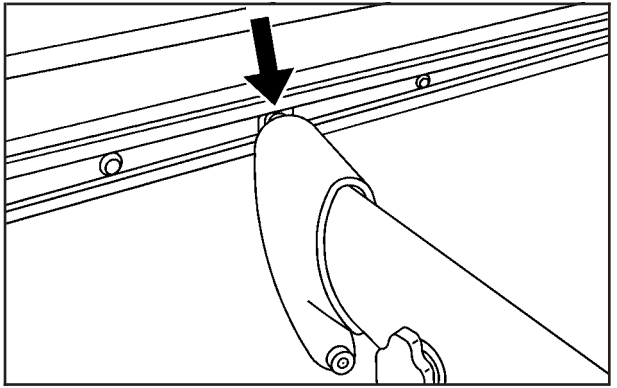

6. Insert the tabs located at each end of the cross bar into the side rails.

   You may need to adjust the length of the cross bar to make it fit between the side rails.

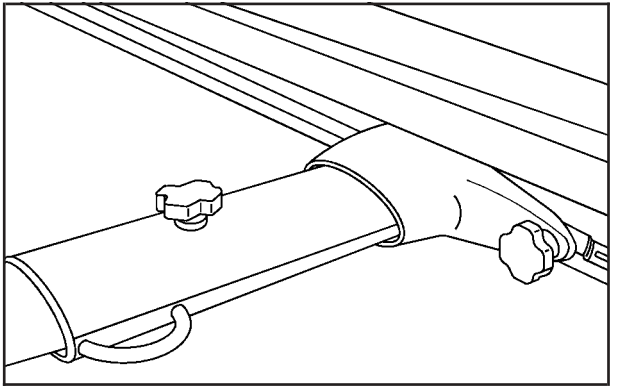

7. Turn the cross bar so that it is horizontal as shown.

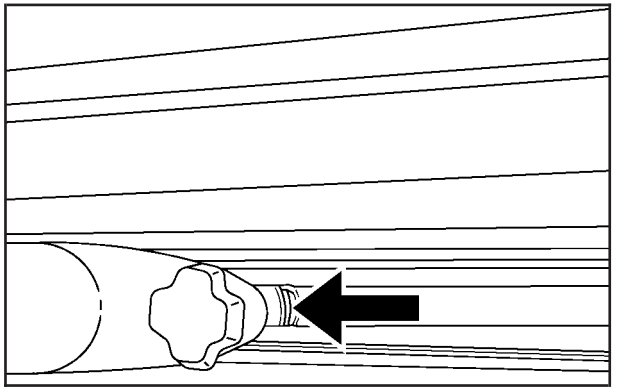

8. Slide the locking tabs in the side rails until they are aligned with the knobs on the cross bar as shown and loosely tighten the knobs.
9. Slide the cross bar to the desired location and adjust the length of the bar as necessary.
10. Tighten all the cross bar knobs.
11. Remove the pushpins located on the outboard sides of the tailgate near the top.
12. Install and tighten a D-ring into each hole on the tailgate.

    Be sure to use the D-rings supplied with the cargo net system that have 0.9 inches (22 mm) studs. Using other D-rings will not work because the studs will not be the correct length and the cargo net system will not be secured properly.
13. Clip the cargo net to the tailgate D-rings with the label facing up and on the driver's side of the vehicle.

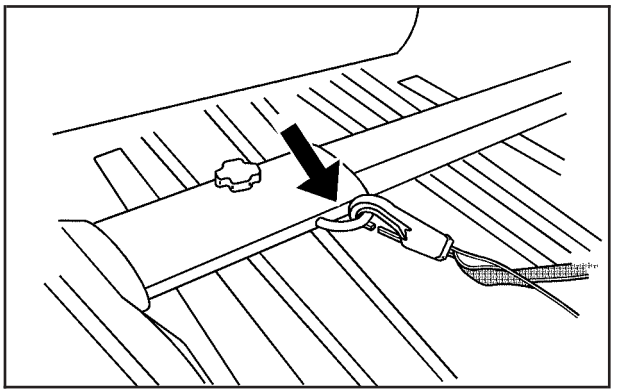

14. Clip the other end of the cargo net to the telescoping cross bar as shown.

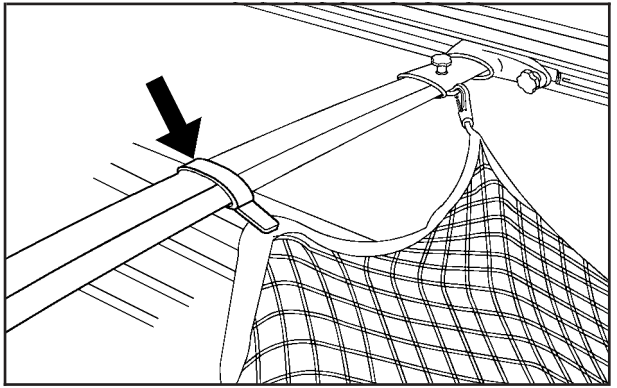

15. Wrap the Velcro® strap around the cross bar as shown to secure the middle portion of the cargo net.

Notice: **Loading items that weigh more than 75 lbs. (34 kg) in the cargo net could cause damage to the cargo net and/or your vehicle. Do not load heavy items in the cargo net.**

Be sure to load items in the cargo area according to the proper load limits. See *Loading Your Vehicle on page 4-32* for more information.

The cargo net system can be removed by reversing the installation procedure.

Side-Saddle Storage

Your vehicle may have a side-saddle storage system to store items on either side of the rear cargo area.

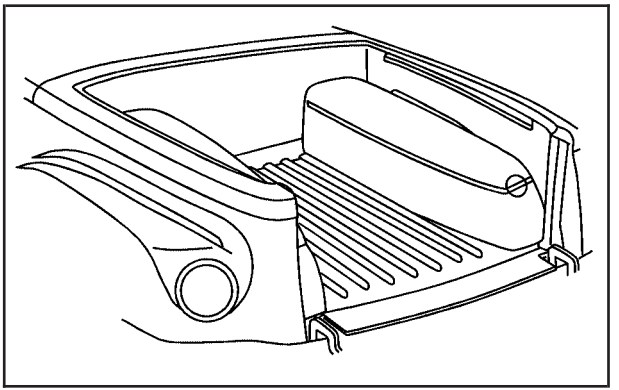

The side-saddle storage system is attached to the tracks on the floor and side rails of the cargo area and is removable.

To install the side-saddle storage bins, do the following:

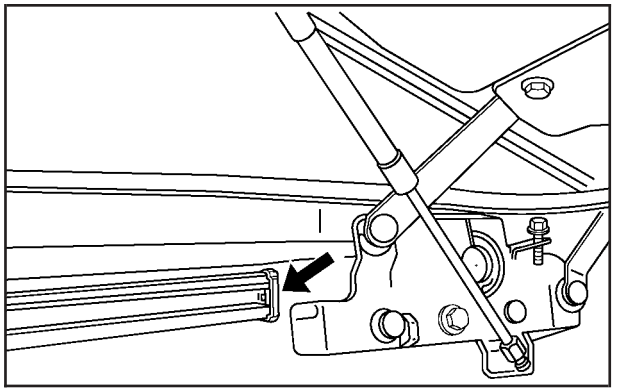

1. Locate and remove the endcap on the side rail near the forward end of the cargo area.

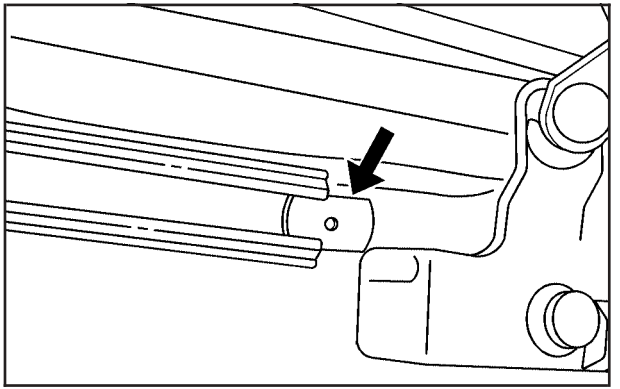

2. Insert a locking tab into the forward end of the side rail and slide the tab rearward. Then reinstall the endcap on the forward end of the side rail.
3. If your vehicle has the floor track covers installed, they must first be removed before continuing the installation of the side-saddle storage bins. See *Floor Tracks on page 2-35* for instructions.

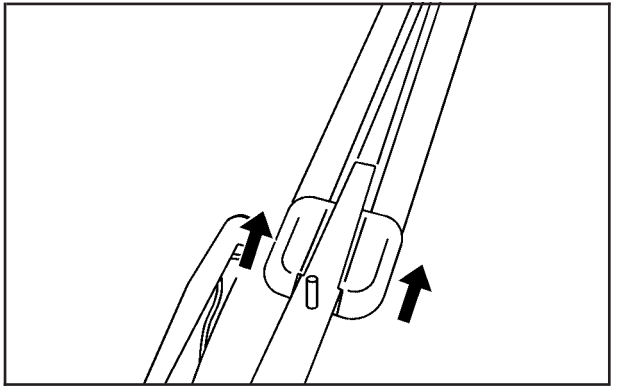

4. Prepare to insert a tapping plate into the floor track by locating the end of the plate that has the shortest distance between the end of the plate and the first stud. The distance will measure approximately 3.9 inches (100 mm).

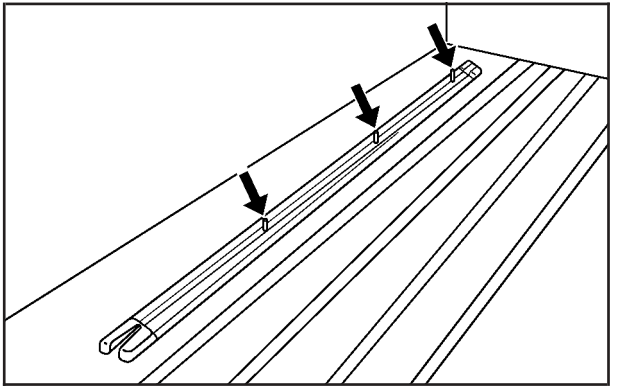

5. Insert a tapping plate into the tailgate end of the floor track and slide it forward, making sure that the three studs on the plate are facing upward.

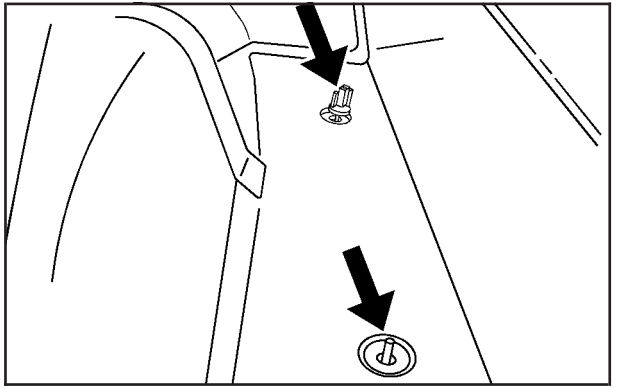

6. Place one of the side-saddle storage bins on the floor track so that the studs on the tapping plate line up with the holes in the bottom of the bin.

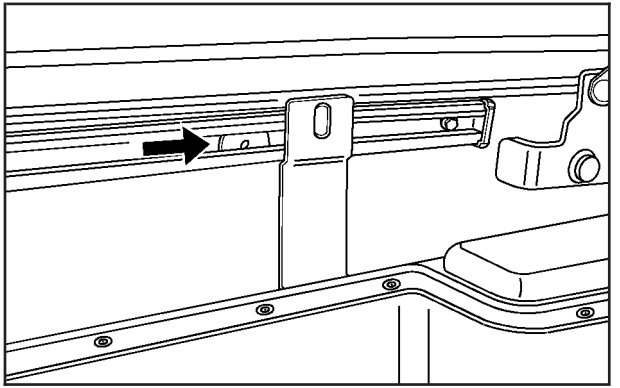

7. Slide the locking tab forward in the side rail until the hole in the middle lines up with the metal bracket on the side-saddle storage bin.

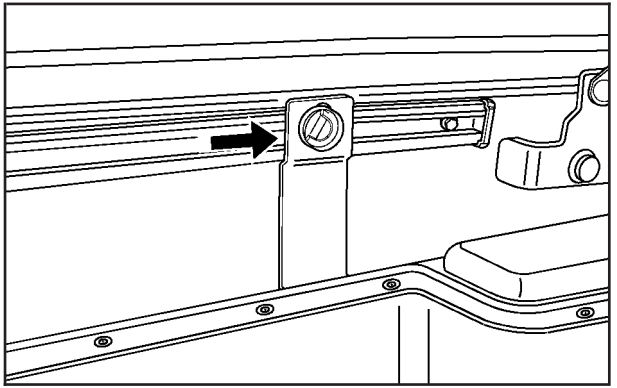

8. Insert one of the D-rings through the bracket and locking plate and loosely tighten it to the side rail.

   Be sure to use the D-rings supplied with the side-saddle storage system that have 0.3 inches (8 mm) studs. Using other D-rings will not work because the studs will be too long and the storage bins will not be secured properly. If you need additional D-rings and locking tabs, contact your dealer.

9. Loosely install the three wing nuts on the studs in the bottom of the storage bin.

10. Once the bin has been situated properly, fully tighten the three wing nuts in the bottom of the bin and the D-ring on the side rail.

11. Install the locking lid on the storage bin.

    Each storage bin is delivered with two keys. If additional keys are needed, your dealer can create them using the key code imprinted on each key.

12. Repeat the above steps to install the other storage bin.

To remove the storage bin(s), reverse the previous steps.

Be sure to load items in the cargo area according to the proper load limits. See *Loading Your Vehicle on page 4-32* for more information.

Convertible Top

Roof Tonneau

Your vehicle has a roof tonneau that is raised or lowered along with the convertible top using the convertible top switch located on the center console switchbank. See “Convertible Top Operation” following in this section for more information.

If you are unable to raise or lower your roof tonneau using the convertible top switch, verify that the cargo cover is closed. The roof tonneau will not raise or lower if the cargo cover is open. See *Cargo Cover on page 2-31* and for more information. There will also be a message displayed on the on the Driver Information Center (DIC). See *DIC Warnings and Messages on page 3-48* for more information on possible DIC messages and how to clear them from the display.

If the cargo area is closed and you still cannot operate the roof tonneau, check to see if a fuse is blown. See *Fuses and Circuit Breakers on page 5-84* for more information.

Contact your dealer if you are still unable to operate the roof tonneau.

You may need to raise the roof tonneau manually in the event of a power loss. See “Convertible Top Operation” for instructions.

Convertible Top Operation

Notice: **If you operate the convertible top switch continuously while the ignition is in ACCESSORY, the battery will drain and you might not be able to start your vehicle. Do not use the convertible top switch for extended periods of time when the ignition is in ACCESSORY.**

The ignition must be in RUN or ACCESSORY and your foot must be on the brake in order to raise or lower the convertible top. The cargo cover must also be closed for the convertible top to work properly.

Operate the convertible top by pressing the convertible top switch located on the console switchback. See *Center Console Switchbank on page 3-17* for more information on location.

⚠ CAUTION:

Moving parts of the convertible top can be dangerous. People can be injured by the convertible top and its mechanism. Keep people away from your vehicle when you are lowering or raising the top.

(Top Open): Press and hold this symbol on the convertible top switch to open the convertible top. The windows will lower automatically when the top begins to lower. Two chimes will sound when the convertible top is fully opened.

(Top Closed): Press and hold this symbol on the convertible top switch to close the convertible top. Two chimes will sound when the top is fully closed.

If you cannot raise or lower the convertible top by using your convertible top switch, you may need to replace the fuse. See *Fuses and Circuit Breakers on page 5-84* for more information.

If you still cannot operate your convertible top, contact your dealer.

You may need to raise the roof tonneau and convertible top manually in the event of a power loss. You will need two people to lift the roof tonneau and convertible top when using the following procedure. To manually raise the roof tonneau and convertible top, do the following:

1. Turn the ignition to OFF.
2. Be sure the cargo cover is closed. See *Cargo Cover on page 2-31* and *Remote Keyless Entry System Operation on page 2-4* for more information.
3. Open both doors.
4. In the area behind the seats, locate the two sets of cables behind the carpet flaps. The cables on the driver's side of the vehicle are located behind the tire inflator kit. The tire inflator kit must be removed to access the cables. See *Tire Inflator Kit on page 5-67* for instructions on how to remove the tire inflator kit.

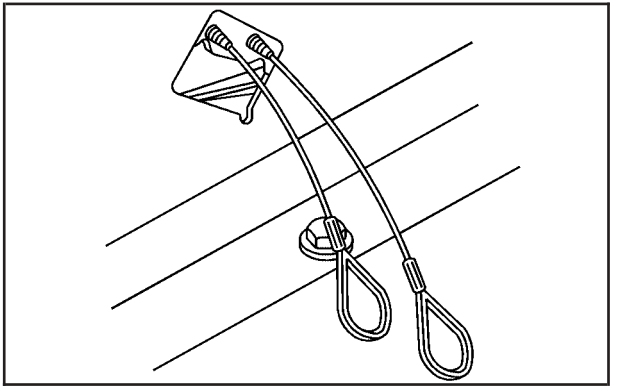

5. Locate the loops at the ends of the cables. One has a red band on it, and the other has a green band.

   The cable with the green band opens the tonneau latch, and the cable with the red band closes it.
6. Using the release tool from the convertible top, hook the tool into the green loop.

   The convertible top release tool is provided when you purchase your new SSR from the dealer. It is stored in the glovebox.

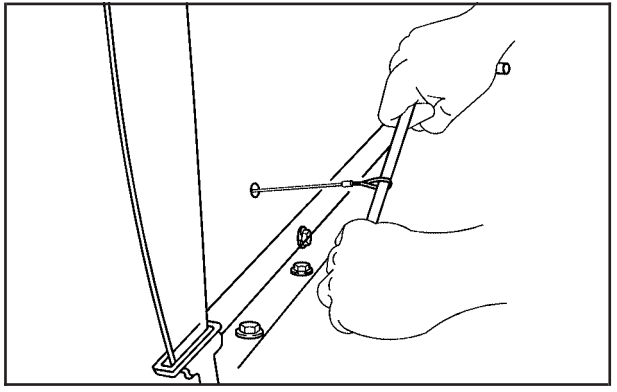

7. Pull the green cable with the release tool upward at a 45 degree angle until the cable is pulled tight and the roof tonneau latch is released.
8. Repeat Steps 4 through 7 on the other side of the vehicle.
9. You will know the latches have been released when the roof tonneau can be raised. If you cannot raise the roof tonneau, repeat Steps 4 through 7 on both sides of the vehicle until the roof tonneau can be raised.

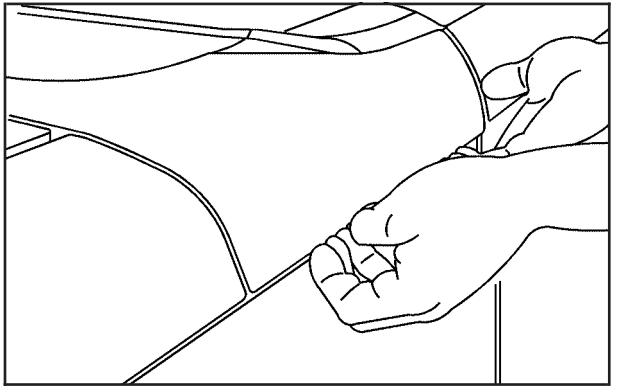

10. Lift up on the roof tonneau and raise it to the upright position.

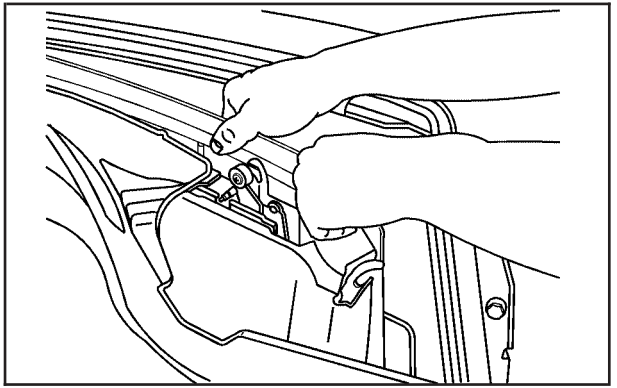

11. Grasp the front panel of the convertible top and pull up.

    You will need more than one person to do this. One person working on each side of the vehicle is best.

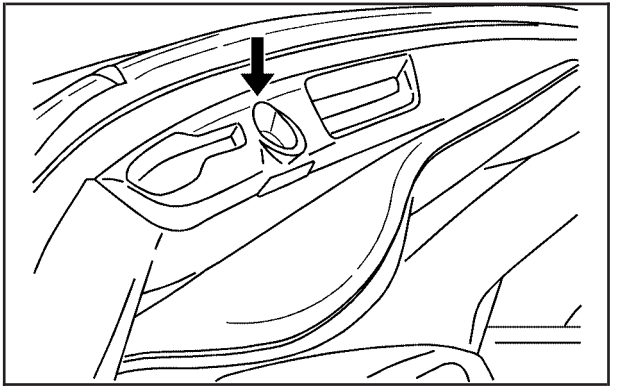

Driver's side roof latch shown, passenger's side similar

12. Insert the front panel into the roof latches.

    One person should hold the convertible top in the closed position by pushing it up in the rear, while another person performs the next steps.

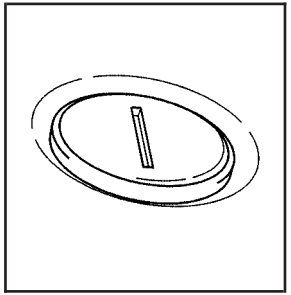

13. Remove the plastic cap located between the sun visors. Turn the cap in either direction about a quarter of a turn, then pull downward to remove it.

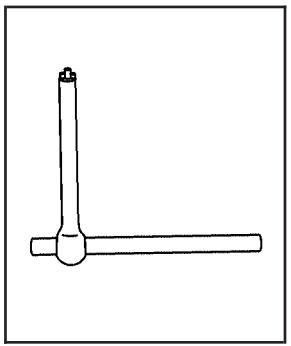

14. Slide the tool side of the convertible top release tool until the entire tool forms a right angle as shown.

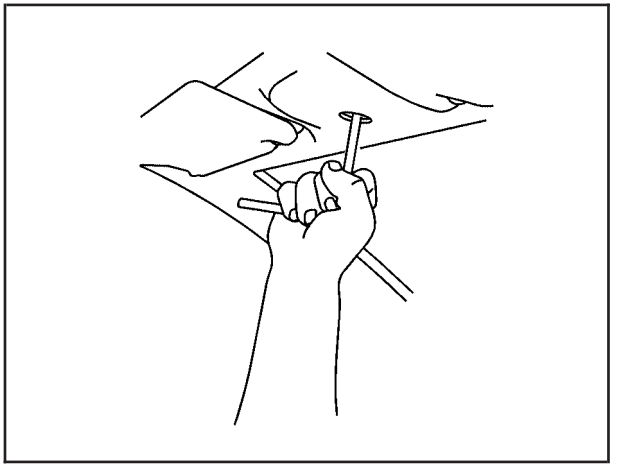

15. Insert the convertible top release tool into the latch closing mechanism between the sun visors and turn it counterclockwise until the roof latches are secured and the convertible top is fully closed.

    Then replace the plastic cap.

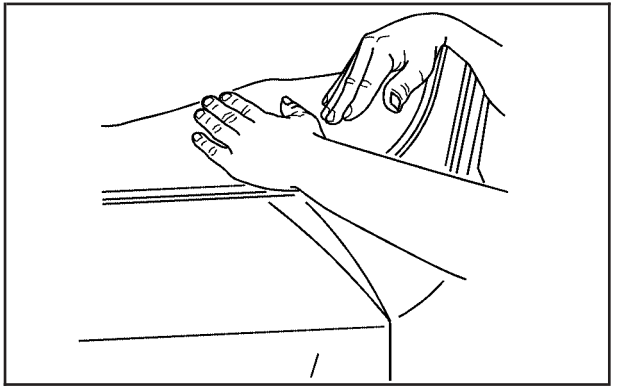

16. From the upright position, push down on the outer area of the boot cover panel where the hinges and hydraulic cylinders are located to separate it from the roof tonneau. Then, continue to push the boot cover panel down as far as it will go.

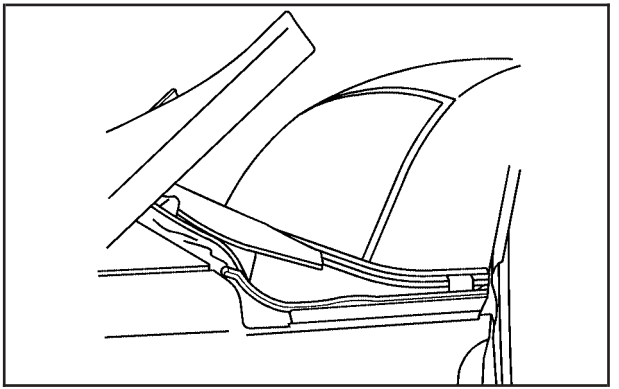

Boot cover panel down, roof tonneau up

17. Push down the roof tonneau cover. Be sure the boot cover clears the rear roof panel.
18. Latch the tonneau panel. Pull the red cable with the release tool until the cable is pulled tight and the roof tonneau latch engages.

19. Repeat Step 18 on the other side of the vehicle.
20. You will know the latches are engaged if the roof tonneau cannot be raised. If the roof tonneau can be raised, repeat Step 18 on both sides of the vehicle until the roof tonneau cannot be raised.
21. Once the roof tonneau is closed, adjust the cables located behind the seats. Pull the cable with the red band until both cables are the same length. Repeat this step on the other side of the vehicle.
22. Check the roof tonneau to make sure it is secure before driving.

Vehicle Personalization

Memory Seat

Your vehicle may have a memory driver's seat. The controls are located on the outboard of the driver's seat, and are used to program and recall memory settings for the driver's seating positions.

Adjust the driver's seat to the desired position. Press the SET button, then press and hold button 1 (for Driver 1) for three seconds. A double chime will sound to let you know that the position has been stored.

A second seating position can be programmed by repeating the procedure with a second driver and pressing button 2 for three seconds. Each time button 1 or 2 is pressed and released while the vehicle is in PARK (P), a single chime will sound, and the memory position will be recalled.

If you use the unlock button on the remote keyless entry transmitter to enter your vehicle, the preset driver's seat positions will be recalled if programmed to do so through the Driver Information Center (DIC). The numbers on the back of the transmitters, 1 or 2, correspond to the numbers on the memory controls.

The seat positions can also be recalled by placing the key in the ignition if programmed to do so through the Driver Information Center (DIC).

To stop recall movement of the memory feature at any time, press one of the power seat controls or memory buttons.

Further programming for automatic seat can be done through the Driver Information Center (DIC). See *DIC Vehicle Personalization on page 3-55* for more information.

NOTES

Section 3 Instrument Panel

Instrument Panel Overview 3-2
Hazard Warning Flashers 3-3
Other Warning Devices 3-4
Horn 3-4
Tilt Wheel 3-5
Turn Signal/Multifunction Lever 3-5
Exterior Lamps 3-12
Interior Lamps 3-15
Center Console Switchbank 3-17
Accessory Power Outlets 3-17
Ashtrays and Cigarette Lighter 3-18

Climate Controls 3-19
Climate Control System 3-19
Outlet Adjustment 3-22

Warning Lights, Gages, and Indicators 3-23
Instrument Panel Cluster 3-24
Speedometer and Odometer 3-25
Trip Odometer 3-25
Tachometer 3-25
Safety Belt Reminder Light 3-26
Air Bag Readiness Light 3-26
Air Bag Off Light 3-28
Charging System Light 3-29
Brake System Warning Light 3-30
Anti-Lock Brake System Warning Light 3-31
Traction Control System (TCS) Warning Light ...3-31
Engine Coolant Temperature Gage 3-32
Malfunction Indicator Lamp 3-32
Oil Pressure Gage 3-36
Change Engine Oil Light 3-37
Security Light 3-37
Cruise Control Light 3-38
Reduced Engine Power Light 3-38
Highbeam On Light 3-39
Check Gages Warning Light 3-39
Fuel Gage 3-40
Auxiliary Gage Package 3-41

Driver Information Center (DIC) 3-44
DIC Controls and Displays 3-44
DIC Warnings and Messages 3-48
DIC Vehicle Personalization 3-55

Audio System(s) 3-61
Setting the Time 3-61
Radio with CD 3-62
Radio with Six-Disc CD 3-71
Theft-Deterrent Feature 3-85
Audio Steering Wheel Controls 3-86
Radio Reception 3-87
Care of Your CDs 3-87
Care of Your CD Player 3-87
Integrated Windshield Antenna 3-87

Instrument Panel Overview

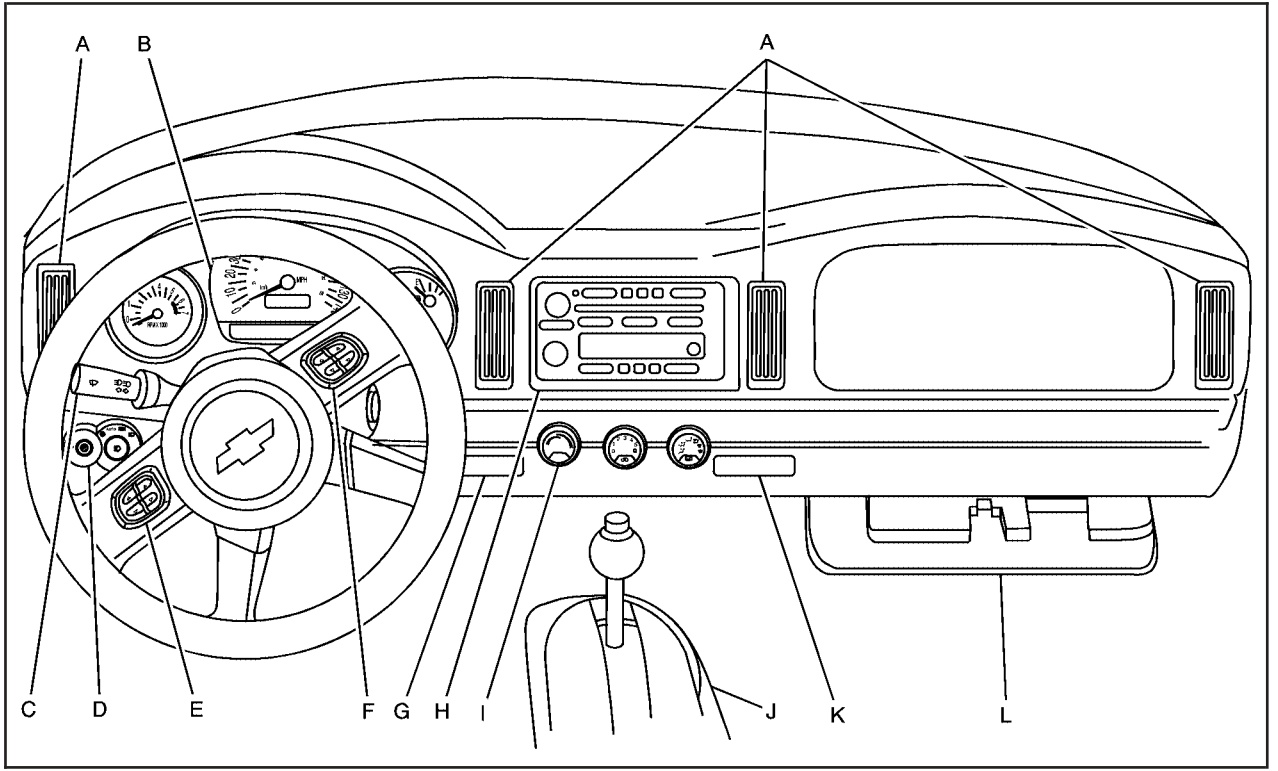

A. Climate Control Vents. See *Climate Control System on page 3-19*.

B. Instrument Panel Cluster. See *Instrument Panel Cluster on page 3-24*.

C. Turn Signal/Multifunction Lever. See *Turn Signal/Multifunction Lever on page 3-5*.

D. Exterior and Interior Lamps Control. See *Exterior Lamps on page 3-12* and *Interior Lamps on page 3-15*.

E. Driver Information Center (DIC) buttons. See *Driver Information Center (DIC) on page 3-44*.

F. Audio Steering Wheel Controls. See *Audio Steering Wheel Controls on page 3-86*.

G. Storage Tray. See *Instrument Panel Storage Area on page 2-30*.

H. Audio System. See *Audio System(s) on page 3-61*.

I. Climate Control System. See *Climate Control System on page 3-19*.

J. Transmission Shift Lever. See *Automatic Transmission Operation on page 2-16*.

K. Cupholder. See *Cupholder(s) on page 2-30*.

L. Glovebox. See *Glove Box on page 2-30*.

Hazard Warning Flashers

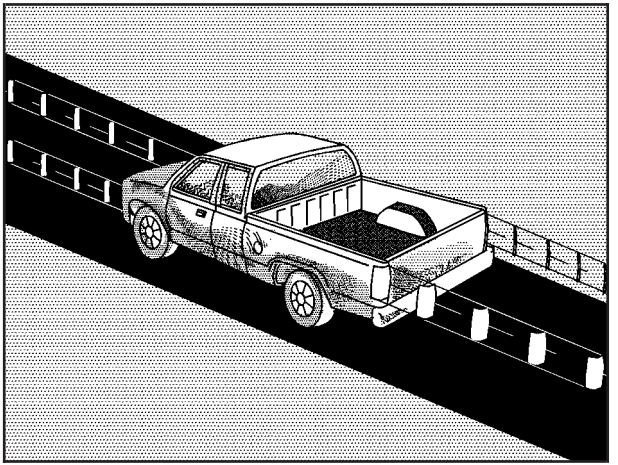

Your hazard warning flashers let you warn others. They also let police know you have a problem. Your front and rear turn signal lamps will flash on and off.

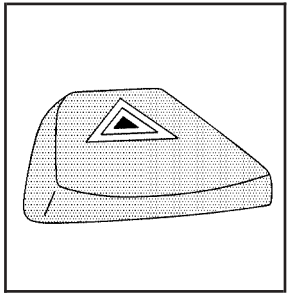

The hazard warning flasher button is located on the top of the steering column.

Your hazard warning flashers work no matter what position your key is in, and even if the key isn't in.

Press the button to make the front and rear turn signal lamps flash on and off. Press the button again to turn the flashers off.

When the hazard warning flashers are on, your turn signals won't work. The flashers will stop if you step on the brake.

Other Warning Devices

If you carry reflective triangles, you can set one up at the side of the road about 300 feet (100 m) behind your vehicle.

Horn

To sound the horn, press the horn symbol on the steering wheel pad.

Tilt Wheel

A tilt wheel allows you to adjust the steering wheel before you drive. You can raise it to the highest level to allow more room for the driver to enter and exit the vehicle.

The tilt lever is located on the driver's side of the steering column, under the turn signal lever.

To tilt, hold the steering wheel and pull the tilt lever toward you. Move the wheel to a comfortable level, then release the tilt lever to lock the wheel in place.

Do not adjust the steering wheel while driving.

Turn Signal/Multifunction Lever

The lever on the left side of the steering column includes the following:

- Turn and Lane Change Signals
- Headlamp High/Low-Beam Changer
- Flash-to-Pass Feature
- Windshield Wipers
- Windshield Washer
- Cruise Control

Turn and Lane Change Signals

The turn signal has two upward (for right) and two downward (for left) positions. These positions allow you to signal a turn or a lane change.

To signal a turn, move the lever all the way up or down. When the turn is finished, the lever will return automatically.

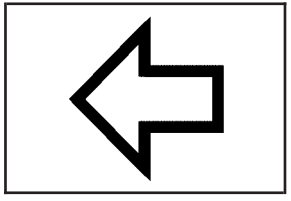

An arrow on the instrument panel cluster will flash in the direction of the turn or lane change.

To signal a lane change, just raise or lower the lever until the arrow starts to flash. Hold it there until you complete your lane change. The lever will return by itself when you release it. The bottom of the outside rearview mirrors may also be equipped with lane change indicators.

As you signal a turn or a lane change, if the arrows flash more quickly than normal, a signal bulb may be burned out and other drivers won't see your turn signal.

If a bulb is burned out, replace it to help avoid an accident. If the arrows don't go on at all when you signal a turn, check the fuse. See *Fuses and Circuit Breakers on page 5-84* and for burned-out bulbs.

If you have a trailer towing option with added wiring for the trailer lamps, a different turn signal flasher is used. With this flasher installed, the signal indicator will flash even if a turn signal bulb is burned out. Check the front and rear turn signal lamps regularly to make sure they are working.

Turn Signal On Chime

If your turn signal is left on for more than 3/4 of a mile (1.2 km), a chime will sound at each flash of the turn signal. You will also receive a DIC message. See "Turn Signal On" under *DIC Warnings and Messages on page 3-48* for more information. To turn off the chime, move the turn signal lever to the off position.

Headlamp High/Low-Beam Changer

To change the headlamps from low to high beam, push the lever toward the instrument panel. To return to low-beam headlamps, pull the multifunction lever toward you. Then release it.

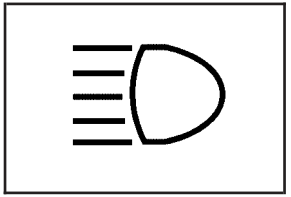

When the high beams are on, this indicator light on the instrument panel cluster will also be on.

Flash-to-Pass

This feature lets you use your high-beam headlamps to signal a driver in front of you that you want to pass. It works even if your headlamps are in the automatic position.

To use it, pull the turn signal lever toward you, then release it.

If your headlamps are in the automatic position or on low beam, your high-beam headlamps will turn on. They'll stay on as long as you hold the lever toward you. The high-beam indicator on the instrument panel cluster will come on. Release the lever to return to normal operation.

Windshield Wipers

(Windshield Wipers): To use the windshield wipers, turn the band with the wiper symbol on it.

(Mist): For a single wiping cycle, turn the band to mist. Hold it there until the wipers start. Then let go. The wipers will stop after one wipe. If you want more wipes, hold the band on mist longer.

Delayed Wipers: You can set the wiper speed for a long or short delay between wipes. This can be very useful in light rain or snow. Turn the band to one of the dashed marks on the lever to choose the delay time. The closer to the top of the lever, the shorter the delay.

(Low Speed): For steady wiping at low speed, turn the band away from you to the first solid band past the delay settings.

(High Speed): For high-speed wiping, turn the band further, to the second solid band past the delay settings.

◯ **(Off):** Turn the band to this symbol to turn of your windshield wipers.

> **⚠ CAUTION:**
>
> **In freezing weather, do not use your washer until the windshield is warmed. Otherwise the washer fluid can form ice on the windshield, blocking your vision.**

(Windshield Washer): To spray washer fluid on the windshield, press the paddle. The wipers will clear the window and then either stop or return to your preset speed.

Cruise Control

With cruise control, you can maintain a speed of about 25 mph (40 km/h) or more without keeping your foot on the accelerator. This can really help on long trips. Cruise control does not work at speeds below about 25 mph (40 km/h).

If you apply your brakes, the cruise control will shut off.

> **⚠ CAUTION:**
>
> **Cruise control can be dangerous where you can not drive safely at a steady speed. So, do not use your cruise control on winding roads or in heavy traffic.**
>
> **Cruise control can be dangerous on slippery roads. On such roads, fast changes in tire traction can cause needless wheel spinning, and you could lose control. Do not use cruise control on slippery roads.**

> **⚠ CAUTION:**
>
> **If you leave your cruise control on when you are not using cruise, you might hit a button and go into cruise when you do not want to. You could be startled and even lose control. Keep the cruise control switch off until you want to use cruise control.**

Setting Cruise Control

Your cruise control is located at the end of your turn signal/multifunction lever.

| **(On):** Move the switch to this position to turn the cruise control system on.

+ **(Resume/Accelerate):** Move the switch to this position to resume a set speed or to accelerate.

(Set): Press this button, located at the end of the lever, to set a speed.

○ **(Off):** This position turns the cruise control system off and cancels memory of a set speed.

1. Move the cruise control switch to on.
2. Get up to the speed you want.
3. Press in the set button at the end of the lever and release it.
4. Take your foot off the accelerator pedal. The accelerator pedal will not go down.

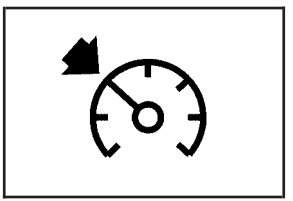

The Cruise light on the instrument panel cluster will illuminate when the cruise control is engaged.

Resuming a Set Speed

Suppose you set your cruise control at a desired speed and then you apply the brake. This, of course, shuts off the cruise control. But you don't need to reset it.

Once you're going about 25 mph (40 km/h) or more, you can move the cruise control switch briefly from on to resume/accelerate.

You'll go right back up to your chosen speed and stay there.

If you hold the switch at resume/accelerate, the vehicle will keep going faster until you release the switch or apply the brake. So unless you want to go faster, don't hold the switch at resume/accelerate.

Increasing Speed While Using Cruise Control

There are two ways to go to a higher speed:

- Use the accelerator pedal to get to the higher speed. Press the button at the end of the lever, then release the button and the accelerator pedal. You'll now cruise at the higher speed.
- Move the cruise switch from on to resume/accelerate. Hold it there until you get up to the speed you want, and then release the switch. To increase your speed in very small amounts, move the switch briefly to resume/accelerate. Each time you do this, your vehicle will go about 1 mph (1.6 km/h) faster.

Reducing Speed While Using Cruise Control

- Press and hold the button at the end of the lever until you reach the lower speed you want, then release it.
- To slow down in very small amounts, briefly press and release the set button. Each time you do this, you'll go about 1 mph (1.6 km/h) slower.

Passing Another Vehicle While Using Cruise Control

Use the accelerator pedal to increase your speed. When you take your foot off the pedal, your vehicle will slow down to the cruise control speed you set earlier.

Using Cruise Control on Hills

How well your cruise control will work on hills depends upon your speed, load and the steepness of the hills. When going up steep hills, you may want to step on the accelerator pedal to maintain your speed. When going downhill, you may have to brake or shift to a lower gear to keep your speed down. Of course, applying the brake takes you out of cruise control. Many drivers find this to be too much trouble and don't use cruise control on steep hills.

Ending Cruise Control

There are three ways to turn off the cruise control:

- Step lightly on the brake pedal.
- Move the cruise switch to off, or
- Shift the transmission to NEUTRAL (N).

Erasing Speed Memory

When you turn off the cruise control or the ignition, your cruise control set speed memory is erased.

Exterior Lamps

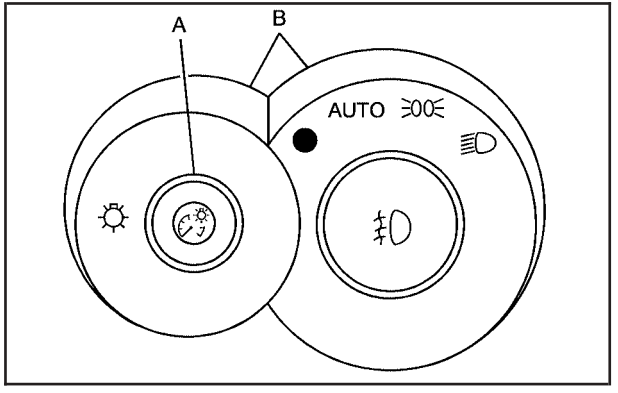

(Exterior and Interior Lamps Controls): These controls (B) are located to the left of the steering wheel and are used to operate the exterior and interior lamps. Information on the exterior lamps follows.

(Interior Lamps Control): The interior lamp control (A) is used to adjust the brightness of the instrument panel lights. For more information on interior lamps, see *Interior Lamps on page 3-15*.

The exterior lamps control operates the following systems:

- Headlamps
- Taillamps
- Parking Lamps
- License Lamps
- Sidemarker Lamps
- Instrument Panel Lights
- Interior Courtesy Lamps

(Fog Lamp Indicator Light): This light illuminates when the fog lamps are turned on. See “Fog Lamps” later in this section for more information.

AUTO (Automatic Headlamp System): Turning the exterior lamps control to this position activates the automatic headlamp system. See “Automatic Headlamp System” following in this section for more information.

(Parking Lamps): Turning the exterior lamps control to this position turns on the parking lamps, license plate lamps, the sidemarker lamps and the instrument panel lights.

(Headlamps): Turning the exterior lamps control to this position turns on the headlamps, together with the previously listed lamps and lights.

Automatic Headlamp System

When it is dark enough outside, your automatic headlamp system will turn on your headlamps at the normal brightness along with other lamps such as the taillamps, sidemarker, parking lamps and the instrument panel lights when the exterior lamps knob is turned to AUTO. The radio lights will also be on.

Your vehicle is equipped with a light sensor on the top of the instrument panel. Be sure it is not covered or the system will be on whenever the ignition is on.

The system may also turn on your lights when driving through a parking garage, heavy overcast weather or a tunnel. This is normal.

There is a delay in the transition between the daytime and nighttime operation of the Daytime Running Lamps (DRL) and the automatic headlamp systems so that driving under bridges or bright overhead street lights does not affect the system. The DRL and automatic headlamp system will only be affected when the light sensor sees a change in lighting lasting longer than the delay.

To idle your vehicle with the automatic headlamp system off, set the parking brake while the ignition is off. Then start your vehicle. The automatic headlamp system will stay off until you release the parking brake, or until you shift out of PARK (P).

You may be able to turn off your automatic headlamp system. See “Daytime Running Lamps (DRL)” later in this section for more information.

If you start your vehicle in a dark garage, the automatic headlamp system will come on immediately. Once you leave the garage, it will take approximately one minute for the automatic headlamp system to change to DRL if it is light outside. During that delay, your instrument panel cluster may not be as bright as usual. Make sure your instrument panel brightness control is in the full bright position. See “Instrument Panel Brightness” under *Interior Lamps on page 3-15*.

As with any vehicle, you should turn on the regular headlamp system when you need it.

Lamps On Reminder

A reminder tone will sound when your headlamps or parking lamps are manually turned on, the driver’s door is open and your ignition is in OFF or ACCESSORY. To turn the tone off, turn the knob all the way counterclockwise. In the automatic mode, the headlamps turn off once the ignition key is in OFF.

Daytime Running Lamps

Daytime Running Lamps (DRL) can make it easier for others to see the front of your vehicle during the day. DRL can be helpful in many different driving conditions, but they can be especially helpful in the short periods after dawn and before sunset. Fully functional daytime running lamps are required on all vehicles first sold in Canada.

The DRL system will make your headlamps come on at reduced brightness when the following conditions are met:

- The ignition is on.
- The exterior lamps knob is in AUTO.
- The light sensor detects daytime light.
- The transmission is not in PARK (P).

When the DRL are on, only your headlamps will be on. The taillamps, sidemarker and other lamps won't be on. The instrument panel won't be lit up either.

When it begins to get dark, the headlamps will automatically switch from DRL to the regular headlamps.

To idle your vehicle with the DRL off, put your vehicle's transmission in PARK (P). The DRL will stay off until you shift out of PARK (P).

Fog Lamps

Use your fog lamps for better vision in foggy or misty conditions. Your ignition must be in RUN for your fog lamps to work.

(Fog Lamps): Press this button located on the exterior lamps control to turn the fog lamps on or off. The fog lamps will go off whenever you turn on the high-beam headlamps. When the high beams are turned off, the fog lamps will come on again.

(Fog Lamp Indicator Light): This light located on the exterior lamps control illuminates when the fog lamps are turned on.

Interior Lamps

Instrument Panel Brightness

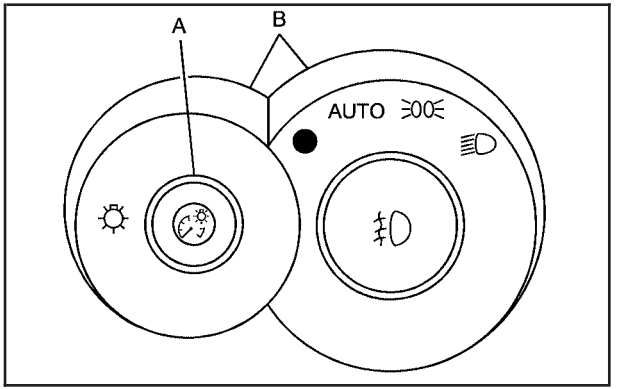

(Exterior and Interior Lamp Controls): These controls (B) are used to operate the exterior and interior lamps. Information on the interior lamps follows. For more information on the exterior lamps, see *Exterior Lamps on page 3-12*.

(Interior Lamp Control): The interior lamp control (A) is located to the left of the steering wheel and is used to adjust the brightness of the instrument panel lights.

Press lightly on the interior lamp control and release. The control will extend outward. Turn the control clockwise to brighten and counterclockwise to dim the instrument panel lights. Press on the control to return it to the stored position.

Exit Lighting

With the exit lighting, the interior lamps will come on when you remove the key from the ignition to help you see while exiting the vehicle.

Parade Dimming

This feature prohibits the dimming of your instrument panel displays during daylight while your headlamps are on. When the light sensor reads darkness outside, you will be able to dim your instrument panel displays once again.

Perimeter Lighting

When the button with the unlock symbol on the remote keyless entry transmitter is pressed, the DRL, parking lamps and back-up lamps will come on if it is dark enough outside.

This feature can be personalized for up to two drivers. See *DIC Vehicle Personalization on page 3-55* for more information.

Front Map Lamps

If your vehicle has front map lamps, they are located on the inside rearview mirror. They will automatically come on for about 40 seconds when the doors are unlocked with the remote keyless entry transmitter or until the ignition key is turned to RUN or ACCESSORY. The lamps will also stay on for about 40 seconds after you exit the vehicle unless you lock the doors with the remote keyless entry transmitter.

You can also turn the lamps on and off by pressing the button near each lamp.

Battery Rundown Protection

This feature shuts off all lamps that are left on for more than 10 minutes when the ignition is off. This will keep your battery from running down.

Center Console Switchbank

The following controls are located on your center console switchbank:

A. Driver Power Window. See *Power Windows on page 2-10*.

B. Traction Control System (TCS). See *Traction Control System (TCS) on page 4-9*.

C. Convertible Top. See *Convertible Top on page 2-45*.

D. Power Door Locks. See *Power Door Locks on page 2-7*.

E. Passenger Power Window. See *Power Windows on page 2-10*.

Accessory Power Outlets

With accessory power outlets you can plug in auxiliary electrical equipment such as a cellular telephone or CB radio.

There is an accessory power outlet located on either side of the ashtray on the instrument panel, and there is an outlet in the rear cargo area. A small cap must be removed to access an accessory power outlet. When not using an outlet be sure to cover it with the protective cap.

The accessory power outlets will only operate when the ignition is in ACCESSORY or RUN and for 10 minutes after turning the ignition to OFF.

Notice: **Leaving electrical equipment on for extended periods will drain the battery. Always turn off electrical equipment when not in use and do not plug in equipment that exceeds the maximum amperage rating.**

Certain electrical accessories may not be compatible with the accessory power outlet and could result in blown vehicle or adapter fuses. If you experience a problem, see your dealer for additional information on accessory power outlets.

Notice: **Adding any electrical equipment to your vehicle may damage it or keep other components from working as they should. The repairs would not be covered by your warranty. Check with your dealer before adding electrical equipment.**

When adding electrical equipment, be sure to follow the proper installation instructions included with the equipment.

Notice: **Improper use of the power outlet can cause damage not covered by your warranty. Do not hang any type of accessory or accessory bracket from the plug because the power outlets are designed for accessory power plugs only.**

Ashtrays and Cigarette Lighter

Your vehicle has an ashtray and cigarette lighter.

To access, push the upper edge of the center instrument panel door until it clicks and then release. The door will open to expose the ashtray and cigarette lighter.

Notice: **If you put papers or other flammable items in the ashtray, hot cigarettes or other smoking materials could ignite them and possibly damage your vehicle. Never put flammable items in the ashtray.**

Notice: **Holding a cigarette lighter in while it is heating will not allow the lighter to back away from the heating element when it is hot. Damage from overheating may occur to the lighter or heating element, or a fuse could be blown. Do not hold a cigarette lighter in while it is heating.**

Climate Controls

Climate Control System

A. Temperature Knob

B. Fan Knob

C. Mode Knob

With this system you can control the heating, cooling, and ventilation for your vehicle.

Temperature Knob

The left knob on the control panel is used to adjust the temperature of the air in the vehicle. Turn the knob clockwise or counterclockwise to increase or decrease the temperature.

(Air Conditioning): Press this button located on the temperature knob to turn the air-conditioning system on or off. An indicator light on the button will come on to let you know the air conditioning is activated. When the system is on, this setting cools and dehumidifies the air entering your vehicle and directs it through the floor ducts as well as the instrument panel outlets.

The air conditioning system removes moisture from the air, so you may sometimes notice a small amount of water dripping underneath your vehicle while idling or after turning off the engine. This is normal.

The air conditioning will not function if the fan is turned off.

Fan Knob

The center knob on the control panel is used to control the fan speed. Turn the knob clockwise or counterclockwise to increase or decrease the fan speed.

(Recirculation): This mode keeps outside air from coming in the vehicle. It can be used to prevent outside air and odors from entering your vehicle or help heat or cool the air inside your vehicle more quickly. Press this button on the fan knob to turn the recirculation mode on or off. An indicator light on the button will come on to let you know the recirculation mode is activated.

Recirculation is only available in the bi-level and vent modes. If you push the recirculation button while the system is in any other mode, the light on the button will flash to indicate that recirculation is not available.

Mode Knob

The right knob on the control panel is used to direct the airflow inside your vehicle. Turn the knob to select one of the following modes:

(Vent): Select this mode to direct air to the instrument panel outlets.

(Bi-Level): Select this mode to direct approximately half of the air to the instrument panel outlets, and the remaining air to the floor outlets and the defroster and side window outlets. Cooler air is directed to the upper outlets and warmer air to the floor outlets.

(Floor): Select this mode to direct air to the floor outlets. Recirculation does not work in this mode.

Defogging and Defrosting

Fog on the inside of windows is a result of high humidity (moisture) condensing on the cool window glass. This can be minimized if the climate control system is used properly. There are two modes to clear fog or frost from your windshield and side windows. Use the defog mode to clear the windows of fog or moisture and warm the passengers. Use the defrost mode to remove fog or frost from the windshield more quickly. For best results, clear all snow and ice from the windshield before defrosting.

(Floor/Defog): This mode directs half of the air to the windshield and the side window outlets and the other half to the floor outlets. When you select this mode, the system runs the air-conditioning compressor unless the outside temperature is at or below freezing. Recirculation is not available in this mode.

(Defrost): This mode directs most of the air to the windshield, with some air directed to the side window outlets and the floor outlets. When you select this mode, the system runs the air-conditioning compressor unless the outside temperature is at or below freezing. Recirculation is not available in this mode.

(Maximum Defrost): This mode directs most of the air to the windshield, with some air directed to the side window outlets and the floor outlets. The rear window defogger and heated outside mirrors will turn on, and the fan speed will be at the highest setting (5). The temperature will be at the hottest setting also. Recirculation is not available in this mode.

Do not drive the vehicle until all the windows are clear.

Rear Window Defogger

The rear window defogger uses a warming grid to remove fog from the rear window.

The rear window defogger will only work when the ignition is on.

(Rear): Press this button on the right knob to turn the rear window defogger on or off. An indicator light on the button will come on to let you know that the rear window defogger is activated.

When the rear defogger button is pressed, the outside heated mirrors will warm to help clear any fog or frost from the surface of the mirrors.

Notice: **Using a razor blade or sharp object to clear the inside rear window may damage the rear window defogger. Repairs would not be covered by your warranty. Do not clear the inside of the rear window with sharp objects.**

Outlet Adjustment

Use the levers located in the center of each outlet to change the direction of the airflow.

Operation Tips

- Clear away any ice, snow or leaves from the air inlets at the base of the windshield that may block the flow of air into your vehicle.
- Use of non-GM approved hood deflectors may adversely affect the performance of the system.
- Keep the path under the front seats clear of objects to help circulate the air inside of your vehicle more effectively.

Warning Lights, Gages, and Indicators

This part describes the warning lights and gages that may be on your vehicle. The pictures will help you locate them.

Warning lights and gages can signal that something is wrong before it becomes serious enough to cause an expensive repair or replacement. Paying attention to your warning lights and gages could also save you or others from injury.

Warning lights come on when there may be or is a problem with one of your vehicle's functions. As you will see in the details on the next few pages, some warning lights come on briefly when you start the engine just to let you know they're working. If you are familiar with this section, you should not be alarmed when this happens.

Gages can indicate when there may be or is a problem with one of your vehicle's functions. Often gages and warning lights work together to let you know when there's a problem with your vehicle.

When one of the warning lights comes on and stays on when you are driving, or when one of the gages shows there may be a problem, check the section that tells you what to do about it. Please follow this manual's advice. Waiting to do repairs can be costly, and even dangerous. So please get to know your warning lights and gages. They're a big help.

Your vehicle also has a Driver Information Center (DIC) that works along with the warning lights and gages. See *Driver Information Center (DIC) on page 3-44* for more information.

Instrument Panel Cluster

Your instrument panel cluster is designed to let you know at a glance how your vehicle is running. You'll know how fast you're going, about how much fuel you've used, and many other things you'll need to know to drive safely and economically.

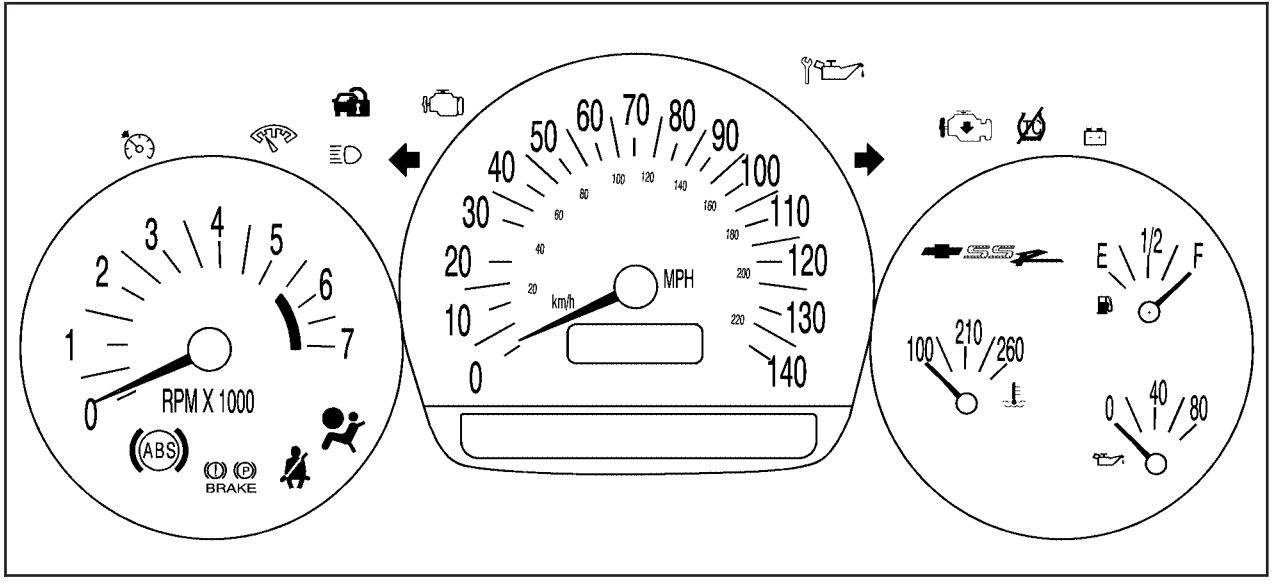

United States version shown, Canada similar

Speedometer and Odometer

The speedometer lets you see your speed in both miles per hour (mph) and kilometers per hour (km/h).

The odometer shows how far your vehicle has been driven, in either miles (used in the United States) or kilometers (used in Canada).

The odometer mileage can be checked without the vehicle running. Turn the ignition to RUN and press the trip information button located on the steering wheel. See *DIC Controls and Displays on page 3-44* for more information.

You may wonder what happens if your vehicle needs a new odometer installed. If the new one can be set to the mileage total of the old odometer, then it must be. But if it can't, then it's set at zero, and a label must be put on the driver's door to show the old mileage reading when the new odometer was installed.

Trip Odometer

The trip odometer can tell you how far your vehicle has been driven since you last set the trip odometer to zero.

Your trip odometer is part of your Driver Information Center (DIC). The trip information button toggles to display your trip odometer, Trip A, and Trip B functions. See "Trip Odometer" under *DIC Controls and Displays on page 3-44* for more information.

Tachometer

Notice: **If you operate the engine with the tachometer in the shaded warning area, your vehicle could be damaged, and the damages would not be covered by your warranty. Do not operate the engine with the tachometer in the shaded warning area.**

The tachometer displays the engine speed in revolutions per minute (rpm).

Fuel will shut off at about 6500 rpm. It will turn back on again once the vehicle rpm drops below 6500.

Safety Belt Reminder Light

When the key is turned to RUN or START, a chime will come on for several seconds to remind people to fasten their safety belts, unless the driver's safety belt is already buckled.

The safety belt light will also come on and stay on for several seconds, then it will flash for several more.

If the driver's belt is already buckled, neither the chime nor the light will come on.

Air Bag Readiness Light

There is an air bag readiness light on the instrument panel cluster, which shows the air bag symbol. The system checks the air bag's electrical system for malfunctions. The light tells you if there is an electrical problem. The system check includes the air bag sensors, the air bag modules, the wiring and the crash sensing and diagnostic module. For more information on the air bag system, see *Air Bag Systems on page 1-42*.

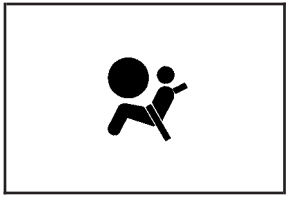

This light will come on when you start your vehicle, and it will flash for a few seconds. Then the light should go out. This means the system is ready.

If the air bag readiness light stays on after you start the vehicle or comes on when you are driving, your air bag system may not work properly. Have your vehicle serviced right away.

⚠ CAUTION:

If the air bag readiness light stays on after you start your vehicle, it means the air bag system may not be working properly. The air bags in your vehicle may not inflate in a crash, or they could even inflate without a crash. To help avoid injury to yourself or others, have your vehicle serviced right away if the air bag readiness light stays on after you start your vehicle.

The air bag readiness light should flash for a few seconds when you turn the ignition key to RUN. If the light doesn't come on then, have it fixed so it will be ready to warn you if there is a problem.

Air Bag Off Light

When you turn the passenger's frontal air bag off, the air bag off light, located on the roof panel above the rearview mirror, will come on and stay on to remind you that the air bag has been turned off. This light will go off when you turn the passenger's frontal air bag back on again. See *Air Bag Off Switch on page 1-51* for more on this, including important safety information.

⚠ CAUTION:

If the passenger's frontal air bag is turned off for a person who is not in a risk group identified by the national government, that person will not have the extra protection of a frontal air bag. In a crash, the air bag would not be able to inflate and help protect the person sitting there. Do not turn off the passenger's frontal air bag unless the person sitting there is in a risk group. See *Air Bag Off Switch on page 1-51* for more on this, including important safety information.

⚠ CAUTION:

If the air bag readiness light ever comes on when you have turned off the passenger's frontal air bag, it means that something may be wrong with the air bag system. The passenger's frontal air bag could inflate even though the switch is off. If this ever happens, do not let anyone whom the national government has identified as a member of a passenger air bag risk group sit in the passenger's position (for example, do not secure a rear-facing child restraint in your vehicle) until you have your vehicle serviced. See *Air Bag Off Switch on page 1-51*.

Charging System Light

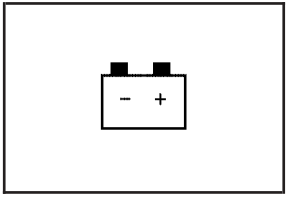

The charging system light will come on briefly when you turn on the ignition, but the engine is not running, as a check to show you it is working.

It should go out once the engine is running. If it stays on, or comes on while you are driving, you may have a problem with the charging system. It could indicate that you have problems with a generator drive belt, or another electrical problem. Have it checked right away. Driving while this light is on could drain your battery.

If you must drive a short distance with the light on, be certain to turn off all your accessories, such as the radio and air conditioner.

Brake System Warning Light

When the ignition is on, the brake system warning light will come on when you set your parking brake. See *Parking Brake on page 2-18* for more information. The light will stay on if your parking brake doesn't release fully. If it stays on after your parking brake is fully released, it means you have a brake problem.

Your vehicle's hydraulic brake system is divided into two parts. If one part isn't working, the other part can still work and stop you. For good braking, though, you need both parts working well.

If the warning light comes on, there could be a brake problem. Have your brake system inspected right away.

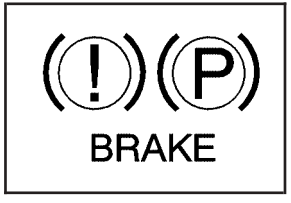

United States

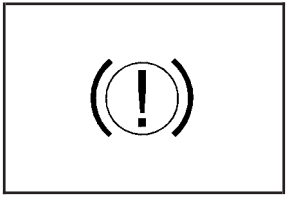

Canada

This light should come on briefly when you turn the ignition key to RUN. If it doesn't come on then, have it fixed so it will be ready to warn you if there's a problem.

If the light comes on while you are driving, pull off the road and stop carefully. You may notice that the pedal is harder to push. Or, the pedal may go closer to the floor. It may take longer to stop. If the light is still on, have the vehicle towed for service. See *Towing Your Vehicle on page 4-32*.

⚠ CAUTION:

Your brake system may not be working properly if the brake system warning light is on. Driving with the brake system warning light on can lead to an accident. If the light is still on after you have pulled off the road and stopped carefully, have the vehicle towed for service.

Anti-Lock Brake System Warning Light

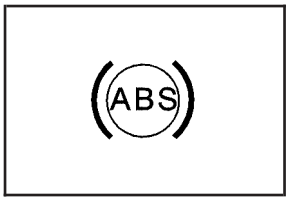

With the anti-lock brake system, this light will come on when you start your engine and may stay on for several seconds. That's normal.

If the light stays on, or comes on when you're driving, your vehicle needs service. If the regular brake system warning light isn't on, you still have brakes, but you don't have anti-lock brakes. If the regular brake system warning light is also on, you don't have anti-lock brakes and there's a problem with your regular brakes. See *Brake System Warning Light on page 3-30*.

The anti-lock brake system warning light should come on briefly when you turn the ignition key to RUN. If the light doesn't come on then, have it fixed so it will be ready to warn you if there is a problem.

Traction Control System (TCS) Warning Light

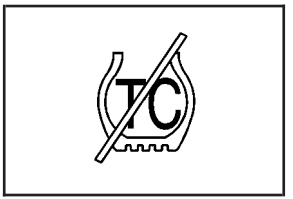

If the TC (traction control) warning light comes on and stays on, there may be a problem with the traction control system.

The TC (traction control) warning light will come on briefly when you turn the ignition to ON. If it doesn't come on then, have it fixed so it will be ready to warn you if there is a problem.

If the Traction Control System (TCS) is on and you drive faster than 100 mph (161 km/h), the system will turn off and the TC warning light will come on. The TCS will turn back on and the TC warning light will go out once the vehicle speed falls below 90 mph (145 km/h).

If the TC (traction control) warning light stays on or comes on while you are driving, pull off the road as soon as possible and stop carefully. Try resetting the system by turning the ignition off then back on. If the light still stays on or comes back on again while you are driving, your vehicle needs service. Have the traction control system inspected as soon as possible.

Engine Coolant Temperature Gage

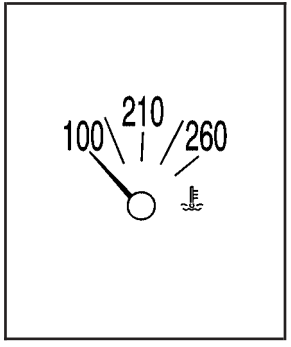

United States

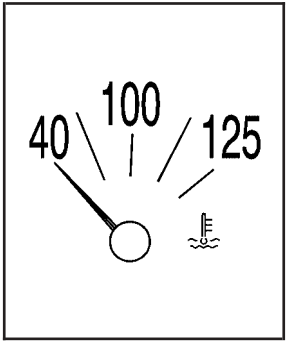

Canada

This gage shows the engine coolant temperature. If the gage pointer is near 260 °F (125 °C), the engine is too hot.

It means that your engine coolant has overheated. If you have been operating your vehicle under normal driving conditions, you should pull off the road, stop your vehicle and turn off the engine as soon as possible.

See *Engine Overheating on page 5-26* for more information.

Malfunction Indicator Lamp

Check Engine Light

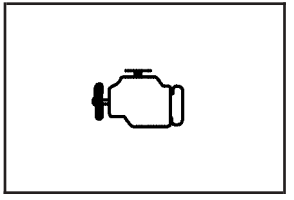

Your vehicle is equipped with a computer which monitors operation of the fuel, ignition and emission control systems.

This system is called OBD II (On-Board Diagnostics-Second Generation) and is intended to assure that emissions are at acceptable levels for the life of the vehicle, helping to produce a cleaner environment. The check engine light comes on to indicate that there is a problem and service is required. Malfunctions often will be indicated by the system before any problem is apparent. This may prevent more serious damage to your vehicle. This system is also designed to assist your service technician in correctly diagnosing any malfunction.

Notice: **If you keep driving your vehicle with this light on, after a while, your emission controls may not work as well, your fuel economy may not be as good and your engine may not run as smoothly. This could lead to costly repairs that may not be covered by your warranty.**

Notice: **Modifications made to the engine, transmission, exhaust, intake or fuel system of your vehicle or the replacement of the original tires with other than those of the same Tire Performance Criteria (TPC) can affect your vehicle's emission controls and may cause this light to come on. Modifications to these systems could lead to costly repairs not covered by your warranty. This may also result in a failure to pass a required Emission Inspection/Maintenance test.**

This light should come on, as a check to show you it is working, when the ignition is on and the engine is not running. If the light does not come on, have it repaired. This light will also come on during a malfunction in one of two ways:

- **Light Flashing** — A misfire condition has been detected. A misfire increases vehicle emissions and may damage the emission control system on your vehicle. Diagnosis and service may be required.
- **Light On Steady** — An emission control system malfunction has been detected on your vehicle. Diagnosis and service may be required.

If the Light is Flashing

The following may prevent more serious damage to your vehicle:

- Reducing vehicle speed.
- Avoiding hard accelerations.
- Avoiding steep uphill grades.
- If you are towing a trailer, reduce the amount of cargo being hauled as soon as it is possible.

If the light stops flashing and remains on steady, see “If the Light Is On Steady” following.

If the light continues to flash, when it is safe to do so, *stop the vehicle.* Find a safe place to park your vehicle. Turn the key off, wait at least 10 seconds and restart the engine. If the light remains on steady, see “If the Light Is On Steady” following. If the light is still flashing, follow the previous steps, and see your dealer for service as soon as possible.

If the Light Is On Steady

You may be able to correct the emission system malfunction by considering the following:

Did you recently put fuel into your vehicle?

If so, reinstall the fuel cap, making sure to fully install the cap. See *Filling Your Tank on page 5-7*. The diagnostic system can determine if the fuel cap has been left off or improperly installed. A loose or missing fuel cap will allow fuel to evaporate into the atmosphere. A few driving trips with the cap properly installed should turn the light off.

Did you just drive through a deep puddle of water?

If so, your electrical system may be wet. The condition will usually be corrected when the electrical system dries out. A few driving trips should turn the light off.

Have you recently changed brands of fuel?

If so, be sure to fuel your vehicle with quality fuel. See *Gasoline Octane on page 5-5*. Poor fuel quality will cause your engine not to run as efficiently as designed. You may notice this as stalling after start-up, stalling when you put the vehicle into gear, misfiring, hesitation on acceleration or stumbling on acceleration. (These conditions may go away once the engine is warmed up.) This will be detected by the system and cause the light to turn on.

If you experience one or more of these conditions, change the fuel brand you use. It will require at least one full tank of the proper fuel to turn the light off.

If none of the above steps have made the light turn off, your dealer can check the vehicle. Your dealer has the proper test equipment and diagnostic tools to fix any mechanical or electrical problems that may have developed.

Emissions Inspection and Maintenance Programs

Some state/provincial and local governments have or may begin programs to inspect the emission control equipment on your vehicle. Failure to pass this inspection could prevent you from getting a vehicle registration.

Here are some things you need to know to help your vehicle pass an inspection:

Your vehicle will not pass this inspection if the check engine light is on or not working properly.

Your vehicle will not pass this inspection if the OBD (on-board diagnostic) system determines that critical emission control systems have not been completely diagnosed by the system. The vehicle would be considered not ready for inspection. This can happen if you have recently replaced your battery or if your battery has run down. The diagnostic system is designed to evaluate critical emission control systems during normal driving. This may take several days of routine driving. If you have done this and your vehicle still does not pass the inspection for lack of OBD system readiness, your GM dealer can prepare the vehicle for inspection.

Oil Pressure Gage

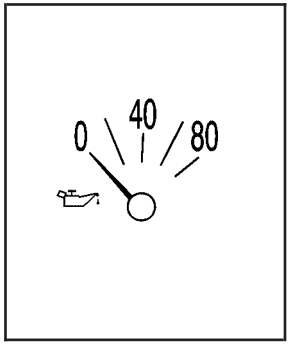

United States

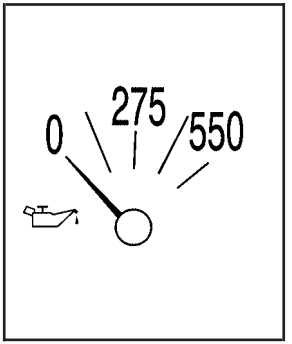

Canada

The oil pressure gage shows the engine oil pressure in psi (pounds per square inch) when the engine is running. Canadian vehicles indicate pressure in kPa (kilopascals).

⚠ CAUTION:

Do not keep driving if the oil pressure is low. If you do, your engine can become so hot that it catches fire. You or others could be burned. Check your oil as soon as possible and have your vehicle serviced.

Notice: **Lack of proper engine oil maintenance may damage the engine. The repairs would not be covered by your warranty. Always follow the maintenance schedule in this manual for changing engine oil.**

Oil pressure may vary with engine speed, outside temperature and oil viscosity, but readings above the low pressure zone indicate the normal operating range.

A reading in the low pressure zone may be caused by a low oil level or other oil-related problems. See your dealer for service immediately.

Change Engine Oil Light

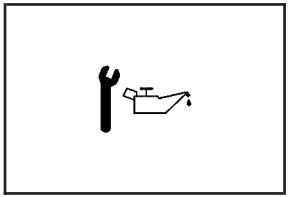

This light is displayed when the engine oil needs to be changed.

Once the engine oil has been changed, the light must be reset. Until it is reset, the light will be displayed when the engine is on. For more information on resetting the system, see “When to Change Engine Oil (GM Oil Life System)” under *Engine Oil on page 5-13*. See also *Scheduled Maintenance on page 6-4*.

Security Light

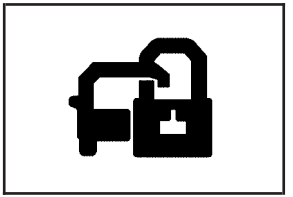

This light will come on briefly when you turn the key to START. The light will stay on until the engine starts.

If the light flashes, the Passlock® system has entered a tamper mode. If the vehicle fails to start, see *Passlock® on page 2-13*.

If the light comes on continuously while driving and stays on, there may be a problem with the Passlock® system. Your vehicle will not be protected by Passlock®, and you should see your dealer.

Also, see *Content Theft-Deterrent on page 2-11* for additional information regarding the security light.

Cruise Control Light

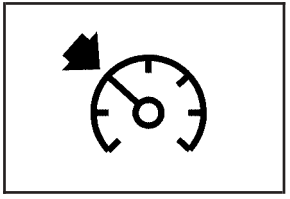

This symbol appears on your instrument panel whenever you set your cruise control. See “Cruise Control” under *Turn Signal/Multifunction Lever on page 3-5*.

Reduced Engine Power Light

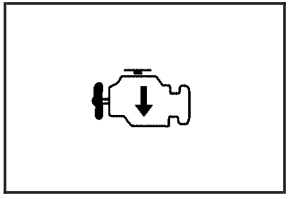

This light is displayed when a noticeable reduction in the vehicle’s performance may occur.

The vehicle may be driven at a reduced speed when the reduced engine power light is on but acceleration and speed may be reduced. The performance may be reduced until the next time you drive your vehicle. If this light stays on, see your dealer as soon as possible for diagnosis and repair.

This light may also come on if there is a problem with the Throttle Actuator Control (TAC) system. If this happens, take the vehicle in for service as soon as possible.

Highbeam On Light

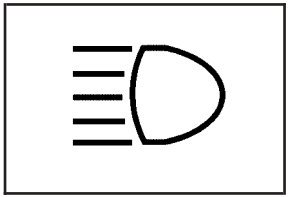

This light comes on whenever the high-beam headlamps are on.

Check Gages Warning Light

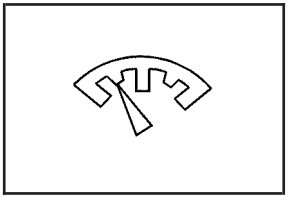

The Check Gages light will come on briefly when you are starting the engine.

If the light comes on and stays on while you are driving, check your coolant temperature and engine oil pressure gages to see if they are in the warning zones. See *Engine Coolant Temperature Gage on page 3-32* and *Oil Pressure Gage on page 3-36*.

When the fuel level is low in your vehicle, the check gages light will come on and a chime will sound. You will also see a FUEL LEVEL LOW message on the DIC. See *DIC Warnings and Messages on page 3-48* for more information.

Fuel Gage

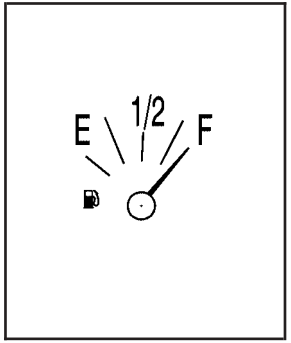

United States

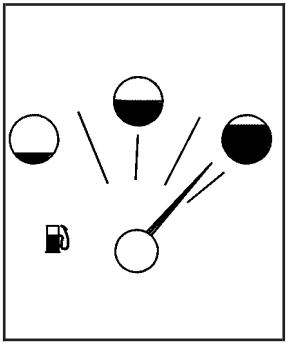

Canada

When the ignition is on, the fuel gage tells you about how much fuel you have remaining.

A chime will sound and the check gages warning light will come on when your fuel level is low. FUEL LEVEL LOW will appear on the DIC display. See *Check Gages Warning Light on page 3-39*, “Fuel Range” under *DIC Controls and Displays on page 3-44*, and *DIC Warnings and Messages on page 3-48* for more information.

Here are four things that some owners ask about. None of these show a problem with your fuel gage:

- At the gas station, the gas pump shuts off before the gage reads full.
- It takes a little more or less fuel to fill up than the gage indicated. For example, the gage may have indicated the tank was half full, but it actually took a little more or less than half the tank’s capacity to fill the tank.
- The gage moves a little when you turn a corner or speed up.
- The gage doesn’t go back to empty when you turn off the ignition.

Auxiliary Gage Package

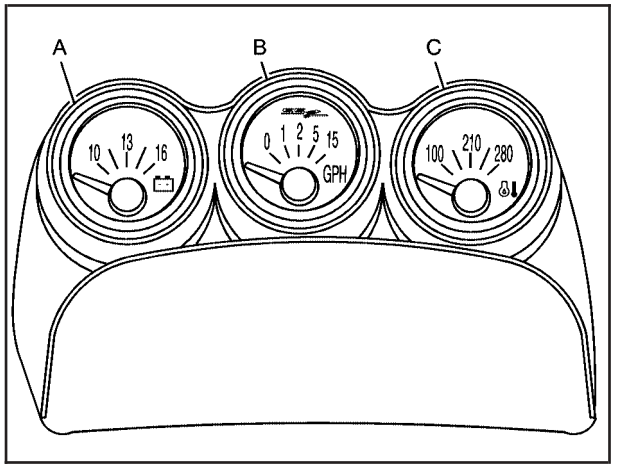

A. Voltmeter Gage

B. Instantaneous Fuel Consumption Gage

C. Transmission Temperature Gage

Your vehicle may have an auxiliary gage package located at the front of the center console.

Voltmeter Gage

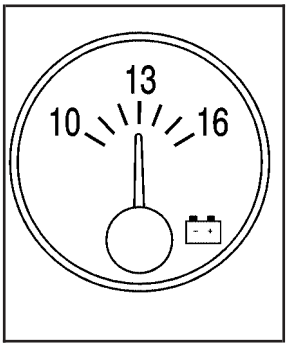

This gage (A) is located on the left side of the gage package.

When your engine is not running, but the ignition is in RUN, this gage shows your battery's state of charge in DC volts.

When the ignition is on and the engine is running, the gage shows the condition of the charging system. Readings between the low and high warning zones indicate the normal operating range.

Readings in the low warning zone may occur when a large number of electrical accessories are operating in the vehicle and the engine is left at an idle for an extended period. This condition is normal since the charging system is not able to provide full power at engine idle. As engine speeds are increased, this condition should correct itself as higher engine speeds allow the charging system to create maximum power.

You can only drive for a short time with the reading in either warning zone. If you must drive while the gage is in the warning zone, turn off all unnecessary accessories.

Readings in either warning zone indicate a possible problem in the electrical system. Have the vehicle serviced as soon as possible.

Instantaneous Fuel Consumption Gage

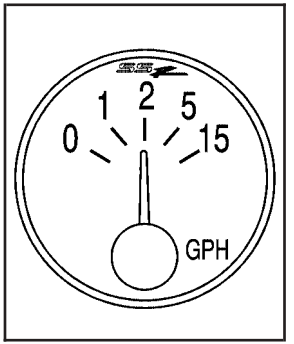

This gage (B) is located in the center of the gage package.

The instantaneous fuel consumption gage shows the rate of fuel that is being used in gallons per hour (gph).

Transmission Temperature Gage

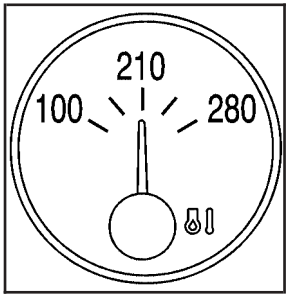

This gage (C) is located on the right side of the gage package.

When your ignition is on, the gage shows the temperature of the transmission fluid. The normal operating range is from 100°F (38°C) to about 265°F (130°C).

At approximately 265°F (130°C), the transmission will enter a transmission protection mode. When the transmission enters the protection mode, you may notice a change in the transmission shifting patterns. The transmission will return to normal shifting patterns when the transmission fluid temperature falls below 260°F (127°C).

Pull the vehicle off the roadway when it is safe to do so. Set the parking brake, place the transmission in PARK (P) and allow the engine to idle until the transmission temperature falls below 260°F (127°C). If the transmission continues to operate above 260°F (127°C), see your dealer for service or contact GM Roadside Assistance. See *Roadside Assistance Program on page 7-6*.

Notice: **If you drive your vehicle with the transmission temperature gage above normal operating range, you can damage the transmission. This could lead to costly repairs that would not be covered by your warranty. Do not drive your vehicle while the transmission temperature gage reading is above normal. See your dealer for service.**

The following situations can cause the transmission to operate at higher temperatures:

- Towing a trailer
- Hot outside air temperatures
- Hauling a large or heavy load
- Low transmission fluid level
- High transmission fluid level
- Engine overheating

A temporary solution to hotter transmission operating temperatures may be to let the transmission cool down. If the transmission is operated at higher temperatures on a frequent basis, see *Scheduled Maintenance on page 6-4* for the proper transmission maintenance intervals.

Driver Information Center (DIC)

The Driver Information Center (DIC) gives you the status of many of your vehicle's systems. It is also used to display driver personalization features and warning/status messages. The DIC display is located on the instrument panel cluster. The DIC buttons are located on the steering wheel.

The DIC comes on when the ignition is on. After a short delay the DIC will display the current driver and the information that was last displayed before the engine was turned off.

If a problem is detected, a warning message will appear on the display. Be sure to take any message that appears on the display seriously and remember that clearing the message will only make the message disappear, not correct the problem.

DIC Controls and Displays

The DIC has different modes which can be accessed by pressing the four buttons located on the steering wheel. The button functions are listed in the following pages.

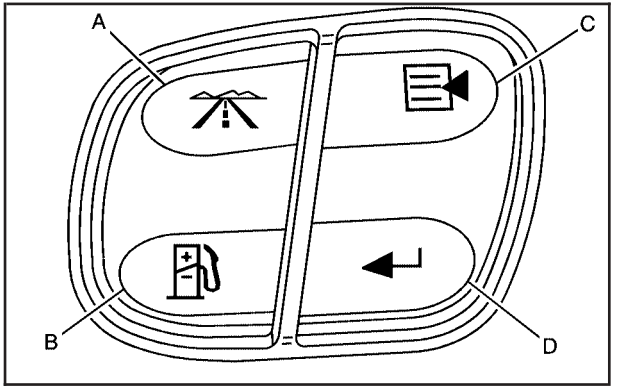

A. **(Trip Information)**: Press this button to display the odometer, trip odometer, and the timer.

B. **(Fuel Information)**: Press this button to display the current fuel and engine oil information.

C. **(Personalization)**: Press this button to access the vehicle personalization menu and customize the personalization settings on your vehicle.

D. **(Select)**: Press this button to reset certain DIC functions, acknowledge DIC warning messages and clear them from the DIC, and set your personalization settings.

Trip Information

(Trip Information): Press this button to scroll through the odometer, TRIP A, TRIP B, and TIMER.

Odometer

Press the trip information button until the odometer appears on the display. This shows the total distance the vehicle has been driven in either miles or kilometers.

Trip Odometer

Press the trip information button until TRIP A or TRIP B is displayed. This shows the current distance traveled since the last reset for each trip odometer in either miles or kilometers. Both odometers can be used at the same time.

Each trip odometer can be reset to zero separately by pressing and holding the select button while the desired trip odometer is displayed.

Timer

The DIC can be used as a stopwatch. Press the trip information button until TIMER is displayed. Press the select button to start the timer. The display will show the amount of time that has passed since the timer was last reset (not including time the ignition is off). Time will continue to be counted as long as the ignition is on, even if another display is being shown on the DIC. The timer will record up to 99 hours, 59 minutes and 59 seconds (99:59:59) after which the display will roll back to zero.

To stop the counting of time, press the select button briefly while TIMER is displayed.

To reset the timer to zero, press and hold the select button while TIMER is displayed.

Fuel Information

(Fuel Information): Press this button to scroll through the range, average fuel economy, instant fuel economy and engine oil life.

Fuel Range

Press the fuel information button until RANGE appears to display the remaining distance you can drive without refueling. It's based on fuel economy and the fuel remaining in the tank. The display will show FUEL LEVEL LOW if the fuel level is low and a chime will sound. The check gages warning light on the instrument panel cluster will also be illuminated. See *Check Gages Warning Light on page 3-39* for more information.

The fuel economy data used to determine fuel range is an average of recent driving conditions. As your driving conditions change, this data is gradually updated. Fuel range cannot be reset.

Average Fuel Economy

Press the fuel information button until AVG. ECON appears in the display. Average fuel economy is how many miles per gallon your vehicle is getting based on current and past driving conditions.

Press and hold the select button while AVG. ECON is displayed to reset the average fuel economy. Average fuel economy will then be calculated starting from that point. If the average fuel economy is not reset, it will be continually updated each time you drive.

Instant Fuel Economy

Press the fuel information button until INST. ECON appears in the display. Instant fuel economy is how many miles per gallon your vehicle is at the particular moment in time. The instant fuel economy cannot be reset.

Engine Oil Life

Press the fuel information button until ENGINE OIL LIFE appears in the display. The GM Oil Life System™ shows an estimate of the oil's remaining useful life. It will show 100% when the system is reset after an oil change. It will alert you to change your oil on a schedule consistent with your driving conditions.

Always reset the engine oil life after an oil change. To reset the engine oil life system, press and hold the select button while ENGINE OIL LIFE is displayed.

The engine oil life reading in the DIC does not replace the need to maintain your vehicle as recommended in the Maintenance Schedule in this manual. See *Engine Oil on page 5-13*, *Change Engine Oil Light on page 3-37*, and *Scheduled Maintenance on page 6-4*.

Personalization

(Personalization): Press this button to access the vehicle personalization menu and customize the personalization settings on your vehicle. See *DIC Vehicle Personalization on page 3-55* for more information.

Select

(Select): Press this button to reset certain DIC functions, acknowledge DIC warning messages and clear them from the DIC, and set your personalization settings.

DIC Warnings and Messages

Messages are displayed on the DIC to notify the driver that the status of the vehicle has changed and that some action may be needed by the driver to correct the condition. Multiple messages may appear one after another. Some messages may not require immediate action but you should press the select button to acknowledge that you received the message and clear it from the display. Some messages cannot be cleared from the display because they are more urgent. These messages require action before they can be removed from the DIC display. The following are the possible messages that can be displayed and some information about them.

Battery Not Charging

If the battery is not charging during operation, this message will appear on the DIC. The charging system light may also be displayed on the instrument panel cluster. See *Charging System Light on page 3-29* for more information. Driving your vehicle when the battery is not charging properly can drain the battery. Have the electrical system checked as soon as possible. Press the select button to acknowledge this message and clear it from the DIC display.

Battery Voltage Too High

This message will be displayed when the battery voltage is higher than normal and you try to raise or lower the convertible top. The charging system light may also be displayed on the instrument panel cluster. See *Charging System Light on page 3-29* for more information. Press the select button to acknowledge the message and clear it from the DIC display.

Battery Voltage Too Low

This message will be displayed when the battery voltage is lower than normal and you try to raise or lower the convertible top. The charging system light may also be displayed on the instrument panel cluster. See *Charging System Light on page 3-29* for more information. Press the select button to acknowledge the message and clear it from the DIC display.

Cargo Cover Ajar

This message will be displayed when trying to open or close the convertible top while the cargo cover is open. Make sure the cargo cover is fully closed before trying to open or close the convertible top. This message will clear itself from the DIC once the cargo cover is closed.

Change Trans (Transmission) Fluid

If your transmission fluid in your vehicle needs to be changed, this message will appear on the DIC. See *Automatic Transmission Fluid on page 5-20* and *Scheduled Maintenance on page 6-4* for more information.

Check Oil Level

If the oil level in the vehicle is low this message will appear on the DIC. Check the oil level and add oil as necessary. See *Engine Oil on page 5-13* for more information. Press the select button to acknowledge this message and clear it from the DIC display.

Depress Brake

This message will be displayed on the DIC when you try to raise or lower the convertible top without first pressing the brake pedal. The brake pedal must be pressed in order to operate the convertible top. See *Convertible Top on page 2-45* for more information. Pressing the brake pedal will clear the message, or you can press the select button to acknowledge and clear the message from the DIC display.

Driver Door Ajar

This message will be displayed on the DIC when the driver's door was not closed completely. A chime will sound. Stop the vehicle, check the door for obstacles, and close the door again. Fully closing the driver's door will clear this message from the display, or you can press the select button to acknowledge the message and clear it from the DIC display.

Engine Coolant Hot Idle Engine

Notice: **If your engine catches fire because you keep driving with no coolant, your vehicle can be badly damaged. The costly repairs would not be covered by your warranty.**

If the cooling system temperature becomes too hot, this message will appear in the DIC and you will hear a chime. Stop the vehicle and let the engine idle in PARK (P) to allow the coolant to reach a safe temperature. You may need to add more coolant to your vehicle before driving again. See *Engine Coolant on page 5-23* and *Engine Coolant Temperature Gage on page 3-32* for more information. This message will clear from the DIC display when the coolant temperature drops to a safe operating temperature.

Engine Overheated Stop Engine

Notice: **If your engine catches fire because you keep driving with no coolant, your vehicle can be badly damaged. The costly repairs would not be covered by your warranty.**

If your engine is overheated, this message will be displayed on the DIC. Stop the vehicle as soon as possible and do not drive it until the engine cools down. You may need to add more coolant to your vehicle before driving again. See *Engine Overheating on page 5-26* and *Engine Coolant Temperature Gage on page 3-32* for more information. This message will clear from the DIC display when the coolant temperature drops to a safe operating temperature.

Flip Hall Switch Fault

This message will be displayed on the DIC when trying to raise or lower the convertible top and there is a fault with this switch. If the message persists, see your dealer for service.

Fuel Level Low

If the fuel level is low in the vehicle's gas tank this message will appear on the DIC and you will hear a chime. You will also see the check gages warning light on the instrument panel cluster. See *Check Gages Warning Light on page 3-39* for more information. Refuel as soon as possible. See *Filling Your Tank on page 5-7* and *Fuel Gage on page 3-40* for more information. Press the select button to acknowledge and clear the message from the display.

Hdr (Header) Latch Switch Fault

This message will be displayed on the DIC when trying to raise or lower the convertible top and there is a fault with this switch. If the message persists, see your dealer for service.

Manually Open Tonneau

This message will be displayed on the DIC when trying to raise or lower the convertible top while the convertible top and roof tonneau are where the system cannot verify their position. The roof system may need to be restored manually to a stable position by fully opening the roof tonneau and boot cover panel. See *Convertible Top on page 2-45* for more information.

Oil Pressure Low Stop Engine

⚠ CAUTION:

Do not keep driving if the oil pressure is low. If you do, your engine can become so hot that it catches fire. You or others could be burned. Check your oil as soon as possible and have your vehicle serviced.

Notice: **Lack of proper engine oil maintenance may damage the engine. The repairs would not be covered by your warranty. Always follow the maintenance schedule in this manual for changing engine oil.**

If the oil pressure is low in your vehicle, this message will be displayed on the DIC. Stop the vehicle as soon as possible and do not drive it until the cause of the low oil pressure has been corrected. Check your oil as soon as possible and have your vehicle serviced. See *Engine Oil on page 5-13* and *Oil Pressure Gage on page 3-36* for more information.

Passenger Door Ajar

If the passenger's door is not fully closed, this message will appear on the display and you will hear a chime. Stop the vehicle, check the door for obstacles, and close the door again. Fully closing the passenger's door will clear this message from the display, or you can press the select button to acknowledge the message and clear it from the DIC display.

Put Vehicle in Park

This message will be displayed on the DIC when attempting to release the cargo cover when the vehicle is not in PARK (P). The vehicle must stopped and the transmission placed in PARK (P) to release the cargo cover. See *Cargo Cover on page 2-31* for more information.

Reduce Speed

This message will be displayed on the DIC when trying to raise or lower the convertible top while the vehicle is in motion. Stop the vehicle and continue pressing the brake pedal before trying to raise or lower the top again. See *Convertible Top on page 2-45* for more information. The message will clear from the display once the vehicle is stopped, or you can press the select button to acknowledge this message and clear it from the DIC display.

Rfa X Battery Low

If a remote keyless entry transmitter battery is low, this message will appear on the DIC. The battery needs to be replaced in the transmitter. Press the select button to acknowledge this message and clear it from the DIC display. See "Battery Replacement" under *Remote Keyless Entry System Operation on page 2-4* for battery replacement instructions.

Roof Ajar

This message will be displayed on the DIC when trying to release the cargo cover and the convertible top is not fully open or closed. Make sure your convertible top is in the full-closed or full-open position before trying to release your cargo cover. See *Convertible Top on page 2-45* and *Cargo Cover on page 2-31* for more information. This message will clear once the convertible top is open or closed, or you can press the select button to acknowledge the message and clear it from the DIC display.

Roof Cycle Timeout

This message will be displayed on the DIC when the convertible top has not completed its movement from one position to another within the programmed time limit.

Notice: **If you operate the convertible top switch continuously while the ignition is in ACCESSORY, the battery will drain and you might not be able to start your vehicle. Do not use the convertible top switch for extended periods of time when the ignition is in ACCESSORY.**

When this message appears, the convertible top will stop moving. Release the convertible top switch and make sure there is nothing blocking the path of the top. If the path is clear, turn the ignition off and on again. Then press the convertible top switch again. See *Convertible Top on page 2-45* for more information.

Roof Hall Switch Fault

This message will be displayed on the DIC when trying to raise or lower the convertible top and there is a fault with this switch. If the message persists, see your dealer for service.

Service Air Bag

If there is a problem with the air bag system this message will be displayed on the DIC. The air bag readiness light may also be displayed on the instrument panel cluster. See your dealer for service. Press the select button to acknowledge this message and clear it from the display. See *Servicing Your Air Bag-Equipped Vehicle on page 1-55* and *Air Bag Readiness Light on page 3-26* for more information.

Service Brake System

If a problem occurs with the brake system this message will appear on the DIC. The brake system warning light and the anti-lock brake system warning light may also be displayed on the instrument panel cluster. See *Brake System Warning Light on page 3-30* and *Anti-Lock Brake System Warning Light on page 3-31* for more information. If this message appears, stop as soon as possible and turn off the vehicle. Restart the vehicle and check for the message on the DIC display. If the message is still displayed, or appears again when you begin driving, the brake system needs service. See *Brakes on page 5-33* for more information. Press the select button to acknowledge this message and clear it from the display.

Stop Vehicle

This message will be displayed when attempting to release the cargo cover while the vehicle is in motion. The vehicle must stopped and the transmission placed in PARK (P) to release the cargo cover. See *Cargo Cover on page 2-31* for more information.

Tlat (Tonneau Latch) Hall Switch Fault

This message will be displayed when trying to raise or lower the convertible top and there is a problem with this switch. If the message persists, see your dealer for service.

Tonn (Tonneau) Hall Switch Fault

This message will be displayed when trying to raise or lower the convertible top and there is a fault with this switch. If the message persists, see your dealer for service.

Tonn (Tonneau) Latd (Latched) Switch Fault

This message will be displayed when trying to raise or lower the convertible top and there is a fault with this switch. If the message persists, see your dealer for service.

Traction Active

This message, along with the light on the Traction Control System (TCS) warning light on the instrument panel cluster, will be displayed when the TCS system is active. Press the select button to acknowledge this message and clear it from the DIC display. See *Traction Control System (TCS) on page 4-9* and *Traction Control System (TCS) Warning Light on page 3-31* for more information.

Trans (Transmission) Hot Idle

If the transmission fluid in the vehicle becomes too hot, this message will appear on the DIC. Stop the vehicle and let it idle to allow the transmission fluid to cool. This message will clear when the fluid temperature reaches a safe level. See *Automatic Transmission Fluid on page 5-20* and if your vehicle is equipped with the auxiliary gage package, see “Transmission Temperature Gage” under *Auxiliary Gage Package on page 3-41* for more information.

Turn Signal On

If a turn signal is left on for 3/4 mile (1.2 km), this message will appear on the display and you will hear a chime. Move the turn signal/multifunction lever to the off position. Press the select button to acknowledge this message and clear it from the display. See *Turn Signal/Multifunction Lever on page 3-5* for more information.

Unknown Speed

This message will be displayed when trying to raise or lower the convertible top and the roof controller cannot communicate with the Powertrain Control Module (PCM). See your dealer for service.

DIC Vehicle Personalization

Your vehicle has a personalization feature that allows you to program certain features to a preferred setting for up to two drivers. The number of programmable features varies depending upon which model of the vehicle you purchased. Once the features are programmed, the saved settings are recalled by pressing the unlock button on the remote keyless entry transmitter, 1 or 2, or by pressing the appropriate memory button, 1 or 2, located on the outboard side of the driver's seat. See *Memory Seat on page 2-52* for more information.

The following is a list of available programmable options:

- AUTOMATIC LOCKING
- AUTOMATIC UNLOCKING
- REMOTE LOCK FEEDBACK
- REMOTE UNLOCK FEEDBACK
- HEADLAMPS ON AT EXIT
- PERIMETER LIGHTING
- SEAT POSITION RECALL (If equipped)
- DISPLAY LANGUAGE
- DISPLAY UNITS (U.S./MET)

(Personalization): Press this button located on the steering wheel to access the vehicle personalization menu and customize the personalization settings on your vehicle.

Automatic Locking

This feature allows you to choose how the vehicle's doors are locked. Press the personalization button until AUTOMATIC LOCKING appears in the display. To access the modes for AUTOMATIC LOCKING, press the select button. Once AUTOMATIC LOCKING is selected, press the select button to scroll through the following modes:

Mode 1: LOCK DOORS OUT OF PARK

Mode 2: LOCK DOORS WITH SPEED

If you choose Mode 1, the doors will lock when the vehicle is shifted out of PARK (P).

If you choose Mode 2, the doors will lock when the vehicle speed is above 8 mph (13 km/h) for three seconds.

Scroll through the list of modes. When the mode you want is displayed on the DIC, press personalization button to set your choice, return to the personalization menu, and advance to the next programmable feature.

For more information on automatic door locks see *Programmable Automatic Door Locks on page 2-8*.

Automatic Unlocking

This feature allows you to choose how the vehicle's doors are unlocked. Press the personalization button until AUTOMATIC UNLOCKING appears in the display. To access the modes for AUTOMATIC UNLOCKING, press the select button. Once AUTOMATIC UNLOCKING is selected, press the select button to scroll through the following modes:

Mode 1: UNLOCK ALL IN PARK

Mode 2: UNLOCK ALL AT KEY OUT

Mode 3: UNLOCK DRIVER IN PARK

Mode 4: UNLOCK DOORS MANUALLY

If you choose Mode 1, all of the doors will unlock when the vehicle is shifted into PARK (P).

If you choose Mode 2, all of the doors will unlock when the key is taken out of the ignition.

If you choose Mode 3, the driver's door ill be unlocked when the vehicle is shifted into PARK (P).

If you choose Mode 4, the doors will not be unlocked automatically.

Scroll through the list of modes. When the mode you want is displayed on the DIC, press personalization button to set your choice, return to the personalization menu, and advance to the next programmable feature.

For more information on automatic door locks see *Programmable Automatic Door Locks on page 2-8*.

Remote Lock Feedback

This feature allows you to choose whether or not the horn honks and the parking lamps flash when you lock the vehicle with the remote keyless entry transmitter. Press the personalization button until REMOTE LOCK FEEDBACK appears in the display. To access the modes for REMOTE LOCK FEEDBACK, press the select button. Once REMOTE LOCK FEEDBACK is selected, press the select button to scroll through the following modes:

Mode 1: LOCK FEEDBACK: BOTH

Mode 2: LOCK FEEDBACK: OFF

Mode 3: LOCK FEEDBACK: HORN

Mode 4: LOCK FEEDBACK: LAMPS

If you choose Mode 1, the parking lamps will flash each time you press the lock button on the remote keyless entry transmitter and the horn will chirp the second time you press the lock button.

If you choose Mode 2, there will be no feedback when locking the vehicle.

If you choose Mode 3, the horn will chirp the second time you press the button with the lock symbol on the remote keyless entry transmitter.

If you choose Mode 4, the parking lamps will flash each time you press the button with the lock symbol on the remote keyless entry transmitter.

Scroll through the list of modes. When the mode you want is displayed on the DIC, press personalization button to set your choice, return to the personalization menu, and advance to the next programmable feature.

Remote Unlock Feedback

This feature allows you to choose whether or not the parking lamps flash and the horn honks when you unlock the vehicle with the remote keyless entry transmitter. Press the personalization button until REMOTE UNLOCK FEEDBACK appears in the display. To access the modes for REMOTE UNLOCK FEEDBACK, press the select button. Once REMOTE UNLOCK FEEDBACK is selected, press the select button to scroll through the following modes:

Mode 1: UNLOCK FEEDBACK: BOTH

Mode 2: UNLOCK FEEDBACK: OFF

Mode 3: UNLOCK FEEDBACK: HORN

Mode 4: UNLOCK FEEDBACK: LAMPS

If you choose Mode 1, the parking lamps will flash each time you press the button with the unlock symbol on the remote keyless entry transmitter. The horn will chirp the second time you press the unlock button.

If you choose Mode 2, there will be no feedback when unlocking the vehicle.

If you choose Mode 3, the horn will chirp the second time you press the button with the unlock symbol on the remote keyless entry transmitter.

If you choose Mode 4, the parking lamps will flash each time you press the button with the unlock symbol on the remote keyless entry transmitter.

Scroll through the list of modes. When the mode you want is displayed on the DIC, press personalization button to set your choice, return to the personalization menu, and advance to the next programmable feature.

Headlamps on at Exit

This feature allows you to set the amount of time you want the headlamps to remain on after you exit the vehicle. Press the personalization button until HEADLAMPS ON AT EXIT appears in the display. To access the modes for HEADLAMPS ON AT EXIT, press the select button. Once HEADLAMPS ON AT EXIT is selected, press the select button to scroll through the following modes:

Mode 1: HEADLAMP DELAY: 10 SEC

Mode 2: HEADLAMP DELAY: 20 SEC

Mode 3: HEADLAMP DELAY: 40 SEC

Mode 4: HEADLAMP DELAY: 60 SEC

Mode 5: HEADLAMP DELAY: 120 SEC

Mode 6: HEADLAMP DELAY: 180 SEC

Mode 7: HEADLAMP DELAY: OFF

If you choose Mode 7, the headlamps will turn off as soon as you turn off the vehicle.

Scroll through the list of modes. When the mode you want is displayed on the DIC, press personalization button to set your choice, return to the personalization menu, and advance to the next programmable feature.

Perimeter Lighting

This feature allows you to choose whether or not certain exterior lamps turn on when the unlock button on the remote keyless entry transmitter is pressed. Press the personalization button until PERIMETER LIGHTING appears in the display. To access the modes for PERIMETER LIGHTING, press the select button. Once PERIMETER LIGHTING is selected, press the select button to scroll through the following modes:

Mode 1: PERIMETER LIGHTING ON

Mode 2: PERIMETER LIGHTING OFF

If you choose Mode 1, the headlamps and back-up lamps will come on for 40 seconds, if it is dark enough outside, when you unlock the vehicle with the remote keyless entry transmitter.

Scroll through the list of modes. When the mode you want is displayed on the DIC, press personalization button to set your choice, return to the personalization menu, and advance to the next programmable feature.

Seat Position Recall

This feature allows you to choose how any previously programmed seat position is recalled. Press the personalization button until SEAT POSITION RECALL appears in the display. To access the modes for SEAT POSITION RECALL, press the select button. Once SEAT POSITION RECALL is selected, press the select button to scroll through the following modes:

Mode 1: SEAT POSITION RECALL OFF

Mode 2: SEAT POSITION RECALL AT KEY IN

Mode 3: SEAT POSITION RECALL ON REMOTE

If you choose Mode 1, the memory seat position you saved will only be recalled when the memory button 1 or 2 is pressed.

If you choose Mode 2, the memory seat position you saved will be recalled when you put the key in the ignition.

If you choose Mode 3, the memory seat position you saved will be recalled when you unlock the vehicle with the remote keyless entry transmitter.

Scroll through the list of modes. When the mode you want is displayed on the DIC, press personalization button to set your choice, return to the personalization menu, and advance to the next programmable feature. See *Memory Seat on page 2-52* for more information.

Display Language

This feature allows you to choose the language in which the DIC information will be displayed. Press the select button until DISPLAY LANGUAGE appears on the DIC. Once DISPLAY LANGUAGE is selected, press the select button to scroll through the following modes:

Mode 1: ENGLISH

Mode 2: FRANCAIS (French)

Mode 3: ESPANOL (Spanish)

When the language you desire is displayed on the DIC, press personalization button to set your choice, return to the personalization menu, and advance to the next programmable feature.

If you accidentally choose a language that you don't want, press and hold the personalization button and the trip information button at the same time. The DIC will begin scrolling through the languages in their particular language. English will be in English, French will be in French and so on. When you see the language that you would like, release both buttons. The DIC will then display the information in the language you chose.

Display Units (U.S./MET)

The feature allows you to choose the measurement units. Press the personalization button until DISPLAY UNITS appears in the display. To access the modes for DISPLAY UNITS, press the select button. Once DISPLAY UNITS is selected, press the select button to scroll through the following modes:

Mode 1: UNITS: U.S. (ENGLISH)

Mode 2: UNITS: METRIC (km/L)

Mode 3: UNITS: METRIC (L/100km)

If you choose Mode 1, all information will be displayed in English units.

If you choose Mode 2 or 3, all information will be displayed in metric units.

Scroll through the list of modes. When the mode you want is displayed on the DIC, press personalization button to set your choice, return to the personalization menu, and advance to the next programmable feature.

Audio System(s)

Notice: **Before adding any sound equipment to your vehicle, like a tape player, CB radio, mobile telephone, or two-way radio, make sure that it can be added by checking with your dealer. Also, check federal rules covering mobile radio and telephone units. If sound equipment can be added, it is very important to do it properly. Added sound equipment may interfere with the operation of your vehicle's engine, radio, or other systems, and even damage them. Your vehicle's systems may interfere with the operation of sound equipment that has been added improperly.**

Figure out which audio system is in your vehicle, find out what your audio system can do, and how to operate all of its controls.

Setting the Time

The radio may have a button marked with an H or HR to represent hours and an M or MN to represent minutes.

Press and hold the hour button until the correct hour appears on the display. AM or PM will appear on the display for morning or evening hours. Press and hold the minute button until the correct minute appears on the display. The time can be set with the ignition on or off.

To synchronize the time with an FM station broadcasting Radio Data System (RDS) information, press and hold the hour and minute buttons at the same time for two seconds until UPDATED and the clock symbol appear on the display. If the time is not available from the station, NO UPDAT will appear on the display.

RDS time is broadcast once a minute. After tuning to an RDS broadcast station, it may take a few minutes for the time to update.

Radio with CD

Playing the Radio

PWR (Power): Press this knob to turn the system on and off.

VOL (Volume): Turn this knob to increase or to decrease volume.

AUTO VOL (Automatic Volume): With automatic volume, your audio system will adjust automatically to make up for road and wind noise as you drive by increasing the volume as vehicle speed increases.

Set the volume at the desired level. Press this button to select LOW, MEDIUM, or HIGH. AVOL will appear on the display. Each higher setting will provide more volume compensation as vehicle speed increases. To turn automatic volume off, press this button until AVOL OFF appears on the display.

DISP (Display): Press this knob to switch the display between the radio station frequency and the time. Time display is available with the ignition turned off.

For RDS, press this knob to change what appears on the display while using RDS. The display options are station name, RDS station frequency, PTY, and the name of the program (if available).

To change the default on the display, press this knob until you see the display you want, then hold the knob for two seconds. The radio will produce one beep and selected display will now be the default.

Finding a Station

BAND: Press this button to switch between FM1, FM2, or AM. The display will show your selection.

TUNE: Turn this knob to select radio stations.

◀ **SEEK** ▶ **:** Press the right or the left arrow to go to the next or to the previous station and stay there.

The radio will seek only to stations that are in the selected band and only to those with a strong signal.

◀ **SCAN** ▶ **:** Press and hold either arrow for more than two seconds. SCAN will appear on the display and you will hear a beep. The radio will go to a station, play for a few seconds, then go on to the next station. Press either arrow again to stop scanning.

To scan preset stations, press and hold either arrow for more than four seconds. PSCN will appear on the display and you will hear two beeps. The radio will go to the first preset station, play for a few seconds, then go on to the next preset station. Press either arrow again or one of the pushbuttons to stop scanning.

The radio will scan only to stations that are in the selected band and only to those with a strong signal.

Setting Preset Stations

The six numbered pushbuttons let you return to your favorite stations. You can set up to 18 stations (six FM1, six FM2, and six AM), by performing the following steps:

1. Turn the radio on.
2. Press BAND to select FM1, FM2, or AM.
3. Tune in the desired station.
4. Press AUTO EQ to select the equalization.
5. Press and hold one of the six numbered pushbuttons. The radio will produce one beep. Whenever you press that numbered pushbutton, the station you set will return and the equalization that you selected will be automatically stored for that pushbutton.
6. Repeat the steps for each pushbutton.

Setting the Tone (Bass/Treble)

AUDIO: Push and release the AUDIO knob until BASS or TREB appears on the display. Turn the knob to increase or to decrease. The display will show the bass or treble level. If a station is weak or noisy, you may want to decrease the treble.

To adjust the bass and treble to the middle position, push and hold the AUDIO knob. The radio will produce one beep and adjust the display level to the middle position.

To adjust all tone and speaker controls to the middle position, push and hold the AUDIO knob when no tone or speaker control is displayed. ALL will appear on the display, you will hear a beep, and the display level will be adjusted to the middle position.

AUTO EQ (Automatic Equalization): Press this button to select customized equalization settings designed for country/western, jazz, talk, pop, rock, and classical. Selecting CUSTOM or changing bass or treble, returns the EQ to the manual bass and treble settings.

The radio will save separate AUTO EQ settings for each preset and source.

Adjusting the Speakers (Balance/Fade)

AUDIO: To adjust the balance to the right and the left speakers, push and release the AUDIO knob until BAL appears on the display. Turn the knob to move the sound toward the right or the left speakers.

To adjust the fade to the front and the rear speakers, push and release the AUDIO knob until FADE appears on the display. Turn the knob to move the sound toward the front or the rear speakers.

To adjust the balance and fade to the middle position, push the AUDIO knob, then push it again and hold it until the radio produces one beep. The balance and fade will be adjusted to the middle position and the display will show the speaker balance.

To adjust all tone and speaker controls to the middle position, push and hold the AUDIO knob when no tone or speaker control is displayed. ALL will appear on the display, you will hear a beep, and the display level will be adjusted to the middle position.

Radio Data System (RDS)

Your audio system is equipped with a Radio Data System (RDS). RDS features are available for use only on FM stations that broadcast RDS information.

With RDS, your radio can do the following:

- Seek to stations broadcasting the selected type of programming
- Receive announcements concerning local and national emergencies
- Display messages from radio stations
- Seek to stations with traffic announcements

This system relies upon receiving specific information from these stations and will only work when the information is available. In rare cases, a radio station may broadcast incorrect information that will cause the radio features to work improperly. If this happens, contact the radio station.

While you are tuned to an RDS station, the station name or the call letters will appear on the display instead of the frequency. RDS stations may also provide the time of day, a program type (PTY) for current programming, and the name of the program being broadcast.

Finding a Program Type (PTY) Station

To select and find a desired PTY perform the following:

1. Turn the P-TYPE LIST knob to activate program type select mode. TYPE and a PTY will appear on the display.
2. Turn the P-TYPE LIST knob to select a PTY.
3. Once the desired PTY is displayed, press the SEEK TYPE button or either SEEK arrow to take you to the PTY's first station.
4. If you want to go to another station within that PTY and the PTY is displayed, press the SEEK TYPE button once. If the PTY is not displayed, press the SEEK TYPE button twice to display the PTY and then to go to another station.
5. Press the P-TYPE LIST knob to exit program type select mode.

   If PTY times out and is no longer on the display, go back to Step 1.

If both PTY and TRAF are on, the radio will search for stations with the selected PTY and traffic announcements.

If the radio cannot find the desired program type, NONE will appear on the display and the radio will return to the last station you were listening to.

SCAN: You can also scan through the channels within a PTY by performing the following:

1. Turn the P-TYPE LIST knob to activate program type select mode. TYPE and a PTY will appear on the display.
2. Turn the P-TYPE LIST knob to select a PTY.
3. Once the desired PTY is displayed, press either SCAN arrow, and the radio will begin scanning the stations in the PTY.
4. Press either SCAN arrow to stop scanning.

If both PTY and TRAF are on, the radio will scan for stations with the selected PTY and traffic announcements.

BAND (Alternate Frequency): Alternate frequency allows the radio to switch to a stronger station with the same program type. To turn alternate frequency on, press and hold BAND for two seconds. AF ON will appear on the display. The radio may switch to stronger stations.

To turn alternate frequency off, press and hold BAND again for two seconds. AF OFF will appear on the display. The radio will not switch to other stations.

Setting Preset PTYs

The six numbered pushbuttons let you return to your favorite PTYs. These buttons have factory PTY presets. You can set up to 12 PTYs (six FM1 and six FM2) by performing the following steps:

1. Press BAND to select FM1 or FM2.
2. Turn the P-TYPE LIST knob to activate program type select mode. TYPE and a PTY will appear on the display.
3. Turn the P-TYPE LIST knob to select a PTY.
4. Press and hold one of the six numbered pushbuttons until you hear a beep. Whenever you press that numbered pushbutton, the PTY you set will return.
5. Repeat the steps for each pushbutton.

RDS Messages

ALERT!: Alert warns of local or national emergencies. When an alert announcement comes on the current radio station, ALERT! will appear on the display. You will hear the announcement, even if the volume is muted or a CD is playing. If a CD is playing, play will stop during the announcement. You will not be able to turn off alert announcements.

ALERT! will not be affected by tests of the emergency broadcast system. This feature is not supported by all RDS stations.

INFO (Information): If the current station has a message, the information symbol will appear on the display. Press this button to see the message. The message may display the artist, song title, call in phone numbers, etc.

If the whole message is not displayed, parts of the message will appear every three seconds. To scroll through the message at your own speed, press the INFO button repeatedly. A new group of words will appear on the display with each press. Once the complete message has been displayed, the information symbol will disappear from the display until another new message is received. The old message can be displayed by pressing the INFO button. You can view an old message until a new message is received or a different station is tuned to.

When a message is not available from a station, NO INFO will appear on the display.

TRAF (Traffic): If TRAF appears on the display, the tuned station broadcasts traffic announcements and when a traffic announcement comes on the tuned radio station you will hear it.

If the current tuned station does not broadcast traffic announcements, press this button and the radio will seek to a station that does. When the radio finds a station that broadcasts traffic announcements, it will stop and TRAF will be displayed. When a traffic announcement comes on the tuned radio station you will hear it. If no station is found, NO TRAFFIC will appear on the display.

If TRAF is on the display you can press the TRAF button to turn off the traffic announcements.

Your radio will play the traffic announcement even if the volume is low. Your radio will interrupt the play of a CD if the last tuned station broadcasts traffic announcements.

Radio Messages

CAL ERR (Calibration Error): Your audio system has been calibrated for your vehicle from the factory. If CAL ERR appears on the display it means that your radio has not been configured properly for your vehicle and must be returned to the dealer for service.

LOCKED: This message is displayed when the Theftlock® system has locked up. Your vehicle must be returned to the dealer for service.

Playing a CD

Insert a CD partway into the slot, label side up. The player will pull it in and the CD should begin playing. The CD symbol will appear on the display. If you want to insert a CD with the ignition off, first press the eject button or the DISP knob.

As each new track starts to play, the track number will appear on the display.

If you turn off the ignition or radio with a CD in the player, it will stay in the player. When you turn on the ignition or radio, the CD will start playing, where it stopped, if it was the last selected audio source.

The CD player can play the smaller 8 cm single CDs with an adapter ring. Full-size CDs and the smaller CDs are loaded in the same manner.

If playing a CD-R the sound quality may be reduced due to CD-R quality, the method of recording, the quality of the music that has been recorded, and the way the CD-R has been handled. You may experience an increase in skipping, difficulty in finding tracks, and/or difficulty in loading and ejecting. If these problems occur try a known good CD.

Do not add paper labels to CDs, they could get caught in the CD player.

Do not play 3 inch CDs without a standard adapter CD.

If an error appears on the display, see “CD Messages” later in this section.

1 PREV (Previous): Press this pushbutton to go to the start of the current track if it has been playing for more than eight seconds. TRACK and the track number will appear on the display. If you hold this pushbutton or press it more than once, the player will continue moving backward through the CD.

2 NEXT: Press this pushbutton to go to the next track. TRACK and the track number will appear on the display. If you hold this pushbutton or press it more than once, the player will continue moving forward through the CD.

3 REV (Reverse): Press and hold this pushbutton to reverse quickly within a track. Press and hold this pushbutton for less than two seconds to reverse at six times the normal playing speed. Press and hold it for more than two seconds to reverse at 17 times the normal playing speed. Release the pushbutton to play the passage. ET and the elapsed time of the track will appear on the display.

4 FWD (Forward): Press and hold this pushbutton to advance quickly within a track. Press and hold this pushbutton for less than two seconds to advance at six times the normal playing speed. Press and hold it for more than two seconds to advance at 17 times the normal playing speed. Release the pushbutton to play the passage. ET and the elapsed time of the track will appear on the display.

6 RDM (Random): Press this pushbutton to hear the tracks in random, rather than sequential, order. RDM ON will appear on the display. RDM T and the track number will appear on the display when each track starts to play. Press this pushbutton again to turn off random play. RDM OFF will appear on the display.

◀ SEEK ▶ : Press the left arrow to go to the start of the current or to the previous track. Press the right arrow to go to the start of the next track. If you hold either arrow or press it more than once, the player will continue moving backward or forward through the CD.

◀ SCAN ▶ : To scan the CD, press and hold either SCAN arrow for more than two seconds until SCAN appears on the display and you hear a beep. The radio will go to the next track, play for 10 seconds, then go on to the next track. Press either SCAN arrow again, to stop scanning.

DISP (Display): Press this knob to see how long the current track has been playing. ET and the elapsed time will appear on the display. To change the default on the display (track or elapsed time), press the knob until you see the display you want, then hold the knob for two seconds. The radio will produce one beep and the selected display will now be the default.

BAND: Press this button to listen to the radio when a CD is playing. The inactive CD will remain safely inside the radio for future listening.

CD AUX (Auxiliary): Press this button to play a CD when listening to the radio.

⏏ **(Eject):** Press this button to stop a CD when it is playing or to eject a CD when it is not playing. Eject may be activated with either the ignition or radio off. CDs may be loaded with the radio and ignition off if this button is pressed first.

CD Messages

If the CD comes out, it could be for one of the following reasons:

- It is very hot. When the temperature returns to normal, the CD should play.
- You are driving on a very rough road. When the road becomes smooth, the CD should play.
- The CD is dirty, scratched, wet, or upside down.
- The air is very humid. If so, wait about an hour and try again.
- There may have been a problem while burning the CD.
- The label may be caught in the CD player.

If the CD is not playing correctly, for any other reason, try a known good CD.

If any error occurs repeatedly or if an error cannot be corrected, contact your dealer. If your radio displays an error message, write it down and provide it to your dealer when reporting the problem.

Radio with Six-Disc CD

Base Radio Shown, Bose® Similar

Playing the Radio

PWR (Power): Push this knob to turn the system on and off.

VOL (Volume): Turn this knob to increase or to decrease volume.

AUTO VOL (Automatic Volume): With automatic volume, your audio system will adjust automatically to make up for road and wind noise as you drive by increasing the volume as vehicle speed increases.

Set the volume at the desired level. Press this button to select LOW, MEDIUM, or HIGH. AVOL will appear on the display. Each higher setting will provide more volume compensation as vehicle speed increases. To turn automatic volume off, press this button until AVOL OFF appears on the display.

If your vehicle is equipped with Bose the system will have AudioPilot® noise compensation technology. AudioPilot monitors the level of noise in the vehicle and automatically increases or decreases the level of the audio to keep your audio above the noise.

To use this feature set the volume at the desires level. Press the AUTO VOL button until AVOL appears on the display. This feature works best at lower volume settings where background noise may be louder than the audio. At high volume settings, where the audio is much louder than the background noise, there will be no change in the audio level. To turn automatic volume off, press the AUTO VOL button until AVOL OFF appears on the display.

RCL (Recall): Press this knob to switch the display between the radio station frequency and the time. Press this knob with the ignition off to display the time.

To change the default on the display, press the knob until you see the display you want, then hold the knob for two seconds. The radio will produce one beep and the selected display will now be the default.

Finding a Station

AM FM: Press this button to switch between FM1, FM2, and AM. The display will show your selection.

TUNE: Turn this knob to select radio stations.

⊲ SEEK ⊳ : Press the right or the left arrow to go to the next or to the previous station and stay there.

The radio will seek only to stations that are in the selected band and only to those with a strong signal.

⊲ SCAN ⊳ : Press and hold either SCAN arrow for two seconds until SC appears on the display and you hear a beep. The radio will go to a station, play for a few seconds, then go on to the next station. Press either SCAN arrow again to stop scanning.

To scan preset stations, press and hold either SCAN arrow for more than four seconds. PRESET SCAN will appear on the display and you will hear a double beep. The radio will go to a preset station stored on your pushbuttons, play for a few seconds, then go on to the next preset station. Press either SCAN arrow again to stop scanning presets.

The radio will scan only to stations that are in the selected band and only to those with a strong signal.

Setting Preset Stations

The six numbered pushbuttons let you return to your favorite stations. You can set up to 18 stations (six FM1, six FM2, and six AM) by performing the following steps:

1. Turn the radio on.
2. Press AM FM to select FM1, FM2, or AM.
3. Tune in the desired station.
4. Press AUTO EQ to select the equalization.
5. Press and hold one of the six numbered pushbuttons until you hear a beep. Whenever you press that numbered pushbutton, the station you set will return and the equalization that you selected will be automatically stored for that pushbutton.
6. Repeat the steps for each pushbutton.

Setting the Tone (Bass/Treble)

AUDIO: Push the AUDIO knob until BASS, MID, or TREB appears on the display. Turn the knob to increase or to decrease. If a station is weak or noisy, you may want to decrease the treble.

To adjust bass, midrange, or treble to the middle position, select BASS, MID, or TREB and push and hold the AUDIO knob. The radio will produce one beep and adjust the display level to zero.

To adjust all tone and speaker controls to the middle position, push and hold the AUDIO knob when no tone or speaker control is displayed. CENTERED will appear on the display and you will hear a beep.

AUTO EQ (Automatic Equalization): Press this button to select customized equalization settings designed for country, jazz, talk, pop, rock, and classical.

To return to the manual mode, press the AUTO EQ button until CUSTOM appears on the display. Then you will be able to manually adjust the bass, midrange, and treble using the AUDIO knob.

If your vehicle is equipped with Bose®, your audio system allows you to choose from three different equalization settings: normal, driver, and spacious. These settings can be used while listening to the radio or the CD player.

NORMAL: This setting provides the best overall vehicle sound quality for all seating locations.

DRIVER: This setting gives the driver the best sound quality.

SPACIOUS: This setting makes the listening space seem larger.

The radio can save separate AUTO EQ settings for each preset and source.

The Bose system will automatically adjust the equalization to compensate for the change in acoustics when the convertible top is down. You will hear a momentary mute when the equalization switches just at the end of the top down cycle and just at the beginning of the top up cycle.

Adjusting the Speakers (Balance/Fade)

AUDIO: To adjust the balance between the right and the left speakers, push the AUDIO knob until BAL appears on the display. Turn the knob to move the sound toward the left or the right speakers.

To adjust the fade between the front and rear speakers, push and hold the AUDIO knob until FAD appears on the display. Turn the knob to move the sound toward the front or the rear speakers.

To adjust the balance and the fade to the middle position, select balance or fade and push and hold the AUDIO knob. The radio will beep once and will adjust the display level to the middle position.

To adjust all tone and speaker controls to the middle position, push and hold the AUDIO knob when no tone or speaker controls are displayed. CENTERED will appear on the display and you will hear a beep.

Radio Data System (RDS)

Your audio system is equipped with a Radio Data System (RDS). RDS features are available for use only on FM stations that broadcast RDS information.

With RDS, your radio can do the following:

- Seek to stations broadcasting the selected type of programming
- Receive announcements concerning local and national emergencies
- Display messages from radio stations
- Seek to stations with traffic announcements

This system relies upon receiving specific information from these stations and will only work when the information is available. In rare cases, a radio station may broadcast incorrect information that will cause the radio features to work improperly. If this happens, contact the radio station.

While you are tuned to an RDS station, the station name or the call letters will appear on the display instead of the frequency. RDS stations may also provide the time of day, a program type (PTY) for current programming, and the name of the program being broadcast.

Finding a Program Type (PTY) Station

To select and find a desired PTY perform the following:

1. Press the P-TYPE button to activate program type select mode. P-TYPE and the last selected PTY will appear on the display.
2. Turn the P-TYPE knob to select a PTY.
3. Once the desired PTY is displayed, press either SEEK arrow to select the PTY and take you to the PTY's first station.
4. If you want to go to another station within that PTY and the PTY is displayed, press either SEEK arrow once. If the PTY is not displayed, press either SEEK arrow twice to display the PTY and then to go to another station.
5. Press the P-TYPE button to exit program type select mode.

   If PTY times out and is no longer on the display, go back to Step 1.

If both P-TYPE and TRAF are on, the radio will search for stations with the selected PTY and traffic announcements.

To use the PTY interrupt feature, press and hold the P-TYPE button until you hear a beep on the PTY you want to interrupt with. When selected, an asterisk will appear beside that PTY on the display. You may select multiple interrupts if desired. When you are listening to a CD, the last selected RDS station will interrupt play if that selected program type format is broadcast.

SCAN: You can scan the stations within a PTY by performing the following:

1. Press the P-TYPE button to activate program type select mode. P-TYPE and the last selected PTY will appear on the display.
2. Turn the P-TYPE knob to select a PTY.
3. Once the desired PTY is displayed, press and hold either SCAN arrow, and the radio will begin scanning the stations in the PTY.
4. Press either SCAN arrow to stop at a station.

If both P-TYPE and TRAF are on, the radio will scan for stations with the selected PTY and traffic announcements.

AM FM (Alternate Frequency): Alternate frequency allows the radio to switch to a stronger station with the same program type. To turn alternate frequency on, press and hold AM FM for two seconds. AF ON will appear on the display. The radio may switch to stronger stations.

To turn alternate frequency off, press and hold AM FM again for two seconds. AF OFF will appear on the display. The radio will not switch to other stations.

Setting Preset PTYs

The six numbered pushbuttons let you return to your favorite PTYs. These buttons have factory PTY presets. You can set up to 12 PTYs (six FM1 and six FM2) by performing the following steps:

1. Press BAND to select FM1 or FM2.
2. Press the P-TYPE button to activate program type select mode. P-TYPE and the last selected PTY will appear on the display.
3. Turn the P-TYPE knob to select a PTY.
4. Press and hold one of the six numbered pushbuttons until you hear a beep. Whenever you press that numbered pushbutton, the PTY you set will return.
5. Repeat the steps for each pushbutton.

RDS Messages

ALERT!: Alert warns of local or national emergencies. When an alert announcement comes on the current radio station, ALERT! will appear on the display. You will hear the announcement, even if the volume is muted or a CD is playing. If a CD is playing, play will stop during the announcement. You will not be able to turn off alert announcements.

ALERT! will not be affected by tests of the emergency broadcast system. This feature is not supported by all RDS stations.

INFO (Information): If the current station has a message, INFO will appear on the display. Press this button to see the message. The message may display the artist, song title, call in phone numbers, etc.

If the whole message is not displayed, parts of the message will appear every three seconds. To scroll through the message at your own speed, press the INFO button repeatedly. A new group of words will appear on the display with each press. Once the complete message has been displayed, INFO will disappear from the display until another new message is received. The old message can be displayed by pressing the INFO button. You can view an old message until a new message is received or a different station is tuned to.

TRAF (Traffic): If TRAF appears on the display, the tuned station broadcasts traffic announcements. To receive the traffic announcement from the tuned station, press this button. Brackets will be displayed around TRAF and when a traffic announcement comes on the tuned radio station you will hear it.

If the current tuned station does not broadcast traffic announcements, press this button and the radio will seek to a station that does. When the radio finds a station that broadcasts traffic announcements, the radio will stop and brackets will be displayed around TRAF. When a traffic announcement comes on the tuned radio station you will hear it. If no station is found, NO TRAFFIC will appear on the display.

If the brackets are on the display and TRAF is not, you can then press the TRAF button to remove the brackets or use the TUNE knob or the SEEK arrows to go to a station that supports traffic announcements. If no station is found, NO TRAFFIC will appear on the display.

Your radio will play the traffic announcement even if the volume is low. Your radio will interrupt the play of a CD if the last tuned station broadcasts traffic announcements and the brackets are displayed.

Playing a CD

The CD player can play the smaller 8 cm single CDs with an adapter ring. Full-size CDs and the smaller CDs are loaded in the same manner.

If playing a CD-R the sound quality may be reduced due to CD-R quality, the method of recording, the quality of the music that has been recorded, and the way the CD-R has been handled. You may experience an increase in skipping, difficulty in finding tracks, and/or difficulty in loading and ejecting. If these problems occur try a known good CD.

Do not add paper labels to CDs, they could get caught in the CD player.

Do not play 3 inch CDs without a standard adapter CD.

If an error appears on the display, see “CD Messages” later in this section.

LOAD CD ⏏ : Press the LOAD side of this button to load CDs into the CD player. This CD player will hold up to six CDs.

To insert one CD, do the following:

1. Turn the ignition on.
2. Press and release the LOAD side of the LOAD CD button.
3. Wait for the light, located to the right of the slot, to turn green.
4. Load a CD. Insert the CD partway into the slot, label side up. The player will pull the CD in.

When a CD is inserted, the CD symbol will appear on the display. If you select an equalization setting for your CD, it will be activated each time you play a CD.

The CD will begin to play automatically. As each new track starts to play, the track number will appear on the display.

To insert multiple CDs, do the following:

1. Turn the ignition on.
2. Press and hold the LOAD side of the LOAD CD button for two seconds.

   You will hear a beep and the light, located to the right of the slot, will begin to flash.
3. Once the light stops flashing and turns green, load a CD. Insert the CD partway into the slot, label side up. The player will pull the CD in.

   Once the CD is loaded, the light will begin flashing again. Once the light stops flashing and turns green you can load another CD. The CD player takes up to six CDs. Do not try to load more than six.

To load more than one CD but less than six, complete Steps 1 through 3. When you have finished loading CDs, with the radio on or off, press the LOAD side of the LOAD CD button to cancel the loading function. The radio will begin to play the last CD loaded.

When a CD is inserted, the CD symbol will appear on the display. If more than one CD has been loaded, a number for each CD will appear on the display. If you select an equalization setting for your CD, it will be activated each time you play a CD.

As each new track starts to play, the track number will appear on the display.

Playing a Specific Loaded CD

For every CD loaded, a number will appear on the display. To play a specific CD, first press the CD AUX. Then press the numbered pushbutton that corresponds to the CD you want to play. A small bar will appear under the CD number that is playing, and the track number will appear.

If an error appears on the display, see “CD Messages” later in this section.

LOAD CD ⏏ (Eject): Press the CD eject side of this button to eject a single CD or multiple CDs. To eject the CD that is currently playing, press and release this button. To eject multiple CDs, press and hold this button for two seconds. You will hear a beep and the light will flash to let you know when a CD is being ejected.

REMOVE CD will appear on the display. You can now remove the CD. If the CD is not removed, after 25 seconds, the CD will be automatically pulled back into the receiver. If you try to push the CD back into the receiver, before the 25 second time period is complete, the receiver will sense an error and will try to eject the CD several times before stopping.

Do not repeatedly press the CD eject button to eject a CD after you have tried to push it in manually. The receivers 25-second eject timer will reset at each press of eject, which will cause the receiver to not eject the CD until the 25-second time period has elapsed.

Once the player stops and the CD is ejected, remove the CD. After removing the CD, push the PWR knob off and then on again. This will clear the CD-sensing feature and enable CDs to be loaded into the player again.

≪ **REV (Reverse):** Press and hold this button to reverse quickly within a track. You will hear sound at a reduced volume. Release the button to play the passage. The elapsed time of the track will appear on the display.

FWD ≫ (Forward): Press and hold this button to advance quickly within a track. You will hear sound at a reduced volume. Release the button to play the passage. The elapsed time of the track will appear on the display.

RPT (Repeat): With repeat, you can repeat one track or an entire CD. To use repeat, do the following:

- To repeat the track you are listening to, press and release the RPT button. RPT will appear on the display. Press RPT again to turn off repeat play.
- To repeat the CD you are listening to, press and hold the RPT button for two seconds. RPT will appear on the display. Press RPT again to turn off repeat play.

RDM (Random): With random, you can listen to the tracks in random, rather than sequential, order, on one CD or on all of the CDs. To use random, do one of the following:

- To play the tracks on the CD you are listening to in random order, press and release the RDM button. RANDOM ONE will appear on the display. Press RDM again to turn off random play.
- To play the tracks on all of the CDs that are loaded in random order, press and hold RDM for more than two seconds. You will hear a beep and RANDOM ALL will appear on the display. Press RDM again to turn off random play.

AUTO EQ (Automatic Equalization): Press AUTO EQ to select the desired equalization setting while playing a CD. The equalization will be automatically set whenever you play a CD. For more information on AUTO EQ, see “AUTO EQ” listed previously in this section.

⊢ SEEK ⊣ : Press the left arrow to go to the start of the current track, if more than ten seconds have passed. Press the right arrow to go to the next track. If you hold either arrow or press it more than once, the player will continue moving backward or forward through the CD.

⊢ SCAN ⊣ : To scan one CD, press and hold either SCAN arrow for more than two seconds until SCAN appears on the display and you hear a beep. Use this feature to listen to 10 seconds of each track of the currently selected CD. Press either SCAN arrow again, to stop scanning.

To scan all loaded CDs, press and hold either SCAN arrow for more than four seconds until CD SCAN appears on the display and you hear a beep. Use this feature to listen to 10 seconds of the first tracks of each CD loaded. Press either SCAN arrow again, to stop scanning.

RCL (Recall): Press this knob to see how long the current track has been playing. To change the default on the display (track and elapsed time), press the knob until you see the display you want, then hold the knob until the display flashes. The selected display will now be the default.

AM FM: Press this button to listen to the radio when a CD(s) is playing. The inactive CD(s) will remain in the radio for future listening.

CD AUX (Auxiliary): Press this button to play a CD when listening to the radio.

Using Song List Mode

The six-disc CD changer has a feature called song list. This feature is capable of saving 20 track selections.

To save tracks into the song list feature, perform the following steps:

1. Turn the CD player on and load it with at least one CD. See “LOAD CD” listed previously in this section for more information.
2. Check to see that the CD changer is not in song list mode. S-LIST should not appear in the display. If S-LIST is present, press the SONG LIST button to turn it off.
3. Select the desired CD by pressing the numbered pushbutton and then use the SEEK SCAN right arrow button to locate the track that you want to save. The track will begin to play.
4. Press and hold the SONG LIST button to save the track into memory. When SONG LIST is pressed a beep will be heard immediately. After two seconds of continuously pressing SONG LIST, two beeps will sound to confirm that the track has been saved.
5. Repeat Steps 3 and 4 for saving other selections.

S-LIST FULL will appear on the display if you try to save more than 20 selections.

To play the song list, press the SONG LIST button. One beep will be heard and S-LIST will appear on the display. The recorded tracks will begin to play in the order that they were saved.

You may seek through the song list by using the SEEK SCAN arrows. Seeking past the last saved track will return you to the first saved track.

To delete tracks from the song list, perform the following steps:

1. Turn the CD player on.
2. Press the SONG LIST button to turn song list on. S-LIST will appear on the display.
3. Press the SEEK SCAN arrows to select the desired track to be deleted.
4. Press and hold the SONG LIST button for two seconds. When SONG LIST is pressed, a beep will be heard immediately. After two seconds of continuously pressing the SONG LIST button, two beeps will be heard to confirm that the track has been deleted.

After a track has been deleted, the remaining tracks are moved up the list. When another track is added to the song list, the track will be added to the end of the list.

To delete the entire song list, perform the following steps:

1. Turn the CD player on.
2. Press the SONG LIST button to turn song list on. S-LIST will appear on the display.
3. Press and hold the SONG LIST button for more than four seconds. A beep will be heard, followed by two beeps after two seconds and a final beep will be heard after four seconds. S-LIST EMPTY will appear on the display indicating that the song list has been deleted.

If a CD is ejected, and the song list contains saved tracks from that CD, those tracks are automatically deleted from the song list. Any tracks saved to the song list again are added to the bottom of the list.

To end song list mode, press the SONG LIST button. One beep will be heard and S-LIST will be removed from the display.

CD Messages

CHECK CD: If this message appears on the radio display, it could be for one of the following reasons:

- It is very hot. When the temperature returns to normal, the CD should play.
- You are driving on a very rough road. When the road becomes smooth, the CD should play.
- The CD is dirty, scratched, wet, or upside down.
- The air is very humid. If so, wait about an hour and try again.
- There may have been a problem while burning the CD.
- The label may be caught in the CD player.

If the CD is not playing correctly, for any other reason, try a known good CD.

If any error occurs repeatedly or if an error cannot be corrected, contact your dealer. If your radio displays an error message, write it down and provide it to your dealer when reporting the problem.

Theft-Deterrent Feature

THEFTLOCK® is designed to discourage theft of your vehicle's radio. The feature works automatically by learning a portion of the Vehicle Identification Number (VIN). If the radio is moved to a different vehicle, it will not operate and LOCKED will appear on the display.

When the radio and vehicle are turned off, the blinking red light indicates that THEFTLOCK® is armed.

With THEFTLOCK® activated, the radio will not operate if stolen.

Audio Steering Wheel Controls

Some audio controls can be adjusted at the steering wheel. They include the following:

▲ **SEEK** ▼**:** Press the up or the down arrow to go to the next or to the previous radio station and stay there. The radio will only seek stations with a strong signal that are in the selected band.

When a CD is playing, press the up or the down arrow to fast forward or reverse.

▲ ▬ ▼ **(Volume):** Press the up or the down arrow to increase or to decrease the volume.

Radio Reception

AM

The range for most AM stations is greater than for FM, especially at night. The longer range, however, can cause stations to interfere with each other. AM can pick up noise from things like storms and power lines. Try reducing the treble to reduce this noise.

FM

FM stereo will give you the best sound, but FM signals will reach only about 10 to 40 miles (16 to 65 km). Tall buildings or hills can interfere with FM signals, causing the sound to come and go.

Care of Your CDs

Handle CDs carefully. Store them in their original cases or other protective cases and away from direct sunlight and dust. If the surface of a CD is soiled, dampen a clean, soft cloth in a mild, neutral detergent solution and clean it, wiping from the center to the edge.

Be sure never to touch the side without writing when handling CDs. Pick up CDs by grasping the outer edges or the edge of the hole and the outer edge.

Care of Your CD Player

The use of CD lens cleaners for CD players is not advised, due to the risk of contaminating the lens of the CD optics with lubricants internal to the CD mechanism.

Integrated Windshield Antenna

The antenna in your vehicle is a very thin, metal layer in the windshield. The outline of the antenna can be seen near the edges of the windshield. The connector is at the top of the windshield, where the headliner ends.

If difficulty with remote transmitters is experienced, such as a garage door opener, try pointing the device through the very top of the windshield.

NOTES

Section 4 Driving Your Vehicle

Your Driving, the Road, and Your Vehicle 4-2
Defensive Driving 4-2
Drunken Driving 4-3
Control of a Vehicle 4-6
Braking 4-6
Traction Control System (TCS) 4-9
Steering 4-11
Off-Road Recovery 4-13
Passing 4-13
Loss of Control 4-15
Driving at Night 4-16
Driving in Rain and on Wet Roads 4-17
City Driving 4-20
Freeway Driving 4-21
Before Leaving on a Long Trip 4-23
Highway Hypnosis 4-24
Hill and Mountain Roads 4-24
Winter Driving 4-26
If You Are Stuck: In Sand, Mud, Ice or Snow ...4-31

Towing 4-32
Towing Your Vehicle 4-32
Recreational Vehicle Towing 4-32
Loading Your Vehicle 4-32
Trailer Recommendations 4-38
Towing a Trailer 4-39

Your Driving, the Road, and Your Vehicle

Defensive Driving

The best advice anyone can give about driving is: Drive defensively.

Please start with a very important safety device in your vehicle: Buckle up. See *Safety Belts: They Are for Everyone on page 1-6*.

Defensive driving really means “be ready for anything.” On city streets, rural roads or freeways, it means “always expect the unexpected.”

Assume that pedestrians or other drivers are going to be careless and make mistakes. Anticipate what they might do. Be ready for their mistakes.

Rear-end collisions are about the most preventable of accidents. Yet they are common. Allow enough following distance. It is the best defensive driving maneuver, in both city and rural driving. You never know when the vehicle in front of you is going to brake or turn suddenly.

Defensive driving requires that a driver concentrate on the driving task. Anything that distracts from the driving task — such as concentrating on a cellular telephone call, reading, or reaching for something on the floor — makes proper defensive driving more difficult and can even cause a collision, with resulting injury. Ask a passenger to help do things like this, or pull off the road in a safe place to do them yourself. These simple defensive driving techniques could save your life.

Drunken Driving

Death and injury associated with drinking and driving is a national tragedy. It is the number one contributor to the highway death toll, claiming thousands of victims every year.

Alcohol affects four things that anyone needs to drive a vehicle:

- Judgment
- Muscular Coordination
- Vision
- Attentiveness.

Police records show that almost half of all motor vehicle-related deaths involve alcohol. In most cases, these deaths are the result of someone who was drinking and driving. In recent years, more than 16,000 annual motor vehicle-related deaths have been associated with the use of alcohol, with more than 300,000 people injured.

Many adults — by some estimates, nearly half the adult population — choose never to drink alcohol, so they never drive after drinking. For persons under 21, it is against the law in every U.S. state to drink alcohol. There are good medical, psychological and developmental reasons for these laws.

The obvious way to eliminate the leading highway safety problem is for people never to drink alcohol and then drive. But what if people do? How much is “too much” if someone plans to drive? It is a lot less than many might think. Although it depends on each person and situation, here is some general information on the problem.

The Blood Alcohol Concentration (BAC) of someone who is drinking depends upon four things:

- The amount of alcohol consumed
- The drinker’s body weight
- The amount of food that is consumed before and during drinking
- The length of time it has taken the drinker to consume the alcohol.

According to the American Medical Association, a 180 lb (82 kg) person who drinks three 12 ounce (355 ml) bottles of beer in an hour will end up with a BAC of about 0.06 percent. The person would reach the same BAC by drinking three 4 ounce (120 ml) glasses of wine or three mixed drinks if each had 1-1/2 ounces (45 ml) of liquors like whiskey, gin or vodka.

It is the amount of alcohol that counts. For example, if the same person drank three double martinis (3 ounces or 90 ml of liquor each) within an hour, the person's BAC would be close to 0.12 percent. A person who consumes food just before or during drinking will have a somewhat lower BAC level.

There is a gender difference, too. Women generally have a lower relative percentage of body water than men. Since alcohol is carried in body water, this means that a woman generally will reach a higher BAC level than a man of her same body weight will when each has the same number of drinks.

The law in an increasing number of U.S. states, and throughout Canada, sets the legal limit at 0.08 percent. In some other countries, the limit is even lower. For example, it is 0.05 percent in both France and Germany. The BAC limit for all commercial drivers in the United States is 0.04 percent.

The BAC will be over 0.10 percent after three to six drinks (in one hour). Of course, as we have seen, it depends on how much alcohol is in the drinks, and how quickly the person drinks them.

But the ability to drive is affected well below a BAC of 0.10 percent. Research shows that the driving skills of many people are impaired at a BAC approaching 0.05 percent, and that the effects are worse at night. All drivers are impaired at BAC levels above 0.05 percent. Statistics show that the chance of being in a collision increases sharply for drivers who have a BAC of 0.05 percent or above. A driver with a BAC level of 0.06 percent has doubled his or her chance of having a collision. At a BAC level of 0.10 percent, the chance of this driver having a collision is 12 times greater; at a level of 0.15 percent, the chance is 25 times greater!

The body takes about an hour to rid itself of the alcohol in one drink. No amount of coffee or number of cold showers will speed that up. “I will be careful” is not the right answer. What if there is an emergency, a need to take sudden action, as when a child darts into the street? A person with even a moderate BAC might not be able to react quickly enough to avoid the collision.

There is something else about drinking and driving that many people do not know. Medical research shows that alcohol in a person’s system can make crash injuries worse, especially injuries to the brain, spinal cord or heart. This means that when anyone who has been drinking — driver or passenger — is in a crash, that person’s chance of being killed or permanently disabled is higher than if the person had not been drinking.

⚠ CAUTION:

Drinking and then driving is very dangerous. Your reflexes, perceptions, attentiveness and judgment can be affected by even a small amount of alcohol. You can have a serious — or even fatal — collision if you drive after drinking. Please do not drink and drive or ride with a driver who has been drinking. Ride home in a cab; or if you are with a group, designate a driver who will not drink.

Control of a Vehicle

You have three systems that make your vehicle go where you want it to go. They are the brakes, the steering and the accelerator. All three systems have to do their work at the places where the tires meet the road.

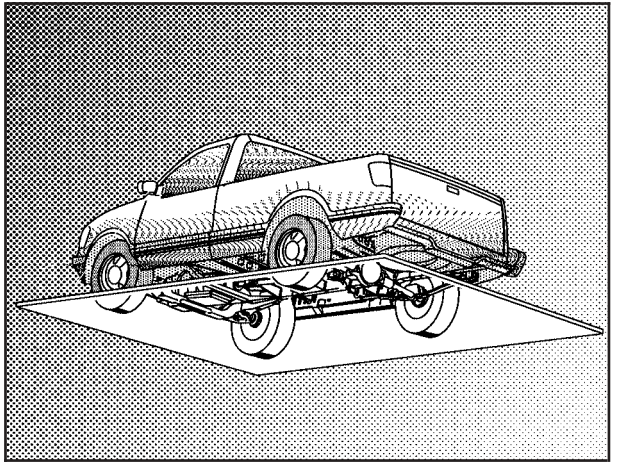

Sometimes, as when you are driving on snow or ice, it is easy to ask more of those control systems than the tires and road can provide. That means you can lose control of your vehicle.

Braking

Braking action involves *perception time* and *reaction time.*

First, you have to decide to push on the brake pedal. That is *perception time.* Then you have to bring up your foot and do it. That is *reaction time.*

Average *reaction time* is about 3/4 of a second. But that is only an average. It might be less with one driver and as long as two or three seconds or more with another. Age, physical condition, alertness, coordination and eyesight all play a part. So do alcohol, drugs and frustration. But even in 3/4 of a second, a vehicle moving at 60 mph (100 km/h) travels 66 feet (20 m). That could be a lot of distance in an emergency, so keeping enough space between your vehicle and others is important.

And, of course, actual stopping distances vary greatly with the surface of the road (whether it is pavement or gravel); the condition of the road (wet, dry, icy); tire tread; the condition of your brakes; the weight of the vehicle and the amount of brake force applied.

Avoid needless heavy braking. Some people drive in spurts — heavy acceleration followed by heavy braking — rather than keeping pace with traffic. This is a mistake. Your brakes may not have time to cool between hard stops. Your brakes will wear out much faster if you do a lot of heavy braking. If you keep pace with the traffic and allow realistic following distances, you will eliminate a lot of unnecessary braking. That means better braking and longer brake life.

If your engine ever stops while you are driving, brake normally but do not pump your brakes. If you do, the pedal may get harder to push down. If your engine stops, you will still have some power brake assist. But you will use it when you brake. Once the power assist is used up, it may take longer to stop and the brake pedal will be harder to push.

Anti-lock Brake System

Your vehicle has anti-lock brakes. ABS is an advanced electronic braking system that will help prevent a braking skid.

When you start your engine and begin to drive away, your anti-lock brake system will check itself. You may hear a momentary motor or clicking noise while this test is going on. This is normal.

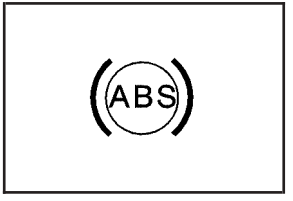

If there is a problem with the anti-lock brake system, this warning light will stay on. See *Anti-Lock Brake System Warning Light on page 3-31*.

Let us say the road is wet and you are driving safely. Suddenly, an animal jumps out in front of you. You slam on the brakes and continue braking. Here is what happens with ABS:

A computer senses that wheels are slowing down. If one of the wheels is about to stop rolling, the computer will separately work the brakes at each front wheel and at both rear wheels.

The anti-lock system can change the brake pressure faster than any driver could. The computer is programmed to make the most of available tire and road conditions. This can help you steer around the obstacle while braking hard.

As you brake, your computer keeps receiving updates on wheel speed and controls braking pressure accordingly.

Remember: Anti-lock does not change the time you need to get your foot up to the brake pedal or always decrease stopping distance. If you get too close to the vehicle in front of you, you will not have time to apply your brakes if that vehicle suddenly slows or stops. Always leave enough room up ahead to stop, even though you have anti-lock brakes.

Using Anti-Lock

Do not pump the brakes. Just hold the brake pedal down firmly and let anti-lock work for you. You may feel the brakes vibrate, or you may notice some noise, but this is normal.

Braking in Emergencies

With anti-lock, you can steer and brake at the same time. In many emergencies, steering can help you more than even the very best braking.

Traction Control System (TCS)

Your vehicle has a Traction Control System (TCS) that limits wheel spin. This is especially useful in slippery road conditions. The system operates only if it senses that one or both of the rear wheels are spinning or beginning to lose traction. When this happens, the system reduces engine power and may also upshift the transmission to limit wheel spin.

You may feel or hear the system working, but this is normal.

If your vehicle is in cruise control when the traction control system begins to limit wheel spin, the cruise control will automatically disengage. When road conditions allow you to safely use it again, you may re-engage the cruise control. See “Cruise Control” in *Turn Signal/Multifunction Lever on page 3-5*.

The Traction Control System operates in all transmission shift lever positions. But the system can upshift the transmission only as high as the shift lever position you’ve chosen, so you should use the lower gears only when necessary. See *Automatic Transmission Operation on page 2-16*.

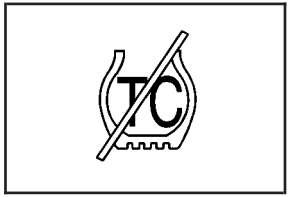

When the system is on, this warning light will come on to let you know if there's a problem.

When this warning light is on, the system will not limit wheel spin. Adjust your driving accordingly.

If the Traction Control System (TCS) is on and you drive faster than 100 mph (161 km/h), the system will turn off and the TC warning light will come on. The TCS will turn back on and the TC warning light will go out once the vehicle speed falls below 90 mph (145 km/h). See *Traction Control System (TCS) Warning Light on page 3-31*.

To limit wheel spin, especially in slippery road conditions, you should always leave the Traction Control System on. But you can turn the system off if you ever need to. You should turn the system off if your vehicle ever gets stuck in sand, mud or snow and rocking the vehicle is required. See "Rocking Your Vehicle" in *If You Are Stuck: In Sand, Mud, Ice or Snow on page 4-31*.

To turn the system on or off press the button located on your center console switchbank. See *Center Console Switchbank on page 3-17* for more information.

When you turn the system off, the Traction Control System warning light will come on and stay on. If the Traction Control System is limiting wheel spin when you press the button to turn the system off, the warning light will come on and the system will turn off right away.

You can turn the system back on at any time by pressing the button again. The Traction Control System warning light should go off.

Steering

Power Steering

If you lose power steering assist because the engine stops or the system is not functioning, you can steer but it will take much more effort.

Steering Tips

Driving on Curves

It is important to take curves at a reasonable speed.

A lot of the “driver lost control” accidents mentioned on the news happen on curves. Here is why:

Experienced driver or beginner, each of us is subject to the same laws of physics when driving on curves. The traction of the tires against the road surface makes it possible for the vehicle to change its path when you turn the front wheels. If there is no traction, inertia will keep the vehicle going in the same direction. If you have ever tried to steer a vehicle on wet ice, you will understand this.

The traction you can get in a curve depends on the condition of your tires and the road surface, the angle at which the curve is banked, and your speed. While you are in a curve, speed is the one factor you can control.

Suppose you are steering through a sharp curve. Then you suddenly accelerate. Both control systems — steering and acceleration — have to do their work where the tires meet the road. Adding the sudden acceleration can demand too much of those places. You can lose control.

What should you do if this ever happens? Ease up on the accelerator pedal, steer the vehicle the way you want it to go, and slow down.

Speed limit signs near curves warn that you should adjust your speed. Of course, the posted speeds are based on good weather and road conditions. Under less favorable conditions you will want to go slower.

If you need to reduce your speed as you approach a curve, do it before you enter the curve, while your front wheels are straight ahead.

Try to adjust your speed so you can “drive” through the curve. Maintain a reasonable, steady speed. Wait to accelerate until you are out of the curve, and then accelerate gently into the straightaway.

Steering in Emergencies

There are times when steering can be more effective than braking. For example, you come over a hill and find a truck stopped in your lane, or a car suddenly pulls out from nowhere, or a child darts out from between parked cars and stops right in front of you. You can avoid these problems by braking — if you can stop in time. But sometimes you can not; there is not room. That is the time for evasive action — steering around the problem.

Your vehicle can perform very well in emergencies like these. First apply your brakes.

See *Braking on page 4-6*. It is better to remove as much speed as you can from a possible collision. Then steer around the problem, to the left or right depending on the space available.

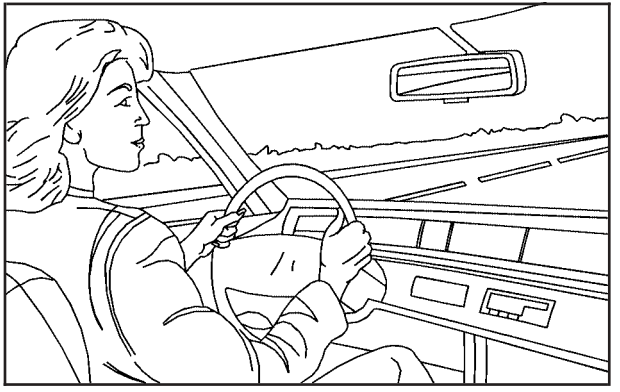

An emergency like this requires close attention and a quick decision. If you are holding the steering wheel at the recommended 9 and 3 o'clock positions, you can turn it a full 180 degrees very quickly without removing either hand. But you have to act fast, steer quickly, and just as quickly straighten the wheel once you have avoided the object.

The fact that such emergency situations are always possible is a good reason to practice defensive driving at all times and wear safety belts properly.

Off-Road Recovery

You may find that your right wheels have dropped off the edge of a road onto the shoulder while you are driving.

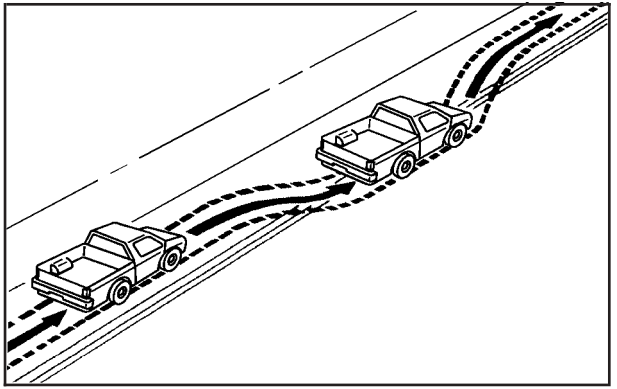

If the level of the shoulder is only slightly below the pavement, recovery should be fairly easy. Ease off the accelerator and then, if there is nothing in the way, steer so that your vehicle straddles the edge of the pavement. You can turn the steering wheel up to one-quarter turn until the right front tire contacts the pavement edge. Then turn your steering wheel to go straight down the roadway.

Passing

The driver of a vehicle about to pass another on a two-lane highway waits for just the right moment, accelerates, moves around the vehicle ahead, then goes back into the right lane again. A simple maneuver?

Not necessarily! Passing another vehicle on a two-lane highway is a potentially dangerous move, since the passing vehicle occupies the same lane as oncoming traffic for several seconds. A miscalculation, an error in judgment, or a brief surrender to frustration or anger can suddenly put the passing driver face to face with the worst of all traffic accidents — the head-on collision.

So here are some tips for passing:

- “Drive ahead.” Look down the road, to the sides and to crossroads for situations that might affect your passing patterns. If you have any doubt whatsoever about making a successful pass, wait for a better time.
- Watch for traffic signs, pavement markings and lines. If you can see a sign up ahead that might indicate a turn or an intersection, delay your pass. A broken center line usually indicates it is all right to pass (providing the road ahead is clear). Never cross a solid line on your side of the lane or a double solid line, even if the road seems empty of approaching traffic.

- Do not get too close to the vehicle you want to pass while you are awaiting an opportunity. For one thing, following too closely reduces your area of vision, especially if you are following a larger vehicle. Also, you will not have adequate space if the vehicle ahead suddenly slows or stops. Keep back a reasonable distance.
- When it looks like a chance to pass is coming up, start to accelerate but stay in the right lane and do not get too close. Time your move so you will be increasing speed as the time comes to move into the other lane. If the way is clear to pass, you will have a “running start” that more than makes up for the distance you would lose by dropping back. And if something happens to cause you to cancel your pass, you need only slow down and drop back again and wait for another opportunity.
- If other vehicles are lined up to pass a slow vehicle, wait your turn. But take care that someone is not trying to pass you as you pull out to pass the slow vehicle. Remember to glance over your shoulder and check the blind spot.
- Check your mirrors, glance over your shoulder, and start your left lane change signal before moving out of the right lane to pass. When you are far enough ahead of the passed vehicle to see its front in your inside mirror, activate your right lane change signal and move back into the right lane. (Remember that your right outside mirror is convex. The vehicle you just passed may seem to be farther away from you than it really is.)
- Try not to pass more than one vehicle at a time on two-lane roads. Reconsider before passing the next vehicle.
- Do not overtake a slowly moving vehicle too rapidly. Even though the brake lamps are not flashing, it may be slowing down or starting to turn.
- If you are being passed, make it easy for the following driver to get ahead of you. Perhaps you can ease a little to the right.

Loss of Control

Let us review what driving experts say about what happens when the three control systems (brakes, steering and acceleration) do not have enough friction where the tires meet the road to do what the driver has asked.

In any emergency, do not give up. Keep trying to steer and constantly seek an escape route or area of less danger.

Skidding

In a skid, a driver can lose control of the vehicle. Defensive drivers avoid most skids by taking reasonable care suited to existing conditions, and by not "overdriving" those conditions. But skids are always possible.

The three types of skids correspond to your vehicle's three control systems. In the braking skid, your wheels are not rolling. In the steering or cornering skid, too much speed or steering in a curve causes tires to slip and lose cornering force. And in the acceleration skid, too much throttle causes the driving wheels to spin.

A cornering skid is best handled by easing your foot off the accelerator pedal.

Remember: Any traction control system helps avoid only the acceleration skid. If your TCS system is off, then an acceleration skid is also best handled by easing your foot off the accelerator pedal.

If your vehicle starts to slide, ease your foot off the accelerator pedal and quickly steer the way you want the vehicle to go. If you start steering quickly enough, your vehicle may straighten out. Always be ready for a second skid if it occurs.

Of course, traction is reduced when water, snow, ice, gravel or other material is on the road. For safety, you will want to slow down and adjust your driving to these conditions. It is important to slow down on slippery surfaces because stopping distance will be longer and vehicle control more limited.

While driving on a surface with reduced traction, try your best to avoid sudden steering, acceleration or braking (including engine braking by shifting to a lower gear). Any sudden changes could cause the tires to slide. You may not realize the surface is slippery until your vehicle is skidding. Learn to recognize warning clues — such as enough water, ice or packed snow on the road to make a "mirrored surface" — and slow down when you have any doubt.

Remember: Any anti-lock brake system (ABS) helps avoid only the braking skid.

Driving at Night

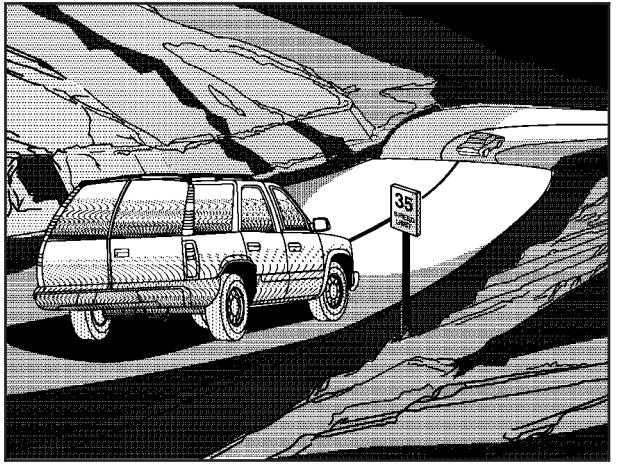

Night driving is more dangerous than day driving. One reason is that some drivers are likely to be impaired — by alcohol or drugs, with night vision problems, or by fatigue.

Here are some tips on night driving.

- Drive defensively.
- Do not drink and drive.
- Since you can not see as well, you may need to slow down and keep more space between you and other vehicles.
- Slow down, especially on higher speed roads. Your headlamps can light up only so much road ahead.
- In remote areas, watch for animals.
- If you are tired, pull off the road in a safe place and rest.

No one can see as well at night as in the daytime. But as we get older these differences increase. A 50-year-old driver may require at least twice as much light to see the same thing at night as a 20-year-old.

What you do in the daytime can also affect your night vision. For example, if you spend the day in bright sunshine you are wise to wear sunglasses. Your eyes will have less trouble adjusting to night. But if you are driving, do not wear sunglasses at night. They may cut down on glare from headlamps, but they also make a lot of things invisible.

You can be temporarily blinded by approaching headlamps. It can take a second or two, or even several seconds, for your eyes to readjust to the dark. When you are faced with severe glare (as from a driver who does not lower the high beams, or a vehicle with misaimed headlamps), slow down a little. Avoid staring directly into the approaching headlamps.

Keep your windshield and all the glass on your vehicle clean — inside and out. Glare at night is made much worse by dirt on the glass. Even the inside of the glass can build up a film caused by dust. Dirty glass makes lights dazzle and flash more than clean glass would, making the pupils of your eyes contract repeatedly.

Remember that your headlamps light up far less of a roadway when you are in a turn or curve. Keep your eyes moving; that way, it is easier to pick out dimly lighted objects. Just as your headlamps should be checked regularly for proper aim, so should your eyes be examined regularly. Some drivers suffer from night blindness — the inability to see in dim light — and are not even aware of it.

Driving in Rain and on Wet Roads

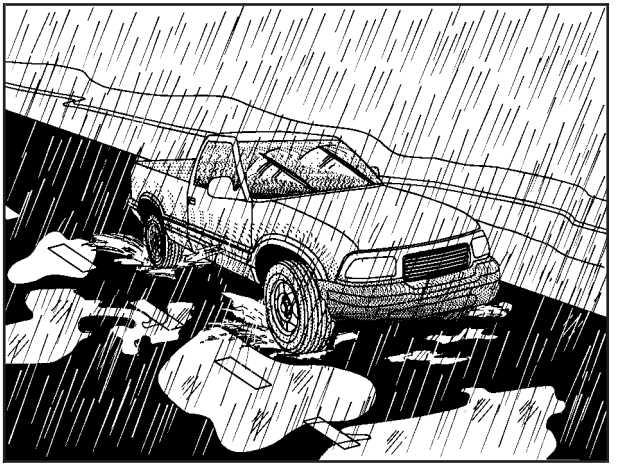

Rain and wet roads can mean driving trouble. On a wet road, you can not stop, accelerate or turn as well because your tire-to-road traction is not as good as on dry roads. And, if your tires do not have much tread left, you will get even less traction. It is always wise to go slower and be cautious if rain starts to fall while you are driving. The surface may get wet suddenly when your reflexes are tuned for driving on dry pavement.

The heavier the rain, the harder it is to see. Even if your windshield wiper blades are in good shape, a heavy rain can make it harder to see road signs and traffic signals, pavement markings, the edge of the road and even people walking.

It is wise to keep your wiping equipment in good shape and keep your windshield washer tank filled with washer fluid. Replace your windshield wiper inserts when they show signs of streaking or missing areas on the windshield, or when strips of rubber start to separate from the inserts.

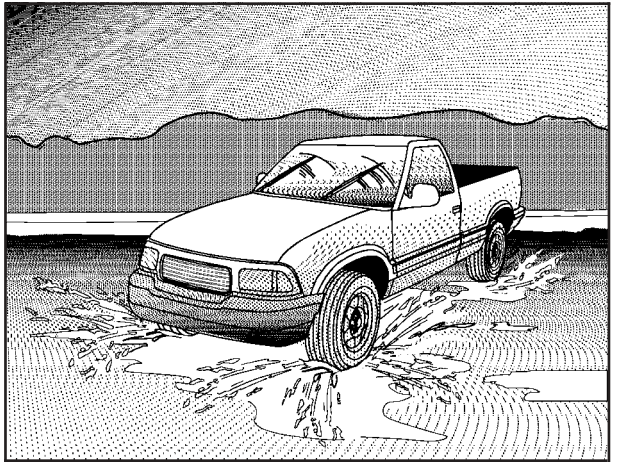

Driving too fast through large water puddles or even going through some car washes can cause problems, too. The water may affect your brakes. Try to avoid puddles. But if you can not, try to slow down before you hit them.

⚠ CAUTION:

Wet brakes can cause accidents. They will not work as well in a quick stop and may cause pulling to one side. You could lose control of the vehicle.

After driving through a large puddle of water or a car wash, apply your brake pedal lightly until your brakes work normally.

Hydroplaning

Hydroplaning is dangerous. So much water can build up under your tires that they can actually ride on the water. This can happen if the road is wet enough and you are going fast enough. When your vehicle is hydroplaning, it has little or no contact with the road.

Hydroplaning does not happen often. But it can if your tires do not have much tread or if the pressure in one or more is low. It can happen if a lot of water is standing on the road. If you can see reflections from trees, telephone poles or other vehicles, and raindrops “dimple” the water’s surface, there could be hydroplaning.

Hydroplaning usually happens at higher speeds. There just is not a hard and fast rule about hydroplaning. The best advice is to slow down when it is raining.

Driving Through Deep Standing Water

Notice: **If you drive too quickly through deep puddles or standing water, water can come in through your engine’s air intake and badly damage your engine. Never drive through water that is slightly lower than the underbody of your vehicle. If you can not avoid deep puddles or standing water, drive through them very slowly.**

Driving Through Flowing Water

⚠ CAUTION:

Flowing or rushing water creates strong forces. If you try to drive through flowing water, as you might at a low water crossing, your vehicle can be carried away. As little as six inches of flowing water can carry away a smaller vehicle. If this happens, you and other vehicle occupants could drown. Do not ignore police warning signs, and otherwise be very cautious about trying to drive through flowing water.

Some Other Rainy Weather Tips

- Besides slowing down, allow some extra following distance. And be especially careful when you pass another vehicle. Allow yourself more clear room ahead, and be prepared to have your view restricted by road spray.
- Have good tires with proper tread depth. See *Tires on page 5-51*.

City Driving

One of the biggest problems with city streets is the amount of traffic on them. You will want to watch out for what the other drivers are doing and pay attention to traffic signals.

Here are ways to increase your safety in city driving:

- Know the best way to get to where you are going. Get a city map and plan your trip into an unknown part of the city just as you would for a cross-country trip.
- Try to use the freeways that rim and crisscross most large cities. You will save time and energy. See *Freeway Driving on page 4-21*.
- Treat a green light as a warning signal. A traffic light is there because the corner is busy enough to need it. When a light turns green, and just before you start to move, check both ways for vehicles that have not cleared the intersection or may be running the red light.

Freeway Driving

Mile for mile, freeways (also called thruways, parkways, expressways, turnpikes or superhighways) are the safest of all roads. But they have their own special rules.

The most important advice on freeway driving is: Keep up with traffic and keep to the right. Drive at the same speed most of the other drivers are driving. Too-fast or too-slow driving breaks a smooth traffic flow. Treat the left lane on a freeway as a passing lane.

At the entrance, there is usually a ramp that leads to the freeway. If you have a clear view of the freeway as you drive along the entrance ramp, you should begin to check traffic. Try to determine where you expect to blend with the flow. Try to merge into the gap at close to the prevailing speed. Switch on your turn signal, check your mirrors and glance over your shoulder as often as necessary. Try to blend smoothly with the traffic flow.

Once you are on the freeway, adjust your speed to the posted limit or to the prevailing rate if it is slower. Stay in the right lane unless you want to pass.

Before changing lanes, check your mirrors. Then use your turn signal.

Just before you leave the lane, glance quickly over your shoulder to make sure there is not another vehicle in your “blind” spot.

Once you are moving on the freeway, make certain you allow a reasonable following distance. Expect to move slightly slower at night.

When you want to leave the freeway, move to the proper lane well in advance. If you miss your exit, do not, under any circumstances, stop and back up. Drive on to the next exit.

The exit ramp can be curved, sometimes quite sharply. The exit speed is usually posted.

Reduce your speed according to your speedometer, not to your sense of motion. After driving for any distance at higher speeds, you may tend to think you are going slower than you actually are.

Before Leaving on a Long Trip

Make sure you are ready. Try to be well rested. If you must start when you are not fresh — such as after a day's work — do not plan to make too many miles that first part of the journey. Wear comfortable clothing and shoes you can easily drive in.

Is your vehicle ready for a long trip? If you keep it serviced and maintained, it is ready to go. If it needs service, have it done before starting out. Of course, you will find experienced and able service experts in GM dealerships all across North America. They will be ready and willing to help if you need it.

Here are some things you can check before a trip:

- *Windshield Washer Fluid:* Is the reservoir full? Are all windows clean inside and outside?
- *Wiper Blades:* Are they in good shape?
- *Fuel, Engine Oil, Other Fluids:* Have you checked all levels?
- *Lamps:* Are they all working? Are the lenses clean?
- *Tires:* They are vitally important to a safe, trouble-free trip. Is the tread good enough for long-distance driving? Are the tires all inflated to the recommended pressure?
- *Weather Forecasts:* What is the weather outlook along your route? Should you delay your trip a short time to avoid a major storm system?
- *Maps:* Do you have up-to-date maps?

Highway Hypnosis

Is there actually such a condition as “highway hypnosis”? Or is it just plain falling asleep at the wheel? Call it highway hypnosis, lack of awareness, or whatever.

There is something about an easy stretch of road with the same scenery, along with the hum of the tires on the road, the drone of the engine, and the rush of the wind against the vehicle that can make you sleepy. Do not let it happen to you! If it does, your vehicle can leave the road in *less than a second,* and you could crash and be injured.

What can you do about highway hypnosis? First, be aware that it can happen.

Then here are some tips:

- Make sure your vehicle is well ventilated, with a comfortably cool interior.
- Keep your eyes moving. Scan the road ahead and to the sides. Check your mirrors and your instruments frequently.
- If you get sleepy, pull off the road into a rest, service or parking area and take a nap, get some exercise, or both. For safety, treat drowsiness on the highway as an emergency.

Hill and Mountain Roads

Driving on steep hills or mountains is different from driving in flat or rolling terrain.

If you drive regularly in steep country, or if you are planning to visit there, here are some tips that can make your trips safer and more enjoyable.

- Keep your vehicle in good shape. Check all fluid levels and also the brakes, tires, cooling system and transmission. These parts can work hard on mountain roads.
- Know how to go down hills. The most important thing to know is this: let your engine do some of the slowing down. Shift to a lower gear when you go down a steep or long hill.

⚠ CAUTION:

If you do not shift down, your brakes could get so hot that they would not work well. You would then have poor braking or even none going down a hill. You could crash. Shift down to let your engine assist your brakes on a steep downhill slope.

⚠ CAUTION:

Coasting downhill in NEUTRAL (N) or with the ignition off is dangerous. Your brakes will have to do all the work of slowing down. They could get so hot that they would not work well. You would then have poor braking or even none going down a hill. You could crash. Always have your engine running and your vehicle in gear when you go downhill.

- Know how to go uphill. You may want to shift down to a lower gear. The lower gears help cool your engine and transmission, and you can climb the hill better.
- Stay in your own lane when driving on two-lane roads in hills or mountains. Do not swing wide or cut across the center of the road. Drive at speeds that let you stay in your own lane.

- As you go over the top of a hill, be alert. There could be something in your lane, like a stalled car or an accident.
- You may see highway signs on mountains that warn of special problems. Examples are long grades, passing or no-passing zones, a falling rocks area or winding roads. Be alert to these and take appropriate action.

Winter Driving

Here are some tips for winter driving:

- Have your vehicle in good shape for winter.
- You may want to put winter emergency supplies in your vehicle.

Also see *Tires on page 5-51*.

Include an ice scraper, a small brush or broom, a supply of windshield washer fluid, a rag, some winter outer clothing, a small shovel, a flashlight, a red cloth and a couple of reflective warning triangles. And, if you will be driving under severe conditions, include a small bag of sand, a piece of old carpet or a couple of burlap bags to help provide traction. Be sure you properly secure these items in your vehicle.

Driving on Snow or Ice

Most of the time, those places where your tires meet the road probably have good traction.

However, if there is snow or ice between your tires and the road, you can have a very slippery situation. You will have a lot less traction or “grip” and will need to be very careful.

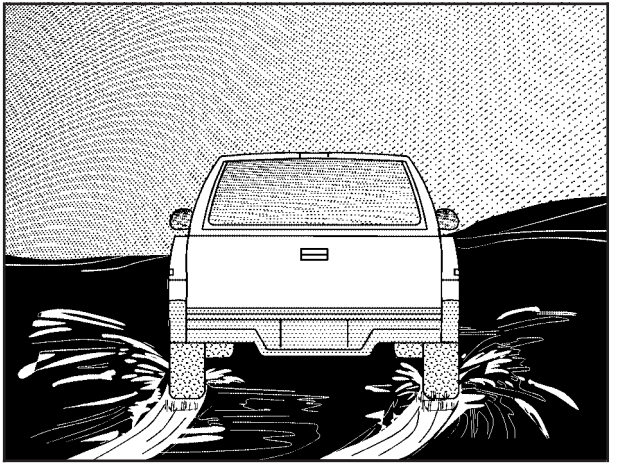

What is the worst time for this? “Wet ice.” Very cold snow or ice can be slick and hard to drive on. But wet ice can be even more trouble because it may offer the least traction of all. You can get wet ice when it is about freezing (32°F; 0°C) and freezing rain begins to fall. Try to avoid driving on wet ice until salt and sand crews can get there.

Whatever the condition — smooth ice, packed, blowing or loose snow — drive with caution.

Accelerate gently. Try not to break the fragile traction. If you accelerate too fast, the drive wheels will spin and polish the surface under the tires even more.

Your anti-lock brakes improve your vehicle’s stability when you make a hard stop on a slippery road. Even though you have an anti-lock braking system, you will want to begin stopping sooner than you would on dry pavement. See *Braking on page 4-6*.

- Allow greater following distance on any slippery road.
- Watch for slippery spots. The road might be fine until you hit a spot that is covered with ice. On an otherwise clear road, ice patches may appear in shaded areas where the sun can not reach: around clumps of trees, behind buildings or under bridges. Sometimes the surface of a curve or an overpass may remain icy when the surrounding roads are clear. If you see a patch of ice ahead of you, brake before you are on it. Try not to brake while you are actually on the ice, and avoid sudden steering maneuvers.

If You Are Caught in a Blizzard

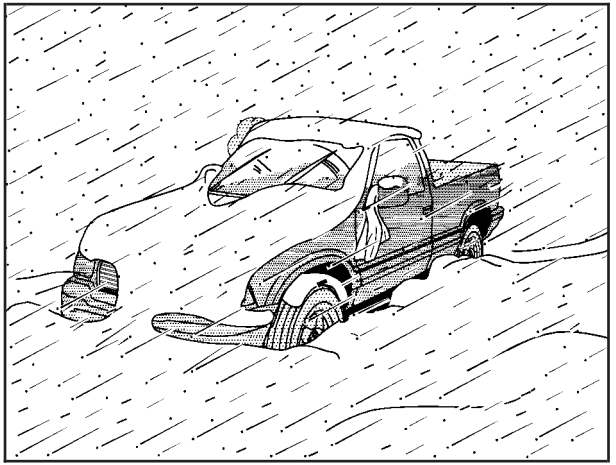

If you are stopped by heavy snow, you could be in a serious situation. You should probably stay with your vehicle unless you know for sure that you are near help and you can hike through the snow. Here are some things to do to summon help and keep yourself and your passengers safe:

- Turn on your hazard flashers.
- Tie a red cloth to your vehicle to alert police that you have been stopped by the snow.
- Put on extra clothing or wrap a blanket around you. If you have no blankets or extra clothing, make body insulators from newspapers, burlap bags, rags, floor mats — anything you can wrap around yourself or tuck under your clothing to keep warm.

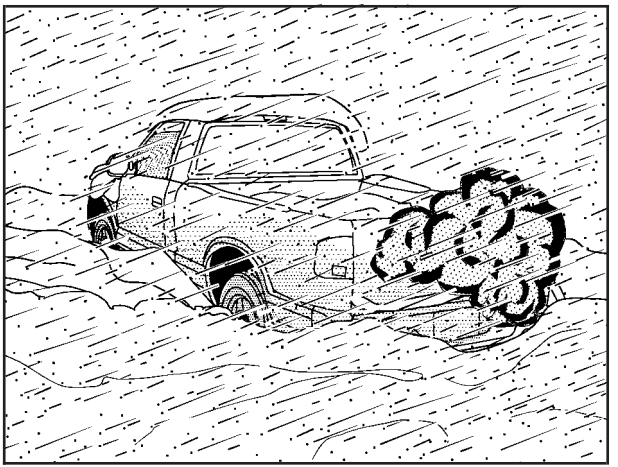

You can run the engine to keep warm, but be careful.

⚠ CAUTION:

Snow can trap exhaust gases under your vehicle. This can cause deadly CO (carbon monoxide) gas to get inside. CO could overcome you and kill you. You can not see it or smell it, so you might not know it is in your vehicle. Clear away snow from around the base of your vehicle, especially any that is blocking your exhaust pipe. And check around again from time to time to be sure snow does not collect there.

Open a window just a little on the side of the vehicle that is away from the wind. This will help keep CO out.

Run your engine only as long as you must. This saves fuel. When you run the engine, make it go a little faster than just idle. That is, push the accelerator slightly. This uses less fuel for the heat that you get and it keeps the battery charged. You will need a well-charged battery to restart the vehicle, and possibly for signaling later on with your headlamps. Let the heater run for a while.

Then, shut the engine off and close the window almost all the way to preserve the heat. Start the engine again and repeat this only when you feel really uncomfortable from the cold. But do it as little as possible. Preserve the fuel as long as you can. To help keep warm, you can get out of the vehicle and do some fairly vigorous exercises every half hour or so until help comes.

If You Are Stuck: In Sand, Mud, Ice or Snow

In order to free your vehicle when it is stuck, you will need to spin the wheels, but you do not want to spin your wheels too fast. The method known as “rocking” can help you get out when you are stuck, but you must use caution.

⚠ CAUTION:

If you let your tires spin at high speed, they can explode, and you or others could be injured. And, the transmission or other parts of the vehicle can overheat. That could cause an engine compartment fire or other damage. When you are stuck, spin the wheels as little as possible. Do not spin the wheels above 35 mph (55 km/h) as shown on the speedometer.

Notice: **Spinning your wheels can destroy parts of your vehicle as well as the tires. If you spin the wheels too fast while shifting your transmission back and forth, you can destroy your transmission.**

For information about using tire chains on your vehicle, see *Tire Chains on page 5-65*.

Rocking Your Vehicle To Get It Out

First, turn your steering wheel left and right. That will clear the area around your front wheels. Turn your traction control system off; see *Traction Control System (TCS) on page 4-9*. Then shift back and forth between REVERSE (R) and a forward gear, spinning the wheels as little as possible. Release the accelerator pedal while you shift, and press lightly on the accelerator pedal when the transmission is in gear. By slowly spinning your wheels in the forward and reverse directions, you will cause a rocking motion that may free your vehicle. If that does not get you out after a few tries, you may need to be towed out. If you do need to be towed out, see *Towing Your Vehicle on page 4-32*.

Towing

Towing Your Vehicle

Consult your dealer or a professional towing service if you need to have your disabled vehicle towed. See *Roadside Assistance Program on page 7-6*.

For information about recreational vehicle towing, see the following entry.

Recreational Vehicle Towing

Recreational vehicle towing means towing your vehicle behind another vehicle — such as behind a motorhome. The two most common types of recreational vehicle towing are known as “dinghy towing” (towing your vehicle with all four wheels on the ground) and “dolly towing” (towing your vehicle with two wheels on the ground and two wheels up on a device known as a “dolly”).

Notice: **If you tow your vehicle with all four wheels on the ground, the drivetrain components could be damaged. The repairs would not be covered by your warranty. Do not tow your vehicle with all four wheels on the ground.**

Your vehicle was not designed to be towed with any of its wheels on the ground. If your vehicle must be towed, it should be placed on a platform trailer.

Loading Your Vehicle

It is very important to know how much weight your vehicle can carry. This weight is called the vehicle capacity weight and includes the weight of all occupants, cargo and all nonfactory-installed options. Two labels on your vehicle show how much weight it may properly carry, the Tire and Loading Information label and the Certification/Tire label.

⚠ CAUTION:

Do not load your vehicle any heavier than the GVWR, or either the maximum front or rear GAWR. If you do, parts on your vehicle can break, and it can change the way your vehicle handles. These could cause you to lose control and crash. Also, overloading can shorten the life of your vehicle.

Tire and Loading Information Label

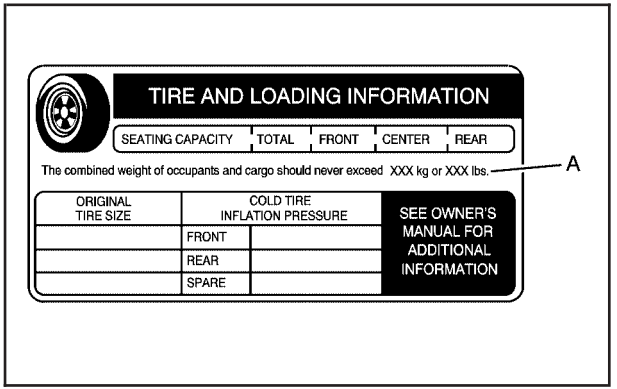

U.S. shown, Canada similar

A. Vehicle Capacity Weight

The Tire and Loading Information label is attached to the center pillar, near the driver's door latch. Vehicles without a center pillar will have the Tire and Loading Information label attached to the driver's door edge. This label lists the number of people that can be in your vehicle and the total weight it can carry. This weight is called the vehicle capacity weight.

The Tire and Loading Information label also tells you the size and recommended inflation pressure for the original equipment tires on your vehicle. For more information on tires and inflation see *Tires on page 5-51* and *Inflation - Tire Pressure on page 5-58*.

If your vehicle does not have the Tire and Loading Information label, the Certification/Tire label shows the tire size and recommended inflation pressures needed to obtain the Gross Vehicle Weight Rating (GVWR) and the Gross Axle Weight Rating (GAWR) for the front and rear axles. See "Certification/Tire Label" later in this section.

Steps for Determining Correct Load Limit

1. Locate the statement “The combined weight of occupants and cargo should never exceed XXX pounds” on your vehicle placard.
2. Determine the combined weight of the driver and passengers that will be riding in your vehicle.
3. Subtract the combined weight of the driver and passengers from XXX kilograms or XXX pounds.
4. The resulting figure equals the available amount of cargo and luggage load capacity. For example, if the “XXX” amount equals 1400 lbs. and there will be five 150 lb. passengers in your vehicle, the amount of available cargo and luggage load capacity is 650 lbs. (1400 – 750 (5 x 150) = 650 lbs.).
5. Determine the combined weight of luggage and cargo being loaded on the vehicle. That weight may not safely exceed the available cargo and luggage load capacity calculated in Step 4.
6. If your vehicle will be towing a trailer, the load from your trailer will be transferred to your vehicle. Consult this manual to determine how this reduces the available cargo and luggage load capacity of your vehicle.

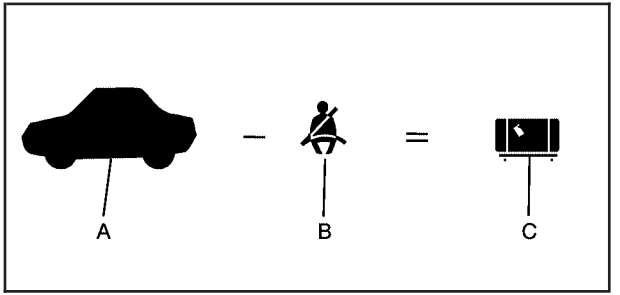

Example 1

Loading Your Vehicle

Item	Description	Total
A	Vehicle Capacity Weight for Example 1=	400 lbs (181 kg)
B	Subtract Occupant Weight 150 lbs (68 kg) x 1=	150 lbs (68 kg)
C	Available Occupant and Cargo Weight =	250 lbs (113 kg)

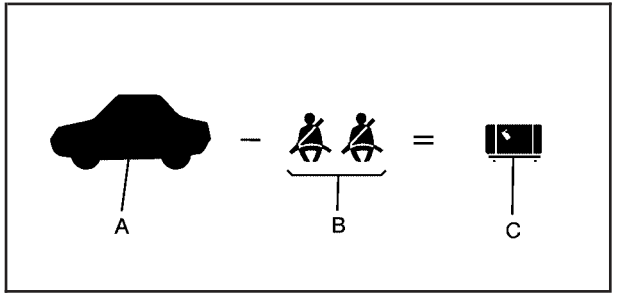

Example 2

Loading Your Vehicle

Item	Description	Total
A	Vehicle Capacity Weight for Example 2 =	400 lbs (181 kg)
B	Subtract Occupant Weight 150 lbs (68 kg) x 2 =	300 lbs (136 kg)
C	Available Cargo Weight =	100 lbs (45 kg)

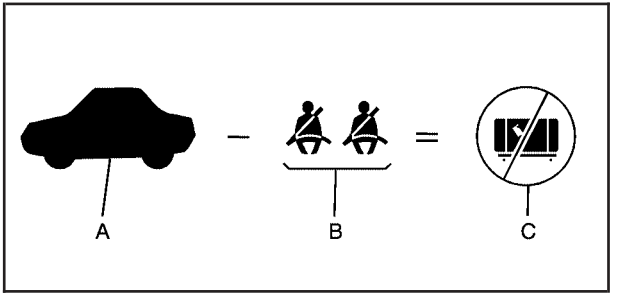

Example 3

Loading Your Vehicle

Item	Description	Total
A	Vehicle Capacity Weight for Example 3 =	400 lbs (181 kg)
B	Subtract Occupant Weight 200 lbs (91 kg) x 2 =	400 lbs (181 kg)
C	Available Cargo Weight =	0 lbs (0 kg)

Refer to your vehicle's tire and loading label for specific information about your vehicle's capacity weight and seating positions. The combined weight of the driver, passengers, and cargo should never exceed your vehicle's capacity weight.

Certification/Tire Label

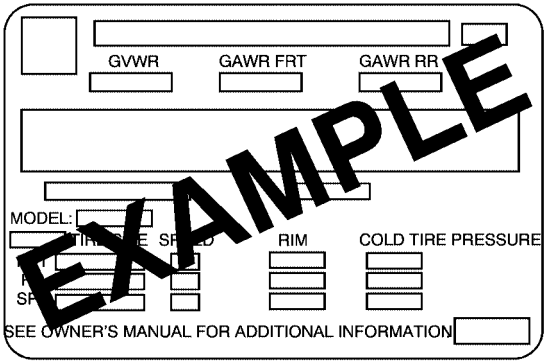

U.S. Shown, Canada Similar

The Certification/Tire label is found on the driver's door edge, below the door latch. The label shows the size of your original tires and the inflation pressures needed to obtain the gross weight capacity of your vehicle. This is called the Gross Vehicle Weight Rating (GVWR). The GVWR includes the weight of the vehicle, all occupants, fuel, cargo and trailer tongue weight, if pulling a trailer.

The Certification/Tire label also tells you the maximum weights for the front and rear axles, called Gross Axle Weight Rating (GAWR). To find out the actual loads on your rear axle, you need to go to a weigh station and weigh your vehicle. Your dealer can help you with this. Be sure to spread out your load equally on both sides of the centerline.

Never exceed the GVWR for your vehicle, or the GAWR for the rear axle.

And, if you do have a heavy load, you should spread it out and load toward the front of the pickup box.

Similar appearing vehicles may have different GVWRs and payloads. Please note the Certification/Tire label on your truck or consult your dealer for additional details.

⚠ CAUTION:

In the case of a sudden stop or collision, things carried in the bed of your truck could shift forward and come into the passenger area, injuring you and others. If you put things in the bed of your truck, you should make sure they are properly secured.

⚠ CAUTION:

Do not load your vehicle any heavier than the GVWR, or either the maximum front or rear GAWR. If you do, parts on your vehicle can break, and it can change the way your vehicle handles. These could cause you to lose control and crash. Also, overloading can shorten the life of your vehicle.

Using heavier suspension components to get added durability might not change your weight ratings. Ask your dealer to help you load your vehicle the right way.

Notice: **Overloading your vehicle may cause damage. Repairs would not be covered by your warranty. Do not overload your vehicle.**

If you put things inside your vehicle — like suitcases, tools, packages, or anything else — they will go as fast as the vehicle goes. If you have to stop or turn quickly, or if there is a crash, they'll keep going.

⚠ CAUTION:

Things you put inside your vehicle can strike and injure people in a sudden stop or turn, or in a crash.

- **Put things in the rear area of your vehicle. Try to spread the weight evenly.**
- **Never stack heavier things, like suitcases, above the tops of the seats inside the vehicle or in the cargo area when the convertible top is lowered.**
- **If you carry tall objects in the cargo area, secure them properly and have the convertible top fastened in the raised position.**
- **Do not leave an unsecured child restraint in your vehicle.**
- **When you carry something inside the vehicle, secure it whenever you can.**

Payload

This is the maximum load capacity that your vehicle can carry. Be sure to include the weight of the occupants as part of your load. If you added any accessories or equipment after your vehicle left the factory, remember to subtract the weight of these things from the payload. Your dealer can help you with this.

Remember not to exceed the Gross Axle Weight Rating (GAWR) of the front or rear axle. See *Loading Your Vehicle on page 4-32*.

Add-On Equipment

When you carry removable items, you may need to put a limit on how many people you carry inside your vehicle. Be sure to weigh your vehicle before you buy and install the new equipment.

Notice: **Overloading your vehicle may cause damage. Repairs would not be covered by your warranty. Do not overload your vehicle.**

Remember not to exceed the Gross Axle Weight Rating (GAWR) of the rear axle. See *Loading Your Vehicle on page 4-32*.

Trailer Recommendations

You must subtract your hitch load from the Cargo Weight Rating (CWR) for your vehicle. The CWR is the maximum weight of the load your vehicle can carry. The CWR does not include the weight of the people inside, but you can figure about 150 lbs. (68 kg) for each seating position. The total cargo load must not be more than the vehicle's CWR. Make sure to weigh your vehicle with your trailer attached, so that you won't go over the GVWR or the GAWR.

You'll get the best performance if you spread out the weight of your load the right way, and if you choose the correct hitch and trailer brakes.

For more information, see *Towing a Trailer on page 4-39* later in this section.

Towing a Trailer

⚠ CAUTION:

If you do not use the correct equipment and drive properly, you can lose control when you pull a trailer. For example, if the trailer is too heavy, the brakes may not work well — or even at all. You and your passengers could be seriously injured. Pull a trailer only if you have followed all the steps in this section. Ask your dealer for advice and information about towing a trailer with your vehicle.

Notice: **Pulling a trailer improperly can damage your vehicle and result in costly repairs that would not be covered by your warranty. Always follow the instructions in this section and check with your dealer for more information about towing a trailer with your vehicle.**

To identify what the vehicle trailering capacity is for your vehicle, you should read the information in “Weight of the Trailer” that appears later in this section.

If yours was built with trailering options, as many are, it’s ready for heavier trailers. But trailering is different than just driving your vehicle by itself. Trailering means changes in handling, acceleration, braking, durability and fuel economy. Successful, safe trailering takes correct equipment, and it has to be used properly.

That’s the reason for this part. In it are many time-tested, important trailering tips and safety rules. Many of these are important for your safety and that of your passengers. So please read this section carefully before you pull a trailer.

If You Decide To Pull A Trailer

If you do, here are some important points:

- There are many different laws, including speed limit restrictions, having to do with trailering. Make sure your rig will be legal, not only where you live but also where you'll be driving. A good source for this information can be state or provincial police.
- Don't tow a trailer at all during the first 500 miles (800 km) your new vehicle is driven. Your engine, axle or other parts could be damaged.
- Then, during the first 500 miles (800 km) that you tow a trailer, don't drive over 50 mph (80 km/h) and don't make starts at full throttle. This helps your engine and other parts of your vehicle wear in at the heavier loads.
- Tow the trailer in DRIVE (D). You may want to shift the transmission to THIRD (3) or, if necessary, a lower gear if the transmission shifts too often under heavy loads and/or hilly conditions.

Three important considerations have to do with weight:

- Weight of the trailer
- Weight of the trailer tongue
- Weight on your vehicle's tires

Weight of the Trailer

How heavy can a trailer safely be?

It depends on how you plan to use your rig. For example, speed, altitude, road grades, outside temperature and how much your vehicle is used to pull a trailer are all important. And, it can also depend on any special equipment that you have on your vehicle.

Maximum trailer weight is calculated assuming the driver and one passenger are in the tow vehicle and it has all the required trailering equipment. The weight of additional optional equipment, passengers and cargo in the tow vehicle must be subtracted from the maximum trailer weight. The weight of the trailer tongue also affects the maximum trailer weight. See “Weight of the Trailer Tongue” later in this section.

Your vehicle is a two-wheel drive vehicle. The axle ratio is 3.73, the maximum trailer weight is 2,500 lbs. (1 134 kg) and the Gross Combination Weight Rating (GCWR) is 8,000 lbs. (3 629 kg).

The Gross Combination Weight Rating (GCWR) is the total allowable weight of the completely loaded vehicle and trailer including any passengers, cargo, equipment and conversions. The GCWR for your vehicle should not be exceeded.

You can ask your dealer for trailering information or advice, or you can write us at the address listed in your Warranty and Owner Assistance Information Booklet.

In Canada, write to:

General Motors of Canada Limited
Customer Communication Centre, 163-005
1908 Colonel Sam Drive
Oshawa, Ontario L1H 8P7

Weight of the Trailer Tongue

The tongue load (A) of any trailer is an important weight to measure because it affects the total gross weight of your vehicle. The Gross Vehicle Weight (GVW) includes the curb weight of the vehicle, any cargo you may carry in it, and the people who will be riding in the vehicle. If you have a lot of options, equipment, passengers or cargo in your vehicle, it will reduce the tongue weight your vehicle can carry, which will also reduce the trailer weight your vehicle can tow. And if you will tow a trailer, you must add the tongue load to the GVW because your vehicle will be carrying that weight, too. See *Loading Your Vehicle on page 4-32* for more information about your vehicle's maximum load capacity.

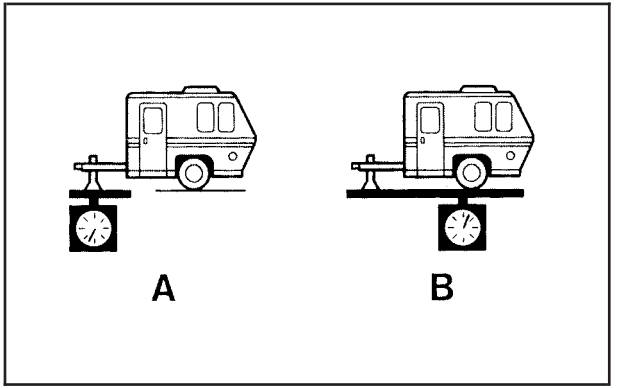

The trailer tongue weight (A) should be 10 percent to 15 percent of the total loaded trailer weight, up to a maximum of 250 lbs (113 kg) with the equipped hitch.

Do not exceed the maximum allowable tongue weight for your vehicle. Only use the equipped hitch that comes with your vehicle.

After you've loaded your trailer, weigh the trailer and then the tongue, separately to see if the weights are proper. If they aren't, you may be able to get them right simply by moving some items around in the trailer.

Total Weight on Your Vehicle's Tires

Be sure your vehicle's tires are inflated to the upper limit for cold tires. You'll find these numbers on the Certification label at the rear edge of the driver's door. See *Loading Your Vehicle on page 4-32*. Then be sure you don't go over the GVW limit for your vehicle, including the weight of the trailer tongue.

Hitches

Your vehicle is compatible only with the following trailering hitch. To order this hitch, see your dealer.

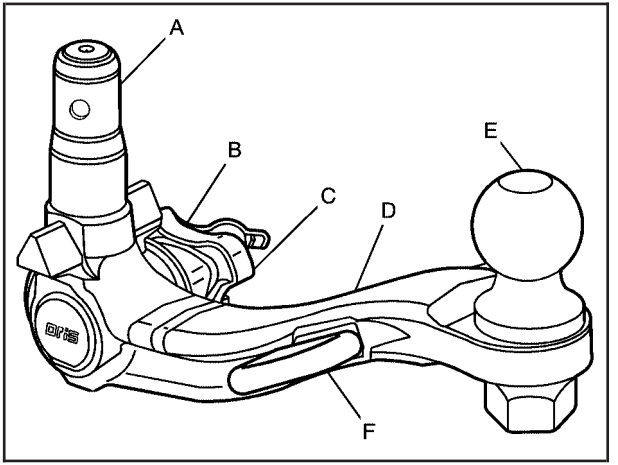

A. Centering Device
B. Handwheel
C. Lock
D. Ball Rod
E. Ball (purchased separately)
F. Chain Loop

Installing the Ball Rod

To install the ball rod do the following:

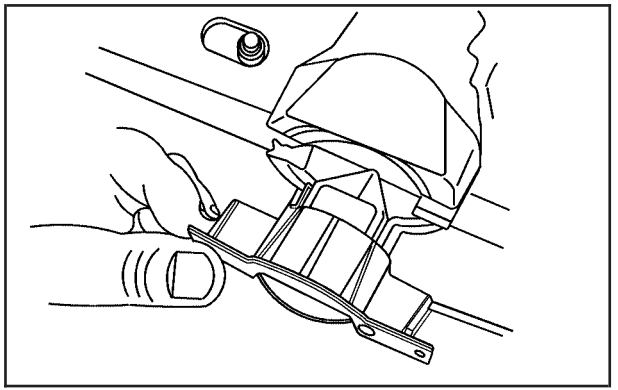

1. Remove the cover of the housing located behind the license plate area by pushing in the tabs and pulling downward.

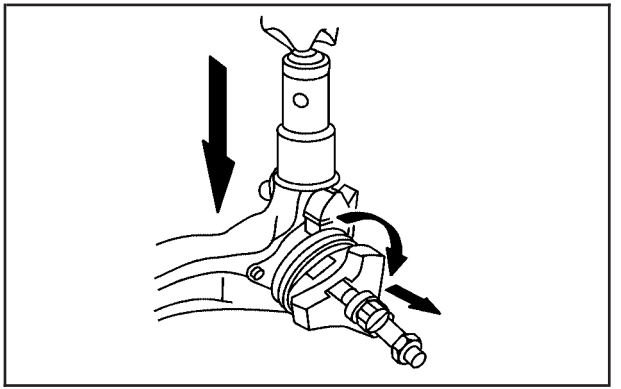

2. Be sure the unit is unlocked before pretensioning. Unlock using the key.

Then pretension the ball rod by pulling out the handwheel and turning it counterclockwise. When the ball is pretensioned, it means:

- The red area of the handwheel should be opposite the white marking on the ball rod.
- The key cannot be withdrawn.
- The ball rod can only be installed in this position. If the key is inserted and the lock is open, tighten the handwheel slightly and turn clockwise as far as the stop. Insert the ball rod as far into the housing as it will go. When this happens, you will hear the lock engage.

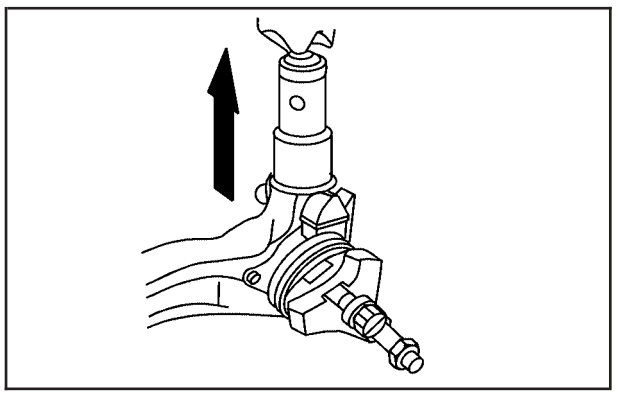

3. Check that the ball rod is tight by doing the following:
   - Close the lock, withdraw the key, and install the lock cover securely.
   - The green area on the handwheel should be opposite the white dot on the ball rod.
   - Move the hitch back and forth to ensure it is properly secured.

If you cannot complete all of the above checks, repeat the assembly procedure.

Removing the Ball Rod

To remove the ball rod do the following:

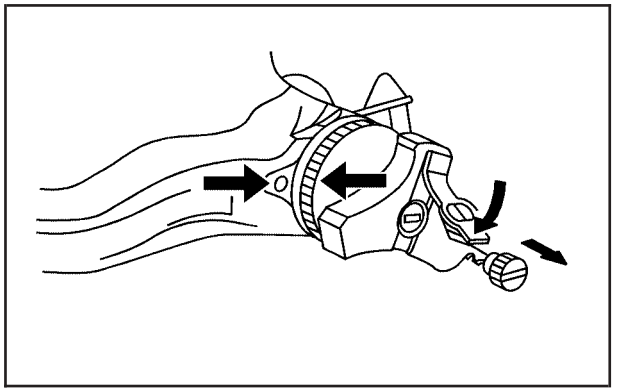

1. Open the lock cover on the handwheel and unlock with the key.

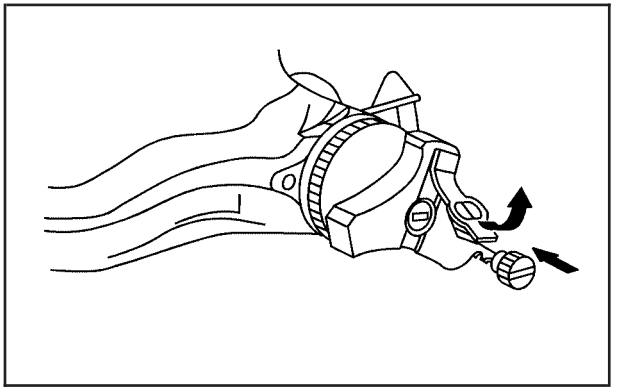

2. Hold the ball rod tight with one hand, tighten the handwheel slightly and turn it clockwise as far as it will go.
3. Pull the ball rod down and off. Store the ball rod for future use.

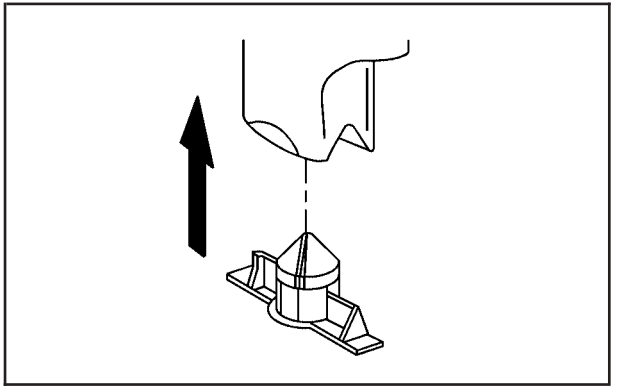

4. Reinstall the housing cover.

Safety Chains

You should always attach chains between your vehicle and your trailer. Cross the safety chains under the tongue of the trailer to help prevent the tongue from contacting the road if it becomes separated from the hitch. Instructions about safety chains may be provided by the hitch manufacturer or by the trailer manufacturer. Follow the manufacturer's recommendation for attaching safety chains and do not attach them to the bumper. Always leave just enough slack so you can turn with your rig. Never allow safety chains to drag on the ground.

Trailer Brakes

If your trailer weighs more than 1,000 lbs. (450 kg) loaded, then it needs its own brakes—and they must be adequate. Be sure to read and follow the instructions for the trailer brakes so you'll be able to install, adjust and maintain them properly.

Your trailer's brake system can tap into the vehicle's hydraulic brake system only if:

- The trailer parts can withstand 3,000 psi (20 650 kPa) of pressure.
- The trailer's brake system will use less than 0.02 cubic inch (0.3 cc) of fluid from your vehicle's master cylinder. Otherwise, both braking systems won't work well. You could even lose your brakes.

If everything checks out this far, then make the brake fluid tap at the port on the master cylinder that sends fluid to the rear brakes. But don't use copper tubing for this. If you do, it will bend and finally break off. Use steel brake tubing.

Driving with a Trailer

Towing a trailer requires a certain amount of experience. Before setting out for the open road, you'll want to get to know your rig. Acquaint yourself with the feel of handling and braking with the added weight of the trailer. And always keep in mind that the vehicle you are driving is now a good deal longer and not nearly as responsive as your vehicle is by itself.

Before you start, check all trailer hitch, parts and attachments, safety chains, electrical connector, lamps, tires and mirror adjustment. If the trailer has electric brakes, start your vehicle and trailer moving and then apply the trailer brake controller by hand to be sure the brakes are working. This lets you check your electrical connection at the same time.

During your trip, check occasionally to be sure that the load is secure, and that the lamps and any trailer brakes are still working.

Following Distance

Stay at least twice as far behind the vehicle ahead as you would when driving your vehicle without a trailer. This can help you avoid situations that require heavy braking and sudden turns.

Passing

You'll need more passing distance up ahead when you're towing a trailer. And, because you're a good deal longer, you'll need to go much farther beyond the passed vehicle before you can return to your lane.

Backing Up

Hold the bottom of the steering wheel with one hand. Then, to move the trailer to the left, just move that hand to the left. To move the trailer to the right, move your hand to the right. Always back up slowly and, if possible, have someone guide you.

Making Turns

Notice: **Making very sharp turns while trailering could cause the trailer to come in contact with the vehicle. Your vehicle could be damaged. Avoid making very sharp turns while trailering.**

When you're turning with a trailer, make wider turns than normal. Do this so your trailer won't strike soft shoulders, curbs, road signs, trees or other objects. Avoid jerky or sudden maneuvers. Signal well in advance.

Turn Signals When Towing a Trailer

When you tow a trailer, your vehicle has to have extra wiring and a heavy-duty turn signal flasher (included in the optional trailering package).

The arrows on your instrument panel will flash whenever you signal a turn or lane change. Properly hooked up, the trailer lamps will also flash, telling other drivers you're about to turn, change lanes or stop.

When towing a trailer, the arrows on your instrument panel will flash for turns even if the bulbs on the trailer are burned out. Thus, you may think drivers behind you are seeing your signal when they are not. It's important to check occasionally to be sure the trailer bulbs are still working.

Driving On Grades

Reduce speed and shift to a lower gear before you start down a long or steep downgrade. If you don't shift down, you might have to use your brakes so much that they would get hot and no longer work well.

Under normal conditions, use DRIVE (D) to tow a trailer. You may want to shift the transmission to THIRD (3) or, if necessary, a lower gear if the transmission shifts too often under heavy loads or hilly conditions.

When towing at high altitude on steep uphill grades, consider the following: Engine coolant will boil at a lower temperature than at normal altitudes. If you turn your engine off immediately after towing at high altitude on steep uphill grades, your vehicle may show signs similar to engine overheating. To avoid this, let the engine run while parked (preferably on level ground) with the transmission in PARK (P) for a few minutes before turning the engine off. If you do get the overheat warning, see *Engine Overheating on page 5-26*.

Parking on Hills

⚠ CAUTION:

You really should not park your vehicle, with a trailer attached, on a hill. If something goes wrong, your rig could start to move. People can be injured, and both your vehicle and the trailer can be damaged.

But if you ever have to park your rig on a hill, here's how to do it:

1. Apply your regular brakes, but don't shift into PARK (P) yet. Then turn your wheels into the curb if facing downhill or into traffic if facing uphill.
2. Have someone place chocks under the trailer wheels.
3. When the wheel chocks are in place, release the regular brakes until the chocks absorb the load.
4. Release the regular brakes.

When You Are Ready to Leave After Parking on a Hill

1. Apply your regular brakes and hold the pedal down while you:
   - Start your engine.
   - Shift into a gear.
   - Release the parking brake.
2. Let up on the brake pedal.
3. Drive slowly until the trailer is clear of the chocks.
4. Stop and have someone pick up and store the chocks.

Maintenance When Trailer Towing

Your vehicle will need service more often when you're pulling a trailer. See *Scheduled Maintenance on page 6-4* for more information. Things that are especially important in trailer operation are automatic transmission fluid (don't overfill), engine oil, axle lubricant, belt, cooling system and brake system. Each of these is covered in this manual. If you're trailering, it's a good idea to review these sections before you start your trip.

Check periodically to see that all hitch nuts and bolts are tight.

Trailer Wiring Harness

The trailer wiring is a four-wire harness assembly. The wires are blunted and taped to the wiring harness. The harness and wiring are stored under the vehicle on the driver's side. The harness has no connector and should be wired by a qualified electrical technician. The technician can use the following color code chart when connecting the wiring harness to your trailer.

- Black: Ground wire.
- Yellow: Left turn lamps.
- Dark Green: Right turn lamps.
- Brown: Parking lamps.

Securely attach the harness to the trailer, then tape or strap it to your vehicle's frame rail. Be sure you leave it loose enough so the wiring doesn't bend or break, but not so loose that it drags on the ground. Store the harness in its original place. Wrap the harness together and tie it neatly so it won't be damaged.

NOTES

Section 5 Service and Appearance Care

Service 5-3
Doing Your Own Service Work 5-3
Adding Equipment to the Outside of Your Vehicle 5-4

Fuel 5-4
Gasoline Octane 5-5
Gasoline Specifications 5-5
California Fuel 5-5
Additives 5-6
Fuels in Foreign Countries 5-6
Filling Your Tank 5-7
Filling a Portable Fuel Container 5-9

Checking Things Under the Hood 5-10
Hood Release 5-10
Engine Compartment Overview 5-12
Engine Oil 5-13
Engine Cover 5-18
Engine Air Cleaner/Filter 5-19
Automatic Transmission Fluid 5-20
Engine Coolant 5-23
Coolant Surge Tank Pressure Cap 5-26
Engine Overheating 5-26
Cooling System 5-28
Power Steering Fluid 5-31
Windshield Washer Fluid 5-31
Brakes 5-33
Battery 5-36
Jump Starting 5-37

Rear Axle 5-43

Headlamp Aiming 5-43

Bulb Replacement 5-43
Halogen Bulbs 5-44
Headlamps 5-44
Front Turn Signal, Sidemarker and Parking Lamps 5-45
Center High-Mounted Stoplamp (CHMSL) 5-47
Taillamps 5-47
Back-Up Lamps 5-48
Replacement Bulbs 5-48

Windshield Wiper Blade Replacement 5-49

Tires 5-51
Inflation - Tire Pressure 5-58
Tire Inspection and Rotation 5-59
When It Is Time for New Tires 5-60
Buying New Tires 5-60
Uniform Tire Quality Grading 5-61
Wheel Alignment and Tire Balance 5-63
Wheel Replacement 5-63

Section 5 Service and Appearance Care

Tire Chains 5-65
If a Tire Goes Flat 5-66
Tire Inflator Kit 5-67

Appearance Care 5-74
Cleaning the Inside of Your Vehicle 5-74
Care of Safety Belts 5-77
Weatherstrips 5-77
Cleaning the Outside of Your Vehicle 5-77
Sheet Metal Damage 5-80
Finish Damage 5-80
Underbody Maintenance 5-80
Chemical Paint Spotting 5-80
Vehicle Care/Appearance Materials 5-81

Vehicle Identification 5-82
Vehicle Identification Number (VIN) 5-82
Service Parts Identification Label 5-82

Electrical System 5-83
Add-On Electrical Equipment 5-83
Headlamps 5-83
Windshield Wiper Fuses 5-83
Power Windows and Other Power Options 5-83
Fuses and Circuit Breakers 5-84

Capacities and Specifications 5-92

Service

Your dealer knows your vehicle best and wants you to be happy with it. We hope you will go to your dealer for all your service needs. You will get genuine GM parts and GM-trained and supported service people.

We hope you will want to keep your GM vehicle all GM. Genuine GM parts have one of these marks:

California Proposition 65 Warning

Most motor vehicles, including this one, contain and/or emit chemicals known to the State of California to cause cancer and birth defects or other reproductive harm. Engine exhaust, many parts and systems (including some inside the vehicle), many fluids, and some component wear by-products contain and/or emit these chemicals.

Doing Your Own Service Work

If you want to do some of your own service work, you will want to use the proper service manual. It tells you much more about how to service your vehicle than this manual can. To order the proper service manual, see *Service Publications Ordering Information on page 7-13*.

Your vehicle has an air bag system. Before attempting to do your own service work, see *Servicing Your Air Bag-Equipped Vehicle on page 1-55*.

You should keep a record with all parts receipts and list the mileage and the date of any service work you perform. See *Maintenance Record on page 6-17*.

⚠ CAUTION:

You can be injured and your vehicle could be damaged if you try to do service work on a vehicle without knowing enough about it.

- **Be sure you have sufficient knowledge, experience, the proper replacement parts and tools before you attempt any vehicle maintenance task.**
- **Be sure to use the proper nuts, bolts and other fasteners. “English” and “metric” fasteners can be easily confused. If you use the wrong fasteners, parts can later break or fall off. You could be hurt.**

Adding Equipment to the Outside of Your Vehicle

Things you might add to the outside of your vehicle can affect the airflow around it. This may cause wind noise and affect windshield washer performance. Check with your dealer before adding equipment to the outside of your vehicle.

Fuel

The 8th digit of your vehicle identification number (VIN) shows the code letter or number that identifies your engine. You will find the VIN at the top left of the instrument panel. See *Vehicle Identification Number (VIN) on page 5-82*.

Gasoline Octane

Use regular unleaded gasoline with a posted octane of 87 or higher. If the octane is less than 87, you may get a heavy knocking noise when you drive. If this occurs, use a gasoline rated at 87 octane or higher as soon as possible. Otherwise, you might damage your engine.
A little pinging noise when you accelerate or drive uphill is considered normal. This does not indicate a problem exists or that a higher-octane fuel is necessary. If you are using 87 octane or higher-octane fuel and hear heavy knocking, your engine needs service.

Gasoline Specifications

It is recommended that gasoline meet specifications which were developed by automobile manufacturers around the world and contained in the World-Wide Fuel Charter which is available from the Alliance of Automobile Manufacturers at www.autoalliance.org/fuel_charter.htm. Gasoline meeting these specifications could provide improved driveability and emission control system performance compared to other gasoline.

Canada Only

In Canada, look for the “Auto Makers’ Choice” label on the pump.

California Fuel

If your vehicle is certified to meet California Emission Standards (see the underhood emission control label), it is designed to operate on fuels that meet California specifications. If this fuel is not available in states adopting California emissions standards, your vehicle will operate satisfactorily on fuels meeting federal specifications, but emission control system performance may be affected. The malfunction indicator lamp may turn on (see *Malfunction Indicator Lamp on page 3-32*) and your vehicle may fail a smog-check test. If this occurs, return to your authorized GM dealer for diagnosis. If it is determined that the condition is caused by the type of fuel used, repairs may not be covered by your warranty.

Additives

To provide cleaner air, all gasolines in the United States are now required to contain additives that will help prevent engine and fuel system deposits from forming, allowing your emission control system to work properly. You should not have to add anything to your fuel. However, some gasolines contain only the minimum amount of additive required to meet U.S. Environmental Protection Agency regulations. General Motors recommends that you buy gasolines that are advertised to help keep fuel injectors and intake valves clean. If your vehicle experiences problems due to dirty injectors or valves, try a different brand of gasoline.

Gasolines containing oxygenates, such as ethers and ethanol, and reformulated gasolines may be available in your area to contribute to clean air. General Motors recommends that you use these gasolines, particularly if they comply with the specifications described earlier.

Notice: **Your vehicle was not designed for fuel that contains methanol. Do not use fuel containing methanol. It can corrode metal parts in your fuel system and also damage the plastic and rubber parts. That damage would not be covered under your warranty.**

Some gasolines that are not reformulated for low emissions may contain an octane-enhancing additive called methylcyclopentadienyl manganese tricarbonyl (MMT); ask the attendant where you buy gasoline whether the fuel contains MMT. General Motors does not recommend the use of such gasolines. Fuels containing MMT can reduce the life of spark plugs and the performance of the emission control system may be affected. The malfunction indicator lamp may turn on. If this occurs, return to your authorized GM dealer for service.

Fuels in Foreign Countries

If you plan on driving in another country outside the United States or Canada, the proper fuel may be hard to find. Never use leaded gasoline or any other fuel not recommended in the previous text on fuel. Costly repairs caused by use of improper fuel would not be covered by your warranty.

To check the fuel availability, ask an auto club, or contact a major oil company that does business in the country where you will be driving.

Filling Your Tank

⚠ CAUTION:

Fuel vapor burns violently and a fuel fire can cause bad injuries. To help avoid injuries to you and others, read and follow all the instructions on the pump island. Turn off your engine when you are refueling. Do not smoke if you are near fuel or refueling your vehicle. Keep sparks, flames and smoking materials away from fuel. Do not leave the fuel pump unattended when refueling your vehicle — this is against the law in some places. Keep children away from the fuel pump; never let children pump fuel.

The tethered fuel cap is behind a hinged door on the driver's side of the vehicle.

While refueling, let the fuel cap hang by the tether below the fuel fill opening.

To remove the fuel cap, turn it slowly to the left (counterclockwise). The fuel cap has a spring to it; if you let go of the cap too soon, it will spring back to the right.

⚠ CAUTION:

If you spill fuel and then something ignites it, you could be badly burned. Fuel can spray out on you if you open the fuel cap too quickly. This spray can happen if your tank is nearly full, and is more likely in hot weather. Open the fuel cap slowly and wait for any "hiss" noise to stop. Then unscrew the cap all the way.

⚠ CAUTION:

If a fire starts while you are refueling, do not remove the nozzle. Shut off the flow of fuel by shutting off the pump or by notifying the station attendant. Leave the area immediately.

Be careful not to spill fuel. Clean fuel from painted surfaces as soon as possible. See *Cleaning the Outside of Your Vehicle on page 5-77*.

When you put the fuel cap back on, turn it to the right (clockwise) until you hear a clicking sound. Make sure you fully install the cap. The diagnostic system can determine if the fuel cap has been left off or improperly installed. This would allow fuel to evaporate in to the atmosphere. See *Malfunction Indicator Lamp on page 3-32*.

Notice: **If you need a new fuel cap, be sure to get the right type. Your dealer can get one for you. If you get the wrong type, it may not fit properly. This may cause your malfunction indicator lamp to light and may damage your fuel tank and emissions system. See *Malfunction Indicator Lamp on page 3-32*.**

Filling a Portable Fuel Container

⚠ CAUTION:

Never fill a portable fuel container while it is in your vehicle. Static electricity discharge from the container can ignite the gasoline vapor. You can be badly burned and your vehicle damaged if this occurs. To help avoid injury to you and others:

- **Dispense gasoline only into approved containers.**
- **Do not fill a container while it is inside a vehicle, in a vehicle's trunk, pickup bed or on any surface other than the ground.**
- **Bring the fill nozzle in contact with the inside of the fill opening before operating the nozzle. Contact should be maintained until the filling is complete.**
- **Do not smoke while pumping gasoline.**

Checking Things Under the Hood

⚠ CAUTION:

Things that burn can get on hot engine parts and start a fire. These include liquids like fuel, oil, coolant, brake fluid, windshield washer and other fluids, and plastic or rubber. You or others could be burned. Be careful not to drop or spill things that will burn onto a hot engine.

Hood Release

To open the hood, do the following:

1. Pull the handle located inside the vehicle on the lower left side of the instrument panel.

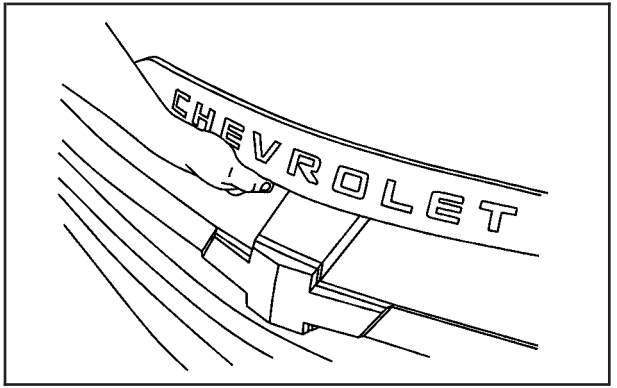

2. Release the secondary latch at the front of the hood.
3. After you have partially lifted the hood, gas struts will automatically take over to lift and hold the hood in the fully open position.

Before closing the hood, be sure all the filler caps are on properly. Then, pull the hood down to close. You must drop the hood from about 12 inches (30 cm) or less to latch the hood properly.

Engine Compartment Overview

When you open the hood on the engine, you'll see:

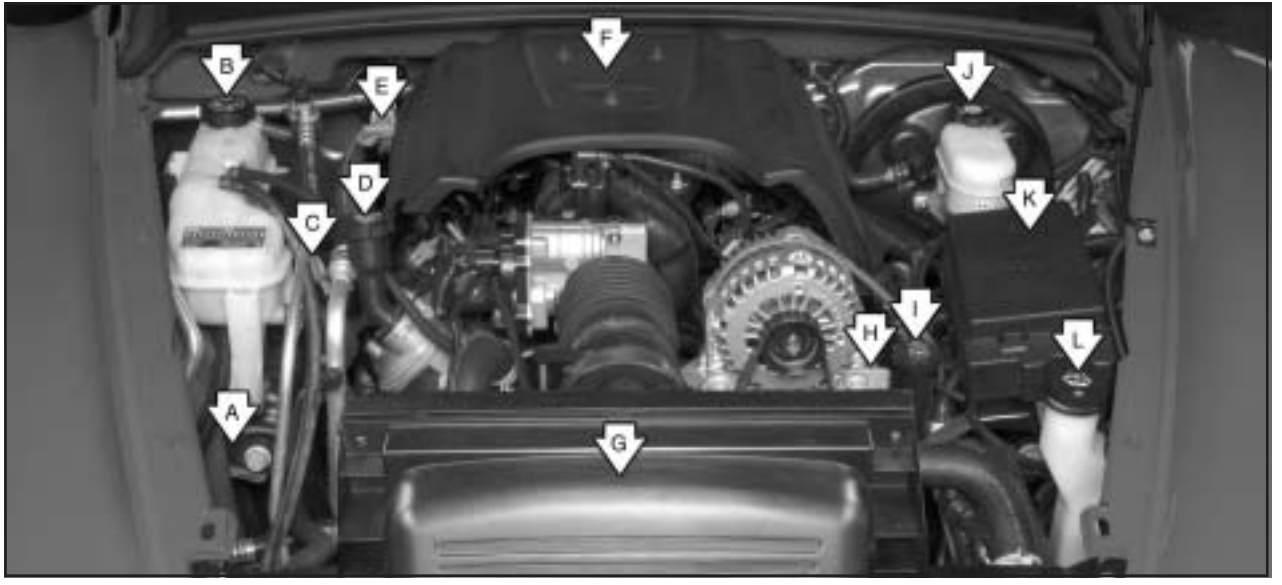

A. Remote Positive Terminal. See *Jump Starting on page 5-37* for more information.

B. Coolant Surge Tank. See *Engine Coolant on page 5-23* for more information.

C. Engine Oil Dipstick. See *Engine Oil on page 5-13* for more information.

D. Engine Oil Fill Cap. See *Engine Oil on page 5-13* for more information.

E. Automatic Transmission Fluid Dipstick. See *Automatic Transmission Fluid on page 5-20* for more information.

F. Engine Cover. See *Engine Cover on page 5-18* for more information.

G. Engine Air Cleaner/Filter. See *Engine Air Cleaner/Filter on page 5-19* for more information.

H. Remote Negative Terminal. See *Jump Starting on page 5-37* for more information.

I. Power Steering Reservoir. See *Power Steering Fluid on page 5-31* for more information.

J. Brake Master Cylinder. See *Brakes on page 5-33* for more information.

K. Underhood Fuse Block Cover. See *Fuses and Circuit Breakers on page 5-84* for more information.

L. Windshield Washer Fluid Reservoir. See *Windshield Washer Fluid on page 5-31* for more information.

Engine Oil

Checking Engine Oil

It is a good idea to check your engine oil every time you get fuel. In order to get an accurate reading, the oil must be warm and the vehicle must be on level ground.

The engine oil dipstick handle is a yellow loop. See *Engine Compartment Overview on page 5-12* for the location of the engine oil dipstick.

Turn off the engine and give the oil several minutes to drain back into the oil pan. If you don't, the oil dipstick might not show the actual level.

Pull out the dipstick and clean it with a paper towel or cloth, then push it back in all the way. Remove it again, keeping the tip down, and check the level.

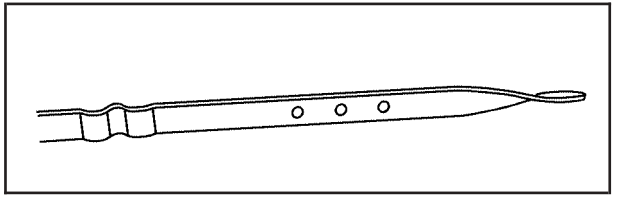

When to Add Engine Oil

If the oil is at or below the hole at the tip of the dipstick, then you will need to add at least one quart of oil. But you must use the right kind. This section explains what kind of oil to use. For engine oil crankcase capacity, see *Capacities and Specifications on page 5-92*.

Notice: **Do not add too much oil. If your engine has so much oil that the oil level gets above the upper hole, your engine could be damaged.**

See *Engine Compartment Overview on page 5-12* for the location of the engine oil fill cap.

Be sure to add enough oil to put the level somewhere in the proper operating range. Push the dipstick all the way back in when you are through.

What Kind of Engine Oil to Use

Look for two things:

- GM6094M

  Your vehicle's engine requires oil meeting GM Standard GM6094M. You should look for and use only an oil that meets GM Standard GM6094M.

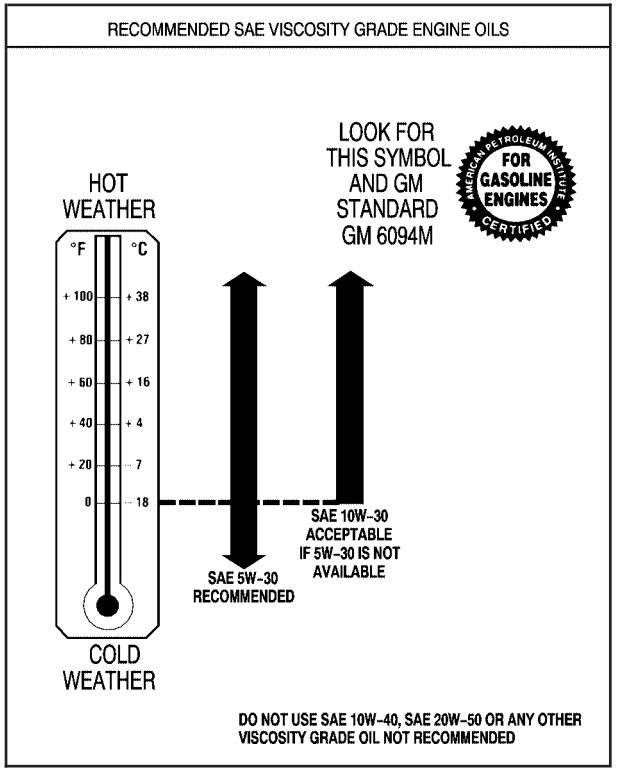

- SAE 5W-30

  As shown in the viscosity chart, SAE 5W-30 is best for your vehicle. However, if it is going to be 0°F (–18°C) or above and SAE 5W-30 is not available, you may use SAE 10W-30.

  These numbers on an oil container show its viscosity, or thickness. Do not use other viscosity oils such as SAE 20W-50.

Oils meeting these requirements should also have the starburst symbol on the container. This symbol indicates that the oil has been certified by the American Petroleum Institute (API).

You should look for this information on the oil container, and use *only* those oils that are identified as meeting GM Standard GM6094M and have the starburst symbol on the front of the oil container.

Notice: **Use only engine oil identified as meeting GM Standard GM6094M and showing the American Petroleum Institute Certified For Gasoline Engines starburst symbol. Failure to use the recommended oil can result in engine damage not covered by your warranty.**

GM Goodwrench® oil meets all the requirements for your vehicle.

If you are in an area of extreme cold, where the temperature falls below –20°F (–29°C), it is recommended that you use either an SAE 5W-30 synthetic oil or an SAE 0W-30 oil. Both will provide easier cold starting and better protection for your engine at extremely low temperatures.

Engine Oil Additives

Do not add anything to your oil. The recommended oils with the starburst symbol that meet GM Standard GM6094M are all you will need for good performance and engine protection.

When to Change Engine Oil (GM Oil Life System)

Your vehicle has a computer system that lets you know when to change the engine oil and filter. This is based on engine revolutions and engine temperature, and not on mileage. Based on driving conditions, the mileage at which an oil change will be indicated can vary considerably. For the oil life system to work properly, you must reset the system every time the oil is changed.

When the system has calculated that oil life has been diminished, it will indicate that an oil change is necessary. A change engine oil light will come on. Change your oil as soon as possible within the next two times you stop for fuel. It is possible that, if you are driving under the best conditions, the oil life system may not indicate that an oil change is necessary for over a year. However, your engine oil and filter must be changed at least once a year and at this time the system must be reset. Your dealer has GM-trained service people who will perform this work using genuine GM parts and reset the system. It is also important to check your oil regularly and keep it at the proper level.

If the system is ever reset accidentally, you must change your oil at 3,000 miles (5 000 km) since your last oil change. Remember to reset the oil life system whenever the oil is changed.

How to Reset the Change Engine Oil Light

The GM Oil Life System calculates when to change your engine oil and filter based on vehicle use. Anytime your oil is changed, reset the system so it can calculate when the next oil change is required. If a situation occurs where you change your oil prior to a change engine oil light being turned on, reset the system.

Always reset the engine oil life system to 100% after every oil change. It will not reset itself. To reset the change engine oil light, do the following:

1. Press the fuel information button until ENGINE OIL LIFE appears on the Driver Information Center (DIC). See *DIC Controls and Displays on page 3-44* for more information.
2. Press and hold the select button. The engine oil life percentage will change to 100.
3. Turn the key to OFF.

If the change engine oil light comes back on when you start your vehicle, the engine oil life system has not reset. Repeat the procedure.

What to Do with Used Oil

Used engine oil contains certain elements that may be unhealthy for your skin and could even cause cancer. Do not let used oil stay on your skin for very long. Clean your skin and nails with soap and water, or a good hand cleaner. Wash or properly dispose of clothing or rags containing used engine oil. See the manufacturer's warnings about the use and disposal of oil products.

Used oil can be a threat to the environment. If you change your own oil, be sure to drain all the oil from the filter before disposal. Never dispose of oil by putting it in the trash, pouring it on the ground, into sewers, or into streams or bodies of water. Instead, recycle it by taking it to a place that collects used oil. If you have a problem properly disposing of your used oil, ask your dealer, a service station or a local recycling center for help.

Engine Cover

Your vehicle has a removable engine cover.

To remove the engine cover do the following:

1. Remove the engine cover insert if your vehicle has one. See “Engine Cover Insert” following for instructions.
2. Unscrew the three bolts from the engine and lift off the cover.
3. To reinstall the engine cover, reverse the steps.

Engine Cover Insert

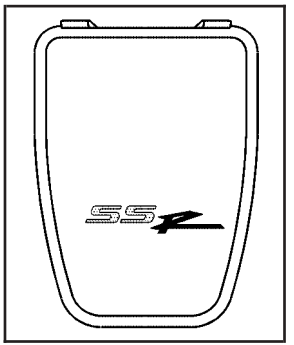

Your vehicle may have an engine cover insert.

The engine cover insert must be removed to access the bolts that secure the engine cover to the vehicle.

Use the following procedure to remove the engine cover insert:

1. Using a flat-bladed tool, lift up on the front outboard edges of the engine cover insert to release the clips.
2. Slide the engine cover insert rearward to release the insert from the two hooks located at the rear outboard edges of the insert.
3. Lift off the engine cover insert.
4. To reinstall the insert, reverse the steps.

Engine Air Cleaner/Filter

The engine air cleaner/filter is located at the center front of the engine compartment. See *Engine Compartment Overview on page 5-12* for location of the engine air cleaner/filter.

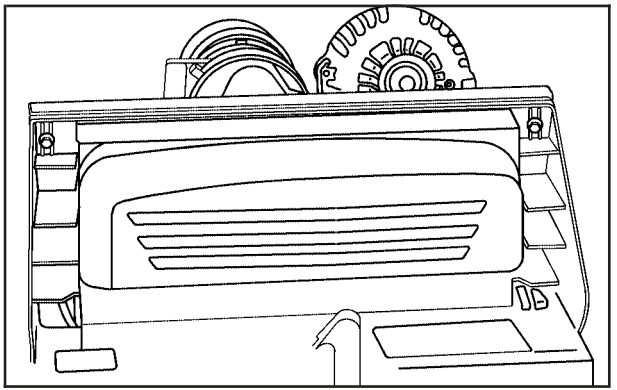

When to Inspect the Engine Air Cleaner/Filter

Inspect the air cleaner/filter at each oil change and replace it at the first oil change after 25,000 miles (41 500 km). See *Scheduled Maintenance on page 6-4* for more information.

How to Inspect the Engine Air Cleaner/Filter

To inspect the air cleaner/filter, remove the filter from the vehicle and lightly shake the filter to release loose dust and dirt. If the filter remains caked with dirt, a new filter is required.

To inspect or replace the filter, do the following:

1. Remove the two bolts on the engine air cleaner/filter and lift off the cover.
2. Twist out the old engine air cleaner/filter and replace it, if necessary.
3. Reinstall the cover.

⚠ CAUTION:

Operating the engine with the air cleaner/filter off can cause you or others to be burned. The air cleaner not only cleans the air, it helps to stop flame if the engine backfires. If it is not there and the engine backfires, you could be burned. Do not drive with it off, and be careful working on the engine with the air cleaner/ filter off.

Notice: **If the air cleaner/filter is off, a backfire can cause a damaging engine fire. And, dirt can easily get into your engine, which will damage it. Always have the air cleaner/filter in place when you are driving.**

Automatic Transmission Fluid

When to Check and Change the Automatic Transmission Fluid

A good time to check your automatic transmission fluid level is when the engine oil is changed.

Change both the fluid and filter at the first oil change after 25,000 miles (41 500 km) if the vehicle is mainly driven under one or more of these conditions:

- In heavy city traffic where the outside temperature regularly reaches 90°F (32°C) or higher
- In hilly or mountainous terrain
- When doing frequent trailer towing
- Uses such as found in taxi, police or delivery service

If you do not use your vehicle under any of these conditions, change the fluid and filter at the first oil change after 50,000 miles (83 000 km).

See *Scheduled Maintenance on page 6-4*.

How to Check the Automatic Transmission Fluid

Because this operation can be difficult, you may choose to have this done at the dealership service department.

If you do it yourself, be sure to follow all the instructions here, or you could get a false reading on the dipstick.

Notice: **Too much or too little fluid can damage your transmission. Too much can mean that some of the fluid could come out and fall on hot engine part or exhaust system parts, starting a fire. Too little fluid could cause the transmission to overheat. Be sure to get an accurate reading if you check your transmission fluid.**

Wait at least 30 minutes before checking the transmission fluid level if you have been driving:

- When outside temperatures are above 90°F (32°C)
- At high speed for quite a while
- In heavy traffic — especially in hot weather
- While pulling a trailer

To get the right reading, the fluid should be at normal operating temperature, which is 180°F to 200°F (82°C to 93°C). If your vehicle has the auxiliary gage package, you can check the transmission fluid temperature. See *Auxiliary Gage Package on page 3-41* for more information.

Get the vehicle warmed up by driving about 15 miles (24 km) when outside temperatures are above 50°F (10°C). If it's colder than 50°F (10°C), drive the vehicle in THIRD (3) until the engine temperature gage moves and then remains steady for 10 minutes.

A cold fluid check can be made after the vehicle has been sitting for eight hours or more with the engine off, but this is used only as a reference. Let the engine run at idle for five minutes if outside temperatures are 50°F (10°C) or more. If it's colder than 50°F (10°C), you may have to idle the engine longer. Should the fluid level be low during this cold check, you must check the fluid hot before adding fluid. Checking the fluid hot will give you a more accurate reading of the fluid level.

Checking the Automatic Transmission Fluid Level

Prepare your vehicle as follows:

- Park your vehicle on a level place. Keep the engine running.
- With the parking brake applied, place the shift lever in PARK (P).
- With your foot on the brake pedal, move the shift lever through each gear range, pausing for about three seconds in each range. Then, position the shift lever in PARK (P).
- Let the engine run at idle for three minutes or more.

Then, without shutting off the engine, follow these steps:

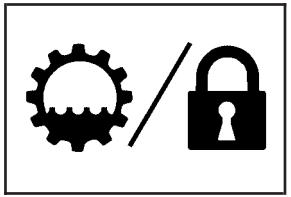

The transmission dipstick handle may have this symbol on it or say TRANS/LOCK.

The transmission dipstick is located on the passenger's side of the vehicle in the rear of the engine compartment. See *Engine Compartment Overview on page 5-12* for more information on location.

1. Flip the handle up and then pull out the dipstick and wipe it with a clean rag or paper towel.
2. Push it back in all the way, wait three seconds and then pull it back out again.

3. Check both sides of the dipstick, and read the lower level. The fluid level must be in the COLD area, below the cross-hatched area, for a cold check or in the HOT area or cross-hatched area for a hot check.
4. If the fluid level is in the acceptable range, push the dipstick back in all the way; then flip the handle down to lock the dipstick in place.

How to Add Automatic Transmission Fluid

Refer to the Maintenance Schedule to determine what kind of transmission fluid to use. See *Recommended Fluids and Lubricants on page 6-13*.

Add fluid only after checking the transmission fluid while it is hot. (A cold check is used only as a reference.) If the fluid level is low, add only enough of the proper fluid to bring the level up to the HOT area for a hot check. It doesn't take much fluid, generally less than one pint (0.5 L). Don't overfill.

Notice: **We recommend you use only fluid labeled DEXRON®-III, because fluid with that label is made especially for your automatic transmission. Damage caused by fluid other than DEXRON®-III is not covered by your new vehicle warranty.**

- After adding fluid, recheck the fluid level as described under "How to Check" earlier.
- When the correct fluid level is obtained, push the dipstick back in all the way; then flip the handle down to lock the dipstick in place.

Engine Coolant

The cooling system in your vehicle is filled with DEX-COOL® engine coolant. This coolant is designed to remain in your vehicle for 5 years or 150,000 miles (240 000 km), whichever occurs first, if you add only DEX-COOL® extended life coolant.

The following explains your cooling system and how to add coolant when it is low. If you have a problem with engine overheating or if you need to add coolant to your radiator, see *Engine Overheating on page 5-26*.

A 50/50 mixture of clean, drinkable water and DEX-COOL® coolant will:

- Give freezing protection down to –34°F (–37°C).
- Give boiling protection up to 265°F (129°C).
- Protect against rust and corrosion.
- Help keep the proper engine temperature.
- Let the warning lights and gages work as they should.

Notice: **Using coolant other than DEX-COOL® may cause premature engine, heater core or radiator corrosion. In addition, the engine coolant may require changing sooner, at 30,000 miles (50 000 km) or 24 months, whichever occurs first. Any repairs would not be covered by your warranty. Always use DEX-COOL® (silicate-free) coolant in your vehicle.**

What to Use

Use a mixture of one-half *clean, drinkable water* and one-half DEX-COOL® coolant which won't damage aluminum parts. If you use this coolant mixture, you don't need to add anything else.

⚠ CAUTION:

Adding only plain water to your cooling system can be dangerous. Plain water, or some other liquid such as alcohol, can boil before the proper coolant mixture will. Your vehicle's coolant warning system is set for the proper coolant mixture. With plain water or the wrong mixture, your engine could get too hot but you would not get the overheat warning. Your engine could catch fire and you or others could be burned. Use a 50/50 mixture of clean, drinkable water and DEX-COOL® coolant.

Notice: **If you use an improper coolant mixture, your engine could overheat and be badly damaged. The repair cost would not be covered by your warranty. Too much water in the mixture can freeze and crack the engine, radiator, heater core and other parts.**

If you have to add coolant more than four times a year, have your dealer check your cooling system.

Notice: **If you use the proper coolant, you do not have to add extra inhibitors or additives which claim to improve the system. These can be harmful.**

Checking Coolant

The engine coolant surge tank is located on the passenger's side of the vehicle at the rear of the engine compartment. See *Engine Compartment Overview on page 5-12* for more information on location.

The vehicle must be on a level surface. When your engine is cold, the coolant level should be at the FULL COLD mark or a little higher.

Adding Coolant

If you need more coolant, add the proper DEX-COOL® coolant mixture *to the coolant surge tank,* but be careful not to spill it.

⚠ CAUTION:

Turning the surge tank pressure cap when the engine and radiator are hot can allow steam and scalding liquids to blow out and burn you badly. Never turn the surge tank pressure cap — even a little — when the engine and radiator are hot.

⚠ CAUTION:

You can be burned if you spill coolant on hot engine parts. Coolant contains ethylene glycol, and it will burn if the engine parts are hot enough. Do not spill coolant on a hot engine.

Coolant Surge Tank Pressure Cap

Notice: **If the pressure cap is not tightly installed, coolant loss and possible engine damage may occur. Be sure the cap is properly and tightly secured.**

Engine Overheating

You will find a coolant temperature gage on your vehicle's instrument panel. See *Engine Coolant Temperature Gage on page 3-32*.

If Steam Is Coming From Your Engine

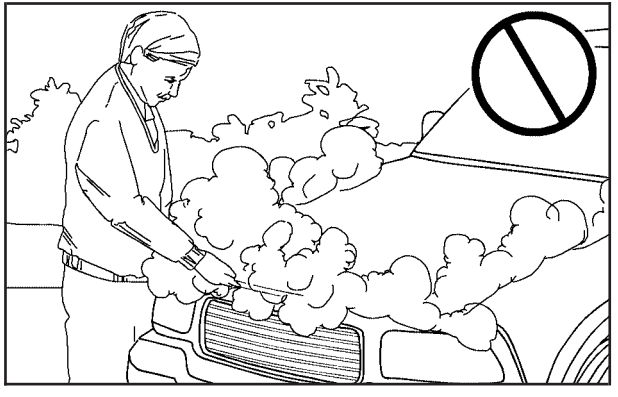

⚠ CAUTION:

Steam from an overheated engine can burn you badly, even if you just open the hood. Stay away from the engine if you see or hear steam coming from it. Just turn it off and get everyone away from the vehicle until it cools down. Wait until there is no sign of steam or coolant before you open the hood.

If you keep driving when your engine is overheated, the liquids in it can catch fire. You or others could be badly burned. Stop your engine if it overheats, and get out of the vehicle until the engine is cool.

Notice: **If your engine catches fire because you keep driving with no coolant, your vehicle can be badly damaged. The costly repairs would not be covered by your warranty.**

If No Steam Is Coming From Your Engine

If you get an engine overheat warning but see or hear no steam, the problem may not be too serious. Sometimes the engine can get a little too hot when you:

- Climb a long hill on a hot day.
- Stop after high-speed driving.
- Idle for long periods in traffic.
- Tow a trailer. See “Driving on Grades” under *Towing a Trailer on page 4-39*.

If you get the overheat warning with no sign of steam, try this for a minute or so:

1. In heavy traffic, let the engine idle in NEUTRAL (N) while stopped. If it is safe to do so, pull off the road, shift to PARK (P) or NEUTRAL (N) and let the engine idle.
2. Turn on your heater to full hot at the highest fan speed and open the window as necessary.

If you no longer have the overheat warning, you can drive. Just to be safe, drive slower for about 10 minutes. If the warning doesn’t come back on, you can drive normally.

If the warning continues, pull over, stop, and park your vehicle right away.

If there’s still no sign of steam, idle the engine for three minutes while you’re parked. If you still have the warning, turn off the engine and get everyone out of the vehicle until it cools down.

You may decide not to lift the hood but to get service help right away.

Cooling System

When you decide it's safe to lift the hood, here's what you'll see:

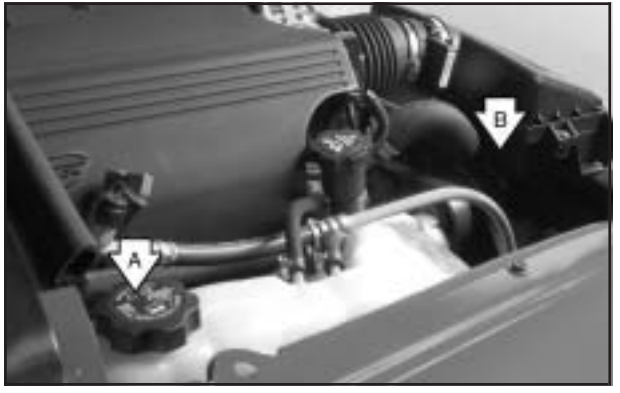

A. Coolant Surge Tank

B. Engine Cooling Fan

If the coolant inside the coolant surge tank is boiling, don't do anything else until it cools down. The vehicle should be parked on a level surface.

When the engine is cold, the coolant level should be at least up to the FULL COLD mark. If it is not, you may have a leak at the surge cap or in the radiator hoses, heater hoses, radiator, water pump or somewhere else in the cooling system.

⚠ CAUTION:

Heater and radiator hoses, and other engine parts, can be very hot. Do not touch them. If you do, you can be burned.

Do not run the engine if there is a leak. If you run the engine, it could lose all coolant. That could cause an engine fire, and you could be burned. Get any leak fixed before you drive the vehicle.

If there seems to be no leak, start the engine again.

Notice: **Engine damage from running your engine without coolant is not covered by your warranty.**

Notice: **Using coolant other than DEX-COOL® may cause premature engine, heater core or radiator corrosion. In addition, the engine coolant may require changing sooner, at 30,000 miles (50 000 km) or 24 months, whichever occurs first. Any repairs would not be covered by your warranty. Always use DEX-COOL® (silicate-free) coolant in your vehicle.**

How to Add Coolant to the Coolant Surge Tank

If you have not found a problem yet, but the coolant level is not at the FULL COLD mark, add a 50/50 mixture of *clean drinkable water* and DEX-COOL® engine coolant at the coolant recovery tank. See *Engine Coolant on page 5-23* for more information.

⚠ CAUTION:

Adding only plain water to your cooling system can be dangerous. Plain water, or some other liquid such as alcohol, can boil before the proper coolant mixture will. Your vehicle's coolant warning system is set for the proper coolant mixture. With plain water or the wrong mixture, your engine could get too hot but you would not get the overheat warning. Your engine could catch fire and you or others could be burned. Use a 50/50 mixture of clean, drinkable water and DEX-COOL® coolant.

Notice: **In cold weather, water can freeze and crack the engine, radiator, heater core and other parts. Use the recommended coolant and the proper coolant mixture.**

⚠ CAUTION:

You can be burned if you spill coolant on hot engine parts. Coolant contains ethylene glycol and it will burn if the engine parts are hot enough. Do not spill coolant on a hot engine.

When the coolant in the coolant surge tank is at the FULL COLD mark, start your vehicle.

Power Steering Fluid

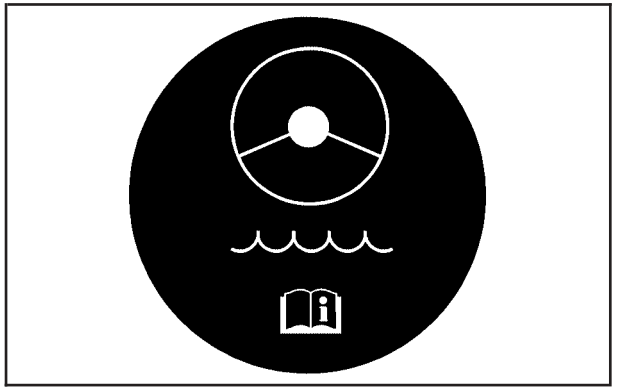

The power steering fluid reservoir is located in the front of the engine compartment on the driver's side of the vehicle. The cap to the reservoir has this symbol on it.

When to Check Power Steering Fluid

It is not necessary to regularly check power steering fluid unless you suspect there is a leak in the system or you hear an unusual noise. A fluid loss in this system could indicate a problem. Have the system inspected and repaired. See *Engine Compartment Overview on page 5-12* for more information on location.

How to Check Power Steering Fluid

Turn the key off, let the engine compartment cool down, wipe the cap and the top of the reservoir clean, then unscrew the cap and wipe the dipstick with a clean rag. Replace the cap and completely tighten it. Then remove the cap again and look at the fluid level on the dipstick.

The level should be at the FULL mark. If necessary, add only enough fluid to bring the level up to the mark.

What to Use

To determine what kind of fluid to use, see *Recommended Fluids and Lubricants on page 6-13*. Always use the proper fluid. Failure to use the proper fluid can cause leaks and damage hoses and seals.

Windshield Washer Fluid

What to Use

When you need windshield washer fluid, be sure to read the manufacturer's instructions before use. If you will be operating your vehicle in an area where the temperature may fall below freezing, use a fluid that has sufficient protection against freezing. See *Engine Compartment Overview on page 5-12* for reservoir location.

Adding Washer Fluid

Open the cap with the washer symbol on it.
Add washer fluid until the tank is full.

Notice:

- **When using concentrated washer fluid, follow the manufacturer's instructions for adding water.**
- **Do not mix water with ready-to-use washer fluid. Water can cause the solution to freeze and damage your washer fluid tank and other parts of the washer system. Also, water does not clean as well as washer fluid.**
- **Fill your washer fluid tank only three-quarters full when it is very cold. This allows for expansion if freezing occurs, which could damage the tank if it is completely full.**
- **Do not use engine coolant (antifreeze) in your windshield washer. It can damage your washer system and paint.**

Brakes

Brake Fluid

Your brake master cylinder reservoir is filled with DOT-3 brake fluid. See *Engine Compartment Overview on page 5-12* for the location of the reservoir.

There are only two reasons why the brake fluid level in the reservoir might go down. The first is that the brake fluid goes down to an acceptable level during normal brake lining wear. When new linings are put in, the fluid level goes back up. The other reason is that fluid is leaking out of the brake system. If it is, you should have your brake system fixed, since a leak means that sooner or later your brakes will not work well, or will not work at all.

So, it is not a good idea to “top off” your brake fluid. Adding brake fluid will not correct a leak. If you add fluid when your linings are worn, then you will have too much fluid when you get new brake linings. You should add (or remove) brake fluid, as necessary, only when work is done on the brake hydraulic system.

⚠ CAUTION:

If you have too much brake fluid, it can spill on the engine. The fluid will burn if the engine is hot enough. You or others could be burned, and your vehicle could be damaged. Add brake fluid only when work is done on the brake hydraulic system. See “Checking Brake Fluid” in this section.

Refer to the Maintenance Schedule to determine when to check your brake fluid. See *Scheduled Maintenance on page 6-4*.

Checking Brake Fluid

You can check the brake fluid without taking off the cap.

Just look at the brake fluid reservoir. The fluid level should be above MIN. If it is not, have your brake system checked to see if there is a leak.

After work is done on the brake hydraulic system, make sure the level is above the MIN but not over the MAX mark.

What to Add

When you do need brake fluid, use only DOT-3 brake fluid. Use new brake fluid from a sealed container only. See *Recommended Fluids and Lubricants on page 6-13*.

Always clean the brake fluid reservoir cap and the area around the cap before removing it. This will help keep dirt from entering the reservoir.

⚠ CAUTION:

With the wrong kind of fluid in your brake system, your brakes may not work well, or they may not even work at all. This could cause a crash. Always use the proper brake fluid.

Notice:

- **Using the wrong fluid can badly damage brake system parts. For example, just a few drops of mineral-based oil, such as engine oil, in your brake system can damage brake system parts so badly that they will have to be replaced. Do not let someone put in the wrong kind of fluid.**
- **If you spill brake fluid on your vehicle's painted surfaces, the paint finish can be damaged. Be careful not to spill brake fluid on your vehicle. If you do, wash it off immediately. See *Appearance Care on page 5-74*.**

Brake Wear

Your vehicle has four-wheel disc brakes.

Disc brake pads have built-in wear indicators that make a high-pitched warning sound when the brake pads are worn and new pads are needed. The sound may come and go or be heard all the time your vehicle is moving (except when you are pushing on the brake pedal firmly).

⚠ CAUTION:

The brake wear warning sound means that soon your brakes will not work well. That could lead to an accident. When you hear the brake wear warning sound, have your vehicle serviced.

Notice: **Continuing to drive with worn-out brake pads could result in costly brake repair.**

Some driving conditions or climates may cause a brake squeal when the brakes are first applied or lightly applied. This does not mean something is wrong with your brakes.

Properly torqued wheel nuts are necessary to help prevent brake pulsation. When tires are rotated, inspect brake pads for wear and evenly tighten wheel nuts in the proper sequence to GM torque specifications.

Brake linings should always be replaced as complete axle sets.

Brake Pedal Travel

See your dealer if the brake pedal does not return to normal height, or if there is a rapid increase in pedal travel. This could be a sign of brake trouble.

Brake Adjustment

Every time you make a brake stop, your disc brakes adjust for wear.

Replacing Brake System Parts

The braking system on a vehicle is complex. Its many parts have to be of top quality and work well together if the vehicle is to have really good braking. Your vehicle was designed and tested with top-quality GM brake parts. When you replace parts of your braking system — for example, when your brake linings wear down and you need new ones put in — be sure you get new approved GM replacement parts. If you do not, your brakes may no longer work properly. For example, if someone puts in brake linings that are wrong for your vehicle, the balance between your front and rear brakes can change — for the worse. The braking performance you have come to expect can change in many other ways if someone puts in the wrong replacement brake parts.

Battery

Your new vehicle comes with a maintenance free ACDelco® battery. When it is time for a new battery, get one that has the replacement number shown on the original battery's label. We recommend an ACDelco® battery. The battery is located under the rear of the vehicle.

Warning: Battery posts, terminals and related accessories contain lead and lead compounds, chemicals known to the State of California to cause cancer and reproductive harm. Wash hands after handling.

Vehicle Storage

If you are not going to drive your vehicle for 25 days or more, remove the black, negative (–) cable from the battery. This will help keep your battery from running down.

⚠ CAUTION:

Batteries have acid that can burn you and gas that can explode. You can be badly hurt if you are not careful. See *Jump Starting on page 5-37* for tips on working around a battery without getting hurt.

Contact your dealer to learn how to prepare your vehicle for longer storage periods.

Also, for your audio system, see *Theft-Deterrent Feature on page 3-85*.

Jump Starting

If your battery has run down, you may want use another vehicle and some jumper cables to start your vehicle. Be sure to follow the steps below to do it safely.

⚠ CAUTION:

Batteries can hurt you. They can be dangerous because:

- **They contain acid that can burn you.**
- **They contain gas that can explode or ignite.**
- **They contain enough electricity to burn you.**

If you do not follow these steps exactly, some or all of these things can hurt you.

Notice: **Ignoring these steps could result in costly damage to your vehicle that would not be covered by your warranty.**

Trying to start your vehicle by pushing or pulling it will not work, and it could damage your vehicle.

1. Check the other vehicle. It must have a 12-volt battery with a negative ground system.

Notice: **If the other vehicle's system is not a 12-volt system with a negative ground, both vehicles can be damaged. Only use vehicles with 12-volt systems with negative grounds to jump start your vehicle.**

2. Get the vehicles close enough so the jumper cables can reach, but be sure the vehicles aren't touching each other. If they are, it could cause a ground connection you don't want. You wouldn't be able to start your vehicle and the bad grounding could damage the electrical systems.

   To avoid the possibility of the vehicles rolling, set the parking brake firmly on both vehicles involved in the jump start procedure. Put your transmission in PARK (P) before setting the parking brake.

Notice: **If you leave your radio or other accessories on during the jump starting procedure, they could be damaged. The repairs would not be covered by your warranty. Always turn off your radio and other accessories when jump starting your vehicle.**

3. Turn off the ignition on both vehicles. Unplug unnecessary accessories plugged into the cigarette lighter or in the accessory power outlets. Turn off the radio and all lamps that aren't needed. This will avoid sparks and help save both batteries. And it could save your radio.
4. Open the hoods and locate the positive (+) and negative (–) terminal locations on the other vehicle. Your vehicle has a remote positive (+) jump starting terminal and a remote negative (–) jump starting terminal. You should always use these remote terminals instead of the terminals on the battery.

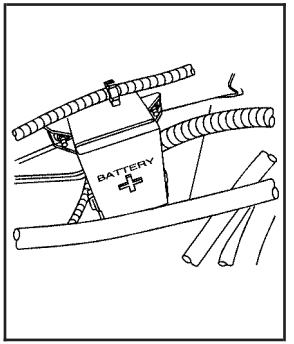

The remote positive (+) terminal is located in the engine compartment on the passenger's side of the vehicle.

Press inward on the tabs located on the outboard sides of the remote positive (+) terminal cover and pull outward to access the terminal.

The remote negative (–) terminal is located near the power steering fluid reservoir. It is marked "GND (–)." See *Engine Compartment Overview on page 5-12* for more information on location.

You will not see the battery of your vehicle under the hood. It is located on the rear underside of the vehicle. You will not need to access the battery for jump starting. The remote positive (+) terminal is for that purpose.

⚠ CAUTION:

An electric fan can start up even when the engine is not running and can injure you. Keep hands, clothing and tools away from any underhood electric fan.

⚠ CAUTION:

Using a match near a battery can cause battery gas to explode. People have been hurt doing this, and some have been blinded. Use a flashlight if you need more light.

Be sure the battery has enough water. You do not need to add water to the ACDelco® battery installed in your new vehicle. But if a battery has filler caps, be sure the right amount of fluid is there. If it is low, add water to take care of that first. If you do not, explosive gas could be present.

Battery fluid contains acid that can burn you. Do not get it on you. If you accidentally get it in your eyes or on your skin, flush the place with water and get medical help immediately.

⚠ CAUTION:

Fans or other moving engine parts can injure you badly. Keep your hands away from moving parts once the engine is running.

5. Check that the jumper cables don't have loose or missing insulation. If they do, you could get a shock. The vehicles could also be damaged, too.

   Before you connect the cables, here are some basic things you should know. Positive (+) will go to positive (+) or to a remote positive (+) terminal if the vehicle has one. Negative (–) will go to a heavy, unpainted metal engine part or to a remote negative (–) terminal if the vehicle has one.

   Don't connect positive (+) to the negative (–) or you will get a short that would damage the battery and maybe other parts, too. And don't connect the negative (–) cable to negative (–) terminal on the dead battery because this can cause sparks.

6. Connect the red positive (+) cable to the remote positive (+) terminal location on the vehicle with the dead battery. Use a remote positive (+) terminal if the vehicle has one.

7. Don't let the other end touch metal. Connect it to the positive (+) terminal location of the vehicle with the good battery. Use a remote positive (+) terminal if the vehicle has one.

8. Now connect the negative (–) cable to the negative (–) terminal location of the vehicle with the good battery. Use a remote negative (–) terminal if the vehicle has one.

Don't let the other end of the cable touch anything until the next step. The other end of the negative (–) cable does not go to the dead battery. It goes to a heavy, unpainted metal engine part or to a remote negative (–) terminal on the vehicle with the dead battery.

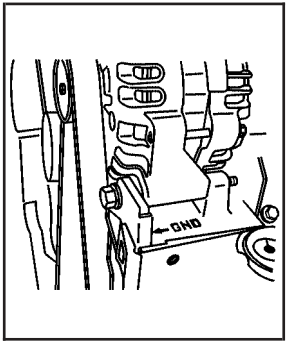

9. Connect the other end of the negative (–) cable to the remote negative (–) terminal, marked GND (–), on the vehicle with the dead battery.

10. Now start the vehicle with the good battery and run the engine for a while.
11. Try to start the vehicle with the dead battery. If it won't start after a few tries, it probably needs service.

Notice: **If the jumper cables are removed in the wrong order, electrical shorting may occur and damage the vehicle. The repairs would not be covered by your warranty. Remove the jumper cables in the correct order, making sure that the cables do not touch each other or other metal.**

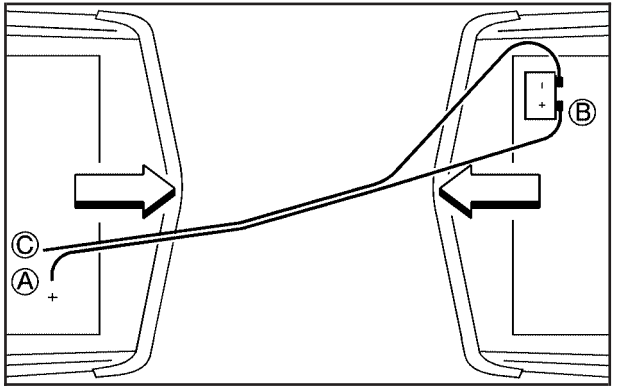

Jumper Cable Removal

A. Dead Battery or Remote Positive (+) Terminal

B. Good Battery or Remote Positive (+) and Remote Negative (–) Terminals

C. Heavy, Unpainted Metal Engine Part or Remote Negative (–) Terminal (GND)

To disconnect the jumper cables from both vehicles, do the following:

1. Disconnect the black negative (–) cable from the vehicle that had the dead battery.
2. Disconnect the black negative (–) cable from the vehicle with the good battery.
3. Disconnect the red positive (+) cable from the vehicle with the good battery.
4. Disconnect the red positive (+) cable from the other vehicle.
5. Return the remote positive (+) terminal cover to its original position.

Rear Axle

When to Check and Change Lubricant

It is not necessary to regularly check the rear axle fluid unless there is a leak in the system or you hear an unusual noise. A fluid loss in the system indicates that you have a problem. Have the system inspected and repaired.

How to Check Lubricant

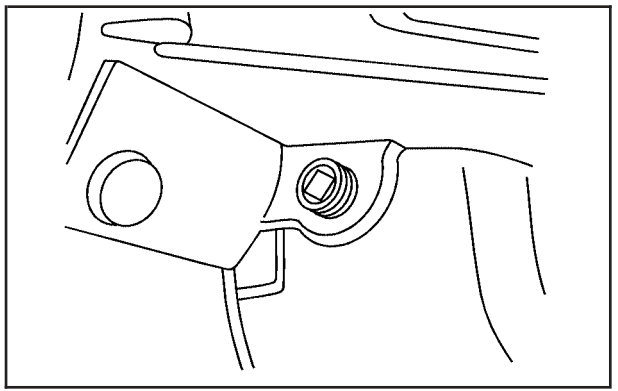

To get an accurate reading, the vehicle should be on a level surface.

The proper level is from 0 to 3/8 inch (0 to 10 mm) below the bottom of the filler plug hole.

If the level is below the bottom of the filler plug hole, you'll need to add some lubricant. Add enough lubricant to raise the level to the bottom of the filler plug hole.

What to Use

See *Recommended Fluids and Lubricants on page 6-13* for the type of fluid to use.

Headlamp Aiming

If your vehicle is damaged in an accident, the headlamp aim may be affected. If you believe your headlamps need to be re-aimed, we recommend that you take your vehicle to the dealer for service. However, it is possible for you to re-aim your headlamps by following the procedure in the service manual for your vehicle.

Bulb Replacement

See *Replacement Bulbs on page 5-48* for the proper types of bulbs to use. For any bulb changing procedure not listed in this section, contact your dealer's service department.

Halogen Bulbs

⚠ CAUTION:

Halogen bulbs have pressurized gas inside and can burst if you drop or scratch the bulb. You or others could be injured. Be sure to read and follow the instructions on the bulb package.

Headlamps

To replace the headlamp bulbs do the following:

1. Turn the front wheels as far as they will go in the opposite direction of the bulb that is being changed.
2. Reach underneath the vehicle and locate the headlamp door. Use a tool to remove the fastener retaining the door.

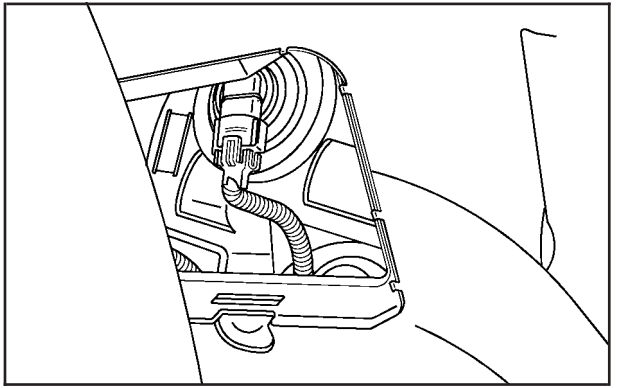

3. Turn the socket counterclockwise to remove it from the assembly.

   There are separate sockets for the high and low-beam headlamps.
4. Pull the socket out of the headlamp assembly.

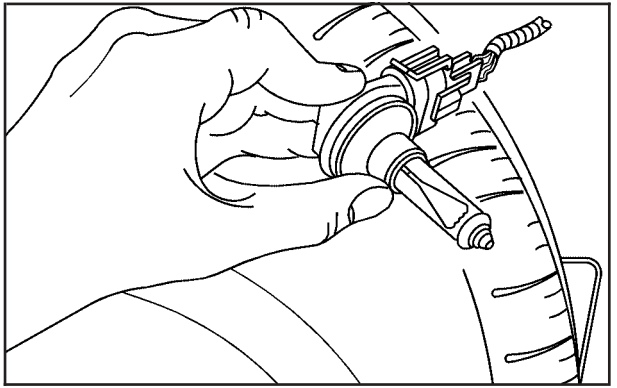

5. Separate the bulb assembly from the wiring harness and replace the unit.
6. Put the socket back into the headlamp assembly in the vehicle by turning it clockwise.
7. Reinstall the headlamp cover and tighten the fastener.

Front Turn Signal, Sidemarker and Parking Lamps

Front Turn and Parking Lamps

To change the front turn or parking lamps do the following:

1. Locate the bar that runs across the front of the vehicle and remove the two screws located near the front of the hood that hold the bar in place.
2. Release the tabs that attach the bar to the headlamps.

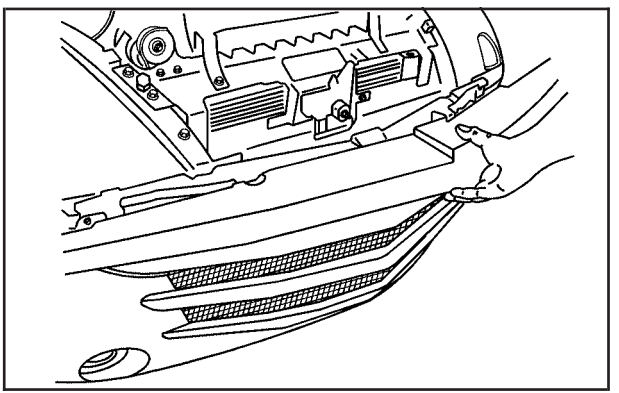

3. Pull outward on the bar to remove it from the vehicle.

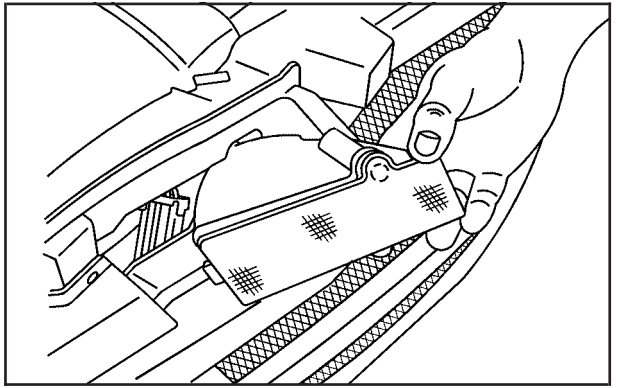

4. Locate and release the tabs behind the grille that hold the lamp assembly in place. Unsnap the tabs and push forward to remove the lamp assembly.
5. Turn the bulb socket counterclockwise to access the bulb.
6. Pull the old bulb out of the socket and push in a new bulb.
7. Reverse the steps to reinstall the lamp assembly.

Sidemarker Lamps

To replace the bulbs in the sidemarker lamps do the following:

1. Reach underneath the vehicle to locate and release the clips holding the lamp assembly in place.
2. Push the assembly forward.
3. Turn the bulb socket counterclockwise until you hear a click.

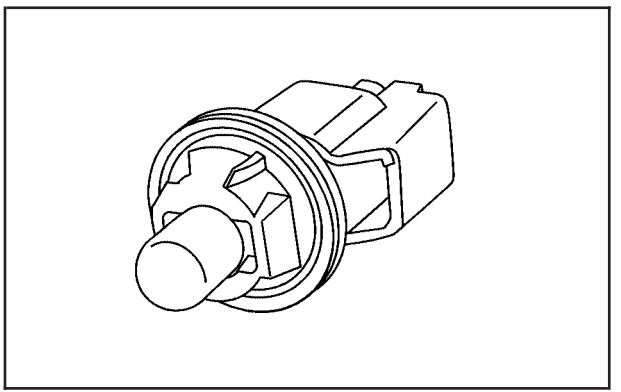

4. Pull the old bulb out of the socket and push in a new bulb.
5. Reverse steps to reinstall the lamp assembly.

Center High-Mounted Stoplamp (CHMSL)

It is recommended that this component be replaced as a unit. See your dealer.

Taillamps

To change the taillamp bulbs, do the following:

1. Reach underneath the rear of the vehicle.

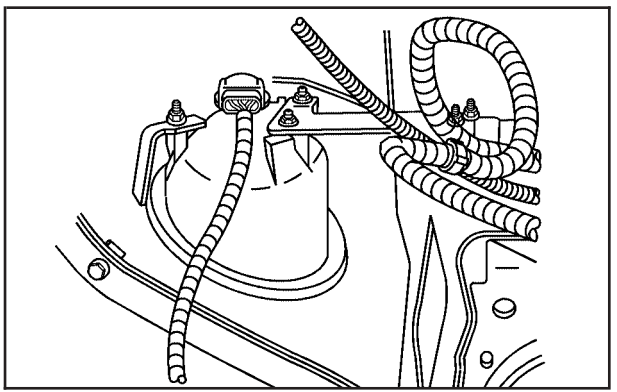

2. Find the bulb socket, twist counterclockwise, and remove it from the lamp assembly.

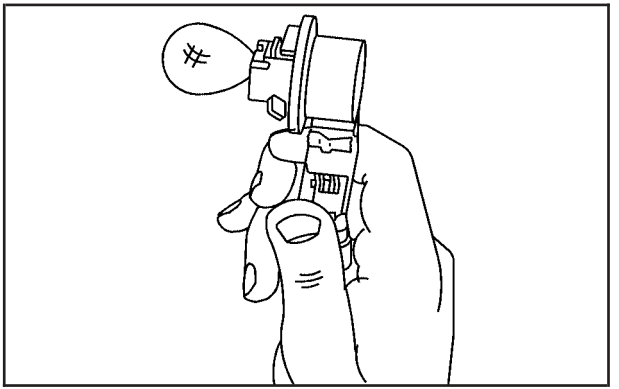

3. Pull the old bulb out of the socket and push in a new bulb.
4. Reinstall the socket into the lamp assembly and turn it clockwise to secure.

Back-Up Lamps

To replace the bulb in the back-up lamps, do the following:

1. Reach underneath the vehicle near the license plate and find the bulb socket.

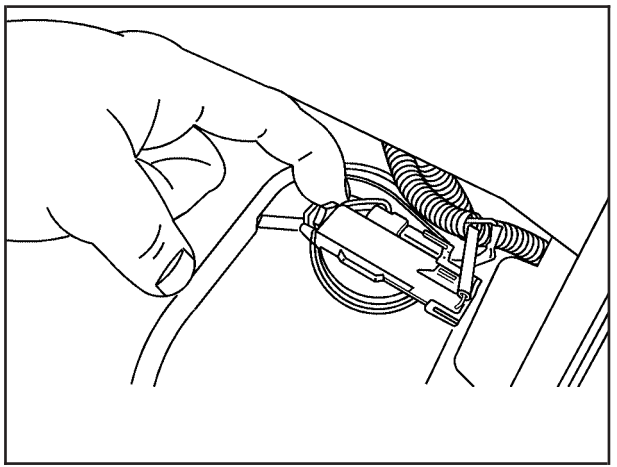

2. To remove the socket from the lamp assembly, locate and squeeze the release tab while turning the socket counterclockwise.
3. Turn the bulb counterclockwise and then pull outward to remove it from the socket.
4. Insert a new bulb into the socket and turn it clockwise to secure it.
5. Reverse the previous steps to reinstall the lamp assembly on the vehicle.

Replacement Bulbs

Exterior Lamp	Bulb Number
Back-Up Lamps	2057
High Beam Headlamp	9005HB3
Low Beam Headlamp	H11
Parking Lamps	T20
Sidemarker Lamps	194
Taillamps	3157
Turn Signal Lamps	T20
*For all other bulbs not listed here, contact your dealer.	

Windshield Wiper Blade Replacement

Windshield wiper blades should be inspected periodically for wear and cracking. See *Scheduled Maintenance on page 6-4*.

Replacement blades come in different types and are removed in different ways. For proper type and length, see *Normal Maintenance Replacement Parts on page 6-15*.

Notice: **Allowing the wiper blade arm to touch the windshield when no wiper blade is installed could damage the windshield. Any damage that occurs would not be covered by your warranty. Do not allow the wiper blade arm to touch the windshield.**

1. To remove the old wiper blades, lift the wiper arm until it locks into a vertical position.

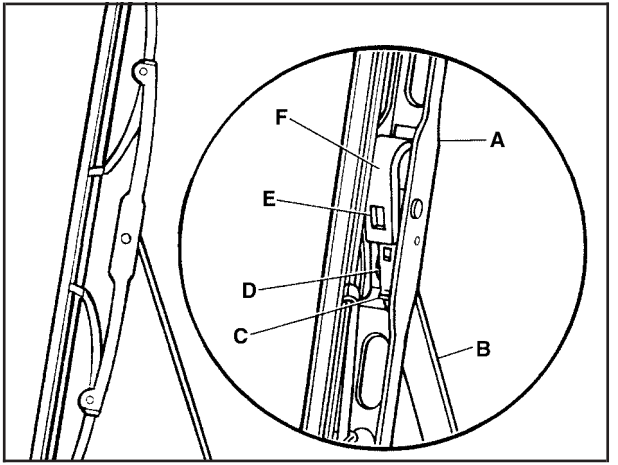

A. Blade Assembly
B. Arm Assembly
C. Locking Tab
D. Blade Pivot
E. Hook Slot
F. Arm Hook

2. Press down on the blade assembly pivot locking tab. Pull down on the blade assembly to release it from the wiper arm hook.

3. Remove the insert from the blade assembly. The insert has two notches at one end that are locked by bottom claws of the blade assembly. At the notched end, pull the insert from the blade assembly.

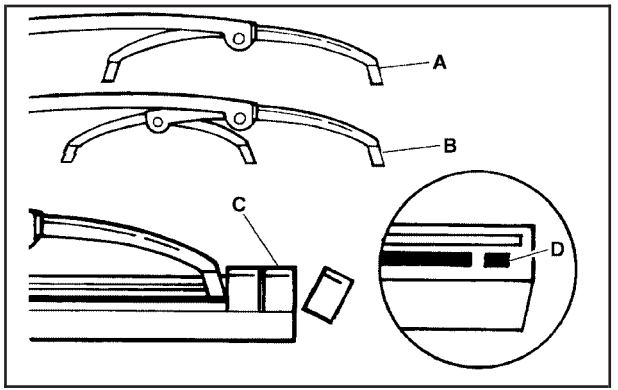

4. To install the new wiper insert, slide the insert (D), notched end last, into the end with two blade claws (A). Slide the insert all the way through the blade claws at the opposite end (B). The plastic caps (C) will be forced off as the insert is fully inserted.
5. Be sure that the notches are locked by the bottom claws. Make sure that all other claws are properly locked on both sides of the insert slots.

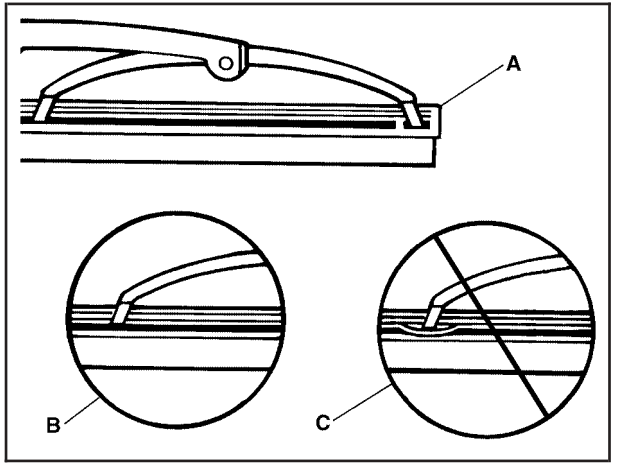

A. Claw in Notch
B. Correct Installation
C. Incorrect Installation

6. Put the blade assembly pivot in the wiper arm hook. Pull up until the pivot locking tab locks in the hook slot.
7. Carefully lower the wiper arm and blade assembly onto the windshield.

Tires

Your new vehicle comes with high-quality tires made by a leading tire manufacturer. If you ever have questions about your tire warranty and where to obtain service, see your GM Warranty booklet for details. For additional information refer to the tire manufacturer's booklet included with your vehicle's Owner's Manual.

⚠ CAUTION:

- **Poorly maintained and improperly used tires are dangerous.**
- **Overloading your tires can cause overheating as a result of too much friction. You could have an air-out and a serious accident. See *Loading Your Vehicle on page 4-32*.**

CAUTION: (Continued)

CAUTION: (Continued)

- **Underinflated tires pose the same danger as overloaded tires. The resulting accident could cause serious injury. Check all tires frequently to maintain the recommended pressure. Tire pressure should be checked when your tires are cold.**
- **Overinflated tires are more likely to be cut, punctured or broken by a sudden impact, such as when you hit a pothole. Keep tires at the recommended pressure.**
- **Worn, old tires can cause accidents. If your tread is badly worn, or if your tires have been damaged, replace them.**

See *Inflation - Tire Pressure on page 5-58* for inflation pressure adjustment for high speed driving.

Winter Tires

If you expect to drive on snow or ice covered roads often, you may want to get winter tires for your vehicle. All season tires provide good overall performance on most surfaces but they may not offer the traction you would like or the same level of performance as winter tires on snow or ice covered roads. If you choose to use winter tires:

- Use tires of the same brand and tread type on all four wheel positions.
- Use only radial ply tires of the same size as your original equipment tires.

See *Buying New Tires on page 5-60*.

Tire Sidewall Labeling

Useful information about a tire is molded into the sidewall. The following illustration is an example of a typical P-Metric tire sidewall.

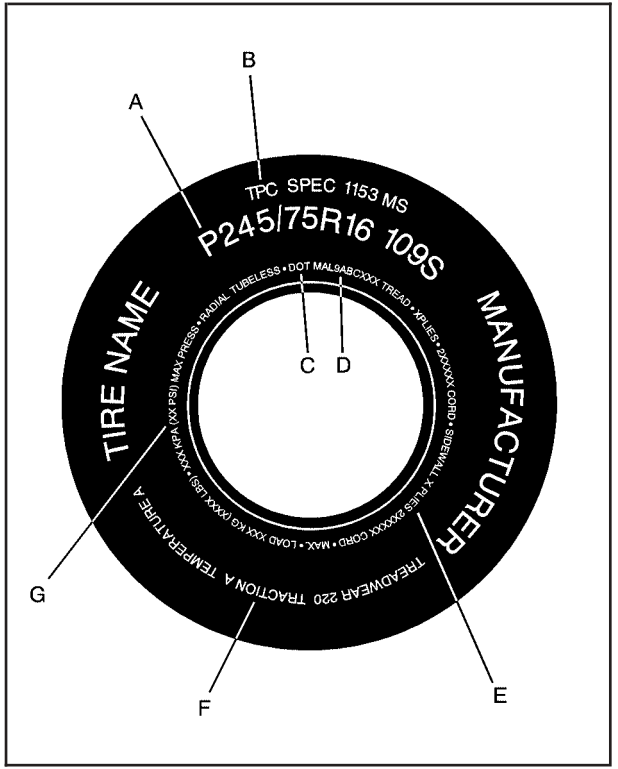

(A) Tire Size: The tire size code is a combination of letters and numbers used to define a particular tire's width, height, aspect ratio, construction type, and service description. See the Tire Size illustration later in this section for more detail.

(B) Tire Performance Criteria Specification (TPC Spec): Original equipment tires designed to GM's specific tire performance criteria have a TPC specification code molded onto the sidewall. GM's TPC specifications meet or exceed all federal safety guidelines.

(C) Department of Transportation (DOT): The Department of Transportation (DOT) code indicates that the tire is in compliance with the U.S. Department of Transportation Motor Vehicle Safety Standards.

(D) Tire Identification Number (TIN): The letters and numbers following the DOT code are the Tire Identification Number (TIN). The TIN shows the manufacturer and plant code, tire size, and date the tire was manufactured. The TIN is molded onto both sides of the tire, although only one side may have the date of manufacture.

(E) Tire Ply Material: The type of cord and number of plies in the sidewall and under the tread.

(F) Uniform Tire Quality Grading (UTQG): Tire manufacturers are required to grade tires based on three performance factors: treadwear, traction, and temperature resistance. For more information, see *Uniform Tire Quality Grading on page 5-61*.

(G) Maximum Cold Inflation Load Limit: Maximum load that can be carried and the maximum pressure needed to support that load. For information on recommended tire pressure see *Inflation - Tire Pressure on page 5-58* and *Loading Your Vehicle on page 4-32*.

Tire Size

The following illustration shows, an example of, a typical passenger car tire size.

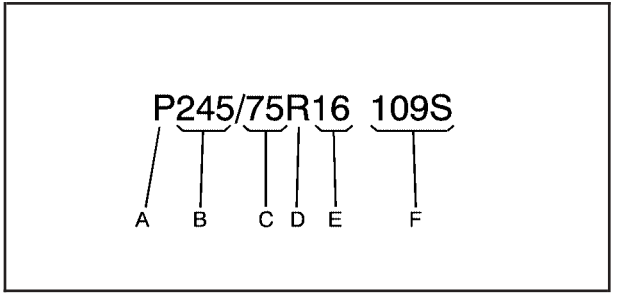

(A) Passenger (P-Metric) Tire: The United States version of a metric tire sizing system. The letter “P” as the first character in the tire size means a passenger vehicle tire engineered to standards set by the U.S. Tire and Rim Association.

(B) Tire Width: The three-digit number indicates the tire section width in millimeters from sidewall to sidewall.

(C) Aspect Ratio: A two-digit number that indicates the tire height-to-width measurements. For example, if the tire size aspect ratio is 75, as shown in item C, of the illustration, it would mean that the tire's sidewall is 75 percent as high as it is wide.

(D) Construction Code: A letter code is used to indicate the type of ply construction in the tire. The letter "R" means radial ply construction; the letter "D" means diagonal or bias ply construction; and the letter "B" means belted-bias ply construction.

(E) Rim Diameter: Diameter of the wheel in inches.

(F) Service Description: The service description indicates the load range and speed rating of a tire. The load index can range from 1 to 279. Speed ratings range from A to Z.

Tire Terminology and Definitions

Air Pressure: The amount of air inside the tire pressing outward on each square inch of the tire. Air pressure is expressed in pounds per square inch (psi) or kilopascal (kPa).

Accessory Weight: This means the combined weight of optional accessories. Some examples of optional accessories are, automatic transmission, power steering, power brakes, power windows, power seats, and air conditioning.

Aspect Ratio: The relationship of a tire's height to its width.

Belt: A rubber coated layer of cords that is located between the plies and the tread. Cords may be made from steel or other reinforcing materials.

Bead: The tire bead contains steel wires wrapped by steel cords that hold the tire onto the rim.

Bias Ply Tire: A pneumatic tire in which the plies are laid at alternate angles less than 90 degrees to the centerline of the tread.

Cold Inflation Pressure: The amount of air pressure in a tire, measured in pounds per square inch (psi) or kilopascals (kPa) before a tire has built up heat from driving. See *Inflation - Tire Pressure on page 5-58*.

Curb Weight: This means the weight of a motor vehicle with standard and optional equipment including the maximum capacity of fuel, oil and coolant, but without passengers and cargo.

DOT Markings: A code molded into the sidewall of a tire signifying that the tire is in compliance with the U.S. Department of Transportation motor vehicle safety standards. The DOT code includes the Tire Identification Number (TIN), an alphanumeric designator which can also identify the tire manufacturer, production plant, brand and date of production.

GVWR: Gross Vehicle Weight Rating, see *Loading Your Vehicle on page 4-32*.

GAWR FRT: Gross Axle Weight Rating for the front axle, see *Loading Your Vehicle on page 4-32*.

GAWR RR: Gross Axle Weight Rating for the rear axle, see *Loading Your Vehicle on page 4-32*.

Intended Outboard Sidewall: The side of an asymmetrical tire, that must always face outward when mounted on a vehicle.

Kilopascal (kPa): The metric unit for air pressure. There are 6.9 kilopascals (kPa) to one psi.

Light Truck (LT-Metric) Tire: A tire used on light duty trucks and some multipurpose passenger vehicles.

Load Index: An assigned number ranging from 1 to 279 that corresponds to the load carrying capacity of a tire.

Maximum Inflation Pressure: The maximum air pressure to which a cold tire may be inflated. The maximum air pressure is molded onto the sidewall.

Maximum Load Rating: The load rating for a tire at the maximum permissible inflation pressure for that tire.

Maximum Loaded Vehicle Weight: The sum of curb weight; accessory weight; vehicle capacity weight; and production options weight.

Normal Occupant Weight: The number of occupants a vehicle is designed to seat multiplied by 150 pounds (68 kg). See *Loading Your Vehicle on page 4-32*.

Occupant Distribution: Designated seating positions.

Outward Facing Sidewall: The side of a asymmetrical tire that has a particular side that faces outward when mounted on a vehicle. The side of the tire that contains a whitewall, bears white lettering or bears manufacturer, brand, and or model name molding that is higher or deeper than the same moldings on the other sidewall of the tire.

Passenger (P-Metric) Tire: A tire used on passenger cars and some light duty trucks and multipurpose vehicles.

Recommended Inflation Pressure: Vehicle manufacturer's recommended tire inflation pressure and shown on the tire placard. See *Inflation - Tire Pressure on page 5-58* and *Loading Your Vehicle on page 4-32*.

Radial Ply tire: A pneumatic tire in which the ply cords that extend to the beads are laid at 90 degrees to the centerline of the tread.

Rim: A metal support for a tire and upon which the tire beads are seated.

Sidewall: The portion of a tire between the tread and the bead.

Speed Rating: An alphanumeric code assigned to a tire indicating the maximum speed at which a tire can operate.

Traction: The friction between the tire and the road surface. The amount of grip provided.

Tread: The portion of a tire that comes into contact with the road.

Treadwear Indicators: Narrow bands, sometimes called wear bars, that show across the tread of a tire when only 2/32 inch of tread remains. See *When It Is Time for New Tires on page 5-60*.

UTQGS: Uniform Tire Quality Grading Standards, a tire information system that provides consumers with ratings for a tire's traction, temperature, and treadwear. Ratings are determined by tire manufacturers using government testing procedures. The ratings are molded into the sidewall of the tire. See *Uniform Tire Quality Grading on page 5-61*.

Vehicle Capacity Weight: The number of designated seating positions multiplied by 150 pounds (68 kg) plus the rated cargo load. See *Loading Your Vehicle on page 4-32*.

Vehicle Maximum Load on the Tire: Load on an individual tire due to curb weight, accessory weight, occupant weight and cargo weight.

Vehicle Placard: A label permanently attached to a vehicle showing the original equipment tire size and recommended inflation pressure. See *Loading Your Vehicle on page 4-32*.

Inflation - Tire Pressure

The Certification/Tire label or the Tire and Loading Information label shows the correct inflation pressures for your tires when they're cold. "Cold" means your vehicle has been sitting for at least three hours or driven no more than 1 mile (1.6 km). See *Loading Your Vehicle on page 4-32*, for examples of these labels and where they are located on your vehicle. If you'll be driving at high speeds (speeds of 100 mph (160 km/h) or higher), where it is legal, set the cold inflation pressure to the maximum inflation pressure shown on the tire sidewall, or to 35 psi (244 kPa), whichever is lower. See the example below. When you end this high-speed driving, return to the cold inflation pressure shown on the Certification/Tire label or the Tire and Loading Information Label.

Example:

You'll find maximum load and inflation pressure molded on the tire's sidewall, in small letters near the rim flange. It will read something like this: Maximum load 690 kg (1521 lbs) 300 kPa (44 psi) Max. Press.

For this example, you would set the inflation pressure for high-speed driving at 35 psi (244 kPa) for the front and rear tires.

Notice: **Don't let anyone tell you that underinflation or overinflation is all right. It's not. If your tires don't have enough air (underinflation), you can get the following:**

- **Too much flexing**
- **Too much heat**
- **Tire overloading**
- **Bad wear**
- **Bad handling**
- **Bad fuel economy**

If your tires have too much air (overinflation), you can get the following:

- **Unusual wear**
- **Bad handling**
- **Rough ride**
- **Needless damage from road hazards**

When to Check

Check your tires once a month or more.

How to Check

Use a good quality pocket-type gage to check tire pressure. You can't tell if your tires are properly inflated simply by looking at them. Radial tires may look properly inflated even when they're underinflated. Check the tire's inflation pressure when the tires are cold. Cold means your vehicle has been sitting for at least three hours or driven no more than 1 mile (1.6 km).

Remove the valve cap from the tire valve stem. Press the tire gage firmly onto the valve to get a pressure measurement. If the cold tire inflation pressure matches the recommended pressure on the Certification/Tire label or the Tire and Loading Information label, no further adjustment is necessary. If the inflation pressure is low, add air until you reach the recommended amount.

If you overfill the tire, release air by pushing on the metal stem in the center of the tire valve. Recheck the tire pressure with the tire gage.

Be sure to put the valve caps back on the valve stems. They help prevent leaks by keeping out dirt and moisture.

Tire Inspection and Rotation

The tires on your vehicle are different sizes front to rear. Due to this, your tires should not be rotated. Each tire and wheel should be used only in the position it is in.

Check your tires and wheels regularly for unusual wear and damage. Also see, *Scheduled Maintenance on page 6-4*, *When It Is Time for New Tires on page 5-60* and *Wheel Replacement on page 5-63*.

When It Is Time for New Tires

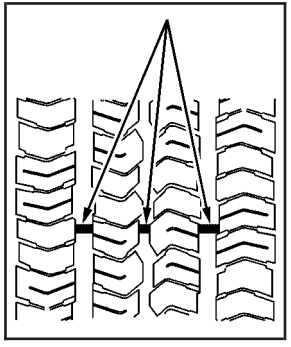

One way to tell when it's time for new tires is to check the treadwear indicators, which will appear when your tires have only 1/16 inch (1.6 mm) or less of tread remaining. Some commercial truck tires may not have treadwear indicators.

You need a new tire if any of the following statements are true:

- You can see the indicators at three or more places around the tire.
- You can see cord or fabric showing through the tire's rubber.
- The tread or sidewall is cracked, cut or snagged deep enough to show cord or fabric.
- The tire has a bump, bulge or split.
- The tire has a puncture, cut or other damage that can't be repaired well because of the size or location of the damage.

Buying New Tires

To find out what kind and size of tires your vehicle needs, look at the Certification/Tire label or the Tire and Loading Information label. See *Loading Your Vehicle on page 4-32*, for examples of these labels and where they are located on your vehicle.

The tires installed on your vehicle when it was new had a Tire Performance Criteria Specification (TPC Spec) number on each tire's sidewall. When you get new tires, GM recommends that you get tires with that same TPC Spec number. That way your vehicle will continue to have tires that are designed to give proper endurance, handling, load range, speed rating, traction, ride, tire pressure monitoring system performance and other things during normal service on your vehicle. If your tires have an all-season tread design, the TPC number will be followed by an "MS" (for mud and snow).

If you ever replace your tires with those not having a TPC Spec number, make sure they are the same size, load range, speed rating and construction type (bias, bias-belted or radial) as your original tires.

⚠ CAUTION:

Mixing tires could cause you to lose control while driving. If you mix tires of different sizes (other than those originally installed on your vehicle) or types (radial and bias-belted tires), the vehicle may not handle properly, and you could have a crash. Using tires of different sizes (other than those originally installed on your vehicle) may also cause damage to your vehicle. Be sure to use the correct size and type tires on all four wheels.

⚠ CAUTION:

If you use bias-ply tires on your vehicle, the wheel rim flanges could develop cracks after many miles of driving. A tire and/or wheel could fail suddenly, causing a crash. Use only radial-ply tires with the wheels on your vehicle.

Uniform Tire Quality Grading

Quality grades can be found where applicable on the tire sidewall between tread shoulder and maximum section width. For example:

Treadwear 200 Traction AA Temperature A

The following information relates to the system developed by the United States National Highway Traffic Safety Administration, which grades tires by treadwear, traction and temperature performance. (This applies only to vehicles sold in the United States.) The grades are molded on the sidewalls of most passenger car tires. The Uniform Tire Quality Grading system does not apply to deep tread, winter-type

snow tires, space-saver or temporary use spare tires, tires with nominal rim diameters of 10 to 12 inches (25 to 30 cm), or to some limited-production tires.

While the tires available on General Motors passenger cars and light trucks may vary with respect to these grades, they must also conform to federal safety requirements and additional General Motors Tire Performance Criteria (TPC) standards.

Treadwear

The treadwear grade is a comparative rating based on the wear rate of the tire when tested under controlled conditions on a specified government test course. For example, a tire graded 150 would wear one and a half (1.5) times as well on the government course as a tire graded 100. The relative performance of tires depends upon the actual conditions of their use, however, and may depart significantly from the norm due to variations in driving habits, service practices and differences in road characteristics and climate.

Traction – AA, A, B, C

The traction grades, from highest to lowest, are AA, A, B, and C. Those grades represent the tire's ability to stop on wet pavement as measured under controlled conditions on specified government test surfaces of asphalt and concrete. A tire marked C may have poor traction performance. Warning: The traction grade assigned to this tire is based on straight-ahead braking traction tests, and does not include acceleration, cornering, hydroplaning, or peak traction characteristics.

Temperature – A, B, C

The temperature grades are A (the highest), B, and C, representing the tire's resistance to the generation of heat and its ability to dissipate heat when tested under controlled conditions on a specified indoor laboratory test wheel. Sustained high temperature can cause the material of the tire to degenerate and reduce tire life, and excessive temperature can lead to sudden tire failure. The grade C corresponds to a level of performance which all passenger car tires must meet under the Federal Motor Vehicle Safety Standard No. 109. Grades B and A represent higher levels of performance on the laboratory test wheel than the minimum required by law.

Warning: The temperature grade for this tire is established for a tire that is properly inflated and not overloaded. Excessive speed, underinflation, or excessive loading, either separately or in combination, can cause heat buildup and possible tire failure.

Wheel Alignment and Tire Balance

The wheels on your vehicle were aligned and balanced carefully at the factory to give you the longest tire life and best overall performance.

Scheduled wheel alignment and wheel balancing are not needed. However, if you notice unusual tire wear or your vehicle pulling one way or the other, the alignment may need to be reset. If you notice your vehicle vibrating when driving on a smooth road, your wheels may need to be rebalanced.

Wheel Replacement

Replace any wheel that is bent, cracked, or badly rusted or corroded. If wheel nuts keep coming loose, the wheel, wheel bolts and wheel nuts should be replaced. If the wheel leaks air, replace it (except some aluminum wheels, which can sometimes be repaired). See your dealer if any of these conditions exist.

Your dealer will know the kind of wheel you need.

Each new wheel should have the same load-carrying capacity, diameter, width, offset and be mounted the same way as the one it replaces.

If you need to replace any of your wheels, wheel bolts or wheel nuts, replace them only with new GM original equipment parts. This way, you will be sure to have the right wheel, wheel bolts and wheel nuts for your vehicle.

⚠ CAUTION:

Using the wrong replacement wheels, wheel bolts or wheel nuts on your vehicle can be dangerous. It could affect the braking and handling of your vehicle, make your tires lose air and make you lose control. You could have a collision in which you or others could be injured. Always use the correct wheel, wheel bolts and wheel nuts for replacement.

Notice: **The wrong wheel can also cause problems with bearing life, brake cooling, speedometer or odometer calibration, headlamp aim, bumper height, vehicle ground clearance and tire clearance to the body and chassis.**

⚠ CAUTION:

Rust or dirt on a wheel, or on the parts to which it is fastened, can make wheel nuts become loose after a time. The wheel could come off and cause a crash. When you change a wheel, remove any rust or dirt from places where the wheel attaches to the vehicle. In an emergency, you can use a cloth or a paper towel to do this; but be sure to use a scraper or wire brush later, if you need to, to get all the rust or dirt off.

⚠ CAUTION:

Never use oil or grease on studs or the threads of the wheel nuts. If you do, the wheel nuts might come loose and the wheel could fall off, causing a crash.

⚠ CAUTION:

Incorrect wheel nuts or improperly tightened wheel nuts can cause the wheel to become loose and even come off. This could lead to a crash. Be sure to use the correct wheel nuts. If you have to replace them, be sure to get new GM original equipment wheel nuts.

Notice: **Improperly tightened wheel nuts can lead to brake pulsation and rotor damage. To avoid expensive brake repairs, evenly tighten the wheel nuts in the proper sequence and to the proper torque specification.**

Used Replacement Wheels

⚠ CAUTION:

Putting a used wheel on your vehicle is dangerous. You can't know how it's been used or how far it's been driven. It could fail suddenly and cause a crash. If you have to replace a wheel, use a new GM original equipment wheel.

Tire Chains

⚠ CAUTION:

Don't use tire chains. There's not enough clearance. Tire chains used on a vehicle without the proper amount of clearance can cause damage to the brakes, suspension or other vehicle parts. The area damaged by the tire chains could cause you to lose control of your vehicle and you or others may be injured in a crash. Use another type of traction device only if its manufacturer recommends it for use on your vehicle and tire size combination and road conditions. Follow that manufacturer's instructions. To help avoid damage to your vehicle, drive slowly, readjust or remove the device if it's contacting your vehicle, and don't spin your wheels. If you do find traction devices that will fit, install them on the rear tires.

If a Tire Goes Flat

Your vehicle has no spare tire, no tire changing equipment and no place to store a tire.

It's unusual for a tire to "blow out" while you're driving, especially if you maintain your tires properly. See *Tires on page 5-51*. If air goes out of a tire, it's much more likely to leak out slowly. But if you should ever have a "blow out" here are a few tips about what to expect and what to do:

If a front tire fails, the flat tire will create a drag that pulls the vehicle toward that side. Take your foot off the accelerator pedal and grip the steering wheel firmly. Steer to maintain lane position, and then gently brake to a stop well out of the traffic lane.

A rear blow out, particularly on a curve, acts much like a skid and may require the same correction you'd use in a skid. In any rear blow out, remove your foot from the accelerator pedal. Get the vehicle under control by steering the way you want the vehicle to go. It may be very bumpy and noisy, but you can still steer. Gently brake to a stop, well off the road if possible.

If a tire goes flat, avoid further tire and wheel damage by driving slowly to a level place and stopping. Then do this:

1. Turn on the hazard warning flashers.
2. Set the parking brake firmly.
3. Put the shift lever in PARK (P).
4. Turn off the engine.
5. Inspect the flat tire.

If the tire has been separated from the wheel or has damaged sidewalls or large tears that allow rapid air loss, call a tire repair facility. See *Roadside Assistance Program on page 7-6*.

If the flat tire is due to a slow leak caused by a nail or other similar road hazard, the tire inflator kit may be used to repair the damaged tire temporarily. The kit uses a liquid tire sealant to seal small punctures in the tread area of the tire. The flat tire is then inflated to at least 26 psi (179 kPa) and driven to evenly distribute the tire sealant. The tire pressure is checked after driving for a maximum of 10 minutes to see if the slow leak has been stopped. If the tire pressure is 19 psi (131 kPa) or more, inflate the tire up to the standard operating pressure as shown on the tire and loading information label found on center pillar near the door latch or on the rear edge of the driver's door. See *Inflation - Tire Pressure on page 5-58*.

You should have the damaged tire repaired as soon as possible. The tire sealant is a temporary repair only. For more information regarding the tire inflator kit see *Tire Inflator Kit on page 5-66*.

Notice: **If the tire pressure has dropped below 19 psi (131 kPa), the vehicle should not be driven. Damage to the tire may be severe and the sealant will not be effective. Contact Roadside Assistance, see *Roadside Assistance Program on page 7-6*.**

Tire Inflator Kit

Your vehicle is equipped with a tire inflator kit. It is located behind the driver's seat of your vehicle. Use the following directions for use of your tire inflator kit instead of directions you may find on or near the kit.

The repair kit contains the following:

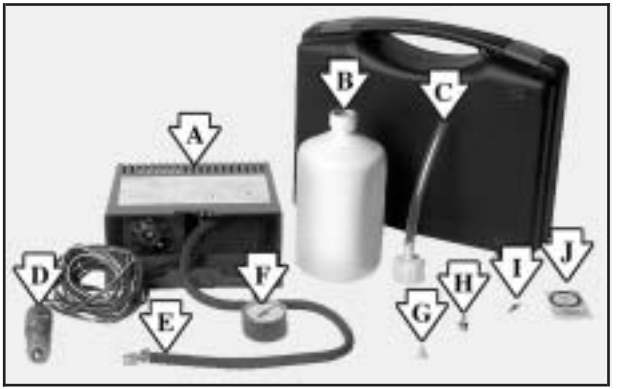

A. Air Compressor
B. Tire Sealant
C. Sealant Filling Hose
D. Air Compressor Accessory Plug
E. Air Compressor Inflator Hose
F. Air Pressure Gage
G. Sealant Filling Hose Plug
H. Valve Core Remover
I. Spare Valve Core
J. 55 mph (90 km/h) Label

Accessing the Tire Inflator Kit

To access the tire inflator kit for use, do the following:

1. Loosen the two nuts holding the tire inflator kit cover in place.

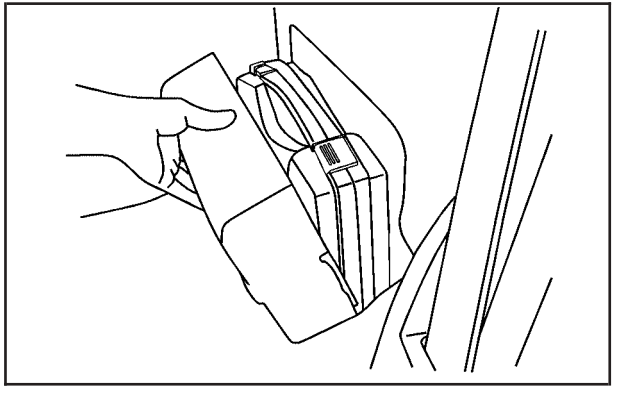

2. Remove the cover.
3. Grasp the handle and pull the tire inflator kit out.
4. Open the tire inflator kit case by lifting up the two tabs located on either side of the kit handle.

Tire Sealant

The kit contains a liquid sealant that when injected into a flat tire, may temporarily repair nail holes or cuts in the tread area of the tire. The tire sealant cannot repair tire damage caused while driving on a flat tire or a tire that has had a “blow out” or a tire that has punctures in the sidewall areas. The tire sealant solution is a one-time use application for one tire only. Check the tire sealant expiration date; the sealant may not be as effective beyond the expiration date. The tire sealant can be peeled off easily after drying.

Using Tire Sealant

Before using the tire sealant, be sure the valve stem area is clean and free of debris, such as mud, snow, ice, brake dust, etc. The valve stem should be located at the bottom of the tire before applying the tire sealant.

To apply the tire sealant, do the following:

1. Turn the valve cap on the tire valve counterclockwise to remove it.
2. Remove the valve core using the valve core tool provided in the tire inflator kit. An extra valve core is also provided in the kit.
3. Shake the bottle to make sure the sealant is well mixed.
4. Attach the tire sealant filling hose to the bottle of tire sealant to pierce the seal on the bottle.
5. Remove the sealing plug from the end of the filling hose and insert the end of the hose over the tire valve.
6. Hold the bottle upside down over the tire valve and squeeze the sealant into the tire until the bottle is empty.
7. Remove the sealant filling hose from the tire valve and reinstall the sealing plug.
8. Insert the valve core back into the tire valve. Turn valve core tool clockwise to secure the valve core.

Once the tire sealant is applied, you can use the compressor to inflate the tire.

Air Compressor

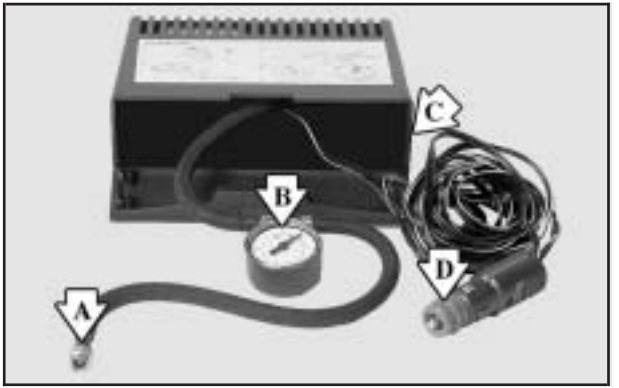

A. Inflating Hose
B. Air Pressure Gage
C. ON/OFF Switch
D. Air Compressor Plug

The air compressor included in the tire inflator kit was designed exclusively for your vehicle. After the sealant has been injected into the flat tire, use the air compressor to inflate the flat tire. Follow these instructions:

1. Put the transmission in PARK (P) and apply the parking brake. See *Shifting Into Park (P) on page 2-19* and *Parking Brake on page 2-18*.

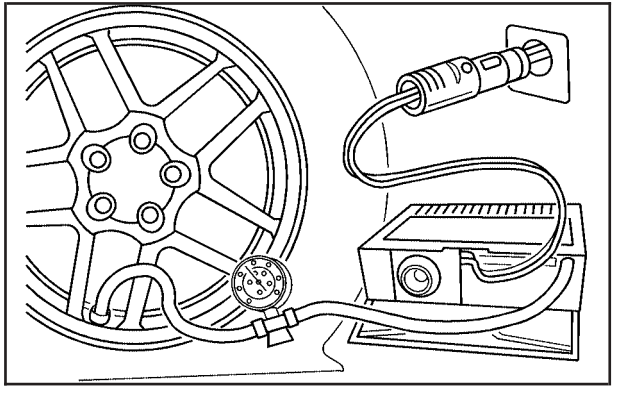

2. Attach the nozzle on the compressor to the valve stem of the flat tire, and then insert the plug into an accessory power outlet on your vehicle.

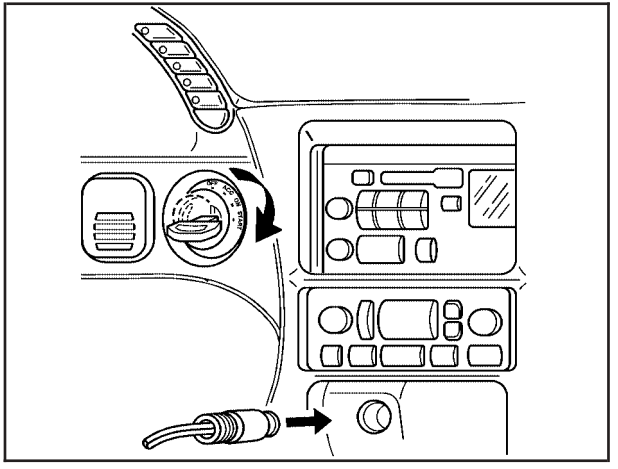

⚠ CAUTION:

Idling the engine in a closed-in place or with the climate control system off can cause deadly carbon monoxide (CO). See “Engine Exhaust” in the Index.

Notice: **The car engine must be running to avoid draining the battery while running the air compressor.**

3. Start your vehicle.
4. Turn the compressor on to inflate the tire.

⚠ CAUTION:

Inflating something too much can make it explode, and you or others could be injured. Be sure to read the inflator instructions, and inflate the tire to its recommended pressure. Do not exceed 36 psi (248 kPa).

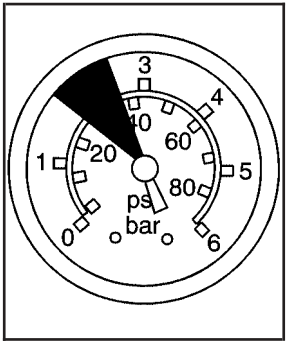

5. Inflate the tire to at least 26 psi (179 kPa), but not more than 36 psi (248 kPa).

Notice: **If the air compressor runs for more than six minutes, at a time, it may overheat. The excessive heat could damage the compressor. Always operate the compressor for six minutes or less when inflating a tire.**

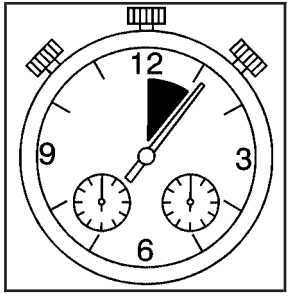

6. Inflate the tire for up to a maximum of six minutes.

Notice: **If 26 psi (179 kPa) tire pressure cannot be reached after six minutes the vehicle should not be driven further. Damage to the tire is severe and the sealant will not be effective. Remove the air compressor plug from the accessory power outlet and unscrew the inflating hose from the tire valve. See "Roadside Assistance" in the Index.**

7. If 26 psi (179 kPa) tire pressure is reached in six minutes or less, disconnect the air compressor.

8. Attach the enclosed maximum speed label to the inside upper left corner of the windshield or to the face of the radio/clock.

The maximum speed label reminds you to drive cautiously and not to exceed 55 mph (90 km/h) until you have the damaged tire inspected and repaired.

9. Drive the vehicle immediately to distribute the tire sealant evenly inside the tire.
10. After driving for 10 minutes, recheck the tire pressure. If the tire pressure is 19 psi (131 kPa) or more, inflate the tire to the standard operating pressure as shown on the Certification/Tire label located on the edge of the driver's door.

    If the tire pressure has dropped below 19 psi (131 kPa), do not continue to drive the vehicle. The tire is severely damaged and the tire sealant will not be effective. Repair or replace the tire as soon as possible.

Tire Inflator Kit Storage

The tire inflator kit is stored behind the driver's seat in your vehicle. To reinstall the kit after use, do the following:

⚠ CAUTION:

Storing the tire inflator kit or other equipment in the passenger compartment of the vehicle could cause injury. In a sudden stop or collision, loose equipment could strike someone. Store the tire inflator kit in the proper place.

1. Place the air compressor pump and accessories into the inflator kit case.
2. Move the driver's seat forward and tilt the seatback forward out of the way.
3. Place the cover over the tire inflator kit.
4. Hold the kit with the cover on against the back wall of the passenger compartment in the designated storage area as you perform the next step.
5. Reinstall the two nuts holding the tire inflator kit cover in place.

Appearance Care

Remember, cleaning products can be hazardous. Some are toxic. Others can burst into flames if you strike a match or get them on a hot part of the vehicle. Some are dangerous if you breathe their fumes in a closed space. When you use anything from a container to clean your vehicle, be sure to follow the manufacturer's warnings and instructions. And always open your doors or windows when you are cleaning the inside.

Never use these to clean your vehicle:

- Gasoline
- Benzene
- Naphtha
- Carbon Tetrachloride
- Acetone
- Paint Thinner
- Turpentine
- Lacquer Thinner
- Nail Polish Remover

They can all be hazardous — some more than others — and they can all damage your vehicle, too.

Do not use any of these unless this manual says you can. In many uses, these will damage your vehicle:

- Alcohol
- Laundry Soap
- Bleach
- Reducing Agents

Cleaning the Inside of Your Vehicle

Use a vacuum cleaner often to get rid of dust and loose dirt. Wipe vinyl, leather, plastic and painted surfaces with a clean, damp cloth.

Cleaning Fabric/Carpet

Your dealer has cleaners for the cleaning of fabric and carpet. They will clean normal spots and stains very well. You can get GM approved cleaning products from your dealer. See *Vehicle Care/Appearance Materials on page 5-81*.

Here are some cleaning tips:

- Always read the instructions on the cleaner label.
- Clean up stains as soon as you can — before they set.
- Carefully scrape off any excess stain.
- Use a clean cloth or sponge, and change to a clean area often. A soft brush may be used if stains are stubborn.
- If a ring forms on fabric after spot cleaning, clean the entire area immediately or it will set.

Using Cleaner on Fabric

1. Vacuum and brush the area to remove any loose dirt.
2. Always clean a whole trim panel or section. Mask surrounding trim along stitch or welt lines.
3. Follow the directions on the container label.
4. Apply cleaner with a clean sponge. Don't saturate the material and don't rub it roughly.
5. As soon as you've cleaned the section, use a sponge to remove any excess cleaner.
6. Wipe cleaned area with a clean, water-dampened towel or cloth.
7. Wipe with a clean cloth and let dry.

Special Fabric Cleaning Problems

Stains caused by such things as catsup, coffee (black), egg, fruit, fruit juice, milk, soft drinks, vomit, urine and blood can be removed as follows:

1. Carefully scrape off excess stain, then sponge the soiled area with cool water.
2. If a stain remains, follow the cleaner instructions described earlier.
3. If an odor lingers after cleaning vomit or urine, treat the area with a water/baking soda solution: 1 teaspoon (5 ml) of baking sold to 1 cup (250 ml) of lukewarm water.
4. Let dry.

Stains caused by candy, ice cream, mayonnaise, chili sauce and unknown stains can be removed as follows:

1. Carefully scrape off excess stain.
2. First, clean with cool water and allow to dry completely.
3. If a stain remains, follow the cleaner instructions described earlier.

Cleaning Vinyl

Use warm water and a clean cloth.

- Rub with a clean, damp cloth to remove dirt. You may have to do this more than once.
- Things like tar, asphalt and shoe polish will stain if you don't get them off quickly. Use a clean cloth and vinyl cleaner. See your dealer for this product.

Cleaning Leather

Use a soft cloth with lukewarm water and a mild soap or saddle soap and wipe dry with a soft cloth. Then, let the leather dry naturally. Do not use heat to dry.

- For stubborn stains, use a leather cleaner.
- *Never* use oils, varnishes, solvent-based or abrasive cleaners, furniture polish or shoe polish on leather.
- Soiled or stained leather should be cleaned immediately. If dirt is allowed to work into the finish, it can harm the leather.

Cleaning the Top of the Instrument Panel

Use only mild soap and water to clean the top surfaces of the instrument panel. Sprays containing silicones or waxes may cause annoying reflections in the windshield and even make it difficult to see through the windshield under certain conditions.

Cleaning Interior Plastic Components

Use only a mild soap and water solution on a soft cloth or sponge. Commercial cleaners may affect the surface finish.

Cleaning Glass Surfaces

Glass should be cleaned often. GM Glass Cleaner or a liquid household glass cleaner will remove normal tobacco smoke and dust films on interior glass. See *Vehicle Care/Appearance Materials on page 5-81*.

Notice: **If you use abrasive cleaners when cleaning glass surfaces on your vehicle, you could scratch the glass and/or cause damage to the rear window defogger and the integrated radio antenna. When cleaning the glass on your vehicle, use only a soft cloth and glass cleaner.**

Care of Safety Belts

Keep belts clean and dry.

⚠ CAUTION:

Do not bleach or dye safety belts. If you do, it may severely weaken them. In a crash, they might not be able to provide adequate protection. Clean safety belts only with mild soap and lukewarm water.

Weatherstrips

Silicone grease on weatherstrips will make them last longer, seal better, and not stick or squeak. Apply silicone grease with a clean cloth at least every six months. During very cold, damp weather more frequent application may be required. See *Recommended Fluids and Lubricants on page 6-13*.

Cleaning the Outside of Your Vehicle

The paint finish on your vehicle provides beauty, depth of color, gloss retention and durability.

Washing Your Vehicle

The best way to preserve your vehicle's finish is to keep it clean by washing it often with lukewarm or cold water.

Do not wash your vehicle in the direct rays of the sun. Use a car washing soap. Do not use strong soaps or chemical detergents. Be sure to rinse the vehicle well, removing all soap residue completely. You can get GM-approved cleaning products from your dealer. See *Vehicle Care/Appearance Materials on page 5-81*.
Do not use cleaning agents that are petroleum based, or that contain acid or abrasives. All cleaning agents should be flushed promptly and not allowed to dry on the surface, or they could stain. Dry the finish with a soft, clean chamois or an all-cotton towel to avoid surface scratches and water spotting.

High pressure car washes may cause water to enter your vehicle.

Notice: **If you drive your vehicle through an automatic car wash that does not have enough clearance for the wide rear tires and wheels, you could damage your vehicle. Verify with the manager of the car wash that your vehicle will fit before entering the car wash or use a touchless car wash.**

Cleaning Exterior Lamps/Lenses

Use only lukewarm or cold water, a soft cloth and a car washing soap to clean exterior lamps and lenses. Follow instructions under “Washing Your Vehicle.”

Finish Care

Occasional waxing or mild polishing of your vehicle by hand may be necessary to remove residue from the paint finish. You can get GM-approved cleaning products from your dealer. See *Vehicle Care/Appearance Materials on page 5-81*.

Your vehicle has a “basecoat/clearcoat” paint finish. The clearcoat gives more depth and gloss to the colored basecoat. Always use waxes and polishes that are non-abrasive and made for a basecoat/clearcoat paint finish.

Notice: **Machine compounding or aggressive polishing on a basecoat/clearcoat paint finish may damage it. Use only non-abrasive waxes and polishes that are made for a basecoat/clearcoat paint finish on your vehicle.**

Foreign materials such as calcium chloride and other salts, ice melting agents, road oil and tar, tree sap, bird droppings, chemicals from industrial chimneys, etc., can damage your vehicle’s finish if they remain on painted surfaces. Wash the vehicle as soon as possible. If necessary, use non-abrasive cleaners that are marked safe for painted surfaces to remove foreign matter.

Exterior painted surfaces are subject to aging, weather and chemical fallout that can take their toll over a period of years. You can help to keep the paint finish looking new by keeping your vehicle garaged or covered whenever possible.

Protecting Exterior Bright Metal Parts

Bright metal parts should be cleaned regularly to keep their luster. Washing with water is all that is usually needed. However, you may use chrome polish on chrome or stainless steel trim, if necessary.

Use special care with aluminum trim. To avoid damaging protective trim, never use auto or chrome polish, steam or caustic soap to clean aluminum. A coating of wax, rubbed to high polish, is recommended for all bright metal parts.

Cleaning the Windshield and Wiper Blades

If the windshield is not clear after using the windshield washer, or if the wiper blade chatters when running, wax, sap or other material may be on the blade or windshield.

Clean the outside of the windshield with a full-strength glass cleaning liquid. The windshield is clean if beads do not form when you rinse it with water.

Grime from the windshield will stick to the wiper blades and affect their performance. Clean the blade by wiping vigorously with a cloth soaked in full-strength windshield washer solvent. Then rinse the blade with water.

Check the wiper blades and clean them as necessary; replace blades that look worn.

Cleaning Aluminum or Chrome-Plated Wheels

Your vehicle will have either aluminum or chrome-plated wheels.

Keep your wheels clean using a soft clean cloth with mild soap and water. Rinse with clean water. After rinsing thoroughly, dry with a soft clean towel. A wax may then be applied.

The surface of these wheels is similar to the painted surface of your vehicle. Do not use strong soaps, chemicals, abrasive polishes, abrasive cleaners, cleaners with acid, or abrasive cleaning brushes on them because you could damage the surface. Do not use chrome polish on aluminum wheels.

Do not take your vehicle through an automatic car wash that has silicone carbide tire cleaning brushes. These brushes can also damage the surface of these wheels.

Cleaning Tires

To clean your tires, use a stiff brush with tire cleaner.

Notice: **Using petroleum-based tire dressing products on your vehicle may damage the paint finish and/or tires. When applying a tire dressing, always wipe off any overspray from all painted surfaces on your vehicle.**

Sheet Metal Damage

If your vehicle is damaged and requires sheet metal repair or replacement, make sure the body repair shop applies anti-corrosion material to parts repaired or replaced to restore corrosion protection.

Original manufacturer replacement parts will provide the corrosion protection while maintaining the warranty.

Finish Damage

Any stone chips, fractures or deep scratches in the finish should be repaired right away. Bare metal will corrode quickly and may develop into major repair expense.

Minor chips and scratches can be repaired with touch-up materials avaliable from your dealer. Larger areas of finish damage can be corrected in your dealer's body and paint shop.

Underbody Maintenance

Chemicals used for ice and snow removal and dust control can collect on the underbody. If these are not removed, corrosion and rust can develop on the underbody parts such as fuel lines, frame, floor pan and exhaust system even though they have corrosion protection.

At least every spring, flush these materials from the underbody with plain water. Clean any areas where mud and debris can collect. Dirt packed in close areas of the frame should be loosened before being flushed. Your dealer or an underbody car washing system can do this for you.

Chemical Paint Spotting

Some weather and atmospheric conditions can create a chemical fallout. Airborne pollutants can fall upon and attack painted surfaces on your vehicle. This damage can take two forms: blotchy, ring-shaped discolorations, and small, irregular dark spots etched into the paint surface.

Although no defect in the paint job causes this, GM will repair, at no charge to the owner, the surfaces of new vehicles damaged by this fallout condition within 12 months or 12,000 miles (20 000 km) of purchase, whichever occurs first.

Vehicle Care/Appearance Materials

See your GM dealer for more information on purchasing the following products.

Description	Usage
Polishing Cloth Wax-Treated	Interior and exterior polishing cloth.
Tar and Road Oil Remover	Removes tar, road oil and asphalt.
Chrome Cleaner and Polish	Use on chrome or stainless steel.
White Sidewall Tire Cleaner	Removes soil and black marks from whitewalls.
Vinyl Cleaner	Cleans vinyl tops, upholstery and convertible tops.
Glass Cleaner	Removes dirt, grime, smoke and fingerprints.
Chrome and Wire Wheel Cleaner	Removes dirt and grime from chrome wheels and wire wheel covers.
Finish Enhancer	Removes dust, fingerprints, and surface contaminants. Spray on wipe off.
Swirl Remover Polish	Removes swirl marks, fine scratches and other light surface contamination.
Cleaner Wax	Removes light scratches and protects finish.
Foaming Tire Shine Low Gloss	Cleans, shines and protects in one easy step, no wiping necessary.
Wash Wax Concentrate	Medium foaming shampoo. Cleans and lightly waxes. Biodegradable and phosphate free.
Spot Lifter	Quickly and easily removes spots and stains from carpets, vinyl and cloth upholstery.
Odor Eliminator	Odorless spray odor eliminator used on fabrics, vinyl, leather and carpet.
See your General Motors parts department for these products. See *Recommended Fluids and Lubricants on page 6-13*.	

Vehicle Identification

Vehicle Identification Number (VIN)

This is the legal identifier for your vehicle. It appears on a plate in the front corner of the instrument panel, on the driver's side. You can see it if you look through the windshield from outside your vehicle. The VIN also appears on the Vehicle Certification and Service Parts labels and the certificates of title and registration.

Engine Identification

The 8th character in your VIN is the engine code. This code will help you identify your engine, specifications and replacement parts.

Service Parts Identification Label

You'll find this label on the inside of the glove box. It's very helpful if you ever need to order parts. On this label is:

- your VIN,
- the model designation,
- paint information and
- a list of all production options and special equipment.

Be sure that this label is not removed from the vehicle.

Electrical System

Add-On Electrical Equipment

Notice: **Don't add anything electrical to your vehicle unless you check with your dealer first. Some electrical equipment can damage your vehicle and the damage wouldn't be covered by your warranty. Some add-on electrical equipment can keep other components from working as they should.**

Your vehicle has an air bag system. Before attempting to add anything electrical to your vehicle, see *Servicing Your Air Bag-Equipped Vehicle on page 1-55*.

Headlamps

The headlamp wiring is protected by an internal circuit breaker. An electrical overload will cause the lamps to go on and off, or in some cases to remain off. If this happens, have your headlamp wiring checked right away.

Windshield Wiper Fuses

The windshield wiper motor is protected by a circuit breaker and a fuse. If the motor overheats due to heavy snow or ice, the wiper will stop until the motor cools. If the overload is caused by some electrical problem, be sure to get it fixed.

Power Windows and Other Power Options

Circuit breakers protect the power windows and other power accessories. When the current load is too heavy, the circuit breaker opens and closes, protecting the circuit until the problem is fixed or goes away.

Fuses and Circuit Breakers

The wiring circuits in your vehicle are protected from short circuits by a combination of fuses and circuit breakers. This greatly reduces the chance of fires caused by electrical problems.

Look at the silver-colored band inside the fuse. If the band is broken or melted, replace the fuse. Be sure you replace a bad fuse with a new one of the identical size and rating.

If you ever have a problem on the road and don't have a spare fuse, you can borrow one that has the same amperage. Just pick some feature of your vehicle that you can get along without — like the radio or cigarette lighter — and use its fuse, if it is the correct amperage. Replace it as soon as you can.

Center Console Fuse Block

The center console fuse block is located on the center console between the two seats.

To remove the fuse block cover and access the fuses, do the following:

1. Move the passenger's seat all the way forward and tilt the seatback forward. See *Power Seats on page 1-2* and *Seatback Latches on page 1-6* for more information.
2. Pull the handle on the fuse block cover toward you and then slide it to the side. You will then be able to remove the cover completely.
3. To reinstall the cover, slide it to the side until it is lined up with the access hole. Then, push on the fuse panel cover until it latches into place.

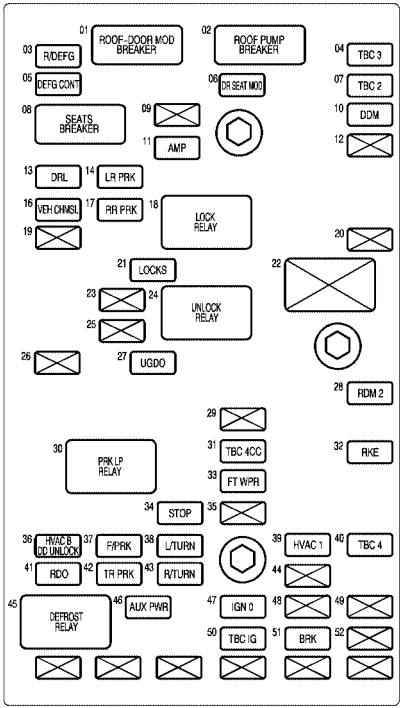

Fuses	Usage
03	Rear Window Defogger
04	Truck Body Controller
05	Rear Window Defogger
06	Driver Seat Module
07	Truck Body Controller
09	Blank
10	Driver’s Door Module, Power Mirrors
11	Amplifier
12	Blank
13	Daytime Running Lamps (DRL)
14	Driver’s Side Rear Parking Lamp
16	Center High-Mounted Stop Lamp
17	Passenger’s Side Rear Parking Lamp
19	Blank
20	Blank
21	Locks
22	Blank
23	Blank
25	Blank
26	Blank
27	HomeLink® System

Fuses	Usage
28	Roof Door Module
29	Blank
31	Truck Body Controller
32	Remote Keyless Entry (RKE)
33	Windshield Wipers
34	Stoplamps
35	Blank
36	Climate Control System, Driver's Door Unlock
37	Front Parking Lamps
38	Driver's Side Turn Signal
39	Climate Control System
40	Truck Body Controller
41	Radio
42	Trailer Parking Lamps
43	Passenger's Side Turn Signal
44	Blank
46	Accessory Power Outlets
47	Ignition
48	Blank

Fuses	Usage
49	Blank
50	Truck Body Controller, Ignition
51	Brakes
52	Blank

Relays	Usage
18	Locks
24	Unlock
30	Parking Lamps
45	Rear Window Defogger, Outside Power Heated Mirrors

Circuit Breakers	Usage
01	Roof & Door Module
02	Roof Pump
08	Power Seats

Engine Compartment Fuse Block

The fuse block is located under the hood in the engine compartment on the driver's side of the vehicle. See *Engine Compartment Overview on page 5-12* for more information on location.

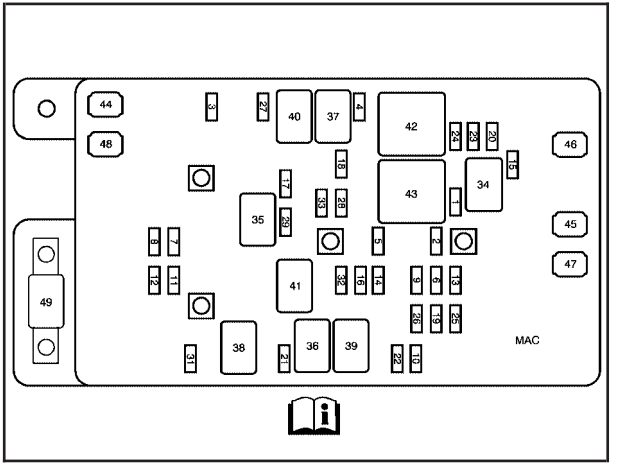

To remove the fuse block cover and access the fuses, do the following:

1. To remove the primary fuse block cover, press in on the two locking tabs and then lift the cover off.
2. Lift up on the secondary cover to remove it.
3. Reverse the steps to reinstall the covers.

Fuses	Usage
1	Air Conditioning
2	Automatic Transmission Shift Lock Control System
3	Canister, Fuel System
4	Ignition

Fuses	Usage
5	Starter
6	Ignition
7	Driver’s Side High Beam Headlamp
8	Passenger’s Side High Beam Headlamp
9	Ignition
10	Instrument Panel Cluster, Driver Information Center (DIC)
11	Driver’s Side Low Beam Headlamp
12	Passenger’s Side Low Beam Headlamp
13	Powertrain Control Module (PCM)
14	Air Bag System
15	Truck Body Controller
16	Truck Body Control, Ignition
17	Driver’s Side Stoplamp/Turn Signals
18	Passenger’s Side Stoplamp/Turn Signals
19	Back-up Lamps
20	Throttle Actuator Control (TAC)

Fuses	Usage
21	Fog Lamps
22	Horn
23	Injector A
24	Injector B
25	Oxygen Sensor A
26	Oxygen Sensor B
27	Windshield Washer
28	Cigarette Lighter
29	Powertrain Control Module (PCM)
30	Blank
31	Cargo Cover Release
32	Hazard Warning Flashers
33	Stoplamps
44	Engine Cooling Fan
45	Climate Control Fan
46	Ignition A
47	Ignition B
48	Anti-lock Brake System (ABS)
49	Body Fuse

Relays	Usage
34	Air Conditioning
35	Fuel Pump
36	Fog Lamps
37	High Beam Headlamps
38	Cargo Cover Release
39	Horn
40	Windshield Washer
41	Headlamp Driver Module
42	Ignition
43	Starter

Relay Center

There is a relay center located in the area where the convertible top is stored when it is open. To access the relay center, do the following:

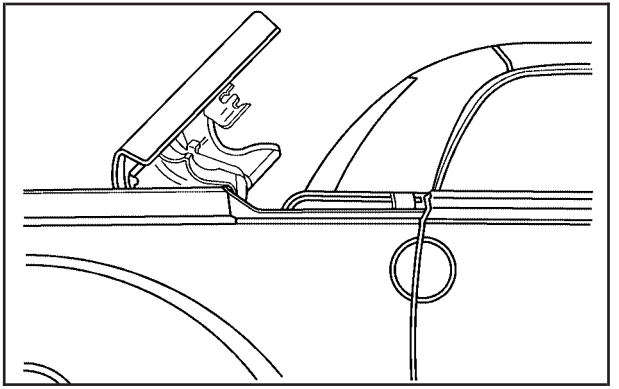

1. Open the convertible top until the roof tonneau and the boot cover panel are upright so that you can reach into the convertible top storage area as shown. See “Convertible Top Operation” under *Convertible Top on page 2-45* for more information.

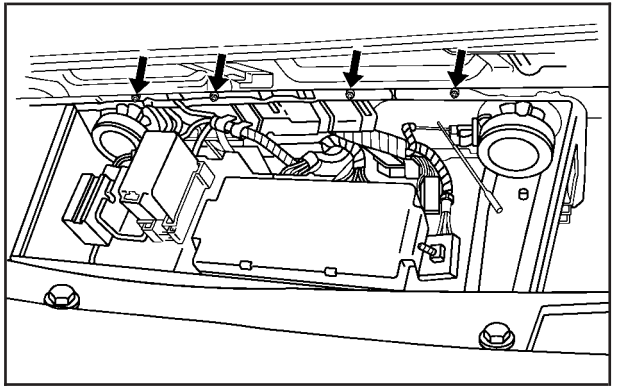

2. Locate the water-tight box that houses the relay center and remove the four nuts that secure the cover to the backside of the passenger compartment.
3. Press in the tabs on the sides of the cover and lift to remove the cover.

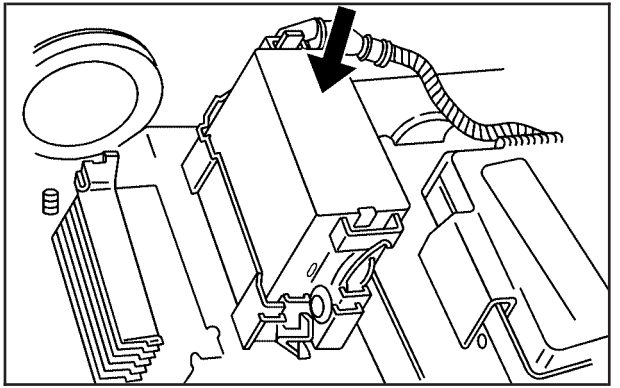

4. Locate the relay center inside the box. It is located toward the driver's side of the vehicle.
5. Press in the tabs at each end of the relay center cover and lift to remove.
6. Reverse the steps to reinstall the relay center cover and close the water-tight box.

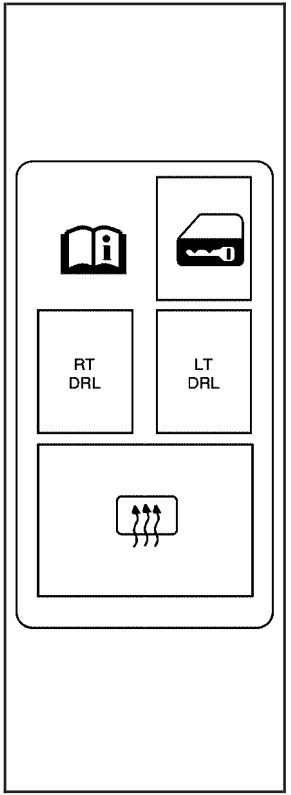

Following is a list of relays contained in the relay center.

Relays	Usage
	Driver's Door Lock
RT DRL	Passenger's Side Daytime Running Lamps (DRL)
LT DRL	Driver's Side Daytime Running Lamps (DRL)
	Rear Window Defogger

Capacities and Specifications

Refer to *Recommended Fluids and Lubricants on page 6-13* for more information. All capacities are approximate. When adding fluids, be sure to fill to the appropriate level, as recommended in this manual. Recheck the fluid level after filling.

Capacities and Specifications

Engine	VIN Code	Transmission	Spark Plug Gap
5.3L V8	T	M30	0.040 inches (1.01 mm)

Application	Capacities	
	English	Metric
Air conditioning Refrigerant R-134a	2.8 lbs	1.27 kg
Cooling System	15.3 quarts	14.5 L
Differential Fluid	4.0 quarts	6.6 L
Engine Oil with Filter	6.0 quarts	5.7 L
Fuel Tank	25.0 gallons	94.6 L
Rear Axle	2.4 quarts	2.3 L
Transmission (Drain and Refill)	5.0 quarts	4.7 L
Wheel Nut Torque	100 ft lb	140 N•m

Section 6 Maintenance Schedule

Maintenance Schedule 6-2
Introduction 6-2
Maintenance Requirements 6-2
Your Vehicle and the Environment 6-2
Using Your Maintenance Schedule 6-3
Scheduled Maintenance 6-4
Additional Required Services 6-6
Maintenance Footnotes 6-8
Owner Checks and Services 6-9
At Each Fuel Fill 6-9
At Least Once a Month 6-10
At Least Once a Year 6-10
Recommended Fluids and Lubricants 6-13
Normal Maintenance Replacement Parts 6-15
Engine Drive Belt Routing 6-16
Maintenance Record 6-17

Maintenance Schedule

Introduction

Important: Keep engine oil at the proper level and change as recommended.

Have you purchased the GM Protection Plan? The Plan supplements your new vehicle warranties. See your Warranty and Owner Assistance booklet or your dealer for details.

Maintenance Requirements

Notice: **Maintenance intervals, checks, inspections, replacement parts and recommended fluids and lubricants as prescribed in this manual are necessary to keep your vehicle in good working condition. Any damage caused by failure to follow scheduled maintenance may not be covered by warranty.**

Your Vehicle and the Environment

Proper vehicle maintenance not only helps to keep your vehicle in good working condition, but also helps the environment. All recommended maintenance is important. Improper vehicle maintenance can even affect the quality of the air we breathe. Improper fluid levels or the wrong tire inflation can increase the level of emissions from your vehicle. To help protect our environment, and to keep your vehicle in good condition, be sure to maintain your vehicle properly.

Using Your Maintenance Schedule

We at General Motors want to help you keep your vehicle in good working condition. But we do not know exactly how you will drive it. You may drive very short distances only a few times a week. Or you may drive long distances all the time in very hot, dusty weather. You may use your vehicle in making deliveries. Or you may drive it to work, to do errands or in many other ways.

Because of all the different ways people use their vehicles, maintenance needs vary. You may need more frequent checks and replacements. So please read the following and note how you drive. If you have any questions on how to keep your vehicle in good condition, see your GM Goodwrench dealer.

This schedule is for vehicles that:

- carry passengers and cargo within recommended limits. You will find these limits on the tire and loading information label. See *Loading Your Vehicle on page 4-32*.
- are driven on reasonable road surfaces within legal driving limits.
- use the recommended fuel. See *Gasoline Octane on page 5-5*.

The services in *Scheduled Maintenance on page 6-4* should be performed when indicated. See *Additional Required Services on page 6-6* and *Maintenance Footnotes on page 6-8* for further information.

⚠ CAUTION:

Performing maintenance work on a vehicle can be dangerous. In trying to do some jobs, you can be seriously injured. Do your own maintenance work only if you have the required know-how and the proper tools and equipment for the job. If you have any doubt, see your GM Goodwrench dealer to have a qualified technician do the work.

Some maintenance services can be complex. So, unless you are technically qualified and have the necessary equipment, you should have your GM Goodwrench dealer do these jobs.

When you go to your GM Goodwrench dealer for your service needs, you will know that GM-trained and supported service technicians will perform the work using genuine GM parts.

If you want to get service information, see *Service Publications Ordering Information on page 7-13*.

Owner Checks and Services on page 6-9 tells you what should be checked, when to check it and what you can easily do to help keep your vehicle in good condition.

The proper replacement parts, fluids and lubricants to use are listed in *Recommended Fluids and Lubricants on page 6-13* and *Normal Maintenance Replacement Parts on page 6-15*. When your vehicle is serviced, make sure these are used. All parts should be replaced and all necessary repairs done before you or anyone else drives the vehicle. We recommend the use of genuine GM parts.

Scheduled Maintenance

When the CHANGE ENGINE OIL light comes on, it means that service is required for your vehicle. Have your vehicle serviced as soon as possible within the next 600 miles (1 000 km). It is possible that, if you are driving under the best conditions, the engine oil life system may not indicate that vehicle service is necessary for over a year. However, your engine oil and filter must be changed at least once a year and at this time the system must be reset. Your GM Goodwrench dealer has GM-trained service technicians who will perform this work using genuine GM parts and reset the system.

If the engine oil life system is ever reset accidentally, you must service your vehicle within 3,000 miles (5 000 km) since your last service. Remember to reset the oil life system whenever the oil is changed. See *Engine Oil on page 5-13* for information on the Engine Oil Life System and resetting the system.

When the CHANGE ENGINE OIL light appears, certain services, checks and inspections are required. Required services are described in the following for “Maintenance I” and “Maintenance II.” Generally, it is recommended that your first service be Maintenance I, your second service be Maintenance II and that you alternate Maintenance I and Maintenance II thereafter. However, in some cases, Maintenance II may be required more often.

Maintenance I — Use Maintenance I if the CHANGE ENGINE OIL light comes on within ten months since vehicle was purchased or Maintenance II was performed.

Maintenance II — Use Maintenance II if the previous service performed was Maintenance I. Always use Maintenance II whenever the light comes on ten months or more since the last service or if the light has not come on at all for one year.

Scheduled Maintenance

Service	Maintenance I	Maintenance II
Change engine oil and filter. Reset oil life system. See *Engine Oil on page 5-13*. *An Emission Control Service.*	•	•
Visually check for any leaks or damage. *See footnote (g).*	•	•
Inspect engine air cleaner filter. If necessary, replace filter. See *Engine Air Cleaner/Filter on page 5-19*. *An Emission Control Service. See footnote †.*	•	•
Check tire inflation pressures and tire wear. See *Tires on page 5-51*.	•	•
Inspect brake system. *See footnote (a).*	•	•
Check engine coolant and windshield washer fluid levels and add fluid as needed.	•	•
Perform any needed additional services. See “Additional Required Services” in this section.	•	•
Inspect suspension and steering components. *See footnote (b).*		•
Inspect engine cooling system. *See footnote (c).*		•
Inspect wiper blades. *See footnote (d).*		•
Inspect restraint system components. *See footnote (e).*		•
Lubricate body components. *See footnote (f).*		•
Check transmission fluid level and add fluid as needed.		•

Additional Required Services

The following services should be performed at the first maintenance service (I or II) after the indicated miles (kilometers) shown for each item.

Additional Required Services

Service and Miles (Kilometers)	25,000 (41 500)	50,000 (83 000)	75,000 (125 000)	100,000 (166 000)	125,000 (207 500)	150,000 (240 000)
Inspect fuel system for damage or leaks.	•	•	•	•	•	•
Inspect exhaust system for loose or damaged components.	•	•	•	•	•	•
Replace fuel filter. *An Emission Control Service. See footnote †.*	•	•	•	•	•	•
Replace engine air cleaner filter. See *Engine Air Cleaner/Filter on page 5-19*. *An Emission Control Service.*	•	•	•	•	•	•
Change automatic transmission fluid and filter (severe service). *See footnote (h).*	•	•	•	•	•	•

Additional Required Services (cont'd)

Service and Miles (Kilometers)	25,000 (41 500)	50,000 (83 000)	75,000 (125 000)	100,000 (166 000)	125,000 (207 500)	150,000 (240 000)
Change automatic transmission fluid and filter (normal service).		•		•		•
Replace spark plugs. *An Emission Control Service.*				•		
Inspect spark plug wires. *An Emission Control Service.*				•		
Engine cooling system service (or every 5 years, whichever occurs first). *An Emission Control Service. See footnote (i).*						•
Inspect engine accessory drive belt. *An Emission Control Service.*						•

Maintenance Footnotes

† *The U.S. Environmental Protection Agency or the California Air Resources Board has determined that the failure to perform this maintenance item will not nullify the emission warranty or limit recall liability prior to the completion of the vehicle's useful life. We, however, urge that all recommended maintenance services be performed at the indicated intervals and the maintenance be recorded.*

(a) *Visually inspect brake lines and hoses for proper hook-up, binding, leaks, cracks, chafing, etc. Inspect disc brake pads for wear and rotors for surface condition. Inspect other brake parts, including calipers, parking brake, etc.*

(b) *Visually inspect front and rear suspension and steering system for damaged, loose or missing parts or signs of wear. Inspect power steering lines and hoses for proper hook-up, binding, leaks, cracks, chafing, etc.*

(c) *Visually inspect hoses and have them replaced if they are cracked, swollen or deteriorated. Inspect all pipes, fittings and clamps; replace with genuine GM parts as needed. To help ensure proper operation, a pressure test of the cooling system and pressure cap and cleaning the outside of the radiator and air conditioning condenser is recommended at least once a year.*

(d) *Visually inspect wiper blades for wear or cracking. Replace blade inserts that appear worn or damaged or that streak or miss areas of the windshield.*

(e) *Make sure the safety belt reminder light and all your belts, buckles, latch plates, retractors and anchorages are working properly. Look for any other loose or damaged safety belt system parts. If you see anything that might keep a safety belt system from doing its job, have it repaired. Have any torn or frayed safety belts replaced. Also look for any opened or broken air bag coverings, and have them repaired or replaced. (The air bag system does not need regular maintenance.)*

(f) *Lubricate all key lock cylinders, all body door and fuel door hinges, latches and locks, including glove box and console doors, hood assembly, secondary latch, pivots, spring anchor, release pawl and any moving seat hardware. Lubricate the hood safety lever pivot and prop rod pivot. More frequent lubrication may be required when exposed to a corrosive environment. Applying silicone grease on weatherstrips with a clean cloth will make them last longer, seal better and not stick or squeak.*

(g) *A fluid loss in any vehicle system could indicate a problem. Have the system inspected and repaired and the fluid level checked. Add fluid if needed.*

(h) *Change automatic transmission fluid and filter if the vehicle is mainly driven under one or more of these conditions:*

- *In heavy city traffic where the outside temperature regularly reaches 90°F (32°C) or higher.*
- *In hilly or mountainous terrain.*
- *When doing frequent trailer towing.*
- *Uses such as found in taxi, police or delivery service.*

(i) *Drain, flush and refill cooling system. See Engine Coolant on page 5-23* for what to use. Inspect hoses. Clean radiator, condenser, pressure cap and filler neck. Pressure test the cooling system and pressure cap.

Owner Checks and Services

These owner checks and services should be performed at the intervals specified to help ensure the safety, dependability and emission control performance of your vehicle. Your GM Goodwrench dealer can assist you with these checks and services.

Be sure any necessary repairs are completed at once. Whenever any fluids or lubricants are added to your vehicle, make sure they are the proper ones, as shown in *Recommended Fluids and Lubricants on page 6-13*.

At Each Fuel Fill

It is important to perform these underhood checks at each fuel fill.

Engine Oil Level Check

Check the engine oil level and add the proper oil if necessary. See *Engine Oil on page 5-13* for further details.

Notice: **It is important to check your oil regularly and keep it at the proper level. Failure to keep your engine oil at the proper level can cause damage to your engine not covered by your warranty.**

Engine Coolant Level Check

Check the engine coolant level and add DEX-COOL® coolant mixture if necessary. See *Engine Coolant on page 5-23* for further details.

Windshield Washer Fluid Level Check

Check the windshield washer fluid level in the windshield washer tank and add the proper fluid if necessary.

At Least Once a Month

Tire Inspection and Inflation Check

Visually inspect your tires for wear and make sure tires are inflated to the correct pressures. See *Tires on page 5-51* for further details.

At Least Once a Year

Starter Switch Check

⚠ CAUTION:

When you are doing this inspection, the vehicle could move suddenly. If the vehicle moves, you or others could be injured.

1. Before you start, be sure you have enough room around the vehicle.
2. Firmly apply both the parking brake and the regular brake. See *Parking Brake on page 2-18* if necessary.

   Do not use the accelerator pedal, and be ready to turn off the engine immediately if it starts.
3. Try to start the engine in each gear. The starter should work only in PARK (P) or NEUTRAL (N). If the starter works in any other position, contact your GM Goodwrench dealer for service.

Automatic Transmission Shift Lock Control System Check

⚠ CAUTION:

When you are doing this inspection, the vehicle could move suddenly. If the vehicle moves, you or others could be injured.

1. Before you start, be sure you have enough room around the vehicle. It should be parked on a level surface.
2. Firmly apply the parking brake. See *Parking Brake on page 2-18* if necessary.

   Be ready to apply the regular brake immediately if the vehicle begins to move.
3. With the engine off, turn the key to the RUN position, but do not start the engine. Without applying the regular brake, try to move the shift lever out of PARK (P) with normal effort. If the shift lever moves out of PARK (P), contact your GM Goodwrench dealer for service.

Ignition Transmission Lock Check

While parked, and with the parking brake set, try to turn the ignition key to OFF in each shift lever position.

- The key should turn to OFF only when the shift lever is in PARK (P).
- The key should come out only in OFF.

Contact your GM Goodwrench dealer if service is required.

Parking Brake and Automatic Transmission Park (P) Mechanism Check

⚠ CAUTION:

When you are doing this check, your vehicle could begin to move. You or others could be injured and property could be damaged. Make sure there is room in front of your vehicle in case it begins to roll. Be ready to apply the regular brake at once should the vehicle begin to move.

Park on a fairly steep hill, with the vehicle facing downhill. Keeping your foot on the regular brake, set the parking brake.

- To check the parking brake's holding ability: With the engine running and transmission in NEUTRAL (N), slowly remove foot pressure from the regular brake pedal. Do this until the vehicle is held by the parking brake only.
- To check the PARK (P) mechanism's holding ability: With the engine running, shift to PARK (P). Then release the parking brake followed by the regular brake.

Contact your GM Goodwrench dealer if service is required.

Underbody Flushing Service

At least every spring, use plain water to flush any corrosive materials from the underbody. Take care to clean thoroughly any areas where mud and other debris can collect.

Recommended Fluids and Lubricants

Fluids and lubricants identified below by name, part number or specification may be obtained from your dealer.

Usage	Fluid/Lubricant
Engine Oil	Engine oil which meets GM Standard GM6094M and displays the American Petroleum Institute Certified for Gasoline Engines starburst symbol. GM Goodwrench oil meets all the requirements for your vehicle. To determine the proper viscosity for your vehicle's engine, see *Engine Oil on page 5-13*.
Engine Coolant	50/50 mixture of clean, drinkable water and use only DEX-COOL® Coolant. See *Engine Coolant on page 5-23*.

Usage	Fluid/Lubricant
Hydraulic Brake System	Delco Supreme 11 Brake Fluid or equivalent DOT-3 brake fluid.
Windshield Washer Solvent	GM Optikleen® Washer Solvent.
Parking Brake Cable Guides	Chassis Lubricant (GM Part No. U.S. 12377985, in Canada 88901242) or lubricant meeting requirements of NLGI #2, Category LB or GC-LB.
Power Steering System	GM Power Steering Fluid (GM Part No. U.S. 89021184, in Canada 89021186).
Automatic Transmission	DEXRON®-III Automatic Transmission Fluid.
Key Lock Cylinders	Multi-Purpose Lubricant, Superlube (GM Part No. U.S. 12346241, in Canada 10953474).

Usage	Fluid/Lubricant
Chassis Lubrication	Chassis Lubricant (GM Part No. U.S. 12377985, in Canada 88901242) or lubricant meeting requirements of NLGI #2, Category LB or GC-LB.
Rear Axle	SAE 75W-90 Synthetic Axle Lubricant (GM Part No. U.S. 12378261, in Canada 10953455) meeting GM Specification 9986115.
Hood Latch Assembly, Secondary Latch, Pivots, Spring Anchor and Release Pawl	Lubriplate Lubricant Aerosol (GM Part No. U.S. 12346293, in Canada 992723) or lubricant meeting requirements of NLGI #2, Category LB or GC-LB.

Usage	Fluid/Lubricant
Hood and Door Hinges, Fuel Filler Door and Folding Seats	Multi-Purpose Lubricant, Superlube (GM Part No. U.S. 12346241, in Canada 10953474).
Tailgate Handle Pivot Points, Hinges, Latch Bolt and Linkage	Multi-Purpose Lubricant, Superlube (GM Part No. U.S. 12346241, in Canada 10953474).
Weatherstrip Conditioning	Dielectric Silicone Grease (GM Part No. U.S. 12345579, in Canada 992887).
Weatherstrip Squeaks	Synthetic Grease with Teflon, Superlube (GM Part No. U.S. 12371287, in Canada 10953437).

Normal Maintenance Replacement Parts

Replacement parts identified below by name, part number, or specification can be obtained from your dealer.

Part	GM® Part Number	ACDelco® Part Number
Automatic Transmission Filter Kit	24200796	—
Engine Air Cleaner	15036141	A2014C
Engine Oil Filter	25010633	PF44
Fuel Filter	88983068	GF831
Spark Plugs	12571164	41–985
Windshield Wiper Blade	20.0 inches (50.8 cm)	

Engine Drive Belt Routing

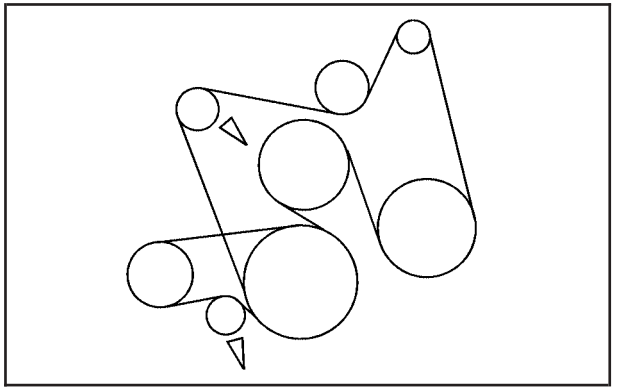

Maintenance Record

After the scheduled services are performed, record the date, odometer reading, who performed the service and the type of services performed in the boxes provided. See *Maintenance Requirements on page 6-2* in this section. Any additional information from *Owner Checks and Services on page 6-9* can be added on the following record pages. Also, you should retain all maintenance receipts.

Maintenance Record

Date	Odometer Reading	Serviced By	Maintenance I or Maintenance II	Services Performed

Maintenance Record (cont'd)

Date	Odometer Reading	Serviced By	Maintenance I or Maintenance II	Services Performed

Maintenance Record (cont'd)

Date	Odometer Reading	Serviced By	Maintenance I or Maintenance II	Services Performed

Maintenance Record (cont'd)

Date	Odometer Reading	Serviced By	Maintenance I or Maintenance II	Services Performed

Section 7 Customer Assistance and Information

Customer Assistance and Information 7-2
Customer Satisfaction Procedure 7-2
Online Owner Center 7-4
Customer Assistance for Text Telephone (TTY) Users 7-4
Customer Assistance Offices 7-4
GM Mobility Program for Persons with Disabilities 7-6
Roadside Assistance Program 7-6
Courtesy Transportation 7-8
Vehicle Data Collection and Event Data Recorders 7-10
Reporting Safety Defects 7-12
Reporting Safety Defects to the United States Government 7-12
Reporting Safety Defects to the Canadian Government 7-12
Reporting Safety Defects to General Motors 7-12
Service Publications Ordering Information 7-13

Customer Assistance and Information

Customer Satisfaction Procedure

Your satisfaction and goodwill are important to your dealer and to Chevrolet. Normally, any concerns with the sales transaction or the operation of your vehicle will be resolved by your dealer's sales or service departments. Sometimes, however, despite the best intentions of all concerned, misunderstandings can occur. If your concern has not been resolved to your satisfaction, the following steps should be taken:

STEP ONE: Discuss your concern with a member of dealership management. Normally, concerns can be quickly resolved at that level. If the matter has already been reviewed with the sales, service or parts manager, contact the owner of the dealership or the general manager.

STEP TWO: If after contacting a member of dealership management, it appears your concern cannot be resolved by the dealership without further help, contact the Chevrolet Customer Assistance Center by calling 1-800-222-1020. In Canada, contact GM of Canada Customer Communication Centre in Oshawa by calling 1-800-263-3777 (English) or 1-800-263-7854 (French).

We encourage you to call the toll-free number in order to give your inquiry prompt attention. Please have the following information available to give the Customer Assistance Representative:

- Vehicle Identification Number (This is available from the vehicle registration or title, or the plate at the top left of the instrument panel and visible through the windshield.)
- Dealership name and location
- Vehicle delivery date and present mileage

When contacting Chevrolet, please remember that your concern will likely be resolved at a dealer's facility. That is why we suggest you follow Step One first if you have a concern.

STEP THREE: Both General Motors and your dealer are committed to making sure you are completely satisfied with your new vehicle. However, if you continue to remain unsatisfied after following the procedure outlined in Steps One and Two, you should file with the BBB Auto Line Program to enforce any additional rights you may have. Canadian owners refer to your Warranty and Owner Assistance Information booklet for information on the Canadian Motor Vehicle Arbitration Plan (CAMVAP).

The BBB Auto Line Program is an out of court program administered by the Council of Better Business Bureaus to settle automotive disputes regarding vehicle repairs or the interpretation of the New Vehicle Limited Warranty. Although you may be required to resort to this informal dispute resolution program prior to filing a court action, use of the program is free of charge and your case will generally be heard within 40 days. If you do not agree with the decision given in your case, you may reject it and proceed with any other venue for relief available to you.

You may contact the BBB Auto Line Program using the toll-free telephone number or write them at the following address:

BBB Auto Line Program
Council of Better Business Bureaus, Inc.
4200 Wilson Boulevard
Suite 800
Arlington, VA 22203-1804

Telephone: 1-800-955-5100

This program is available in all 50 states and the District of Columbia. Eligibility is limited by vehicle age, mileage and other factors. General Motors reserves the right to change eligibility limitations and/or discontinue its participation in this program.

Online Owner Center

The Owner Center is a resource for your GM ownership needs. You can find your specific vehicle information all in one place.

The Owner Center allows you to:

- Get e-mail service reminders.
- Access information about your specific vehicle, including tips and videos and an electronic version of this owner's manual. (United States only)
- Keep track of your vehicle's service history and maintenance schedule.
- Find GM dealers for service nationwide.
- Receive special promotions and privileges only available to members. (United States only)

Refer to the web for updated information.

To register your vehicle, visit www.MyGMLink.com. (United States) or My GM Canada within www.gmcanada.com (Canada).

Customer Assistance for Text Telephone (TTY) Users

To assist customers who are deaf, hard of hearing, or speech-impaired and who use Text Telephones (TTYs), Chevrolet has TTY equipment available at its Customer Assistance Center. Any TTY user can communicate with Chevrolet by dialing: 1-800-833-CHEV (2438). (TTY users in Canada can dial 1-800-263-3830.)

Customer Assistance Offices

Chevrolet encourages customers to call the toll-free number for assistance. If a U.S. customer wishes to write to Chevrolet, the letter should be addressed to Chevrolet's Customer Assistance Center.

United States – Customer Assistance

Chevrolet Motor Division
Chevrolet Customer Assistance Center
P.O. Box 33170
Detroit, MI 48232-5170

1-800-222-1020
1-800-833-2438 (For Text Telephone devices (TTYs))
Roadside Assistance: 1-800-CHEV-USA® (243-8872)
Fax Number: 313-381-0022

From Puerto Rico:
1-800-496-9992 (English)
1-800-496-9993 (Spanish)
Fax Number: 313-381-0022

From U.S. Virgin Islands:
1-800-496-9994
Fax Number: 313-381-0022

Canada – Customer Assistance

General Motors of Canada Limited
Customer Communication Centre, 163-005
1908 Colonel Sam Drive
Oshawa, Ontario L1H 8P7

1-800-263-3777 (English)
1-800-263-7854 (French)
1-800-263-3830 (For Text Telephone devices (TTYs))
Roadside Assistance: 1-800-268-6800

Overseas – Customer Assistance

Please contact the local General Motors Business Unit.

Mexico, Central America and Caribbean Islands/Countries (Except Puerto Rico and U.S. Virgin Islands) – Customer Assistance

General Motors de Mexico, S. de R.L. de C.V.
Customer Assistance Center
Paseo de la Reforma # 2740
Col. Lomas de Bezares
C.P. 11910, Mexico, D.F.
01-800-508-0000
Long Distance: 011-52-53 29 0 800

GM Mobility Program for Persons with Disabilities

This program, available to qualified applicants, can reimburse you up to $1,000 toward eligible aftermarket driver or passenger adaptive equipment you may require for your vehicle (hand controls, wheelchair/ scooter lifts, etc.).

This program can also provide you with free resource information, such as area driver assessment centers and mobility equipment installers. The offer is available for a limited period of time from the date of vehicle purchase/lease. For more details, or to determine your vehicle's eligibility, see your GM dealer or call the GM Mobility Assistance Center at 1-800-323-9935. Text telephone (TTY) users, call 1-800-833-9935.

GM of Canada also has a Mobility Program. Call 1-800-GM-DRIVE (463-7483) for details. All TTY users call 1-800-263-3830.

Roadside Assistance Program

Security While You Travel

1-800-CHEV-USA (243-8872)

As the proud owner of a new Chevrolet vehicle, you are automatically enrolled in the Chevrolet Roadside Assistance program. This value-added service is intended to provide you with peace of mind as you drive in the city or travel the open road. Chevrolet's Roadside Assistance toll-free number is staffed by courteous and capable Roadside Assistance Representatives who are available 24 hours a day, 365 days a year.

We will provide the following services during the Bumper-to-Bumper warranty period, at no expense to you:

- **Fuel Delivery:** Delivery of enough fuel ($5 maximum) for the customer to get to the nearest service station.
- **Lock-out Service (identification required):** Replacement keys or locksmith service will be covered at no charge if you are unable to gain entry into your vehicle. Delivery of the replacement key will be covered within 10 miles.

- **Emergency Tow:** Tow to the nearest dealership for warranty service or in the event of a vehicle-disabling accident. Assistance when the vehicle is mired in sand, mud or snow.
- **Flat Tire Change:** Installation of a spare tire will be covered at no charge. (The customer is responsible for the repair or replacement of the tire if not covered by a warrantable failure.)
- **Jump Start:** No-start occurrences which require a battery jump start will be covered at no charge.
- **Dealer Locator Service**

In many instances, mechanical failures are covered under Chevrolet's Bumper-to-Bumper warranty. However, when other services are utilized, our Roadside Assistance Representatives will explain any payment obligations you might incur.

For prompt and efficient assistance when calling, please provide the following to the Roadside Assistance Representative:

- Your name, home address, and home telephone number
- Telephone number of your location
- Location of the vehicle
- Model, year, color, and license plate number
- Mileage, Vehicle Identification Number and delivery date of the vehicle
- Description of the problem

While we hope you never have the occasion to use our service, it is added security while traveling for you and your family. Remember, we are only a phone call away. Chevrolet Roadside Assistance: 1-800-CHEV-USA (1-800-234-8872), text telephone (TTY) users, call 1-888-889-2438.

Chevrolet reserves the right to limit services or reimbursement to an owner or driver when, in Chevrolet's judgement, the claims become excessive in frequency or type of occurrence.

Roadside Assistance is not part of or included in the coverage provided by the New Vehicle Limited Warranty. Chevrolet reserves the right to make any changes or discontinue the Roadside Assistance program at any time without notification.

Canadian Roadside Assistance

Vehicles purchased in Canada have an extensive roadside assistance program accessible from anywhere in Canada or the United States. Please refer to the Warranty and Owner Assistance Information book.

Courtesy Transportation

Chevrolet has always exemplified quality and value in its offering of motor vehicles. To enhance your ownership experience, we and our participating dealers are proud to offer Courtesy Transportation, a customer support program for new vehicles.

The Courtesy Transportation program is offered to retail purchase/lease customers in conjunction with the Bumper-to-Bumper coverage provided by the New Vehicle Limited Warranty. Several transportation options are available when warranty repairs are required. This will reduce your inconvenience during warranty repairs.

Plan Ahead When Possible

When your vehicle requires warranty service, you should contact your dealer and request an appointment. By scheduling a service appointment and advising your service consultant of your transportation needs, your dealer can help minimize your inconvenience.

If your vehicle cannot be scheduled into the service department immediately, keep driving it until it can be scheduled for service, unless, of course, the problem is safety-related. If it is, please call your dealership, let them know this, and ask for instructions.

If the dealer requests that you simply drop the vehicle off for service, you are urged to do so as early in the work day as possible to allow for same day repair.

Transportation Options

Warranty service can generally be completed while you wait. However, if you are unable to wait Chevrolet helps minimize your inconvenience by providing several transportation options. Depending on the circumstances, your dealer can offer you one of the following:

Shuttle Service

Participating dealers can provide you with shuttle service to get you to your destination with minimal interruption of your daily schedule. This includes a one way or round trip shuttle service to a destination up to 10 miles (16 km) from the dealership.

Public Transportation or Fuel Reimbursement

If your vehicle requires overnight warranty repairs, reimbursement (five day maximum) may be available for the use of public transportation such as taxi or bus. In addition, should you arrange transportation through a friend or relative, reimbursement for reasonable fuel expenses (five day maximum) may be available. Claim amounts should reflect actual costs and be supported by original receipts.

Courtesy Rental Vehicle

Your dealer may arrange to provide you with a courtesy rental vehicle or reimburse you for a rental vehicle you obtained if your vehicle is kept for a warranty repair. Reimbursement will be limited to a maximum of $30.00 a day and must be supported by receipts. This requires that you sign and complete a rental agreement and meet state, local and rental vehicle provider requirements. Requirements vary and may include minimum age requirements, insurance coverage, credit card, etc. You are responsible for fuel usage charges and may also be responsible for taxes, levies, usage fees, excessive mileage or rental usage beyond the completion of the repair.

Generally it is not possible to provide a like-vehicle as a courtesy rental.

Additional Program Information

Courtesy Transportation is available during the Bumper-to-Bumper warranty coverage period, but it *is not* part of the New Vehicle Limited Warranty. A separate booklet entitled “Warranty and Owner Assistance Information” furnished with each new vehicle provides detailed warranty coverage information.

Courtesy Transportation is available only at participating dealers and all program options, such as shuttle service, may not be available at every dealer. Please contact you dealer for specific information about availability. All Courtesy Transportation arrangements will be administered by appropriate dealer personnel.

Canadian Vehicles: For warranty repairs during the Complete Vehicle Coverage period of the General Motors of Canada New Vehicle Limited Warranty, alternative transportation may be available under the Courtesy Transportation Program. Please consult your dealer for details.

General Motors reserves the right to unilaterally modify, change or discontinue Courtesy Transportation at any time and to resolve all questions of claim eligibility pursuant to the terms and conditions described herein at its sole discretion.

Vehicle Data Collection and Event Data Recorders

Your vehicle, like other modern motor vehicles, has a number of sophisticated computer systems that monitor and control several aspects of the vehicle’s performance. Your vehicle uses on-board vehicle computers to monitor emission control components to optimize fuel economy, to monitor conditions for air bag deployment and, if so equipped, to provide anti-lock braking and to help the driver control the vehicle in difficult driving situations. Some information may be stored during regular operations to facilitate repair of detected malfunctions; other information is stored only in a crash or near crash event by computer systems commonly called event data recorders (EDR).

In a crash or near crash event, computer systems, such as the Air Bag Sensing and Diagnostic Module (SDM) in your vehicle may record information about the condition of the vehicle and how it was operated, such as engine speed, brake applications, throttle position, vehicle speed, safety belt usage, air bag readiness, air bag performance data, and the severity of a collision. This information has been used to improve vehicle crash performance and may be used to improve crash performance of future vehicles and driving safety. Unlike the data recorders on many airplanes, these on-board systems do not record sounds, such as conversation of vehicle occupants.

To read this information, special equipment is needed and access to the vehicle or the SDM is required. GM will not access information about a crash event or share it with others other than

- with the consent of the vehicle owner or, if the vehicle is leased, with the consent of the lessee,
- in response to an official request of police or similar government office,
- as part of GM's defense of litigation through the discovery process, or
- as required by law.

In addition, once GM collects or receives data, GM may

- use the data for GM research needs,
- make it available for research where appropriate confidentiality is to be maintained and need is shown, or
- share summary data which is not tied to a specific vehicle with non-GM organizations for research purposes.

Others, such as law enforcement, may have access to the special equipment that can read the information if they have access to the vehicle or SDM.

If your vehicle is equipped with OnStar®, please check the OnStar® subscription service agreement or manual for information on its operations and data collection.

Reporting Safety Defects

Reporting Safety Defects to the United States Government

If you believe that your vehicle has a defect which could cause a crash or could cause injury or death, you should immediately inform the National Highway Traffic Safety Administration (NHTSA), in addition to notifying General Motors.

If NHTSA receives similar complaints, it may open an investigation, and if it finds that a safety defect exists in a group of vehicles, it may order a recall and remedy campaign. However, NHTSA cannot become involved in individual problems between you, your dealer or General Motors.

To contact NHTSA, you may either call the Auto Safety Hotline toll-free at 1-800-424-9393 (or 366-0123 in the Washington, D.C. area) or write to:

NHTSA, U.S. Department of Transportation
Washington, D.C. 20590

You can also obtain other information about motor vehicle safety from the hotline.

Reporting Safety Defects to the Canadian Government

If you live in Canada, and you believe that your vehicle has a safety defect, you should immediately notify Transport Canada, in addition to notifying General Motors of Canada Limited. You may write to:

Transport Canada
330 Sparks Street
Tower C
Ottawa, Ontario K1A 0N5

Reporting Safety Defects to General Motors

In addition to notifying NHTSA (or Transport Canada) in a situation like this, we certainly hope you'll notify us. Please call us at 1-800-222-1020, or write:

Chevrolet Motor Division
Chevrolet Customer Assistance Center
P.O. Box 33170
Detroit, MI 48232-5170

In Canada, please call us at 1-800-263-3777 (English) or 1-800-263-7854 (French). Or, write:

General Motors of Canada Limited
Customer Communication Centre, 163-005
1908 Colonel Sam Drive
Oshawa, Ontario L1H 8P7

Service Publications Ordering Information

Service Manuals

Service Manuals have the diagnosis and repair information on engines, transmission, axle, suspension, brakes, electrical, steering, body, etc.

RETAIL SELL PRICE: $120.00

Transmission, Transaxle, Transfer Case Unit Repair Manual

This manual provides information on unit repair service procedures, adjustments, and specifications for GM transmissions, transaxles, and transfer cases.

RETAIL SELL PRICE: $50.00

Service Bulletins

Service Bulletins give technical service information needed to knowledgeably service General Motors cars and trucks. Each bulletin contains instructions to assist in the diagnosis and service of your vehicle.

In Canada, information pertaining to Product Service Bulletins can be obtained by contacting your General Motors dealer or by calling 1-800-GM-DRIVE (1-800-463-7483).

Owner's Information

Owner publications are written specifically for owners and intended to provide basic operational information about the vehicle. The owner's manual will include the Maintenance Schedule for all models.

In-Portfolio: Includes a Portfolio, Owner's Manual, and Warranty Booklet.

RETAIL SELL PRICE: $35.00

Without Portfolio: Owner's Manual only.

RETAIL SELL PRICE: $25.00

Current and Past Model Order Forms

Service Publications are available for current and past model GM vehicles. To request an order form, please specify year and model name of the vehicle.

ORDER TOLL FREE: 1-800-551-4123 Monday-Friday 8:00 AM - 6:00 PM Eastern Time

For Credit Card Orders Only
(VISA-MasterCard-Discover), visit Helm, Inc. on the World Wide Web at: www.helminc.com

Or you can write to:

Helm, Incorporated
P. O. Box 07130
Detroit, MI 48207

Prices are subject to change without notice and without incurring obligation. Allow ample time for delivery.

Note to Canadian Customers: All listed prices are quoted in U.S. funds. Canadian residents are to make checks payable in U.S. funds.

A

Accessing the Tire Inflator Kit 5-68
Accessory Power Outlets 3-17
Adding Washer Fluid 5-32
Additional Program Information 7-10
Additives, Fuel 5-6
Add-On Electrical Equipment 5-83
Add-On Equipment 4-38
Adjusting the Speakers (Balance/Fade) 3-64, 3-74
Air Bag
  Off Light 3-28
  Readiness Light 3-26
Air Bag Systems 1-42
  Air Bag Off Switch 1-51
  How Does an Air Bag Restrain? 1-48
  Servicing Your Air Bag-Equipped Vehicle 1-55
  What Makes an Air Bag Inflate? 1-48
  What Will You See After an Air Bag Inflates? 1-49
  When Should an Air Bag Inflate? 1-47
  Where Are the Air Bags? 1-45
Air Cleaner/Filter, Engine 5-19
Air Compressor 5-69
Airbag Sensing and Diagnostic Module (SDM) 7-10
AM 3-87
Antenna, Integrated Windshield 3-87
Anti-lock Brake System 4-7
Anti-Lock Brake, System Warning Light 3-31
Appearance Care 5-74
  Care of Safety Belts 5-77
  Chemical Paint Spotting 5-80
  Cleaning the Inside of Your Vehicle 5-74
  Cleaning the Outside of Your Vehicle 5-77
  Finish Damage 5-80
  Sheet Metal Damage 5-80
  Underbody Maintenance 5-80
  Vehicle Care/Appearance Materials 5-81
  Weatherstrips 5-77
Ashtrays 3-18
Audio System(s) 3-61
  Audio Steering Wheel Controls 3-86
  Care of Your CD Player 3-87
  Care of Your CDs 3-87
  Integrated Windshield Antenna 3-87
  Radio with CD 3-62
  Radio with Six-Disc CD 3-71
  Setting the Time 3-61
  Theft-Deterrent Feature 3-85
  Understanding Radio Reception 3-87
Automatic Headlamp System 3-13
Automatic Transmission
  Fluid 5-20
  Operation 2-16
Auxiliary Gage Package 3-41

B

Backing Up 4-49
Back-Up Lamps 5-48
Battery 5-36
Battery Not Charging 3-48
Battery Replacement 2-5
Battery Rundown Protection 3-16
Battery Voltage Too High 3-49
Battery Voltage Too Low 3-49
Before Leaving on a Long Trip 4-23
Brake
  Parking 2-18
  System Warning Light 3-30
Brake Adjustment 5-36
Brake Fluid 5-33
Brake Wear 5-35
Brakes 5-33
Braking 4-6
Braking in Emergencies 4-9
Break-In, New Vehicle 2-13
Bulb Replacement 5-43
  Back-Up Lamps 5-48
  Center High-Mounted Stoplamp (CHMSL) 5-47
  Front Turn Signal, Sidemarker
    and Parking Lamps 5-45
  Halogen Bulbs 5-44
  Headlamp Aiming 5-43
Bulb Replacement (cont.)
  Headlamps 5-44
  Replacement Bulbs 5-48
  Taillamps 5-47
Buying New Tires 5-60

C

California Fuel 5-5
Canada – Customer Assistance 7-5
Canadian Owners ii
Canadian Roadside Assistance 7-8
Capacities and Specifications 5-92
Carbon Monoxide 2-8, 2-21, 4-26, 4-39
Care of
  Safety Belts 5-77
  Your CD Player 3-87
  Your CDs 3-87
Cargo Cover 2-31
Cargo Cover Ajar 3-49
Cargo Net System 2-36
Cargo Tie Downs 2-34
CD Messages 3-70, 3-85
Center Console Fuse Block 5-84
Center Console Storage Area 2-30
Center Console Switchbank 3-17

Center High-Mounted Stoplamp (CHMSL) 5-47
Certification/Tire Label 4-36
Chains, Tires 5-65
Change Trans (Transmission) Fluid 3-49
Charging System Light 3-29
Check
  Engine Light 3-32
  Gages Warning Light 3-39
Check Engine Light 3-32
Check Oil Level 3-49
Checking Brake Fluid 5-34
Checking Coolant 5-25
Checking Engine Oil 5-13
Checking the Automatic Transmission
  Fluid Level 5-21
Checking Things Under the Hood 5-10
Chemical Paint Spotting 5-80
Child Restraints
  Child Restraint Systems 1-27
  Infants and Young Children 1-24
  Lower Anchorages and Top Tethers for
    Children (LATCH System) 1-32
  Older Children 1-21
  Securing a Child Restraint Designed for the
    LATCH System 1-34
Child Restraints (cont.)
  Securing a Child Restraint in the
    Passenger Seat Position 1-37
  Top Strap 1-30
  Top Strap Anchor Location 1-32
Cigarette Lighter 3-18
Cleaning
  Inside of Your Vehicle 5-74
  Outside of Your Vehicle 5-77
  Underbody Maintenance 5-80
  Weatherstrips 5-77
Cleaning Aluminum or Chrome-Plated Wheels 5-79
Cleaning Exterior Lamps/Lenses 5-78
Cleaning Fabric/Carpet 5-74
Cleaning Glass Surfaces 5-76
Cleaning Interior Plastic Components 5-76
Cleaning Leather 5-76
Cleaning the Top of the Instrument Panel 5-76
Cleaning the Windshield and Wiper Blades 5-79
Cleaning Tires 5-80
Cleaning Vinyl 5-76
Climate Control System 3-19
  Outlet Adjustment 3-22
Content Theft-Deferrent 2-11

Control of a Vehicle 4-6
Convertible Top 2-45
Convertible Top Operation 2-46
Coolant
  Engine Temperature Gage 3-32
  Surge Tank Pressure Cap 5-26
Cooling System 5-28
Cruise Control 3-8
Cruise Control Light 3-38
Cupholder(s) 2-30
Current and Past Model Order Forms 7-14
Customer Assistance Information
  Courtesy Transportation 7-8
  Customer Assistance for Text
    Telephone (TTY) Users 7-4
  Customer Assistance Offices 7-4
  Customer Satisfaction Procedure 7-2
  GM Mobility Program for Persons with
    Disabilities 7-6
  Reporting Safety Defects to General Motors 7-12
  Reporting Safety Defects to the
    Canadian Government 7-12
  Reporting Safety Defects to the
    United States Government 7-12
  Roadside Assistance Program 7-6
  Service Publications Ordering Information 7-13
Customizing Your Automatic Door Locks Feature ... 2-8

D

Daytime Running Lamps 3-14
Defensive Driving 4-2
Defogging and Defrosting 3-21
Depress Brake 3-49
Doing Your Own Service Work 5-3
Door
  Locks 2-6
  Power Door Locks 2-7
  Programmable Automatic Door Locks 2-8
Driver
  Position, Safety Belt 1-12
Driver Door Ajar 3-50
Driver Information Center (DIC) 3-44
  DIC Controls and Displays 3-44
  DIC Vehicle Personalization 3-55
  DIC Warnings and Messages 3-48
Driver's Seat 1-2
Driving
  At Night 4-16
  City 4-20
  Defensive 4-2
  Drunken 4-3
  Freeway 4-21
  Hill and Mountain Roads 4-24
  In Rain and on Wet Roads 4-17
  Winter 4-26

Driving On Grades 4-50
Driving on Snow or Ice 4-27
Driving Through Deep Standing Water 4-19
Driving Through Flowing Water 4-19
Driving with a Trailer 4-48
Brake Pedal Travel 5-35

E

Electrical System
  Add-On Equipment 5-83
  Fuses and Circuit Breakers 5-84
  Headlamps 5-83
  Power Windows and Other Power Options 5-83
  Windshield Wiper Fuses 5-83
Emergency Cargo Cover Release Handle 2-34
Emissions Inspection and
  Maintenance Programs 3-35
Engine
  Air Cleaner/Filter 5-19
  Battery 5-36
  Change Engine Oil Light 3-37
  Check and Service Engine Soon Light 3-32
  Coolant 5-23
  Coolant Temperature Gage 3-32
  Cover 5-18
  Drive Belt Routing 6-16
Engine (cont.)
  Engine Compartment Overview 5-12
  Exhaust 2-21
  Oil 5-13
  Overheating 5-26
  Reduced Power Light 3-38
  Starting 2-15
Engine Compartment Fuse Block 5-87
Engine Coolant Hot Idle Engine 3-50
Engine Cover Insert 5-18
Engine Oil Additives 5-16
Engine Overheated Stop Engine 3-50
Erasing HomeLink® Buttons 2-29
Event Data Recorders (EDR) 7-10
Exit Lighting 3-16
Express Down Window 2-10
Extender, Safety Belt 1-20
Exterior Lamps 3-12

F

Fan Knob 3-20
Filter
  Engine Air Cleaner 5-19
Finding a Program Type (PTY) Station 3-65, 3-75
Finding a Station 3-63, 3-72

Finish Care 5-78
Finish Damage 5-80
Flash-to-Pass 3-7
Flat Tire 5-66
Flip Hall Switch Fault 3-50
Floor Tracks 2-35
Fluid
  Automatic Transmission 5-20
  Power Steering 5-31
  Windshield Washer 5-31
FM 3-87
Fog Lamps 3-14
Following Distance 4-48
Front Map Lamps 3-16
Front Turn and Parking Lamps 5-45
Fuel 5-4
  Additives 5-6
  California Fuel 5-5
  Filling a Portable Fuel Container 5-9
  Filling Your Tank 5-7
  Fuels in Foreign Countries 5-6
  Gage 3-40
  Gasoline Octane 5-5
  Gasoline Specifications 5-5
Fuel Information 3-46
Fuel Level Low 3-51
Fuses
  Fuses and Circuit Breakers 5-84
  Windshield Wiper 5-83

G

Gage
  Check Gages Warning Light 3-39
  Engine Coolant Temperature 3-32
  Fuel 3-40
  Oil Pressure 3-36
  Speedometer 3-25
  Tachometer 3-25
Gage, Auxiliary Package 3-41
Garage Door Opener 2-26
Gasoline
  Octane 5-5
  Specifications 5-5
Gate Operator and Canadian Programming 2-29
Glove Box 2-30
GM Mobility Program for Persons with
  Disabilities 7-6

H

Hazard Warning Flashers 3-3
Hdr (Header) Latch Switch Fault 3-51
Headlamp
  Aiming 5-43
Headlamp High/Low-Beam Changer 3-6
Headlamps 5-44
  Bulb Replacement 5-43
  Electrical System 5-83
  Front Turn Signal, Sidemarker
    and Parking Lamps 5-45
  Halogen Bulbs 5-44
Heated Seats 1-3
Highbeam On Light 3-39
Highway Hypnosis 4-24
Hill and Mountain Roads 4-24
Hitches 4-43
HomeLink® Transmitter 2-26
HomeLink® Transmitter, Programming 2-27
Hood
  Checking Things Under 5-10
  Release 5-10
Horn 3-4
How to Add Automatic Transmission Fluid 5-23
How to Add Coolant to the Coolant Surge Tank 5-30
How to Check 5-59
How to Check Lubricant 5-43
How to Check Power Steering Fluid 5-31
How to Check the Automatic Transmission Fluid 5-21
How to Inspect the Engine Air Cleaner/Filter 5-19
How to Use This Manual ii
How to Wear Safety Belts Properly 1-12
Hydroplaning 4-19

I

If No Steam Is Coming From Your Engine 5-27
If Steam Is Coming From Your Engine 5-26
If the Light is Flashing 3-34
If the Light Is On Steady 3-34
If You Are Caught in a Blizzard 4-29
If You Are Stuck in Sand, Mud, Ice or Snow 4-31
If You Decide To Pull A Trailer 4-40
Ignition Positions 2-14
Infants and Young Children, Restraints 1-24
Inflation - Tire Pressure 5-58
Inflator Kit, Tire 5-67
Instrument Panel
  Cluster 3-24
  Overview 3-2
  Storage Area 2-30
Instrument Panel Brightness 3-15
Integrated Windshield Antenna 3-87
Interior Lamps 3-15

J

Jump Starting 5-37

K

Keyless Entry System 2-3
Keys 2-2

L

Lamps
  Exterior 3-12
  Interior 3-15
Lamps On Reminder 3-13
Lap-Shoulder Belt 1-12
LATCH System
  Child Restraints 1-32
  Securing a Child Restraint Designed for the
    LATCH System 1-34
Latches, Seatback 1-6
Leaving Your Vehicle 2-8
Leaving Your Vehicle With the Engine Running ... 2-20
Light
  Air Bag Off 3-28
  Air Bag Readiness 3-26
  Anti-Lock Brake System Warning 3-31
  Brake System Warning 3-30
  Change Engine Oil 3-37
  Charging System 3-29
  Check Gages Warning 3-39
  Cruise Control 3-38
  Highbeam On 3-39
  Malfunction Indicator 3-32
  Reduced Engine Power 3-38
  Safety Belt Reminder 3-26
  Security 3-37
  TCS Warning Light 3-31
  Traction Control System (TCS) Warning 3-31
Lighted Visor Vanity Mirrors 2-11
Loading Your Vehicle 4-32
Locks
  Door 2-6
  Leaving Your Vehicle 2-8
  Power Door 2-7
  Programmable Automatic Door Locks 2-8
Loss of Control 4-15

M

Maintenance Schedule
Additional Required Services 6-6
At Each Fuel Fill 6-9
At Least Once a Month 6-10
At Least Once a Year 6-10
Introduction 6-2
Maintenance Footnotes 6-8
Maintenance Record 6-17
Maintenance Requirements 6-2
Normal Maintenance Replacement Parts 6-15
Owner Checks and Services 6-9
Recommended Fluids and Lubricants 6-13
Scheduled Maintenance 6-4
Using Your 6-3
Your Vehicle and the Environment 6-2
Maintenance When Trailer Towing 4-51
Making Turns 4-49
Malfunction Indicator Light 3-32
Manually Open Tonneau 3-51
Map Pocket 2-30
Matching Transmitter(s) to Your Vehicle 2-5
Memory Seat 2-52
Message
DIC Warnings and Messages 3-48
Mexico, Central America and Caribbean Islands/Countries (Except Puerto Rico and U.S. Virgin Islands) – Customer Assistance 7-5
Mirrors
Automatic Dimming Rearview with HomeLink® ... 2-23
Manual Rearview Mirror 2-23
Outside Automatic Dimming Heated Mirror 2-25
Outside Convex Mirror 2-25
Outside Power Heated Mirrors 2-24
Mode Knob 3-20
MyGMLink.com 7-4

N

New Vehicle Break-In 2-13
Normal Maintenance Replacement Parts 6-15

O

Odometer 3-25
Odometer, Trip 3-25
Off-Road Recovery 4-13

Oil
Change Engine Oil Light 3-37
Engine 5-13
Pressure Gage 3-36
Oil Pressure Low Stop Engine 3-51
Older Children, Restraints 1-21
Online Owner Center 7-4
Opening the Cargo Cover 2-31
Other Warning Devices 3-4
Outlet Adjustment 3-22
Outside
Automatic Dimming Heated Mirror 2-25
Convex Mirror 2-25
Power Heated Mirrors 2-24
Overseas – Customer Assistance 7-5
Owner Checks and Services 6-9
Owners, Canadian ii
Owner's Information 7-13

P

Parade Dimming 3-16
Park (P)
Shifting Into 2-19
Shifting Out of 2-20
Parking
Brake 2-18
Over Things That Burn 2-21
Parking on Hills 4-50
Passenger Door Ajar 3-52
Passenger Position, Safety Belts 1-20
Passenger's Seat 1-3
Passing 4-13, 4-49
Passlock® 2-13
Payload 4-38
Perimeter Lighting 3-16
Personalization 3-48
Plan Ahead When Possible 7-8
Playing a CD 3-68, 3-78
Playing a Specific Loaded CD 3-80
Playing the Radio 3-62, 3-71
Power
Accessory Outlets 3-17
Door Locks 2-7
Electrical System 5-83
Reduced Engine Light 3-38
Seat 1-2
Steering Fluid 5-31
Windows 2-10
Power Steering 4-11
Programmable Automatic Door Locks 2-8
Programming the HomeLink® Transmitter 2-27
Programming the Power Windows 2-10
Put Vehicle in Park 3-52

Q

Questions and Answers About Safety Belts 1-11

R

Radio Data System (RDS) 3-65, 3-75
Radio Messages 3-68
Radios 3-61
  Care of Your CD Player 3-87
  Care of Your CDs 3-87
  Radio with CD 3-62
  Radio with Six-Disc CD 3-71
  Setting the Time 3-61
  Theft-Deterrent 3-85
  Understanding Reception 3-87
RDS Messages 3-67, 3-77
Rear Axle 5-43
Rear Window Defogger 3-22
Rearview Mirror, Automatic Dimming with
  HomeLink® 2-23
Rearview Mirrors 2-23
Reclining Seatbacks 1-4
Recommended Fluids and Lubricants 6-13
Recreational Vehicle Towing 4-32
Reduce Speed 3-52
Reduced Engine Power Light 3-38
Relay Center 5-89
Remote Keyless Entry System 2-3
Remote Keyless Entry System, Operation 2-4
Removing the Cargo Cover 2-32
Replacement Bulbs 5-48
Replacing Brake System Parts 5-36
Reporting Safety Defects
  Canadian Government 7-12
  General Motors 7-12
  United States Government 7-12
Reprogramming a Single HomeLink® Button 2-29
Resetting Defaults 2-30
Restraint System Check
  Checking Your Restraint Systems 1-55
  Replacing Restraint System Parts
    After a Crash 1-56
Restraint Systems
  Checking 1-55
  Replacing Parts 1-56
Rfa X Battery Low 3-52
Roadside
  Assistance Program 7-6
Rocking Your Vehicle To Get It Out 4-31
Roof Ajar 3-52
Roof Cycle Timeout 3-53
Roof Hall Switch Fault 3-53
Roof Tonneau 2-45
Routing, Engine Drive Belt 6-16
Running Your Engine While You Are Parked 2-22

S

Safety Belt
  Reminder Light 3-26
Safety Belts
  Care of 5-77
  Driver Position 1-12
  How to Wear Safety Belts Properly 1-12
  Passenger Position 1-20
  Questions and Answers About Safety Belts 1-11
  Safety Belt Extender 1-20
  Safety Belt Use During Pregnancy 1-19
  Safety Belts Are for Everyone 1-6
Safety Chains 4-47
Safety Warnings and Symbols iii
Scheduled Maintenance 6-4
Seatback Latches 1-6
Seats
  Heated Seats 1-3
  Memory 2-52
  Power Seats 1-2
  Reclining Seatbacks 1-4
  Seatback Latches 1-6
Securing a Child Restraint
  Designed for the LATCH System 1-34
  Passenger Seat Position 1-37
Security Light 3-37
Security While You Travel 7-6
Select 3-48
Service 5-3
  Adding Equipment to the Outside of Your Vehicle 5-4
  Doing Your Own Work 5-3
  Engine Soon Light 3-32
  Publications Ordering Information 7-13
Service Air Bag 3-53
Service Brake System 3-53
Service Bulletins 7-13
Service Manuals 7-13
Setting Preset PTYs 3-66, 3-77
Setting Preset Stations 3-63, 3-73
Setting the Time 3-61
Setting the Tone (Bass/Treble) 3-64, 3-73
Sheet Metal Damage 5-80
Shifting Into Park (P) 2-19
Shifting Out of Park (P) 2-20
Sidemarker Lamps 5-46
Side-Saddle Storage 2-41
Skidding 4-15
Some Other Rainy Weather Tips 4-20
Special Fabric Cleaning Problems 5-75

Specifications, Capacities 5-92
Speedometer 3-25
Starting Your Engine 2-15
Steering 4-11
Steering in Emergencies 4-12
Steering Tips 4-11
Steering Wheel Controls, Audio 3-86
Steering Wheel, Tilt Wheel 3-5
Stop Vehicle 3-54
Storage
  Side-Saddle 2-41
Storage Areas
  Cargo Net System 2-36
  Center Console Storage Area 2-30
  Cupholder(s) 2-30
  Glove Box 2-30
  Instrument Panel Storage Area 2-30
  Map Pocket 2-30
Stuck in Sand, Mud, Ice or Snow 4-31
Sun Visors 2-11
Switchbanks
  Center Console 3-17

T

Tachometer 3-25
Tailgate 2-8
Taillamps 5-47
TCS Warning Light 3-31
Temperature Knob 3-19
Testing the Alarm 2-12
Theft-Deterrent, Radio 3-85
Theft-Deterrent Systems 2-11
  Content Theft-Deterrent 2-11
  Passlock® 2-13
Tilt Wheel 3-5
Tire Inflator Kit Storage 5-73
Tire Sealant 5-68
Tire Sidewall Labeling 5-52
Tire Size 5-54
Tire Terminology and Definitions 5-55
Tires 5-51
  Buying New Tires 5-60
  Chains 5-65
  If a Tire Goes Flat 5-66
  Inflation - Tire Pressure 5-58
  Inspection and Rotation 5-59
  Tire Inflator Kit 5-67
  Uniform Tire Quality Grading 5-61
  Wheel Alignment and Tire Balance 5-63
  Wheel Replacement 5-63
  When It Is Time for New Tires 5-60

Tlat (Tonneau Latch) Hall Switch Fault 3-54
Tonn (Tonneau) Hall Switch Fault 3-54
Tonn (Tonneau) Latd (Latched) Switch Fault 3-54
Top Strap 1-30
Top Strap Anchor Location 1-32
Torque Lock 2-20
Total Weight on Your Vehicle's Tires 4-43
Towing
  Recreational Vehicle 4-32
  Towing a Trailer 4-39
  Your Vehicle 4-32
Traction
  Control System (TCS) 4-9
  Control System Warning Light 3-31
Traction Active 3-54
Trailer
  Recommendations 4-38
Trailer Brakes 4-48
Trailer Wiring Harness 4-51
Trans (Transmission) Hot Idle 3-54
Transmission
  Fluid, Automatic 5-20
Transmission Operation, Automatic 2-16
Transmission, Transaxle, Transfer Case Unit
  Repair Manual 7-13
Transportation Options 7-8
Trip Information 3-46
Trip Odometer 3-25
Turn and Lane Change Signals 3-6
Turn Signal On 3-55
Turn Signal/Multifunction Lever 3-5
Turn Signals When Towing a Trailer 4-49

U

Understanding Radio Reception 3-87
Uniform Tire Quality Grading 5-61
United States – Customer Assistance 7-5
Unknown Speed 3-55
Using Cleaner on Fabric 5-75
Using HomeLink® 2-29
Using Song List Mode 3-83

V

Vehicle
Control 4-6
Damage Warnings iv
Loading 4-32
Symbols iv
Vehicle Data Collection and Event Data
Recorders 7-10
Vehicle Identification
Number (VIN) 5-82
Service Parts Identification Label 5-82
Vehicle Personalization
DIC 3-55
Memory Seat 2-52
Vehicle Storage 5-37
Ventilation Adjustment 3-22
Visors 2-11

W

Warning Lights, Gages and Indicators 3-23
Warnings
DIC Warnings and Messages 3-48
Hazard Warning Flashers 3-3
Other Warning Devices 3-4
Safety and Symbols iii
Vehicle Damage iv
Washing Your Vehicle 5-77
Weight of the Trailer 4-41
Weight of the Trailer Tongue 4-42
What Kind of Engine Oil to Use 5-14
What to Add 5-34
What to Do with Used Oil 5-17
What to Use 5-24, 5-31, 5-43
Wheels
Alignment and Tire Balance 5-63
Replacement 5-63

When to Add Engine Oil 5-14
When to Change Engine Oil (GM Oil Life System) 5-16
When to Check 5-59
When to Check and Change Lubricant 5-43
When to Check and Change the Automatic Transmission Fluid 5-20
When to Check Power Steering Fluid 5-31
When to Inspect the Engine Air Cleaner/Filter 5-19
When You Are Ready to Leave After Parking on a Hill 4-51
Why Safety Belts Work 1-8
Windows 2-9
Power 2-10
Windshield Washer Fluid 5-31
Windshield Wiper Blade Replacement 5-49
Fuses 5-83
Windshield Wipers 3-7
Winter Driving 4-26
Winter Tires 5-52

Y

Your Vehicle and the Environment 6-2