DODGE

JOURNEY

2012

copy
klet
t:

USER
GUIDE

Downloaded from www.Manualslib.com manuals search engine

DODGE.COM

This guide has been prepared to help you get quickly acquainted with your new Dodge and to provide a convenient reference source for common questions. However, it is not a substitute for your Owner's Manual.

For complete operational instructions, maintenance procedures and important safety messages, please consult your Owner's Manual, Navigation/Media Center Manuals, Multimedia User Manual and other Warning Labels in your vehicle.

Not all features shown in this guide may apply to your vehicle. For additional information on accessories to help personalize your vehicle, visit www.mopar.com or your local Dodge dealer.

DRIVING AND ALCOHOL

Drunken driving is one of the most frequent causes of accidents. Your driving ability can be seriously impaired with blood alcohol levels far below the legal minimum. If you are drinking, don't drive. Ride with a designated non-drinking driver, call a cab, a friend, or use public transportation.

WARNING!

Driving after drinking can lead to an accident. Your perceptions are less sharp, your reflexes are slower, and your judgment is impaired when you have been drinking. Never drink and then drive.

Downloaded from www.Manualslib.com manuals search engine

TABLE OF CONTENTS

INTRODUCTION/WELCOME
Welcome From Chrysler Group LLC 2

CONTROLS AT A GLANCE
Driver Cockpit 4
Instrument Cluster 6

GETTING STARTED
Key Fob 8
Remote Start 8
Keyless Enter-N-Go 9
Theft Alarm 12
Seat Belt 12
Supplemental Restraint System (SRS) — Air Bags 13
Child Restraints 14
Front Seats 17
Rear Seats 20
Heated Seats 22
Tilt / Telescoping Steering Column 24

OPERATING YOUR VEHICLE
Engine Break-In Recommendations . . . 25
Turn Signal/Wiper/Washer/High Beam Lever 25
Headlight Switch 26
Speed Control 27
Climate Control 28
Parkview® Rear Back-Up Camera 31
Power Sunroof 31
Wind Buffeting 33

ELECTRONICS
Your Vehicle's Sound System 34
Identifying Your Radio 36
Uconnect Touch™ 4.3 & 4.3S At A Glance 37
Uconnect Touch™ 8.4 & 8.4N At A Glance 38
Radio 40
Sirius Satellite Radio 41
iPod®/CD/AUX Controls 44
Garmin® Navigation (8.4N Only) 46
Sirius Travel Link (8.4N Only) 49
Playing iPod/USB/MP3 Devices 50
Uconnect™ Phone (Bluetooth® Hands Free Calling) 51
Uconnect™ Voice Command (8.4 & 8.4N Only) 56
Video Entertainment System (VES)™ . . 58
Electronic Vehicle Information Center (EVIC) 59
Programmable Features 60
Universal Garage Door Opener (HomeLink®) 61
Power Inverter 63
Power Outlet 64

UTILITY
Trailer Towing Weights (Maximum Trailer Weight Ratings) 66
Recreational Towing (Behind Motorhome, Etc.) 67

WHAT TO DO IN EMERGENCIES
24-Hour Towing Assistance 68
Instrument Cluster Warning Lights . . . 68
If Your Engine Overheats 72
Jacking And Tire Changing 73
Jump-Starting 80
Shift Lever Override 82
Towing A Disabled Vehicle 83
Freeing A Stuck Vehicle 84
Event Data Recorder (EDR) 85

MAINTAINING YOUR VEHICLE
Opening The Hood 86
Engine Compartment 87
Fluids And Capacities 89
Maintenance Chart 91
Fuses 93
Tire Pressures 95
Wheel And Wheel Trim Care 96
Exterior Bulbs 97

CONSUMER ASSISTANCE
Chrysler Group LLC Customer Center . . 98
Chrysler Canada Inc. Customer Center . 98
Assistance For The Hearing Impaired . . 98
Publications Ordering 98
Reporting Safety Defects In The 50 United States And Washington, D.C. 99

MOPAR ACCESSORIES
Authentic Accessories By MOPAR® . . 100

INDEX 101

FAQ (How To?)
Frequently Asked Questions 104

Downloaded from www.Manualslib.com manuals search engine

WELCOME FROM CHRYSLER GROUP LLC

Congratulations on selecting your new Chrysler Group LLC vehicle. Be assured that it represents precision workmanship, distinctive styling, and high quality - all essentials that are traditional to our vehicles.

Your new Chrysler Group LLC vehicle has characteristics to enhance the driver's control under some driving conditions. These are to assist the driver and are never a substitute for attentive driving. They can never take the driver's place. Always drive carefully.

Your new vehicle has many features for the comfort and convenience of you and your passengers. Some of these should not be used when driving because they take your eyes from the road or your attention from driving. Never text while driving or take your eyes more than momentarily off the road.

This guide illustrates and describes the operation of features and equipment that are either standard or optional on this vehicle. This guide may also include a description of features and equipment that are no longer available or were not ordered on this vehicle. Please disregard any features and equipment described in this guide that are not available on this vehicle. Chrysler Group LLC reserves the right to make changes in design and specifications and/or make additions to or improvements to its products without imposing any obligation upon itself to install them on products previously manufactured.

This User Guide has been prepared to help you quickly become acquainted with the important features of your vehicle. It contains most things you will need to operate and maintain the vehicle, including emergency information.

The DVD includes a computer application containing detailed owner's information which can be viewed on a personal computer or MAC computer. The multimedia DVD also includes videos which can be played on any standard DVD player (including the Media Center Touch-Screen Radios). Additional DVD operational information is located on the back of the DVD sleeve.

For complete owner information, refer to your Owner's Manual on the DVD in the owner’s kit provided at the time of new vehicle purchase. For your convenience, the information contained on the DVD may also be printed and saved for future reference.

Chrysler Group LLC is committed to protecting our environment and natural resources. By converting from paper to electronic delivery for the majority of the user information for your vehicle, together we greatly reduce the demand for tree-based products and lessen the stress on our environment.

Vehicles Sold In Canada

With respect to any vehicles sold in Canada, the name Chrysler Group LLC shall be deemed to be deleted and the name Chrysler Canada Inc. used in substitution therefore.

Downloaded from www.Manualslib.com manuals search engine

WARNING!

- Pedals that cannot move freely can cause loss of vehicle control and increase the risk of serious personal injury.
- Always make sure that objects cannot fall into the driver foot well while the vehicle is moving. Objects can become trapped under the brake pedal and accelerator pedal causing a loss of vehicle control.
- Failure to properly follow floor mat installation or mounting can cause interference with the brake pedal and accelerator pedal operation causing loss of control of the vehicle.
- Never use the 'PARK' position as a substitute for the parking brake. Always apply the parking brake fully when parked to guard against vehicle movement and possible injury or damage.
- Refer to your Owner's Manual on the DVD for further details.

USE OF AFTERMARKET PRODUCTS (ELECTRONICS)

The use of aftermarket devices including cell phones, MP3 players, GPS systems, or chargers may affect the performance of on-board wireless features including Keyless Enter-N-Go and Remote Start range. If you are experiencing difficulties with any of your wireless features, try disconnecting your aftermarket devices to see if the situation improves. If your symptoms persist, please see an authorized dealer.

CHRYSLER, DODGE, JEEP, RAM TRUCK, ATF+4, MOPAR and Uconnect are registered trademarks of Chrysler Group LLC.

COPYRIGHT ©2011 CHRYSLER GROUP LLC

Downloaded from www.Manualslib.com manuals search engine

CONTROLS AT A GLANCE

DRIVER COCKPIT

Downloaded from www.Manualslib.com manuals search engine

CONTROLS AT A GLANCE

A. Headlight Switch pg. 26

B. Turn Signal/Wiper/Washer/High Beams Lever pg. 25

C. Electronic Vehicle Information Center (EVIC) Controls pg. 59

D. Instrument Cluster pg. 6

E. Electronic Vehicle Information Center (EVIC) Display pg. 59

F. Engine Start/Stop Button (behind steering wheel) pg. 10

G. Uconnect Touch™ System pg. 34

H. SWITCH PANEL

- Hazard Switch
- A/C pg. 28
- Recirculation pg. 28
- Front Defrost pg. 28
- Rear Defrost pg. 28
- Electronic Stability Control (ESC) Off pg. 68

I. Climate Control Hard Knobs pg. 28

J. Power Outlet pg. 64

K. Transmission Shift Lever

L. Speed Control pg. 27

M. Power Mirrors

N. Power Windows

O. Power Door Locks

Downloaded from www.Manualslib.com manuals search engine

INSTRUMENT CLUSTER

Warning Lights

- Low Fuel Warning Light
- Charging System Light**
- Oil Pressure Warning Light
- Anti-Lock Brake (ABS) Light**
- Air Bag Warning Light**
- Electronic Throttle Control (ETC) Light
- Tire Pressure Monitoring System (TPMS) Light
- Engine Temperature Warning Light
- Seat Belt Reminder Light
- BRAKE - Brake Warning Light**
- Malfunction Indicator Light (MIL)**
- Electronic Stability Control (ESC) Activation/Malfunction Indicator Light**

(See page 68 for more information.)

Downloaded from www.Manualslib.com manuals search engine

Indicators

- Turn Signal Indicators
- High Beam Indicator
- Front Fog Light Indicator
- Vehicle Security Indicator*
- Electronic Stability Control (ESC) Off Indicator
- Electronic Speed Control ON Indicator
- Electronic Speed Control SET Indicator

* If equipped
** Bulb Check with Key On

Downloaded from www.Manualslib.com manuals search engine

KEY FOB

Locking And Unlocking The Doors/Liftgate

- Press the LOCK button once to lock all the doors and the liftgate. Press the UNLOCK button once to unlock the driver's door only and twice within five seconds to unlock all the doors and liftgate.
- All doors can be programmed to unlock on the first press of the UNLOCK button. Refer to Programmable Features in this guide.

Panic Alarm

- Press the PANIC button once to turn the panic alarm on.
- Wait approximately three seconds and press the button a second time to turn the panic alarm off.

Emergency Key

- Should the battery in the vehicle or the Key Fob transmitter go dead, there is an emergency key located in the Key Fob. To remove the emergency key, slide the button at the back of the Key Fob sideways with your thumb and then pull the key out with your other hand.

WARNING!

- Leaving unattended children in a vehicle is dangerous for a number of reasons. A child or others could be severely injured or killed. Children should be warned not to touch the parking brake, brake pedal, or the shift lever. Do not leave the Key Fob in the ignition. A child could operate power windows, other controls, or move the vehicle.

REMOTE START

- Press the REMOTE START button twice within five seconds. Pressing the REMOTE START button a third time shuts the engine off.
- To drive the vehicle, press the UNLOCK button and cycle the ignition to the ON/RUN position.
- With remote start, the engine will only run for 15 minutes (timeout) unless the ignition is cycled to the ON/RUN position.
- The vehicle must be cycled to the ON/RUN position after two consecutive timeouts.

Downloaded from www.Manualslib.com manuals search engine

WARNING!

- Do not start or run an engine in a closed garage or confined area. Exhaust gas contains Carbon Monoxide (CO) which is odorless and colorless. Carbon Monoxide is poisonous and can cause you or others to be severely injured or killed when inhaled.
- Keep Key Fob transmitters away from children. Operation of the Remote Start System, windows, door locks or other controls could cause you and others to be severely injured or killed.

KEYLESS ENTER-N-GO

- The Keyless Enter-N-Go system is an enhancement to the vehicle's Key Fob. This feature allows you to lock and unlock the vehicle's door(s) and liftgate without having to press the Key Fob lock or unlock buttons, as well as starting and stopping the vehicle with the press of a button.

To Unlock From The Driver or Passenger Side:

- With a valid Keyless Enter-N-Go Key Fob located outside the vehicle and within 5 ft (1.5m) of the driver or passenger side door handle, grab either front door handle to unlock the door automatically.

To Lock the Vehicle:

- Both front door handles have LOCK buttons located on the outside of the handle. With one of the vehicle's Keyless Enter-N-Go Key Fobs located outside the vehicle and within 5 ft (1.5m) of the driver's or passenger front door handle, press the door handle LOCK button to lock all four doors and liftgate.

NOTE:

- If “Unlock All Doors 1st Press” is programmed all doors will unlock when you grab hold of the front driver's door handle. To select between “Unlock Driver Door 1st Press” and “Unlock All Doors 1st Press”, refer to the Uconnect Touch™ Settings in your vehicle's Owner's Manual on the DVD or Programmable Features in this guide for further information.
- If “Unlock All Doors 1st Press” is programmed all doors and liftgate will unlock when you press the liftgate button. If “Unlock Driver Door 1st Press” is programmed only the liftgate will unlock when you press the liftgate button. To select between “Unlock Driver Door 1st Press” and “Unlock All Doors 1st Press”, refer to the Uconnect Touch™ Settings in your vehicle's Owner's Manual on the DVD or Programmable Features in this guide for further information.

Downloaded from www.Manualslib.com manuals search engine

- If a Key Fob is detected in the vehicle when locking the vehicle using the power door lock switch, the doors and liftgate will unlock and the horn will chirp three times. On the third attempt, your Key Fob can be locked inside the vehicle.
- After pressing the Keyless Enter-N-Go LOCK button, you must wait 2 seconds before you can lock or unlock the vehicle using the door handle.
- If a Keyless Enter-N-Go door handle has not been used for 72 hours, the Keyless Enter-N-Go feature for that handle may time out. Pulling the deactivated front door handle will reactivate the door handle's Keyless Enter-N-Go feature.

Lock or Unlock the Liftgate:

- With a valid Keyless Enter-N-Go Key Fob within 3 ft (1.0m) of the liftgate, press the button located to the left of the liftgate handle to unlock the liftgate. Press the button a second time to lock the liftgate.

NOTE:
- Refer to your Owner's Manual on the DVD for further information.

Engine Starting/Stopping

Starting

- With a valid Keyless Enter-N-Go Key Fob inside the vehicle.
- Place the shift lever in PARK or NEUTRAL.
- While pressing the brake pedal, press the ENGINE START/STOP button once. If the engine fails to start, the starter will disengage automatically after 10 seconds.

- To stop the cranking of the engine prior to the engine starting, press the button again.

NOTE: In case the ignition switch does not change with the push of a button, the RKE transmitter (Key Fob) may have a low or dead battery. In this situation a back up method can be used to operate the ignition switch. Put the nose side of the Key Fob against the ENGINE START/STOP button and push to operate the ignition switch.

Downloaded from www.Manualslib.com manuals search engine

Stopping

- Place the shift lever in PARK.
- Press the ENGINE START/STOP button once. The ignition switch will return to the OFF position.
- **If the shift lever is not in PARK, the ENGINE START/STOP button must be held for two seconds and vehicle speed must be above 5 mph (8 km/h) before the engine will shut off.**

Accessory Positions with Engine Off

NOTE: The following functions are with the driver's foot OFF the Brake Pedal (Transmission in PARK or NEUTRAL Position).

Starting With The Ignition Switch In The OFF Position:

- Press the ENGINE START/STOP button once to change the ignition switch to the ACC position.
- Press the ENGINE START/STOP button a second time to change the ignition switch to the ON/RUN position.
- Press the ENGINE START/STOP button a third time to return the ignition switch to the OFF position.

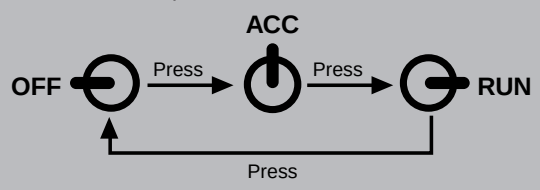

NOTE:

- If the ignition switch is left in the ACC or ON/RUN (engine not running) position and the transmission is in PARK, the system will automatically time out after 30 minutes of inactivity and the ignition will switch to the OFF position.
- In case the ignition switch does not change with the push of a button, the RKE transmitter (Key Fob) may have a low or dead battery. In this situation a back up method can be used to operate the ignition switch. Put the nose side (side opposite of the emergency key) of the Key Fob against the ENGINE START/STOP button and push to operate the ignition switch.

Downloaded from www.Manualslib.com manuals search engine

THEFT ALARM

To Arm

- Press the Keyless Enter-N-Go Start/Stop button until the Electronic Vehicle Information Center (EVIC) indicates that the vehicle ignition is “OFF”. Press the power door lock switch while the door is open, press the Key Fob LOCK button, or with one of the Key Fobs located outside the vehicle and within 5 ft (1.5m) of the driver's and passenger front door handles, press the Keyless Enter-N-Go LOCK button located on the door handle.

NOTE: After pressing the Keyless Enter-N-Go LOCK button, you must wait 2 seconds before you can lock or unlock the vehicle via the door handle.

To Disarm

- Press the Key Fob UNLOCK button or with one of the Key Fobs located outside the vehicle and within 5 ft (1.5m) of the driver's and passenger front door handles, grab the Keyless Enter-N-Go door handle and enter the vehicle, then press the Keyless Enter-N-Go Start/Stop button (requires at least one valid Key Fob in the vehicle).

SEAT BELT

- Be sure everyone in your vehicle is in a seat and using a seat belt properly.
- Position the lap belt across your thighs, below your abdomen. To remove slack in the lap portion, pull up a bit on the shoulder belt. To loosen the lap belt if it is too tight, tilt the latch plate and pull on the lap belt. A snug belt reduces the risk of sliding under the belt in a collision.
- Position the shoulder belt on your chest so that it is comfortable and not resting on your neck. The retractor will withdraw any slack in the belt.
- A shoulder belt placed behind you will not protect you from injury during a collision. You are more likely to hit your head in a collision if you do not wear your shoulder belt. The lap and shoulder belt are meant to be used together.
- A belt that is too loose will not protect you properly. In a sudden stop you could move too far forward, increasing the possibility of injury. Wear your seat belt snugly.
- A frayed or torn belt could rip apart in a collision and leave you with no protection. Inspect the belt system periodically, checking for cuts, frays, or loose parts. Damaged parts must be replaced immediately. Do not disassemble or modify the system. Seat belt assemblies must be replaced after a collision if they have been damaged (bent retractor, torn webbing, etc.).
- The seat belts for both front seating positions are equipped with pretensioning devices that are designed to remove slack from the seat belt in the event of a collision.
- A deployed pretensioner or a deployed air bag must be replaced immediately.

Downloaded from www.Manualslib.com manuals search engine

WARNING!

In a collision, you and your passengers can suffer much greater injuries if you are not buckled up properly. You can strike the interior of your vehicle or other passengers, or you can be thrown out of the vehicle. Always be sure you and others in your vehicle are buckled up properly.

SUPPLEMENTAL RESTRAINT SYSTEM (SRS) — AIR BAGS

- This vehicle has Advanced Front Air Bags for both the driver and right front passenger as a supplement to the seat belt restraint system. The Advanced Front Air Bags will not deploy in every type of collision.
- Advanced Front Air Bags are designed to provide additional protection by supplementing the seat belts in certain frontal collisions depending on the severity and type of collision. Advanced Front Air Bags are not expected to reduce the risk of injury in rear, side, or rollover collisions.
- This vehicle is equipped with Supplemental Side Air Bag Inflatable Curtains to protect the driver, front and rear passengers sitting next to a window.
- This vehicle is equipped with Supplemental Seat-Mounted Side Air Bags to provide enhanced protection to help protect an occupant during a side impact.
- This vehicle is equipped with a Supplemental Driver Side Knee Air Bag to provide enhanced protection and work together with the Driver Advanced Front Air Bag during a frontal impact.
- If the Air Bag Warning Light is not on during starting, stays on, or turns on while driving, have the vehicle serviced by an authorized service center immediately.
- Refer to the Owner's Manual on the DVD for further details regarding the Supplemental Restraint System (SRS).

WARNING!

- Relying on the air bags alone could lead to more severe injuries in a collision. The air bags work with your seat belt to restrain you properly. In some collisions, the air bags won't deploy at all. Always wear your seat belts even though you have air bags.
- Being too close to the steering wheel or instrument panel during Advanced Front Air Bag deployment could cause serious injury, including death. Air bags need room to inflate. Sit back, comfortably extending your arms to reach the steering wheel or instrument panel.
- Supplemental Side Air Bag Inflatable Curtains and Supplemental Seat-Mounted Side Air Bags need room to inflate. Do not lean against the door or window. Sit upright in the center of the seat.

(Continued)

Downloaded from www.Manualslib.com manuals search engine

WARNING! ***(Continued)***

- Being too close to the Supplemental Side Air Bag Inflatable Curtain and/or Seat-Mounted Side Air Bag during deployment could cause you to be severely injured or killed.
- Do not drive your vehicle after the air bags have deployed. If you are involved in another collision, the air bags will not be in place to protect you.
- After any collision, the vehicle should be taken to an authorized dealer immediately.

CHILD RESTRAINTS

- Children 12 years and under should ride properly buckled up in a rear seat, if available. According to crash statistics, children are safer when properly restrained in the rear seats rather than in the front.
- Every state in the United States and all Canadian provinces require that small children ride in proper restraint systems. This is the law, and you can be prosecuted for ignoring it.

Integrated Child Booster Seat

- The Integrated Child Booster Seat, located in each outboard second-row passenger seat, is designed for children weighing between 48 and 85 lbs (22 and 39 kg) and between 47 in (119 cm) and 57 in (145 cm) tall.
- To position a child into the Integrated Child Booster Seat follow these steps:
  - Slide the second row seat to the full rear position to use the Integrated Child Booster Seat.

NOTE: The second row bench with Integrated Child Booster Seat must remain in the full rear position during use.

- Pull the release loop forward to release the latch and seat cushion.

- Lift the seat cushion up and push back to lock it in the booster seat position.

Downloaded from www.Manualslib.com manuals search engine

- Place the child upright in the seat with their back firmly against the seatback.
- Grasp the latch plate and pull out the seat belt.
- Slide the latch plate up the webbing as far as necessary to allow the seat belt to go around the child's lap.

NOTE: The lap portion of the seat belt should be low on the hips and as snug as possible.

- Once the seat belt is long enough to fit properly, insert the latch plate into the buckle until you hear a "click."
- To remove the slack from the lap belt, pull upward on the shoulder portion of the seat belt.

Installing The LATCH - Compatible Child Restraint System

- Your vehicle's second row passenger seats are equipped with the child restraint anchorage system called LATCH, which stands for Lower Anchors and Tether for CHildren.
- All three second-row passenger seating positions have lower anchors that are capable of accommodating LATCH-compatible child seats.
- Rigid fixed lower attachments can only be used in the outboard seating positions. Flexible lower attachments can be used in all seating positions.
- When installing a child seat in the center seating position use one lower anchorage from the outboard seating position and the center seat dedicated lower anchorage. If two child seats are installed in adjacent seating positions you must use the vehicle seat belt in the center seating position.
- You should **NEVER** install LATCH-compatible child seats so that two seats share a common lower anchorage.

Installing The Lower Attachments:

- The vehicle lower anchorages are round bars located at the rear of the seat cushion where it meets the seatback.

Downloaded from www.Manualslib.com manuals search engine

- Loosen the child seat adjusters on the lower straps and on the tether strap so that you can more easily attach the hooks or connectors to the vehicle anchors.
- Attach the lower hooks or connectors over the top of the seatcover material.
- Tighten all three straps as you push the child restraint rearward and downward into the seat, removing slack in the straps according to the child restraint manufacturer's instructions.

Installing The Top Tether Strap (With Either Lower Anchors Or Vehicle Seat Belt):

- Attach the tether strap to the anchor directly behind the seat where you are placing the child restraint, being careful to route the tether strap to provide the most direct path between the anchor and the child restraint, preferably between the head restraint posts underneath the head restraint.

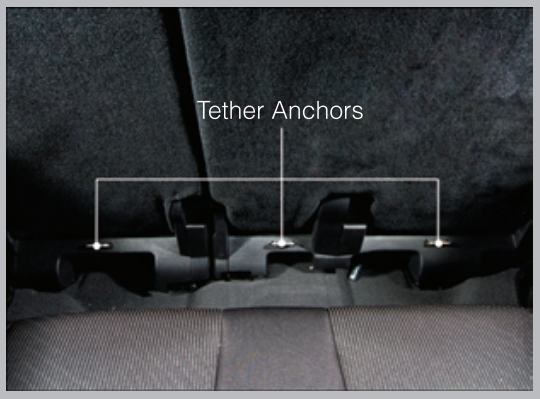

- Remove all slack and tighten tether strap according to child restraint manufacturer's instructions.

NOTE: Ensure that the tether strap does not slip into the opening between the seatbacks as you remove slack in the strap.

Installing The Child Restraint Using The Vehicle Seat Belts

- To install a child restraint, first, pull enough of the seat belt webbing from the retractor to route it through the belt path of the child restraint and slide the latch plate into the buckle.
- Next, extract all the seat belt webbing out of the retractor and then allow the belt to retract into the retractor. Finally, pull on any excess webbing to tighten the lap portion around the child restraint. Any seat belt system will loosen with time, so check the belt occasionally, and pull it tight if necessary.
- Route the tether strap to provide the most direct path for the strap between the anchor and the child seat, preferably between the head restraint posts underneath the head restraint.
- Attach the tether strap hook of the child restraint to the tether anchor and remove slack in the tether strap according to the child restraint manufacturer's instructions.

Downloaded from www.Manualslib.com manuals search engine

NOTE: Ensure that the tether strap does not slip into the opening between the seatbacks as you remove slack in the strap.

WARNING!

- In a collision, an unrestrained child, even a tiny baby, can become a projectile inside the vehicle. The force required to hold even an infant on your lap could become so great that you could not hold the child, no matter how strong you are. The child and others could be severely injured or killed. Any child riding in your vehicle should be in a proper restraint for the child's size.
- Rearward-facing child seats must never be used in the front seat of a vehicle with a front passenger air bag. An air bag deployment could cause severe injury or death to infants in this position.
- Improper installation of a child restraint to the LATCH anchorages can lead to failure of an infant or child restraint. The child could be severely injured or killed. Follow the manufacturer's directions exactly when installing an infant or child restraint.
- An incorrectly anchored tether strap could lead to increased head motion and possible injury to the child. Use only the anchor positions directly behind the child seat to secure a child restraint top tether strap.

FRONT SEATS

Power Seats

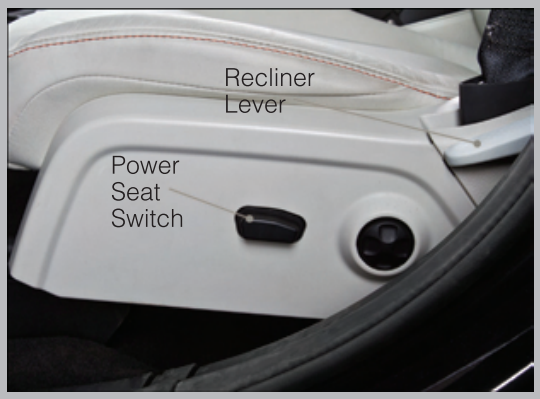

- The power seat switch, located on the outboard side of the seat near the floor, controls forward/back, up/down, and tilt adjustment.

Downloaded from www.Manualslib.com manuals search engine

Power Lumbar

- Push the switch forward to increase the lumbar support. Push the switch rearward to decrease the lumbar support.
- Pushing upward or downward on the switch will raise and lower the position of the support.

Manual Seat Adjustment

Forward/Rearward

- Lift up on the adjusting bar located at the front of the seat near the floor and release at the desired position.

Recliner

- Lift the rear lever located on the outboard side of the seat, lean back and release when seat is in desired position.

Fold-Flat Front Passenger Seat

- The front passenger seat can be folded flat to allow for extended cargo space. Pull up on the seatback release lever to fold down the seatback.

Downloaded from www.Manualslib.com manuals search engine

Flip 'n Stow™ Front Passenger Seat Storage

- The seat latch release-loop is located in the center of the seat cushion between the seat cushion and the seatback. Pull the loop upward to release the latch and then forward to open the seat to the detent position.

NOTE: Make sure that objects inside the bin do not interfere with the latch before closing the seat. Push the seat cushion downward after closing it to make sure it latches to the base.

CAUTION!

DO NOT place any article under a power seat or impede its ability to move as it may cause damage to the seat controls. Seat travel may become limited if movement is stopped by an obstruction in the seat's path.

WARNING!

- Adjusting a seat while the vehicle is moving is dangerous. The sudden movement of the seat could cause you to lose control. The seat belt might not be properly adjusted, and you could be severely injured or killed. Only adjust a seat while the vehicle is parked.
- Do not ride with the seatback reclined so that the seat belt is no longer resting against your chest. In a collision, you could slide under the seat belt and be severely injured or killed. Use the recliner only when the vehicle is parked.
- Be certain that the seat cushion is locked securely into position before using the seat. Otherwise, the seat will not provide the proper stability for passengers. An improperly latched seat cushion could cause serious injury.

Downloaded from www.Manualslib.com manuals search engine

REAR SEATS

60/40 Split Second-Row Passenger Seats

To Lower The Seatback

- Locate the seatback release lever on the lower outboard side of the seat.
- Place one hand on the seatback and apply a gentle pressure.
- Lift the seatback release lever with the other hand, allowing the seatback to move forward slightly, and then release the lever.
- Gently guide the seatback into the folded position.

To Raise The Seatback

- Raise the seatback and lock it in place.

Forward And Rearward Adjustment

- The control lever is on the outboard side of the seat. Lift the lever to move the seat forward or rearward. Release the lever once the seat is in the position desired.

Recliner Adjustment

- The seatback release lever is on the outboard side of the seat. To recline the seat, lean back, lift the lever, position the seatback as desired, and then release the lever. To return the seatback to its normal upright position, lean back, lift the lever, lean forward, and then release the lever once the seatback is in the upright position.

Downloaded from www.Manualslib.com manuals search engine

Stadium Tip 'n Slide™ (Easy Entry/Exit Seat) — Seven Passenger Models

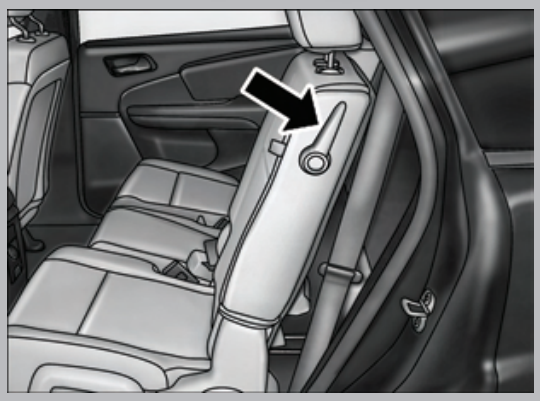

To Move The Second-Row Passenger Seat Forward

NOTE: Raise the 20% seatback/armrest before moving the 60% seat to allow for full seat travel.

- To allow passengers to easily enter or exit the third-row passenger seats move the Tip 'n Slide™ control lever on the upper outboard side of the seatback forward, and in one fluid motion, the seat cushion flips upward and the seat moves forward on its tracks.

To Unfold And Move The Second-Row Passenger Seat Rearward

- Move the seatback rearward until it locks in place and then continue sliding the seat rearward on its tracks until it locks in place.
- Push the seat cushion downward to lock it in place.
- Adjust the seat track position as desired.

50/50 Split Third-Row Passenger Seats With Fold-Flat Feature

To Fold The Seat

- With the second-row passenger seat fully upright, pull the latch release-loop located at the top of the seatback upward, push the seat forward slightly, and release the release-loop. Then, continue to push the seat forward. The head restraints will fold automatically as the seat moves forward.

To Unfold The Seat

- Grasp the assist strap loop on the seatback and pull it toward you to raise the seatback. Continue to raise the seatback until it locks in place. Then, raise the head restraint to lock it in place.
- To lock the seatback in a reclined position, pull the latch release-loop located at the top of the seatback upward, allow the seatback to recline, then release the release-loop.

Downloaded from www.Manualslib.com manuals search engine

WARNING!

- Be certain that the seatback is locked securely into position. Otherwise, the seat will not provide the proper stability for child seats and/or passengers. An improperly latched seat could cause you and others to be severely injured or killed.
- Do not allow a passenger to sit in a third row seat without having the head restraint unfolded and locked in place or seatback(s) folded flat. Failure to follow this warning may result in the passengers being severely injured or killed in the event of a collision.
- Do not drive the vehicle with the seat in the Tip 'n Slide™ position, as it is only intended for entering and exiting the third row seats. Failure to follow this warning may result in you and others being severely injured or killed.
- Be certain that the seatback and seat are locked securely into position. Otherwise, the seat will not provide the proper stability for child seats and/or passengers. An improperly latched seat could cause you or others to be severely injured or killed.

HEATED SEATS

Front Heated Seats

- The heated seats are operated using the Uconnect Touch™ System.

Uconnect Touch™ 4.3

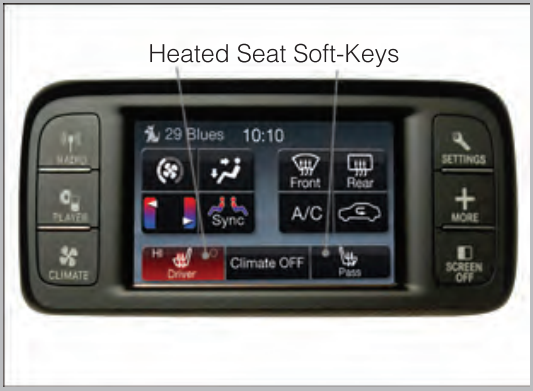

- Press the Climate hard-key (located on the left side of the Uconnect Touch™ screen) to enter the climate control screen.
- Press the Driver or Passenger seat soft-key once to select HI-level heating. Press the soft-key a second time to select LO-level heating. Press the soft-key a third time to shut the heating elements OFF.

- If the High-level setting is selected, the system will automatically switch to Low-level after approximately 60 minutes. The Low-level setting will turn Off automatically after approximately 45 minutes.

Downloaded from www.Manualslib.com manuals search engine

Uconnect Touch™ 8.4

- Press the Controls soft-key located on the Uconnect Touch™ screen.
- Press the Driver or Passenger seat soft-key once to select HI-level heating. Press the soft-key a second time to select LO-level heating. Press the soft-key a third time to shut the heating elements OFF.

- If the High-level setting is selected, the system will automatically switch to Low-level after approximately 60 minutes. The Low-level setting will turn Off automatically after approximately 45 minutes.

WARNING!

- Persons who are unable to feel pain to the skin because of advanced age, chronic illness, diabetes, spinal cord injury, medication, alcohol use, exhaustion or other physical conditions must exercise care when using the seat heater. It may cause burns even at low temperatures, especially if used for long periods of time.
- Do not place anything on the seat that insulates against heat, such as a blanket or cushion. This may cause the seat heater to overheat. Sitting in a seat that has been overheated could cause serious burns due to the increased surface temperature of the seat.

Downloaded from www.Manualslib.com manuals search engine

TILT / TELESCOPING STEERING COLUMN

- The tilt/telescoping control handle is located below the steering wheel at the end of the steering column.
- Push down on the handle to unlock the steering column.
- To tilt the steering column, move the steering wheel upward or downward as desired. To lengthen or shorten the steering column, pull the steering wheel outward or push it inward as desired.
- Pull upward on the handle to lock the column firmly in place.

WARNING!

Do not adjust the steering wheel while driving. The tilt/telescoping adjustment must be locked while driving. Adjusting the steering wheel while driving or driving without the tilt/telescoping adjustment locked could cause the driver to lose control of the vehicle. Failure to follow this warning may result in you and others being severely injured or killed.

Downloaded from www.Manualslib.com manuals search engine

ENGINE BREAK-IN RECOMMENDATIONS

- A long break-in period is not required for the engine and drivetrain (transmission and axle) in your vehicle.
- Drive moderately during the first 300 miles (500 km). After the initial 60 miles (100 km), speeds up to 50 or 55 mph (80 or 90 km/h) are desirable.
- While cruising, brief full-throttle acceleration within the limits of local traffic laws contributes to a good break-in. Wide-open throttle acceleration in low gear can be detrimental and should be avoided.
- The engine oil installed in the engine at the factory is a high-quality energy conserving type lubricant. Oil changes should be consistent with anticipated climate conditions under which vehicle operations will occur. For the recommended viscosity and quality grades, refer to "Maintaining Your Vehicle". NON-DETERGENT OR STRAIGHT MINERAL OILS MUST NEVER BE USED.
- A new engine may consume some oil during its first few thousand miles (kilometers) of operation. This should be considered a normal part of the break-in and not interpreted as an indication of difficulty.

TURN SIGNAL/WIPER/WASHER/HIGH BEAM LEVER

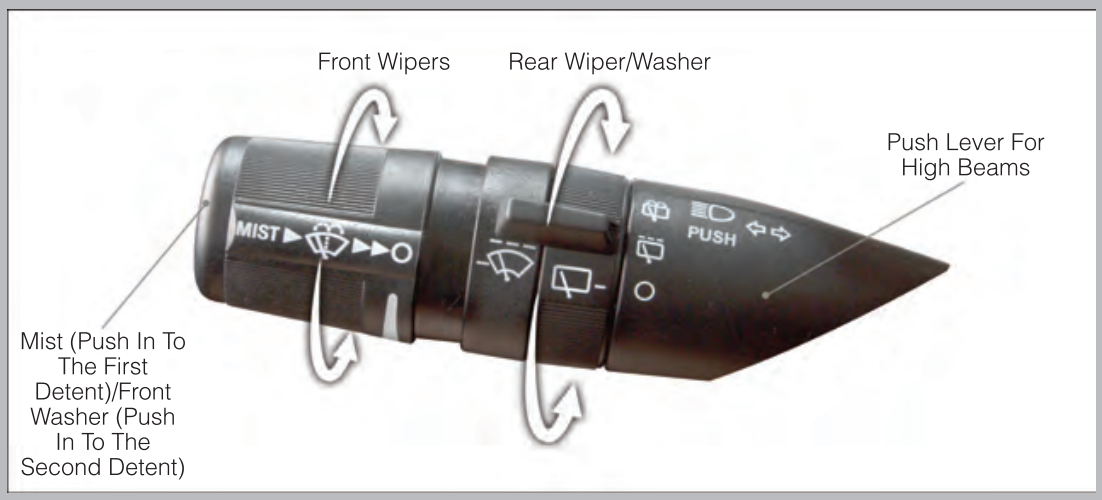

Turn Signal/Lane Change Assist

- Tap the lever up or down once and the turn signal (right or left) will flash three times and automatically turn off.

Front Wipers

Intermittent, Low And High Operation

- Rotate the end of the lever to the first detent position for one of five intermittent settings, the second detent for low wiper operation and the third detent for high wiper operation.

Washer Operation

- Push the end of the lever in to the second detent and release.

Downloaded from www.Manualslib.com manuals search engine

Mist

- Push the end of the lever in to the first detent and release.

NOTE: The mist feature does not activate the washer pump; therefore, no washer fluid will be sprayed on the windshield. The wash function must be used in order to spray the windshield with washer fluid.

Rear Wiper

Wiper Operation

- Rotate the center portion of the lever forward to the first detent for rear wiper operation.

Washer Operation

- Rotate the center portion of the lever past the first detent to activate the rear washer.

HEADLIGHT SWITCH

Automatic Headlights/Parking Lights/Headlights

- Rotate the headlight switch, located on the instrument panel to the left of the steering wheel, to the first detent for parking lights and to the second detent for headlights .
- With the parking lights or low beam headlights on, push the headlight switch once for fog lights.
- Rotate the headlight switch to “AUTO” for AUTO headlights.

- When set to AUTO, the system automatically turns the headlights on or off based on ambient light levels.

Instrument Panel Dimmer

- Rotate the dimmer control to the extreme bottom position to fully dim the instrument panel lights and prevent the interior lights from illuminating when a door is opened.
- Rotate the dimmer control up to increase the brightness of the instrument panel when the parking lights or headlights are on.
- Rotate the dimmer control up to the next detent position to fully brighten the odometer and radio when the parking lights or headlights are on. Refer to your Media Center/Radio User Manual on the DVD for display dimming.
- Rotate the dimmer control up to the last detent position to turn on the interior lighting.

Downloaded from www.Manualslib.com manuals search engine

Door/Map Pocket Lights

- Rotate the Door/Map Pocket control up or down to increase or decrease the brightness of the door handle and map pocket lighting when the parking lights or headlights are on.

SPEED CONTROL

- The speed control switches are located on the steering wheel.

Cruise ON/OFF

- Push the ON/OFF button to activate the Speed Control.
- CRUISE will appear on the instrument cluster to indicate the Speed Control is on.
- Push the ON/OFF button a second time to turn the system off.

Set

- With the Speed Control on, push and release the SET – button to set a desired speed.

Accel/Decel

- Once a speed is set, pushing the RES + button once or the SET – button once will increase or decrease the set speed approximately 1 mph (2 km/h).
- Push and hold the RES + button to accelerate in 5mph (8 km/h) increments or push and hold the SET – button to decelerate in 5mph (8 km/h) increments; release the button to save the new set speed.

Resume

- To resume a previously selected set speed in memory, push the RES + button and release.

Cancel

- Push the CANCEL button, or apply the brakes to cancel the set speed and maintain the set speed memory.
- Push the ON/OFF button to turn the system off and erase the set speed memory.

Downloaded from www.Manualslib.com manuals search engine

WARNING!

- Leaving the Electronic Speed Control system on when not in use is dangerous. You could accidentally set the system or cause it to go faster than you want. You could lose control and have a collision. Always leave the Electronic Speed Control system off when you are not using it.
- Electronic Speed Control can be dangerous where the system cannot maintain a constant speed. Your vehicle could go too fast for the conditions, and you could lose control. A collision could be the result. Do not use Electronic Speed Control in heavy traffic or on roads that are winding, icy, snow-covered or slippery.

CLIMATE CONTROL

Uconnect Touch™ 4.3 Manual Climate Controls

Downloaded from www.Manualslib.com manuals search engine

Uconnect Touch™ 8.4 Automatic Climate Controls

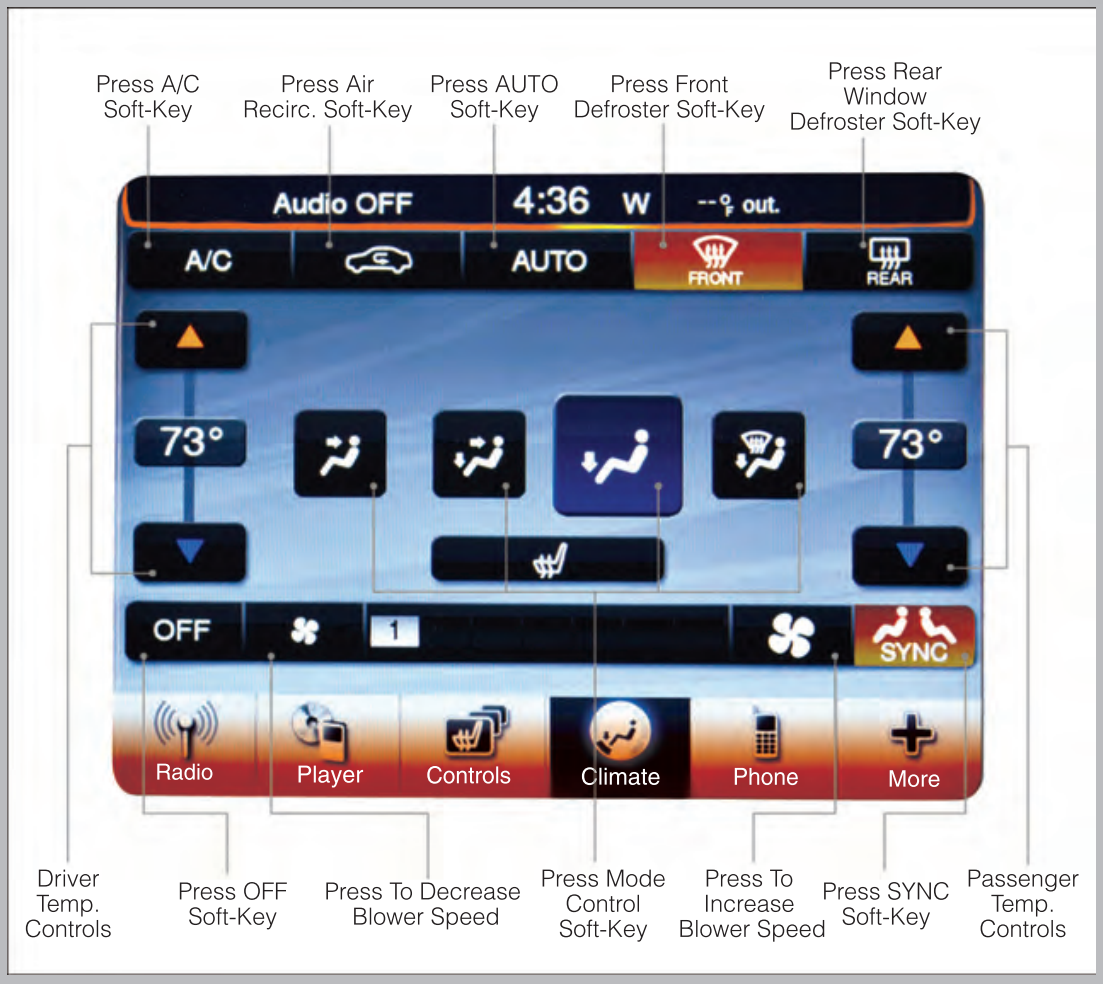

Downloaded from www.Manualslib.com manuals search engine

Climate Control Knobs

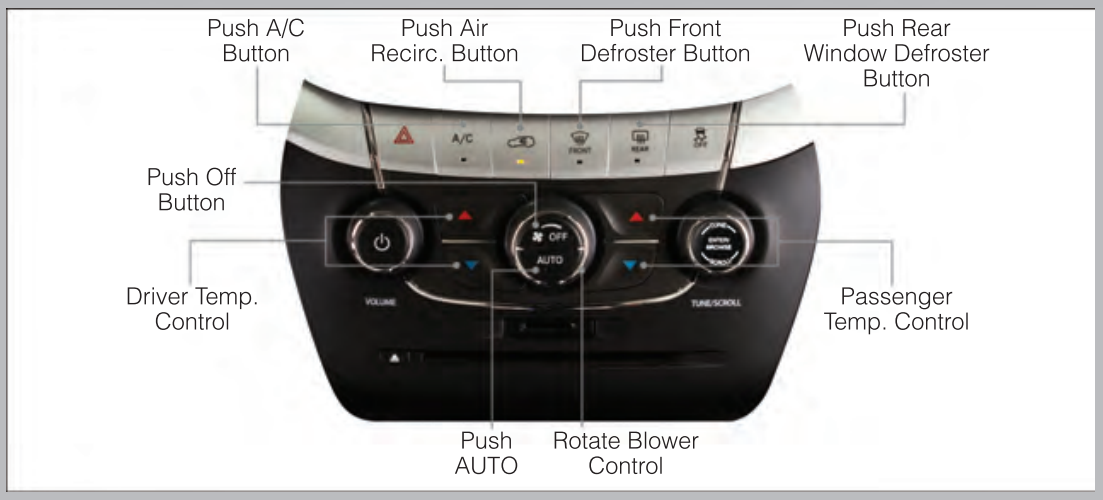

- For your convenience the climate controls can be operated by using the soft-keys located on the touch screen or the climate control knobs below the Uconnect Touch display.

Automatic Operation

- Press the AUTO button or AUTO soft-key.
- Select the desired temperature by pressing the Temperature Controls for the driver or passenger.
- The system will maintain the set temperature automatically.

SYNC Temperature Soft-Key

- Press the SYNC soft-key once to control driver and passenger temperatures simultaneously. Press the SYNC soft-key a second time to control the temperatures individually.

Air Recirculation

- Use recirculation for maximum A/C operation.
- For window defogging, turn the recirculation button off.
- If the Recirculation button is pushed while in the AUTO mode, the indicator light may flash three times to indicate the cabin air is being controlled automatically.

Downloaded from www.Manualslib.com manuals search engine

PARKVIEW® REAR BACK-UP CAMERA

- You can see an on-screen image of the rear of your vehicle whenever the shift lever is put into REVERSE. The ParkView® Rear Back-Up Camera image will be displayed on the radio display screen, located on the center stack of the instrument panel.
- If the radio display screen appears foggy, clean the camera lens located on the liftgate.

WARNING!

Drivers must be careful when backing up even when using the ParkView® Rear Back-Up Camera. Always check carefully behind your vehicle, and be sure to check for pedestrians, animals, other vehicles, obstructions, or blind spots before backing up. You must continue to pay attention while backing up. Failure to do so can result in serious injury or death.

POWER SUNROOF

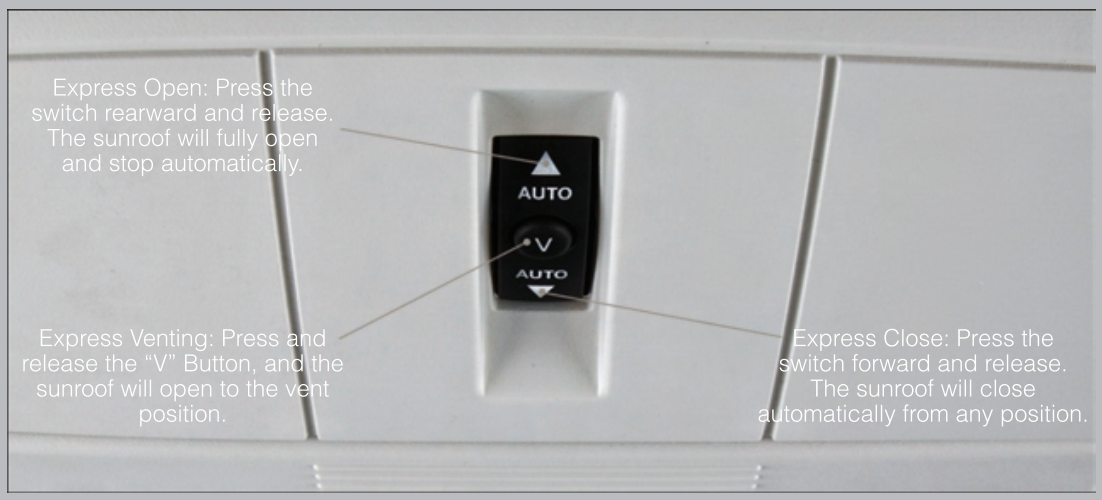

Manual Open/Close

- Press and hold the switch rearward to open or forward to close the sunroof. Any release of the switch will stop the movement, and the sunroof will remain in a partially open or closed position until the switch is pressed again.

Pinch Protection Feature

- This feature will detect an obstruction in the opening of the sunroof or the shade during Express Close operation. If an obstruction in the path of the sunroof or shade is detected, the sunroof or shade will automatically return to the open position.

NOTE: Pinch protection is disabled while the switch is pressed and held during manual opening and closing of the sunroof or shade.

Downloaded from www.Manualslib.com manuals search engine

WARNING!

- Never leave children in a vehicle with the key in the ignition switch. Occupants, particularly unattended children, can become entrapped by the power sunroof while operating the power sunroof switch. Such entrapment may result in serious injury or death.
- In a collision, there is a greater risk of being thrown from a vehicle with an open sunroof. You could also be severely injured or killed. Always fasten your seat belt properly and make sure all passengers are properly secured.
- Do not allow small children to operate the sunroof. Never allow your fingers, other body parts, or any object to project through the sunroof opening. Injury may result.

Downloaded from www.Manualslib.com manuals search engine

WIND BUFFETING

- Wind buffeting can be described as a helicopter-type percussion sound. If buffeting occurs with the rear windows open, adjust the front and rear windows together.
- If buffeting occurs with the sunroof open, adjust the sunroof opening, or adjust any window. This will minimize buffeting.

Downloaded from www.Manualslib.com manuals search engine

YOUR VEHICLE'S SOUND SYSTEM

Bluetooth Streaming Audio – allows you to control your Bluetooth device through the radio, steering wheel audio controls or voice commands. See Uconnect™ Phone in this section for more details. Also, Bluetooth device must be compatible. Refer to your Bluetooth device's manual to see if it supports A2DP+AVCRP 1.3 protocol.

Downloaded from www.Manualslib.com manuals search engine

Downloaded from www.Manualslib.com manuals search engine

IDENTIFYING YOUR RADIO

Uconnect Touch™ 4.3 & 4.3S

- Models 4.3 and 4.3S have a 4.3 inch touch screen with hard–keys to each side of it.
- Model 4.3S has all Model 4.3 features, plus SIRIUS® Satellite Radio (1 year trial subscription included).
- Model 4.3S is identified by the presence of SAT on the band button, indicating the presence of satellite radio.

Uconnect Touch™ 8.4 & 8.4N

- Models 8.4 and 8.4N have an 8.4 inch touch screen.
- Model 8.4N has all Model 8.4 features, plus Garmin® Navigation and SIRIUS® Travel Link (1-year trial subscription included).
- Model 8.4N is identified by the unique Nav button on the main screen menu bar, and the presence of Travel Link within the More menu.

Downloaded from www.Manualslib.com manuals search engine

UCONNECT TOUCH™ 4.3 & 4.3S AT A GLANCE

Displaying the Time

- If the time is not currently displayed at the top of the screen when in Radio mode, press the Settings button, then touch clock. Select Show Time, then touch On.

Setting the Time

- Press the Settings hard-key, then touch the Clock soft-key.
- Touch the Set the Time soft-key.
- Touch the up or down soft-keys to adjust the hours, minutes or AM/PM.

NOTE: 12hr format and 24hr format can also be set.

- Once the time is set press the "Done" soft-key to exit the time screen.

Audio Settings

- Press the SETTINGS hard-key on the right side of the unit.
- Then scroll down and press the Audio soft-key to get to the Audio menu.
- The Audio Menu shows the following options for you to customize your audio settings.
  - Equalizer
  - Balance/Fade
  - Speed Adjust Volume
- Touch the Exit soft-key to exit from the Audio Menu.

Downloaded from www.Manualslib.com manuals search engine

Equalizer

- Touch the Equalizer soft-key to adjust the Bass, Mid and Treble. Use the + or - soft-key to adjust the equalizer to your desired settings. Press the back arrow soft-key when done.

Balance/Fade

- Touch the Balance/Fade soft-key to adjust the sound from the speakers. Use the arrow soft-key to adjust the sound level from the front and rear or right and left side speakers. Touch the Center "C" soft-key to reset the balance and fade to the factory setting. Press the back arrow soft-key when done.

Speed Adjust Volume

- Touch the Speed Adjust Volume soft-key to select between OFF, 1, 2 or 3. This will decrease the radio volume relative to a decrease in vehicle speed. Press the back arrow soft-key when done.

UCONNECT TOUCH™ 8.4 & 8.4N AT A GLANCE

Displaying the Time

- If the time is not currently displayed on the radio or player main page, touch the More soft-key and then touch the Settings soft-key. In the Settings list, touch the Clock soft-key then touch the check box next to Show Time in Status Bar.

Downloaded from www.Manualslib.com manuals search engine

Setting the Time

- Model 8.4N synchronizes time automatically via GPS, so should not require any time adjustment. If you do need to set the time manually, follow the instructions below for Model 8.4.
- For Model 8.4, turn the unit on, then touch the time display at the top of the screen. Touch Yes.
- If the time is not displayed at the top of the screen, touch More soft-key and then Settings soft-key. In the Settings screen, touch the Clock soft-key, then check or uncheck this option.
- Touch + or – next to Set Time Hours and Set Time Minutes to adjust the time.
- If these features are not available, uncheck the Sync with GPS box.
- Touch X to save your settings and exit out of the Clock Setting screen.

Audio Settings

- Touch of the Audio soft-key to activate the Audio settings screen to adjust Balance\Fade, Equalizer, And Speed Adjusted Volume.
- You can return to the Radio screen by touching the X located at the top right.

Balance/Fade

- Touch the Balance/Fade soft-key to Balance audio between the front speakers or fade the audio between the rear and front speakers.
- Touching the Front, Rear, Left, or Right soft-keys or touch and drag the red Speaker Icon to adjust the Balance/Fade.

Equalizer

- Touch the Equalizer soft-key to activate the Equalizer screen.
- Touch the + or - soft-keys, or by touching and dragging over the level bar for each of the equalizer bands. The level value, which spans between ±9, is displayed at the bottom of each of the Bands.

Speed Adjusted Volume

- Touch the Speed Adjusted Volume soft-key to activate the Speed Adjusted Volume screen. The Speed Adjusted Volume is adjusted by touching of the + and - buttons or by touching, and dragging over the Level Bar This alters the automatic adjustment of the audio volume with variation to vehicle speed.

Downloaded from www.Manualslib.com manuals search engine

RADIO

Models 4.3 & 4.3S

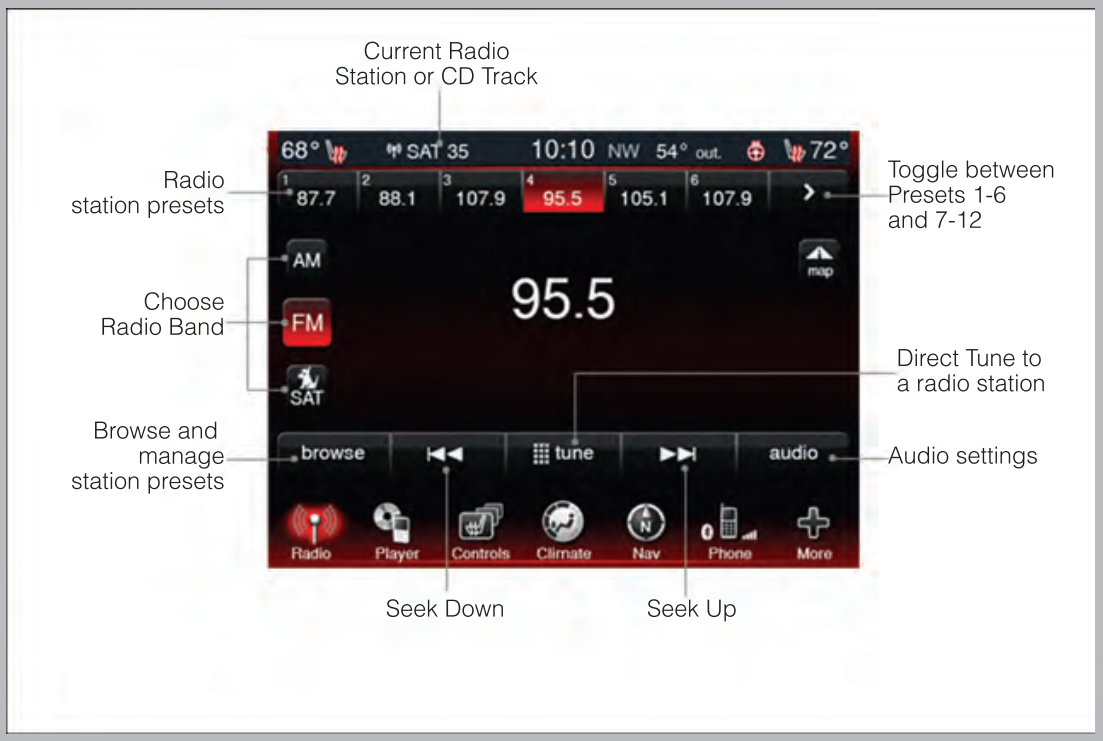

Models 8.4 & 8.4N

Downloaded from www.Manualslib.com manuals search engine

- To access the Radio mode, touch the Radio hard-key on the upper left side of the faceplate (4.3 & 4.3S) or the Radio soft-key at the lower left of the screen (8.4 & 8.4N).
- Unless otherwise noted, the information provided on the operation and functionality of the radios in this section is common to all Uconnect Touch™ radios.

Selecting Radio Stations

- Touch the Radio band soft-key to cycle through AM, FM or SAT (4.3 & 4.3S) or the desired radio band (AM, FM or SAT) soft-key (8.4 & 8.4N). Satellite Radio is not only available on the 4.3.

Seek Up/Seek Down

- Touch the Seek arrow soft-keys for less than 2 seconds to seek through radio stations.
- Touch and hold either arrow soft-key for more than 2 seconds to bypass stations without stopping. The radio will stop at the next listenable station once the arrow soft-key is released.

Direct Tune

- Tune directly to a radio station by pressing the “Tune” button on the screen, and entering the desired station number.

Store Radio Presets

- Your radio can store 12 total preset stations. They are shown at the top of your screen. To see all 12 stations, Press the all soft-key (4.3 & 4.3S) or press the arrow soft-key at the top right of the screen to toggle between the six presets (8.4 & 8.4N).
- To set a station into memory press and hold the desired numbered soft-key for more than two seconds or until you hear a confirmation beep.

SIRIUS SATELLITE RADIO

- SIRIUS® Satellite Radio gives you over 130 channels, including 100% commercial-free music from nearly every genre, plus all your favorite sports, news, talk and entertainment channels –all with crystal clear, coast-to-coast coverage, all in one place and all at your fingertips.
- To access SIRIUS Satellite Radio, touch the Radio band soft-key and select the SAT soft-key (4.3S) or touch the SAT soft-key on the main Radio screen (8.4 & 8.4N).
- The following describes features that are available when in SIRIUS Satellite Radio mode.
- Unless otherwise noted, the information provided on the operation and functionality of the radios in this section is common to all Uconnect Touch™ radios.

Downloaded from www.Manualslib.com manuals search engine

Selecting SIRIUS Satellite Channels

Seek Up/Seek Down

- Touch the Seek arrow soft-keys for less than 2 seconds to seek through channels in SAT mode.
- Touch and hold either arrow soft-key for more than 2 seconds to bypass channels without stopping. The radio will stop at the next listenable channel once the arrow soft-key is released.

Direct Tune

- Tune directly to a SAT channel by pressing the “Tune” button on the screen, and entering the desired station number.

Info (4.3S Only)

- Provides detailed information about the current SIRIUS Satellite channel.

More... (4.3S Only)

- Access more menus: Audio, Favorites, Game Zone, and Replay.

Jump (8.4 & 8.4N Only)

- Automatically tells you when Traffic & Weather for a favorite city is available, and gives you the option to switch to that channel. Touch Jump to activate the feature. After listening to Traffic and Weather, touch Jump again to return to the previous channel.

Fav (8.4 & 8.4N Only)

- Activates the favorites menu. You can add up to 50 favorite artists or songs. Just touch Add Fav Artist or Add Fav Song while the song is playing. You will then be alerted any time one of these songs, or works by these artists, is playing on other SIRIUS channels.

SIRIUS Parental Controls

- You can skip or hide certain channels from view if you do not want access to them. Press the Settings hard-key (4.3S) or touch the More soft-key, then the Settings soft-key (8.4 & 8.4N), next touch the SIRIUS Setup soft-key, then select Channel Skip. Touch the channel(s) to be skipped (4.3S) or touch the box, check-mark, next to the channel you want skipped (8.4 & 8.4N). They will not show up in normal usage.
- SIRIUS also offers the option to permanently block selected channels. Call 1-888-539-7474 and request the Family Package.

Downloaded from www.Manualslib.com manuals search engine

Browse

- Lets you browse the SIRIUS channel listing, Favorites, Genres, Game Zone, and Weather channels. Jump setting, and also provides the SIRIUS channel list. Browse contains many sub-menus.

Browse Sub-Menu	Sub-Menu Description
All	Shows the channel listing.
Genre	Provides a list of all genres, and lets you jump to a channel within the selected genre.
Presets (8.4 & 8.4N Only)	Lets you scroll the list of Preset satellite channels. Touch the channel, or press Enter on the Tune knob, to go to that channel. Touch the trash can icon to delete a preset. Your presets are also shown at the top of the main Satellite Radio screen.
Favorites	Lets you manage artists and songs in the Favorites list and configure Alert Settings to let you know when favorite songs or artists are playing on other channels). Also, view a list of channels airing any of your Favorites.
Game Zone	Provides alerts when your favorite sports teams are starting a game which is being aired on other SIRIUS channels, or when their game score is announced. You can select and manage your Teams list here, and configure alerts.
Traffic/Weather (4.3S only)	Lets you browse Traffic & Weather information by city.
Jump (8.4 & 8.4N only)	Lets you select your favorite cities for Traffic & Weather information, which is used by the Jump feature on the main satellite radio screen.

Replay

- Lets you replay up to 44 minutes of the content of the current SIRIUS channel.

Replay Option	Option Description
Play/Pause	Touch to Pause content playback. Touch Pause/Play again to resume playback.
Rewind/RW	Rewinds the channel content in steps of 5 seconds. Touch and hold to rewind continuously, then release to begin playing content at that point.
Fast Forward/FW	Forwards the content, and works similarly to Rewind/RW. However, Fast Forward/FW can only be used when content has been previously rewound
Replay Time	Displays the amount of time in the upper center of the screen by which your content lags the Live channel.
Live	Resumes playback of Live content at any time while replaying rewound content.

Downloaded from www.Manualslib.com manuals search engine

iPod®/CD/AUX CONTROLS

Models 4.3 & 4.3S

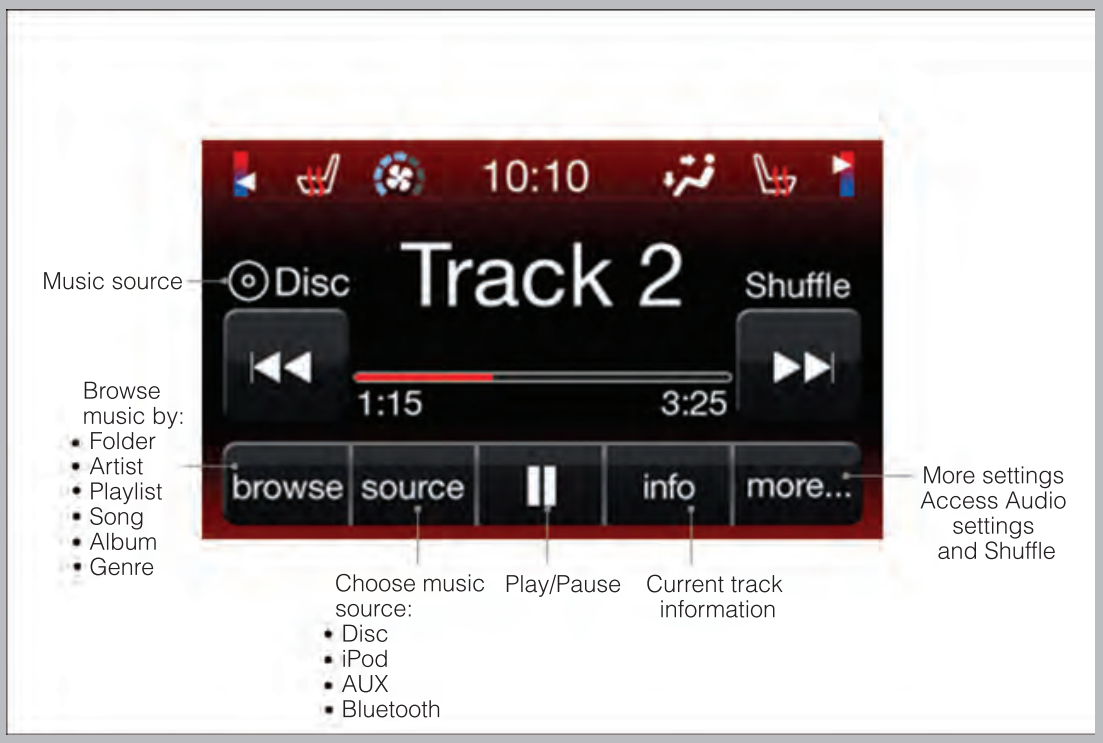

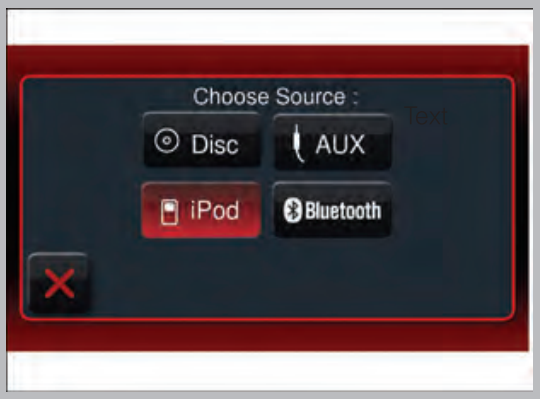

- The iPod®/CD/AUX controls are accessed by pressing the Player hard-key to enter the Player main screen, then touch the source soft-key and choose between Disc, AUX, iPod® or Bluetooth.

NOTE: Uconnect Touch™ will usually automatically switch to the appropriate mode when something is first connected or inserted into the system.

Downloaded from www.Manualslib.com manuals search engine

Models 8.4 & 8.4N

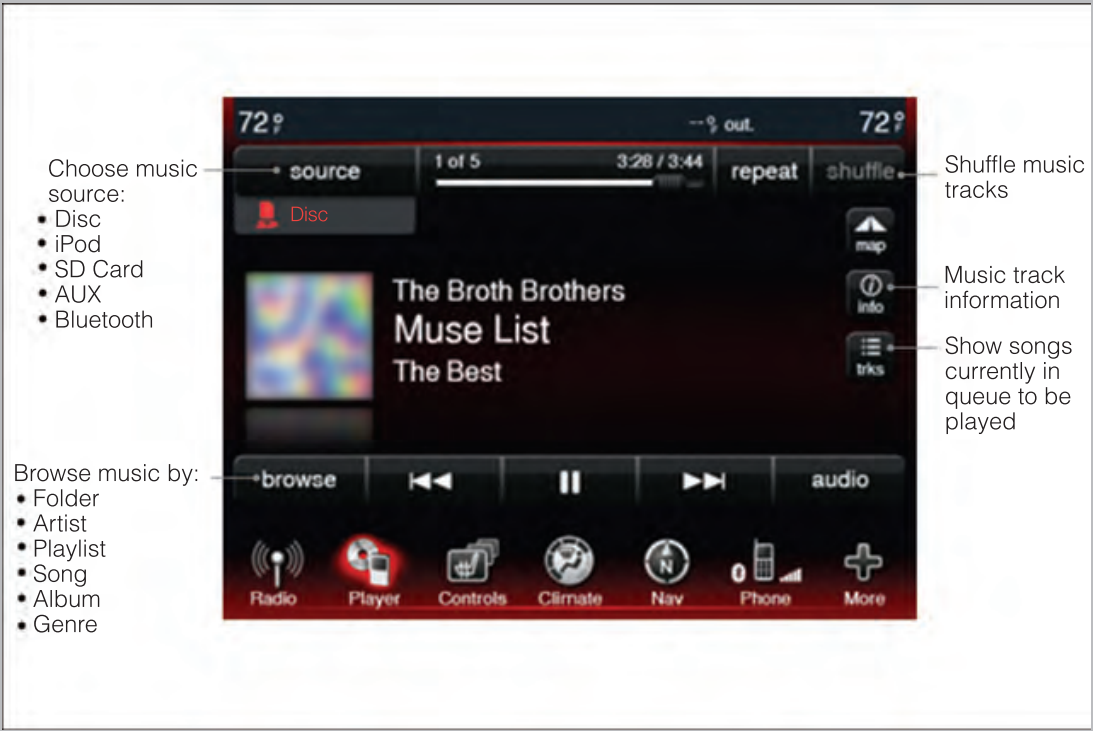

- The iPod®/CD/AUX controls are accessed by touching the Player soft-key to enter the Player main screen, then touch the source soft-key and choose between Disc, AUX, iPod®, Bluetooth or SD Card.

NOTE: Uconnect Touch™ will usually automatically switch to the appropriate mode when something is first connected or inserted into the system.

Downloaded from www.Manualslib.com manuals search engine

GARMIN® NAVIGATION (8.4N ONLY)

- Uconnect Touch 8.4N integrates Garmin's consumer-friendly navigation into your vehicle. Garmin Navigation includes Lane Assist and Junction View, Speed Limit information, and a database with over 6 million points of interest.
- Touch the NAV soft-key in the menu bar to access the Navigation system

Main Navigation Menu

Acquiring Satellites

- The GPS Satellite strength bars indicate the strength of your satellite reception.
- Acquiring satellite signals can take a few minutes. When at least one of the bars is green, your device has acquired satellite signals. If no signal is found the Navigation system still can operate with internal gyro direction & location based on data provided by the vehicle.

Finding Points of Interest

- From the main Navigation menu, touch Where To?, then touch Points of Interest.
- Select a Category and then a subcategory, if necessary.
- Select your destination and touch Go.

Finding a Place by Spelling the Name

- From the Main Navigation Menu, touch Where to?, then touch Points of Interest and then touch Spell Name.
- Enter the name of your destination.

Downloaded from www.Manualslib.com manuals search engine

- Touch Done.
- Select your destination and touch Go.

Entering a Destination Address

- From the main Navigation menu, touch Where To?, then touch Address.
- Follow the on-screen prompts to enter the address and touch Go.

Searching Near Another Location

- From the main Navigation menu, touch Where To?, then touch a destination and then touch Near.
- Select an option from the available choices.

Following Your Route

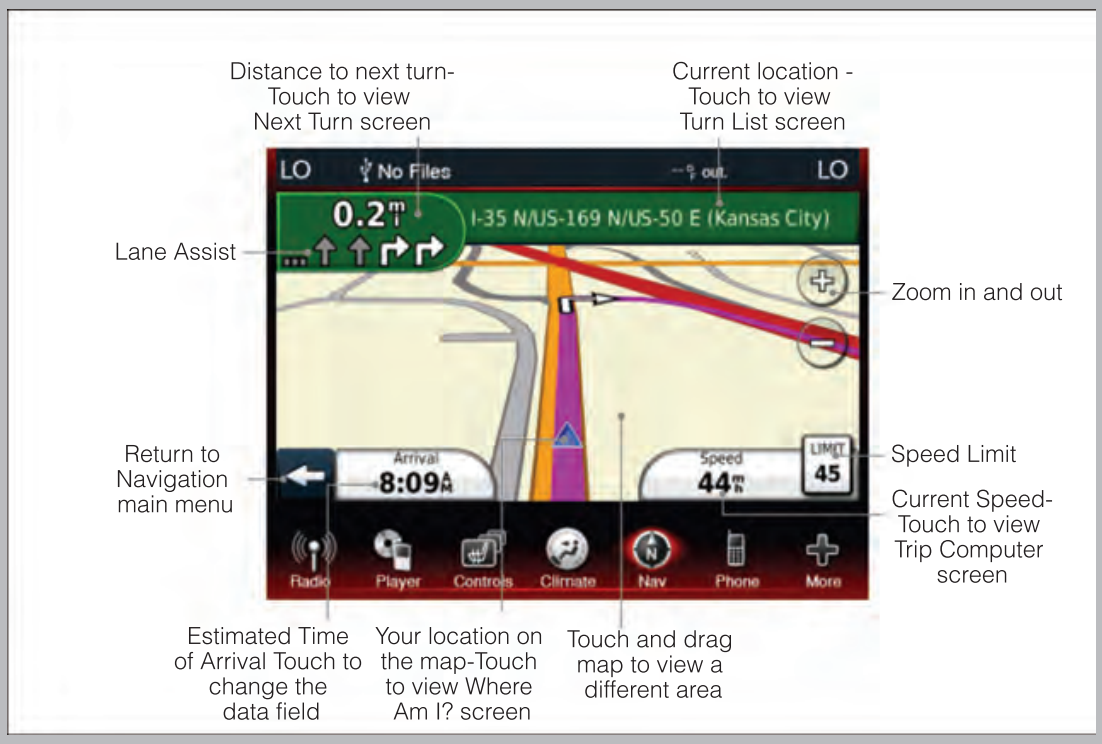

- Your route is marked with a magenta line on the map. If you depart from the original route, your route is recalculated. A speed limit icon could appear as you travel on major roadways.
- Lane Assist helps you decide which lane to be in at upcoming junctions.
- Junction View gives you an expanded view as junctions approach.

Downloaded from www.Manualslib.com manuals search engine

Adding a Stop

- To add a stop you must be navigating a route
- Touch the back arrow to return to the Main Navigation menu.
- Touch Where To?, then search for the extra stop. Then select the stop to add from the search results.
- Touch Go, then touch Add to Current Route.

Taking a Detour

- To take a detour you must be navigating a route
- Touch Detour

NOTE: If the route you are currently taking is the only reasonable option, the device might not calculate a detour.

Setting or Changing Your Home Location

- Touch the NAV soft-key in the menu bar to access the Navigation system and the Main Navigation menu.
- Touch Where To?, then touch Go Home.
- You may enter your address directly, use your current location as your home address, or choose from recently found locations.
- To edit your Home location (or other saved locations), touch Where To? from the Main Navigation menu, then touch Favorites, and touch the location you want to edit. After selecting a location to edit, touch Press for More, then Edit.

Go Home

- A Home location must be saved in the system. From the Main Navigation menu, touch Where To?, then touch Go Home.

Downloaded from www.Manualslib.com manuals search engine

SIRIUS TRAVEL LINK (8.4N ONLY)

- SIRIUS Travel Link brings a wealth of useful information into your vehicle and right to your fingertips.
- To access Travel Link, touch More soft-key, then the Travel Link soft-key

NOTE: SIRIUS Travel Link requires a subscription, sold separately after the 1 year trial subscription included with your vehicle purchase.

1 – Fuel Prices	View detailed price information for fuel stations near your current location.
2 – Movie Listings	View information on movies that are playing at theaters near your current location.
3 – Sports Scores	View scores and upcoming events for all major sports.
4 – SIRIUS	View subscription information.
5 – My Favorites	View and store your favorite location, theater and sport teams for quick access.
6 – Weather	View detailed weather conditions, forecasts and ski/snowboarding conditions at local resorts.

Downloaded from www.Manualslib.com manuals search engine

PLAYING iPod/USB/MP3 DEVICES

- There are many ways to play music from iPod®/MP3 players or USB devices through your vehicle's sound system.

1. Audio Jack

- The Audio Jack allows a portable device, such as an MP3 player or a cassette player, to be plugged into the radio and utilize the vehicle's sound system, using a 3.5 mm audio cable, to amplify the source and play through the vehicle speakers.
- Touching the Player soft-key then choose AUX source will change the mode to auxiliary device if the Audio Jack is connected, allowing the music from your portable device to be heard through the vehicle's speakers.
- The functions of the portable device are controlled using the device buttons. The volume may be controlled using the radio or portable device.

2. USB Port

- Connect your iPod® or compatible device using a USB cable into the USB Port. USB Memory sticks with audio files can also be used. Then, audio from the device can be played on the vehicles sound system while providing metadata (artist, track title, album, etc.) information on the radio display.
- When connected, the iPod®/compatible USB device can be controlled using the radio or Steering Wheel Audio Controls to play, skip to the next or previous track, browse, and list the contents.
- The iPod® battery charges when plugged into the USB port (if supported by the specific device).

Downloaded from www.Manualslib.com manuals search engine

NOTE:

- When connecting your iPod® device for the first time, the system may take several minutes to read your music, depending on the number of files. For example, the system will take approximately 5 minutes for every 1000 songs loaded on the device. Also during the reading process, the Shuffle and Browse functions will be disabled. This process is needed to ensure the full use of your iPod® features and only happens the first time it is connected. After the first time, the reading process of your iPod® will take considerably less time unless changes are made or new songs are added to the playlist.
- The USB port supports certain Mini, Classic, Nano, Touch, and iPhone® devices. The USB port also supports playing music from compatible external USB Mass Storage Class memory devices. Some iPod® software versions may not fully support the USB port features. Please visit Apple's website for iPod® software updates.

3. SD Card (8.4 & 8.4N Only)

- Play songs stored on an SD card inserted into the SD card slot.
- Song playback can be controlled using the radio or Steering Wheel Audio Controls to play, skip to the next or previous track, browse, and list the contents.

4. Bluetooth® Streaming Audio

- If equipped with Uconnect™ Voice Command, your Bluetooth-equipped iPod® devices, cell phones or other media players, may also be able to stream music to your vehicle's sound system. Your connected device must be Bluetooth-compatible, and paired with your Uconnect Touch® system (see Uconnect™ Phone for pairing instructions). You can access the music from your connected Bluetooth® device by touching the Source soft-key while in Player mode.

Uconnect™ Phone (Bluetooth® Hands Free Calling)

- If the Uconnect™ Phone Button exists on your steering wheel, then you have the Uconnect™ Phone features.
- The Uconnect™ Phone is a voice-activated, hands-free, in-vehicle communications system with Voice Command Capability (see Voice Command section).
- The Uconnect™ Phone allows you to dial a phone number with your mobile phone using simple voice commands or using screen soft-keys.
- Refer to the Understand The Features Of Your Vehicle section of your vehicle's Owner's Manual on the DVD for further details.

NOTE: The Uconnect™ Phone requires a mobile phone equipped with the Bluetooth® Hands-Free Profile, Version 1.0 or higher. For Uconnect™ customer support, call 1–877–855–8400 or visit www.dodge.com/uconnect.

Pairing a Phone

- To use the Uconnect™ Phone feature, you must first pair your bluetooth phone with the Uconnect™ system.

Downloaded from www.Manualslib.com manuals search engine

Start pairing procedure on the radio

- Models 8.4, 8.4N: Touch the Phone soft-key and then the Settings soft-key. Next, touch Add Device.
- Models 4.3, 4.3S: Press the More hard-key, then touch the Phone soft-key. Next, touch the settings soft-key and then Add Device.
- Uconnect™ Phone will display an "In progress" screen while the system is connecting.

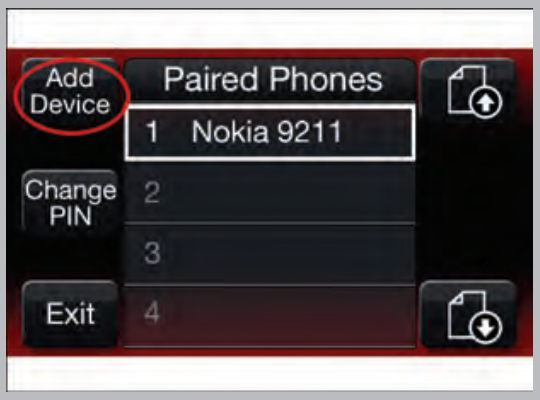

Models 4.3 & 4.3S

Models 8.4 & 8.4N

Start pairing procedure on mobile phone

- Search for available devices on your Bluetooth® enabled mobile phone. This is usually within Settings or Options under "Bluetooth". See your mobile phone's manual for details.
- When your phone finds the system, select "Uconnect" as the paired device.

Complete the pairing procedure

- When prompted on the phone, enter the 4-digit PIN number shown on the Uconnect Touch™ Screen.
- If your phone asks you to accept a connection request from Uconnect, select "Yes". If available, check the box telling it not to ask again – that way your phone will automatically connect each time you start the vehicle.

Downloaded from www.Manualslib.com manuals search engine

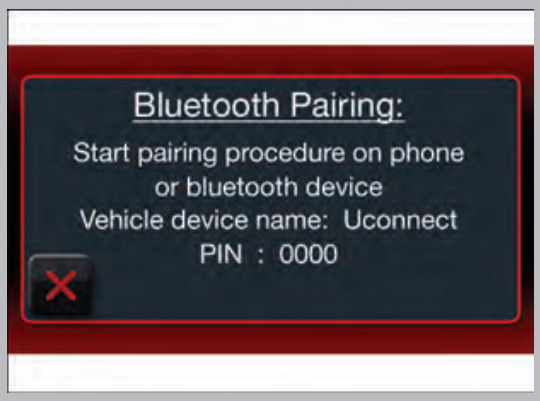

Models 4.3 & 4.3S

Models 8.4 & 8.4N

Select the mobile phone's priority level

- When the pairing process has successfully completed, the system will prompt you to choose whether or not this is your favorite phone. Selecting Yes will make this phone the highest priority. This phone will take precedence over other paired phones within range. Only one phone can be paired at a time.
- You are now ready to make hands-free calls. Press the Uconnect™ Phone button on your steering wheel to begin.

Downloaded from www.Manualslib.com manuals search engine

Phone Menu Screen – Models 4.3 & 4.3S

Phone Menu Screen – Models 8.4 & 8.4N

Downloaded from www.Manualslib.com manuals search engine

Making A Phone Call

- Press the Uconnect™ Phone button .
- (After the BEEP), say “dial” (or “call” to a name).
- (After the BEEP), say number (or name).

NOTE: You can also initiate a call by using the touch-screen on the Phone main screen.

Receiving A Call – Accept (And End)

- When an incoming call rings/is announced on Uconnect™, press the Phone button .
- To end a call, press the Phone button .

Mute (Or Unmute) Microphone During Call

- During a call, touch the mute soft-key on the Phone main screen to mute and unmute the call.

Transfer Ongoing Call Between Handset And Vehicle

- During a call, touch the Transfer soft-key on the Phone main screen to transfer an on going call between handset and vehicle.

Common Phone Commands

Common Phone Commands (Examples)
“Call John Smith”
“Call John Smith mobile”
“Dial 1 248 555 1212”
“Call Emergency”
“Call Towing Assistance”
“Redial”

Phonebook

- Uconnect Touch™ radios will automatically download your phonebook from your paired phone, if this feature is supported by your phone. Entries are updated each time that the phone is paired. If your phone book entries do not appear, check the settings on your phone. Some phones require you to enable this feature manually.
- Your phone book can be browsed on your radio screen, but editing can only be done on your phone. To browse, touch the Phone soft-key, then the Phonebook soft-key.
- Favorite phonebook entries can be saved as Favorites for quicker access. Favorites are shown at the top of your main phone screen (8.4 & 8.4N Only).

Voice Recognition Tips

- Use longer names that are less easily mistaken for others. For examples, say “Call John Doe” instead of “Call John”.
- You can “chain” commands together for faster results. Say “Call John Doe, mobile”, for example.

Downloaded from www.Manualslib.com manuals search engine

- You can “barge in” while the system is talking to you, enabling you to enter your response without waiting. Just press the Voice Command button on the steering wheel to barge in.

Changing The Volume

- Start a dialogue by pressing the Phone button , then say a command for example - "Help".
- Use the radio ON/OFF VOLUME rotary knob to adjust the volume to a comfortable level while the Uconnect™ system is speaking. Please note the volume setting for Uconnect™ is different than the audio system.

NOTE: To access help, press the Uconnect™ Phone button on the steering wheel and say "help." Touch the display or push either or VR button and say "cancel" to cancel the help session.

WARNING!

- Any voice commanded system should be used only in safe driving conditions following local laws and phone use. All attention should be kept on the roadway ahead. Failure to do so may result in a collision causing you and others to be severely injured or killed.
- In an emergency, to use Uconnect™ Phone, your mobile phone must be:
  - turned on,
  - paired to Uconnect™ Phone,
  - and have network coverage.

Uconnect™ Voice Command (8.4 & 8.4N ONLY)

- If the Uconnect™ Voice Command VR button exists on your steering wheel, then you have the Voice Command feature.
- The Voice Command feature lets you keep your hands on the steering wheel, and your eyes on the road.
- When you press the Voice Command button VR located on the radio faceplate or steering wheel, you will hear a beep. The beep is your signal to give a command. If you do not know what commands to say, you can say "help" and the system will provide options to you. If you ever wish to interrupt the system while it lists options, press the Voice Command button VR , listen for the BEEP, and say your command.
- You can “chain” commands together for faster results. Say “Call John Doe, mobile”, for example.

Downloaded from www.Manualslib.com manuals search engine

Changing The Volume

- Start a dialogue by pressing the Voice Command button VR , then say a command (for example, “help”).
- Use the radio ON/OFF VOLUME rotary knob to adjust the volume to a comfortable level while the Voice Command system is speaking. The volume setting for Voice Command is different than the audio system.
- Refer to the Understand The Features Of Your Vehicle section of your vehicle's Owner's Manual on the DVD for further details.

Common Voice Commands (Examples)

Switch Modes	“AM” “FM” “Satellite”
Radio (FM, AM)	“95.5” “95.5 FM”
SIRIUS Satellite Radio	“39” “Tune to Satellite channel 39” “Foxxhole”
SIRIUS Travel Link	“Show fuel prices” “Show movie listings” “Show current weather” “Show extended weather” “Show Travel Link favorites” “Show NFL headlines” “Show NBA rankings” “Show NFL schedules” “Show NBA scores”
Navigation	“Repeat guidance”

WARNING!

Any voice commanded system should be used only in safe driving conditions following local laws and phone use. All attention should be kept on the roadway ahead. Failure to do so may result in a collision causing you and others to be severely injured or killed.

Downloaded from www.Manualslib.com manuals search engine

VIDEO ENTERTAINMENT SYSTEM (VES)™

System Operation

- The screen is located on the headliner behind the front seat. To lower the screen, press the release button located in the rear of the overhead console.
- The system may be controlled by the front seat occupants using the touch-screen radio, or by the rear seat occupants using the remote control.
- The video screen displays information in a split-screen format. The left side of the screen is referred to as Channel 1 and the right side of the screen is referred to as Channel 2. All modes except video modes are displayed in a split-screen format.
- To use the headphones, press the power button located on the right ear cup. Select the channel on the headphones (1 or 2) that corresponds to the channel selected on the VES™ screen.

Operation Of The Touch-Screen Radio

- To view a DVD video, press the OPEN/CLOSE or LOAD hard-key and insert the disc. Playback will begin automatically after the DVD is recognized by the disc drive. If playback does not begin automatically, follow these steps:
  - Press the MENU hard-key, then touch the Rear VES™ soft-key. If a chapter list appears on the right side of the screen touch the HIDE LIST soft-key to display the Rear VES™ Control screen.
  - Touch the 1 soft-key to select an audio channel, then touch the DISC soft-key in the MEDIA column.

Operation Of The Remote

- The remote control operates similarly to any DVD remote you have used before and allows the rear seat passengers to change stations, tracks, discs and audio/video modes.
- The remote control is designed to control either channel by using the selector switch located on the right side of the remote.
- Pressing the power button will turn the VES™ system ON/OFF.
- Pressing the MODE button causes the Mode Selection menu to appear on the VES™ screen. Use the remote control arrow buttons to scroll through the available modes, then press ENTER to select the desired mode.

Auxiliary Audio/Video Input Jacks

- The Aux jacks are located on the rear of the center console.
- Connect the video game or other external media devices to the AUX jacks following the color coding for VES™ jacks.
- Using either the touch-screen radio or remote control, select AUX from the Rear VES™ Control or Mode Selection screen.
- Refer to your vehicle's Owners Manual on the DVD for further details.

Downloaded from www.Manualslib.com manuals search engine

ELECTRONIC VEHICLE INFORMATION CENTER (EVIC)

- The EVIC features a driver interactive display that is located in the instrument cluster. Pressing the controls on the left side of the steering wheel allows the driver to select vehicle information and Personal Settings. For additional information, refer to Programmable Features in this guide.
- Press and release the UP △ button to scroll upward through the main menus (Fuel Economy, Vehicle Info, Tire PSI, Cruise, Messages, Units, System Setup) and sub menus.
- Press and release the DOWN ▽ button to scroll downward through the main menus and sub menus.
- Press and release the SELECT ▷ button for access to main menus, sub menus or to select a personal setting in the setup menu.
- Press the BACK button to scroll back to a previous menu or sub menu.

Compass Calibration

- This compass is self-calibrating, which eliminates the need to set the compass manually. When the vehicle is new, the compass may appear erratic and the EVIC will display “CAL” until the compass is calibrated.
- You may also calibrate the compass by completing one or more 360 degree turns (in an area free from large metal or metallic objects) until the “CAL” message displayed in the EVIC turns off. The compass will now function normally.

Downloaded from www.Manualslib.com manuals search engine

PROGRAMMABLE FEATURES

Electronic Vehicle Information Center (EVIC) – If Equipped

- The EVIC can be used to view or change the following settings. Press the UP △ or DOWN ▽ button until System Setup displays, then press the SELECT ▷ button. Scroll through the settings using the UP or DOWN buttons. Press the SELECT ▷ button to change the setting. Press the BACK button to scroll back to a previous menu or sub menu.
  - Fuel Economy:
    - Average Fuel Economy
    - Distance To Empty (DTE)
    - Miles Per Gallon (MPG)
  - Vehicle Speed
  - To Reset The Display
  - Trip Info
    - Trip A
    - Trip B
    - Elapsed Time
  - Units
  - Vehicle Info (Customer Information Features)

Uconnect Touch™ 4.3 Customer Programmable Features

- The Uconnect Touch™ 4.3 system allows you to access Customer Programmable feature settings such as Display, Clock, Safety/Assistance, Lights, Doors & Locks, Heated Seats, Engine Off Operation, Compass Settings, Audio, Phone/ Bluetooth and SIRIUS Setup through hard-keys and soft-keys.
- Press the Settings hard-key to on the right side of the unit to access the Settings screen, use the Page Up/Down soft-keys to scroll through the following settings. The following feature settings are available:
  - Display
  - Clock
  - Safety / Assistance
  - Lights
  - Doors & Locks
  - Heated Seats
  - Engine Off Options
  - Compass Settings
  - Audio
  - Phone / Bluetooth
  - SIRIUS Setup

Downloaded from www.Manualslib.com manuals search engine

Uconnect Touch™ 8.4 Customer Programmable Features

- The Uconnect Touch™ 8.4 system allows you to access Customer Programmable feature settings such as Display, Clock, Safety/Assistance, Lights, Doors & Locks, Heated Seats, Engine Off Operation, Compass Settings, Audio, Phone/ Bluetooth and SIRIUS Setup through soft-keys.
- Touch the More soft-key to on the bottom of the screen, then touch the Settings soft-key to access the Settings screen. When making a selection, scroll up or down until the preferred setting is highlighted, then press and release the preferred setting until a check-mark appears next to the setting, showing that setting has been selected. The following feature settings are available:
  - Display
  - Clock
  - Safety / Assistance
  - Lights
  - Doors & Locks
  - Heated Seats
  - Engine Off Options
  - Compass Settings
  - Audio
  - Phone / Bluetooth
  - SIRIUS Setup

UNIVERSAL GARAGE DOOR OPENER (HOMELINK®)

- HomeLink® replaces up to three hand-held transmitters that operate devices such as garage door openers, motorized gates, lighting or home security systems. The HomeLink® unit is powered by your vehicles 12 Volt battery.
- The HomeLink® buttons that are located in the overhead console or sunvisor designate the three different HomeLink® channels.
- The HomeLink® indicator is located above the center button.

Before You Begin Programming HomeLink®

- Be sure that your vehicle is parked outside of the garage before you begin programming.
- For more efficient programming and accurate transmission of the radio-frequency signal it is recommended that a new battery be placed in the hand-held transmitter of the device that is being programmed to the HomeLink® system.
- Erase all channels before you begin programming. To erase the channels, place the ignition switch into the ON/RUN position, then press and hold the two outside HomeLink® buttons (I and III) for up 20 seconds or until the red indicator flashes.

NOTE:
- Erasing all channels should only be performed when programming HomeLink® for the first time. Do not erase channels when programming additional buttons.
- If you have any problems, or require assistance, please call toll-free 1–800–355–3515 or, on the Internet at www.HomeLink.com for information or assistance.

Downloaded from www.Manualslib.com manuals search engine

Programming A Rolling Code

- For programming Garage Door Openers that were manufactured after 1995. These Garage Door Openers can be identified by the “LEARN” or “TRAIN” button located where the hanging antenna is attached to the Garage Door Opener. It is NOT the button that is normally used to open and close the door. The name and color of the button may vary by manufacturer.
- Place the ignition switch into the ON/RUN position.
- Place the hand-held transmitter 1 to 3 in (3 to 8 cm) away from the HomeLink® button you wish to program while keeping the HomeLink® indicator light in view.
- Simultaneously press and hold both the Homelink button you want to program and the hand-held transmitter button.
- Continue to hold both buttons and observe the indicator light. The Homelink® indicator will flash slowly and then rapidly after Homelink® has received the frequency signal from the hand-held transmitter. Release both buttons after the indicator light changes from slow to rapid.
- At the garage door opener motor (in the garage), locate the “LEARN” or “TRAINING” button. This can usually be found where the hanging antenna wire is attached to the garage door opener motor. Firmly press and release the “LEARN” or “TRAINING” button.

NOTE: You have 30 seconds in which to initiate the next step after the LEARN button has been pressed.

- Return to the vehicle and press the programmed HomeLink® button twice (holding the button for two seconds each time). If the device is plugged in and activates, programming is complete.

NOTE: If the device does not activate, press the button a third time (for two seconds) to complete the training.

- To program the remaining two HomeLink® buttons, repeat each step for each remaining button. DO NOT erase the channels.

Programming A Non-Rolling Code

- For programming Garage Door Openers manufactured before 1995.
- Turn the ignition switch to the ON/RUN position.
- Place the hand-held transmitter 1 to 3 in (3 to 8 cm) away from the HomeLink® button you wish to program while keeping the HomeLink® indicator light in view.
- Simultaneously press and hold both the Homelink button you want to program and the hand-held transmitter button.
- Continue to hold both buttons and observe the indicator light. The Homelink® indicator will flash slowly and then rapidly after Homelink® has received the frequency signal from the hand-held transmitter. Release both buttons after the indicator light changes from slow to rapid.
- Press and hold the programmed HomeLink® button and observe the indicator light.

Downloaded from www.Manualslib.com manuals search engine

NOTE:

- If the indicator light stays on constantly, programming is complete and the garage door (or device) should activate when the HomeLink® button is pressed.
- To program the two remaining HomeLink® buttons, repeat each step for each remaining button. DO NOT erase the channels.

Using HomeLink®

- To operate, press and release the programmed HomeLink® button. Activation will now occur for the programmed device (i.e., garage door opener, gate operator, security system, entry door lock, home/office lighting, etc.,). The hand-held transmitter of the device may also be used at any time.

WARNING!

- Your motorized door or gate will open and close while you are programming the universal transceiver. Do not program the transceiver if people or pets are in the path of the door or gate.
- Do not run your vehicle in a closed garage or confined area while programming the transceiver. Exhaust gas from your vehicle contains Carbon Monoxide (CO) which is odorless and colorless. Carbon Monoxide is poisonous when inhaled and can cause you and others to be severely injured or killed.

POWER INVERTER

- There is a 115 Volt, 150 Watt power inverter outlet located on the back of the center console. This outlet can power cellular phones, electronics and other low power devices requiring power up to 150 Watts.

Uconnect Touch™ 4.3 System

- Press the More hard-key (located next to the Uconnect Touch™ screen).
- Press the Outlet soft-key to turn the power inverter On or Off.

Uconnect Touch™ 8.4 System

- Press the Controls soft-key (located at the bottom of the Uconnect Touch™ screen).
- Press the Outlet soft-key to turn the power inverter On or Off.

Downloaded from www.Manualslib.com manuals search engine

NOTE: The power inverter is designed with built-in overload protection. If the power rating of 150 Watts is exceeded, the power inverter will automatically shut down. Once the electrical device has been removed from the outlet, the inverter should automatically reset. If the power rating exceeds approximately 170 Watts, the power inverter may have to be reset manually. To reset the inverter manually, unplug the device and plug it in again. To avoid overloading the circuit, check the power ratings on electrical devices prior to using the inverter.

WARNING!

To Avoid Serious Injury or Death: Do not use a three-prong adaptor. Do not insert any objects into the receptacles. Do not touch with wet hands. Close the lid when not in use. If this outlet is mishandled, it may cause an electric shock and failure.

POWER OUTLET

- There is a 12 Volt power outlet located in the front storage bin below the radio. This outlet has power available when the ignition switch in the ON position.
- A second 12 Volt power outlet is located inside the center console. This outlet has power available when the ignition switch is in the LOCK, ON, or ACC position.
- A third 12 Volt power outlet is located on the back of the center console. This outlet has power available when the ignition switch is in the LOCK, ON or ACC position.
- A fourth fused 12 Volt power outlet is located on the left quarter trim panel in the cargo area. This outlet has power available when the ignition switch is in the ON or ACC position.

Downloaded from www.Manualslib.com manuals search engine

NOTE:

- Do not exceed the maximum power of 160 Watts (13 Amps) at 12 Volts. If the 160 Watt (13 Amp) power rating is exceeded, the fuse protecting the system will need to be replaced.
- Power outlets are designed for accessory plugs only. Do not insert any other object in the power outlet as this will damage the outlet and blow the fuse. Improper use of the power outlet can cause damage not covered by your new vehicle warranty.

F103 20 Amp Yellow – Power Outlet Console Bin & Power Outlet Console Rear

F102 20 Amp Yellow – Cigar Lighter Instrument Panel & Power Outlet Left Rear Cargo Area

Downloaded from www.Manualslib.com manuals search engine

TRAILER TOWING WEIGHTS (MAXIMUM TRAILER WEIGHT RATINGS)

Engine/Transmission	GCWR (Gross Combined Wt. Rating)	Frontal Area	Max. GTW (Gross Trailer Wt.)	Max. Tongue Wt.
2.4L/Automatic	6,000 lbs (2 722 kg)	22 sq ft (2.0 sq m)	1,000 lbs (454 kg) which includes up to 5 persons & Luggage	100 lbs (45 kg)
3.6L/Automatic (without Trailer Tow Prep Package	7,300 lbs (3 311 kg)	32 sq ft (3.0 sq m)	2,000 lbs (907 kg) which includes 1 to 2 persons & Luggage	200 lbs (91 kg)
	7,300 lbs (3 311 kg)	32 sq ft (3.0 sq m)	1,500 lbs (680 kg) which includes 3 to 4 persons & Luggage	150 lbs (68 kg)
	7,300 lbs (3 311 kg)	32 sq ft (3.0 sq m)	1,000 lbs (454 kg) which includes 5 to 7 persons & Luggage	100 lbs (45 kg) *Except for AWD models.
3.6L/Automatic (with Trailer Tow Prep Package	8,300 lbs (3 765 kg)	40 sq ft (3.7 sq m)	3,500 lbs (1 588 kg) which includes 1 to 2 persons & Luggage	350 lbs (159 kg)
	8,300 lbs (3 765 kg)	40 sq ft (3.7 sq m)	3,000 lbs (1 361 kg) which includes 3 to 4 persons & Luggage	300 lbs (136 kg)
	8,300 lbs (3 765 kg)	40 sq ft (3.7 sq m)	2,500 lbs (1 134 kg) which includes 5 to 6 persons & Luggage	250 lbs (113 kg) *Except for AWD models.
	8,300 lbs (3 765 kg)	40 sq ft (3.7 sq m)	2,500 lbs (1 134 kg) which includes 7 persons & Luggage	100 lbs (113 kg) *Except for AWD models.

NOTE:

- The trailer tongue weight must be considered as part of the combined weight of occupants and cargo, and should never exceed the weight referenced on the Tire and Loading Information placard.
- * For All Wheel Drive (AWD) models carrying 5 to 7 persons and luggage will exceed the rear Gross Axle Weight Rating (GAWR) and therefore should not be attempted.

Downloaded from www.Manualslib.com manuals search engine

RECREATIONAL TOWING (BEHIND MOTORHOME, ETC.)

Towing This Vehicle Behind Another Vehicle (Flat Towing With All Four Wheels On The Ground)

Recreational towing for this vehicle is not recommended.

NOTE: If the vehicle requires towing, make sure all four wheels are off the ground.

Downloaded from www.Manualslib.com manuals search engine

24-HOUR TOWING ASSISTANCE

- Dial toll-free 1-800-521-2779 or 1-800-363-4869 for Canadian residents.
- Provide your name, vehicle identification number and license plate number.
- Provide your location, including telephone number, from which you are calling.
- Briefly describe the nature of the problem and answer a few simple questions.
- You will be given the name of the service provider and an estimated time of arrival. If you feel you are in an “unsafe situation”, please let us know. With your consent, we will contact local police or safety authorities.

INSTRUMENT CLUSTER WARNING LIGHTS

- Electronic Stability Control (ESC) Indicator Light

- If this indicator light flashes during acceleration, apply as little throttle as possible. While driving, ease up on the accelerator. Adapt your speed and driving to the prevailing road conditions. To improve the vehicle's traction when starting off in deep snow, sand or gravel, it may be desirable to switch the ESC system off.

- Tire Pressure Monitoring System (TPMS) Light

- Each tire, including the spare (if provided), should be checked monthly, when cold and inflated to the inflation pressure recommended by the vehicle manufacturer on the vehicle placard or tire inflation pressure label. (If your vehicle has tires of a different size than the size indicated on the vehicle placard or tire inflation pressure label, you should determine the proper tire inflation pressure for those tires.)
- As an added safety feature, your vehicle has been equipped with a Tire Pressure Monitoring System (TPMS) that illuminates a low tire pressure telltale when one or more of your tires is significantly under-inflated. Accordingly, when the low tire pressure telltale illuminates, you should stop and check your tires as soon as possible, and inflate them to the proper pressure. Driving on a significantly under-inflated tire causes the tire to overheat and can lead to tire failure. Under-inflation also reduces fuel efficiency and tire tread life, and may affect the vehicle’s handling and stopping ability.
- **IF THE LIGHT STARTS FLASHING INDICATING A LOW TIRE PRESSURE, ADJUST THE AIR PRESSURE IN THE LOW TIRE TO THE AIR PRESSURE SHOWN ON THE VEHICLE PLACARD OR TIRE INFLATION PRESSURE LABEL LOCATED ON THE DRIVER'S DOOR. NOTE: AFTER INFLATION, THE VEHICLE MAY NEED TO BE DRIVEN FOR 20 MINUTES BEFORE THE FLASHING LIGHT WILL TURN OFF.**
- Please note that the TPMS is not a substitute for proper tire maintenance, and it is the driver’s responsibility to maintain correct tire pressure, even if under-inflation has not reached the level to trigger illumination of the TPMS low tire pressure telltale.

Downloaded from www.Manualslib.com manuals search engine

- Your vehicle has also been equipped with a TPMS malfunction indicator to indicate when the system is not operating properly. The TPMS malfunction indicator is combined with the low tire pressure telltale. When the system detects a malfunction, the telltale will flash for approximately one minute and then remain continuously illuminated. This sequence will continue each time the vehicle is restarted as long as the malfunction exists.
- When the malfunction indicator is illuminated, the system may not be able to detect or signal low tire pressure as intended. TPMS malfunctions may occur for a variety of reasons, including the installation of replacement or alternate tires or wheels on the vehicle that prevent the TPMS from functioning properly. Always check the TPMS malfunction telltale after replacing one or more tires or wheels on your vehicle, to ensure that the replacement or alternate tires and wheels allow the TPMS to continue to function properly.

NOTE: Tire pressures change by approximately 1 psi (7 kPa) per 12° F (7° C) of air temperature change. Keep this in mind when checking tire pressure inside a garage, especially in the Winter. Example: If garage temperature is 68°F (20°C) and the outside temperature is 32°F (0°C), then the cold tire inflation pressure should be increased by 3 psi (21 kPa), which equals 1 psi (7 kPa) for every 12°F (7°C) for this outside temperature condition.

CAUTION!

The TPMS has been optimized for the original equipment tires and wheels. TPMS pressures and warning have been established for the tire size equipped on your vehicle. Undesirable system operation or sensor damage may result when using replacement equipment that is not of the same size, type, and/or style. Aftermarket wheels can cause sensor damage. Do not use tire sealant from a can, or balance beads if your vehicle is equipped with a TPMS, as damage to the sensors may result.

- Engine Temperature Warning Light

- This light warns of an overheated engine condition.
- If the light turns on and a warning chime sounds while driving, safely pull over and stop the vehicle. If the A/C system is on, turn it off. Also, shift the transmission into NEUTRAL and idle the vehicle. If the temperature reading does not return to normal, turn the engine off immediately.
- We recommend that you do not operate the vehicle or engine damage will occur. Have the vehicle serviced immediately.

WARNING!

A hot engine cooling system is dangerous. You or others could be badly burned by steam or boiling coolant. You may want to call an authorized service center for service if your vehicle overheats.

Downloaded from www.Manualslib.com manuals search engine

BRAKE - Brake Warning Light

- The Brake Warning light illuminates when there is either a system malfunction or the parking brake is applied. If the light is on and the parking brake is not applied, it indicates a possible brake hydraulic malfunction, brake booster problem or an Anti-Lock Brake System problem.
- Please have your vehicle serviced immediately.

WARNING!

Driving a vehicle with the red brake light on is dangerous. Part of the brake system may have failed. It will take longer to stop the vehicle. You could have a collision. Have the vehicle checked immediately.

- Malfunction Indicator Light (MIL)

- Certain conditions, such as a loose or missing gas cap, poor fuel quality, etc., may illuminate the MIL after engine start. The vehicle should be serviced if the light stays on through several typical driving cycles. In most situations, the vehicle will drive normally and not require towing.
- If the MIL flashes when the engine is running, serious conditions may exist that could lead to immediate loss of power or severe catalytic converter damage. We recommend you do not operate the vehicle. Have the vehicle serviced immediately.

- Electronic Stability Control (ESC) Malfunction Indicator Light

- If the ESC indicator light comes on continuously with the engine running, a malfunction has been detected.
- If this light remains on after several ignition cycles, and the vehicle has been driven several miles (kilometers) at speeds greater than 30 mph (48 km/h), we recommend you drive to the nearest service center and have the vehicle serviced immediately.

- Charging System Light

- This light shows the status of the electrical charging system. If the charging system light remains on, it means that the vehicle is experiencing a problem with the charging system.
- We recommend you do not continue driving if the charging system light is on. Have the vehicle serviced immediately.

- Oil Pressure Warning Light

- This light indicates low engine oil pressure. If the light turns on while driving, stop the vehicle and shut off the engine as soon as possible. A chime will sound for four minutes when this light turns on.
- We recommend you do not operate the vehicle or engine damage will occur. Have the vehicle serviced immediately.

Downloaded from www.Manualslib.com manuals search engine

- Anti-Lock Brake (ABS) Light

- This light monitors the Anti-Lock Brake System (ABS).
- If the light is not on during starting, stays on, or turns on while driving, we recommend you drive to the nearest service center and have the vehicle serviced immediately.

- Electronic Throttle Control (ETC) Light

- This light informs you of a problem with the Electronic Throttle Control (ETC) system.
- If a problem is detected, the light will come on while the engine is running. Cycle the ignition when the vehicle has completely stopped and the shift lever is placed in the PARK position; the light should turn off.
- If the light remains lit with the engine running, your vehicle will usually be drivable; however, see an authorized service center immediately. If the light is flashing when the engine is running, immediate service is required and you may experience reduced performance, an elevated/rough idle or engine stall and your vehicle may require towing.

- Air Bag Warning Light

- If the light is not on during starting, stays on, or turns on while driving, have the vehicle serviced by an authorized service center immediately.

Fuel Cap/Loose Gas Cap Message

- If a “gas cap” message appears, tighten the gas cap until a “clicking” sound is heard.
- Press the odometer reset button to turn the message off.
- If the message continues to appear for more than three days after tightening the gas cap, see your authorized service center.

Oil Change Indicator

Message

- If an “oil change due” message appears and a single chime sounds, it is time for your next required oil change.

Resetting The Light After Servicing

Vehicles Equipped With Keyless Enter-N-Go

- Without pressing the brake pedal, push the ENGINE START/STOP button and cycle the ignition to the ON/RUN position (Do not start the engine.)
- Fully depress the accelerator pedal, slowly, three times within 10 seconds.
- Without pressing the brake pedal, push the ENGINE START/STOP button once to return the ignition to the OFF/LOCK position.

Vehicles Not Equipped With Keyless Enter-N-Go

- Turn the ignition switch to the ON/RUN position (Do not start the engine.)
- Fully depress the accelerator pedal, slowly, three times within 10 seconds.
- Turn the ignition switch to the OFF/LOCK position.

Downloaded from www.Manualslib.com manuals search engine

IF YOUR ENGINE OVERHEATS

- In any of the following situations, you can reduce the potential for overheating by taking the appropriate action.
- On the highways — slow down.
- In city traffic — while stopped, place the transmission in NEUTRAL, but do not increase engine idle speed.

NOTE: There are steps that you can take to slow down an impending overheat condition:

- If your air conditioner (A/C) is on, turn it off. The A/C system adds heat to the engine cooling system and turning the A/C off can help remove this heat.
- You can also turn the temperature control to maximum heat, the mode control to floor and the blower control to high. This allows the heater core to act as a supplement to the radiator and aids in removing heat from the engine cooling system.

CAUTION!

Driving with a hot cooling system could damage your vehicle. If the temperature gauge reads 240°F (116 °C) or greater pull over and stop the vehicle. Idle the vehicle with the air conditioner turned off until the pointer drops back into the normal range 200–230°F (93–110°C). If the pointer remains at 240°F (116°C) or greater and you hear a chime, turn the engine off immediately and call for service.

WARNING!

You or others can be badly burned by hot engine coolant (antifreeze) or steam from your radiator. If you see or hear steam coming from under the hood, do not open the hood until the radiator has had time to cool. Never try to open a cooling system pressure cap when the radiator or coolant bottle is hot.

Downloaded from www.Manualslib.com manuals search engine

JACKING AND TIRE CHANGING

Jack Location

- The jack and jack-handle are stowed underneath a cover in the rear storage bin in the cargo area.

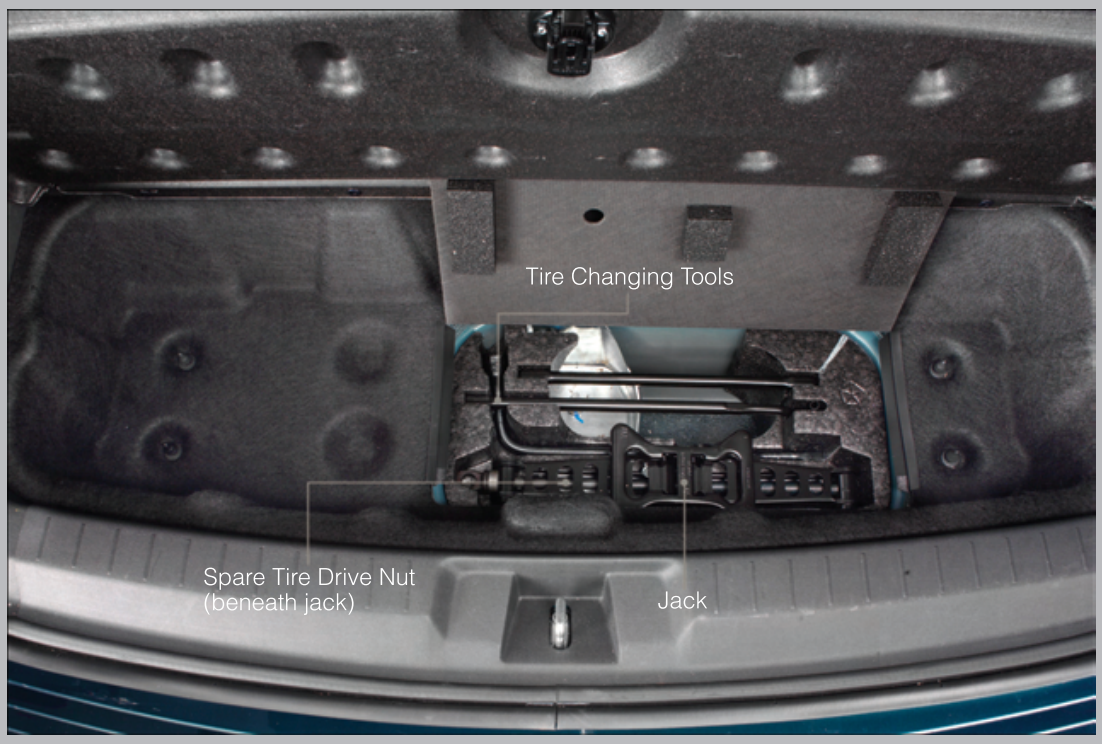

Spare Tire Location

- The spare tire is stowed underneath the rear of the vehicle and is held in place by means of a cable winch mechanism.

Preparations For Jacking

1. Park the vehicle on a firm, level surface as far from the edge of the roadway as possible. Avoid icy or slippery areas.
2. Turn on the Hazard Warning flashers.
3. Set the parking brake.
4. Place the shift lever in PARK.
5. Turn OFF the ignition.

Downloaded from www.Manualslib.com manuals search engine

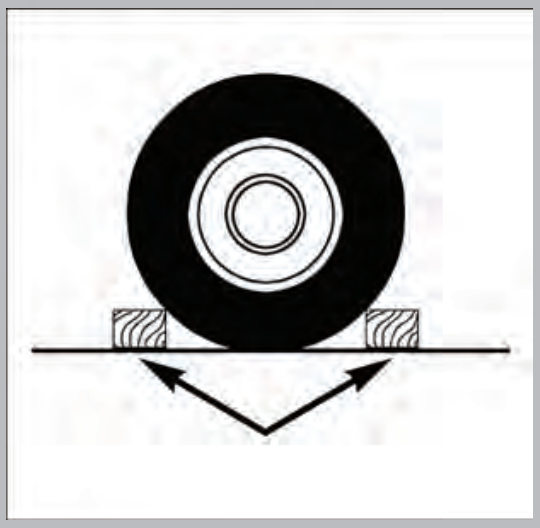

- Block both the front and rear of the wheel diagonally opposite of the jacking position. For example, if changing the right front tire, block the left rear wheel.

NOTE: Passengers should not remain in the vehicle when the vehicle is being jacked.

Spare Tire Removal

NOTE: On seven-passenger models, fold the third-row passenger seats flat. This will provide more space when accessing the jacking tools and when operating the winch mechanism.

1. Remove the jack-handle components 1, 2 and 3 from storage and assemble them.

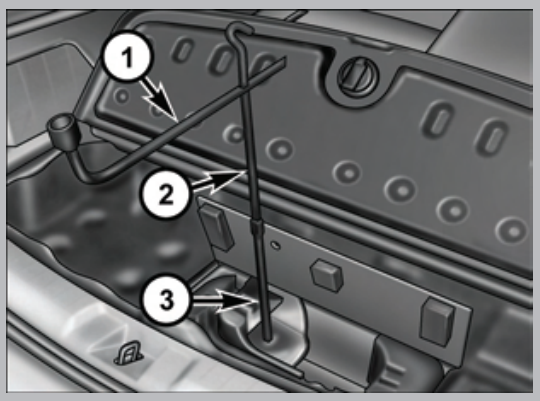

NOTE: Assemble components 2 and 3 by seating the small ball at the end of component 2 in the small hole at the end of component 3. This will lock these components together. Assemble components 1 and 2 so that the wheel nut socket at the end of component 1 faces upward when seated on component 2. This will make it easier to rotate the assembly when operating the winch mechanism.

2. Fit the assembled jack-handle over the winch drive nut located in the jack storage area. Rotate the jack-handle assembly counterclockwise until the spare tire is on the ground with enough cable slack to allow you to pull the spare tire out from underneath the vehicle.
3. Pull the spare tire out from underneath the vehicle and raise it upright so the tire's tread is on the ground.
4. Tilt the retainer at the end of the winch cable and remove it from the center of the wheel.

Downloaded from www.Manualslib.com manuals search engine

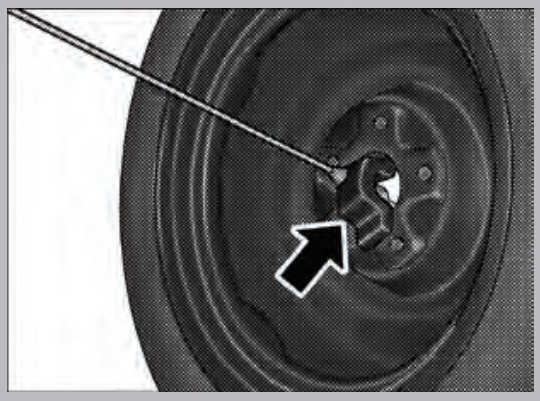

Spare Tire Stowage

NOTE: Refer to "Spare Tire Removal" for information on assembling the winch tools.

1. Place the spare tire near to the winch cable. Hold the spare upright so that the tire's tread is on the ground and the valve stem is at the top of the wheel facing away from the rear of the vehicle.
2. Tilt the retainer at the end of the winch cable and drop it through the center of the wheel. Then place the spare tire with the cable and retainer underneath the vehicle.
3. Fit the assembled jack-handle over the winch drive nut. Rotate the jack-handle assembly clockwise to raise the spare tire into the storage area. Continue to rotate the jack-handle assembly until you hear the winch mechanism click three times. It cannot be over tightened. Push against the tire several times to be sure it is held securely in place.

Downloaded from www.Manualslib.com manuals search engine

Jacking Instructions

1. Remove the spare tire, jack, and jack-handle from stowage.
2. Loosen, but do not remove, the wheel nuts on the wheel with the flat tire. Turn the wheel nuts counterclockwise one turn while the wheel is still on the ground.

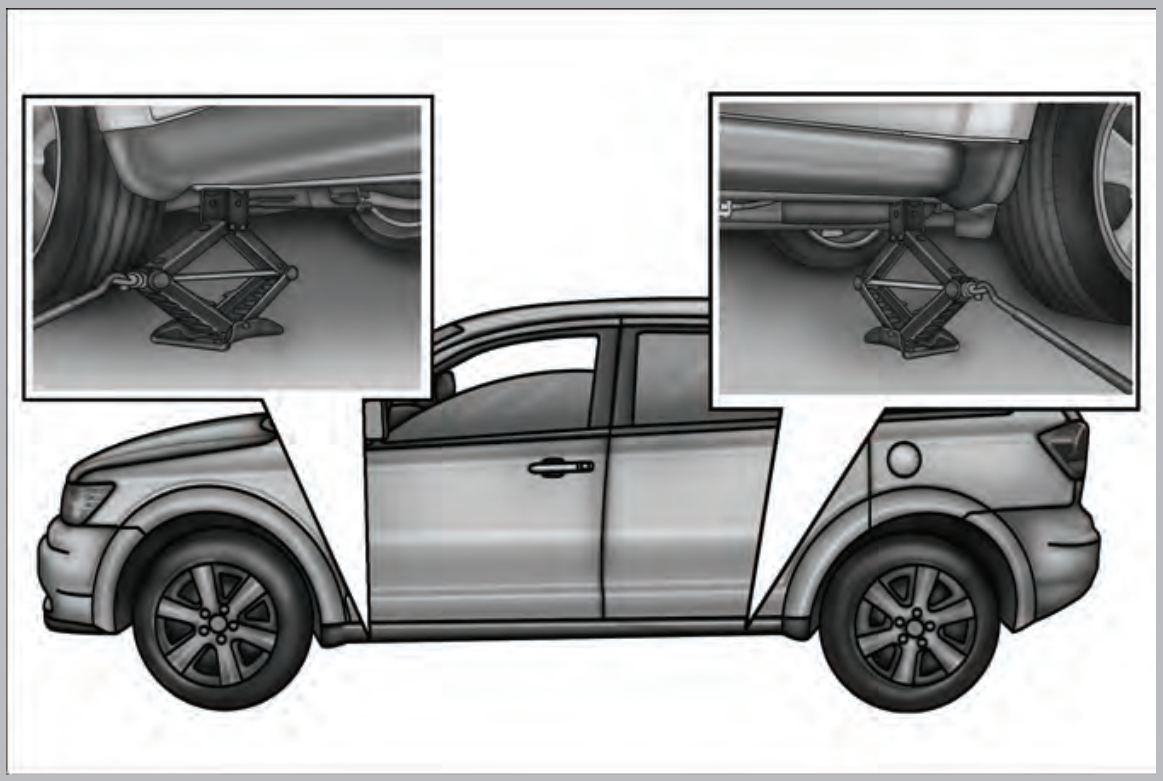

3. Place the jack underneath the lift area that is closest to the flat tire. Turn the jack screw clockwise to firmly engage the jack saddle with the lift area of the sill flange.

Downloaded from www.Manualslib.com manuals search engine

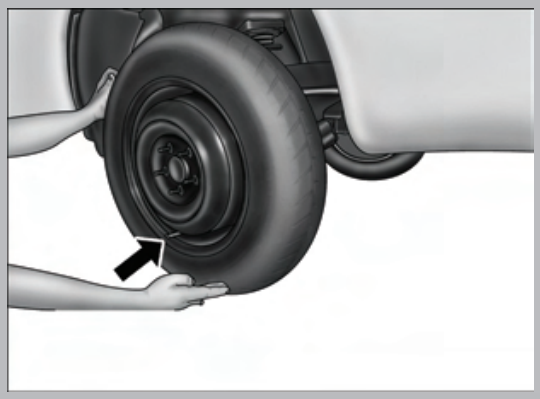

4. Raise the vehicle by turning the jack screw clockwise with the jack handle. Raise the vehicle until the tire just clears the road surface and enough clearance is obtained to install the spare tire. Minimum tire lift provides maximum stability.
5. Remove the wheel nuts. For vehicles so equipped, remove the wheel cover from the wheel by hand. Do not pry the wheel cover off. Then pull the wheel off the hub.
6. Install the spare tire.

NOTE:

- For vehicles so equipped, do not attempt to install a center cap or wheel cover on the compact spare.

7. Install the wheel nuts with the cone-shaped end of the nut toward the wheel. Lightly tighten the wheel nuts.
8. Lower the vehicle by turning the jack screw counterclockwise with the jack handle.
9. Finish tightening the lug nuts. Push down on the wrench while at the end of the handle for increased leverage. Tighten the lug nuts in a star pattern until each nut has been tightened twice. The correct tightness of each lug nut is 95 ft/lbs (130 N·m). If in doubt about the correct tightness, have them checked with a torque wrench by you authorized dealer or service station.
10. Lower the jack to its fully closed position.
11. Place the deflated (flat) tire in the cargo area. **Do not stow the deflated tire in the spare tire stowage location.** Have the deflated (flat) tire repaired or replaced as soon as possible.

Downloaded from www.Manualslib.com manuals search engine

12. To stow the winch cable and retainer, fit the assembled jack-handle over the winch drive nut. Rotate the jack-handle assembly clockwise until you hear the winch mechanism click three times. It cannot be over tightened.
13. Stow the jack-handle and jack.
14. Check the tire pressure as soon as possible. Adjust the tire pressure as required.

Road Tire Installation

Vehicles Equipped With Wheel Covers

1. Mount the road tire on the axle.
2. To ease the installation process for steel wheels with wheel covers, install two lug nuts on the mounting studs which are on each side of the valve stem. Install the lug nuts with the cone shaped end of the nut toward the wheel. Lightly tighten the lug nuts.

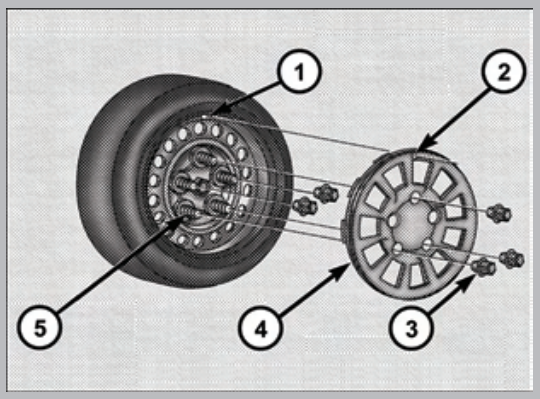

1 — Valve Stem
2 — Valve Notch
3 — Wheel Lug Nut
4 — Wheel Cover
5 — Mounting Stud

3. Align the valve notch in the wheel cover with the valve stem on the wheel. Install the cover by hand, snapping the cover over the two lug nuts. Do not use a hammer or excessive force to install the cover.
4. Install the remaining lug nuts with the cone shaped end of the nut toward the wheel. Lightly tighten the lug nuts.
5. Lower the vehicle to the ground by turning the jack handle counterclockwise.
6. Finish tightening the lug nuts. Push down on the wrench while at the end of the handle for increased leverage. Tighten the lug nuts in a star pattern until each nut has been tightened twice. The correct tightness of each lug nut is 95 ft/lbs (130 N·m). If in doubt about the correct tightness, have them checked with a torque wrench by your authorized dealer or service station.
7. After 25 miles (40 km) check the lug nut torque with a torque wrench to ensure that all lug nuts are properly seated against the wheel.

Vehicles Without Wheel Covers

1. Mount the road tire on the axle.
2. Install the remaining lug nuts with the cone shaped end of the nut toward the wheel. Lightly tighten the lug nuts.
3. Lower the vehicle to the ground by turning the jack handle counterclockwise.

Downloaded from www.Manualslib.com manuals search engine

4. Finish tightening the lug nuts. Push down on the wrench while at the end of the handle for increased leverage. Tighten the lug nuts in a star pattern until each nut has been tightened twice. The correct tightness of each lug nut is 95 ft/lbs (130 N·m). If in doubt about the correct tightness, have them checked with a torque wrench by your authorized dealer or service station.
5. After 25 miles (40 km) check the lug nut torque with a torque wrench to ensure that all lug nuts are properly seated against the wheel.

CAUTION!

- The winch mechanism is designed for use with the jack-handle only. Use of an air wrench or other power tools is not recommended and it can damage the winch.
- Do not attempt to raise the vehicle by jacking on locations other than those indicated in the Jacking Instructions for this vehicle.
- Be sure to mount the spare tire with the valve stem facing outward. The vehicle could be damaged if the spare tire is mounted incorrectly.

WARNING!

- Do not attempt to change a tire on the side of the vehicle close to moving traffic. Pull far enough off the road to avoid the danger of being hit when operating the jack or changing the wheel.
- Being under a jacked-up vehicle is dangerous. The vehicle could slip off the jack and fall on you. You could be crushed. Never put any part of your body under a vehicle that is on a jack. If you need to get under a raised vehicle, take it to a service center where it can be raised on a lift.
- Never start or run the engine while the vehicle is on a jack.
- The jack is designed to be used as a tool for changing tires only. The jack should not be used to lift the vehicle for service purposes. The vehicle should be jacked on a firm level surface only. Avoid ice or slippery areas.
- Do not attempt to change a tire on the side of the vehicle close to moving traffic. Pull far enough off the road to avoid the danger of being hit when operating the jack or changing the wheel.
- Carefully follow these tire changing warnings to help prevent personal injury or damage to your vehicle:
- Always park on a firm, level surface as far from the edge of the roadway as possible before raising the vehicle.
- Turn on the Hazard Warning flasher.
- Block the wheel diagonally opposite the wheel to be raised.
- Set the parking brake firmly and set an automatic transmission in PARK.
- Never start or run the engine with the vehicle on a jack.
- Do not let anyone sit in the vehicle when it is on a jack.

(Continued)

Downloaded from www.Manualslib.com manuals search engine

WARNING! ***(Continued)***

- Do not get under the vehicle when it is on a jack.
- Only use the jack in the positions indicated and for lifting this vehicle during a tire change.
- If working on or near a roadway, be extremely careful of motor traffic.
- To assure that spare tires, flat or inflated, are securely stowed, spares must be stowed with the valve stem facing the ground.
- Raising the vehicle higher than necessary can make the vehicle less stable. It could slip off the jack and hurt someone near it. Raise the vehicle only enough to remove the tire.
- To avoid possible personal injury, handle the wheel covers with care to avoid contact with any sharp edges.
- To avoid the risk of forcing the vehicle off the jack, do not tighten the wheel nuts fully until the vehicle has been lowered. Failure to follow this warning may result in personal injury.
- A loose tire or jack, thrown forward in a collision or hard stop could endanger the occupants of the vehicle. Always stow the jack parts and the spare tire in the places provided. Have the deflated (flat) tire repaired or replaced immediately.

JUMP-STARTING

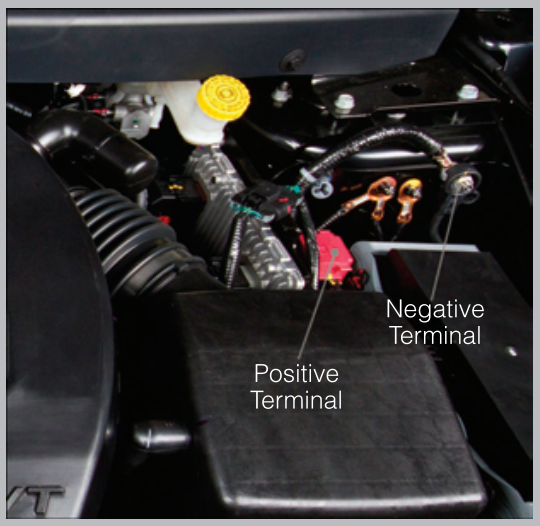

- If your vehicle has a discharged battery it can be jump-started using a set of jumper cables and a battery in another vehicle or by using a portable battery booster pack.
- Jump-starting can be dangerous if done improperly so please follow the procedures in this section carefully.

NOTE: When using a portable battery booster pack follow the manufacturer's operating instructions and precautions.

Preparations for Jump-Start

- The battery in your vehicle is located between the left front headlight assembly and the left front wheel splash shield. To allow jump-starting there are remote battery posts located on the left side of the engine compartment.

Downloaded from www.Manualslib.com manuals search engine

- Set the parking brake, shift the automatic transmission into PARK and turn the ignition to LOCK.
- Turn off the heater, radio, and all unnecessary electrical accessories.
- Remove the protective cover over the remote positive **(+)** battery post. To remove the cover, press the locking tab and pull upward on the cover.
- If using another vehicle to jump-start the battery, park the vehicle within the jumper cables reach, set the parking brake and make sure the ignition is OFF.

Jump-Starting Procedure

- Connect the positive **(+)** end of the jumper cable to the remote positive **(+)** post of the discharged vehicle.
- Connect the opposite end of the positive **(+)** jumper cable to the positive **(+)** post of the booster battery.
- Connect the negative end **(-)** of the jumper cable to the negative **(-)** post of the booster battery.
- Connect the opposite end of the negative **(-)** jumper cable to the remote negative **(-)** post of the vehicle with the discharged battery.
- Start the engine in the vehicle that has the booster battery, let the engine idle a few minutes, and then start the engine in the vehicle with the discharged battery.

  Once the engine is started, remove the jumper cables in the reverse sequence:
- Disconnect the negative **(-)** jumper cable from the remote negative **(-)** post of the vehicle with the discharged battery.
- Disconnect the negative end **(-)** of the jumper cable from the negative **(-)** post of the booster battery.
- Disconnect the opposite end of the positive **(+)** jumper cable from the positive **(+)** post of the booster battery.
- Disconnect the positive **(+)** end of the jumper cable from the remote positive **(+)** post of the discharged vehicle.
- Reinstall the protective cover over the remote positive **(+)** battery post of the discharged vehicle.
- If frequent jump-starting is required to start your vehicle you should have the battery and charging system inspected at your authorized dealer.

CAUTION!

- Do not use a portable battery booster pack or any other booster source with a system voltage greater than 12 Volts or damage to the battery, starter motor, alternator or electrical system may occur.
- Failure to follow these procedures could result in damage to the charging system of the booster vehicle or the discharged vehicle.
- Accessories that can be plugged into the vehicle power outlets draw power from the vehicle's battery, even when not in use (i.e., cellular phones, etc.). Eventually, if plugged in long enough, the vehicle's battery will discharge sufficiently to degrade battery life and/or prevent the engine from starting.

Downloaded from www.Manualslib.com manuals search engine

WARNING!

- When temperatures are below the freezing point, electrolyte in a discharged battery may freeze. Do not attempt jump-starting because the battery could rupture or explode and cause personal injury. Battery temperature must be brought above the freezing point before attempting a jump-start.
- Take care to avoid the radiator cooling fan whenever the hood is raised. It can start anytime the ignition switch is on. You can be injured by moving fan blades.
- Remove any metal jewelry, such as watch bands or bracelets, that might make an inadvertent electrical contact. You could be severely injured.
- Batteries contain sulfuric acid that can burn your skin or eyes and generate hydrogen gas which is flammable and explosive. Keep open flames or sparks away from the battery.
- Do not allow vehicles to touch each other as this could establish a ground connection and personal injury could result.
- Failure to follow this procedure could result in personal injury or property damage due to battery explosion.
- Do not connect the cable to the negative post **(-)** of the discharged battery. The resulting electrical spark could cause the battery to explode and could result in personal injury.

SHIFT LEVER OVERRIDE

- If a malfunction occurs and the shift lever cannot be moved out of the PARK position, you can use the following procedure to temporarily move the shift lever:
  - To access the shift lever override, remove the cubby bin liner located in the center console behind the shift lever. The override access port is at the front of the cubby bin.
  - Firmly set the parking brake.
  - Turn the ignition switch to the ACC or ON position without starting the engine.
  - Press and maintain firm pressure on the brake pedal.
  - Using a screwdriver or similar tool, press and hold the override tab through the access port on the center console.
  - Move the shift lever into the NEUTRAL position.
  - The vehicle may then be started in NEUTRAL.
  - Reinstall the override cover.

Downloaded from www.Manualslib.com manuals search engine

TOWING A DISABLED VEHICLE

Model	Flat Towing (all four wheels on the ground)	Flatbed Towing (all four wheels suspended OFF the ground)	Front Wheels Raised, Rear Wheels on the Ground	Rear Wheels Raised, Front Wheels on the Ground
FWD Without a Key	NOT Permitted	Recommended Method	May Be Used	NOT Permitted without a front end dolly
FWD With a Key	Shift lever must be in NEUTRAL. The distance to be traveled must not exceed 15 mi (25 km), and the towing speed must not exceed 25 mph (40 km/h).	Recommended Method	May Be Used	NOT Permitted without a front end dolly
AWD Without a Key	NOT Permitted	Recommended Method	NOT Permitted	NOT Permitted
AWD With a Key	Shift lever must be in NEUTRAL, the distance to be traveled must not exceed 15 mi (25 km), the towing speed must not exceed 25 mph (40 km/h), and both front and rear wheels must be on the ground.	Recommended Method	NOT Permitted	NOT Permitted

Downloaded from www.Manualslib.com manuals search engine

FREEING A STUCK VEHICLE

- If your vehicle becomes stuck in mud, sand or snow, it can often be moved by a rocking motion. Turn your steering wheel right and left to clear the area around the front wheels. Then, move the shift lever back and forth between REVERSE and DRIVE. Using minimal accelerator pedal pressure to maintain the rocking motion, without spinning the wheels, is most effective.

NOTE: If your vehicle is equipped with Electronic Stability Control (ESC) or Traction Control OFF, turn the system off before attempting to "rock" the vehicle.

CAUTION!

- When "rocking" a stuck vehicle by moving between REVERSE and DRIVE, do not spin the wheels faster than 15 mph (24 km/h), or drivetrain damage may result.
- Revving the engine or spinning the wheels too fast may lead to transmission overheating and failure. It can also damage the tires. Do not spin the wheels above 30 mph (48 km/h) while in gear (no transmission shifting occurring).

WARNING!

Fast spinning tires can be dangerous. Forces generated by excessive wheel speeds may cause tire damage or failure. A tire could explode and injure someone. Do not spin your vehicle's wheels faster than 30 mph (48 km/h) when you are stuck. Do not let anyone near a spinning wheel, no matter what the speed.

Downloaded from www.Manualslib.com manuals search engine

EVENT DATA RECORDER (EDR)

- This vehicle is equipped with an event data recorder (EDR). The main purpose of an EDR is to record, in certain crash or near crash-like situations, such as an air bag deployment or hitting a road obstacle, data that will assist in understanding how a vehicle's systems performed. The EDR is designed to record data related to vehicle dynamics and safety systems for a short period of time, typically 30 seconds or less. The EDR in this vehicle is designed to record such data as:
  - How various systems in your vehicle were operating;
  - Whether or not the driver and passenger safety belts were buckled/fastened;
  - How far (if at all) the driver was depressing the accelerator and/or brake pedal; and,
  - How fast the vehicle was traveling.
- These data can help provide a better understanding of the circumstances in which crashes and injuries occur.

NOTE: EDR data are recorded by your vehicle only if a non-trivial crash situation occurs; no data are recorded by the EDR under normal driving conditions and no personal data (e.g. name, gender, age, and crash location) are recorded. However, other parties, such as law enforcement, could combine the EDR data with the type of personally identifying data routinely acquired during a crash investigation.

- To read data recorded by an EDR, special equipment is required, and access to the vehicle or the EDR is needed. In addition to the vehicle manufacturer, other parties such as law enforcement, that have the special equipment, can read the information if they have access to the vehicle or the EDR.

Downloaded from www.Manualslib.com manuals search engine

OPENING THE HOOD

- Pull the release lever located below the instrument panel and in front of the driver's door.
- Raise the hood and locate the safety latch, in the middle of the hood opening.
- Move the safety latch while lifting the hood at the same time.
- Insert the support rod into the slot on the hood.
- To close the hood, remove the support rod and place it in the retaining clip, then lower the hood slowly.

WARNING!

Be sure the hood is fully latched before driving your vehicle. If the hood is not fully latched, it could open when the vehicle is in motion and block your vision. Failure to follow this warning could result in serious injury or death.

Downloaded from www.Manualslib.com manuals search engine

ENGINE COMPARTMENT

2.4L Engine

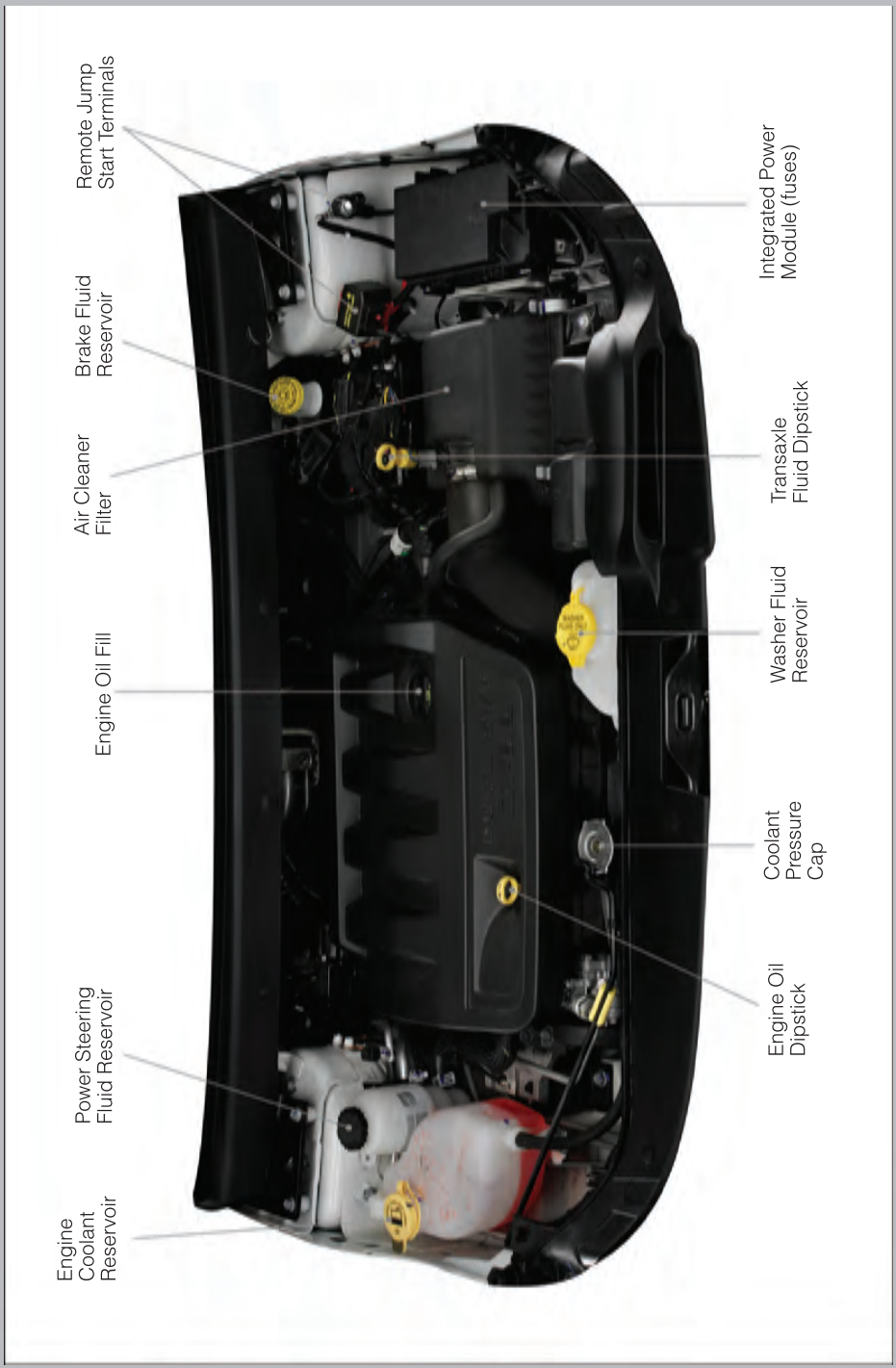

Downloaded from www.Manualslib.com manuals search engine

3.6L Engine

Downloaded from www.Manualslib.com manuals search engine

FLUIDS AND CAPACITIES

Component	Fluid, Lubricant, or Genuine Part	Capacities
Engine Coolant 2.4L Single or Dual-Zone Climate Control System.	MOPAR® Antifreeze/ Coolant Five Year/100,000 Mile Formula HOAT (Hybrid Organic Additive Technology) or equivalent.	10.7 Quarts (10.1 Liters) Includes heater and coolant recovery bottle filled to MAX level.
Engine Coolant 2.4L Three-Zone Climate Control System.	MOPAR® Antifreeze/ Coolant Five Year/100,000 Mile Formula HOAT (Hybrid Organic Additive Technology) or equivalent.	11.6 Quarts (11.0 Liters) Includes heater and coolant recovery bottle filled to MAX level.
Engine Coolant 3.6L Single or Dual-Zone Climate Control System.	MOPAR® Antifreeze/ Coolant Five Year/100,000 Mile Formula HOAT (Hybrid Organic Additive Technology) or equivalent.	13.1 Quarts (12.4 Liters) Includes heater and coolant recovery bottle filled to MAX level.
Engine Coolant 3.6L Three-Zone Climate Control System.	MOPAR® Antifreeze/ Coolant Five Year/100,000 Mile Formula HOAT (Hybrid Organic Additive Technology) or equivalent.	14.5 Quarts (13.7 Liters) Includes heater and coolant recovery bottle filled to MAX level.
Engine Oil with Filter 2.4L	API Certified SAE 5W-20 engine oil, meeting the requirements of Chrysler Material Standard MS-6395. Refer to the engine oil fill cap for correct SAE grade.	4.5 Quarts (4.26 Liters)
Engine Oil with Filter 3.6L	API Certified SAE 5W-30 engine oil, meeting Chrysler Material Standard MS-6395. Refer to your engine oil filler cap for correct SAE grade.	6 Quarts (5.6 Liters)
Fuel Selection All-Wheel Drive	87 Octane	21 Gallons (79.8 Liters) (Approximate)
Fuel Selection Front Wheel Drive (FWD) Models	87 Octane	20.5 Gallons (77.6 Liters) (Approximate)
Engine Oil Filter 2.4L, 3.6L	MOPAR® Engine Oil Filter or equivalent.	—
Spark Plugs 2.4L	ZFR5F-11 (Gap 0.044 in [1.12 mm])	—

Downloaded from www.Manualslib.com manuals search engine

Component	Fluid, Lubricant, or Genuine Part	Capacities
Spark Plugs 3.6L	RER8ZWYCB4 (Gap 0.043 in [1.1 mm])	—
Automatic Transmission	MOPAR® ATF+4® Automatic Transmission Fluid or equivalent licensed ATF+4® product.	—
Brake Master Cylinder	MOPAR® DOT 3 and SAE J1703 should be used or equivalent. If DOT 3 is not available, then DOT 4 is acceptable. Use only recommended brake fluids.	—
Power Steering Reservoir	MOPAR® Power Steering Fluid + 4 or MOPAR® ATF+4® Automatic Transmission Fluid or equivalent licensed ATF+4® product.	—
Power Transfer Unit (PTU)	MOPAR® Gear Lubricant 75W-90 or equivalent.	—
Rear Drive Assembly (RDA)	MOPAR® Gear Lubricant 75W-90 or equivalent.	—

Downloaded from www.Manualslib.com manuals search engine

MAINTENANCE CHART

Miles:	8,000	16,000	24,000	32,000	40,000	48,000	56,000	64,000	72,000	80,000	88,000	96,000	104,000
Or Months:	6	12	18	24	30	36	42	48	54	60	66	72	78
Or Kilometers:	13,000	26,000	39,000	52,000	65,000	78,000	91,000	104,000	117,000	130,000	143,000	156,000	169,000
Change the engine oil and filter.	X	X	X	X	X	X	X	X	X	X	X	X	X
Rotate the tires.	X	X	X	X	X	X	X	X	X	X	X	X	X
If using your vehicle for any of the following: dusty or off-road conditions. Inspect the engine air cleaner filter; replace if necessary.		X				X				X			
Replace the air conditioning filter (if equipped).		X		X		X		X		X		X	
Inspect the brake linings; replace if necessary.		X		X		X		X		X		X	
Inspect the CV joints.			X			X			X			X	
Inspect the exhaust system.		X	X			X			X			X	
Replace the engine air cleaner filter.				X				X				X	
Change the automatic transmission fluid and filter if using your vehicle for any of the following: police, taxi, fleet or frequent trailer towing.								X					
Inspect the front suspension, tie rod ends and boot seals for cracks or leaks and all parts for damage, wear, improper looseness or end play; replace if necessary.		X		X		X		X		X		X	
Replace the spark plugs (2.4L engine).				X				X				X	
Replace the spark plugs (3.6L engine).												X	
Flush and replace the engine coolant if not done 104,000 miles (173,000 km).										X			
Flush and replace the engine coolant if not done at 60 months.													X
Inspect and replace PCV Valve if necessary.												X	

- Refer to the Owner's Manual on the DVD for the complete maintenance schedule.

Downloaded from www.Manualslib.com manuals search engine

Maintenance Record

	Odometer	Date	Signature, Authorized Service Center
8,000 Miles (13,000 km) or 6 Months			
16,000 Miles (26,000 km) or 12 Months			
24,000 Miles (39,000 km) or 18 Months			
32,000 Miles (52,000 km) or 24 Months			
40,000 Miles (65,000 km) or 30 Months			
48,000 Miles (78,000 km) or 36 Months			
56,000 Miles (91,000 km) or 42 Months			
64,000 Miles (104,000 km) or 48 Months			
72,000 Miles (117,000 km) or 54 Months			
80,000 Miles (130,000 km) or 60 Months			
88,000 Miles (143,000 km) or 66 Months			
96,000 Miles (156,000 km) or 72 Months			
104,000 Miles (169,000 km) or 78 Months			

Downloaded from www.Manualslib.com manuals search engine

FUSES

Interior Fuses

- The interior fuse panel is located on the passenger side under the instrument panel.

Cavity	Cartridge Fuse	Mini-Fuse	Description
F100	30 Amp Pink		110V AC Inverter – If Equipped
F101		10 Amp Red	Interior Lights
F102		20 Amp Yellow	Cigar Lighter in Instrument Panel/Left Rear Power Outlet
F103		20 Amp Yellow	Power Outlet in Console Bin/Power Outlet in Rear of Console
F105		20 Amp Yellow	Heated Seats – If Equipped
F106		20 Amp Yellow	Rear Power Outlet
F107		10 Amp Red	Rear Camera – If Equipped
F108		15 Amp Blue	Instrument Panel
F109		10 Amp Red	Climate Control/HVAC
F110		10 Amp Red	Occupant Restraint Controller
F112		10 Amp Red	Spare
F114		20 Amp Yellow	Rear HVAC Blower/Motor
F115		20 Amp Yellow	Rear Wiper Motor
F116	30 Amp Pink		Rear Defroster (EBL)
F117		10 Amp Red	Heated Mirrors
F118		10 Amp Red	Occupant Restraint Controller
F119		10 Amp Red	Steering Column Control Module
F120		10 Amp Red	All Wheel Drive – If Equipped
F121		15 Amp Blue	Wireless Ignition Node
F122		25 Amp Natural	Driver Door Module
F123		25 Amp Natural	Passenger Door Module
F124		10 Amp Red	Mirrors
F125		10 Amp Red	Steering Column Control Module
F126		10 Amp Red	Audio Amplifier
F127		20 Amp Yellow	Trailer Tow – If Equipped
F128		15 Amp Blue	Radio
F129		15 Amp Blue	Video/DVD – If Equipped
F130		15 Amp Blue	Climate Control/Instrument Panel
F131		10 Amp Red	Passenger Assistance/Hands Free System – If Equipped
F132		10 Amp Red	Tire Pressure Module
F133		10 Amp Red	Spare

Downloaded from www.Manualslib.com manuals search engine

Underhood Fuses

- The power distribution center is located in the engine compartment.

Cavity	Cartridge Fuse	Mini-Fuse	Description
F101	60 Amp Yellow		Interior Power Distribution Center Rail
F102	60 Amp Yellow		Interior Power Distribution Center Rail
F103	60 Amp Yellow		Interior Power Distribution Center Rail
F105	60 Amp Yellow		Interior Power Distribution Center Rail Ignition Run Relay
F106	60 Amp Yellow		Interior Power Distribution Center Rail Run/Accessory Relays
F139	40 Amp Green		Climate Control System Blower
F140	30 Amp Pink		Power Locks
F141	40 Amp Green		Anti-Lock Brake System
F142	40 Amp Green		Glow Plugs – If Equipped
F143	40 Amp Green		Exterior Lights 1
F144	40 Amp Green		Exterior Lights 2
F145	30 Amp Pink		To Body Computer – Lamp
F146	30 Amp Pink		Spare
F147	30 Amp Pink		Spare
F148	40 Amp Green		Radiator Fan Motor
F149	30 Amp Pink		Starter Solenoid
F150		25 Amp Natural	Powertrain Control Modules
F151	30 Amp Pink		Headlamp Washer Motor – If Equipped
F152		25 Amp Natural	Diesel Fuel Heater – If Equipped
F153		20 Amp Yellow	Fuel Pump
F156		10 Amp Red	Brake/Electronic Stability Control Module
F157		10 Amp Red	Transfer Case Module – If Equipped
F158		10 Amp Red	Active Hood Module – If Equipped
F159		10 Amp Red	Spare
F160		20 Amp Yellow	Interior Lights
F161		20 Amp Yellow	Horn
F162	50 Amp Red		Cabin Heater #1/Vacuum Pump – If Equipped
F163	50 Amp Red		Cabin Heater #2 – If Equipped
F164		25 Amp Natural	Powertrain Auto Shutdown
F165		20 Amp Yellow	Powertrain Shutdown
F166		20 Amp Yellow	Spare
F167		30 Amp Green	Powertrain Shutdown
F168		10 Amp Red	Air Conditioner Clutch

Downloaded from www.Manualslib.com manuals search engine

Cavity	Cartridge Fuse	Mini-Fuse	Description
F169	40 Amp Green		Emissions – Partial Zero Emissions Vehicle Motor
F170		15 Amp Blue	Emissions – Partial Zero Emissions Vehicle Actuators
F172		20 Amp Yellow	Spare
F173		25 Amp Natural	Anti Lock Brake Valves
F174		20 Amp Yellow	Siren – If Equipped
F175		30 Amp Green	Spare
F176		10 Amp Red	Powertrain Control Modules
F177		20 Amp Yellow	All Wheel Drive Module – If Equipped
F178		25 Amp Natural	Sunroof – If Equipped
F179		10 Amp Red	Battery Sensor
F181	100 Amp Blue		Electrohydraulic Steering (EHPS) – If Equipped
F182	50 Amp Red		Cabin Heater #3 – If Equipped
F184	30 Amp Pink		Front Wiper Motor

TIRE PRESSURES

- Check the inflation pressure of each tire, including the spare tire, at least monthly and inflate to the recommended pressure for your vehicle.
- The tire pressures recommended for your vehicle are found on the "Tire and Loading Information" label located on the driver's side door opening.

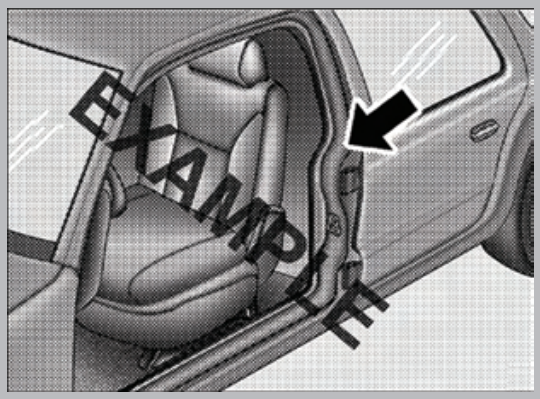

NOTE: Refer to the Owner's Manual on the DVD for more information regarding tire warnings and instructions.

WARNING!

- Overloading of your tires is dangerous. Overloading can cause tire failure, affect vehicle handling, and increase your stopping distance. Use tires of the recommended load capacity for your vehicle. Never overload them.

(Continued)

Downloaded from www.Manualslib.com manuals search engine

WARNING! *(Continued)*

- Improperly inflated tires are dangerous and can cause collisions. Under-inflation is the leading cause of tire failure and may result in severe cracking, component separation, or “blow out”. Over-inflation reduces a tire’s ability to cushion shock. Objects on the road and chuck holes can cause damage that results in tire failure. Unequal tire pressures can cause steering problems. You could lose control of your vehicle. Over-inflated or under-inflated tires can affect vehicle handling and can fail suddenly, resulting in loss of vehicle control.

WHEEL AND WHEEL TRIM CARE

- All wheels and wheel trim, especially aluminum and chrome plated wheels, should be cleaned regularly with a mild soap and water to prevent corrosion.
- To remove heavy soil and/or excessive brake dust, use MOPAR® Wheel Cleaner or equivalent or select a non-abrasive, non-acidic cleaner.

CAUTION!

Do not use scouring pads, steel wool, a bristle brush, or metal polishes. Do not use oven cleaner. These products may damage the wheel's protective finish. Avoid automatic car washes that use acidic solutions or harsh brushes that may damage the wheel's protective finish. Only MOPAR® Wheel Cleaner or equivalent is recommended.

Downloaded from www.Manualslib.com manuals search engine

EXTERIOR BULBS

LIGHT BULBS – Exterior	Bulb Number
Low Beam Headlamp	9006
High Beam Headlamp	9005
Front Park/Turn Signal	3757AK
Side Marker Lamp	168
Front Fog Lamp	PSX24W
Center High Mounted Stop Lamp (CHMSL)	LED (Serviced at Authorized Dealer)
License Lamp	168
LIGHTS BULBS – Rear (LED Version)	**Bulb Number**
Rear Tail/Stop Lamp	LED (Serviced at Authorized Dealer)
Rear Tail (Liftgate) Lamp	LED (Serviced at Authorized Dealer)
Rear Turn Signal Lamp	WY21W
Backup Lamp	W21W
LIGHTS BULBS – Rear (Bulb Version)	**Bulb Number**
Rear Tail/Stop Lamp	P27/7W
Rear Tail (Liftgate) Lamp	P27/7W
Rear Turn Signal Lamp	PY27/7W
Backup Lamp	P27/7W

Downloaded from www.Manualslib.com manuals search engine

CHRYSLER GROUP LLC CUSTOMER CENTER

P.O. Box 21–8004

Auburn Hills, MI 48321–8004

Phone: 1–800–423–6343

CHRYSLER CANADA INC. CUSTOMER CENTER

P.O. Box 1621

Windsor, Ontario N9A 4H6

Phone: 1–800–465–2001 (English)

Phone: 1–800–387–9983 (French)

ASSISTANCE FOR THE HEARING IMPAIRED

- To assist customers who have hearing difficulties, the manufacturer has installed special TDD (Telecommunication Devices for the Deaf) equipment at its customer center. Any hearing or speech impaired customer, who has access to a TDD or a conventional teletypewriter (TTY) in the United States, can communicate with the manufacturer by dialing 1–800–380–CHRY. Canadian residents with hearing difficulties that require assistance can use the special needs relay service offered by Bell Canada. For TTY teletypewriter users, dial 711 and for Voice callers, dial 1–800–855–0511 to connect with a Bell Relay Service operator.

WARNING!

Engine exhaust, some of its constituents, and certain vehicle components contain, or emit, chemicals known to the State of California to cause cancer and birth defects, or other reproductive harm. In addition, certain fluids contained in vehicles and certain products of component wear contain, or emit, chemicals known to the State of California to cause cancer and birth defects, or other reproductive harm.

PUBLICATIONS ORDERING

- **If you are the first registered retail owner of your vehicle,** you may obtain one free printed copy of the Owner's Manual, Warranty Booklet or Radio Manuals on your DVD by calling 1–800–423–6343 (U.S.) or 1–800–387–1143 (Canada) or by contacting your dealer.
- Replacement User Guide kits or DVDs or, if you prefer, additional printed copies of the Owner's Manual, Warranty Booklet or Radio Manuals may be purchased by visiting www.techauthority.com or by calling 1–800–890–4038 (U.S.) or 1–800–387–1143 (Canada). Visa, Master Card, American Express and Discover orders are accepted. If you prefer mailing your order, please call the above numbers for an order form.

NOTE: A street address is required when ordering manuals (no P.O. Boxes).

Downloaded from www.Manualslib.com manuals search engine

NOTE:

- The Owner's Manual and User Guide electronic files are also available on the Chrysler, Jeep, Ram Truck and Dodge websites.
- Click on the "For Owners" tab, select "Owner/Service Manuals", then select your desired model year and vehicle from the drop down lists.

REPORTING SAFETY DEFECTS IN THE 50 UNITED STATES AND WASHINGTON, D.C.

- If you believe that your vehicle has a defect that could cause a collision or cause injury or death, you should immediately inform the National Highway Traffic Safety Administration (NHTSA) in addition to notifying the manufacturer.
- If NHTSA receives similar complaints, it may open an investigation, and if it finds that a safety defect exists in a group of vehicles, it may order a recall and remedy campaign. However, NHTSA cannot become involved in individual problems between you, your authorized dealer, and the manufacturer.
- To contact NHTSA, you may either call the Auto Safety Hotline toll free at 1–888–327–4236 (TTY: 1–800–424– 9153), or go to http://www.safercar.gov; or write to: Administrator, NHTSA, 1200 New Jersey Avenue, SE., West Building, Washington, D.C. 20590. You can also obtain other information about motor vehicle safety from http://www.safercar.gov.

In Canada

- If you believe that your vehicle has a safety defect, you should contact the Customer Service Department immediately. Canadian customers who wish to report a safety defect to the Canadian government should contact Transport Canada, Motor Vehicle Defect Investigations and Recalls at 1-800-333-0510 or go to http://www.tc.gc.ca/roadsafety/
- French Canadian customers who wish to report a safety defect to the Canadian government should contact Transport Canada, Motor Vehicle Defect Investigations and Recalls at 1-800-333-0510 or go to http://www.tc.gc.ca/securiteroutiere/

Downloaded from www.Manualslib.com manuals search engine

AUTHENTIC ACCESSORIES BY MOPAR®

- The following highlights just some of the many Authentic Dodge Accessories by Mopar featuring a fit, finish, and functionality specifically for your Dodge Journey.
- In choosing Authentic Accessories you gain far more than expressive style, premium protection, or extreme entertainment, you also benefit from enhancing your vehicle with accessories that have been thoroughly tested and factory-approved.
- For the full line of Authentic Dodge Accessories by Mopar, visit your local Dodge dealership or online at mopar.com.

CHROME:

- Bodyside Moldings
- Fuel Filler Door
- Exhaust Tip

EXTERIOR:

- Fog Lights
- Sunroof Air Deflector
- Front Air Deflector
- Hitch Receiver
- Molded Splash Guards

INTERIOR:

- Premium Carpet Floor Mats
- Slush Mats
- Door Sill Guards

ELECTRONICS:

- Portable Navigation Systems
- Uconnect™ hands-free Communication with iPod® Integration
- Sirius Satellite Radio
- iPod® Adapter
- Remote Start
- DVD Rear Seat Video™

CARRIERS:

- Hitch-mount Bike Carrier
- Roof Mount Bike Carrier
- Roof Box Cargo Carrier
- Roof Mount Ski and Snowboard Carrier
- Roof Mount Water Sports Carrier
- Roof Mount Canoe Carrier

iPod® is a registered trademark of Apple, Inc.

Downloaded from www.Manualslib.com manuals search engine

INDEX

Air Conditioning 28
Airbag 13
Alarm, Panic 8
Arming Theft System (Security Alarm) 12
Audio Settings 37,39
Automatic Headlights 26
Automatic Temperature Control (ATC) 28
Automatic Transmission
  Fluid Type 89
Auxiliary Audio/Video Input Jacks . . 58
Axle Fluid 89

Back-Up Camera 31
Belts, Seat 12
Booster Seat 14
Brake Fluid 89
Break-In Recommendations, New Vehicle 25
Bulb Replacement 97

Calibration, Compass 59
Change Oil Indicator 71
Changing A Flat Tire 73
Child Booster Seat 14
Child Restraint 14
Child Restraint Tether Anchors 15
Climate Control 28
Clock Setting 37,39
Compass Calibration 59
Cooling System
  Coolant Capacity 89
Cruise Control (Speed Control) 27
Cruise Light 27
Customer Assistance 98
Customer Programmable Features 60,61

Defects, Reporting 99
Dimmer Control 26
Dimmer Switch, Headlight 26
Disarming, Theft System 12

Electronic Speed Control (Cruise Control) 27
Electronic Vehicle Information Center (EVIC) 59,60
Electronics
  Your Vehicle's Sound System 34
Emergency Key 8
Emergency, In Case of
  Freeing Vehicle When Stuck 84
  Jacking 73
  Overheating 72
Engine
  Break-In Recommendations 25
  Compartment 87
  Oil Selection 89
  Overheating 72
  Starting 10
  Stopping 10
Event Data Recorder 85
Exterior Lights 97

Fluid Capacities 89
Fluids 89
Fog Lights 26
Folding Front Passenger Seat 18
Folding Rear Seat 20
Freeing A Stuck Vehicle 84
Front Heated Seats 22
Fuel
  Specifications 89
Fuses 93

Garage Door Opener (HomeLink®) . . 61

Headlights 26
  Automatic 26
  Dimmer Switch 26
Heated Seats 22
HomeLink® (Garage Door Opener) Transmitter 61
Hood Release 86

Instrument Cluster 6
  Indicators 7
Instrument Cluster Warning Lights . 6,68
Interior Fuses 93
Intermittent Wipers (Delay Wipers) . . 25
Introduction 2
Inverter Outlet (115V) 63

Downloaded from www.Manualslib.com manuals search engine

INDEX

Inverter, Power 63

iPod®/USB/MP3 Control 50
  Bluetooth Streaming Audio 51

Jack Location 73
Jack Operation 73,76
Jacking Instructions 76
Jump Starting 80

Key Fob 8
Keyless Enter-N-Go 9
  Lock/Unlock 9,10
  Starting/Stopping 10

Lane Change Assist 25
LATCH (Lower Anchors and Tether for CHildren) 15
Lights
  Fuses 93
  Warning (Instrument Cluster Description) 6

Maintenance Record 92
Maintenance Schedule 91
MOPAR® Accessories 100

Navigation 46
New Vehicle Break-In Period 25

Oil Change Indicator 71
Oil, Engine
  Capacity 89
Outlet
  Power 64
Overheating, Engine 72

Panic Alarm 8
Phone (Uconnect) 51
Placard, Tire and Loading Information 95
Power
  Distribution Center (Fuses) 94
  Glass Sunroof 31
  Inverter 63
  Outlet (Auxiliary Electrical Outlet) . 64
  Seats 17
  Steering 89
Preparation for Jacking 73
Programmable Electronic Features . . 60

Radio Operation 40
Rain Sensitive Wiper System 25
Rear Camera 31
Rear Park Sense System 31
Rear Seat, Folding 20
Recreational Towing 67
Remote Starting System 8
Replacement Bulbs 97
Reporting Safety Defects 99
Restraints, Child 14
Rocking Vehicle When Stuck 84

Seat Belts 12
Seats 17
  Adjustment 18
  Folding Front Passenger 18
  Heated 22
  Lumbar Support 18
  Power 17
  Rear Folding 20
Setting the Clock 37,39
Shift Lever Override 82
Signals, Turn 25
SIRIUS Travel Link 49
Spare Tire 73
Spark Plugs 89
Speed Control
  Accel/Decel 27
  Cancel 27
  Resume 27
Speed Control (Cruise Control) 27
Starting
  Remote 8
Steering
  Tilt Column 24
Store Radio Presets 41
Stuck, Freeing 84
Sun Roof 31
Supplemental Restraint System - Airbag 13

Temperature Control, Automatic (ATC) 28

Downloaded from www.Manualslib.com manuals search engine

Temperature Gauge, Engine Coolant . 72
Theft Alarm (Security Alarm) 12
Theft System Arming 12
Theft System Disarming 12
Tilt Steering Column 24
Tires
  Air Pressure 95
  Changing 73
  Jacking 73
  Pressure Warning Light 68
  Spare Tire 73
Towing 66
  24-Hour Towing Assistance 68
  Disabled Vehicle 83
  Recreational 67
Towing Vehicle Behind a Motorhome . 67
Trailer Towing
  Trailer and Tongue Weight 66
Trailer Weight 66
Transmission
  Fluid 89
Turn Signals 25

Uconnect™ Phone 51
Uconnect™ Voice Command 56
Underhood Fuses 94
Universal Garage Door Opener
(HomeLink®) 61
USB Port 50

Video Entertainment System™
(Rear Seat Video System) 58
Voice Command 56

Washer
  Rear 26
Washers, Windshield 25
Wheel and Wheel Trim Care 96
Wind Buffeting 33
Windshield Washers 25
Windshield Wipers 25
Wiper, Rear 26

Downloaded from www.Manualslib.com manuals search engine

FREQUENTLY ASKED QUESTIONS

GETTING STARTED

- How do I install my LATCH Equipped Child Seat? pg. 15
- How do I move my rear seats? pg. 20

ELECTRONICS

- How do I know which radio I have? pg. 36
- How do I select the AUX music source? pg. 50
- How do I set the clock on my radio? pg. 39
- How do I use the Navigation feature? pg. 46
- How do I pair my cell phone via Bluetooth® with the UConnect™ Hands-Free Voice Activation System? pg. 51
- How do I hear the audio from my iPod® through the USB port using the radio? pg. 50
- How do I configure my Universal Garage Door Opener (HomeLink)? pg. 61

UTILITY

- How do I know how much I can tow with my Dodge Journey? pg. 66

WHAT TO DO IN EMERGENCIES

- What do I do if my TPMS warning light is blinking? pg. 68
- How do I change a flat tire? pg. 73
- How do I Jump-Start my vehicle? pg. 80

MAINTAINING YOUR VEHICLE

- Where is my Fuse Block located? pg. 93
- What type of oil do I use? pg. 89
- How often should I change my engine's oil? pg. 91
- What should my tire pressure be set at? pg. 95

Downloaded from www.Manualslib.com manuals search engine

If you are the first registered retail owner of your vehicle, you may obtain a complimentary printed copy of the Owner's Manual, Navigation/Media Center Manuals or Warranty Booklet by calling 1-800-423-6343 (U.S.) or 1-800-387-1143 (Canada) or by contacting your dealer.

The driver's primary responsibility is the safe operation of the vehicle. Driving while distracted can result in loss of vehicle control, resulting in a collision and personal injury. Chrysler Group LLC strongly recommends that the driver use extreme caution when using any device or feature that may take their attention off the road. Use of any electrical devices such as cell phones, computers, portable radios, vehicle navigation or other devices by the driver while the vehicle is moving is dangerous and could lead to a serious collision. Texting while driving is also dangerous and should never be done while the vehicle is moving. If you find yourself unable to devote your full attention to vehicle operation, pull off the road to a safe location and stop your vehicle. Some States or Provinces prohibit the use of cellular telephones or texting while driving. It is always the driver's responsibility to comply with all local laws.

IMPORTANT

This User Guide is intended to familiarize you with the important features of your vehicle. The DVD enclosed contains your Owner's Manual, Navigation/Media Center Manuals, Warranty Booklets, Tire Warranty and 24-Hour Towing Assistance (new vehicles purchased in the U.S.) or Roadside Assistance (new vehicles purchased in Canada) in electronic format. We hope you find it useful. Replacement DVD kits may be purchased by visiting www.techauthority.com. Copyright 2011 Chrysler Group LLC.

Downloaded from www.Manualslib.com manuals search engine

12JC49-926-AA
Journey

First Edition
User Guide

Download a FREE electronic copy
of the Owner's Manual or Warranty Booklet
by visiting the ***For Owner's tab*** at:

www.dodge.com (U.S.) or
www.dodge.ca (Canada).

DODGE

Downloaded from www.Manualslib.com manuals search engine