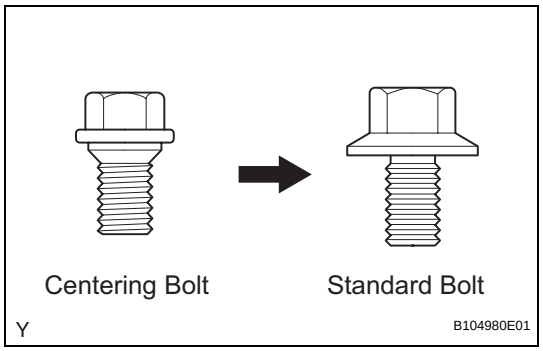

HOOD (for Sedan)

ADJUSTMENT

HINT:

- Centering bolts are used to mount the hood hinge and hood lock. The hood and hood lock cannot be adjusted with the centering bolts on. Substitute standard bolts (with washers) for the centering bolts when making adjustments.
- For bolts without torque specifications, check the standard bolt chart (see page SS-2).

1. INSPECT HOOD

(a) Check that the clearance measurements are within the standard ranges.

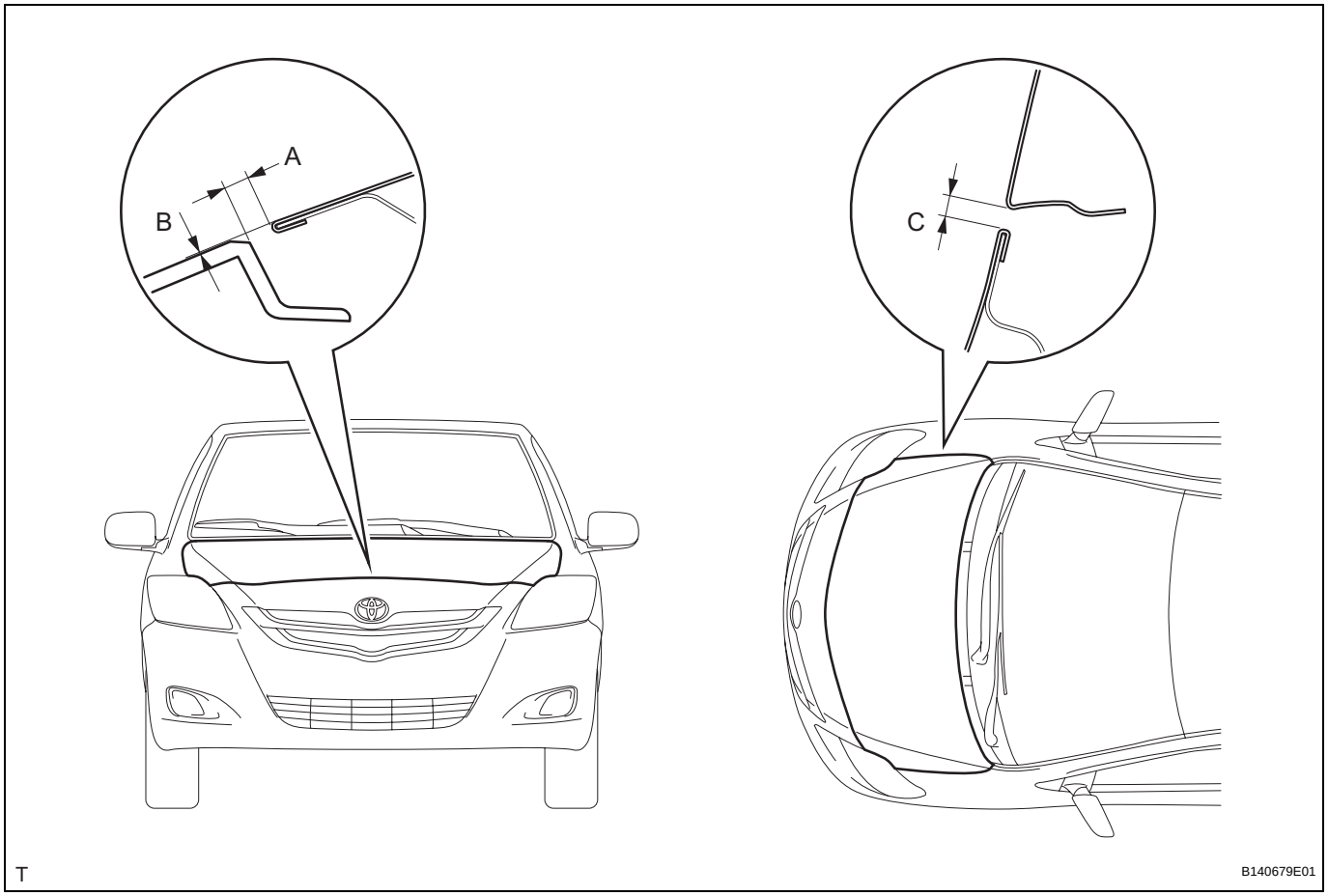

Standard

Area	Measurement	Area	Measurement
A	2.35 to 6.35 mm (0.092 to 0.250 in.)	C	2.0 to 5.0 mm (0.079 to 0.197 in.)
B	-2 to 2 mm (-0.079 to 0.079 in.)	-	-

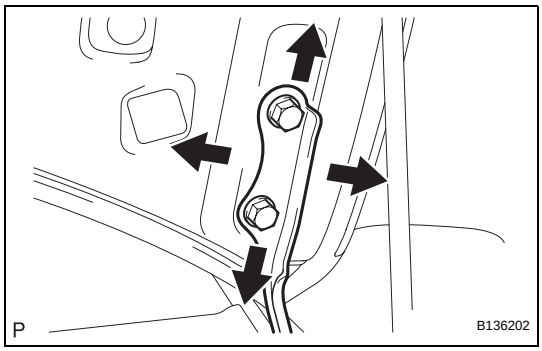

2. ADJUST HOOD

(a) Loosen the hood side hinge bolts.

(b) Move the hood to adjust the clearance to within the standard range.

(c) Tighten the hood side hinge bolts after the adjustment.
Torque: 13 N*m (133 kgf*cm, 10 ft.*lbf)

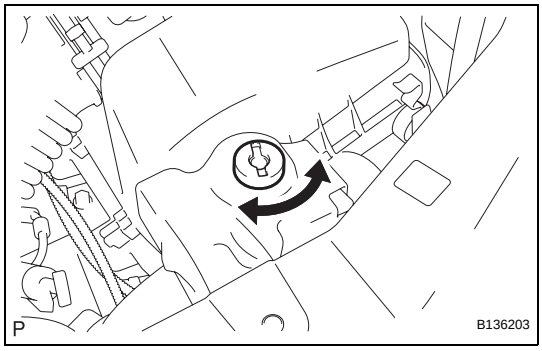

(d) Adjust the height of the hood front end by turning the cushion rubber.
HINT:
The cushion rubber can be raised and lowered by turning it.

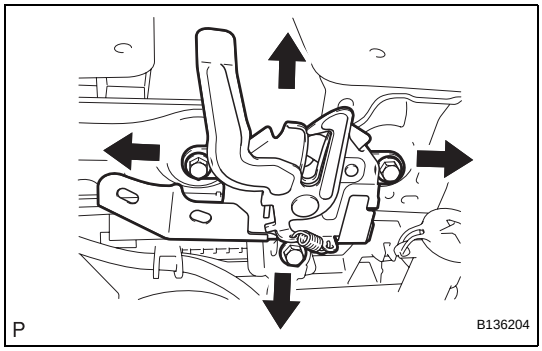

(e) Adjust the hood lock.
(1) Loosen the 3 bolts.
(2) Adjust the hood lock position so that the striker can enter it smoothly.
(3) Tighten the 3 bolts after the adjustment.
Torque: 7.5 N*m (76 kgf*cm, 66 in.*lbf)

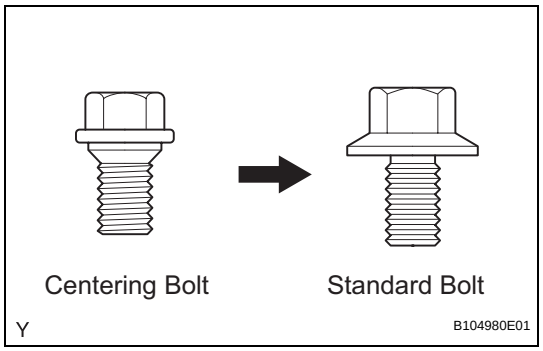

HOOD (for Hatchback)

ADJUSTMENT

HINT:

- Centering bolts are used to mount the hood hinge and hood lock. The hood and hood lock cannot be adjusted with the centering bolts on. Substitute standard bolts (with washers) for the centering bolts when making adjustments.
- For bolts without torque specifications, check the standard bolt chart.

1. INSPECT HOOD

(a) Check that the clearance measurements are within the standard ranges.

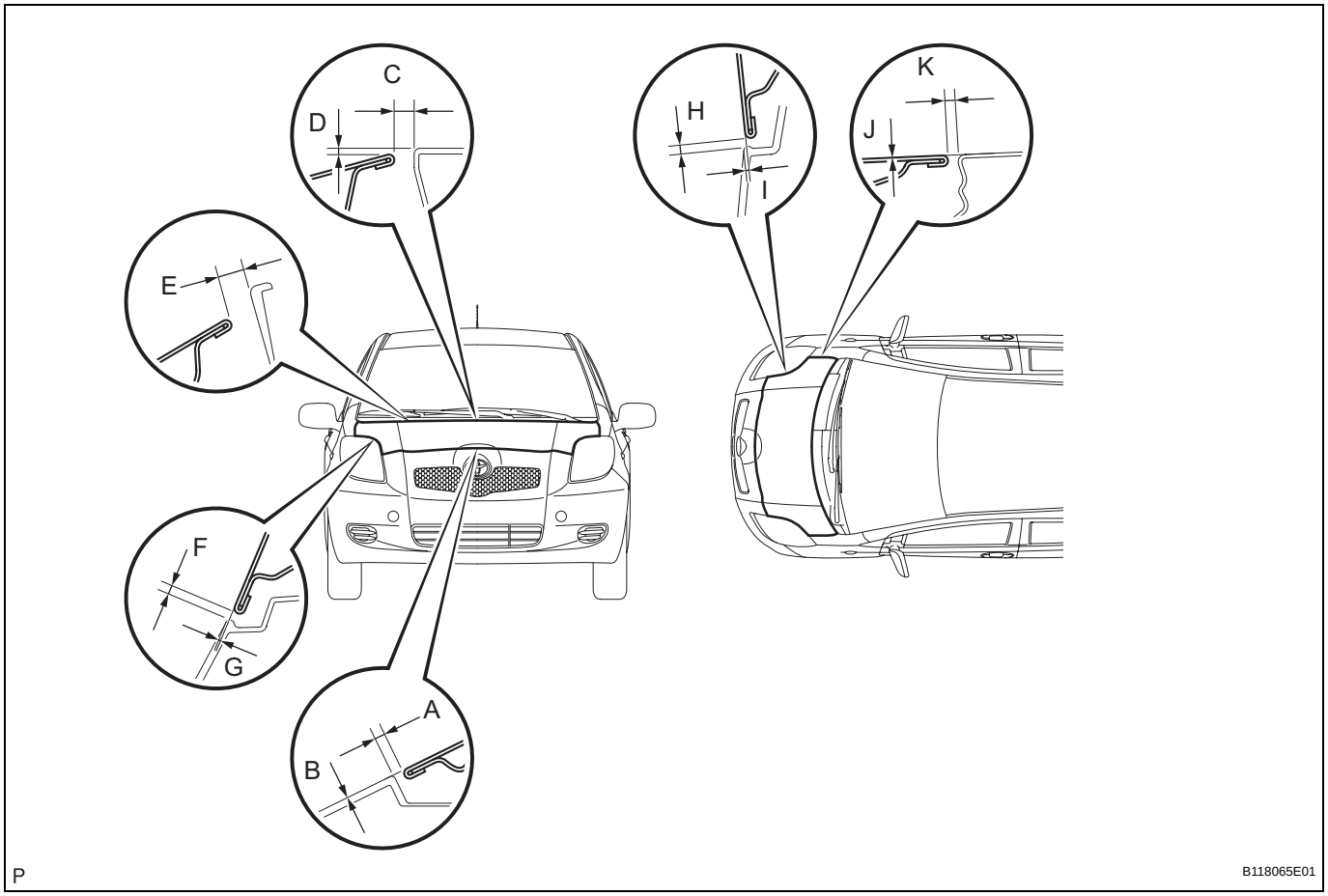

Standard

Area	Measurement	Area	Measurement
A	1.7 to 5.7 mm (0.067 to 0.224 in.)	G	-1.55 to 2.45 mm (-0.061 to 0.096 in.)
B	-2 to 2 mm (-0.079 to 0.079 in.)	H	1.75 to 5.75 mm (0.067 to 0.226 in.)
C	4.45 to 10.45 mm (0.175 to 0.411 in.)	I	-1.25 to 2.75 mm (-0.049 to 0.108 in.)
D	-0.95 to 5.05 mm (-0.037 to 0.199 in.)	J	-1.5 to 1.5 mm (-0.059 to 0.059 in.)
E	7.55 to 13.55 mm (0.297 to 0.533 in.)	K	2.0 to 5.0 mm (0.079 to 0.197 in.)

Area	Measurement	Area	Measurement
F	1.65 to 5.65 mm (0.065 to 0.222 in.)	-	-

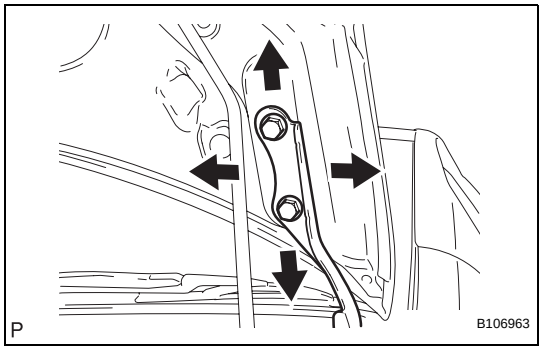

2. ADJUST HOOD

(a) Loosen the hood side hinge bolts.

(b) Move the hood to adjust the clearance to within the standard range.

(c) Tighten the hood side hinge bolts after the adjustment.
Torque: 13 N*m (133 kgf*cm, 10 ft.*lbf)

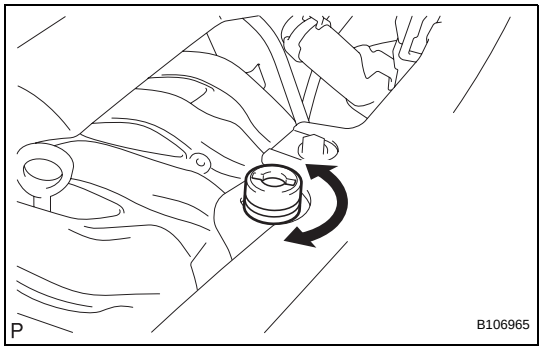

(d) Adjust the height of the hood front end by turning the cushion rubber.
HINT:
The cushion rubber can be raised and lowered by turning it.

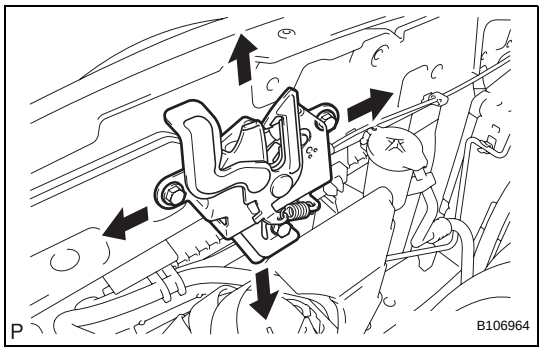

(e) Adjust the hood lock.
(1) Loosen the 3 bolts.
(2) Adjust the hood lock position so that the striker can enter it smoothly.
(3) Tighten the 3 bolts after the adjustment.
Torque: 7.5 N*m (76 kgf*cm, 66 in.*lbf)

FRONT DOOR (for Sedan)

COMPONENTS

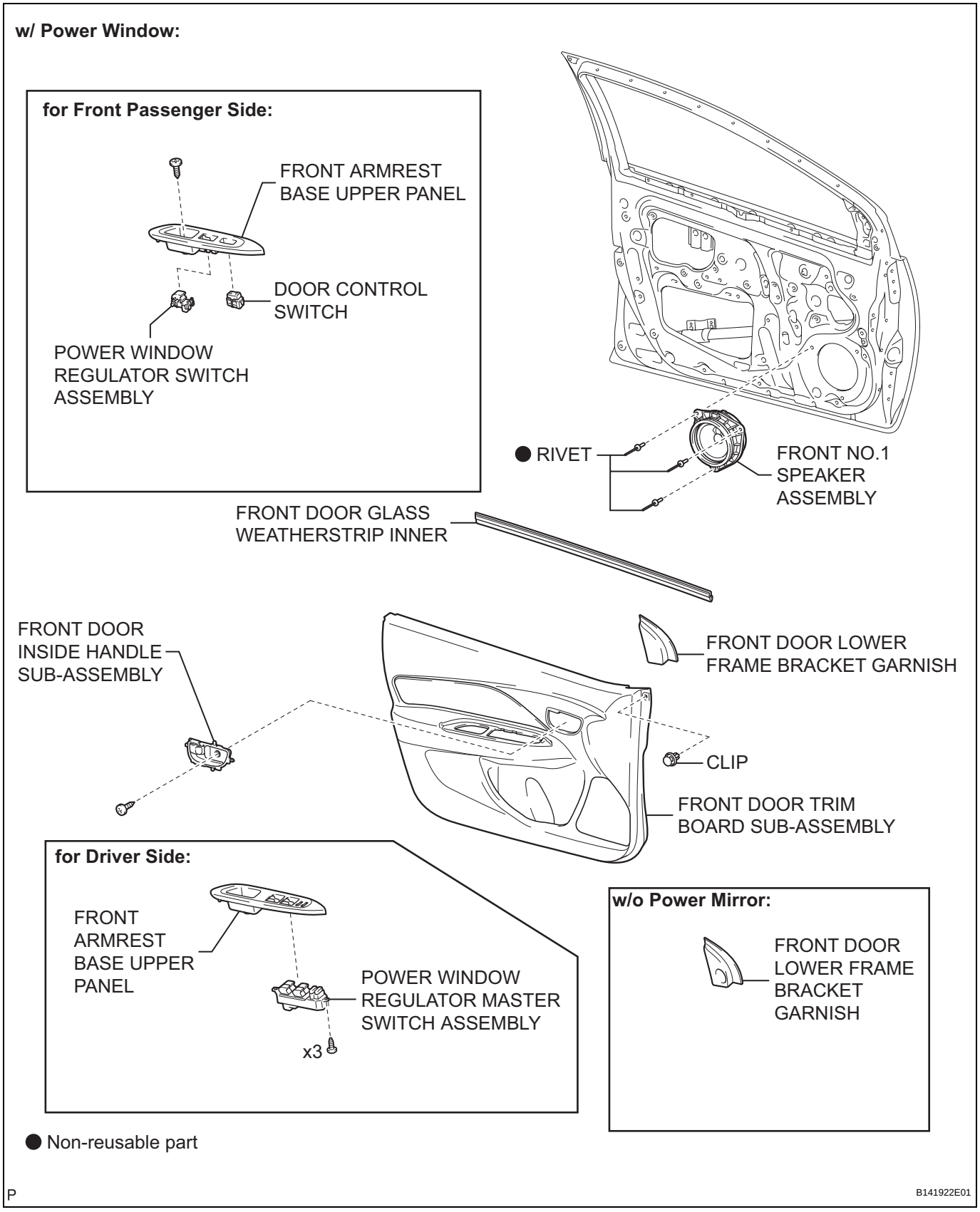

ED

w/o Power Window:

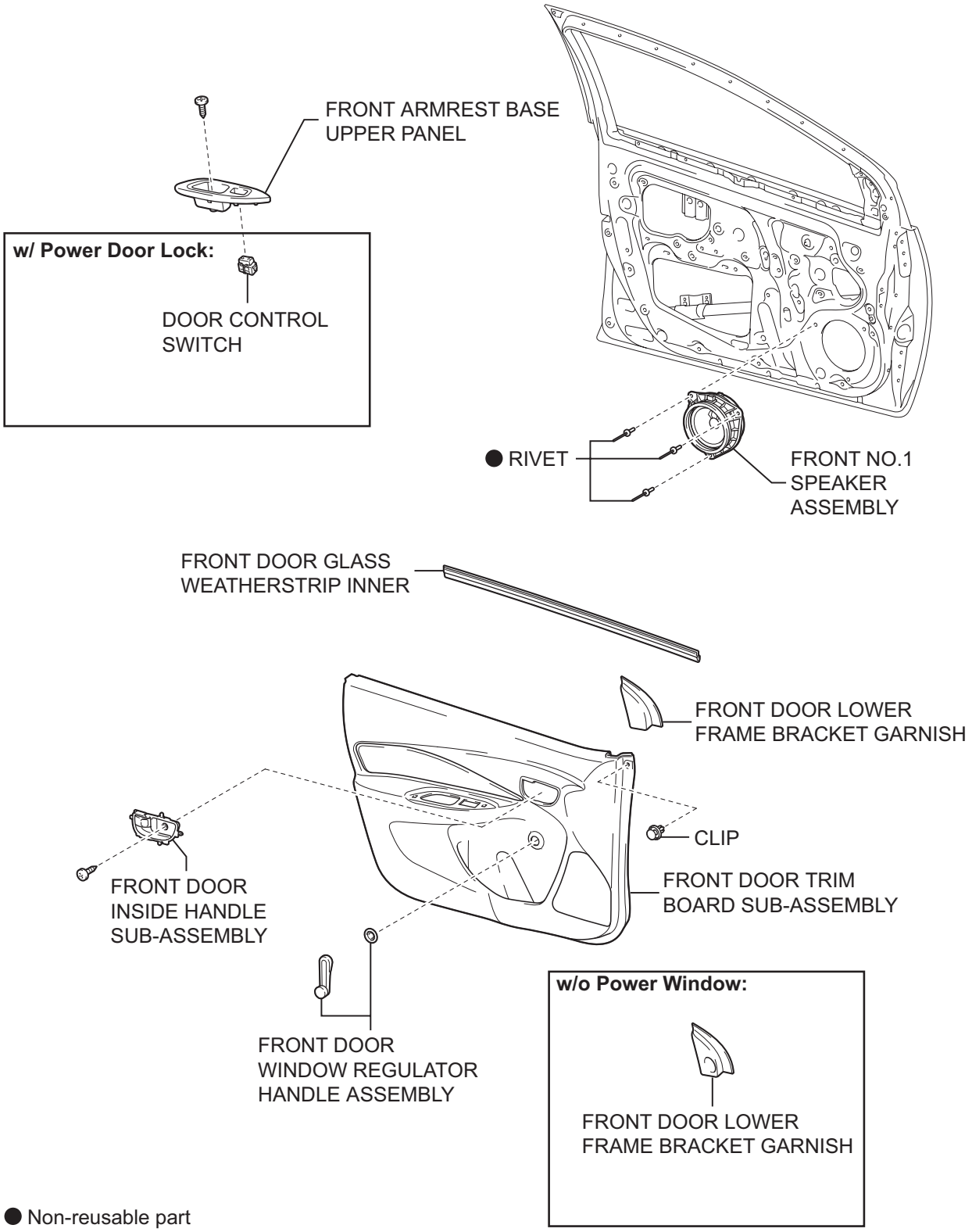

● Non-reusable part

P

B141923E01

ED

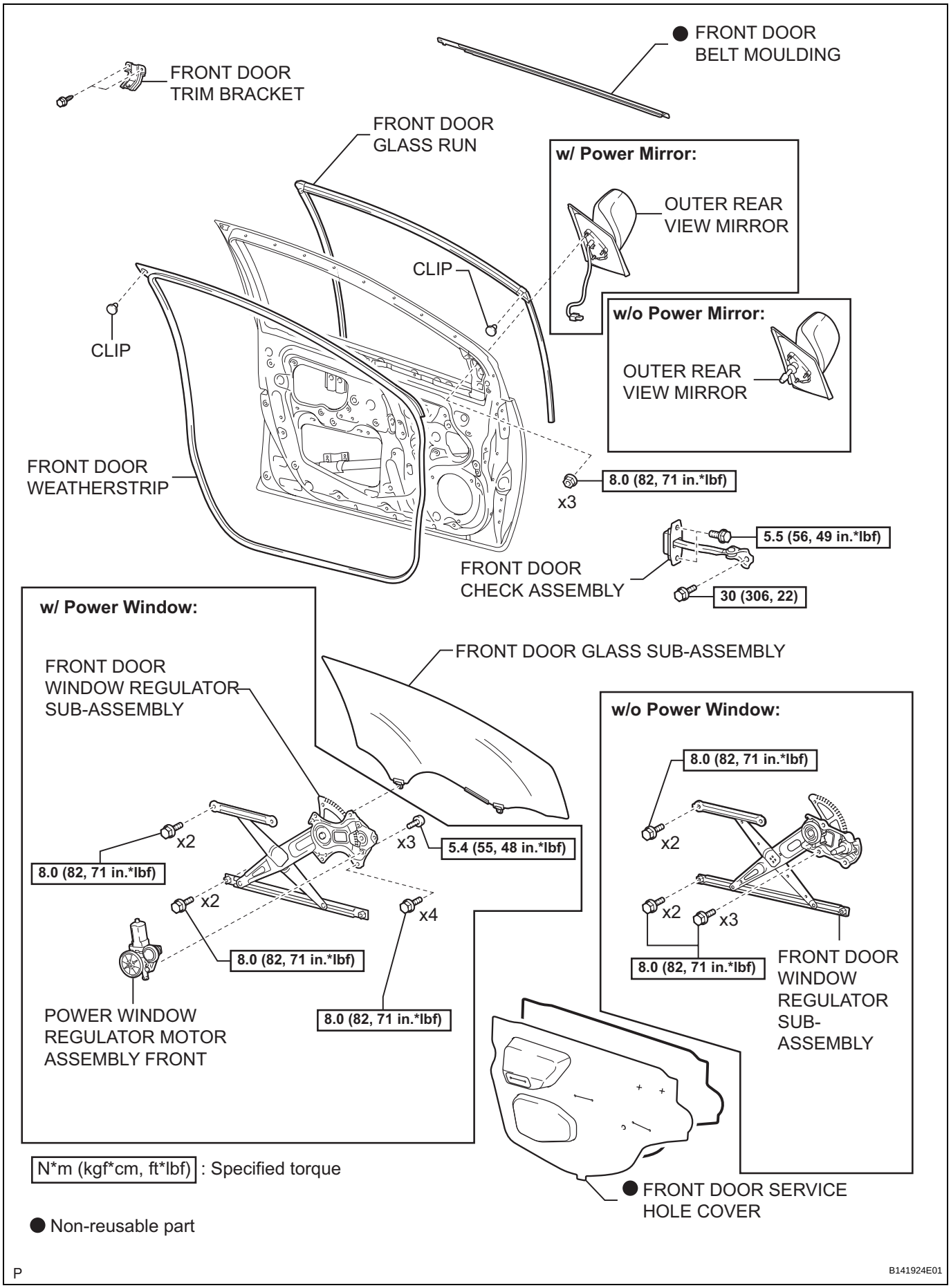
● FRONT DOOR BELT MOULDING
FRONT DOOR TRIM BRACKET
FRONT DOOR GLASS RUN
w/ Power Mirror:
OUTER REAR VIEW MIRROR
CLIP
CLIP
w/o Power Mirror:
OUTER REAR VIEW MIRROR
FRONT DOOR WEATHERSTRIP
8.0 (82, 71 in.*lbf)
x3
5.5 (56, 49 in.*lbf)
FRONT DOOR CHECK ASSEMBLY
30 (306, 22)
w/ Power Window:
FRONT DOOR GLASS SUB-ASSEMBLY
FRONT DOOR WINDOW REGULATOR SUB-ASSEMBLY
x2
8.0 (82, 71 in.*lbf)
x3
5.4 (55, 48 in.*lbf)
x2
x4
8.0 (82, 71 in.*lbf)
POWER WINDOW REGULATOR MOTOR ASSEMBLY FRONT
8.0 (82, 71 in.*lbf)
w/o Power Window:
8.0 (82, 71 in.*lbf)
x2
x2
x3
8.0 (82, 71 in.*lbf)
FRONT DOOR WINDOW REGULATOR SUB-ASSEMBLY
N*m (kgf*cm, ft*lbf) : Specified torque
● FRONT DOOR SERVICE HOLE COVER
● Non-reusable part
P
B141924E01

ED

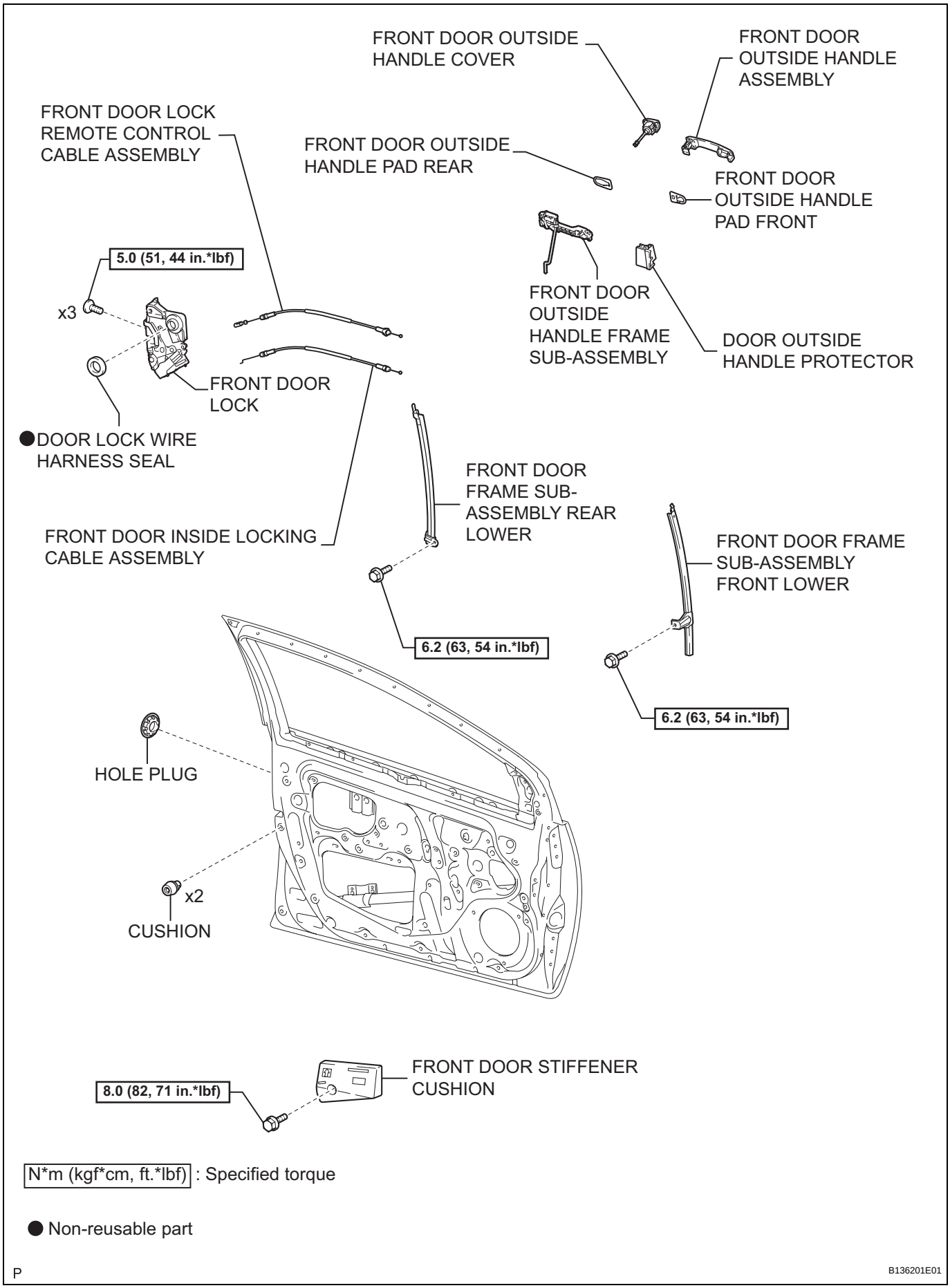

N*m (kgf*cm, ft.*lbf) : Specified torque

● Non-reusable part

P

B136201E01

ED

DISASSEMBLY

HINT:
- Use the same procedure for both the RH and LH sides.
- The procedure described below is for the LH side.

1. DISCONNECT CABLE FROM NEGATIVE BATTERY TERMINAL

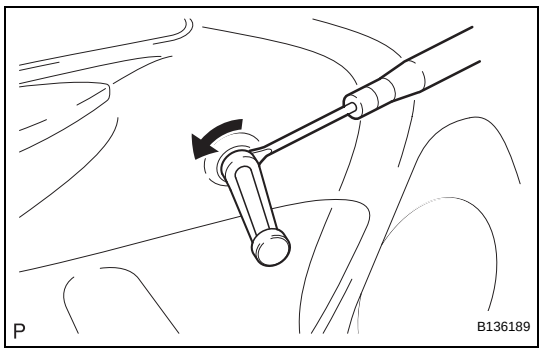

2. REMOVE FRONT DOOR WINDOW REGULATOR HANDLE ASSEMBLY (w/o Power Window)
(a) Insert a clip remover between the plate and door trim.
(b) Turn the handle with the clip remover inserted, as shown in the illustration.
(c) Remove the front door window regulator handle and clip.
(d) Remove the window regulator handle plate.

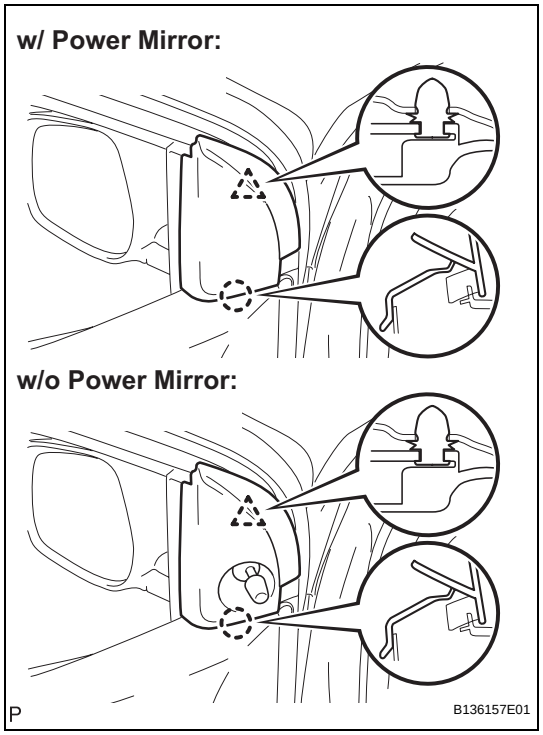

3. REMOVE FRONT DOOR LOWER FRAME BRACKET GARNISH
(a) Disengage the claw and clip and remove the front door lower frame bracket garnish.

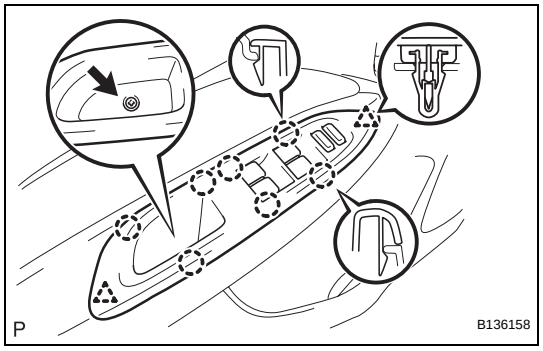

4. REMOVE FRONT ARMREST BASE UPPER PANEL
(a) for Driver side with power window:
(1) Remove the screw.
(2) Disengage the 7 claws and 2 clips and remove the front armrest base upper panel.
(3) Disconnect the connector.

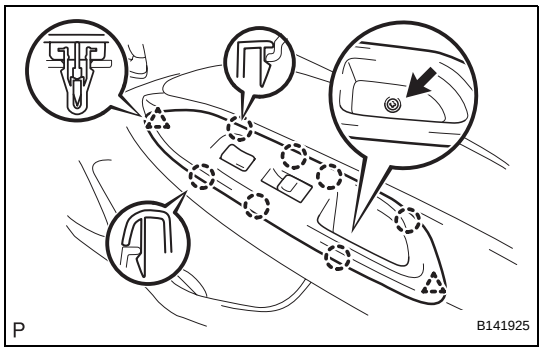

(b) for Front passenger side with power window:
  (1) Remove the screw.
  (2) Disengage the 7 claws and 2 clips and remove the front armrest base upper panel.
  (3) Disconnect the connector.

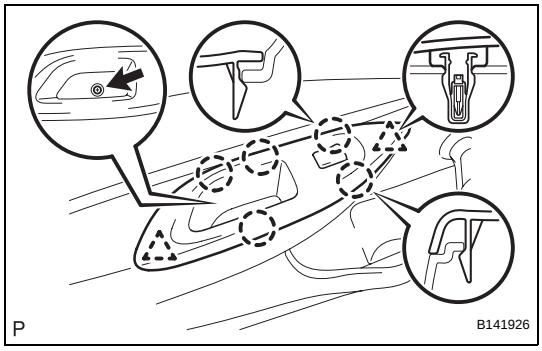

(c) w/o Power window:
  (1) Remove the screw.
  (2) Disengage the 5 claws and 2 clips and remove the front armrest base upper panel.

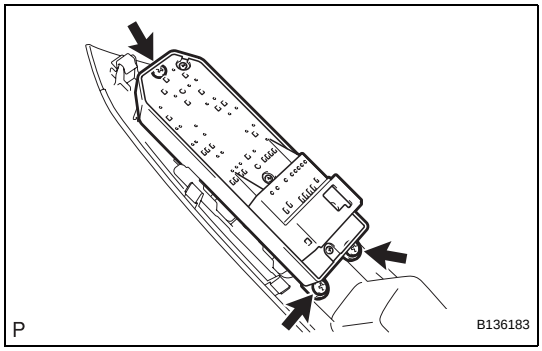

5. REMOVE POWER WINDOW REGULATOR MASTER SWITCH ASSEMBLY (w/ Power Window)

(a) Remove the 3 screws and the power window regulator master switch.

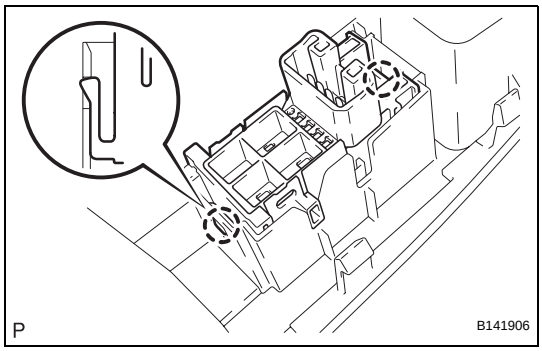

6. REMOVE POWER WINDOW REGULATOR SWITCH ASSEMBLY (w/ Power Window)

(a) Using a screwdriver with its tip wrapped in protective tape, disengage the 2 claws and remove the power window regulator switch.

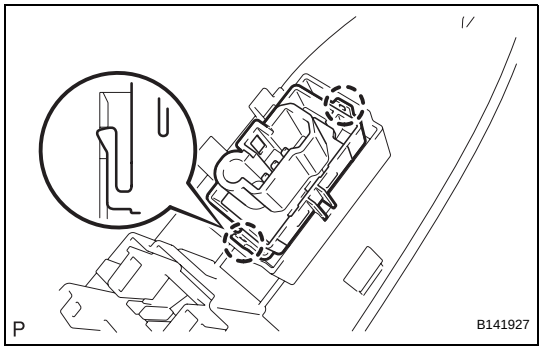

7. REMOVE DOOR CONTROL SWITCH (w/ Power Door Lock)

(a) Using a screwdriver with its tip wrapped in protective tape, disengage the 2 claws and remove the door control switch.

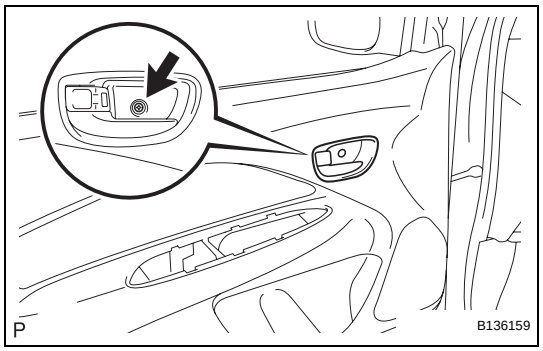

8. REMOVE FRONT DOOR TRIM BOARD SUB-ASSEMBLY

(a) w/ Power window:

(1) Remove the screw.

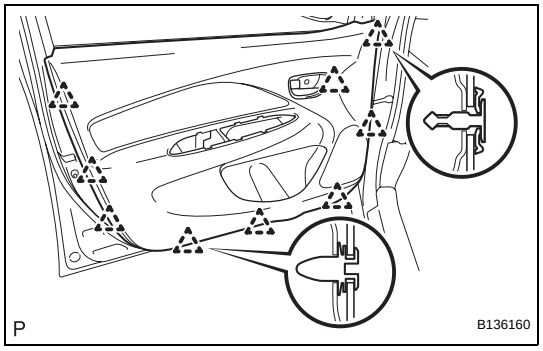

(2) Disengage the 9 clips.

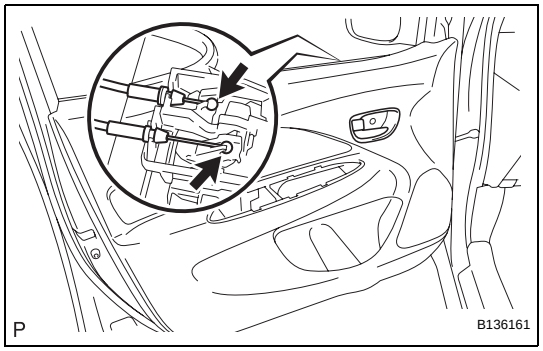

(3) Disconnect the front door lock remote control cable and front door inside locking cable and remove the front door trim board.

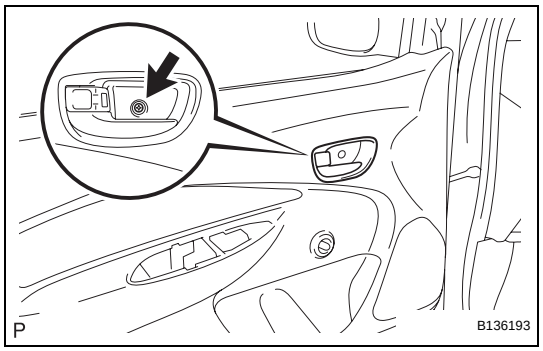

(b) w/o Power window:

(1) Remove the screw.

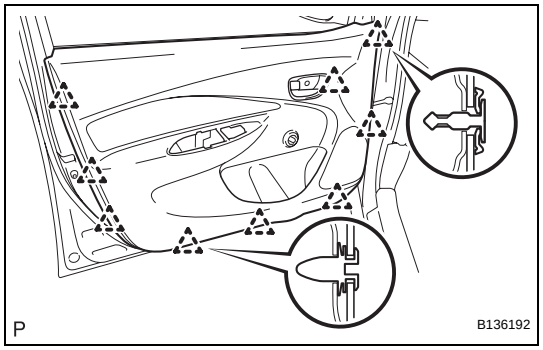

(2) Disengage the 9 clips.

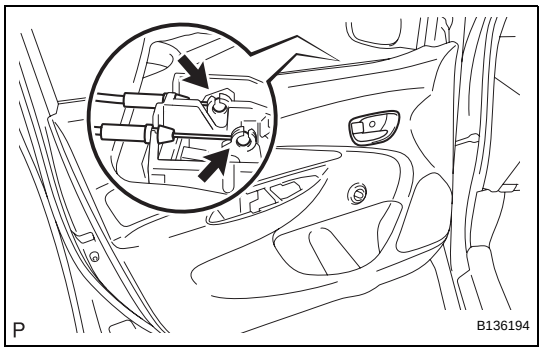

(3) Disconnect the front door lock remote control cable and front door inside locking cable and remove the front door trim board.

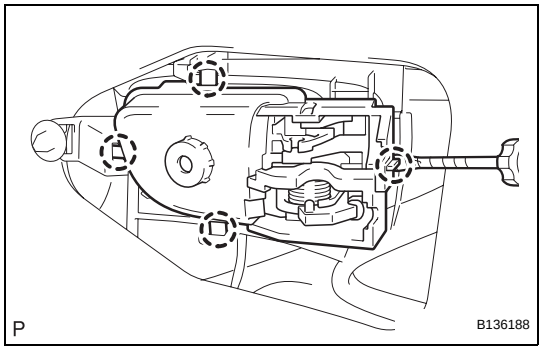

9. REMOVE FRONT DOOR INSIDE HANDLE SUB-ASSEMBLY

(a) Using a screwdriver with its tip wrapped in protective tape, disengage the 4 claws and remove the front door inside handle.

10. REMOVE FRONT DOOR GLASS WEATHERSTRIP INNER

(a) Remove the front door glass weatherstrip inner from the front door trim board.

11. REMOVE FRONT NO.1 SPEAKER ASSEMBLY (See page AV-164)

12. REMOVE OUTER REAR VIEW MIRROR (See page MI-8)

13. REMOVE FRONT DOOR BELT MOULDING (See page ET-85)

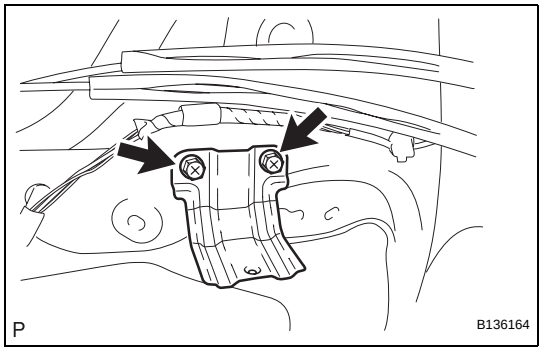

14. REMOVE FRONT DOOR TRIM BRACKET

(a) Remove the 2 screws and front door trim bracket.

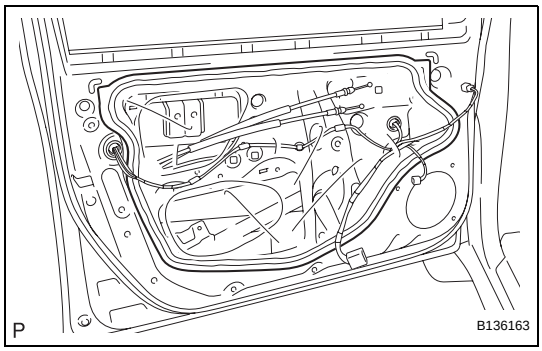

15. REMOVE FRONT DOOR SERVICE HOLE COVER

(a) Disconnect the connectors and clamps, then remove the front door service hole cover.
NOTICE:
Remove any tape remaining on the door side.

16. REMOVE FRONT DOOR GLASS SUB-ASSEMBLY

(a) w/ Power window:
(1) Driver side:
Provisionally install the power window regulator master switch.
(2) Passenger side:
Provisionally install the power window regulator switch.

(b) w/o Power window:
(1) Provisionally install the front door window regulator handle.

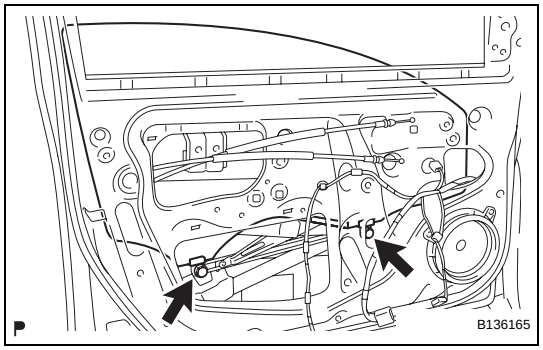

(c) Move the front door glass until the 2 bolts can be seen through the service holes.
(d) Remove the 2 bolts.
NOTICE:
Do not drop or damage the front door glass when removing the bolts.

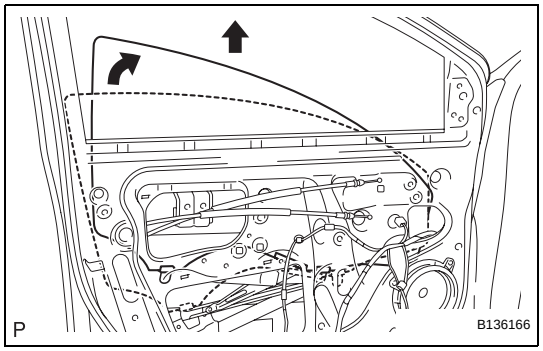

(e) Remove the front door glass in the direction indicated by the arrows in the illustration.
NOTICE:
Do not damage the glass.
(f) w/ Power window:
(1) Driver side:
Remove the power window regulator master switch.
(2) Passenger side:
Remove the power window regulator switch.
(g) w/o Power window:
(1) Remove the front door window regulator handle.

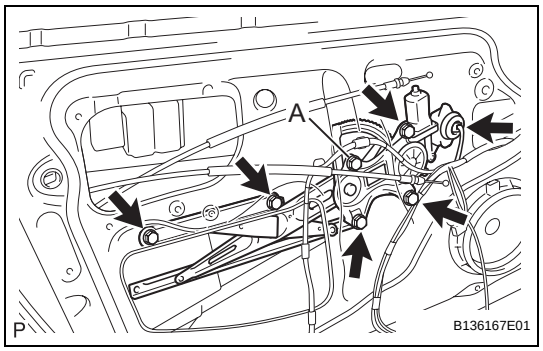

17. REMOVE FRONT DOOR WINDOW REGULATOR SUB-ASSEMBLY
(a) w/ Power window:
(1) Disconnect the connector.
(2) Loosen bolt A.
(3) Remove the 5 bolts, then remove the front door window regulator.
NOTICE:
Do not drop or damage the window regulator when removing the bolts.
HINT:
Remove the window regulator through the service hole.

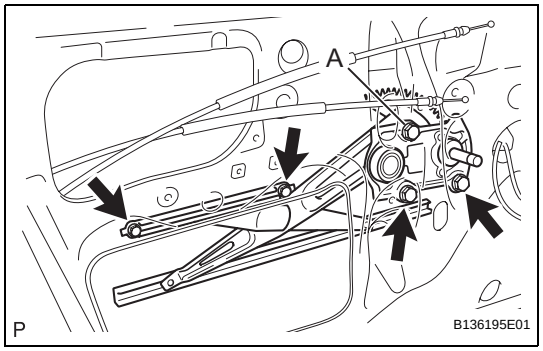

(b) w/o Power window:
(1) Loosen bolt A.
(2) Remove the 5 bolts, then remove the front door window regulator.
NOTICE:
Do not drop or damage the window regulator when removing the bolts.
HINT:
Remove the window regulator through the service hole.

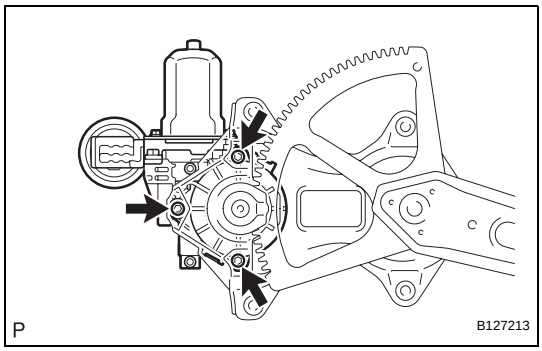

18. REMOVE POWER WINDOW REGULATOR MOTOR ASSEMBLY FRONT (w/ Power Window)

(a) Using "Torx" socket wrench T25, remove the 3 screws and power window regulator motor.

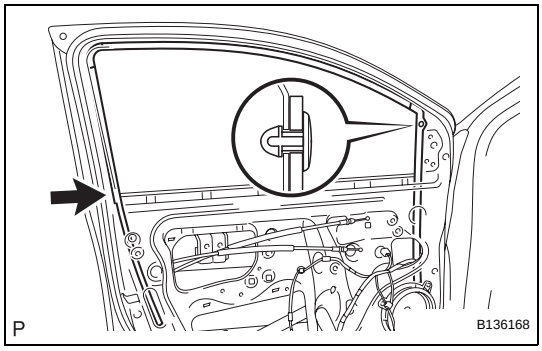

19. REMOVE FRONT DOOR GLASS RUN

(a) Disengage the clip, then remove the front door glass run.

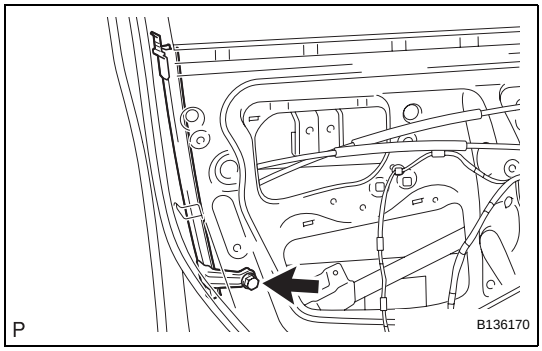

20. REMOVE FRONT DOOR FRAME SUB-ASSEMBLY REAR LOWER

(a) Remove the bolt, then remove the front door frame sub-assembly rear lower.

NOTICE:

Do not drop or damage the front door frame sub-assembly rear lower when removing the bolt.

HINT:

Remove the front door frame sub-assembly rear lower through the service hole.

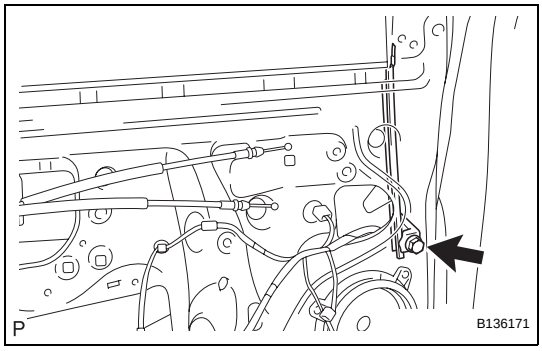

21. REMOVE FRONT DOOR FRAME SUB-ASSEMBLY FRONT LOWER

(a) Remove the bolt, then remove the front door frame sub-assembly front lower.

NOTICE:

Do not drop or damage the front door frame sub-assembly front lower when removing the bolts.

HINT:

Remove the front door frame sub-assembly front lower through the service hole.

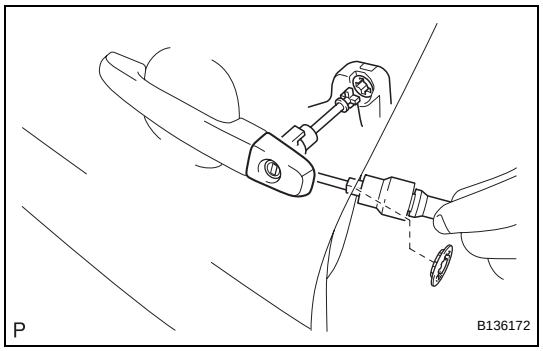

22. REMOVE FRONT DOOR OUTSIDE HANDLE COVER

(a) Remove the hole plug.

(b) Using "Torx" socket wrench T30, loosen the screw and remove the cover with the door lock key cylinder installed.

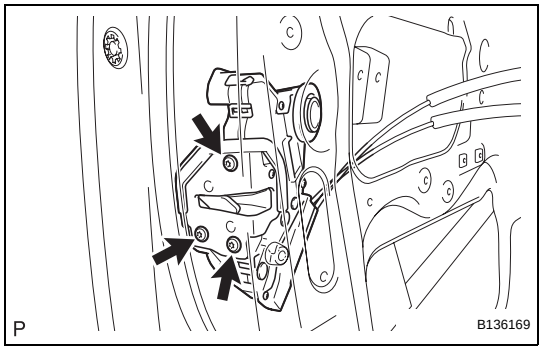

23. REMOVE FRONT DOOR LOCK

(a) Using "Torx" socket wrench T30, remove the 3 screws.

(b) Move the front door lock downward, remove the outside handle frame link and remove the front door lock.

NOTICE:

Do not drop or damage the front door lock when removing the screws.

HINT:

Remove the front door lock through the service hole.

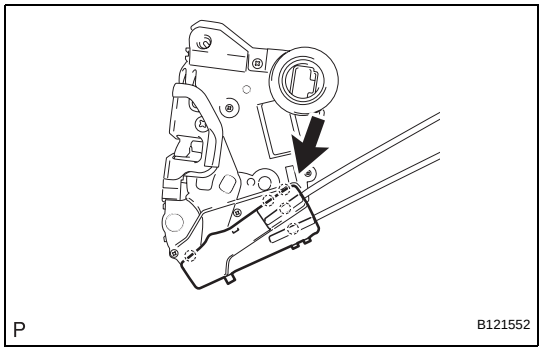

(c) Open the cover.

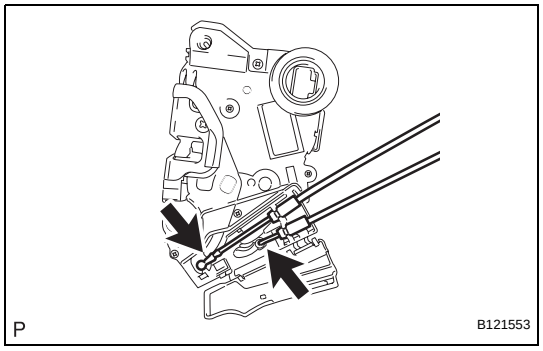

(d) Disconnect the front door lock remote control cable and front door inside locking cable.

(e) Remove the door lock wire harness seal.

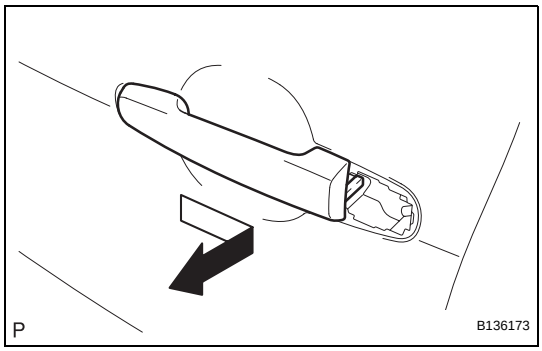

24. REMOVE FRONT DOOR OUTSIDE HANDLE ASSEMBLY

(a) Remove the handle by sliding and pulling it in the direction indicated by the arrow mark in the illustration.

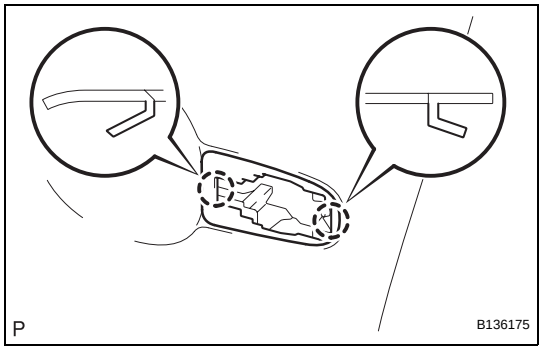

25. REMOVE FRONT DOOR OUTSIDE HANDLE PAD REAR

(a) Disengage the 2 claws and remove the front door outside handle pad rear.

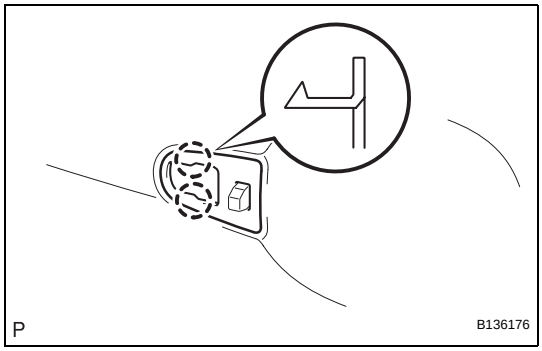

26. REMOVE FRONT DOOR OUTSIDE HANDLE PAD FRONT

(a) Disengage the 2 claws and remove the front door outside handle pad front.

ED

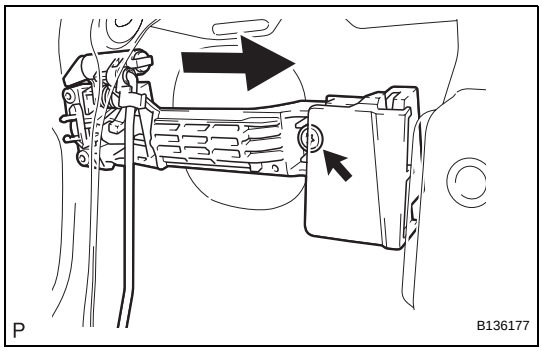

27. REMOVE FRONT DOOR OUTSIDE HANDLE FRAME SUB-ASSEMBLY

(a) Using "Torx" socket wrench T30, loosen the screw.
(b) Slide the front outside handle frame to remove it.

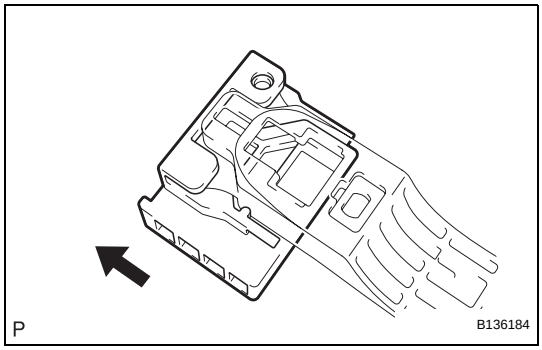

28. REMOVE DOOR OUTSIDE HANDLE PROTECTOR

(a) Slide the door outside handle protector to remove it.

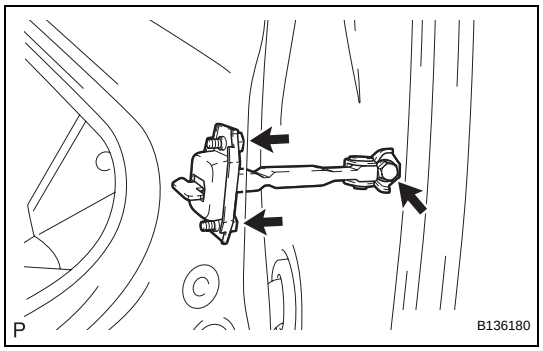

29. REMOVE FRONT DOOR CHECK ASSEMBLY

(a) Remove the 3 bolts, then remove the front door check.

NOTICE:

Do not drop or damage the door check when removing the bolts.

HINT:

Remove the door check through the service hole.

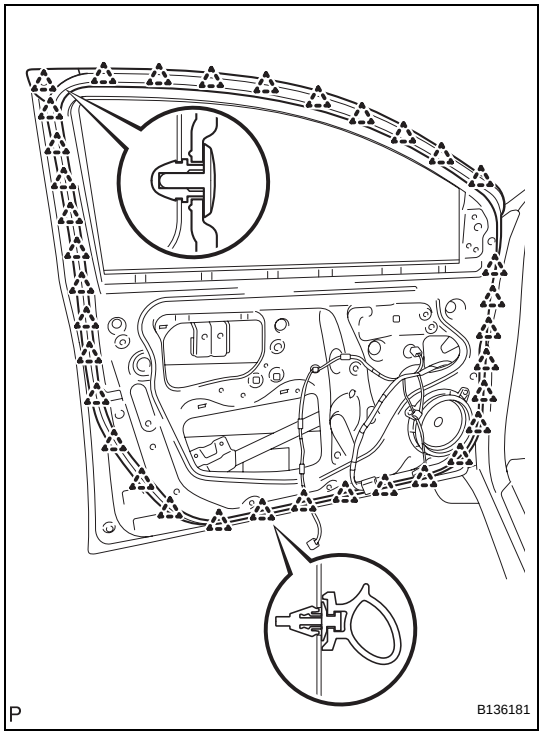

30. REMOVE FRONT DOOR WEATHERSTRIP

(a) Disengage the 35 clips and remove the front door weatherstrip.

NOTICE:

Remove any tape remaining on the door side.

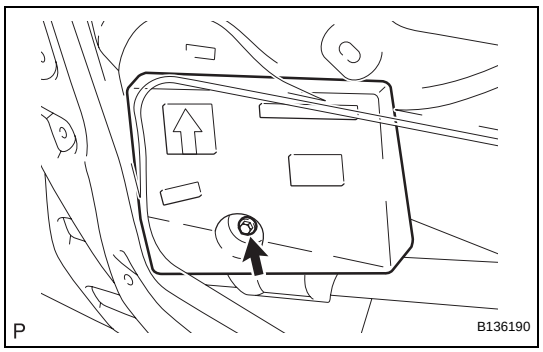

31. REMOVE FRONT DOOR STIFFENER CUSHION

(a) Remove the bolt and front door stiffener cushion.

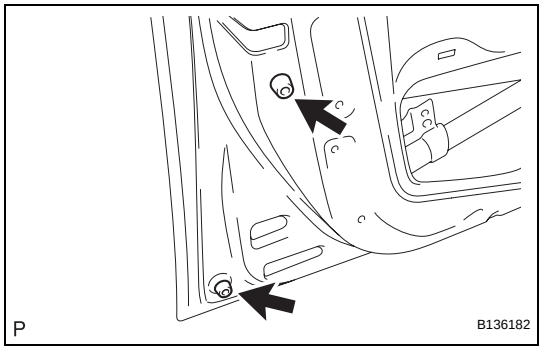

32. REMOVE CUSHION

(a) Remove the 2 cushions from the door panel.

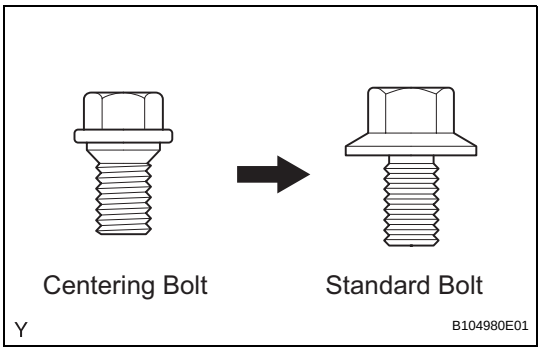

ADJUSTMENT

HINT:

- Before adjusting the door position on vehicles equipped with side airbags and curtain shield airbags, be sure to disconnect the battery. After the adjustment, inspect the SRS warning light, the side airbag system and the curtain shield airbag system for normal operation. Then initialize both airbag systems.
- Use the same procedure for the RH and LH sides.
- The procedures described below are for the LH side.
- Centering bolts are used to mount the door hinge onto the vehicle body and door. The door cannot be adjusted with the centering bolts on. Substitute standard bolts (with washers) for the centering bolts when making adjustments.
- For bolts without torque specifications, check the standard bolt chart (see page SS-2).

1. INSPECT FRONT DOOR

(a) Check that the clearance measurements are within the standard ranges.

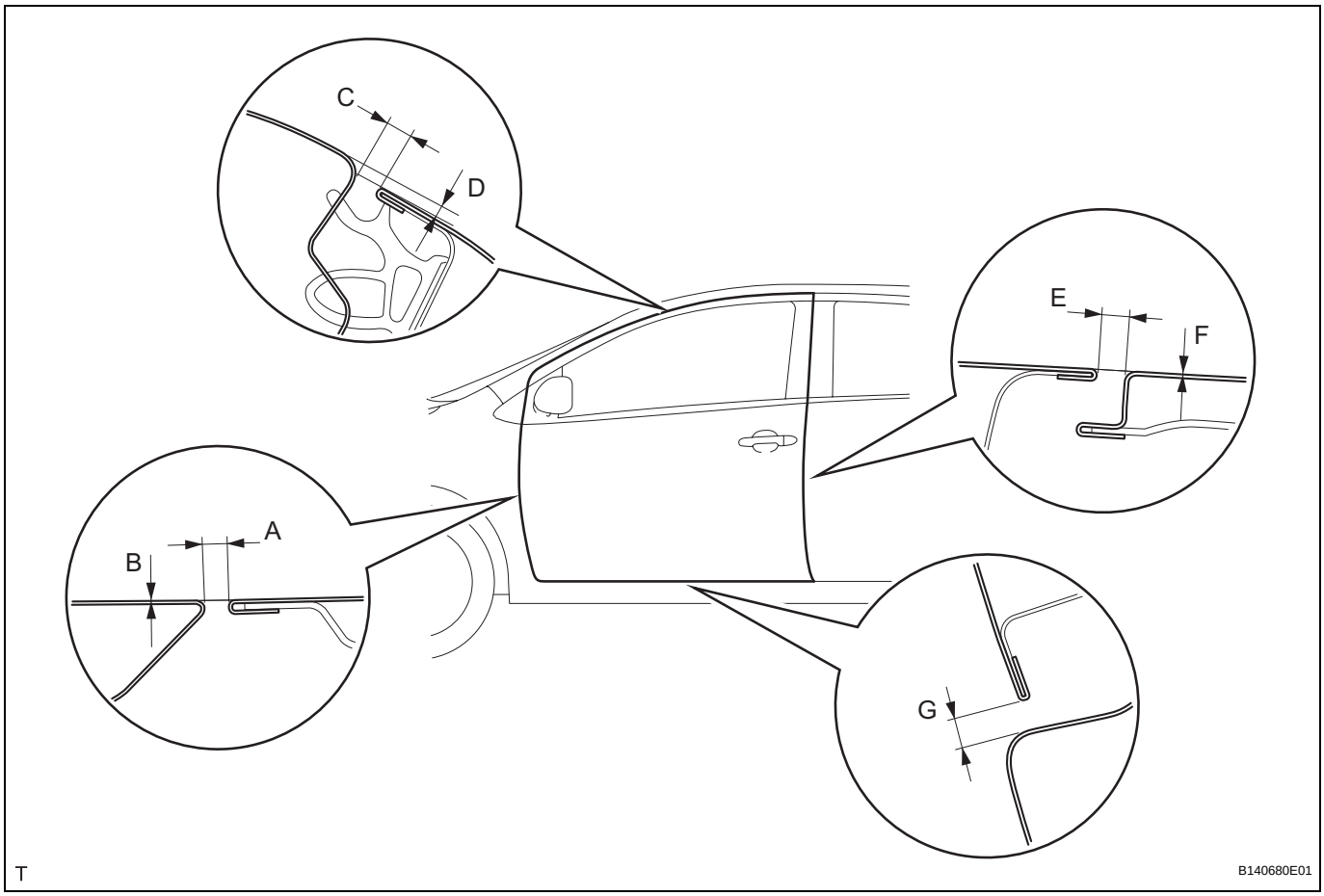

Standard

Area	Measurement	Area	Measurement
A	**2.5 to 5.5 mm (0.098 to 0.217 in.)**	**E**	**3.3 to 6.3 mm (0.130 to 0.248 in.)**
B	**-1.5 to 1.5 mm (-0.059 to 0.059 in.)**	**F**	**-1.5 to 1.5 mm (-0.059 to 0.059 in.)**

Area	Measurement	Area	Measurement
C	3.2 to 6.2 mm (0.126 to 0.244 in.)	G	4.2 to 7.2 mm (0.165 to 0.283 in.)
D	1.3 to 4.3 mm (0.051 to 0.169 in.)	-	-

2. ADJUST FRONT DOOR

(a) Disconnect the cable from the negative battery terminal.
Wait for at least 90 seconds after disconnecting the cable to prevent the airbag from working.

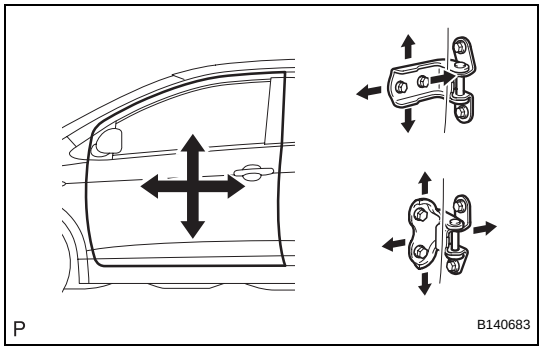

(b) Using SST, adjust the door horizontally and vertically by loosening the body side hinge bolts.
SST 09812-00010

(c) Tighten the body side hinge bolts after the adjustment.
Torque: 26 N*m (265 kgf*cm, 19 ft.*lbf)

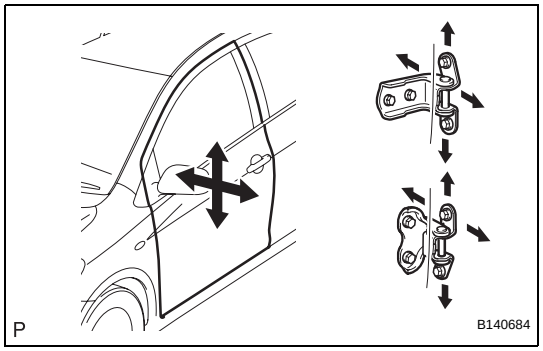

(d) Adjust the door horizontally and vertically by loosening the door side hinge bolts.

(e) Tighten the door side hinge bolts after the adjustment.
Torque: 26 N*m (265 kgf*cm, 19 ft.*lbf)

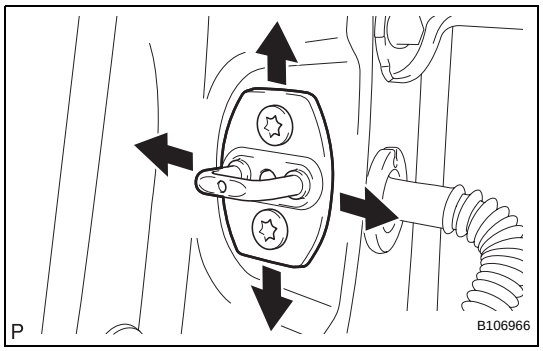

(f) Using "Torx" socket wrench T40, adjust the striker position by slightly loosening the striker mounting screws and hitting the striker with a plastic-faced hammer.

(g) Using "Torx" socket wrench T40, tighten the striker mounting screws after the adjustment.
Torque: 23 N*m (235 kgf*cm, 17 ft.*lbf)

(h) Connect the cable to the negative battery terminal.
Torque: 5.4 N*m (55 kgf*cm, 48 in.*lbf)

ED

REASSEMBLY

1. INSTALL CUSHION

(a) Install the 2 cushions onto the door panel.

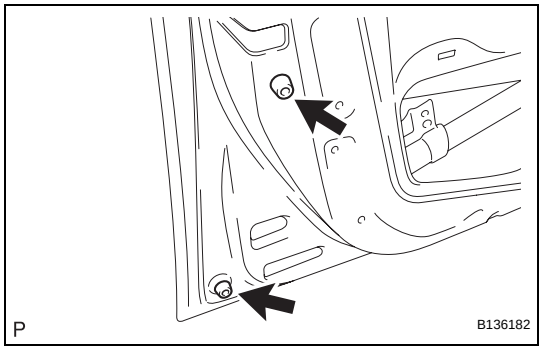

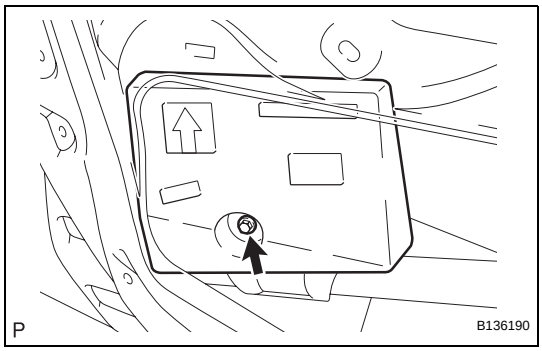

2. INSTALL FRONT DOOR STIFFENER CUSHION

(a) Install the front door stiffener cushion with the bolt.
Torque: 8.0 N*m (82 kgf*cm, 71 in.*lbf)

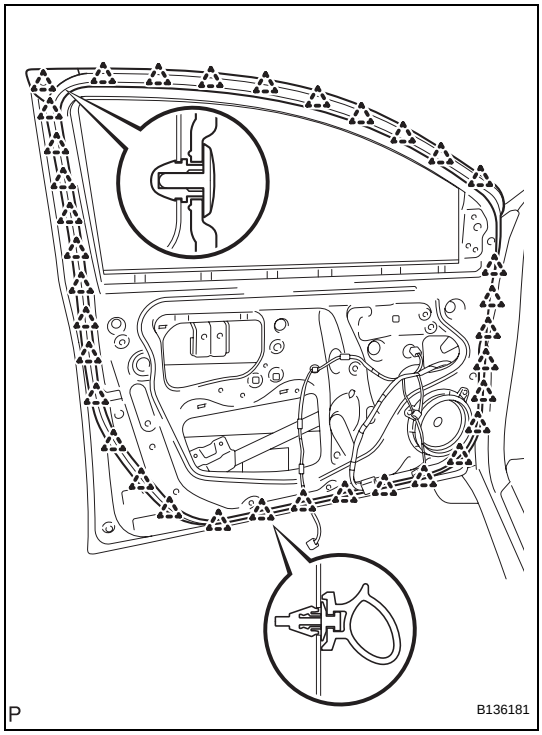

3. INSTALL FRONT DOOR WEATHERSTRIP

(a) Engage the 35 clips and install the front door weatherstrip.

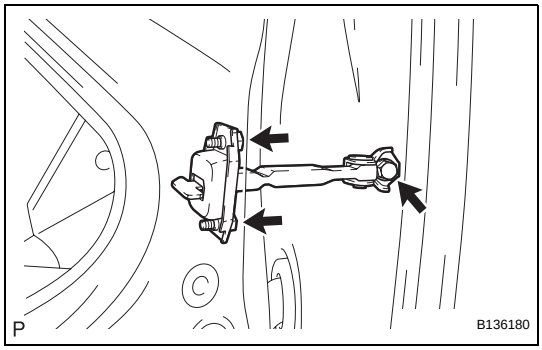

4. INSTALL FRONT DOOR CHECK ASSEMBLY

(a) Apply MP grease to the sliding areas of the door check.

(b) Install the front door check onto the door panel with the 2 bolts.
Torque: 5.5 N*m (56 kgf*cm, 49 in.*lbf)

(c) Apply adhesive to the threads of the bolt.
Adhesive:
Toyota Genuine Adhesive 1324, Three Bond 1324 or the equivalent.

(d) Install the front door check onto the body panel with the bolt.
Torque: 30 N*m (306 kgf*cm, 22 ft.*lbf)

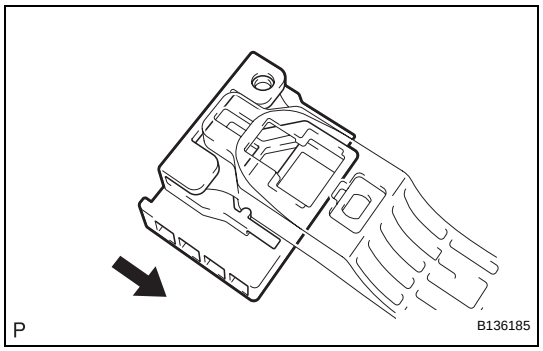

5. INSTALL DOOR OUTSIDE HANDLE PROTECTOR

(a) Slide the door outside handle protector to install it.

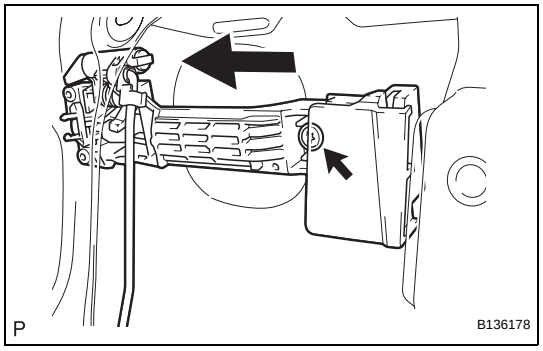

6. INSTALL FRONT DOOR OUTSIDE HANDLE FRAME SUB-ASSEMBLY

(a) Using "Torx" socket wrench T30, install the front outside handle frame with the screw.
Torque: 4.0 N*m (41 kgf*cm, 35 in.*lbf)

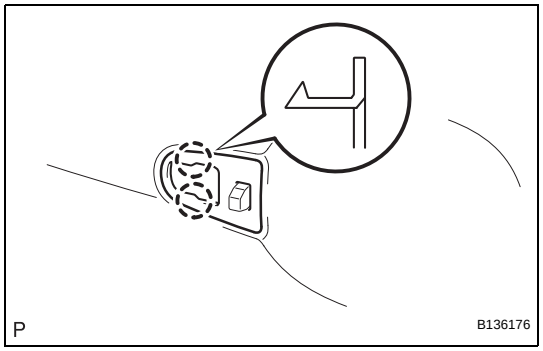

7. INSTALL FRONT DOOR OUTSIDE HANDLE PAD FRONT

(a) Engage the 2 claws and install the front door outside handle pad front.

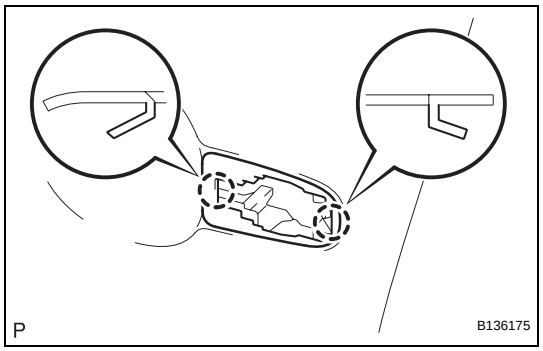

8. INSTALL FRONT DOOR OUTSIDE HANDLE PAD REAR

(a) Engage the 2 claws and install the front door outside handle pad rear.

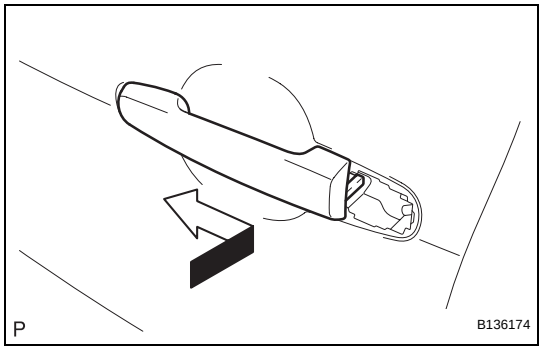

9. INSTALL FRONT DOOR OUTSIDE HANDLE ASSEMBLY

(a) Pushing the front door outside handle in the direction of the arrow mark shown in the illustration, install the front door outside handle.

10. INSTALL FRONT DOOR LOCK

NOTICE:

- **If reusing a door lock that has been removed, replace the packing in the connecting part with new.**

- **Make sure that no grease or dirt adheres to the packing surface in the connecting part.**

(a) Apply MP grease to the sliding and rotating areas of the front door lock.

(b) Connect the front door lock remote control cable and front door inside locking cable.

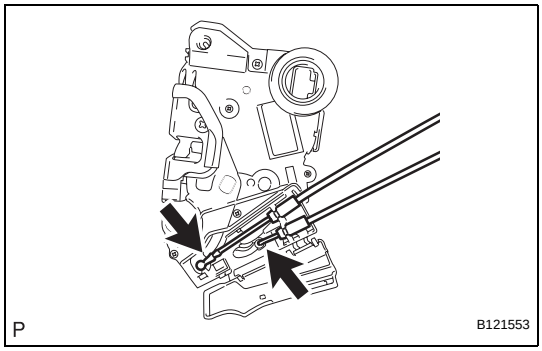

(c) Close the cover.

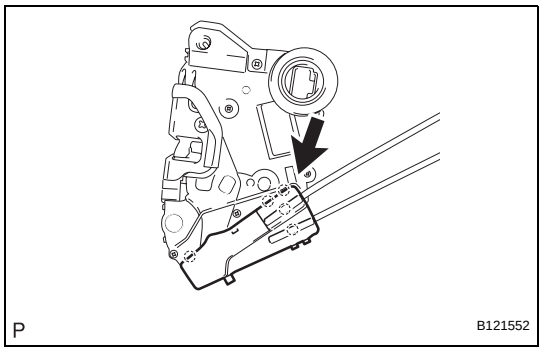

(d) Insert the door lock open rod into the front door lock, then set it to the door panel.
NOTICE:
Make sure that the outside handle link is securely engaged with the door lock.

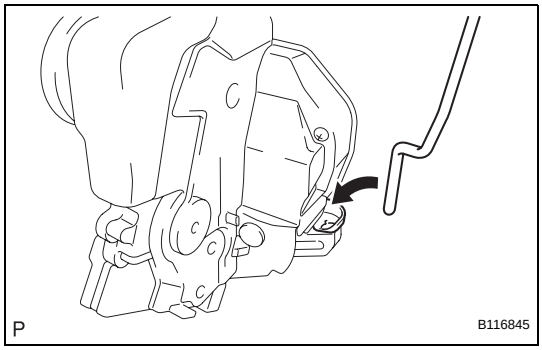

(e) Apply adhesive to the threads of the screws.
Adhesive:
Toyota Genuine Adhesive 1324, Three Bond 1324 or the equivalent.

(f) Using "Torx" socket wrench T30, install the front door lock with the 3 screws.
Torque: 5.0 N*m (51 kgf*cm, 44 in.*lbf)

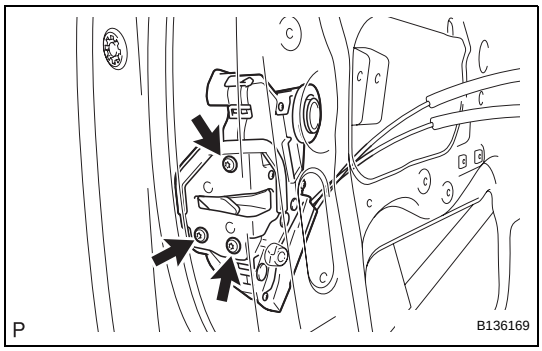

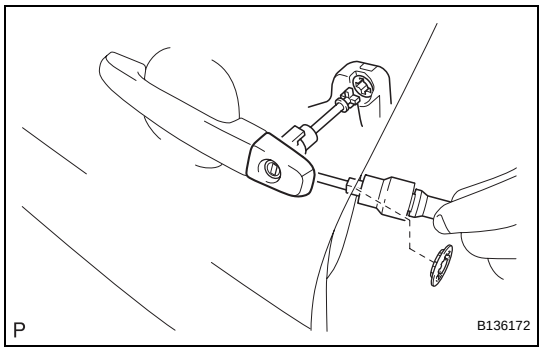

11. INSTALL FRONT DOOR OUTSIDE HANDLE COVER

(a) Using "Torx" socket wrench T30, install the cover with the door lock key cylinder.
Torque: 4.0 N*m (41 kgf*cm, 35 in.*lbf)
HINT:
Make sure that the door lock key cylinder rod is inserted.

(b) Install the hole plug.

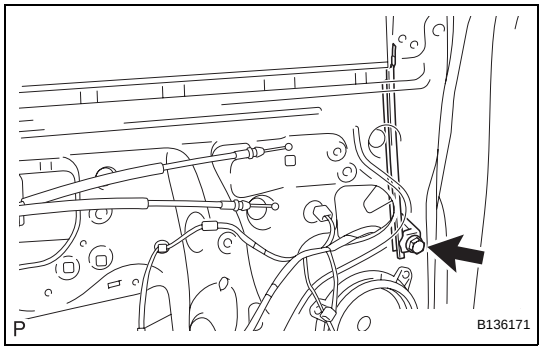

12. INSTALL FRONT DOOR FRAME SUB-ASSEMBLY FRONT LOWER

(a) Install the front door frame sub-assembly front lower with the bolt.
Torque: 6.2 N*m (63 kgf*cm, 54 in.*lbf)

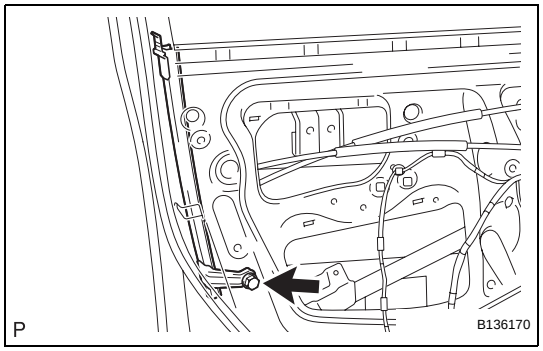

13. INSTALL FRONT DOOR FRAME SUB-ASSEMBLY REAR LOWER

(a) Install the front door frame sub-assembly rear lower with the bolt.
Torque: 6.2 N*m (63 kgf*cm, 54 in.*lbf)

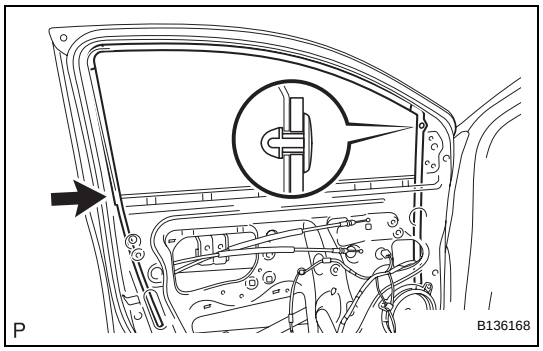

14. INSTALL FRONT DOOR GLASS RUN

(a) Install the front door glass run, then engage the clip.

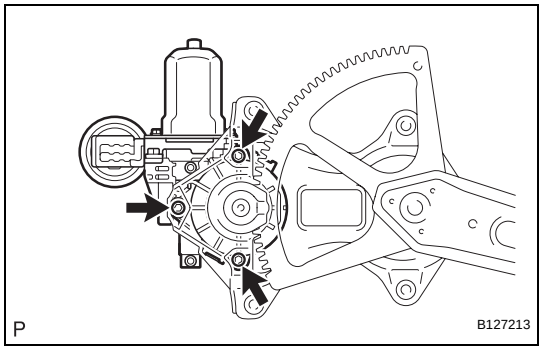

15. INSTALL POWER WINDOW REGULATOR MOTOR ASSEMBLY FRONT (w/ Power Window)

(a) Apply MP grease to the sliding and rotating areas of the regulator motor.

(b) Using "Torx" socket wrench T25, install the power window regulator motor assembly front with the 3 screws.
Torque: 5.4 N*m (55 kgf*cm, 48 in.*lbf)

16. INSTALL FRONT DOOR WINDOW REGULATOR SUB-ASSEMBLY

(a) Apply MP grease to the sliding and rotating areas of the front door window regulator.
NOTICE:
Do not apply grease to the window regulator spring.

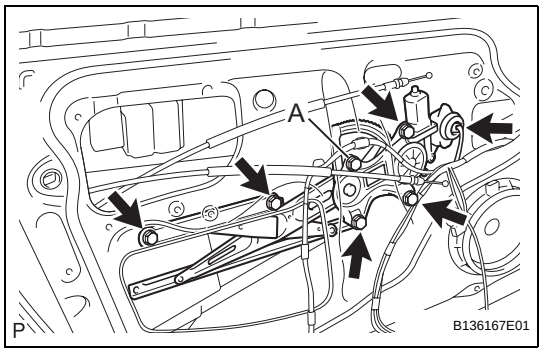

(b) w/ Power window:
(1) Loosely screw bolt A onto the front door window regulator.
(2) Insert the front door window regulator into the door panel. Use bolt A to hang the front door window regulator on the door panel.
NOTICE:
Do not drop the window regulator as it may be damaged.
(3) Install the front door window regulator with the 5 bolts, and tighten bolt A.
Torque: 8.0 N*m (82 kgf*cm, 71 in.*lbf)
(4) Connect the connector.

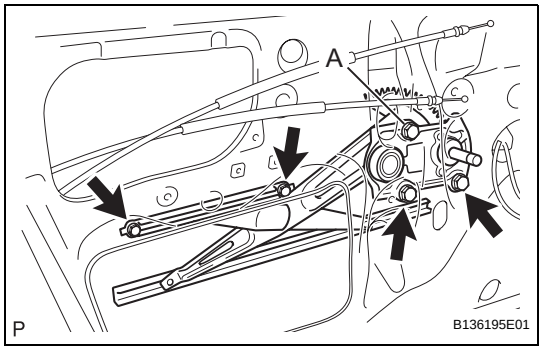

(c) w/o Power window:
(1) Loosely screw bolt A onto the front door window regulator.
(2) Insert the front door window regulator into the door panel. Use bolt A to hang the front door window regulator on the door panel.
NOTICE:
Do not drop the window regulator as it may be damaged.
(3) Install the front door window regulator with the 5 bolts, and tighten bolt A.
Torque: 8.0 N*m (82 kgf*cm, 71 in.*lbf)
(4) Connect the connector.

ED

17. INSTALL FRONT DOOR GLASS SUB-ASSEMBLY

(a) Insert the door glass into the door panel along the glass run as indicated by the arrows in the illustration.
NOTICE:
Do not damage the glass.

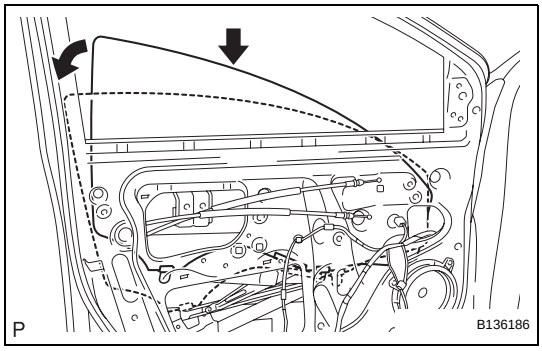

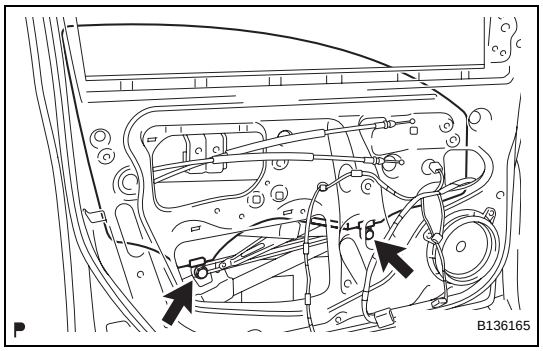

(b) Install the front door glass onto the front door window regulator with the 2 bolts.
Torque: 8.0 N*m (82 kgf*cm, 71 in.*lbf)

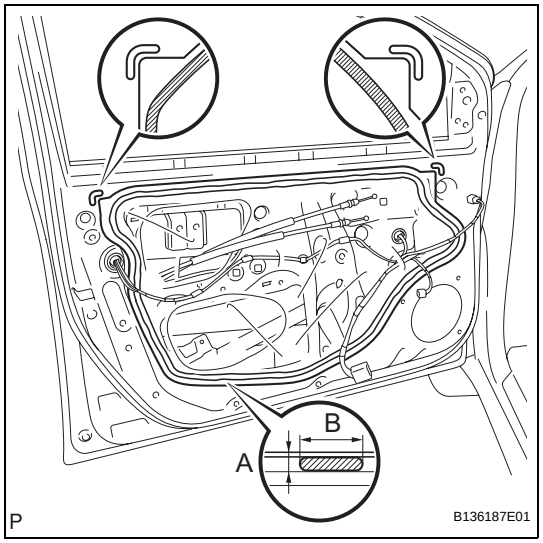

18. INSTALL FRONT DOOR SERVICE HOLE COVER

(a) Apply butyl tape to the door panel, then install a new front door service hole cover as shown in the illustration.
Adhesive:
Part No. 08850-00065, Butyl Tape Set or the equivalent
Specification

Area	Dimension
A	2.0 mm (0.079 in.) or more
B	6.0 mm (0.236 in.) or more

HINT:
- When installing the service hole cover, pull the links and connectors out through the service hole.
- There should be no wrinkles or folds after attaching the service hole cover.
- After attaching the service hole cover, check the quality of the seal.

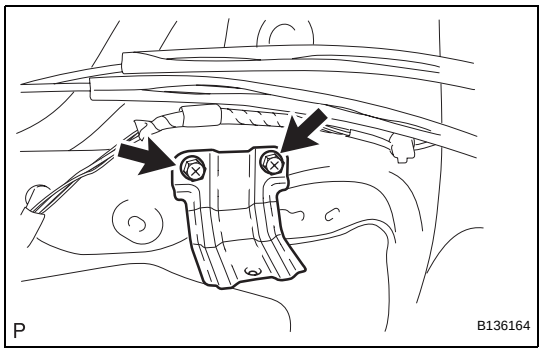

19. INSTALL FRONT DOOR TRIM BRACKET

(a) Install the front door trim bracket with the 2 screws.

20. INSTALL FRONT DOOR BELT MOULDING (See page ET-86)

21. INSTALL OUTER REAR VIEW MIRROR (See page MI-11)

22. INSTALL FRONT NO.1 SPEAKER ASSEMBLY (See page AV-160)

23. INSTALL FRONT DOOR GLASS WEATHERSTRIP INNER

(a) Install the front door glass weatherstrip inner onto the front door trim board.

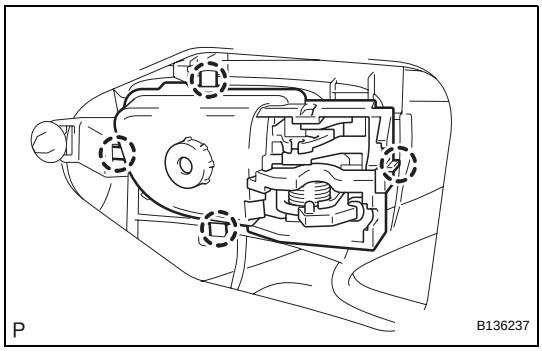

24. INSTALL FRONT DOOR INSIDE HANDLE SUB-ASSEMBLY

(a) Engage the 4 claws and install the front door inside handle.

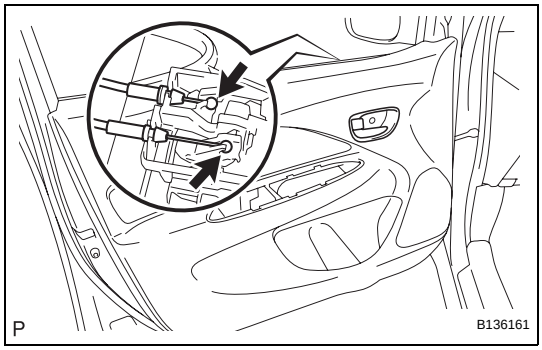

25. INSTALL FRONT DOOR TRIM BOARD SUB-ASSEMBLY

(a) w/ Power window:

(1) Connect the front door lock remote control cable and front door inside locking cable.

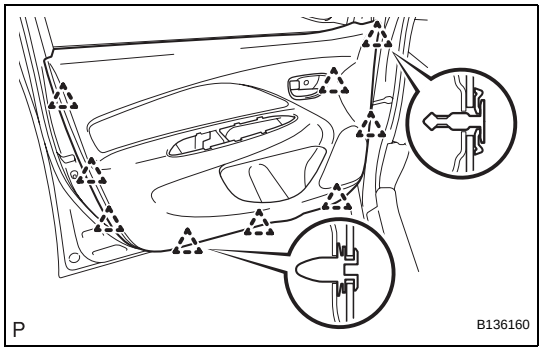

(2) Engage the 9 clips and install the front door trim board.

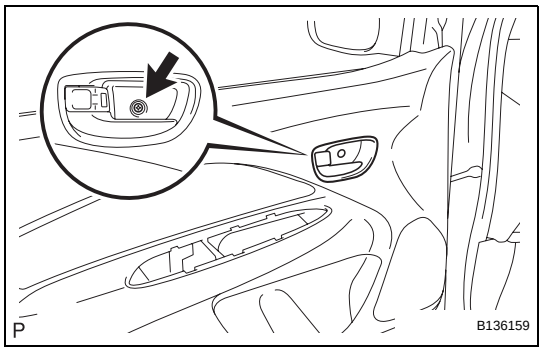

(3) Tighten the screw.

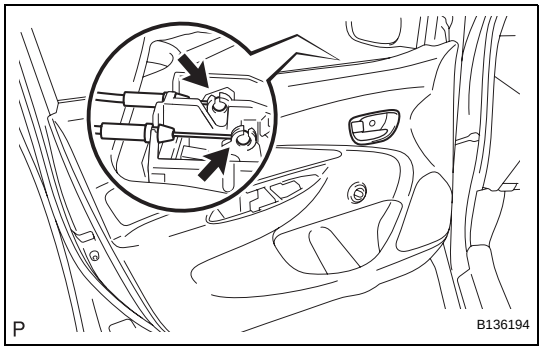

(b) w/o Power window:

(1) Connect the front door lock remote control cable and front door inside locking cable.

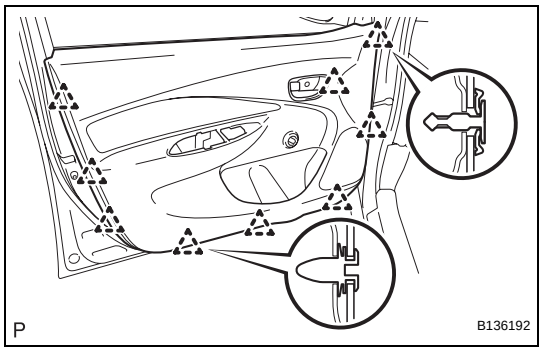

(2) Engage the 9 clips and install the front door trim board.

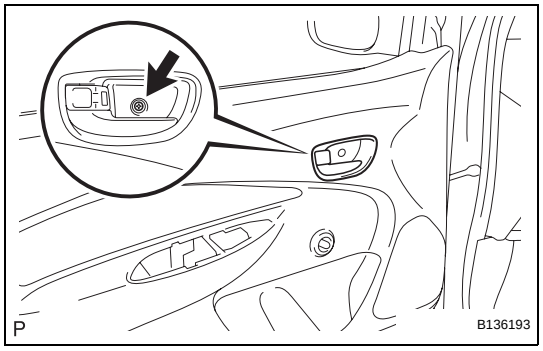

(3) Tighten the screw.

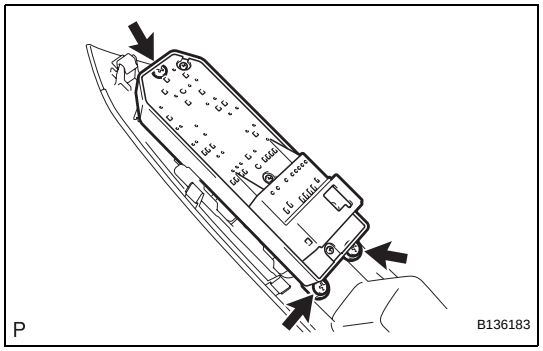

26. INSTALL POWER WINDOW REGULATOR MASTER SWITCH ASSEMBLY (w/ Power Window)

(a) Install the power window regulator master switch with the 3 screws.

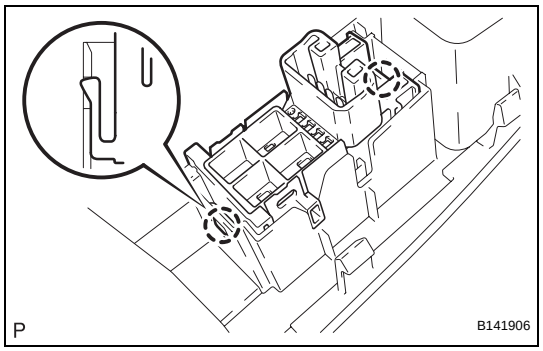

27. INSTALL POWER WINDOW REGULATOR SWITCH ASSEMBLY (w/ Power Window)

(a) Engage the 2 claws and install the power window regulator switch.

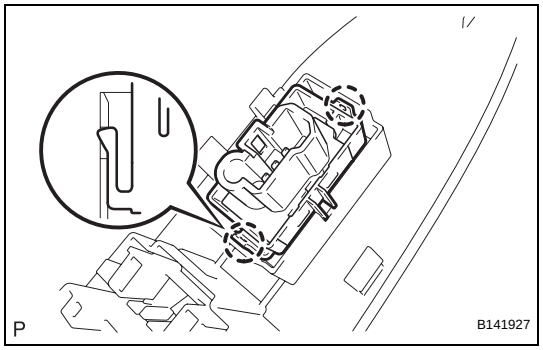

28. INSTALL DOOR CONTROL SWITCH (w/ Power Door Lock)

(a) Engage the 2 claws and install the door control switch.

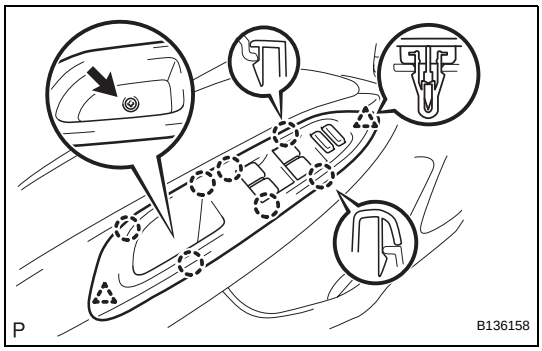

29. INSTALL FRONT ARMREST BASE UPPER PANEL

(a) for Driver side with power window:
  (1) Connect the connector.
  (2) Engage the 7 claws and 2 clips and install the front armrest base upper panel.
  (3) Tighten the screw.

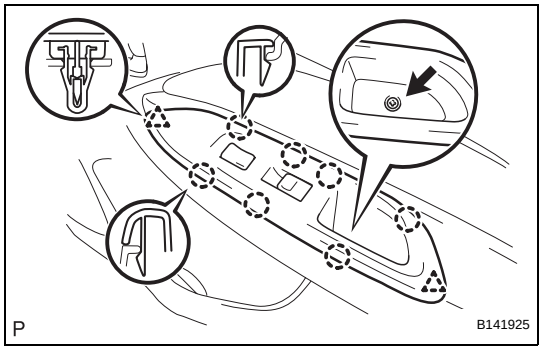

(b) for Front passenger side with power window:
  (1) Connect the connector.
  (2) Engage the 7 claws and 2 clips and install the front armrest base upper panel.
  (3) Tighten the screw.

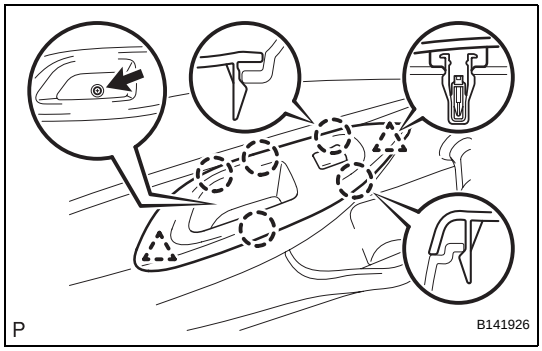

(c) w/o Power window:
  (1) Engage the 5 clips and 2 clips and install the front armrest base upper panel.
  (2) Tighten the screw.

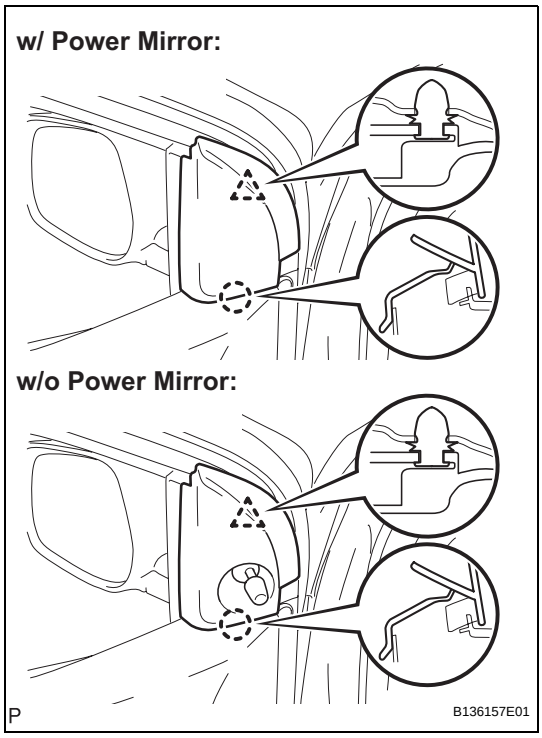

30. INSTALL FRONT DOOR LOWER FRAME BRACKET GARNISH

(a) Engage the claw and clip and install the front door lower frame bracket garnish.

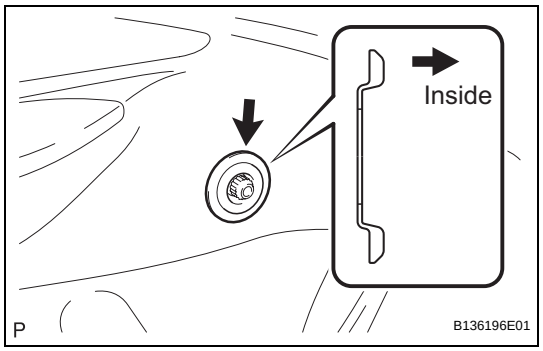

31. INSTALL FRONT DOOR WINDOW REGULATOR HANDLE ASSEMBLY (w/o Power Window)

(a) Install the window regulator handle plate.

(b) Open all the windows.

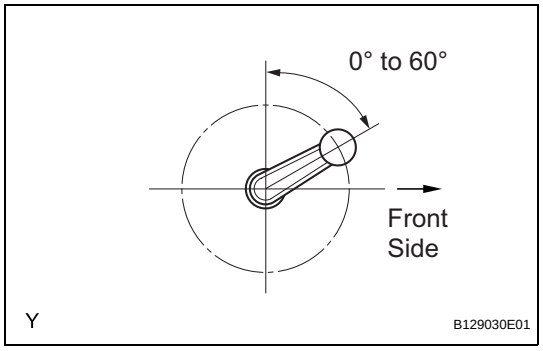

(c) Install the front door window regulator handle with the clip at the angle shown in the illustration.

32. CONNECT CABLE TO NEGATIVE BATTERY TERMINAL
Torque: 5.4 N*m (55 kgf*cm, 48 in.*lbf)

FRONT DOOR (for Hatchback with Power Window)

COMPONENTS

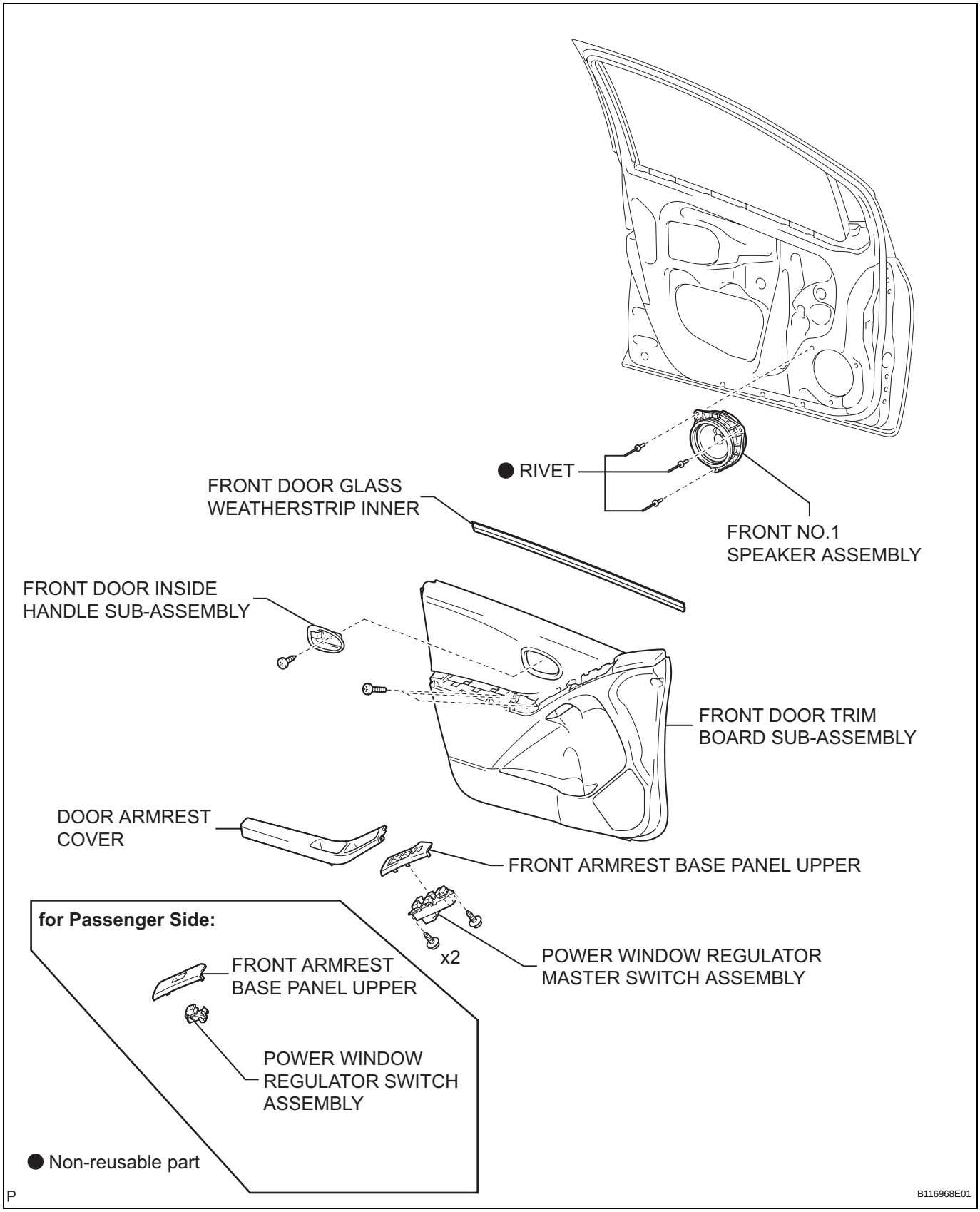

ED

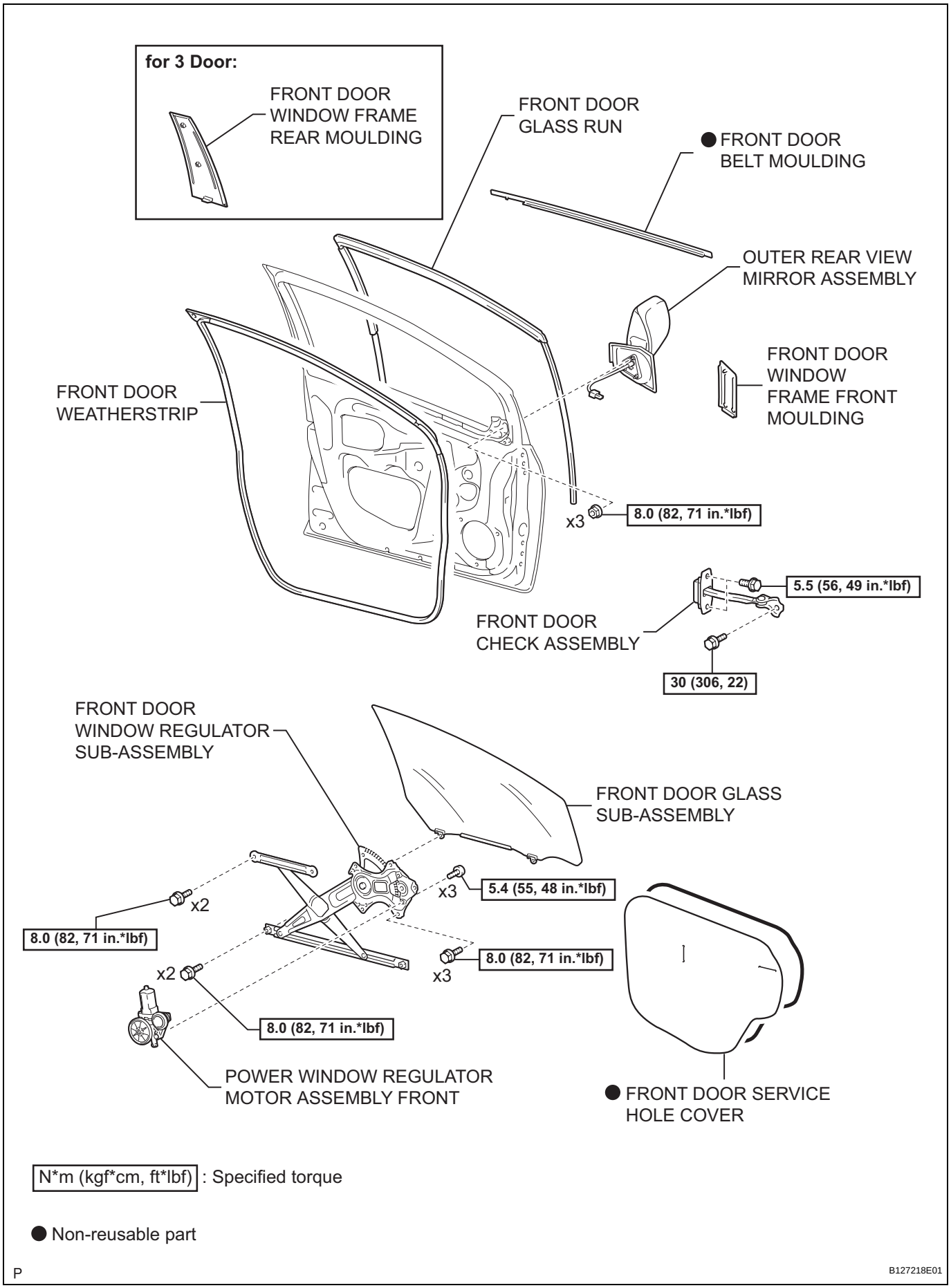
for 3 Door:
FRONT DOOR WINDOW FRAME REAR MOULDING
FRONT DOOR GLASS RUN
● FRONT DOOR BELT MOULDING
OUTER REAR VIEW MIRROR ASSEMBLY
FRONT DOOR WINDOW FRAME FRONT MOULDING
FRONT DOOR WEATHERSTRIP
x3
8.0 (82, 71 in.*lbf)
5.5 (56, 49 in.*lbf)
FRONT DOOR CHECK ASSEMBLY
30 (306, 22)
FRONT DOOR WINDOW REGULATOR SUB-ASSEMBLY
FRONT DOOR GLASS SUB-ASSEMBLY
x2
8.0 (82, 71 in.*lbf)
x3
5.4 (55, 48 in.*lbf)
x3
8.0 (82, 71 in.*lbf)
x2
8.0 (82, 71 in.*lbf)
POWER WINDOW REGULATOR MOTOR ASSEMBLY FRONT
● FRONT DOOR SERVICE HOLE COVER
N*m (kgf*cm, ft*lbf) : Specified torque
● Non-reusable part
P
B127218E01

ED

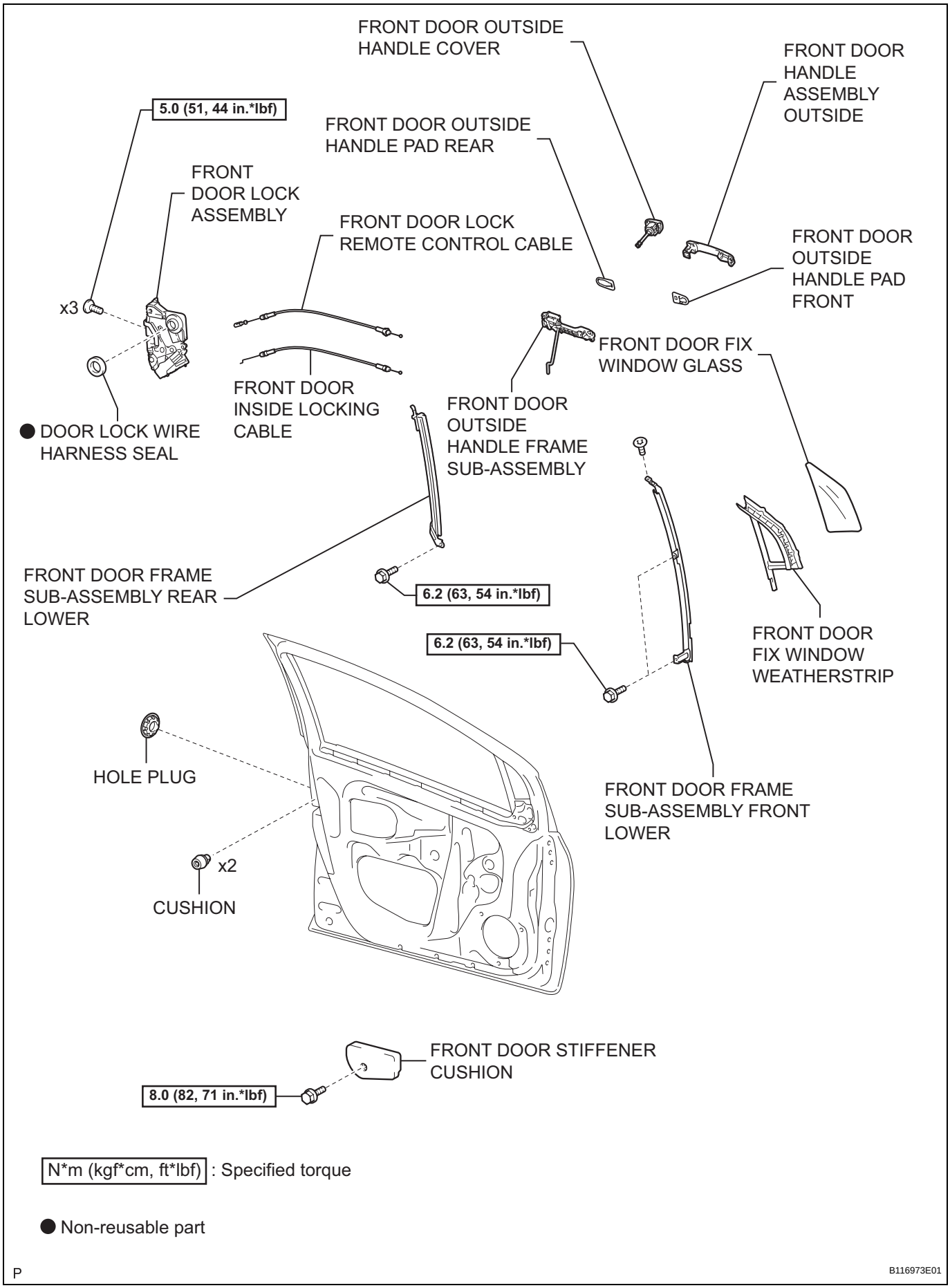

N*m (kgf*cm, ft*lbf) : Specified torque

● Non-reusable part

P

B116973E01

ED

DISASSEMBLY

HINT:
- Use the same procedure for both the RH and LH sides.
- The procedure described below is for the LH side.

1. DISCONNECT CABLE FROM NEGATIVE BATTERY TERMINAL

2. REMOVE DOOR ARMREST COVER

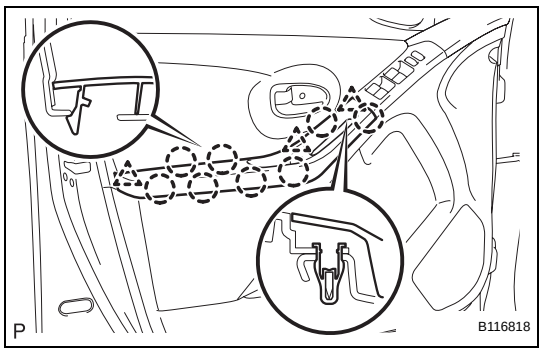

(a) for 5 Door:
Using a screwdriver with its tip wrapped in protective tape, disengage the 8 claws and 3 clips and remove the door armrest cover.

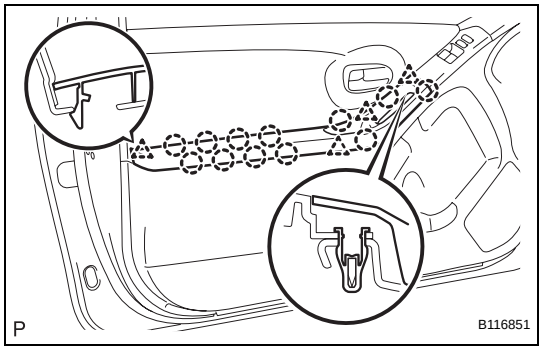

(b) for 3 Door:
Disengage the 12 claws and 4 clips and remove the door armrest cover.

3. REMOVE FRONT ARMREST BASE PANEL UPPER

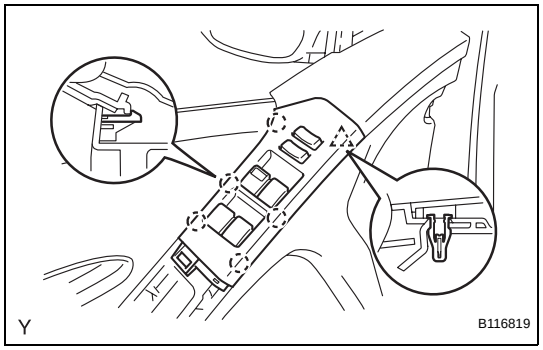

(a) Using a screwdriver with its tip wrapped in protective tape, disengage the 5 claws and clip and remove the front armrest base panel upper.
(b) Disconnect the connector.

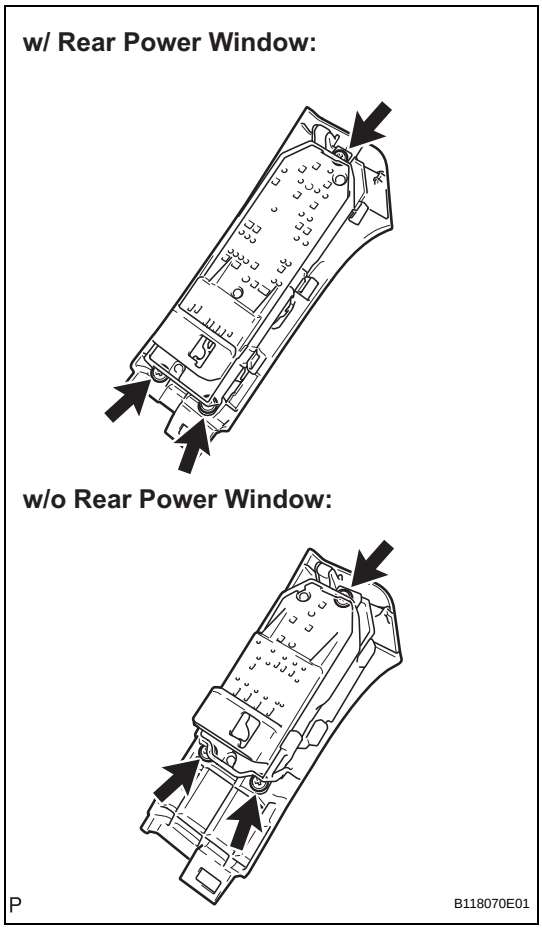

4. REMOVE POWER WINDOW REGULATOR MASTER SWITCH ASSEMBLY

(a) Remove the 3 screws and the power window regulator master switch.

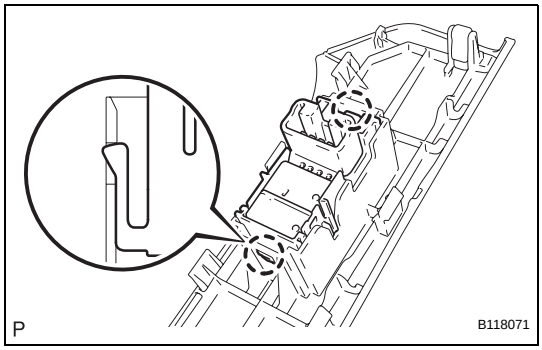

5. REMOVE POWER WINDOW REGULATOR SWITCH ASSEMBLY

(a) Disengage the 2 claws and remove the power window regulator switch.

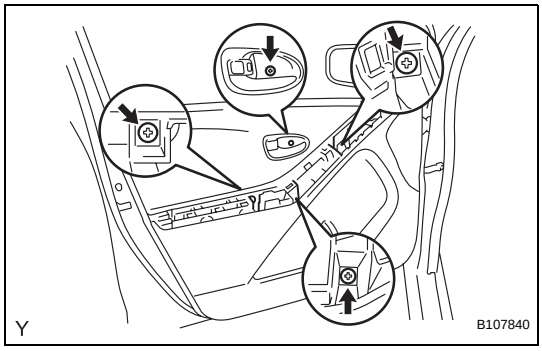

6. REMOVE FRONT DOOR TRIM BOARD SUB-ASSEMBLY

(a) Remove the 4 screws.

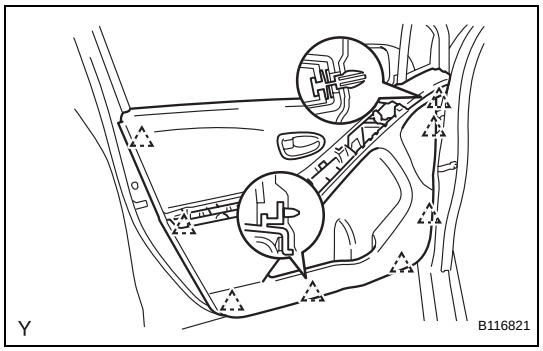

(b) 5 Door:
Disengage the 8 clips.

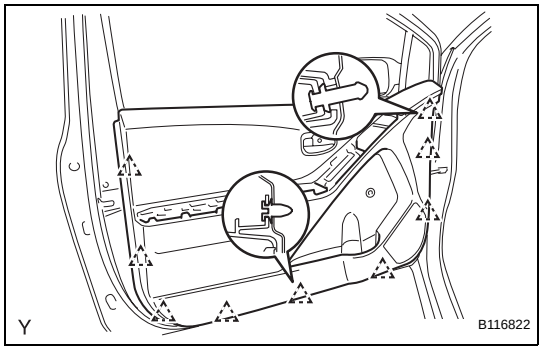

(c) 3 Door:
Disengage the 9 clips.

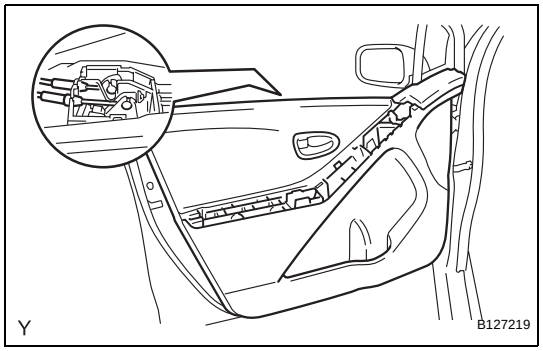

(d) Disconnect the front door lock remote control cable and front door inside locking cable and remove the front door trim board.

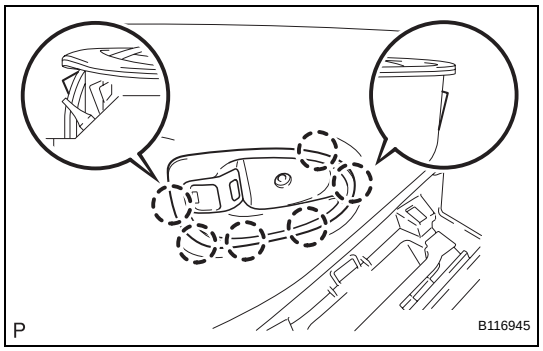

7. REMOVE FRONT DOOR INSIDE HANDLE SUB-ASSEMBLY

(a) Disengage the 6 claws and remove the front door inside handle.

8. REMOVE FRONT DOOR GLASS WEATHERSTRIP INNER

(a) Remove the front door glass weatherstrip inner from the front door trim board.

9. REMOVE FRONT NO.1 SPEAKER ASSEMBLY (See page AV-164)

10. REMOVE FRONT DOOR WINDOW FRAME FRONT MOULDING (See page ET-114)

11. REMOVE FRONT DOOR WINDOW FRAME REAR MOULDING (for 3 Door) (See page ET-114)

12. REMOVE OUTER REAR VIEW MIRROR ASSEMBLY (See page MI-13)

13. REMOVE FRONT DOOR BELT MOULDING (See page ET-91)

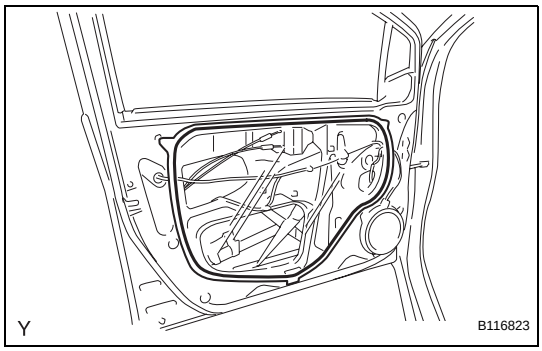

14. REMOVE FRONT DOOR SERVICE HOLE COVER

(a) for 5 Door:
Disconnect the connectors and clamps, then remove the front door service hole cover.
NOTICE:
Remove any tape remaining on the door side.

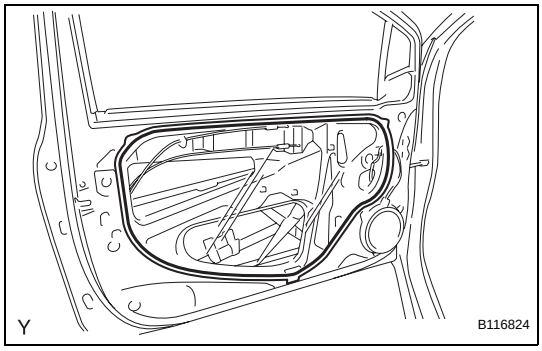

(b) for 3 Door:
Disconnect the connectors and clamps, then remove the front door service hole cover.
NOTICE:
Remove any tape remaining on the door side.

15. REMOVE FRONT DOOR GLASS SUB-ASSEMBLY

(a) Driver side:
Provisionally install the power window regulator master switch.

(b) Passenger side:
Provisionally install the power window regulator switch.

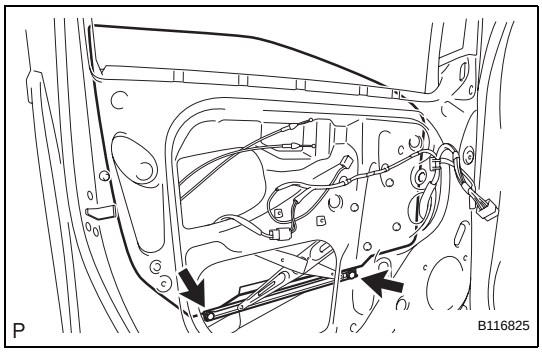

(c) Move the front door glass until the 2 bolts appear in the service holes.

(d) Remove the 2 bolts.
NOTICE:
Do not drop or damage the front door glass when removing the 2 bolts.

ED

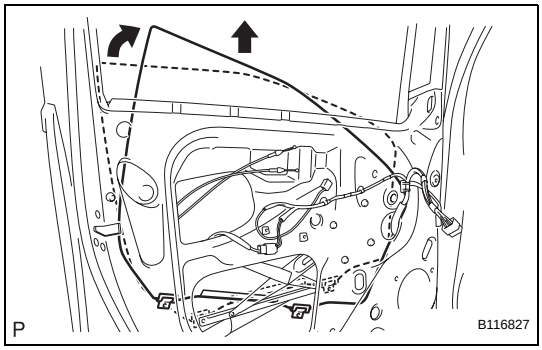

(e) Remove the front door glass in the direction indicated by the arrows in the illustration.
NOTICE:
Do not damage the glass.

(f) Driver side:
Remove the power window regulator master switch.

(g) Passenger side:
Remove the power window regulator switch.

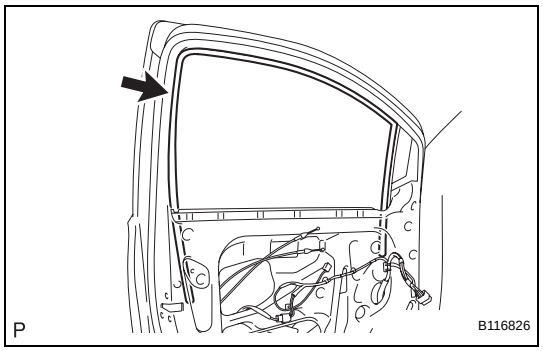

16. REMOVE FRONT DOOR GLASS RUN

(a) Remove the front door glass run.

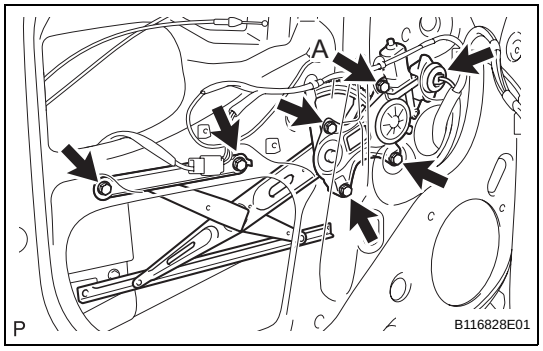

17. REMOVE FRONT DOOR WINDOW REGULATOR SUB-ASSEMBLY

(a) Disconnect the connector.

(b) Loosen bolt A.

(c) Remove the 5 bolts, then remove the front door window regulator.

NOTICE:

Do not drop or damage the window regulator when removing the bolts.

HINT:

Remove the window regulator through the service hole.

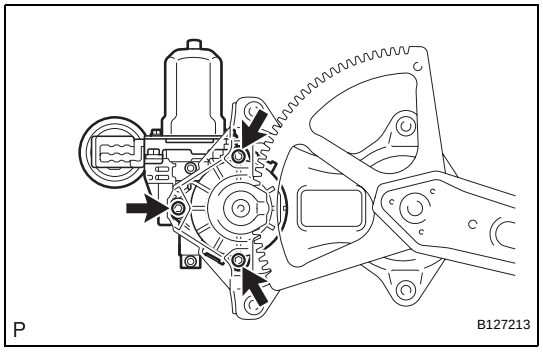

18. REMOVE POWER WINDOW REGULATOR MOTOR ASSEMBLY FRONT

(a) Using "Torx" socket wrench T25, remove the 3 screws and power window regulator motor.

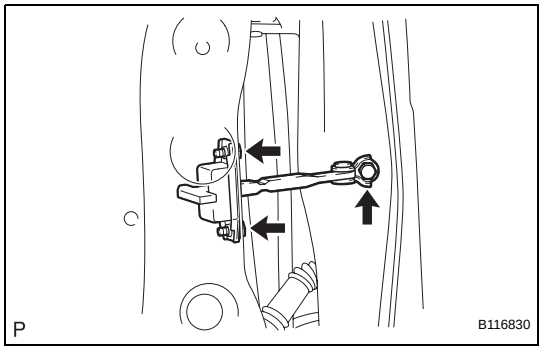

19. REMOVE FRONT DOOR CHECK ASSEMBLY

(a) Remove the 3 bolts, then remove the front door check.

NOTICE:

Do not drop or damage the door check when removing the bolts.

HINT:

Remove the door check through the service hole.

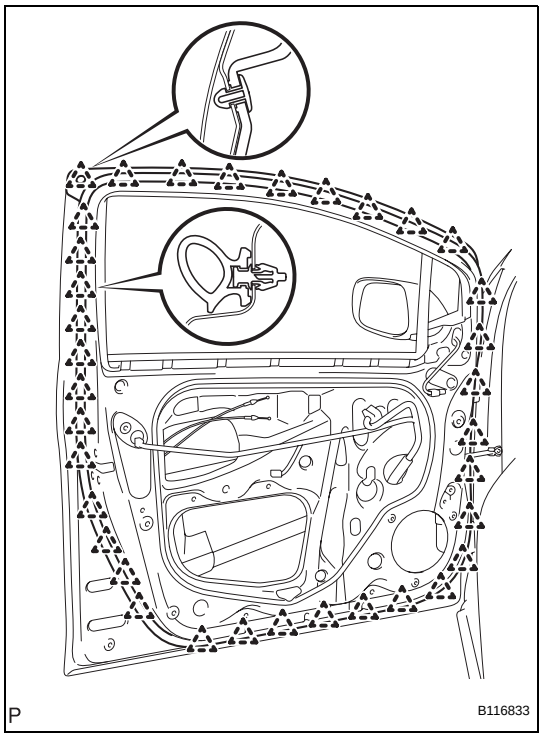

20. REMOVE FRONT DOOR WEATHERSTRIP

(a) for 5 Door:
Disengage the 35 clips and remove the front door weatherstrip.
NOTICE:
Remove any tape remaining on the door side.

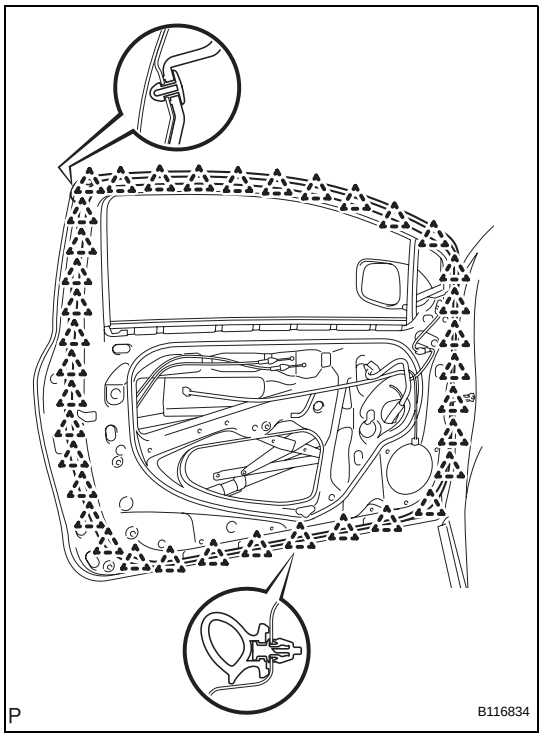

(b) for 3 Door:
Disengage the 37 clips and remove the front door weatherstrip.
NOTICE:
Remove any tape remaining on the door side.

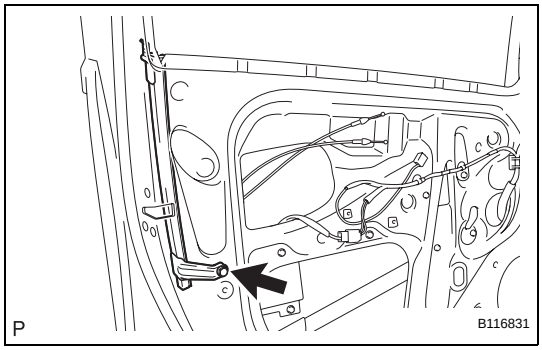

21. REMOVE FRONT DOOR FRAME SUB-ASSEMBLY REAR LOWER

(a) Remove the bolt, then remove the front door frame sub-assembly rear lower.
NOTICE:
Do not drop or damage the front door frame sub-assembly rear lower when removing the bolt.

HINT:
Remove the front door frame sub-assembly rear lower through the service hole.

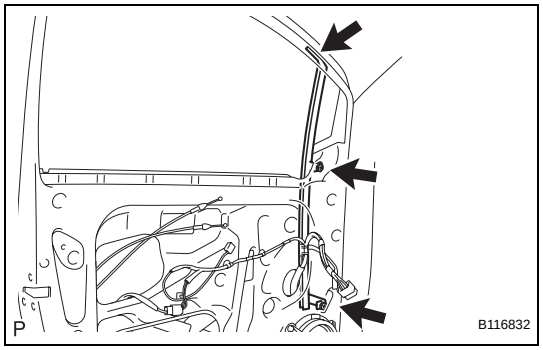

22. REMOVE FRONT DOOR FRAME SUB-ASSEMBLY FRONT LOWER

(a) Remove the 2 bolts and screw, then remove the front door frame sub-assembly front lower.
NOTICE:
Do not drop or damage the front door frame sub-assembly front lower when removing the bolts and screw.
HINT:
Remove the front door frame sub-assembly front lower through the service hole.

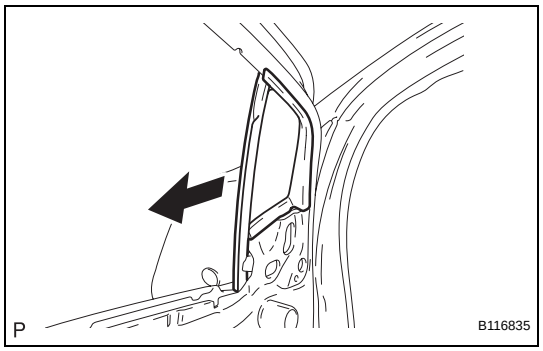

23. REMOVE FRONT DOOR FIX WINDOW WEATHERSTRIP

(a) Slide the front door fix window weatherstrip, in the direction indicated by the arrow in the illustration, to remove them.
(b) Remove the front door fix window glass from the front door fix window weatherstrip.

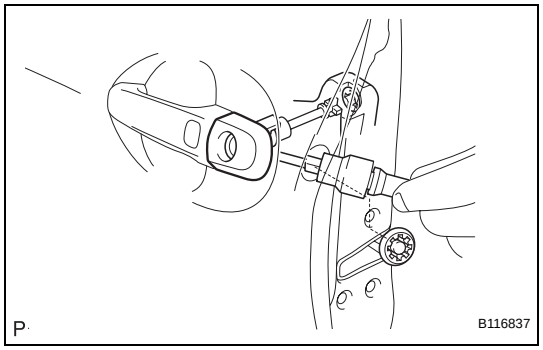

24. REMOVE FRONT DOOR OUTSIDE HANDLE COVER

(a) Remove the hole plug.
(b) Using "Torx" socket wrench T30, loosen the screw and remove the cover with the door lock key cylinder installed.

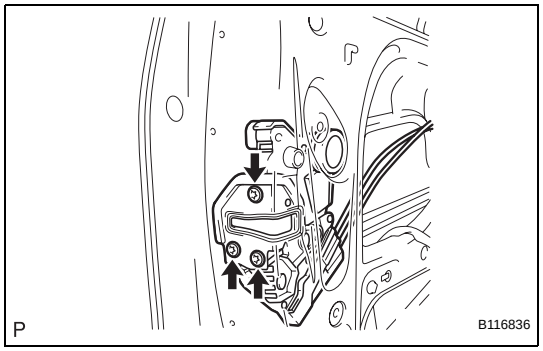

25. REMOVE FRONT DOOR LOCK ASSEMBLY

(a) Using "Torx" socket wrench T30, remove the 3 screws.
(b) Move the front door lock downward, remove the outside handle frame link and remove the front door lock.
NOTICE:
Do not drop or damage the door lock when removing the screws.
HINT:
Remove the front door lock through the service hole.

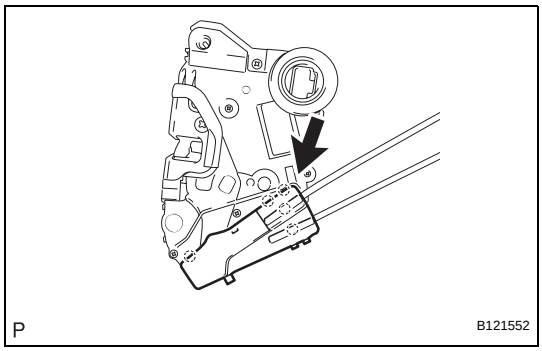

(c) Disengage the 5 claws and open the cover.

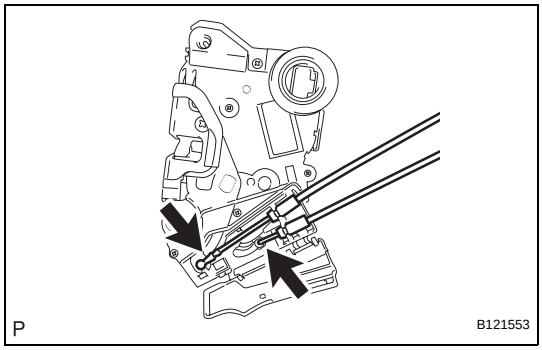

(d) Disconnect the front door lock remote control cable and front door inside locking cable.
(e) Remove the door lock wire harness seal.

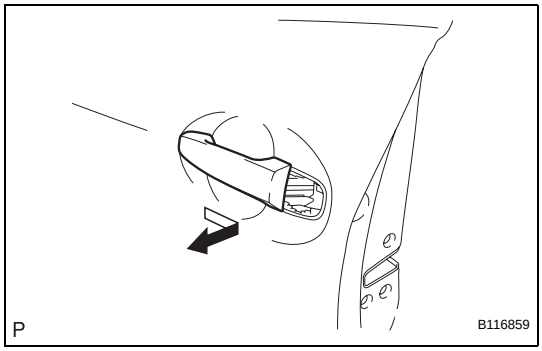

26. REMOVE FRONT DOOR HANDLE ASSEMBLY OUTSIDE

(a) Remove the handle by sliding and pulling it in the direction indicated by the arrow mark in the illustration.

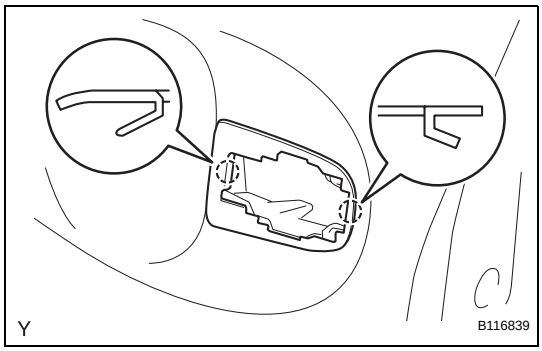

27. REMOVE FRONT DOOR OUTSIDE HANDLE PAD REAR

(a) Disengage the 2 claws and remove the front door outside handle pad rear.

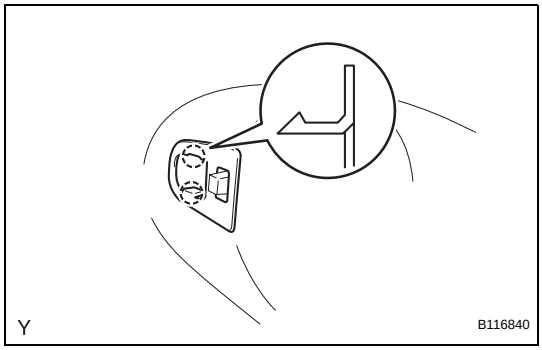

28. REMOVE FRONT DOOR OUTSIDE HANDLE PAD FRONT

(a) Disengage the 2 claws and remove the front door outside handle pad front.

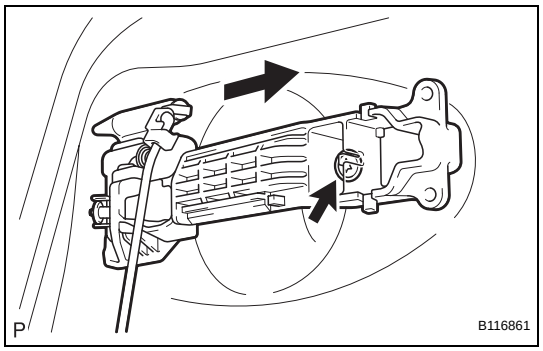

29. REMOVE FRONT DOOR OUTSIDE HANDLE FRAME SUB-ASSEMBLY

(a) Using "Torx" socket wrench T30, loosen the screw.

(b) Slide the front outside handle frame to remove it.

30. REMOVE CUSHION

(a) Remove the 2 cushions from the door panel.

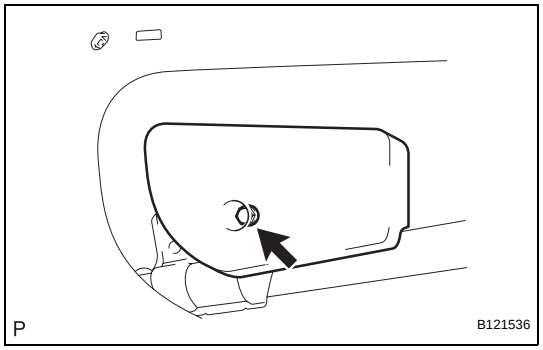

31. REMOVE FRONT DOOR STIFFENER CUSHION

(a) Remove the bolt and front door stiffener cushion.

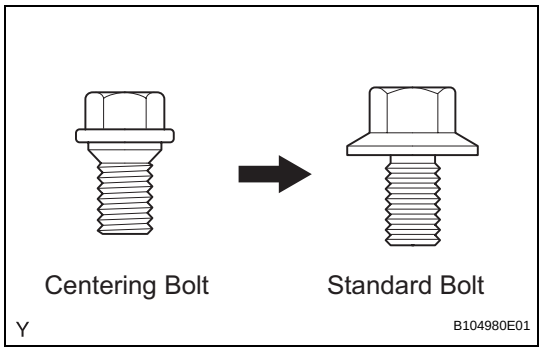

ADJUSTMENT

HINT:

- Before adjusting the door position on vehicles equipped with side airbags and curtain shield airbags, be sure to disconnect the battery. After adjustment, inspect the SRS warning light, the side airbag system and the curtain shield airbag system for normal operation. Then initialize both airbag systems.
- Use the same procedure for the RH and LH sides.
- The procedures described below are for the LH side.
- Centering bolts are used to mount the door hinge onto the vehicle body and door. The door cannot be adjusted with the centering bolts on. Substitute standard bolts (with washers) for the centering bolts when making adjustments.
- For bolts without torque specifications, check the standard bolt chart.

1. INSPECT FRONT DOOR (for 5 Door)

(a) Check that the clearance measurements are within the standard ranges.

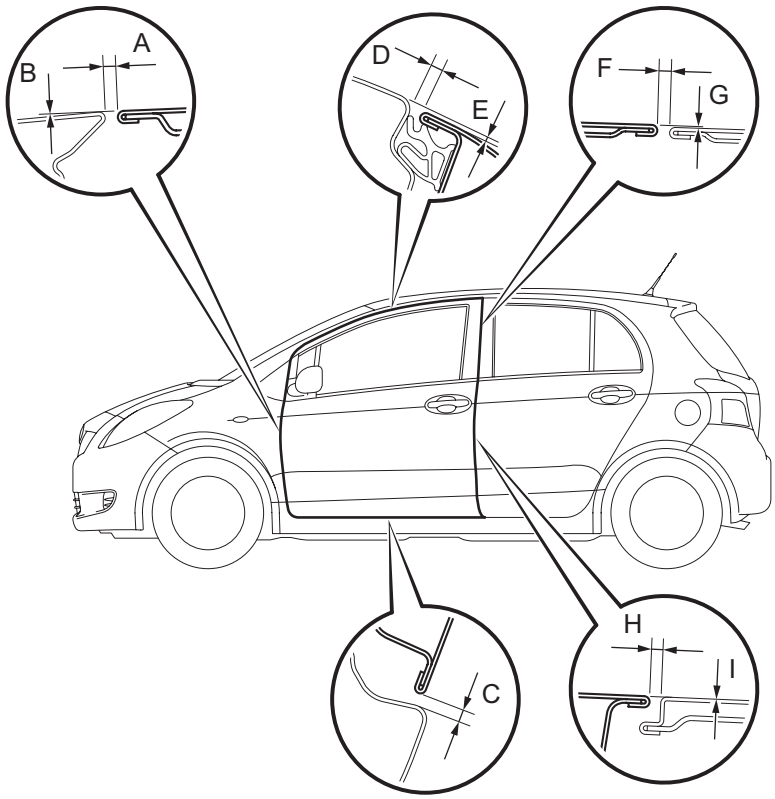

P B118066E01

Standard

Area	Measurement	Area	Measurement
A	2.5 to 5.5 mm (0.098 to 0.217 in.)	F	3.3 to 6.3 mm (0.130 to 0.248 in.)
B	-1.5 to 1.5 mm (-0.059 to 0.059 in.)	G	-1.5 to 1.5 mm (-0.059 to 0.059 in.)
C	4.1 to 7.1 mm (0.161 to 0.280 in.)	H	3.3 to 6.3 mm (0.130 to 0.248 in.)
D	3.5 to 6.5 mm (0.138 to 0.256 in.)	I	-1.5 to 1.5 mm (-0.059 to 0.059 in.)
E	2.8 mm (0.110 in.)	-	-

2. INSPECT FRONT DOOR (for 3 Door)

(a) Check that the clearance measurements are within the standard ranges.

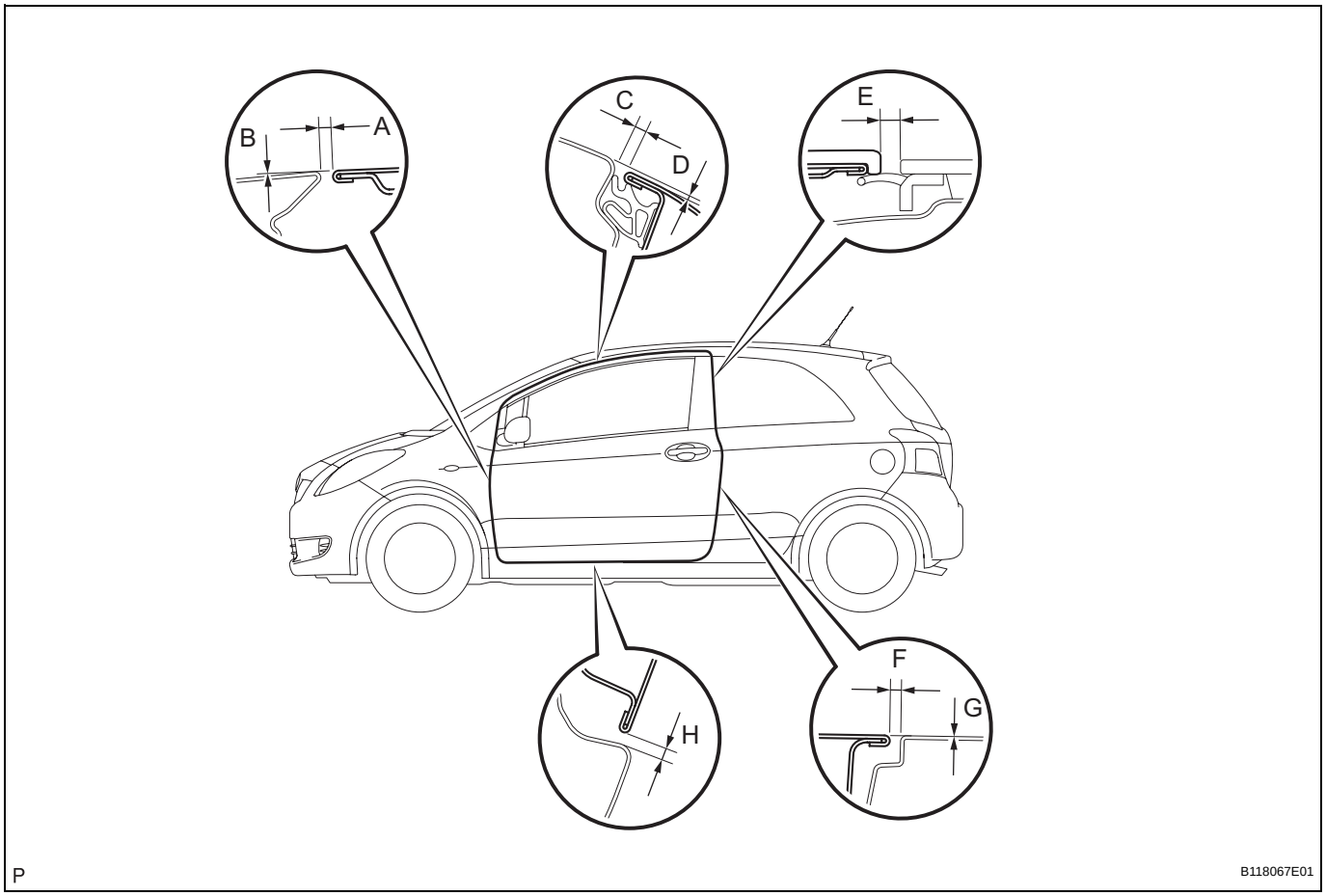

Standard

Area	Measurement	Area	Measurement
A	2.5 to 5.5 mm (0.098 to 0.217 in.)	E	2.8 to 5.8 mm (0.110 to 0.228 in.)
B	-1.5 to 1.5 mm (-0.059 to 0.059 in.)	F	2.5 to 5.5 mm (0.098 to 0.217 in.)
C	3.5 to 6.5 mm (0.138 to 0.256 in.)	G	-1.5 to 1.5 mm (-0.059 to 0.059 in.)
D	2.8 mm (0.110 in.)	H	4.1 to 7.1 mm (0.161 to 0.280 in.)

3. ADJUST FRONT DOOR

(a) Disconnect the cable from the negative battery terminal.
Wait for at least 90 seconds after disconnecting the cable to prevent the airbag from working.

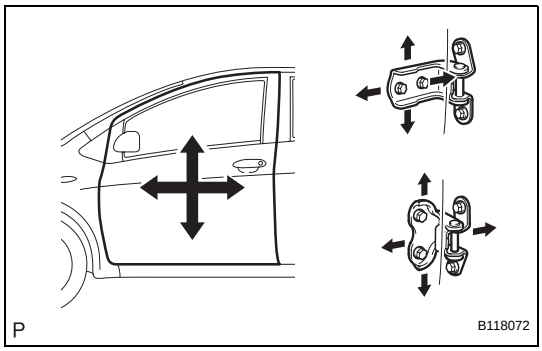

(b) Using SST, adjust the door horizontally and vertically by loosening the body side hinge bolts.
SST 09812-00010

(c) Tighten the body side hinge bolts after the adjustment.
Torque: 26 N*m (265 kgf*cm, 19 ft.*lbf)

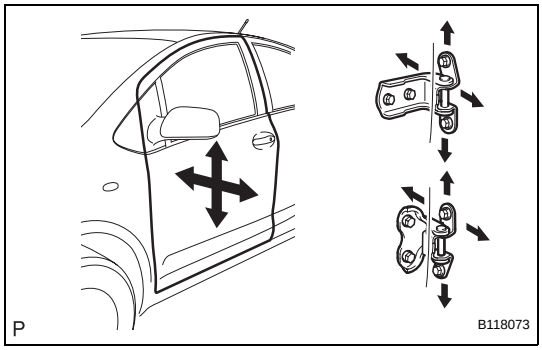

(d) Adjust the door horizontally and vertically by loosening the door side hinge bolts.

(e) Tighten the door side hinge bolts after the adjustment.
Torque: 26 N*m (265 kgf*cm, 19 ft.*lbf)

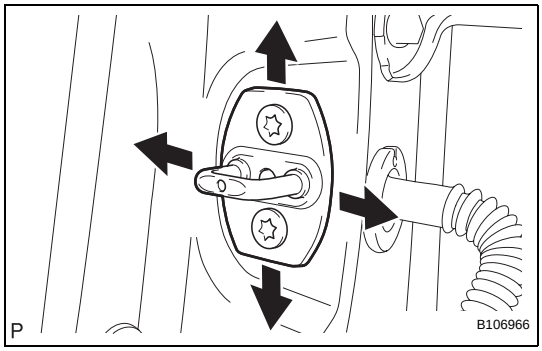

(f) Using "Torx" socket wrench T40, adjust the striker position by slightly loosening the striker mounting screws and hitting the striker with a plastic-faced hammer.

(g) Using "Torx" socket wrench T40, tighten the striker mounting screws after the adjustment.
Torque: 23 N*m (235 kgf*cm, 17 ft.*lbf)

(h) Connect the cable to the negative battery terminal.
Torque: 5.4 N*m (55 kgf*cm, 48 in.*lbf)

ED

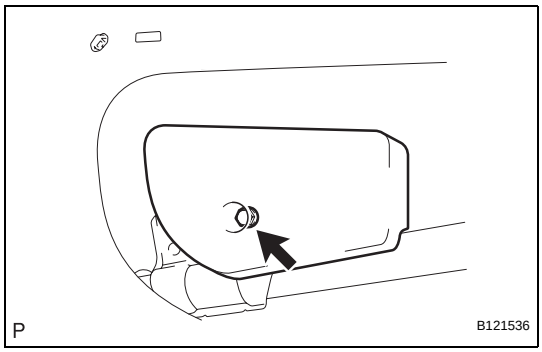

REASSEMBLY

1. INSTALL FRONT DOOR STIFFENER CUSHION

(a) Install the front door stiffener cushion with the bolt.
Torque: 8.0 N*m (82 kgf*cm, 71 in.*lbf)

2. INSTALL CUSHION

(a) Install the 2 cushions onto the door panel.

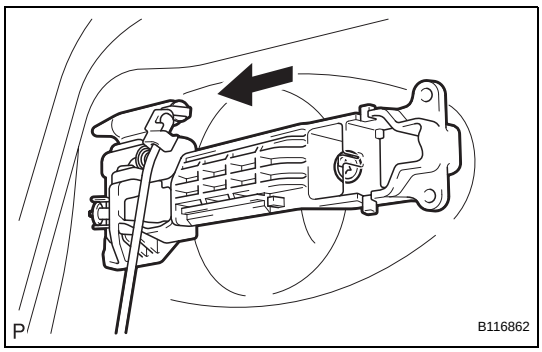

3. INSTALL FRONT DOOR OUTSIDE HANDLE FRAME SUB-ASSEMBLY

(a) Using "Torx" socket wrench T30, install the front outside handle frame with the screw.
Torque: 4.0 N*m (41 kgf*cm, 35 in.*lbf)

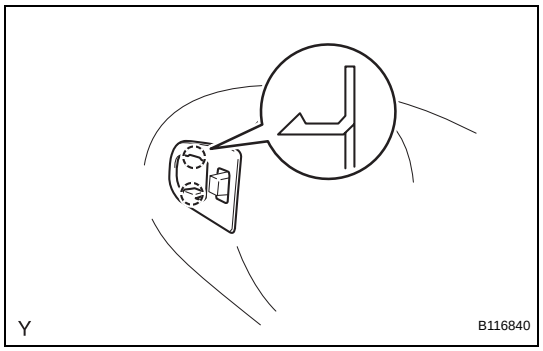

4. INSTALL FRONT DOOR OUTSIDE HANDLE PAD FRONT

(a) Engage the 2 claws and install the front door outside handle pad front.

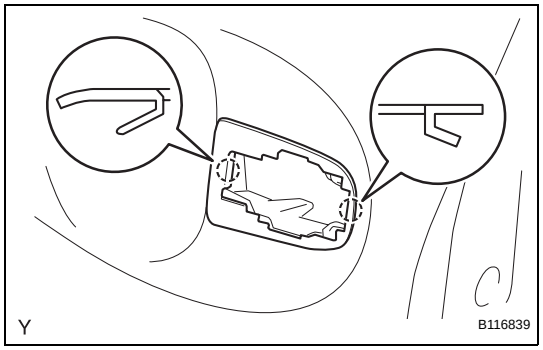

5. INSTALL FRONT DOOR OUTSIDE HANDLE PAD REAR

(a) Engage the 2 claws and install the front door outside handle pad rear.

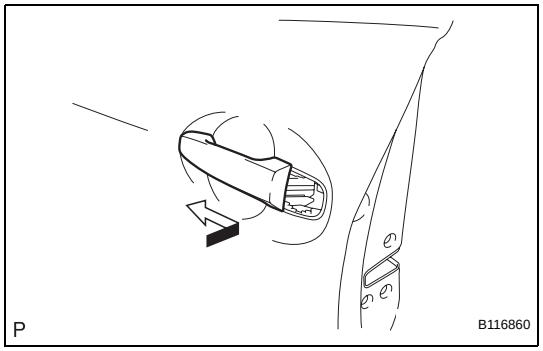

6. INSTALL FRONT DOOR HANDLE ASSEMBLY OUTSIDE

(a) Pushing the front door handle assembly outside in the direction of the arrow mark shown in the illustration, install the front door handle assembly outside.

7. INSTALL FRONT DOOR LOCK ASSEMBLY

NOTICE:

- **If reusing a door lock that has been removed, replace the packing in the connecting part with new.**
- **Make sure that no grease and dirt adheres to the packing surface in the connecting part.**

(a) Apply MP grease to the sliding and rotating areas of the front door lock.

(b) Connect the front door lock remote control cable and front door inside locking cable.

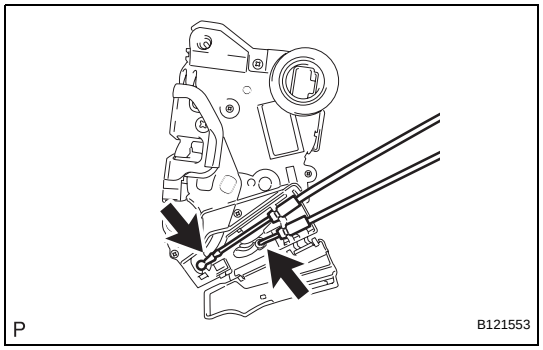

ED

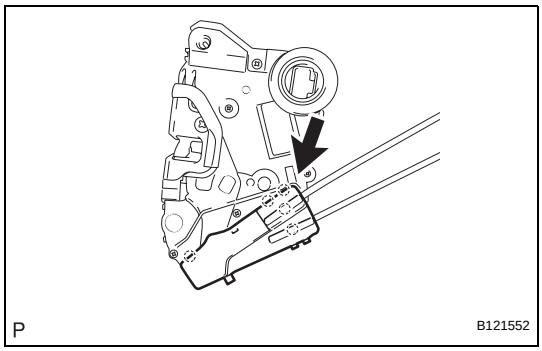

(c) Engage the 5 claws and close the cover.

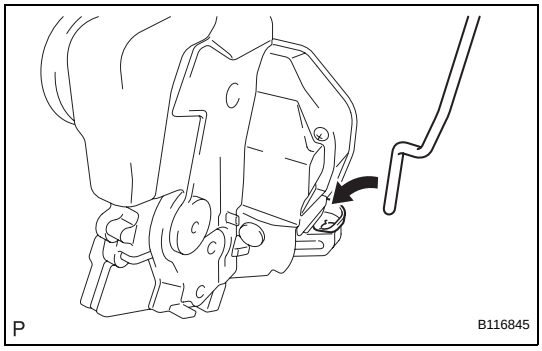

(d) Insert the door lock open rod into the front door lock, then set it to the door panel.
NOTICE:
Make sure that the outside handle link is securely engaged with the door lock.

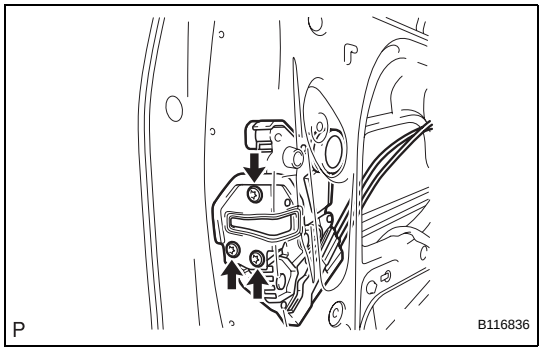

(e) Apply adhesive to the threads of the screws.
Adhesive:
Part No. 08833-00070, THREE BOND 1324 or the equivalent

(f) Using "Torx" socket wrench T30, install the front door lock with the 3 screws.
Torque: 5.0 N*m (51 kgf*cm, 44 in.*lbf)

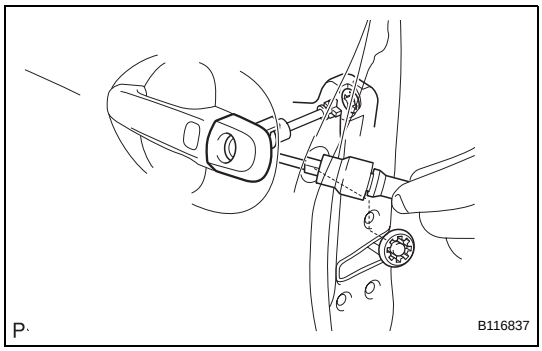

8. INSTALL FRONT DOOR OUTSIDE HANDLE COVER

(a) Using "Torx" socket wrench T30, install the cover with the door lock key cylinder.
Torque: 4.0 N*m (41 kgf*cm, 35 in.*lbf)
HINT:
Make sure that the door lock key cylinder rod is inserted.

(b) Install the hole plug.

9. INSTALL FRONT DOOR FIX WINDOW WEATHERSTRIP

(a) Install the front door fix window glass onto the front door fix window weatherstrip.

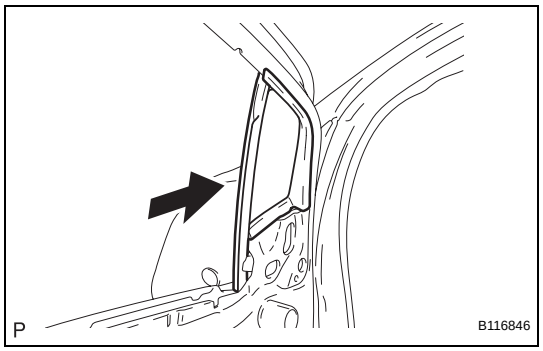

(b) Slide the front door fix window weatherstrip, in the direction indicated by the arrow in the illustration, to install it.

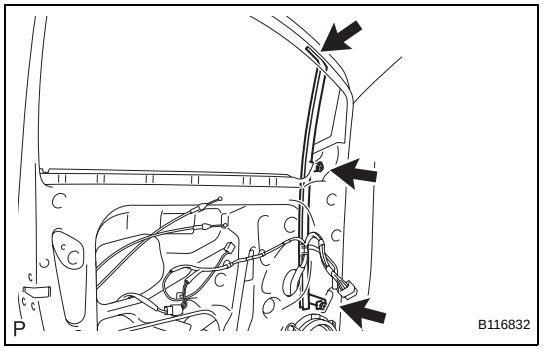

10. INSTALL FRONT DOOR FRAME SUB-ASSEMBLY FRONT LOWER

(a) Install the front door frame sub-assembly front lower with the 2 bolts and screw.
Torque: 6.2 N*m (63 kgf*cm, 54 in.*lbf)

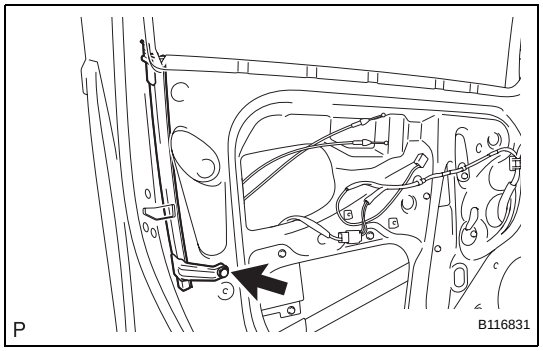

11. INSTALL FRONT DOOR FRAME SUB-ASSEMBLY REAR LOWER

(a) Install the front door frame sub-assembly rear lower with the bolt.
Torque: 6.2 N*m (63 kgf*cm, 54 in.*lbf)

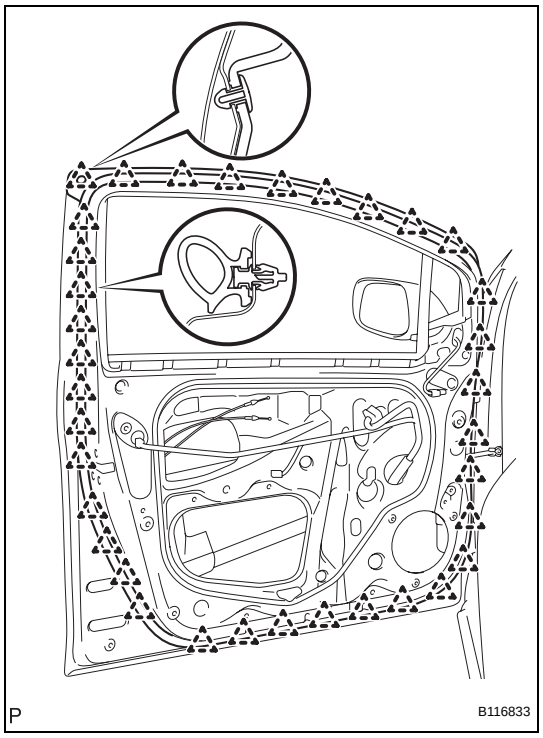

12. INSTALL FRONT DOOR WEATHERSTRIP

(a) for 5 Door:
Engage the 35 clips and install the front door weatherstrip.

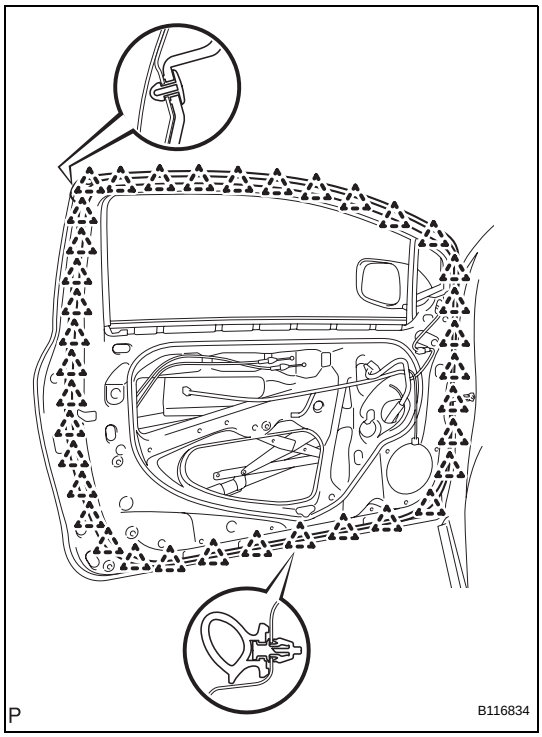

(b) for 3 Door:
Engage the 37 clips and install the front door weatherstrip.

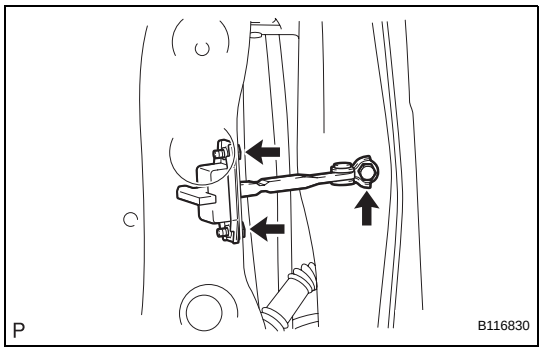

13. INSTALL FRONT DOOR CHECK ASSEMBLY

(a) Apply MP grease to the sliding areas of the door check.

(b) Install the front door check onto the door panel with the 2 bolts.
Torque: 5.5 N*m (56 kgf*cm, 49 in.*lbf)

(c) Apply adhesive to the threads of the bolt.
Adhesive:
Part No. 08833-00070, THREE BOND 1324 or the equivalent

(d) Install the front door check onto the body panel with the bolt.
Torque: 30 N*m (306 kgf*cm, 22 ft.*lbf)

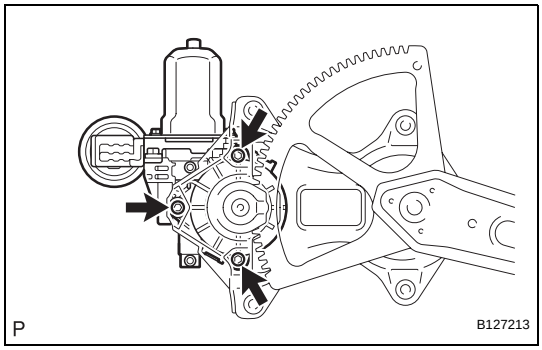

14. INSTALL POWER WINDOW REGULATOR MOTOR ASSEMBLY FRONT

(a) Apply MP grease to the sliding and rotating areas of the regulator motor.

(b) Using "Torx" socket wrench T25, install the power window regulator motor assembly front with the 3 screws.
Torque: 5.4 N*m (55 kgf*cm, 48 in.*lbf)

15. INSTALL FRONT DOOR WINDOW REGULATOR SUB-ASSEMBLY

(a) Apply MP grease to the sliding and rotating areas of the front door window regulator.
NOTICE:
Do not apply grease to the window regulator spring.

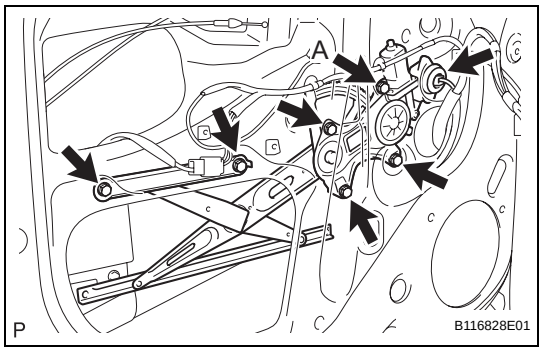

(b) Loosely screw bolt A onto the front door window regulator.

(c) Insert the front door window regulator into the door panel. Use bolt A to hang the front door window regulator on the door panel.
NOTICE:
Do not drop the window regulator as it may be damaged.

(d) Install the front door window regulator with the 5 bolts, and tighten bolt A.
Torque: 8.0 N*m (82 kgf*cm, 71 in.*lbf)

(e) Connect the connector.

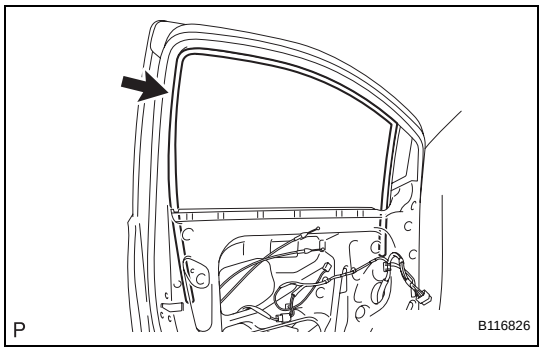

16. INSTALL FRONT DOOR GLASS RUN

(a) Install the front door glass run.

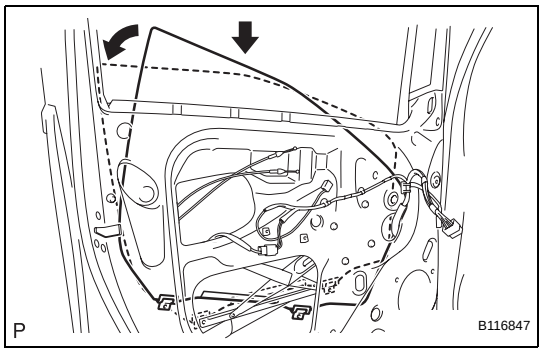

17. INSTALL FRONT DOOR GLASS SUB-ASSEMBLY

(a) Insert the door glass into the door panel along the glass run as indicated by the arrows in the illustration.
NOTICE:
Do not damage the glass.

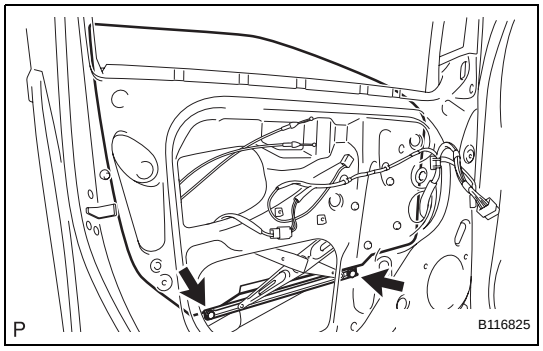

(b) Install the front door glass onto the front door window regulator with the 2 bolts.
Torque: 8.0 N*m (82 kgf*cm, 71 in.*lbf)

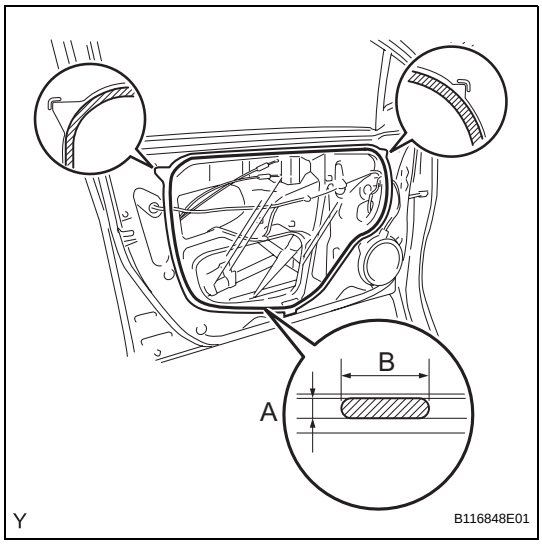

18. INSTALL FRONT DOOR SERVICE HOLE COVER

(a) for 5 Door:

Apply butyl tape to the door panel, then install the front door service hole cover as shown in the illustration.

Adhesive:

Part No. 08850-00065, Butyl Tape Set or the equivalent

Specification

Area	Dimension
A	2.0mm (0.079 in.) or more
B	6.0mm (0.236 in.) or more

HINT:

- When installing the service hole cover, pull the links and connectors out through the service hole.
- There should be no wrinkles or folds after attaching the service hole cover.
- After attaching the service hole cover, check the quality of the seal.

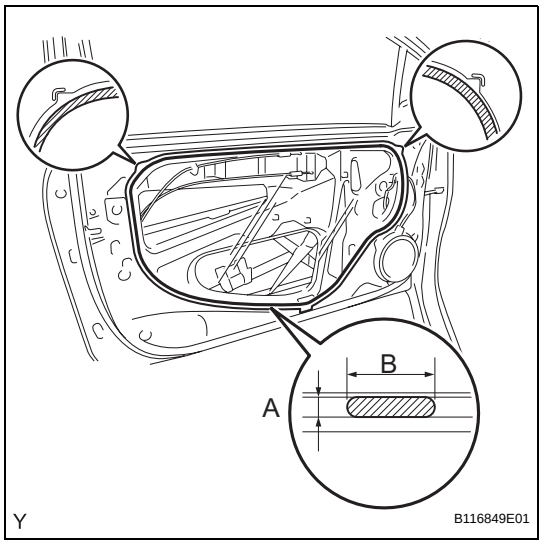

(b) for 3 Door:

Apply butyl tape to the door panel, then install the front door service hole cover as shown in the illustration.

Adhesive:

Part No. 08850-00065, Butyl Tape Set or the equivalent

Specification

Area	Dimension
A	2.0mm (0.079 in.) or more
B	6.0mm (0.236 in.) or more

HINT:

- When installing the service hole cover, pull the links and connectors out through the service hole.
- There should be no wrinkles or folds after attaching the service hole cover.
- After attaching the service hole cover, check the quality of the seal.

19. INSTALL FRONT DOOR BELT MOULDING (See page ET-92)

20. INSTALL OUTER REAR VIEW MIRROR ASSEMBLY (See page MI-13)

21. INSTALL FRONT DOOR WINDOW FRAME REAR MOULDING (for 3 Door) (See page ET-114)

22. INSTALL FRONT DOOR WINDOW FRAME FRONT MOULDING (See page ET-115)

23. INSTALL FRONT NO.1 SPEAKER ASSEMBLY (See page AV-164)

24. INSTALL FRONT DOOR GLASS WEATHERSTRIP INNER

(a) Install the front door glass weatherstrip inner onto the front door trim board.

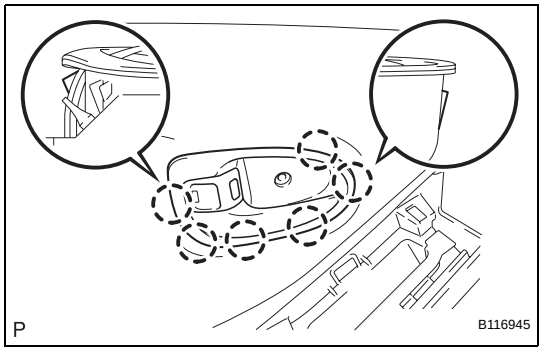

25. INSTALL FRONT DOOR INSIDE HANDLE SUB-ASSEMBLY

(a) Engage the 6 claws and install the front door inside handle.

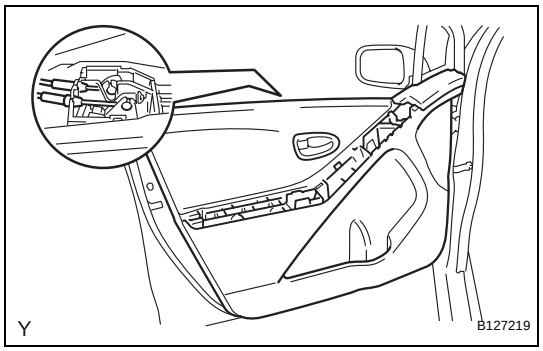

26. INSTALL FRONT DOOR TRIM BOARD SUB-ASSEMBLY

(a) Connect the front door lock remote control cable and front door inside locking cable.

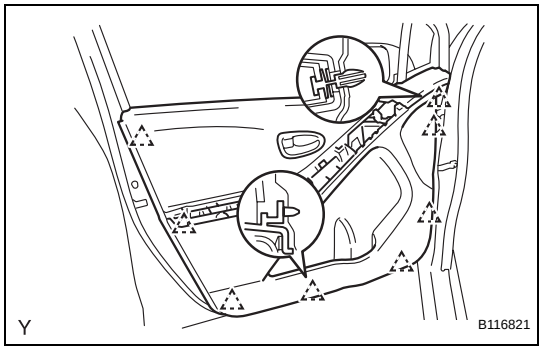

(b) 5 Door:
Engage the 8 clips and install the front door trim board.

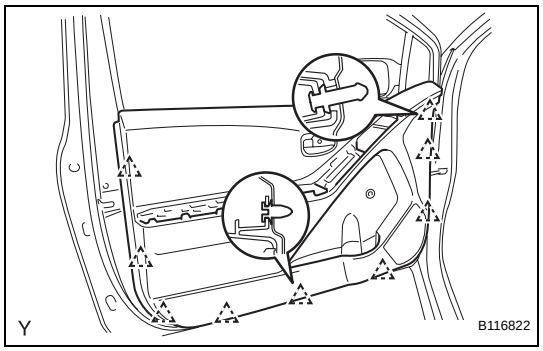

(c) 3 Door:
Engage the 9 clips and install the front door trim board.

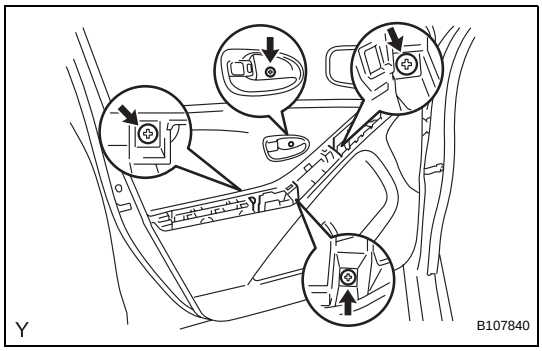

(d) Tighten the 4 screws.

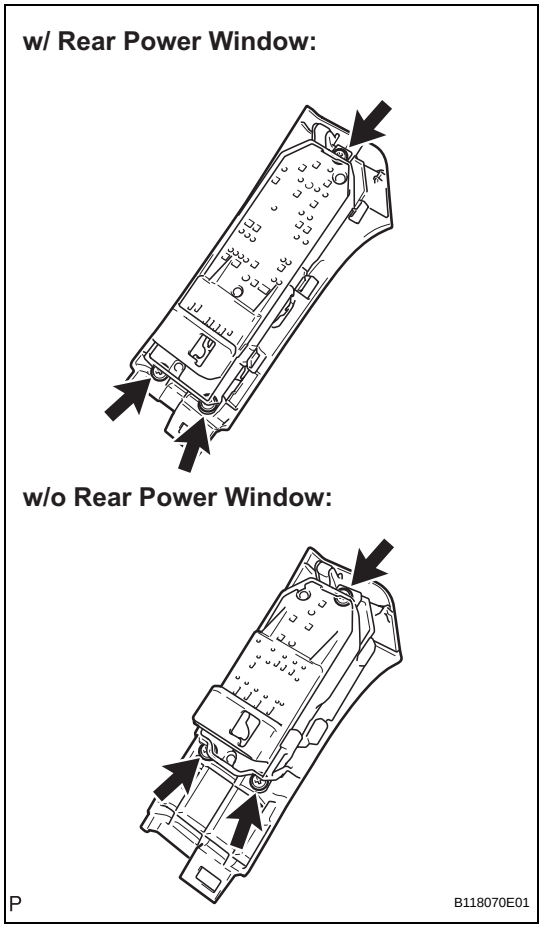

27. INSTALL POWER WINDOW REGULATOR MASTER SWITCH ASSEMBLY

(a) Install the power window regulator master switch with the 3 screws.

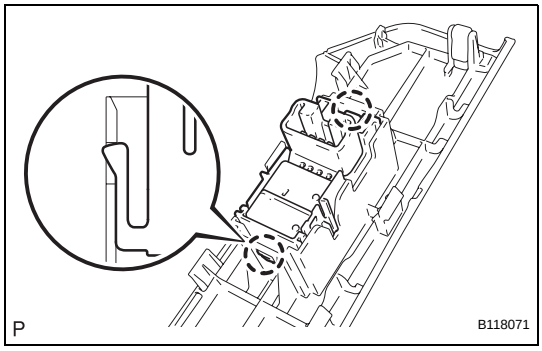

28. INSTALL POWER WINDOW REGULATOR SWITCH ASSEMBLY

(a) Engage the 2 claws and install the power window regulator switch.

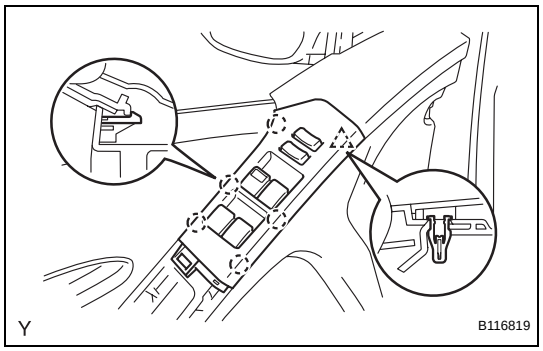

29. INSTALL FRONT ARMREST BASE PANEL UPPER

(a) Connect the connector.

(b) Engage the 5 claws and clip and install the front armrest base panel upper.

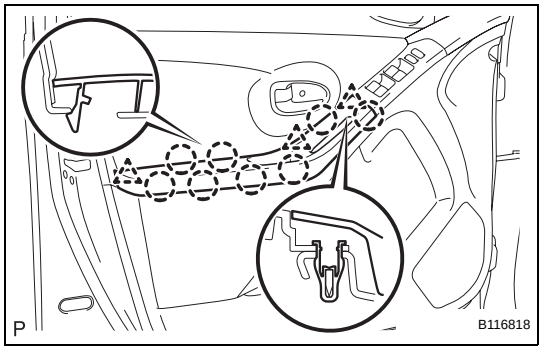

30. INSTALL DOOR ARMREST COVER

(a) for 5 Door:
Engage the 8 claws and 3 clips and install the door armrest cover.

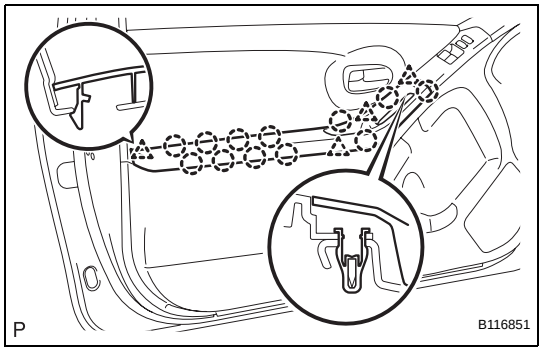

(b) for 3 Door:
Engage the 12 claws and 4 clips and install the door armrest cover.

31. CONNECT CABLE TO NEGATIVE BATTERY TERMINAL
Torque: 5.4 N*m (55 kgf*cm, 48 in.*lbf)

FRONT DOOR (for Hatchback without Power Window)

COMPONENTS

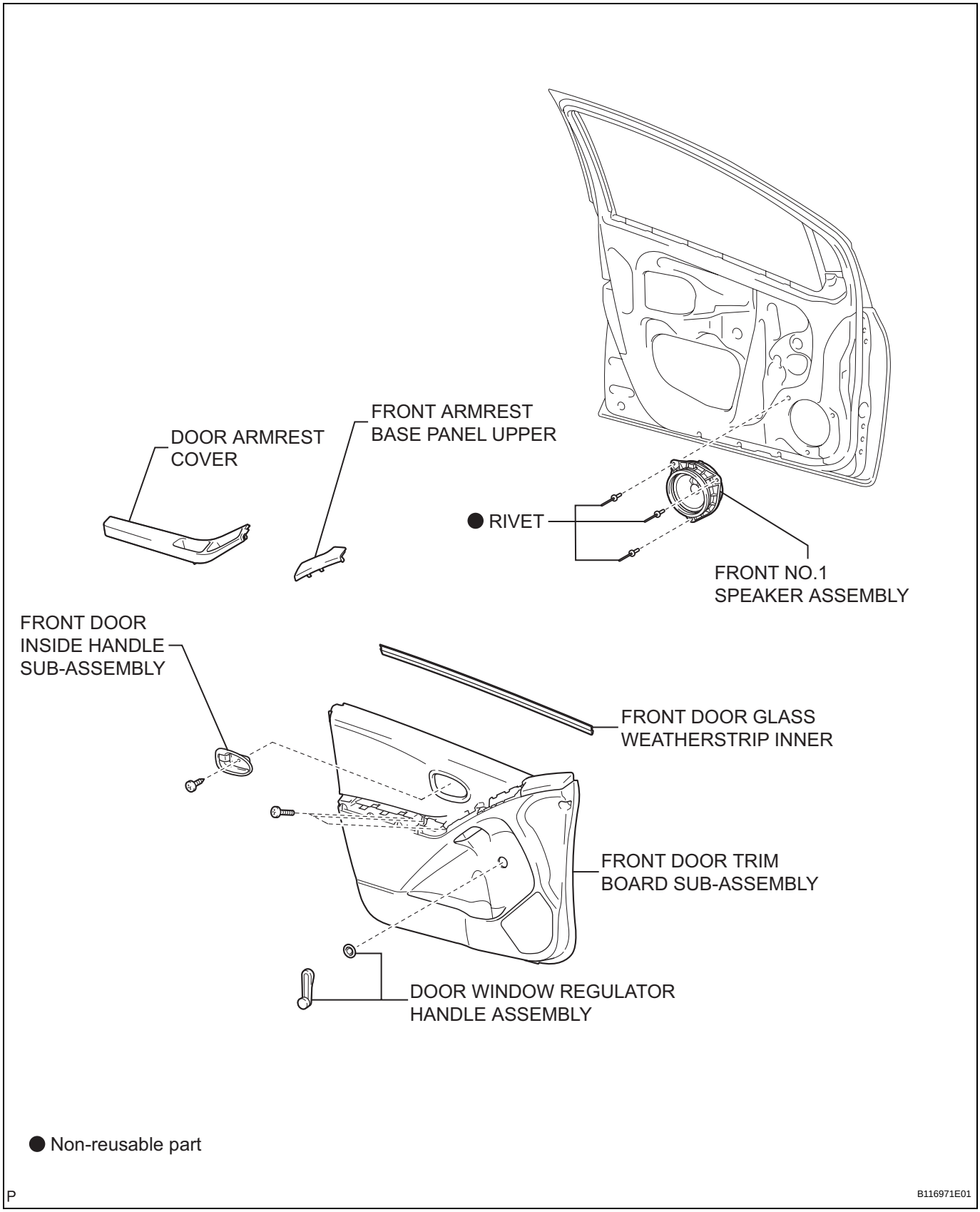

ED

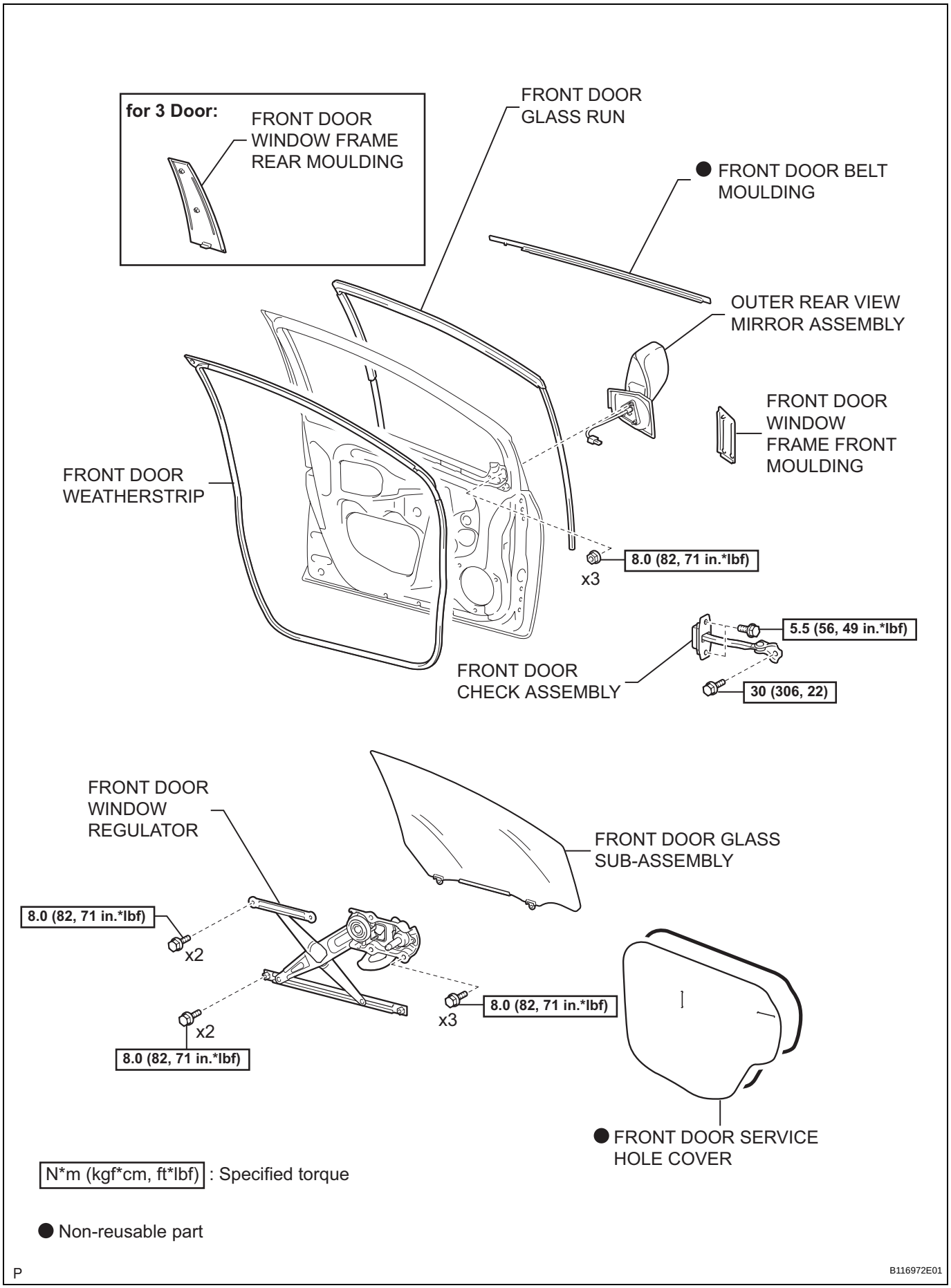
for 3 Door:
FRONT DOOR WINDOW FRAME REAR MOULDING
FRONT DOOR GLASS RUN
● FRONT DOOR BELT MOULDING
OUTER REAR VIEW MIRROR ASSEMBLY
FRONT DOOR WINDOW FRAME FRONT MOULDING
FRONT DOOR WEATHERSTRIP
8.0 (82, 71 in.*lbf)
x3
5.5 (56, 49 in.*lbf)
FRONT DOOR CHECK ASSEMBLY
30 (306, 22)
FRONT DOOR WINDOW REGULATOR
FRONT DOOR GLASS SUB-ASSEMBLY
8.0 (82, 71 in.*lbf)
x2
x2
8.0 (82, 71 in.*lbf)
8.0 (82, 71 in.*lbf)
x3
● FRONT DOOR SERVICE HOLE COVER
N*m (kgf*cm, ft*lbf) : Specified torque
● Non-reusable part
P
B116972E01

ED

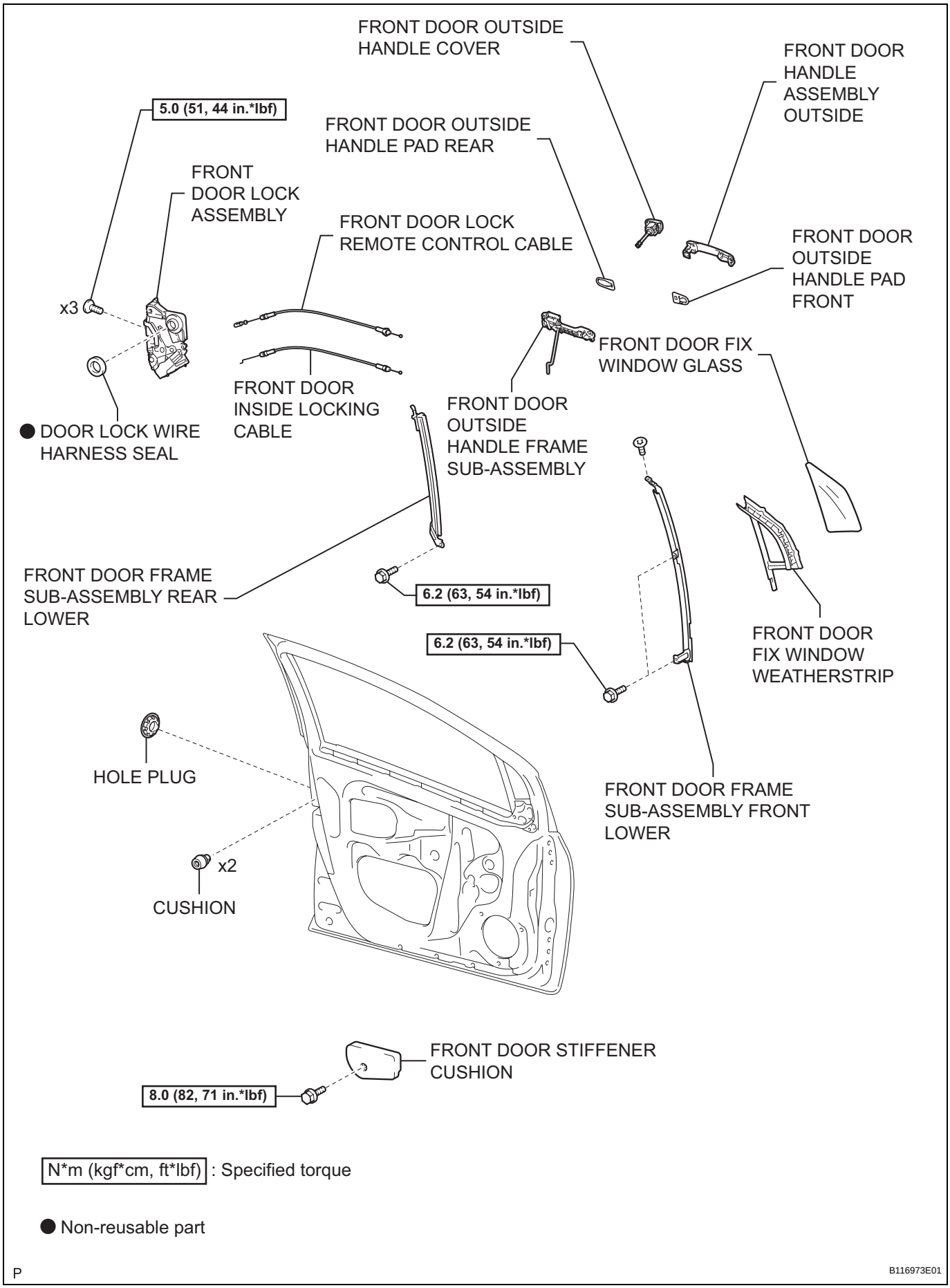
FRONT DOOR OUTSIDE HANDLE COVER
FRONT DOOR HANDLE ASSEMBLY OUTSIDE
5.0 (51, 44 in.*lbf)
FRONT DOOR OUTSIDE HANDLE PAD REAR
FRONT DOOR LOCK ASSEMBLY
FRONT DOOR LOCK REMOTE CONTROL CABLE
FRONT DOOR OUTSIDE HANDLE PAD FRONT
x3
FRONT DOOR FIX WINDOW GLASS
FRONT DOOR INSIDE LOCKING CABLE
FRONT DOOR OUTSIDE HANDLE FRAME SUB-ASSEMBLY
● DOOR LOCK WIRE HARNESS SEAL
FRONT DOOR FRAME SUB-ASSEMBLY REAR LOWER
6.2 (63, 54 in.*lbf)
6.2 (63, 54 in.*lbf)
FRONT DOOR FIX WINDOW WEATHERSTRIP
HOLE PLUG
FRONT DOOR FRAME SUB-ASSEMBLY FRONT LOWER
x2
CUSHION
FRONT DOOR STIFFENER CUSHION
8.0 (82, 71 in.*lbf)
N*m (kgf*cm, ft*lbf) : Specified torque
● Non-reusable part
P
B116973E01

ED

DISASSEMBLY

HINT:
- Use the same procedure for both the RH and LH sides.
- The procedure described below is for the LH side.

1. DISCONNECT CABLE FROM NEGATIVE BATTERY TERMINAL

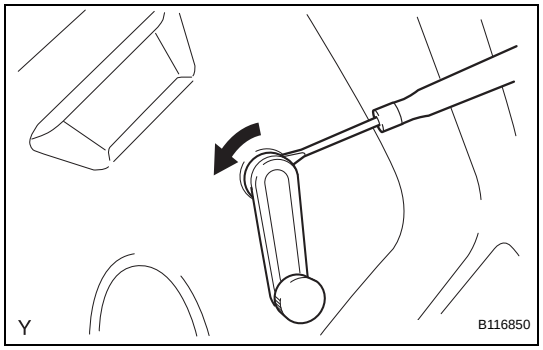

2. REMOVE DOOR WINDOW REGULATOR HANDLE ASSEMBLY
(a) Insert a clip remover between the plate and door trim.
(b) Turn the handle with the clip remover inserted, as shown in the illustration.
(c) Remove the front door window regulator handle and clip.
(d) Remove the window regulator handle plate.

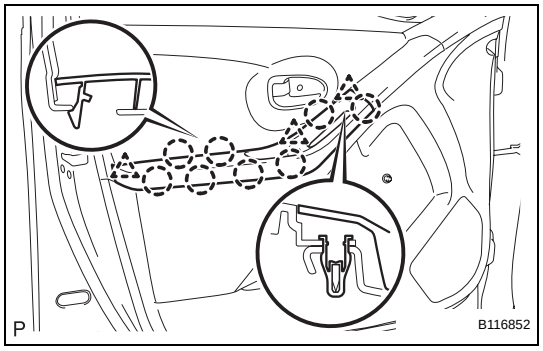

3. REMOVE DOOR ARMREST COVER
(a) for 5 Door:
Using a screwdriver with its tip wrapped in protective tape, disengage the 8 claws and 3 clips and remove the door armrest cover.

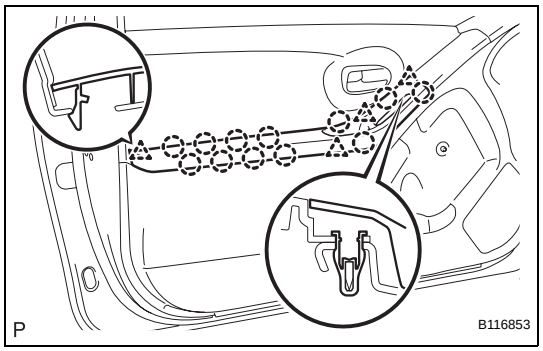

(b) for 3 Door:
Disengage the 12 claws and 4 clips and remove the door armrest cover.

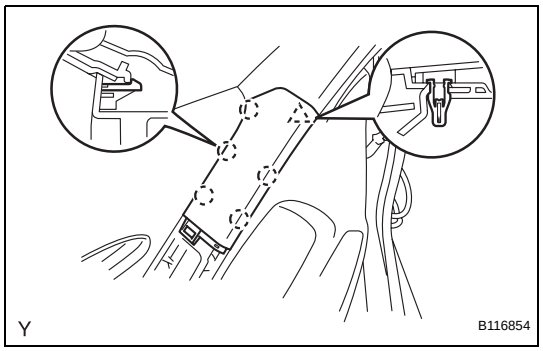

4. REMOVE FRONT ARMREST BASE PANEL UPPER
(a) Using a screwdriver with its tip wrapped in protective tape, disengage the 5 claws and clip and remove the front armrest base panel upper.

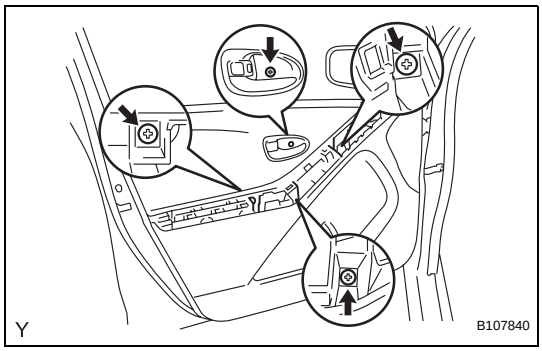

5. REMOVE FRONT DOOR TRIM BOARD SUB-ASSEMBLY

(a) Remove the 4 screws.

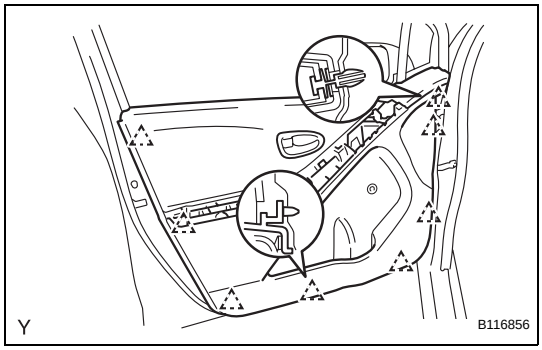

(b) for 5 Door:
Disengage the 8 clips.

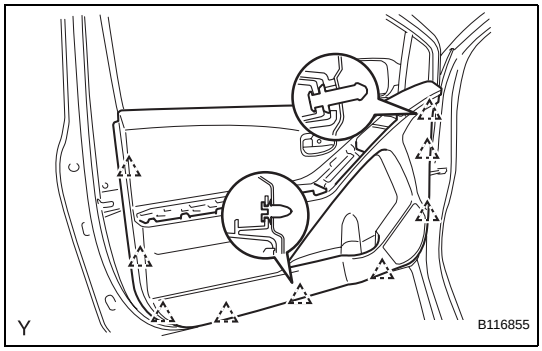

(c) for 3 Door:
Disengage the 9 clips.

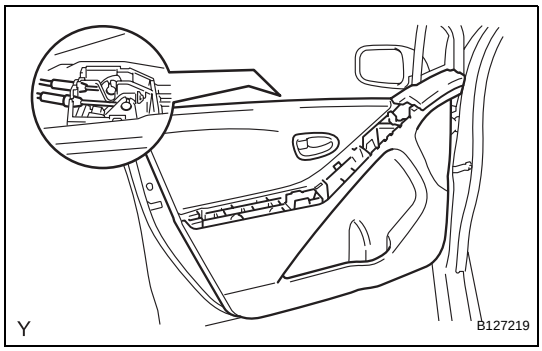

(d) Disconnect the front door lock remote control cable and front door inside locking cable and remove the front door trim board.

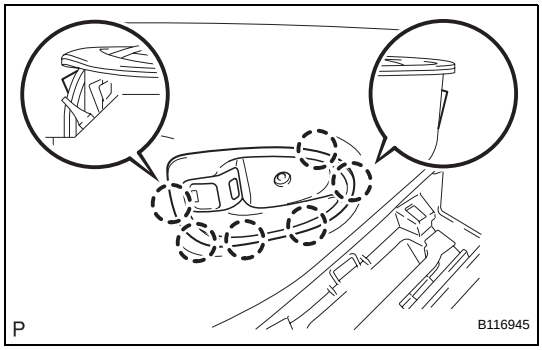

6. REMOVE FRONT DOOR INSIDE HANDLE SUB-ASSEMBLY

(a) Disengage the 6 claws and remove the front door inside handle.

7. REMOVE FRONT DOOR GLASS WEATHERSTRIP INNER

(a) Remove the front door glass weatherstrip inner from the front door trim board.

8. REMOVE FRONT NO.1 SPEAKER ASSEMBLY (See page AV-164)

9. REMOVE FRONT DOOR WINDOW FRAME FRONT MOULDING (See page ET-114)

10. REMOVE FRONT DOOR WINDOW FRAME REAR MOULDING (for 3 Door) (See page ET-114)

11. REMOVE OUTER REAR VIEW MIRROR ASSEMBLY (See page MI-13)

12. REMOVE FRONT DOOR BELT MOULDING (See page ET-91)

13. REMOVE FRONT DOOR SERVICE HOLE COVER

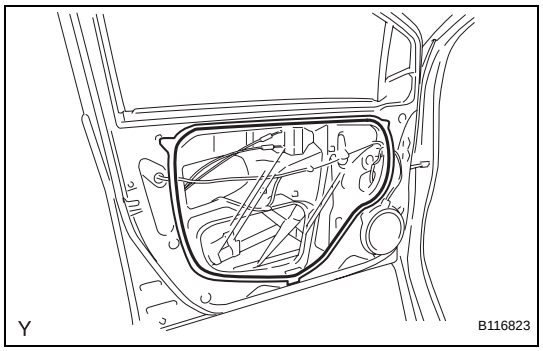

(a) for 5 Door:
Disconnect the connectors and clamps, then remove the front door service hole cover.
NOTICE:
Remove any tape remaining on the door side.

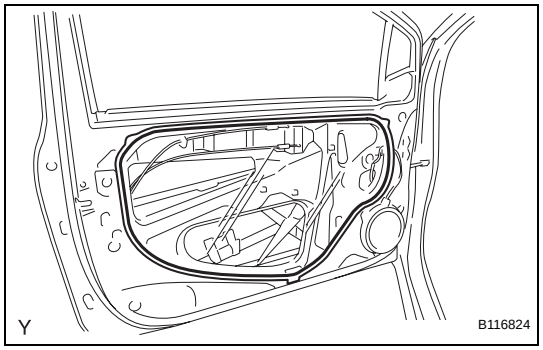

(b) for 3 Door:
Disconnect the connectors and clamps, then remove the front door service hole cover.
NOTICE:
Remove any tape remaining on the door side.

14. REMOVE FRONT DOOR GLASS SUB-ASSEMBLY

(a) Provisionally install the front door window regulator handle.

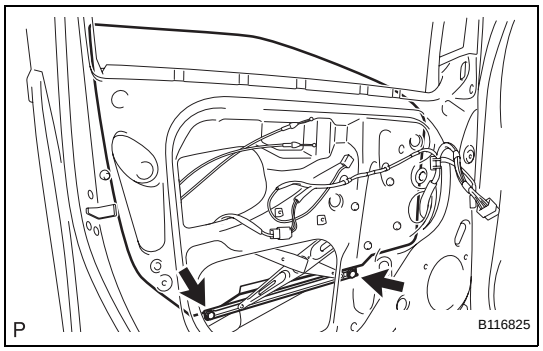

(b) Move the front door glass until the 2 bolts appear in the service holes.

(c) Remove the 2 bolts.
NOTICE:
Do not drop or damage the front door glass when removing the 2 bolts.

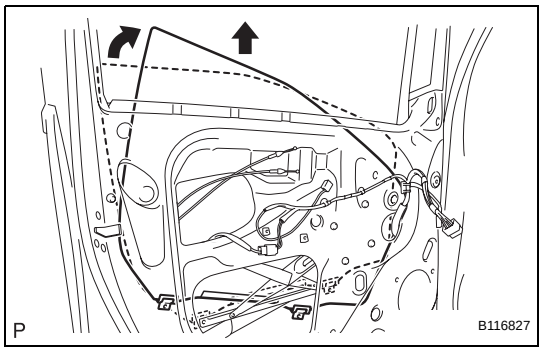

(d) Remove the front door glass in the direction indicated by the arrows in the illustration.
NOTICE:
Do not damage the glass.

(e) Remove the front door window regulator handle.

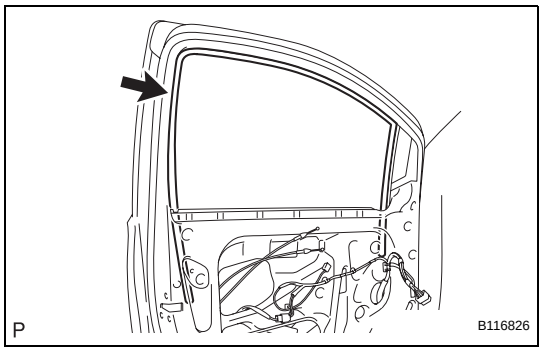

15. REMOVE FRONT DOOR GLASS RUN

(a) Remove the front door glass run.

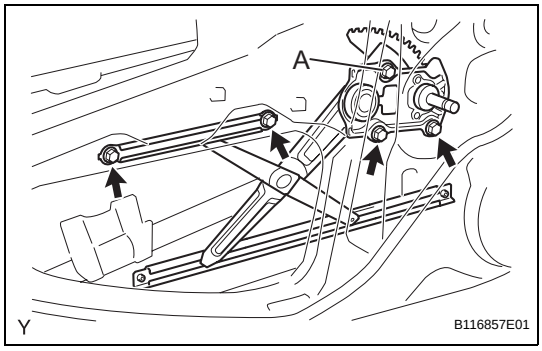

16. REMOVE FRONT DOOR WINDOW REGULATOR

(a) Loosen bolt A.

(b) Remove the 4 bolts, then remove the front door window regulator.

NOTICE:

Do not drop or damage the window regulator when removing the bolts.

HINT:

Remove the window regulator through the service hole.

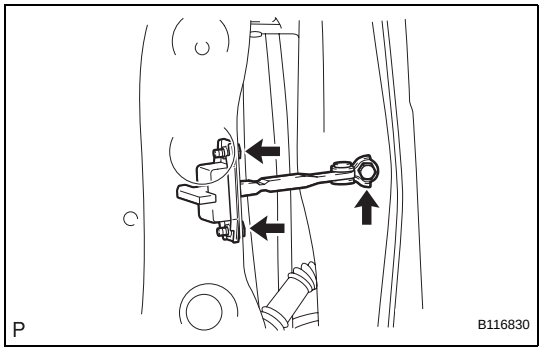

17. REMOVE FRONT DOOR CHECK ASSEMBLY

(a) Remove the 3 bolts, then remove the front door check.

NOTICE:

Do not drop or damage the door check when removing the bolts.

HINT:

Remove the door check through the service hole.

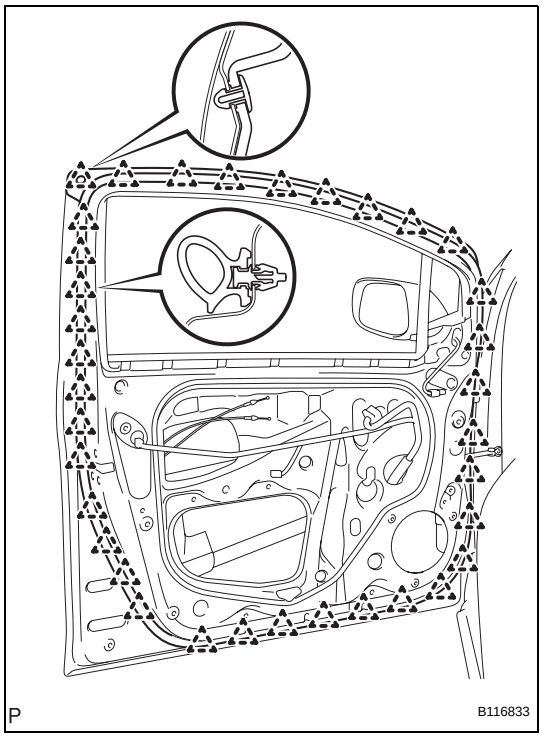

18. REMOVE FRONT DOOR WEATHERSTRIP

(a) for 5 Door:

Disengage the 35 clips and remove the front door weatherstrip.

NOTICE:

Remove any tape remaining on the door side.

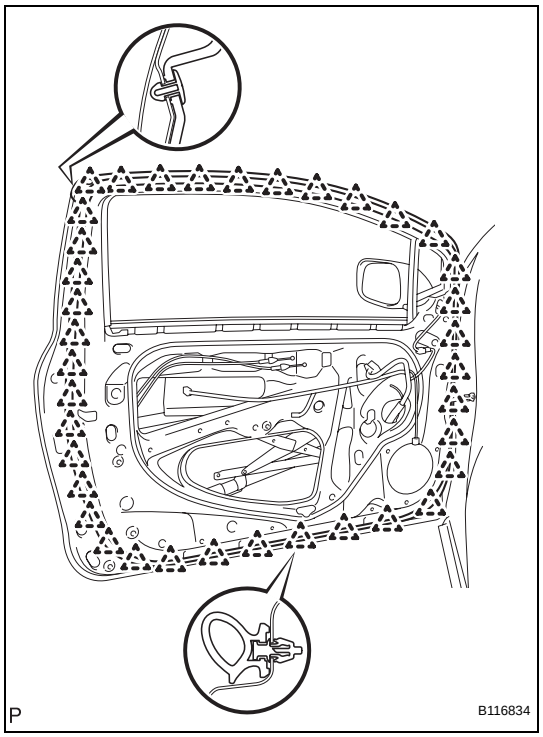

(b) for 3 Door:
Disengage the 37 clips and remove the front door weatherstrip.
NOTICE:
Remove any tape remaining on the door side.

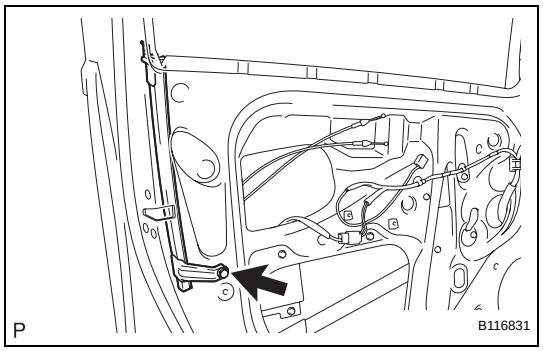

19. REMOVE FRONT DOOR FRAME SUB-ASSEMBLY REAR LOWER

(a) Remove the bolt, then remove the front door frame sub-assembly rear lower.
NOTICE:
Do not drop or damage the front door frame sub-assembly rear lower when removing the bolt.
HINT:
Remove the front door frame sub-assembly rear lower through the service hole.

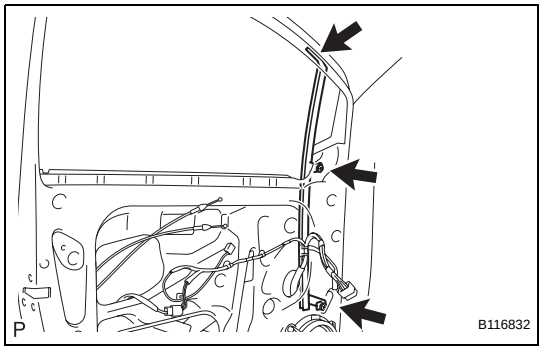

20. REMOVE FRONT DOOR FRAME SUB-ASSEMBLY FRONT LOWER

(a) Remove the 2 bolts and screw, then remove the front door frame sub-assembly front lower.
NOTICE:
Do not drop or damage the front door frame sub-assembly front lower when removing the bolts and screw.
HINT:
Remove the front door frame sub-assembly front lower through the service hole.

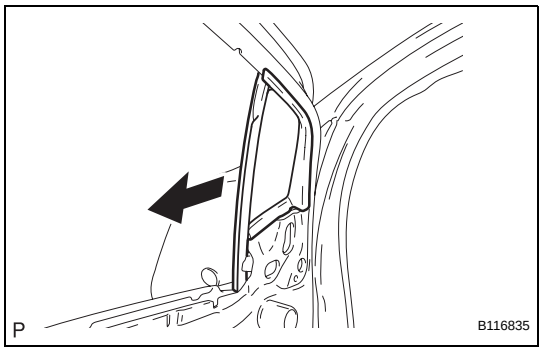

21. REMOVE FRONT DOOR FIX WINDOW WEATHERSTRIP

(a) Slide the front door fix window weatherstrip, in the direction indicated by the arrow in the illustration, to remove it.

(b) Remove the front door fix window glass from the front door fix window weatherstrip.

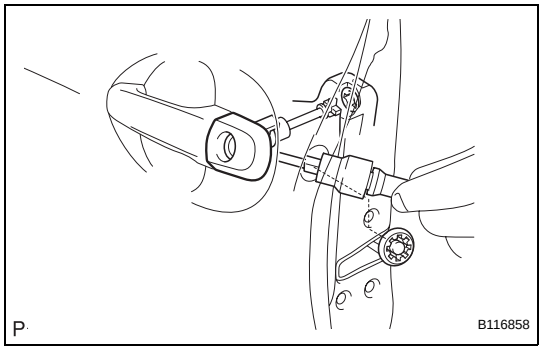

22. REMOVE FRONT DOOR OUTSIDE HANDLE COVER

(a) Remove the hole plug.

(b) Using "Torx" socket wrench T30, loosen the screw and remove the cover with the door lock key cylinder installed.

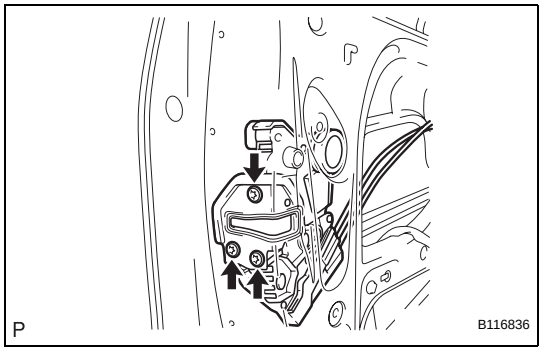

23. REMOVE FRONT DOOR LOCK ASSEMBLY

(a) Using "Torx" socket wrench T30, remove the 3 screws.

(b) Move the front door lock downward, remove the outside handle frame link and remove the front door lock.

NOTICE:

Do not drop or damage the door lock when removing the screws.

HINT:

Remove the front door lock through the service hole.

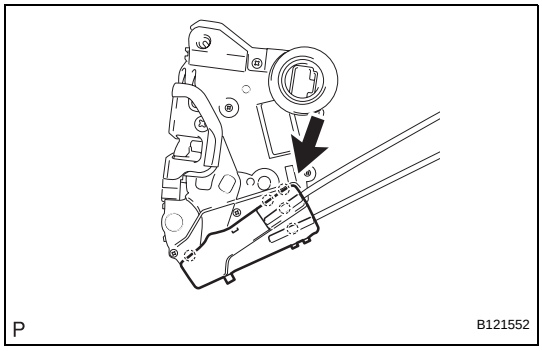

(c) Disengage the 5 claws and open the cover.

ED

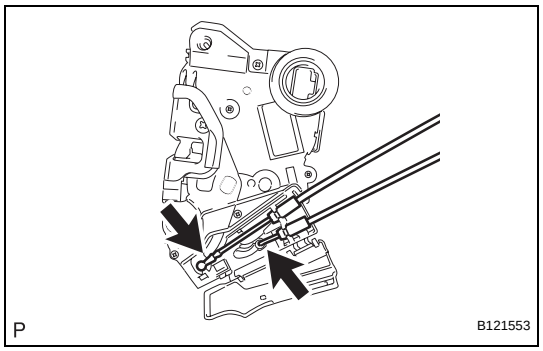

(d) Disconnect the front door lock remote control cable and front door inside locking cable.
(e) Remove the door lock wire harness seal.

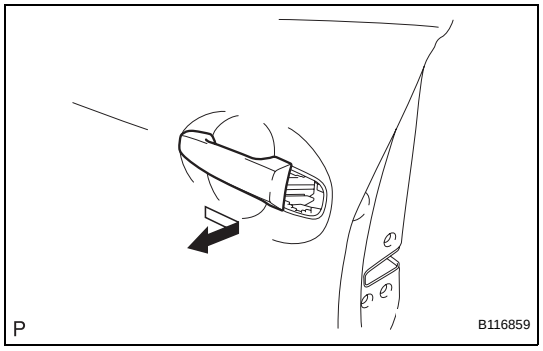

24. REMOVE FRONT DOOR HANDLE ASSEMBLY OUTSIDE

(a) Remove the handle by sliding and pulling it in the direction indicated by the arrow mark in the illustration.

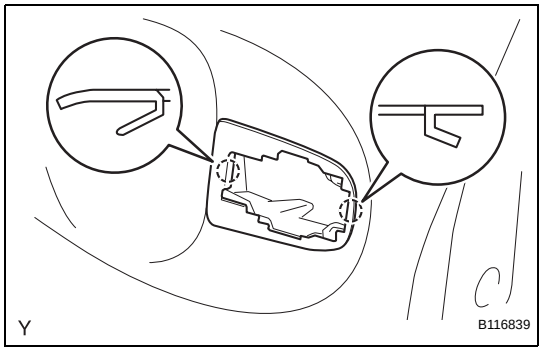

25. REMOVE FRONT DOOR OUTSIDE HANDLE PAD REAR

(a) Disengage the 2 claws and remove the front door outside handle pad rear.

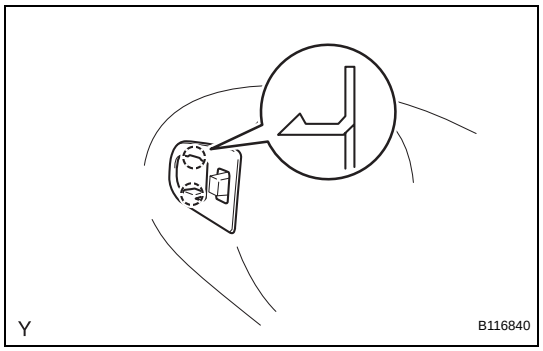

26. REMOVE FRONT DOOR OUTSIDE HANDLE PAD FRONT

(a) Disengage the 2 claws and remove the front door outside handle pad front.

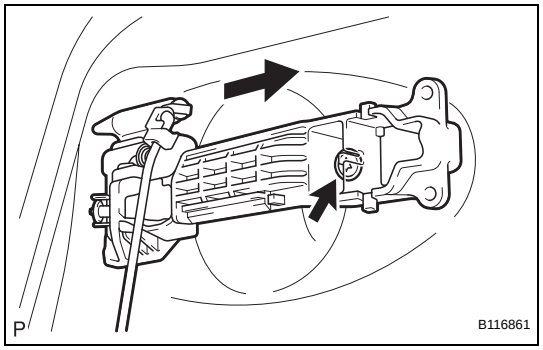

27. REMOVE FRONT DOOR OUTSIDE HANDLE FRAME SUB-ASSEMBLY

(a) Using "Torx" socket wrench T30, loosen the screw.
(b) Slide the outside handle frame to remove it.

28. REMOVE CUSHION

(a) Remove the 2 cushions from the door panel.

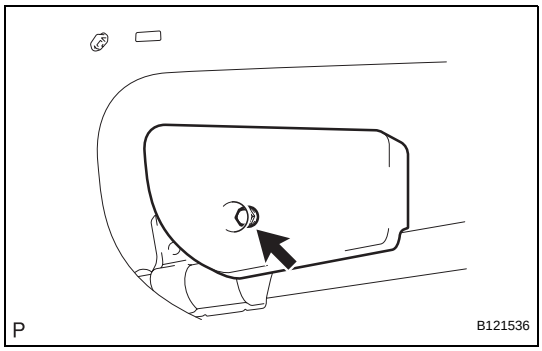

29. REMOVE FRONT DOOR STIFFENER CUSHION

(a) Remove the bolt and front door stiffener cushion.

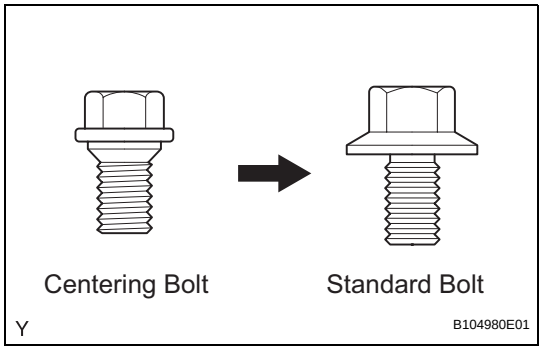

ADJUSTMENT

HINT:

- Before adjusting the door position on vehicles equipped with side airbags and curtain shield airbags, be sure to disconnect the battery. After adjustment, inspect the SRS warning light, the side airbag system and the curtain shield airbag system for normal operation. Then initialize both airbag systems.
- Use the same procedure for the RH and LH sides.
- The procedures described below are for the LH side.
- Centering bolts are used to mount the door hinge onto the vehicle body and door. The door cannot be adjusted with the centering bolts on. Substitute standard bolts (with washers) for the centering bolts when making adjustments.
- For bolts without torque specifications, check the standard bolt chart.

1. INSPECT FRONT DOOR (for 5 Door)

(a) Check that the clearance measurements are within the standard ranges.

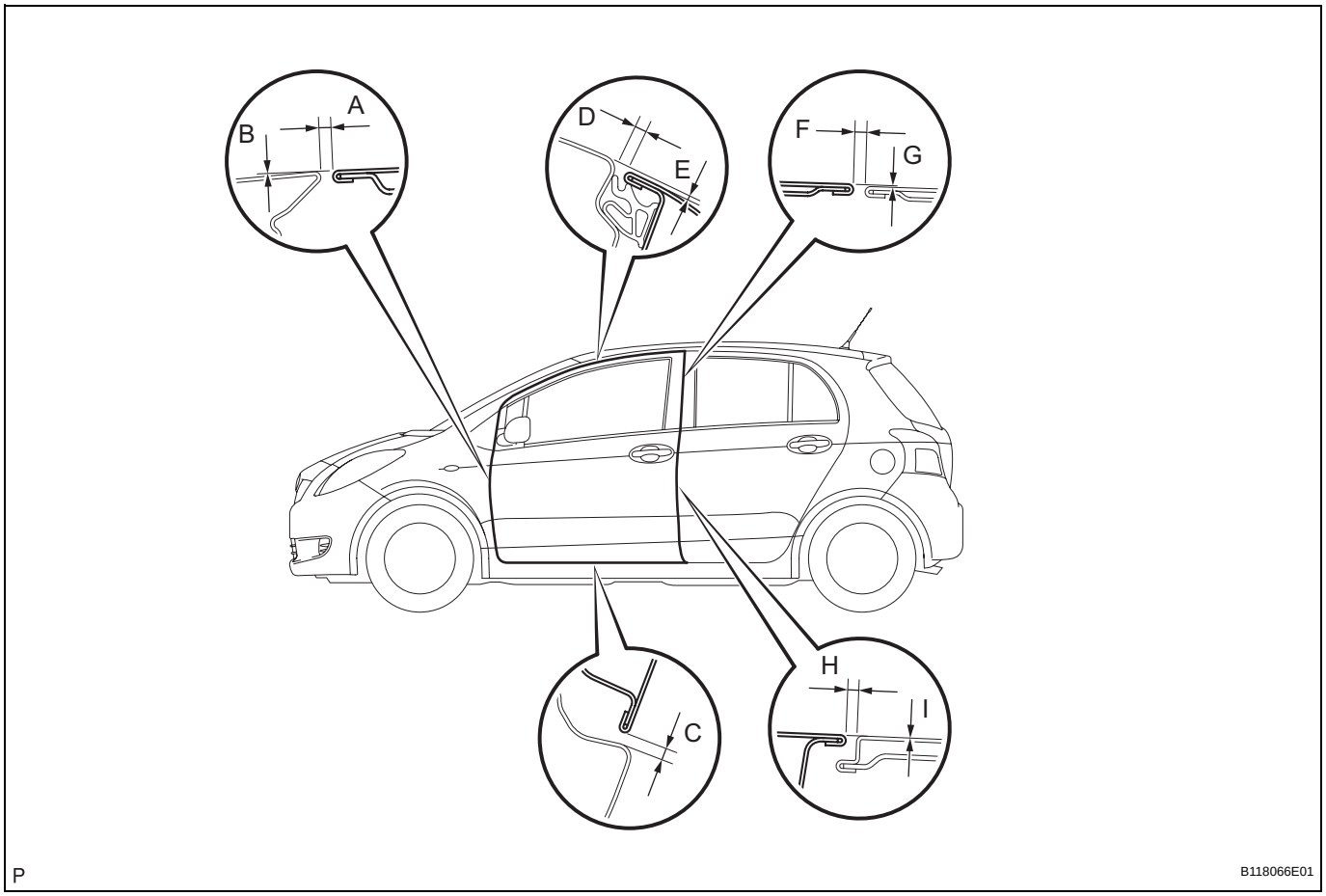

Standard

Area	Measurement	Area	Measurement
A	2.5 to 5.5 mm (0.098 to 0.217 in.)	F	3.3 to 6.3 mm (0.130 to 0.248 in.)
B	-1.5 to 1.5 mm (-0.059 to 0.059 in.)	G	-1.5 to 1.5 mm (-0.059 to 0.059 in.)
C	4.1 to 7.1 mm (0.161 to 0.280 in.)	H	3.3 to 6.3 mm (0.130 to 0.248 in.)
D	3.5 to 6.5 mm (0.138 to 0.256 in.)	I	-1.5 to 1.5 mm (-0.059 to 0.059 in.)
E	2.8 mm (0.110 in.)	-	-

2. REMOVE FRONT DOOR (for 3 Door)

(a) Check that the clearance measurements are within the standard ranges.

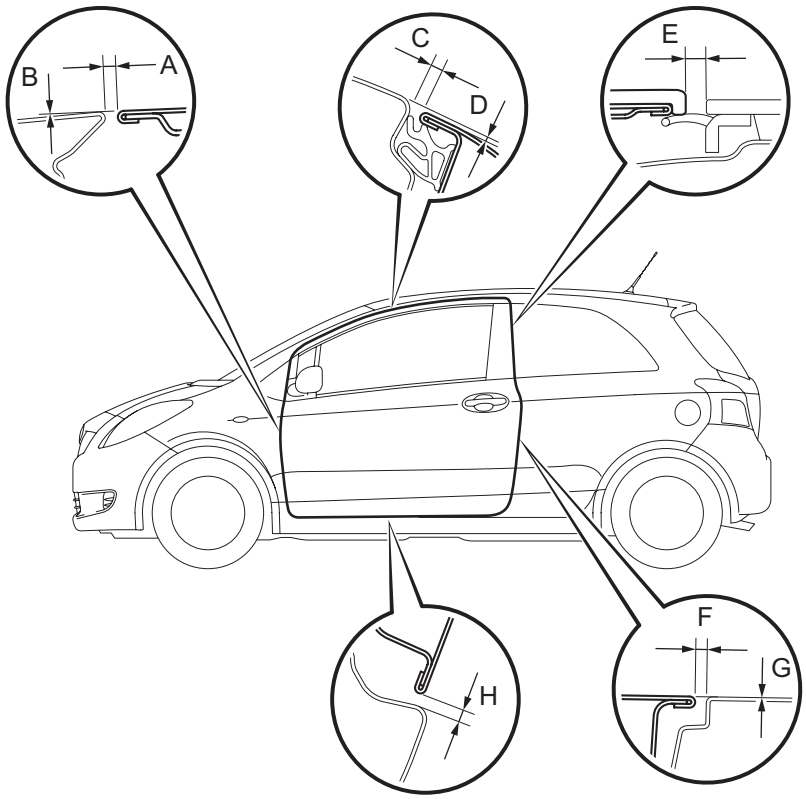

Standard

Area	Measurement	Area	Measurement
A	2.5 to 5.5 mm (0.098 to 0.217 in.)	E	2.8 to 5.8 mm (0.110 to 0.228 in.)
B	-1.5 to 1.5 mm (-0.059 to 0.059 in.)	F	2.5 to 5.5 mm (0.098 to 0.217 in.)
C	3.5 to 6.5 mm (0.138 to 0.256 in.)	G	-1.5 to 1.5 mm (-0.059 to 0.059 in.)
D	2.8 mm (0.110 in.)	H	4.1 to 7.1 mm (0.161 to 0.280 in.)

3. ADJUST FRONT DOOR

(a) Disconnect the cable from the negative battery terminal.
Wait for at least 90 seconds after disconnecting the cable to prevent the airbag from working.

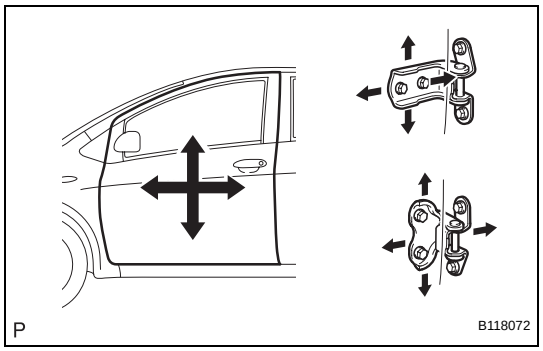

(b) Using SST, adjust the door horizontally and vertically by loosening the body side hinge bolts.
SST 09812-00010

(c) Tighten the body side hinge bolts after the adjustment.
Torque: 26 N*m (265 kgf*cm, 19 ft.*lbf)

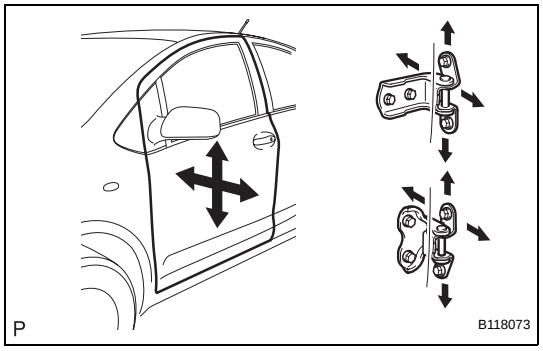

(d) Adjust the door horizontally and vertically by loosening the door side hinge bolts.

(e) Tighten the door side hinge bolts after the adjustment.
Torque: 26 N*m (265 kgf*cm, 19 ft.*lbf)

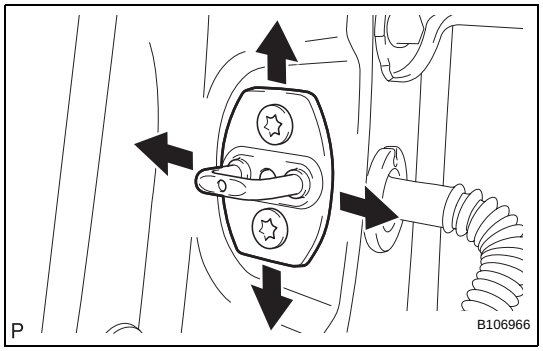

(f) Using "Torx" socket wrench T40, adjust the striker position by slightly loosening the striker mounting screws and hitting the striker with a plastic-faced hammer.

(g) Using "Torx" socket wrench T40, tighten the striker mounting screws after the adjustment.
Torque: 23 N*m (235 kgf*cm, 17 ft.*lbf)

(h) Connect the cable to the negative battery terminal.
Torque: 5.4 N*m (55 kgf*cm, 48 in.*lbf)

REASSEMBLY

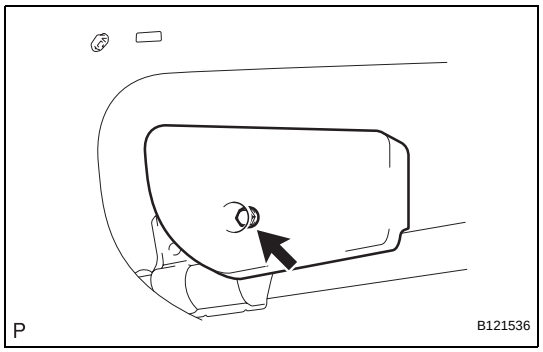

1. INSTALL FRONT DOOR STIFFENER CUSHION

(a) Install the front door stiffener cushion with the bolt.
Torque: 8.0 N*m (82 kgf*cm, 71 in.*lbf)

2. INSTALL CUSHION

(a) Install the cushion onto the door panel.

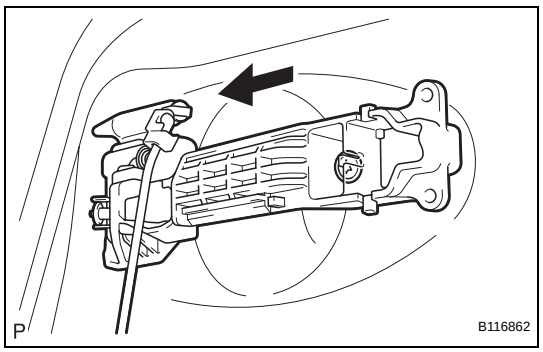

3. INSTALL FRONT DOOR OUTSIDE HANDLE FRAME SUB-ASSEMBLY

(a) Using "Torx" socket wrench T30, install the front outside handle frame with the screw.
Torque: 4.0 N*m (41 kgf*cm, 35 in.*lbf)

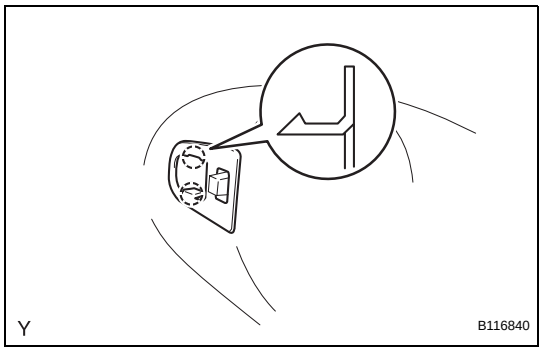

4. INSTALL FRONT DOOR OUTSIDE HANDLE PAD FRONT

(a) Engage the 2 claws and install the front door outside handle pad front.

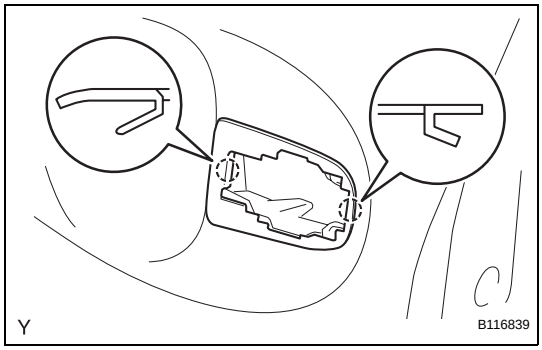

5. INSTALL FRONT DOOR OUTSIDE HANDLE PAD REAR

(a) Engage the 2 claws and install the front door outside handle pad rear.

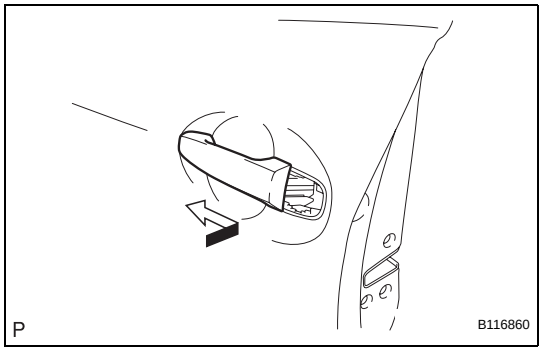

6. INSTALL FRONT DOOR HANDLE ASSEMBLY OUTSIDE

(a) Pushing the front door handle assembly outside in the direction of the arrow mark shown in the illustration, install the front door handle assembly outside.

7. INSTALL FRONT DOOR LOCK ASSEMBLY

NOTICE:

- **If reusing a door lock that has been removed, replace the packing in the connecting part with new.**
- **Make sure that no grease and dirt adheres to the packing surface in the connecting part.**

(a) Apply MP grease to the sliding and rotating areas of the front door lock.

(b) Connect the front door lock remote control cable and front door inside locking cable.

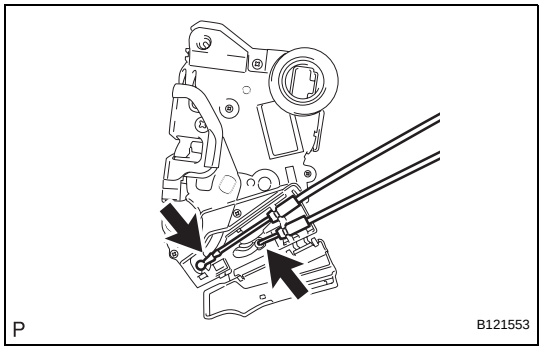

ED

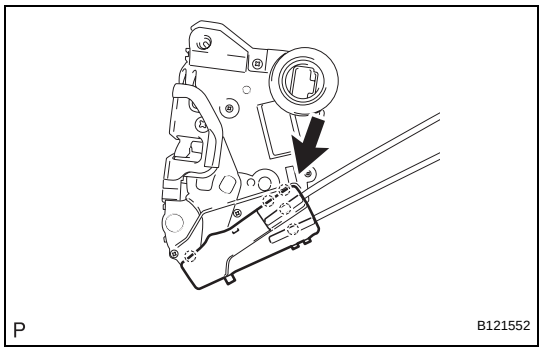

(c) Engage the 5 claws and close the cover.

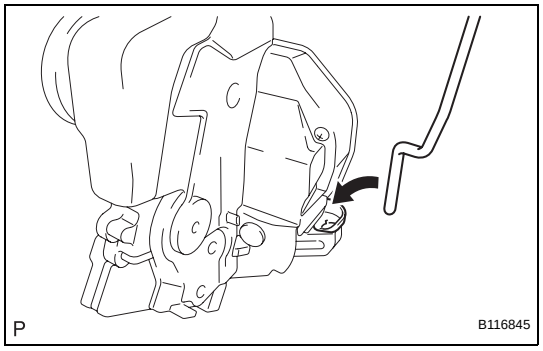

(d) Insert the door lock open rod into the front door lock, then set it to the door panel.
NOTICE:
Make sure that the outside handle link is securely engaged with the door lock.

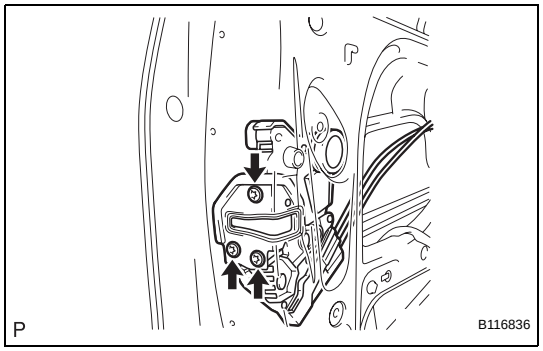

(e) Apply adhesive to the threads of the screws.
Adhesive:
Part No. 08833-00070, THREE BOND 1324 or the equivalent

(f) Using "Torx" socket wrench T30, install the front door lock with the 3 screws.
Torque: 5.0 N*m (51 kgf*cm, 44 in.*lbf)

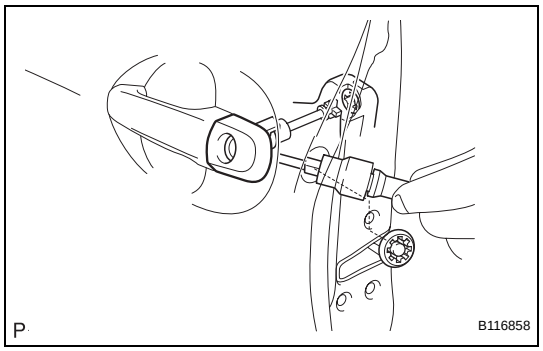

8. INSTALL FRONT DOOR OUTSIDE HANDLE COVER

(a) Using "Torx" socket wrench T30, install the cover with the door lock key cylinder.
Torque: 4.0 N*m (41 kgf*cm, 35 in.*lbf)
HINT:
Make sure that the door lock key cylinder rod is inserted.

(b) Install the hole plug.

9. INSTALL FRONT DOOR FIX WINDOW WEATHERSTRIP

(a) Install the front door fix window glass onto the front door fix window weatherstrip.

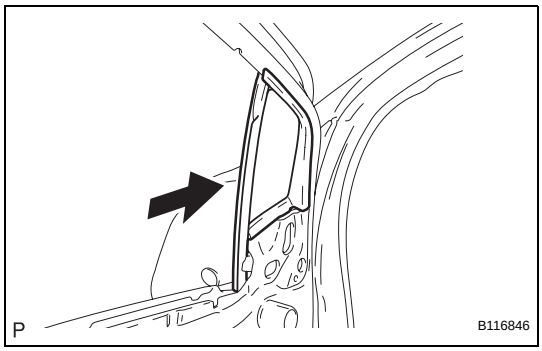

(b) Slide the front door fix window weatherstrip, in the direction indicated by the arrow in the illustration, to install it.

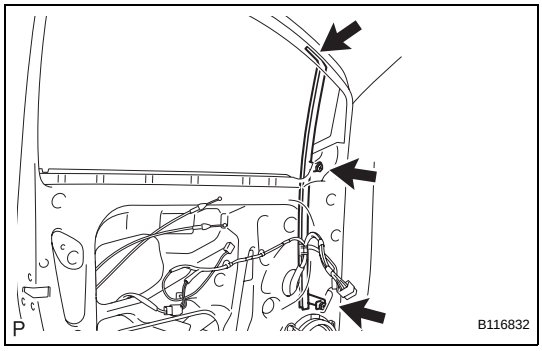

10. INSTALL FRONT DOOR FRAME SUB-ASSEMBLY FRONT LOWER

(a) Install the front door frame sub-assembly front lower with the 2 bolts and screw.
Torque: 6.2 N*m (63 kgf*cm, 54 in.*lbf)

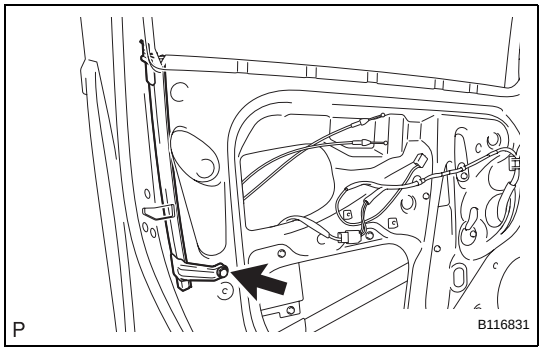

11. INSTALL FRONT DOOR FRAME SUB-ASSEMBLY REAR LOWER

(a) Install the front door frame sub-assembly rear lower with the bolt.
Torque: 6.2 N*m (63 kgf*cm, 54 in.*lbf)

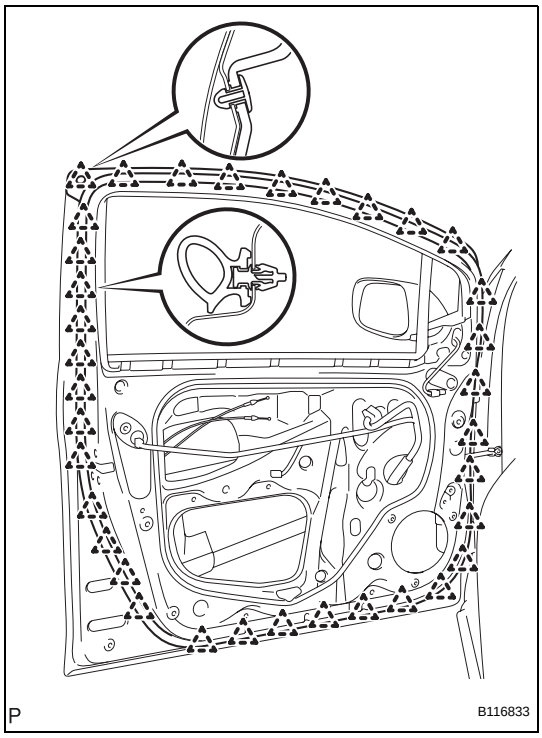

12. INSTALL FRONT DOOR WEATHERSTRIP

(a) for 5 Door:
Engage the 35 clips and install the front door weatherstrip.

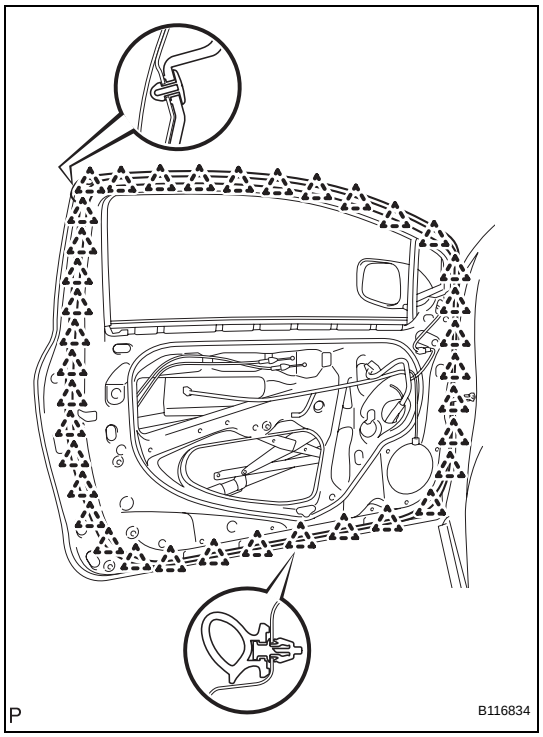

(b) for 3 Door:
Engage the 37 clips and install the front door weatherstrip.

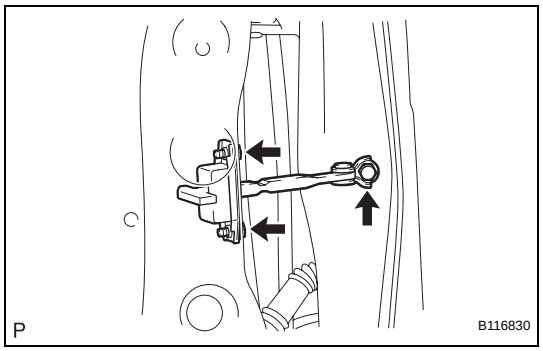

13. INSTALL FRONT DOOR CHECK ASSEMBLY

(a) Apply MP grease to the sliding areas of the door check.

(b) Install the front door check onto the door panel with the 2 bolts.
Torque: 5.5 N*m (56 kgf*cm, 49 in.*lbf)

(c) Apply adhesive to the threads of the bolt.
Adhesive:
Part No. 08833-00070, THREE BOND 1324 or the equivalent

(d) Install the front door check onto the body panel with the bolt.
Torque: 30 N*m (306 kgf*cm, 22 ft.*lbf)

14. INSTALL FRONT DOOR WINDOW REGULATOR

(a) Apply MP grease to the sliding and rotating areas of the front door window regulator sub-assembly.
NOTICE:
Do not apply grease to the window regulator spring.

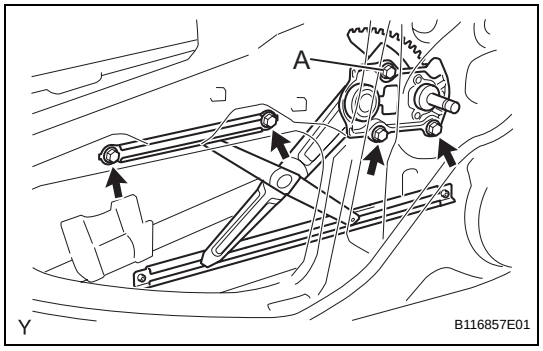

(b) Loosely screw bolt A onto the front door window regulator sub-assembly.

(c) Insert the front door window regulator into the door panel. Use bolt A to hang the front door window regulator on the door panel.
NOTICE:
Do not drop the window regulator as it may be damaged.

(d) Install the front door window regulator with the 4 bolts, and tighten bolt A.
Torque: 8.0 N*m (82 kgf*cm, 71 in.*lbf)

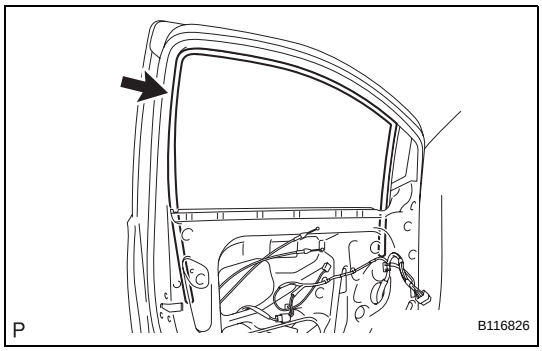

15. INSTALL FRONT DOOR GLASS RUN

(a) Install the front door glass run.

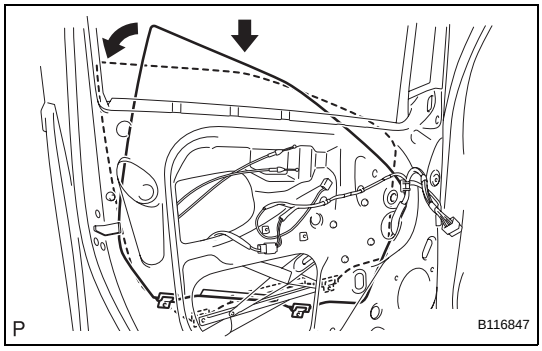

16. INSTALL FRONT DOOR GLASS SUB-ASSEMBLY

(a) Insert the door glass into the door panel along the glass run as indicated by the arrows in the illustration.
NOTICE:
Do not damage the glass.

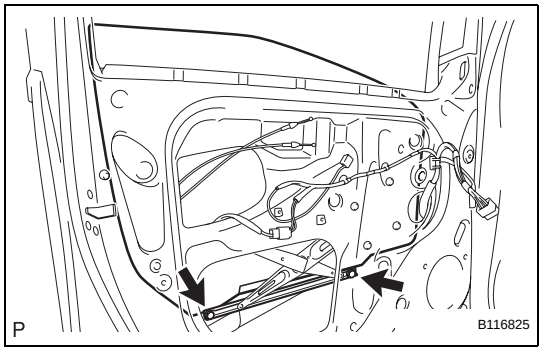

(b) Install the front door glass onto the front door window regulator with the 2 bolts.
Torque: 8.0 N*m (82 kgf*cm, 71 in.*lbf)

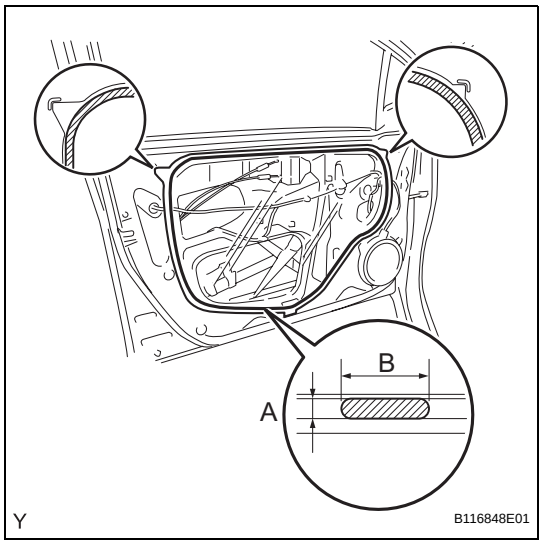

17. INSTALL FRONT DOOR SERVICE HOLE COVER

(a) for 5 Door:
Apply butyl tape to the door panel, then install the front door service hole cover as shown in the illustration.
Adhesive:
Part No. 08850-00065, Butyl Tape Set or the equivalent
Specification

Area	Dimension
A	2.0 mm (0.079 in.) or more
B	6.0 mm (0.236 in.) or more

HINT:
- When installing the service hole cover, pull the links and connectors out through the service hole.
- There should be no wrinkles or folds after attaching the service hole cover.
- After attaching the service hole cover, check the quality of the seal.

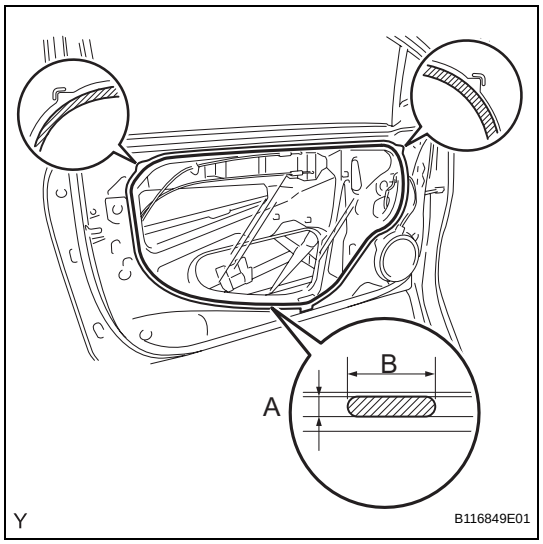

(b) for 3 Door:
Apply butyl tape to the door panel, then install the front door service hole cover as shown in the illustration.
Adhesive:
Part No. 08850-00065, Butyl Tape Set or the equivalent
Specification

Area	Dimension
A	2.0 mm (0.079 in.) or more
B	6.0 mm (0.236 in.) or more

HINT:
- When installing the service hole cover, pull the links and connectors out through the service hole.
- There should be no wrinkles or folds after attaching the service hole cover.
- After attaching the service hole cover, check the quality of the seal.

18. INSTALL FRONT DOOR BELT MOULDING (See page ET-92)

19. INSTALL OUTER REAR VIEW MIRROR ASSEMBLY (See page MI-16)

20. INSTALL FRONT DOOR WINDOW FRAME REAR MOULDING (for 3 Door) (See page ET-114)

21. INSTALL FRONT DOOR WINDOW FRAME FRONT MOULDING (See page ET-115)

22. INSTALL FRONT NO.1 SPEAKER ASSEMBLY (See page AV-164)

23. INSTALL FRONT DOOR GLASS WEATHERSTRIP INNER
(a) Install the front door glass weatherstrip inner onto the front door trim board.

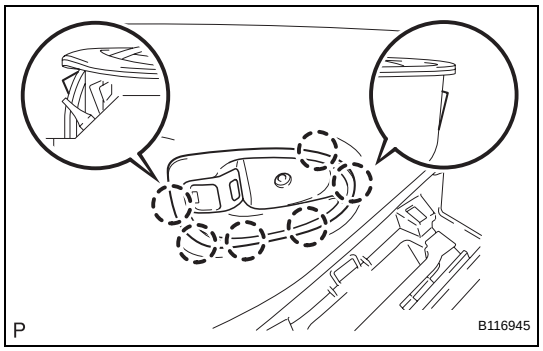

24. INSTALL FRONT DOOR INSIDE HANDLE SUB-ASSEMBLY
(a) Engage the 6 claws and install the front door inside handle.

ED

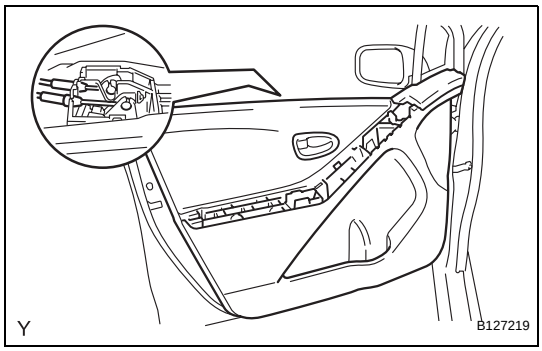

25. INSTALL FRONT DOOR TRIM BOARD SUB-ASSEMBLY

(a) Connect the front door lock remote control cable and front door inside locking cable.

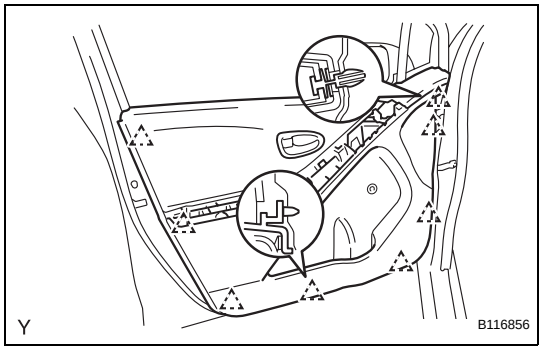

(b) for 5 Door:
Engage the 8 clips and install the front door trim board.

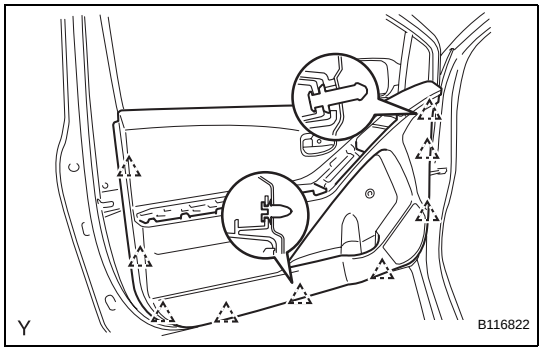

(c) for 3 Door:
Engage the 9 clips and install the front door trim board.

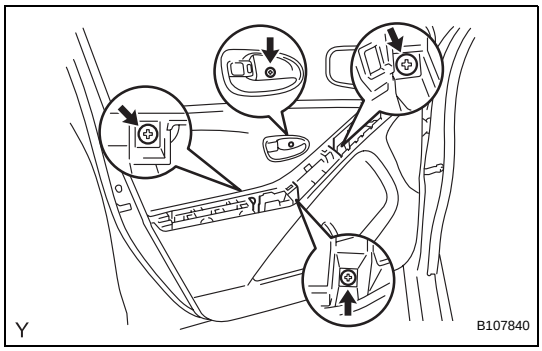

(d) Tighten the 4 screws.

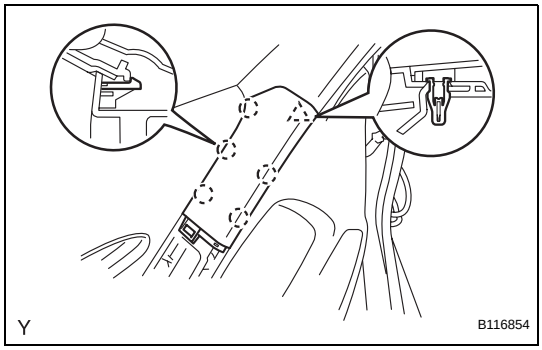

26. INSTALL FRONT ARMREST BASE PANEL UPPER

(a) Engage the 5 claws and clip and install the front door armrest base panel upper.

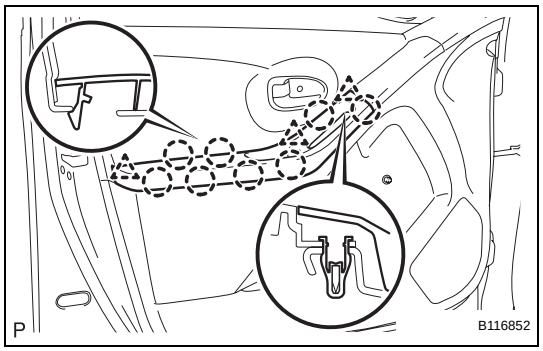

27. INSTALL DOOR ARMREST COVER

(a) for 5 Door:
Engage the 8 claws and 3 clips and install the door armrest cover.

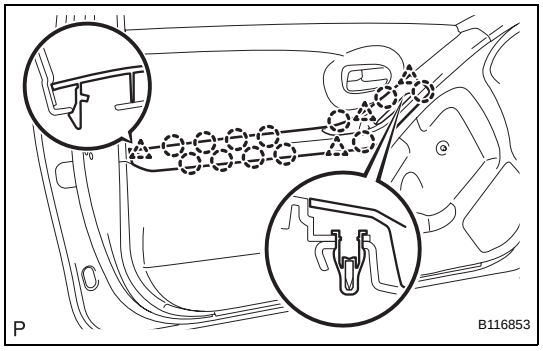

(b) for 3 Door:
Engage the 12 claws and 4 clips and install the door armrest cover.

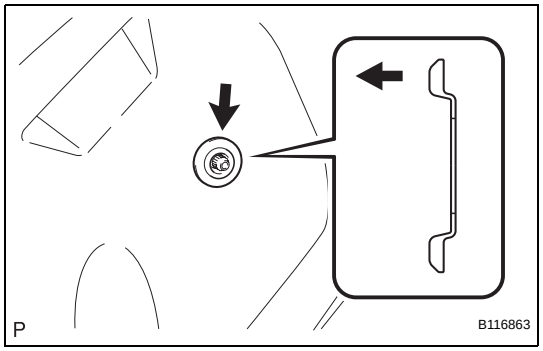

28. INSTALL DOOR WINDOW REGULATOR HANDLE ASSEMBLY

(a) Install the window regulator handle plate.
(b) Open all the windows.

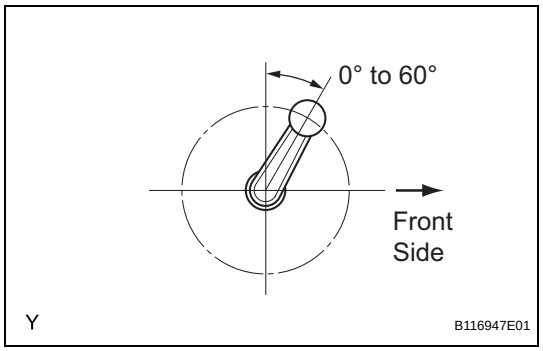

(c) Install the front door window regulator handle with the clip at the angle shown in the illustration.

29. CONNECT CABLE TO NEGATIVE BATTERY TERMINAL
Torque: 5.4 N*m (55 kgf*cm, 48 in.*lbf)

REAR DOOR (for Sedan)

COMPONENTS

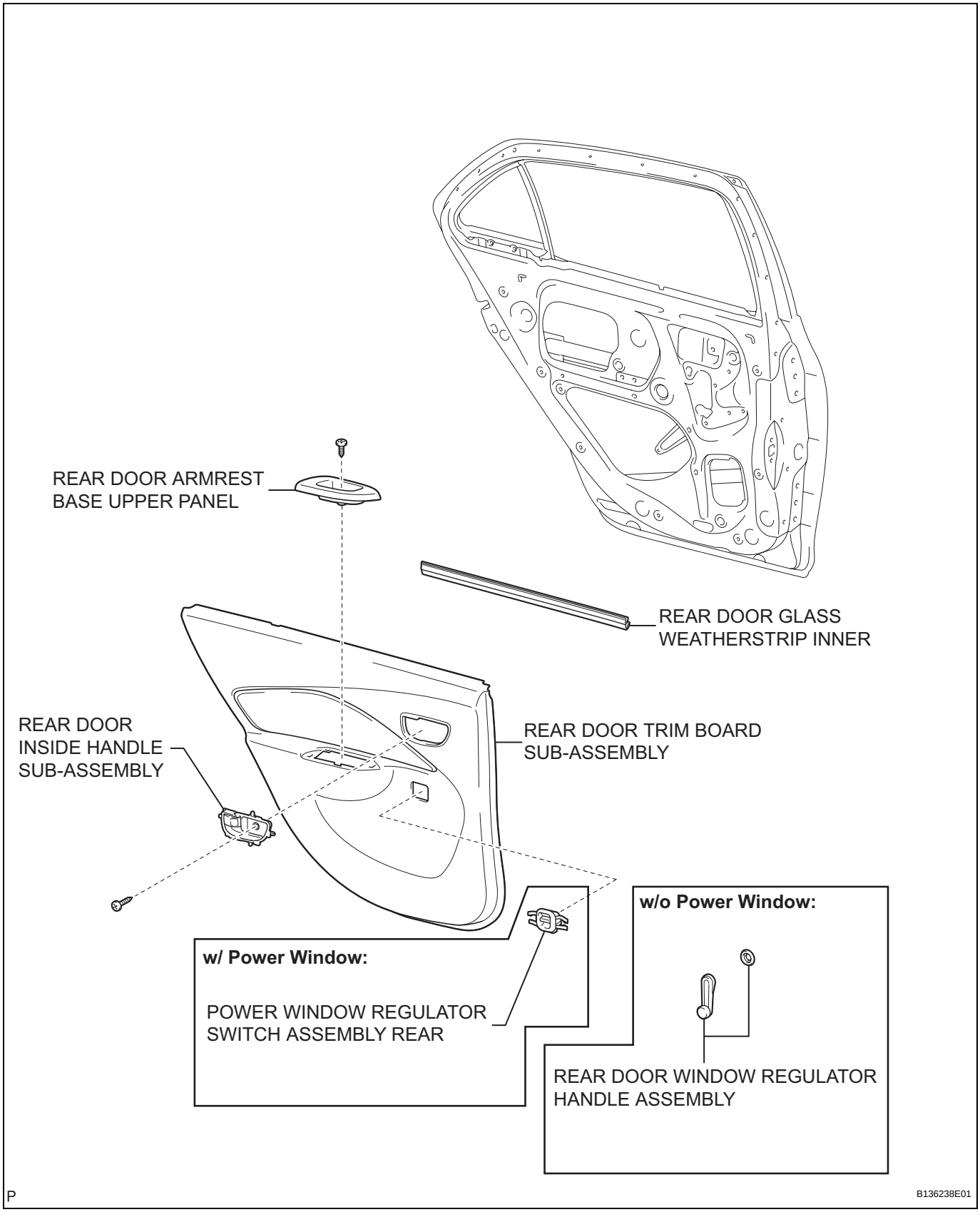

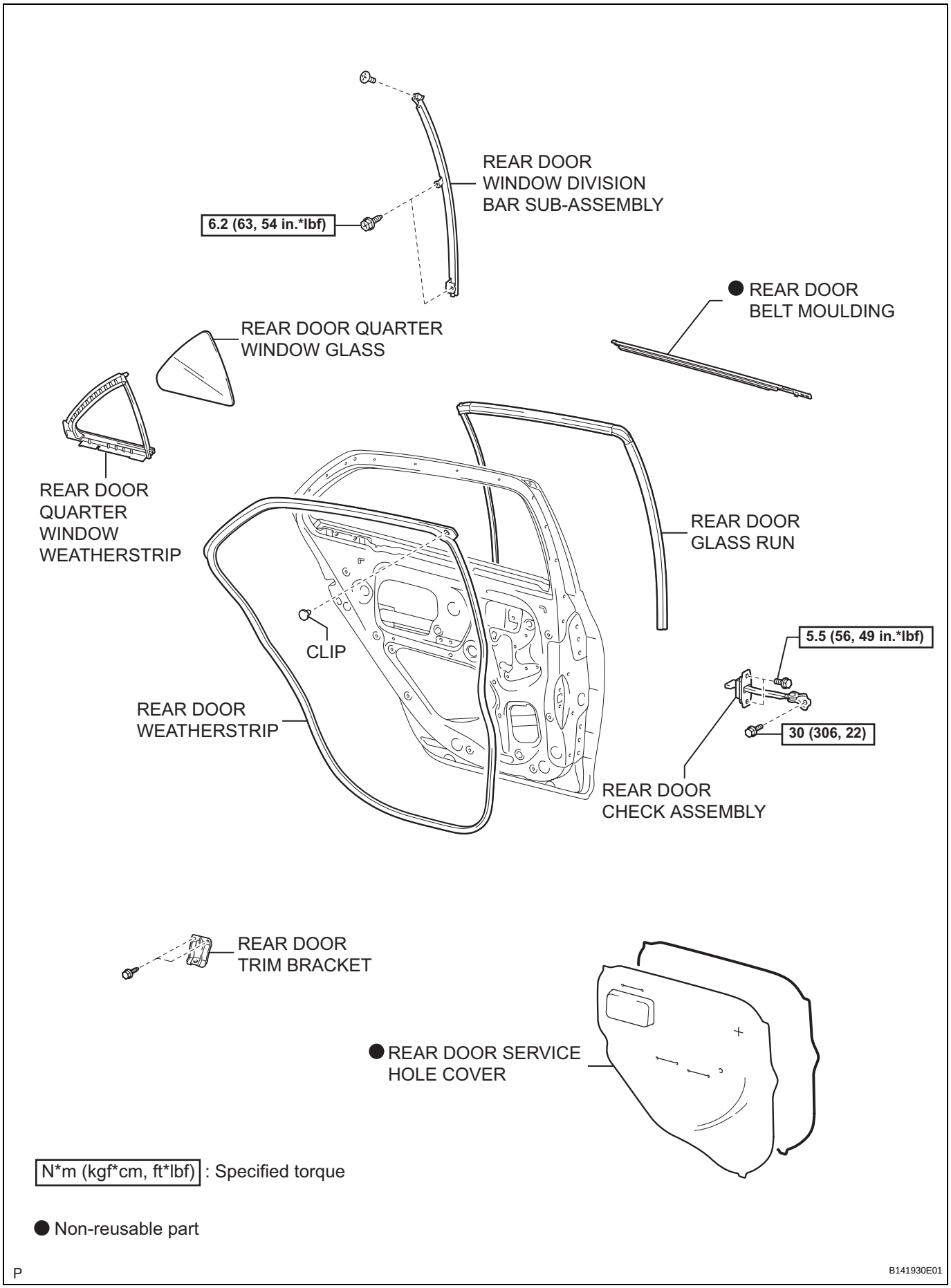
REAR DOOR
WINDOW DIVISION
BAR SUB-ASSEMBLY
6.2 (63, 54 in.*lbf)
● REAR DOOR
BELT MOULDING
REAR DOOR QUARTER
WINDOW GLASS
REAR DOOR
QUARTER
WINDOW
WEATHERSTRIP
REAR DOOR
GLASS RUN
CLIP
5.5 (56, 49 in.*lbf)
REAR DOOR
WEATHERSTRIP
30 (306, 22)
REAR DOOR
CHECK ASSEMBLY
REAR DOOR
TRIM BRACKET
● REAR DOOR SERVICE
HOLE COVER
N*m (kgf*cm, ft*lbf) : Specified torque
● Non-reusable part
P
B141930E01

ED

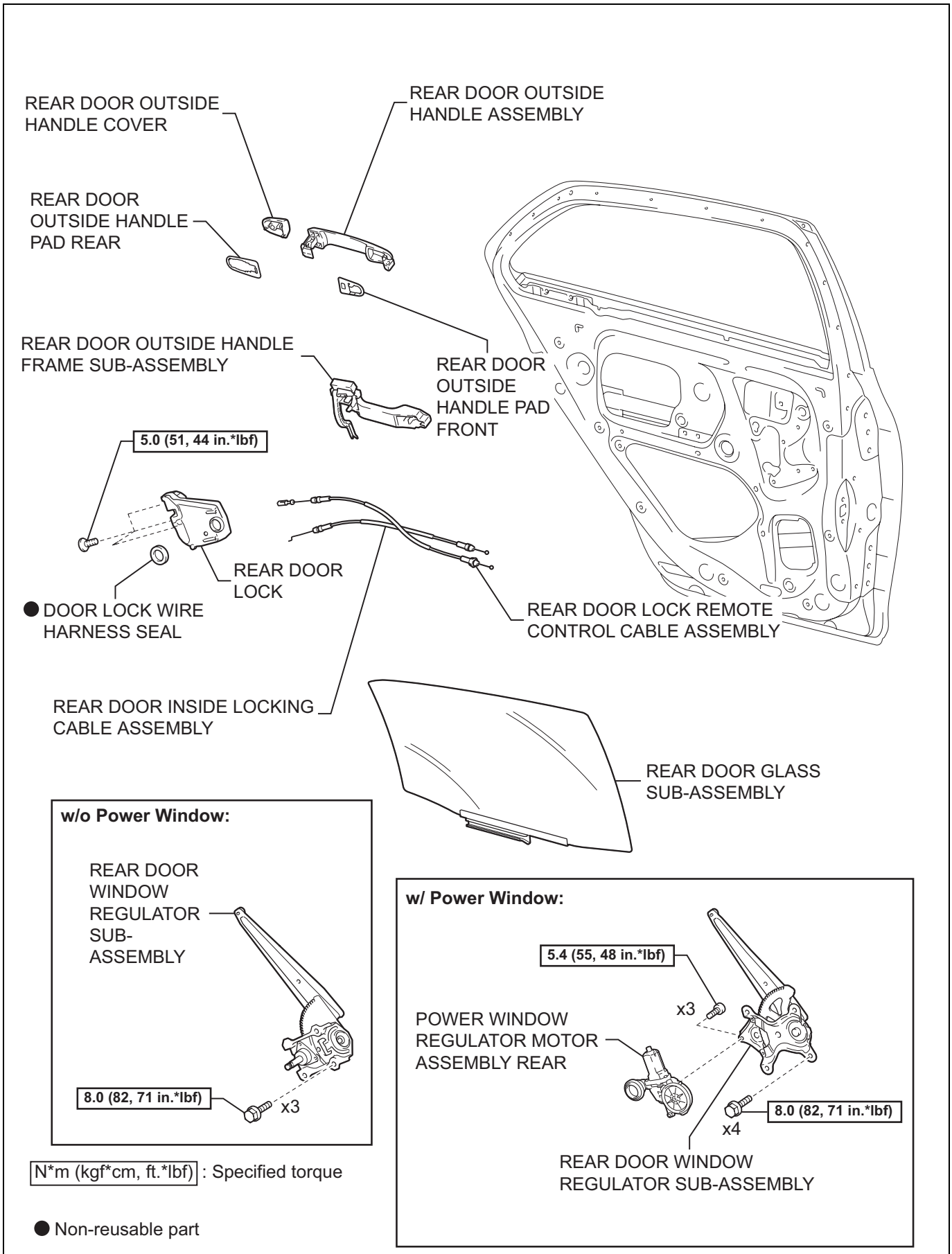
REAR DOOR OUTSIDE HANDLE COVER
REAR DOOR OUTSIDE HANDLE ASSEMBLY
REAR DOOR OUTSIDE HANDLE PAD REAR
REAR DOOR OUTSIDE HANDLE FRAME SUB-ASSEMBLY
REAR DOOR OUTSIDE HANDLE PAD FRONT
5.0 (51, 44 in.*lbf)
REAR DOOR LOCK
● DOOR LOCK WIRE HARNESS SEAL
REAR DOOR LOCK REMOTE CONTROL CABLE ASSEMBLY
REAR DOOR INSIDE LOCKING CABLE ASSEMBLY
REAR DOOR GLASS SUB-ASSEMBLY
w/o Power Window:
REAR DOOR WINDOW REGULATOR SUB-ASSEMBLY
8.0 (82, 71 in.*lbf)
x3
w/ Power Window:
5.4 (55, 48 in.*lbf)
x3
POWER WINDOW REGULATOR MOTOR ASSEMBLY REAR
8.0 (82, 71 in.*lbf)
x4
REAR DOOR WINDOW REGULATOR SUB-ASSEMBLY
N*m (kgf*cm, ft.*lbf) : Specified torque
● Non-reusable part
P
B136240E01

ED

DISASSEMBLY

HINT:
- Use the same procedure for both the RH and LH sides.
- The procedure described below is for the LH side.

1. DISCONNECT CABLE FROM NEGATIVE BATTERY TERMINAL

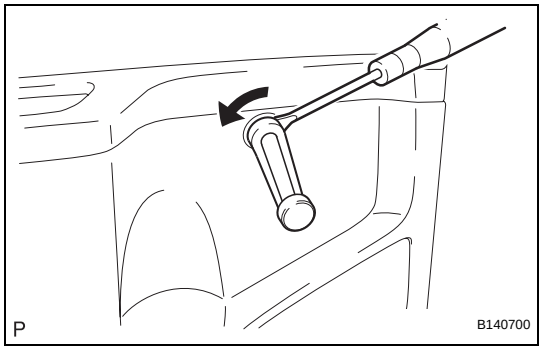

2. REMOVE REAR DOOR WINDOW REGULATOR HANDLE ASSEMBLY (w/o Power Window)
(a) Insert a clip remover between the plate and door trim.
(b) Turn the handle with the clip remover inserted, as shown in the illustration.
(c) Remove the rear door window regulator handle assembly and clip.
(d) Remove the window regulator handle plate.

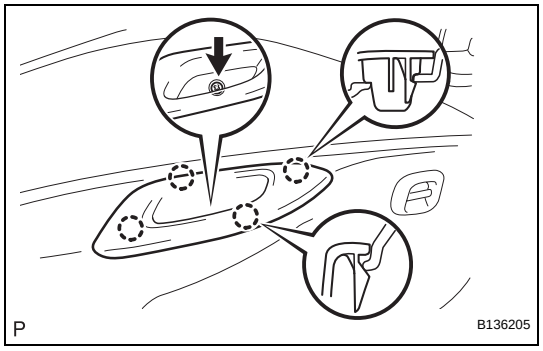

3. REMOVE REAR DOOR ARMREST BASE UPPER PANEL
(a) Disengage the 4 claws and remove the rear door armrest base upper panel.

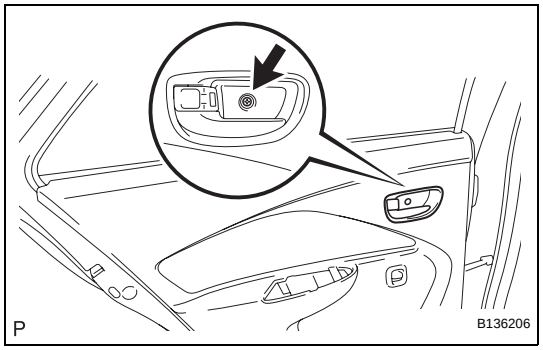

4. REMOVE REAR DOOR TRIM BOARD SUB-ASSEMBLY
(a) Remove the screw.

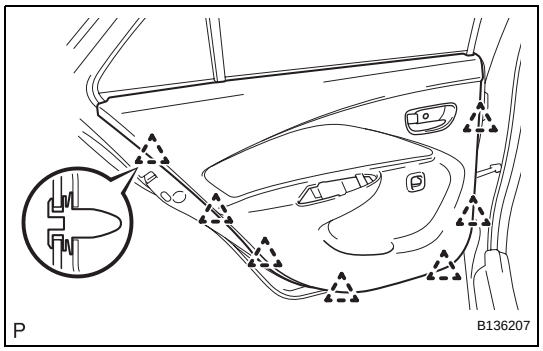

(b) Disengage the 7 clips.
(c) w/ Power window:
Disconnect the connector.

ED

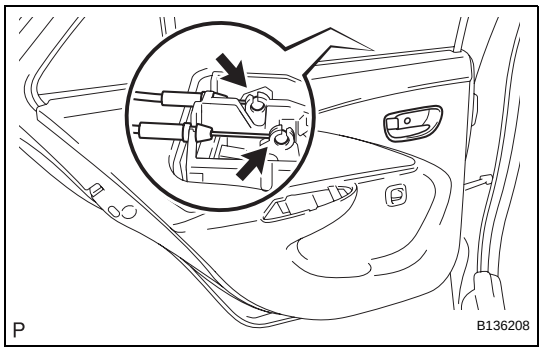

(d) Disconnect the rear door lock remote control cable and rear door inside locking cable and remove the rear door trim board.

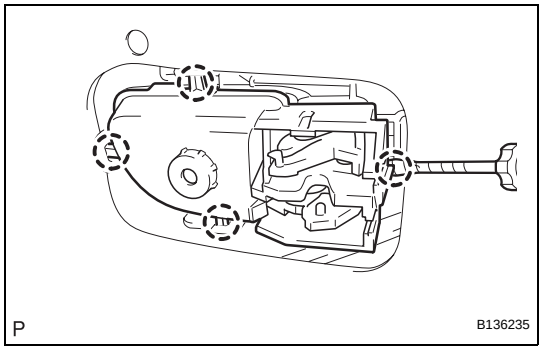

5. REMOVE REAR DOOR INSIDE HANDLE SUB-ASSEMBLY

(a) Using a screwdriver with its tip wrapped in protective tape, disengage the 4 claws and remove the rear door inside handle.

6. REMOVE REAR DOOR GLASS WEATHERSTRIP INNER

(a) Remove the rear door glass weatherstrip inner from the rear door trim board.

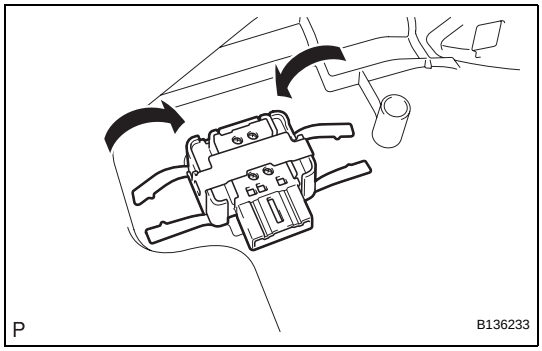

7. REMOVE POWER WINDOW REGULATOR SWITCH ASSEMBLY REAR (w/ Power Window)

(a) Disengage the set plate and remove the power window regulator switch.

ED

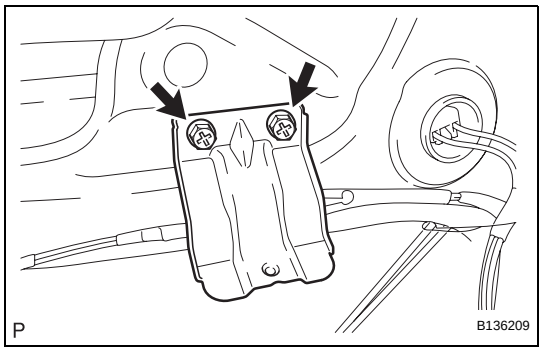

8. REMOVE REAR DOOR TRIM BRACKET

(a) Remove the 2 screws and the rear door trim bracket.

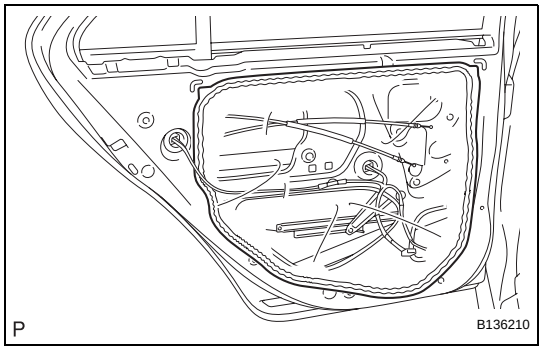

9. REMOVE REAR DOOR SERVICE HOLE COVER

(a) Disconnect the connectors and clamps, then remove the rear door service hole cover.
NOTICE:
Remove any tape remaining on the door side.

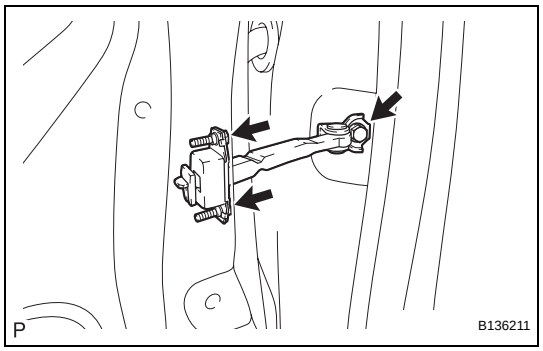

10. REMOVE REAR DOOR CHECK ASSEMBLY

(a) Remove the 3 bolts, then remove the rear door check.

NOTICE:

Do not drop or damage the door check when removing the bolts.

HINT:

Remove the door check through the service hole.

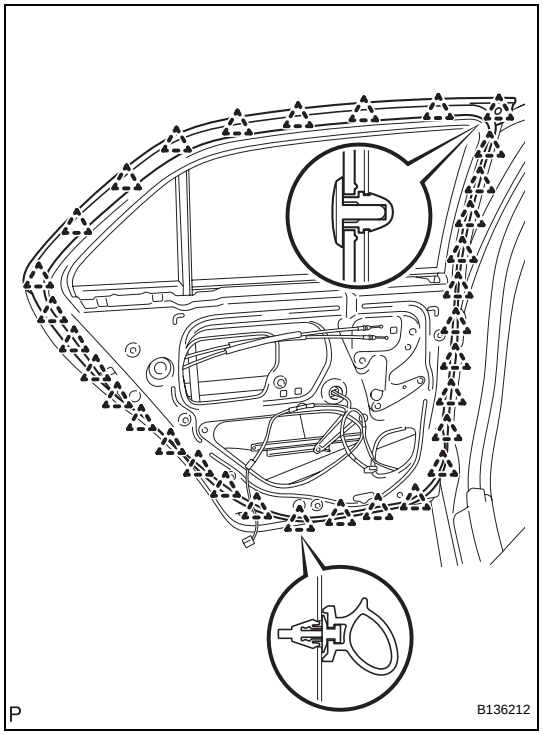

11. REMOVE REAR DOOR WEATHERSTRIP

(a) Disengage the 32 clips and remove the rear door weatherstrip.

NOTICE:

Remove any tape remaining on the door side.

12. REMOVE REAR DOOR BELT MOULDING (See page ET-95)

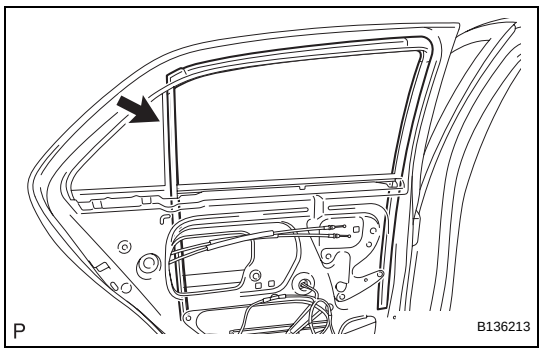

13. REMOVE REAR DOOR GLASS RUN

(a) Remove the rear door glass run.

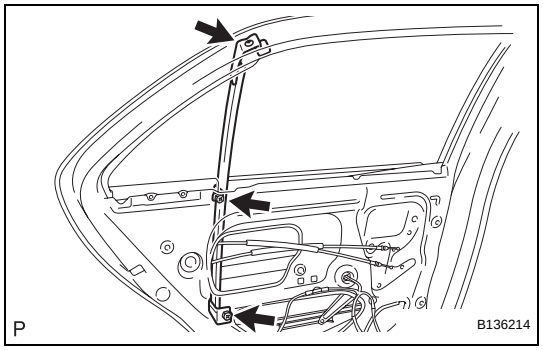

14. REMOVE REAR DOOR WINDOW DIVISION BAR SUB-ASSEMBLY

(a) Remove the 2 bolts, screw and rear door window division bar.

NOTICE:

Do not drop or damage the rear door window division bar when removing the bolts and screw.

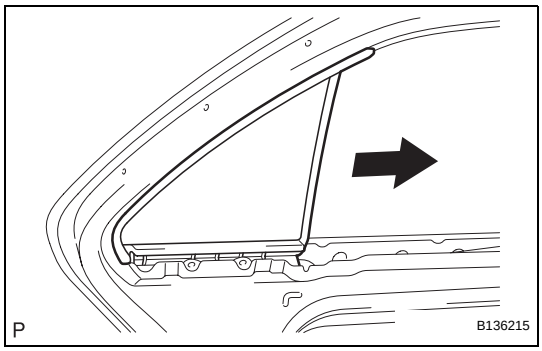

15. REMOVE REAR DOOR QUARTER WINDOW WEATHERSTRIP

(a) Slide the rear door quarter window weatherstrip, in the direction indicated by the arrow in the illustration, to remove it.

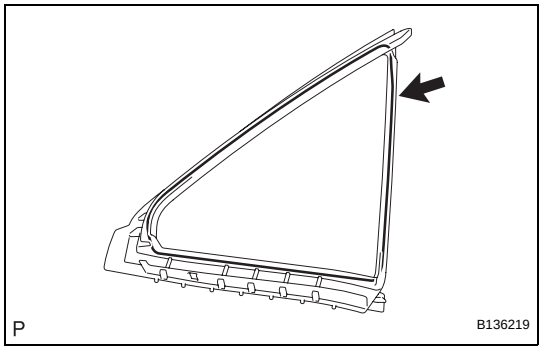

(b) Remove the rear door quarter window glass from the rear door quarter window weatherstrip.

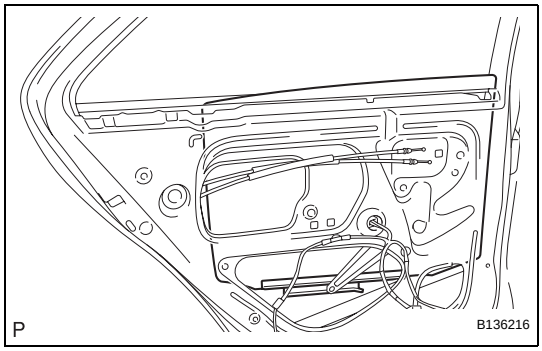

16. REMOVE REAR DOOR GLASS SUB-ASSEMBLY

(a) w/ Power window:
  (1) Remove the rear door glass from the rear door window regulator.

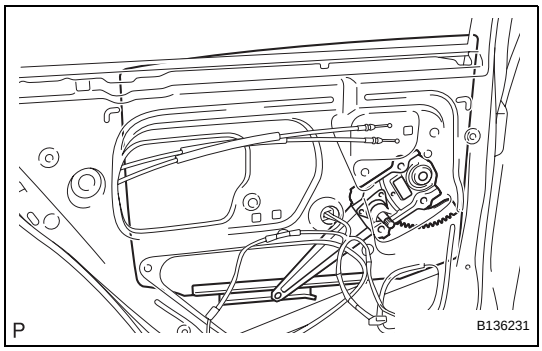

(b) w/o Power window:
  (1) Remove the rear door glass from the rear door window regulator.

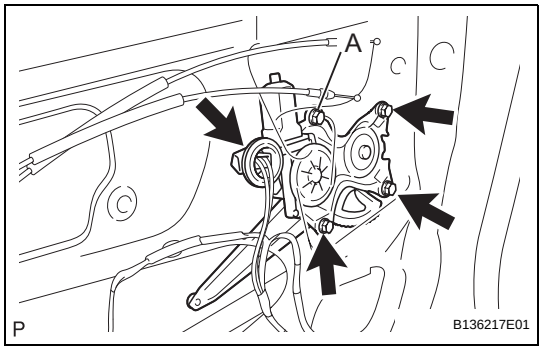

17. REMOVE REAR DOOR WINDOW REGULATOR SUB-ASSEMBLY

(a) w/ Power window:
  (1) Disconnect the connector.
  (2) Loosen bolt A.
  (3) Remove the 3 bolts, then remove the rear door window regulator.
  NOTICE:
  Do not drop or damage the rear door window regulator when removing the bolts.

ED

HINT:
Remove the window regulator through the service hole.

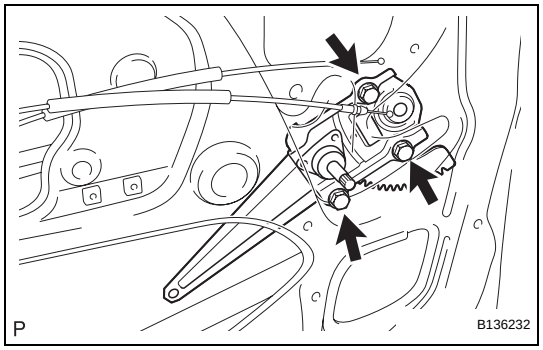

(b) w/o Power window:
(1) Remove the 3 bolts, then remove the rear door window regulator.
NOTICE:
Do not drop or damage the rear door window regulator when removing the bolts.
HINT:
Remove the window regulator through the service hole.

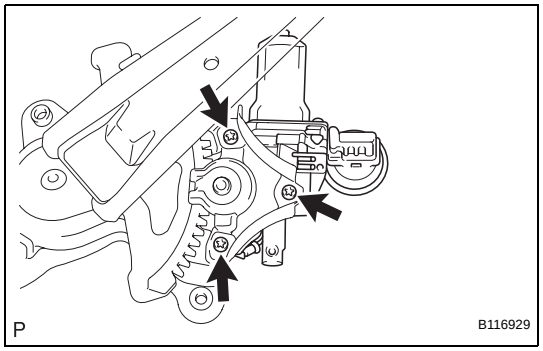

18. REMOVE POWER WINDOW REGULATOR MOTOR ASSEMBLY REAR (w/ Power Window)
(a) Using "Torx" socket wrench T25, remove the 3 screws and power window regulator motor.

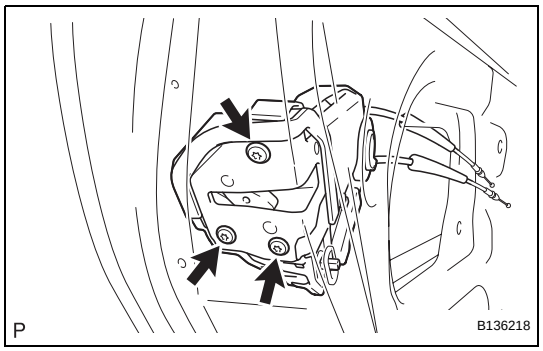

19. REMOVE REAR DOOR LOCK
(a) Using "Torx" socket wrench T30, remove the 3 screws.
(b) Move the rear door lock downward, remove the outside handle frame release plate and remove the rear door lock.
NOTICE:
Do not drop or damage the rear door lock when removing the screws.
HINT:
Remove the rear door lock through the service hole.

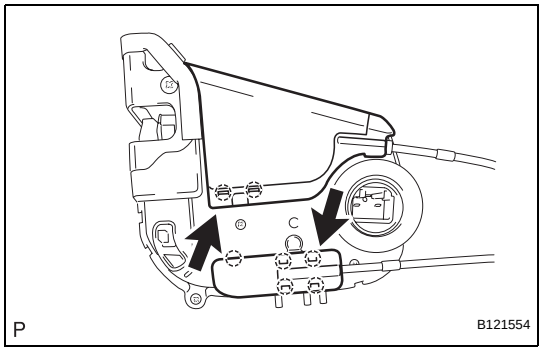

(c) Open the 2 covers.

ED

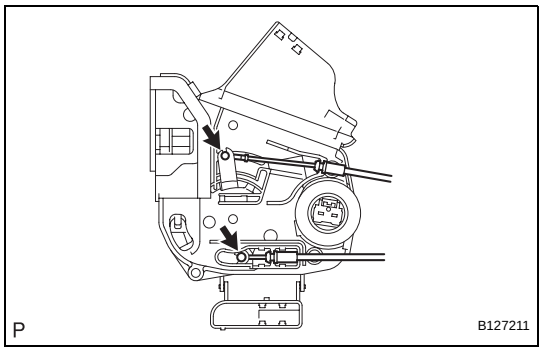

(d) Disconnect the rear door lock remote control cable and rear door inside locking cable.
(e) Remove the door lock wire harness seal.

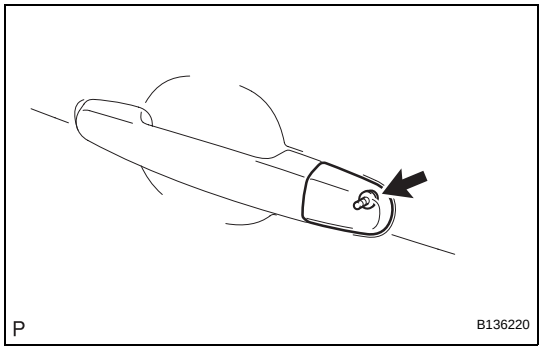

20. REMOVE REAR DOOR OUTSIDE HANDLE COVER
(a) Using "Torx" socket wrench T30, remove the screw and rear door outside handle cover.

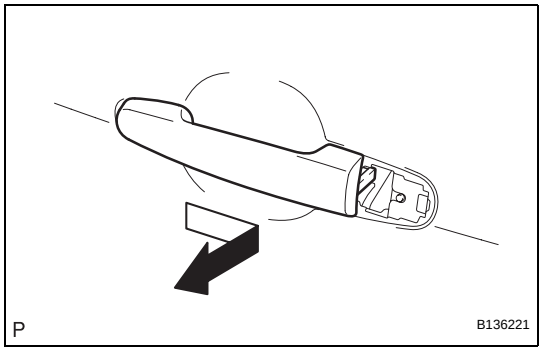

21. REMOVE REAR DOOR OUTSIDE HANDLE ASSEMBLY
(a) Remove the handle by sliding and pulling it in the direction indicated by the arrow mark in the illustration.

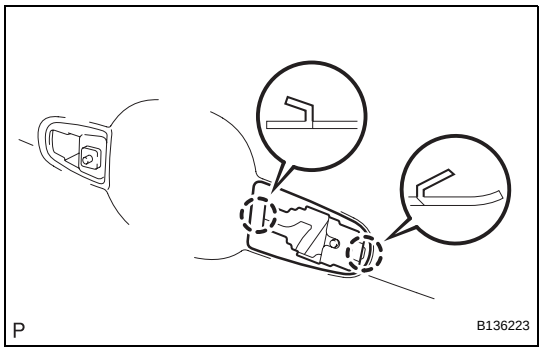

22. REMOVE REAR DOOR OUTSIDE HANDLE PAD REAR
(a) Disengage the 2 claws and remove the rear door outside handle pad rear.

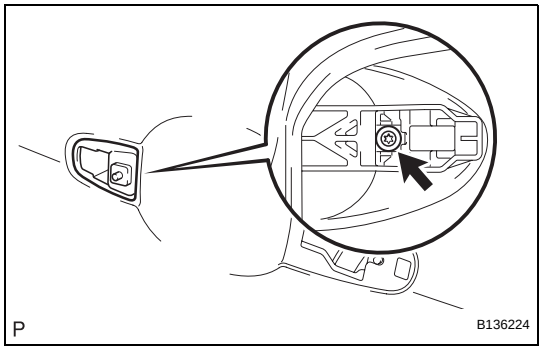

23. REMOVE REAR DOOR OUTSIDE HANDLE PAD FRONT
(a) Using "Torx" socket wrench T30, loosen the screw.

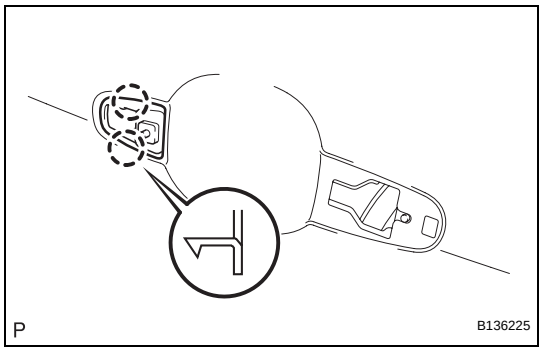

(b) Disengage the 2 claws and remove the rear door outside handle pad front.

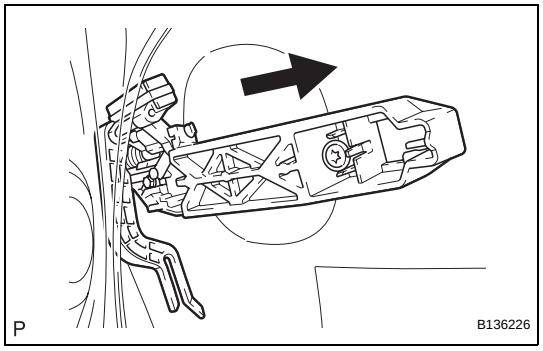

24. REMOVE REAR DOOR OUTSIDE HANDLE FRAME SUB-ASSEMBLY

(a) Slide the outside handle frame to remove it.

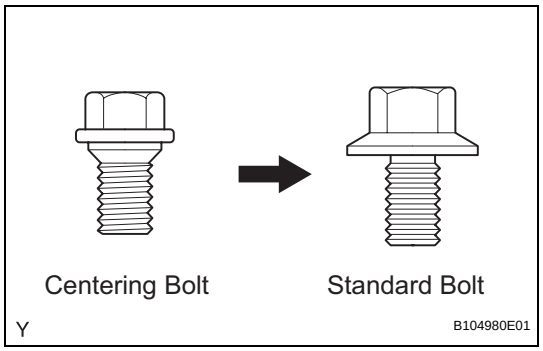

ADJUSTMENT

HINT:

- Before adjusting the door position on vehicles equipped with side airbags and curtain shield airbags, be sure to disconnect the battery. After the adjustment, inspect the SRS warning light, the side airbag system and the curtain shield airbag system for normal operation. Then initialize both airbag systems.
- Use the same procedure for the RH and LH sides.
- The procedures described below are for the LH side.
- Centering bolts are used to mount the door hinge onto the vehicle body and door. The door cannot be adjusted with the centering bolts on. Substitute standard bolts (with washers) for the centering bolts when making adjustments.
- For bolts without torque specifications, check the standard bolt chart (see page SS-2).

1. INSPECT REAR DOOR

(a) Check that the clearance measurements are within the standard ranges.

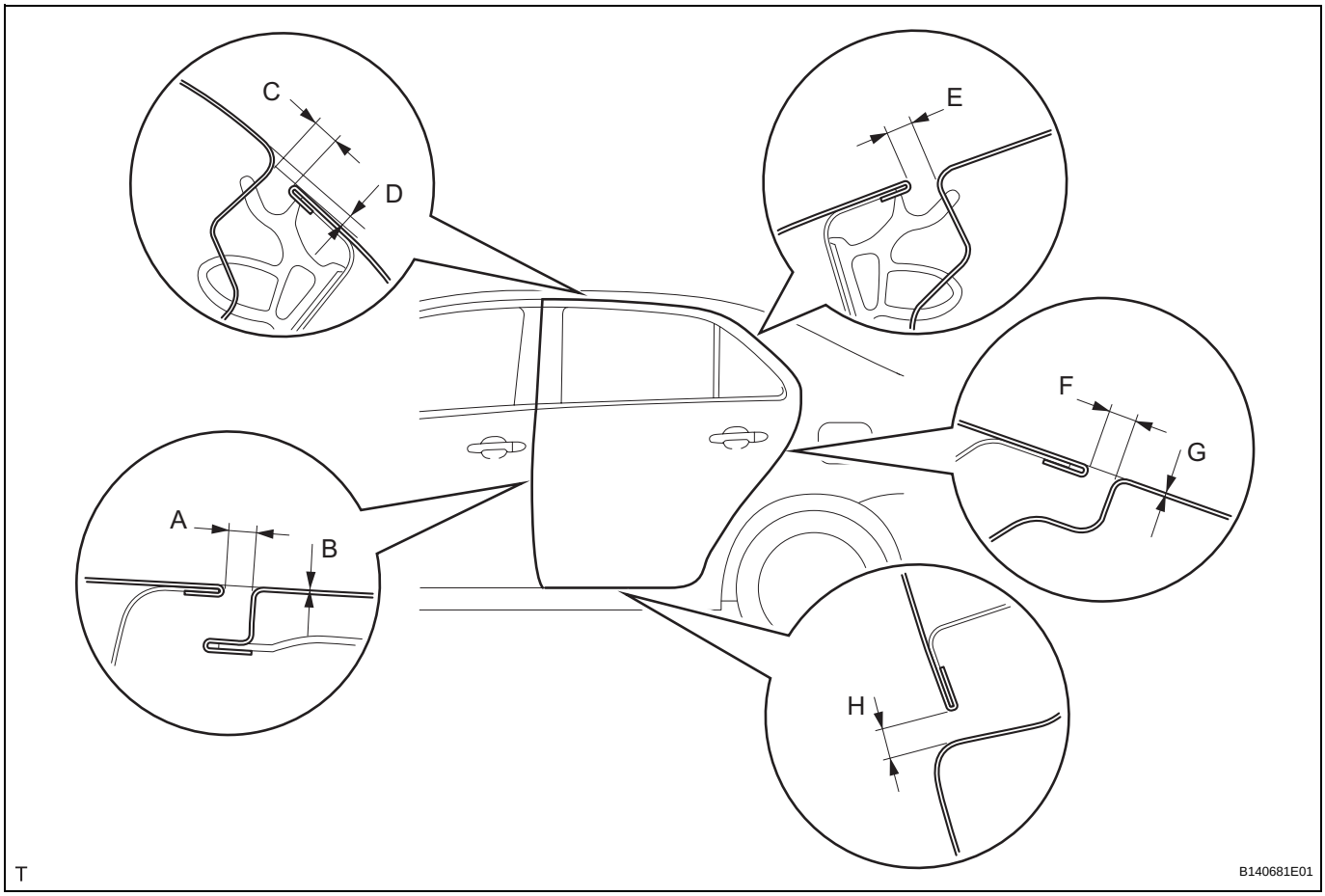

Standard

Area	Measurement	Area	Measurement
A	3.3 to 6.3 mm (0.130 to 0.248 in.)	E	2.5 to 5.5 mm (0.098 to 0.217 in.)
B	-1.5 to 1.5 mm (-0.059 to 0.059 in.)	F	2.5 to 5.5 mm (0.098 to 0.217 in.)
C	3.2 to 6.2 mm (0.126 to 0.244 in.)	G	-1.5 to 1.5 mm (-0.059 to 0.059 in.)
D	1.3 to 4.3 mm (0.051 to 0.169 in.)	H	4.2 to 7.2 mm (0.165 to 0.283 in.)

2. ADJUST REAR DOOR

(a) Disconnect the cable from the negative battery terminal.
Wait for at least 90 seconds after disconnecting the cable to prevent the airbag from working.

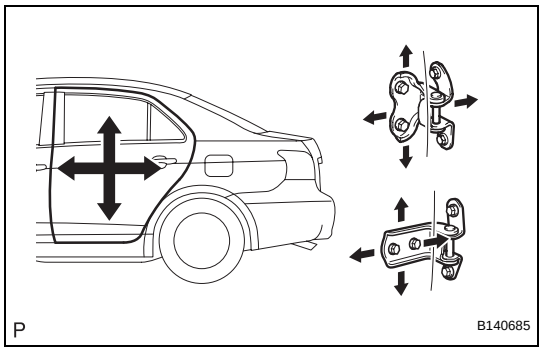

(b) Adjust the door horizontally and vertically by loosening the body side hinge bolts.
(c) Tighten the body side hinge bolts after the adjustment.
Torque: 26 N*m (265 kgf*cm, 19 ft.*lbf)

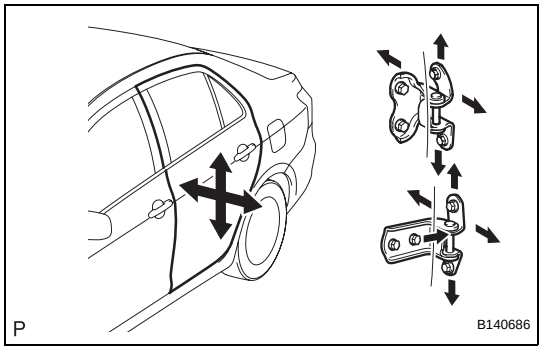

(d) Adjust the door horizontally and vertically by loosening the door side hinge bolts.
(e) Tighten the door side hinge bolts after the adjustment.
Torque: 26 N*m (265 kgf*cm, 19 ft.*lbf)

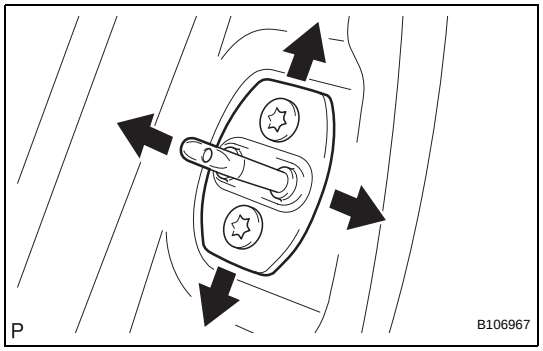

(f) Using "Torx" socket wrench T40, adjust the striker position by slightly loosening the striker mounting screws and hitting the striker with a plastic-faced hammer.
(g) Using "Torx" socket wrench T40, tighten the striker mounting screws after the adjustment.
Torque: 23 N*m (235 kgf*cm, 17 ft.*lbf)
(h) Connect the cable to the negative battery terminal.
Torque: 5.4 N*m (55 kgf*cm, 48 in.*lbf)

REASSEMBLY

1. INSTALL REAR DOOR OUTSIDE HANDLE FRAME SUB-ASSEMBLY

(a) Apply MP grease to the sliding areas of the rear door outside handle frame.

(b) Slide the outside handle frame to install it.

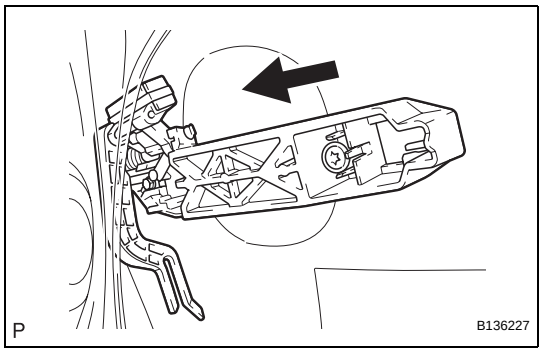

2. INSTALL REAR DOOR OUTSIDE HANDLE PAD FRONT

(a) Engage the 2 claws and install the rear door outside handle pad front.

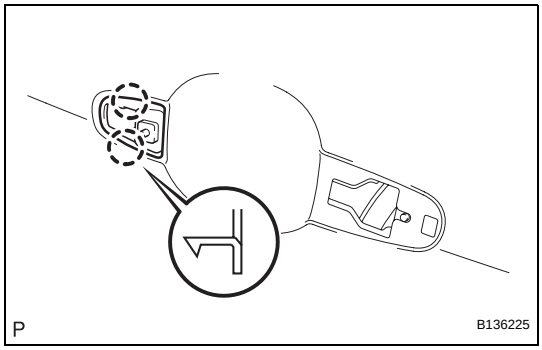

(b) Using "Torx" socket wrench T30, tighten the screw.
Torque: 4.0 N*m (41 kgf*cm, 35 in.*lbf)

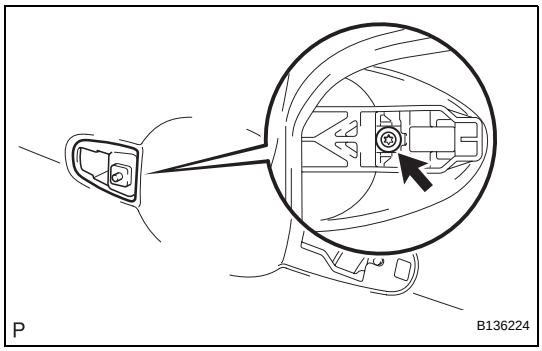

3. INSTALL REAR DOOR OUTSIDE HANDLE PAD REAR

(a) Engage the 2 claws and install the rear door outside handle pad rear.

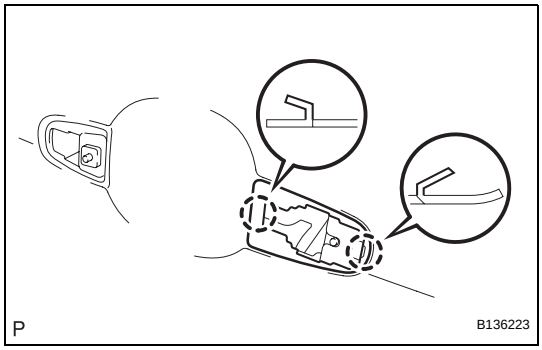

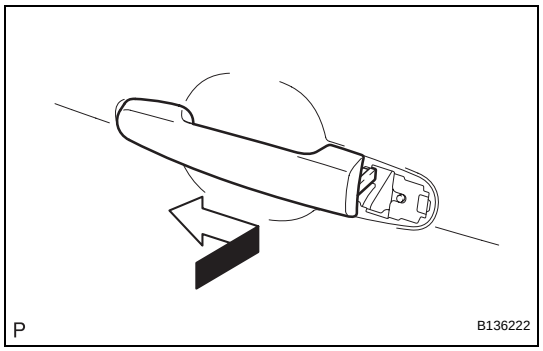

4. INSTALL REAR DOOR OUTSIDE HANDLE ASSEMBLY

(a) Pushing the rear door outside handle in the direction of the arrow mark shown in the illustration, install the rear door outside handle.

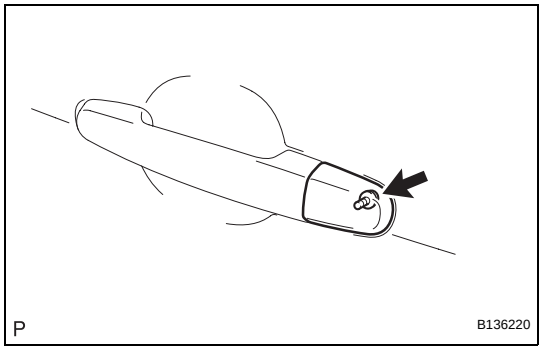

5. INSTALL REAR DOOR OUTSIDE HANDLE COVER

(a) Using "Torx" socket wrench T30, install the rear door outside handle cover with the screw.
Torque: 4.0 N*m (41 kgf*cm, 35 in.*lbf)

6. INSTALL REAR DOOR LOCK

NOTICE:

- **If reusing a door lock that has been removed, replace the packing in the connecting part with new.**
- **Make sure that no grease or dirt adheres to the packing surface in the connecting part.**

(a) Apply MP grease to the sliding and rotating areas of the front door lock.

(b) Connect the rear door lock remote control cable and rear door inside locking cable.

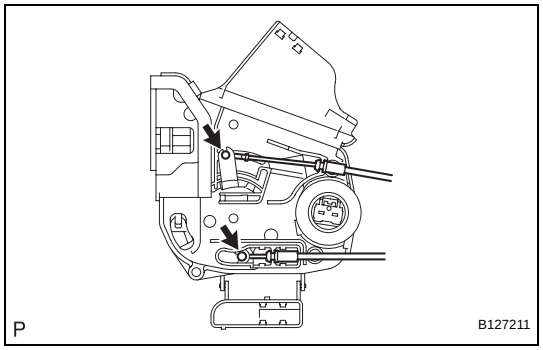

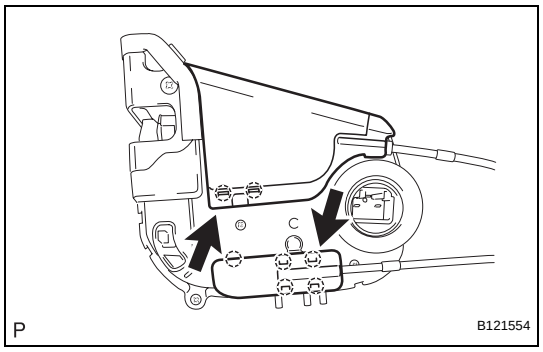

(c) Close the 2 covers.

(d) Insert the door lock into the outside handle frame release plate, then set it onto the door panel.

(e) Make sure that the outside handle frame link is securely engaged with the door lock.

(f) Apply adhesive to the threads of the screws.
Adhesive:
Toyota Genuine Adhesive 1324, Three Bond 1324 or the equivalent.

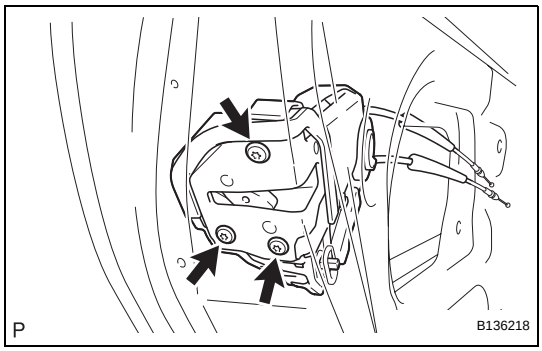

(g) Using "Torx" socket wrench T30, install the rear door lock with the 3 screws.
Torque: 5.0 N*m (51 kgf*cm, 44 in.*lbf)

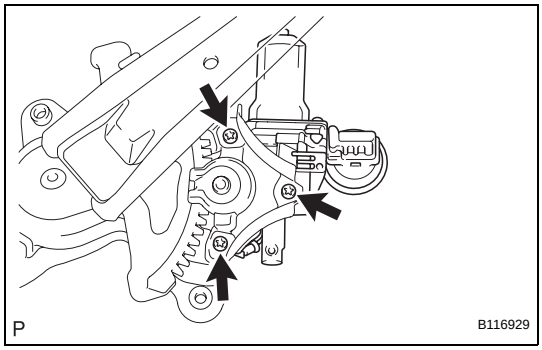

7. INSTALL POWER WINDOW REGULATOR MOTOR ASSEMBLY REAR (w/ Power Window)

(a) Apply MP grease to the sliding and rotating areas of the regulator motor.

(b) Using "Torx" socket wrench T25, install the power window regulator motor with the 3 screws.
Torque: 5.4 N*m (55 kgf*cm, 48 in.*lbf)

8. INSTALL REAR DOOR WINDOW REGULATOR SUB-ASSEMBLY

(a) w/ Power window:

(1) Apply MP grease to the sliding and rotating areas of the rear door window regulator.
NOTICE:
Do not apply grease to the window regulator spring.

(2) Loosely screw bolt A onto the rear door window regulator.

(3) Insert the rear door window regulator into the door panel. Use bolt A to hang the rear door window regulator on the door panel.
NOTICE:
Do not drop the window regulator as it may be damaged.

(4) Install the rear door window regulator with the 4 bolts, and tighten bolt A.
Torque: 8.0 N*m (82 kgf*cm, 71 in.*lbf)

(5) Connect the connector.

(b) w/o Power window:

(1) Apply MP grease to the sliding and rotating areas of the rear door window regulator.
NOTICE:
Do not apply grease to the window regulator spring.

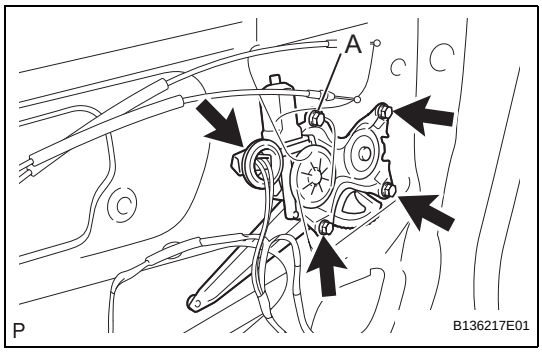

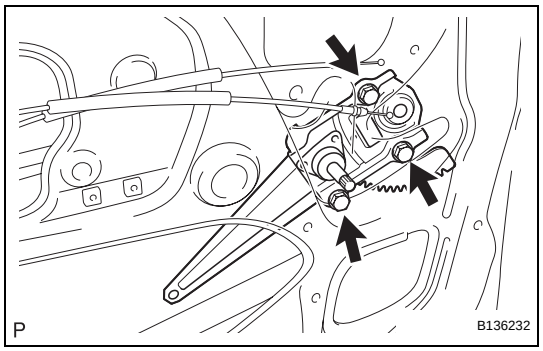

(2) Install the rear door window regulator with the 3 bolts.
Torque: 8.0 N*m (82 kgf*cm, 71 in.*lbf)

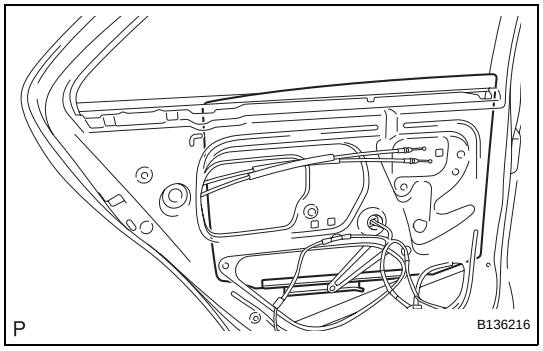

9. INSTALL REAR DOOR GLASS SUB-ASSEMBLY

(a) w/ Power window:

(1) Install the rear door glass onto the rear door window regulator.

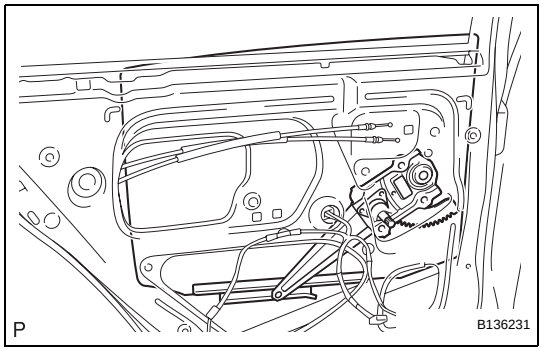

(b) w/o Power window:

(1) Install the rear door glass onto the rear door window regulator.

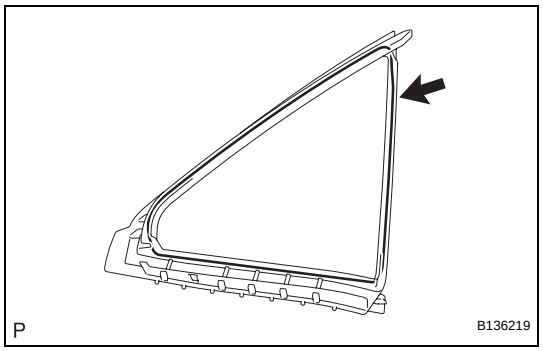

10. INSTALL REAR DOOR QUARTER WINDOW WEATHERSTRIP

(a) Install the rear door quarter window glass onto the rear door quarter window weatherstrip.

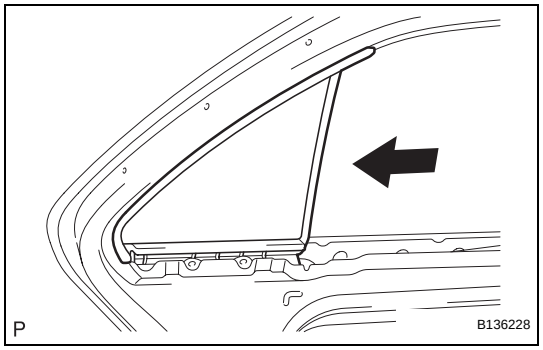

(b) Slide the rear door quarter window weatherstrip, in the direction indicated by the arrow in the illustration, to install it.

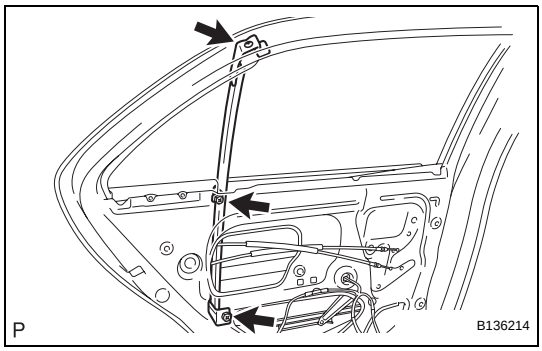

11. INSTALL REAR DOOR WINDOW DIVISION BAR SUB-ASSEMBLY

(a) Install the rear door window division bar with the 2 bolts and screw.
Torque: 6.2 N*m (63 kgf*cm, 54 in.*lbf)

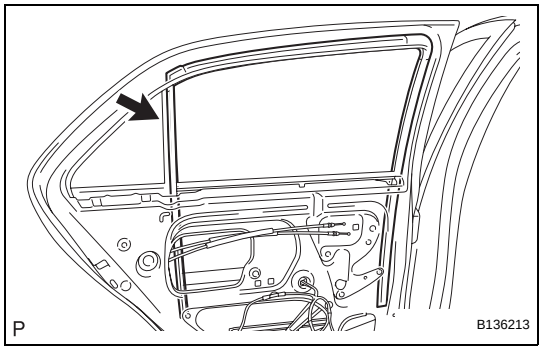

12. INSTALL REAR DOOR GLASS RUN

(a) Install the rear door glass run.

13. INSTALL REAR DOOR BELT MOULDING (See page ET-95)

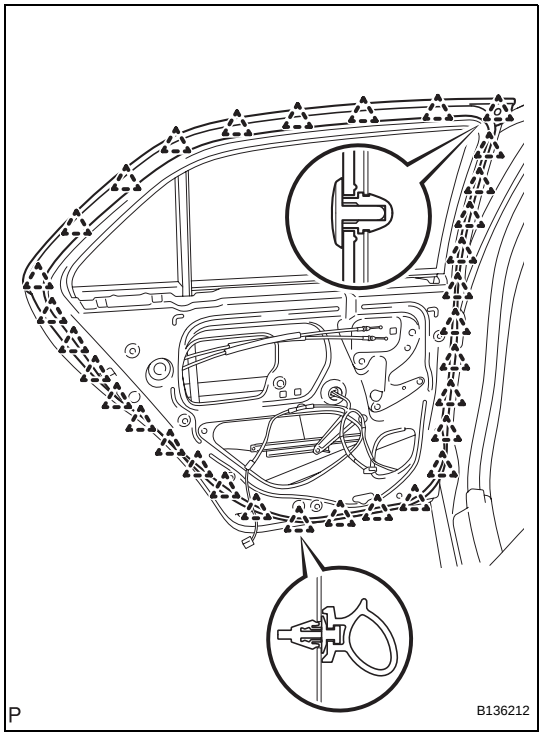

14. INSTALL REAR DOOR WEATHERSTRIP

(a) Engage the 32 clips and install the rear door weatherstrip.

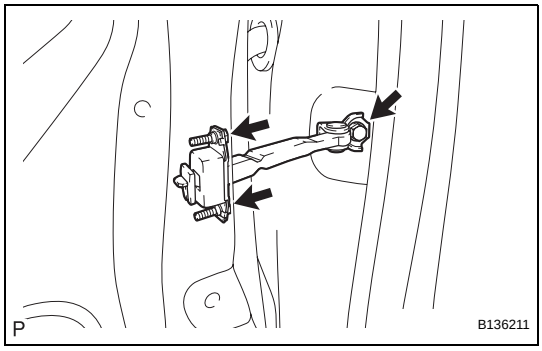

15. INSTALL REAR DOOR CHECK ASSEMBLY

(a) Apply MP grease to the sliding areas of the door check.
(b) Install the rear door check onto the door panel with the 2 bolts.
Torque: 5.5 N*m (56 kgf*cm, 49 in.*lbf)
(c) Apply adhesive to the threads of the bolt.
Adhesive:
Toyota Genuine Adhesive 1324, Three Bond 1324 or the equivalent.

(d) Install the rear door check onto the body panel with the bolt.
Torque: 30 N*m (306 kgf*cm, 22 ft.*lbf)

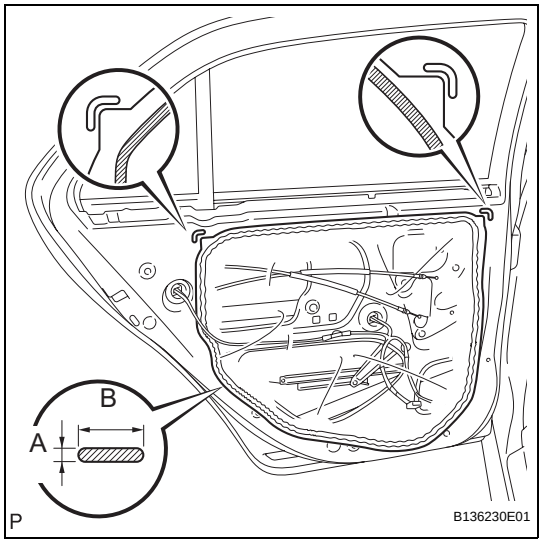

16. INSTALL REAR DOOR SERVICE HOLE COVER

(a) Apply butyl tape to the door panel, then install the rear door service hole cover as shown in the illustration.
Adhesive:
Part No. 08850-00065, Butyl Tape Set or the equivalent
Specification

Area	Dimension
A	2.0 mm (0.079 in,) or more
B	6.0 mm (0.236 in.) or more

HINT:
- When installing the service hole cover, pull the links and connectors out through the service hole.
- There should be no wrinkles or folds after attaching the service hole cover.
- After attaching the service hole cover, check the quality of the seal.

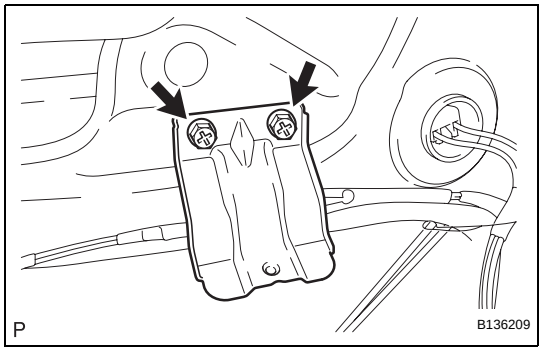

17. INSTALL REAR DOOR TRIM BRACKET

(a) Install the rear door trim bracket with the 2 screws.

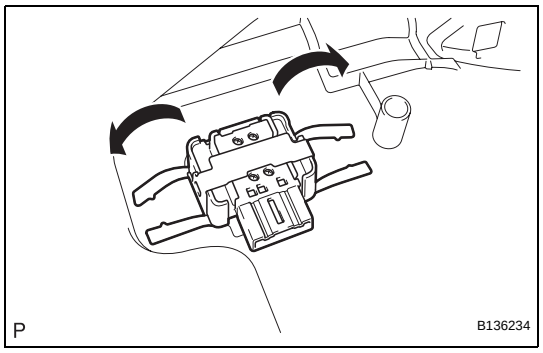

18. INSTALL POWER WINDOW REGULATOR SWITCH ASSEMBLY REAR (w/ Power Window)

(a) Engage the set plate and install the power window regulator switch.

19. INSTALL REAR DOOR GLASS WEATHERSTRIP INNER

(a) Install the rear door glass weatherstrip inner onto the rear door trim board.

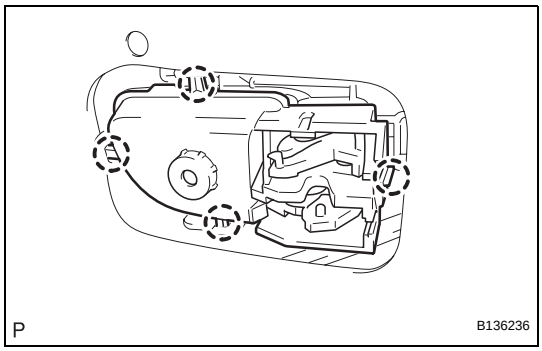

20. INSTALL REAR DOOR INSIDE HANDLE SUB-ASSEMBLY

(a) Engage the 4 claws and install the rear door inside handle.

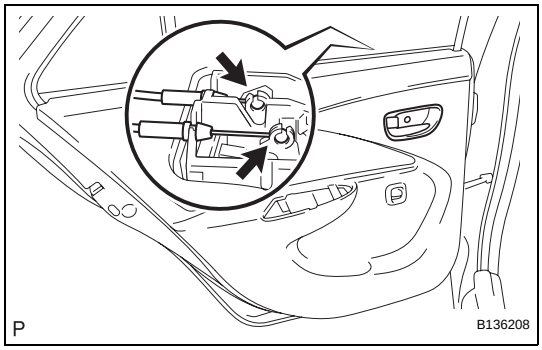

21. INSTALL REAR DOOR TRIM BOARD SUB-ASSEMBLY

(a) Connect the rear door lock remote control cable and rear door inside locking cable.

(b) w/ Power window:
Connect the connector.

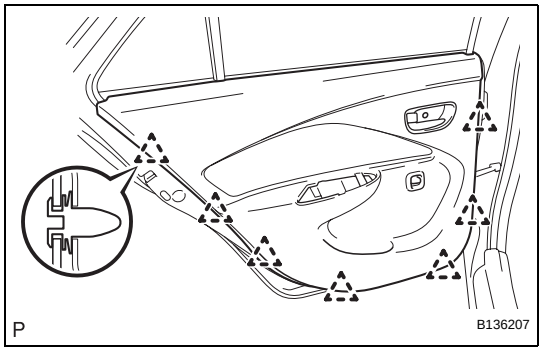

(c) Engage the 7 clips and install the rear door trim board.

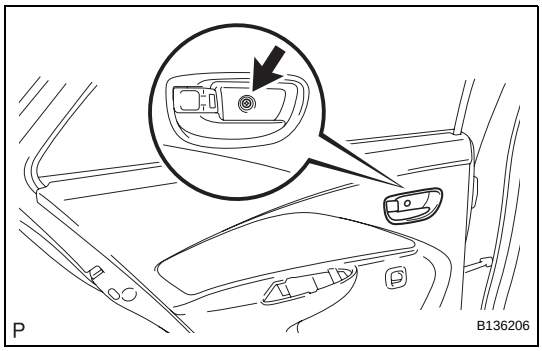

(d) Tighten the screw.

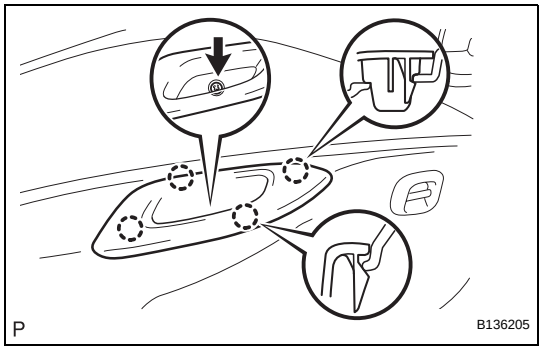

22. INSTALL REAR DOOR ARMREST BASE UPPER PANEL

(a) Engage the 4 claws and install the rear door armrest base upper panel.

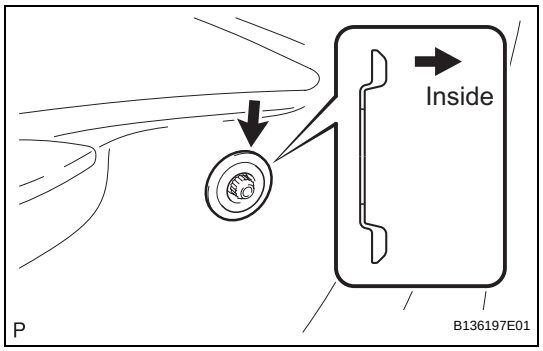

23. INSTALL REAR DOOR WINDOW REGULATOR HANDLE ASSEMBLY (w/o Power Window)

(a) Install the window regulator handle plate.

(b) Open all the windows.

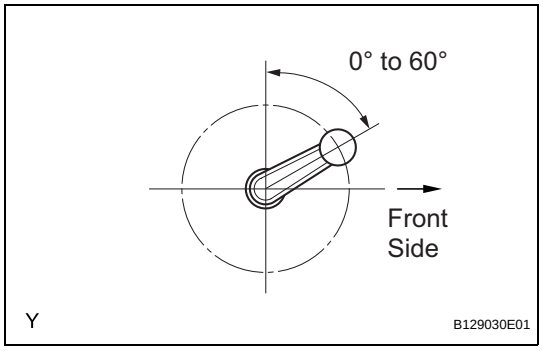

(c) Install the rear door window regulator handle with the clip at the angle shown in the illustration.

24. CONNECT CABLE TO NEGATIVE BATTERY TERMINAL
Torque: 5.4 N*m (55 kgf*cm, 48 in.*lbf)

REAR DOOR (for Hatchback with Power Window)

COMPONENTS

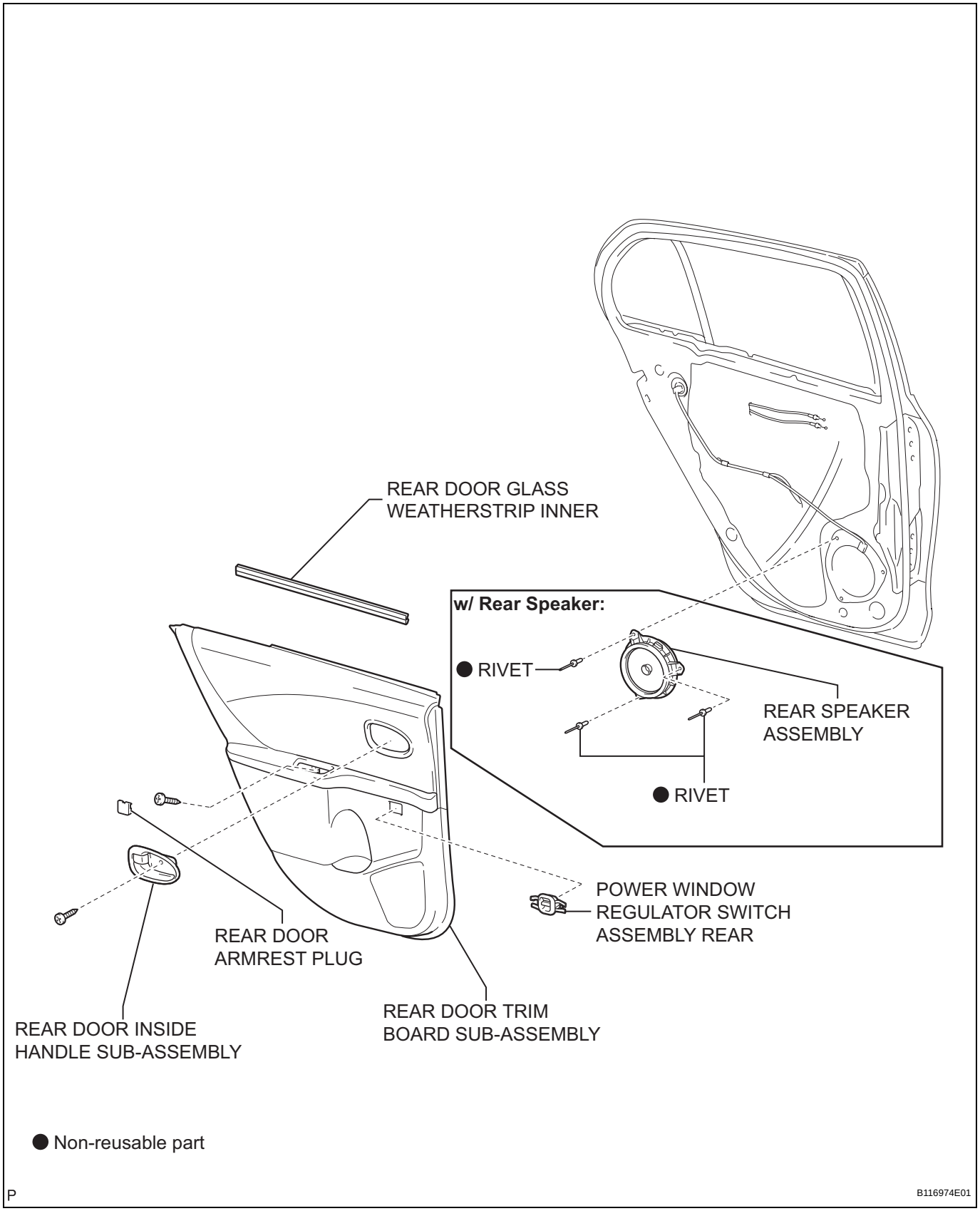

ED

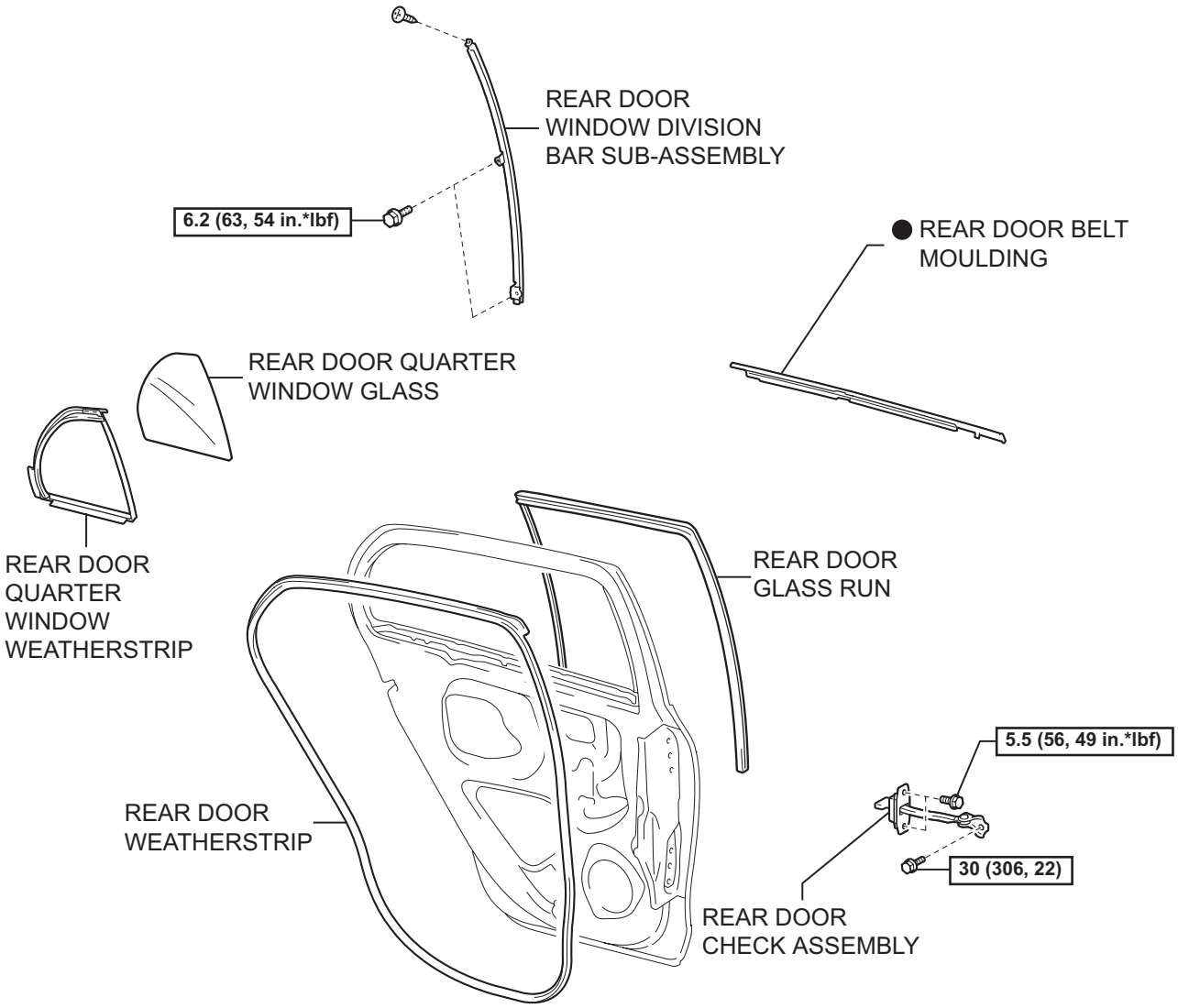

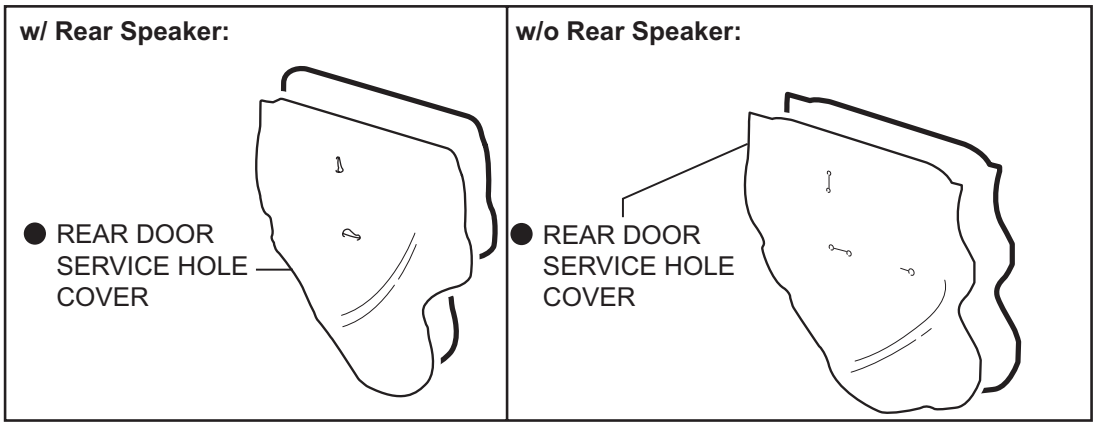

N*m (kgf*cm, ft*lbf) : Specified torque

● Non-reusable part

P

B116975E01

ED

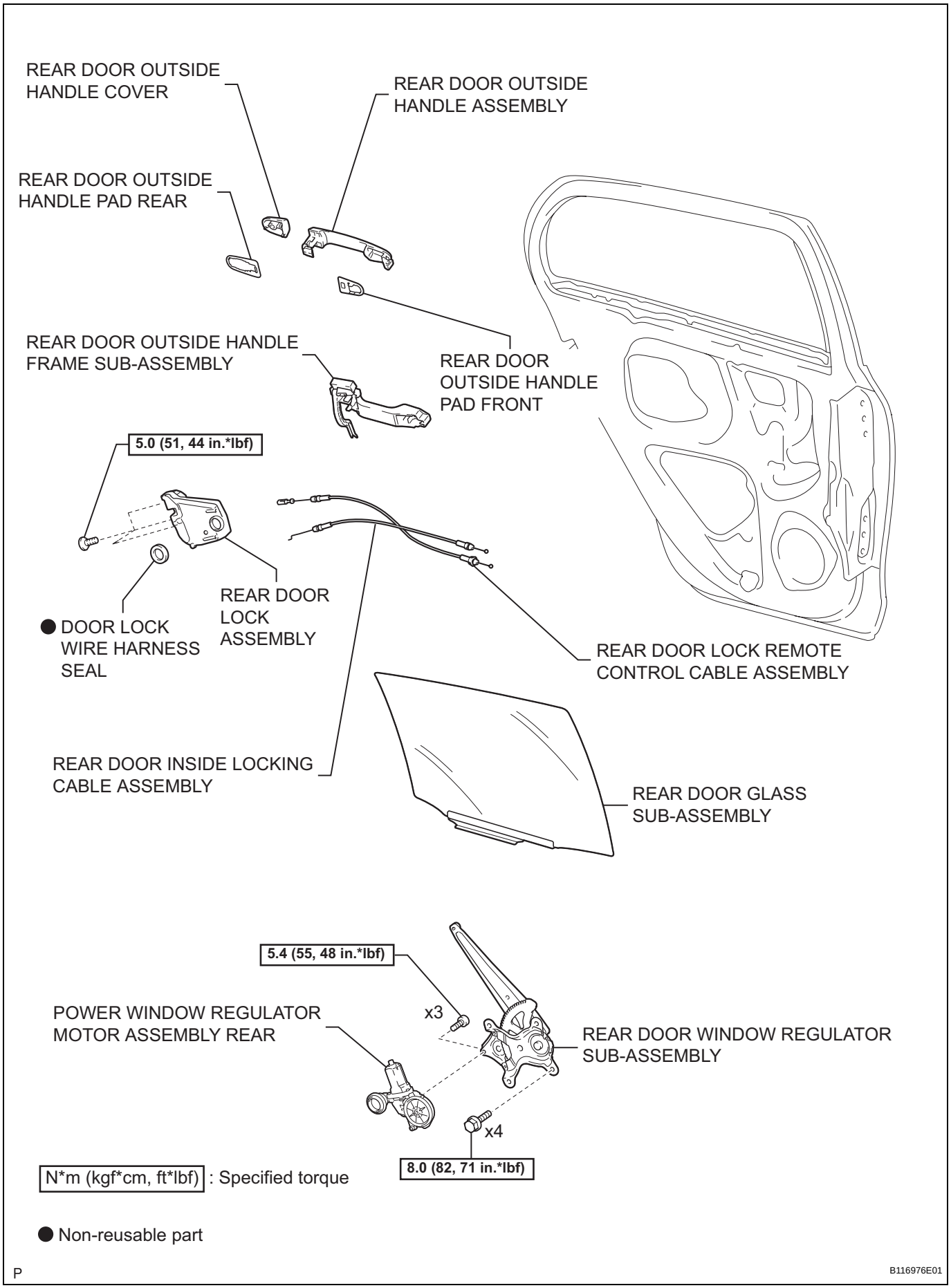
REAR DOOR OUTSIDE HANDLE COVER
REAR DOOR OUTSIDE HANDLE ASSEMBLY
REAR DOOR OUTSIDE HANDLE PAD REAR
REAR DOOR OUTSIDE HANDLE FRAME SUB-ASSEMBLY
REAR DOOR OUTSIDE HANDLE PAD FRONT
5.0 (51, 44 in.*lbf)
REAR DOOR LOCK ASSEMBLY
● DOOR LOCK WIRE HARNESS SEAL
REAR DOOR LOCK REMOTE CONTROL CABLE ASSEMBLY
REAR DOOR INSIDE LOCKING CABLE ASSEMBLY
REAR DOOR GLASS SUB-ASSEMBLY
5.4 (55, 48 in.*lbf)
x3
POWER WINDOW REGULATOR MOTOR ASSEMBLY REAR
REAR DOOR WINDOW REGULATOR SUB-ASSEMBLY
x4
8.0 (82, 71 in.*lbf)
N*m (kgf*cm, ft*lbf) : Specified torque
● Non-reusable part
P
B116976E01

ED

DISASSEMBLY

HINT:
- Use the same procedure for both the RH and LH side.
- The procedure described below is for the LH side.

1. DISCONNECT CABLE FROM NEGATIVE BATTERY TERMINAL

2. REMOVE REAR DOOR TRIM BOARD SUB-ASSEMBLY

(a) Using a screwdriver with its tip wrapped in protective tape, disengage the 3 claws and remove the rear door armrest plug.

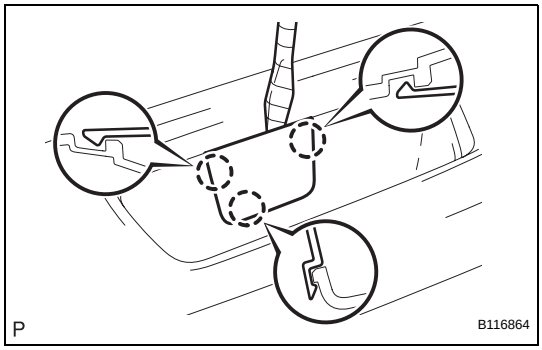

(b) Remove the 2 screws.

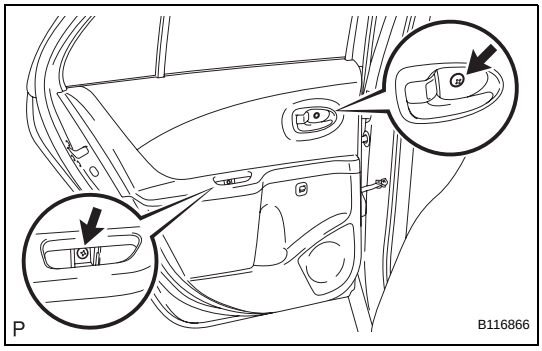

(c) Disengage the 7 clips.
(d) Disconnect the connector.

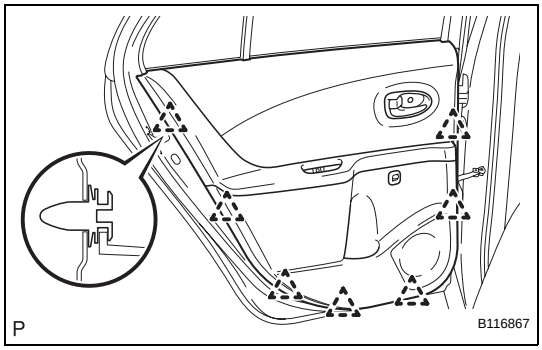

(e) Disconnect the rear door lock remote control cable and rear door inside locking cable and remove the rear door trim board.

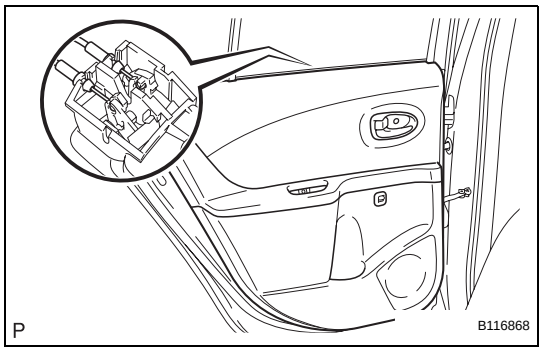

ED

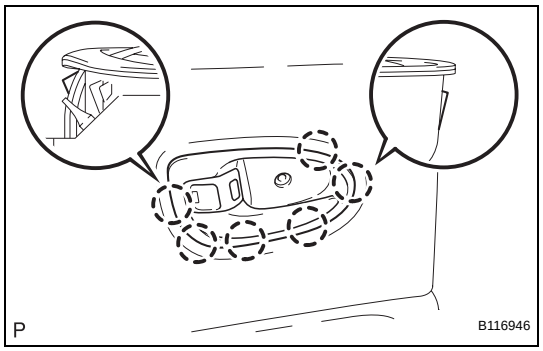

3. REMOVE REAR DOOR INSIDE HANDLE SUB-ASSEMBLY

(a) Disengage the 6 claws and remove the rear door inside handle.

4. REMOVE REAR DOOR GLASS WEATHERSTRIP INNER

(a) Remove the rear door glass weatherstrip inner from the rear door trim board.

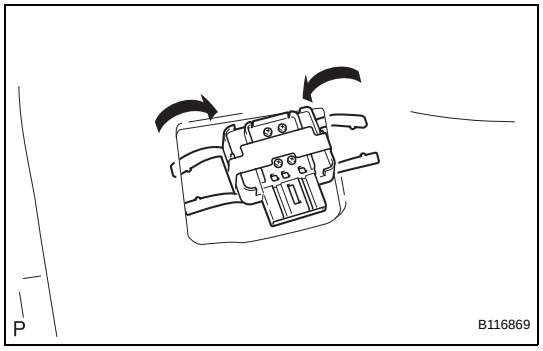

5. REMOVE POWER WINDOW REGULATOR SWITCH ASSEMBLY REAR

(a) Disengage the set plate and remove the power window regulator switch.

6. REMOVE REAR SPEAKER ASSEMBLY (w/ Rear Speaker) (See page AV-178)

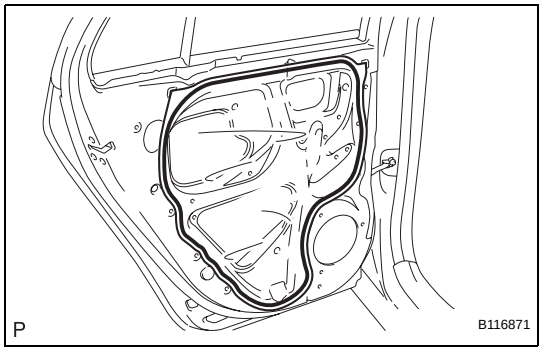

7. REMOVE REAR DOOR SERVICE HOLE COVER

(a) w/ Rear speaker:
Disconnect the connectors and clamps, then remove the rear door service hole cover.
NOTICE:
Remove any tape remaining on the door side.

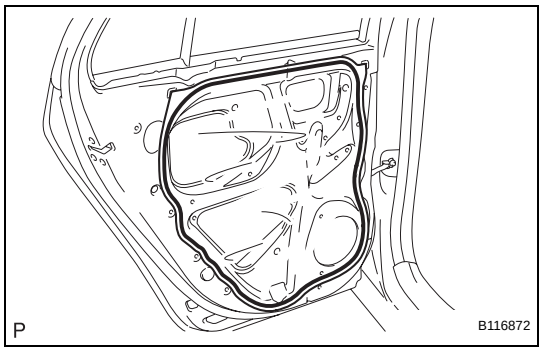

(b) w/o Rear speaker:
Disconnect the connectors and clamps, then remove the rear door service hole cover.
NOTICE:
Remove any tape remaining on the door side.

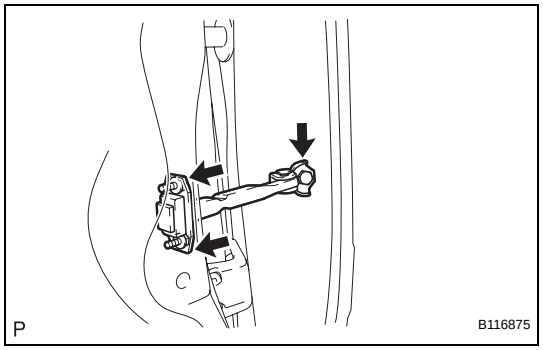

8. REMOVE REAR DOOR CHECK ASSEMBLY

(a) Remove the 3 bolts, then remove the rear door check.
NOTICE:
Do not drop or damage the door check when removing bolts.
HINT:
Remove the door check through the service hole.

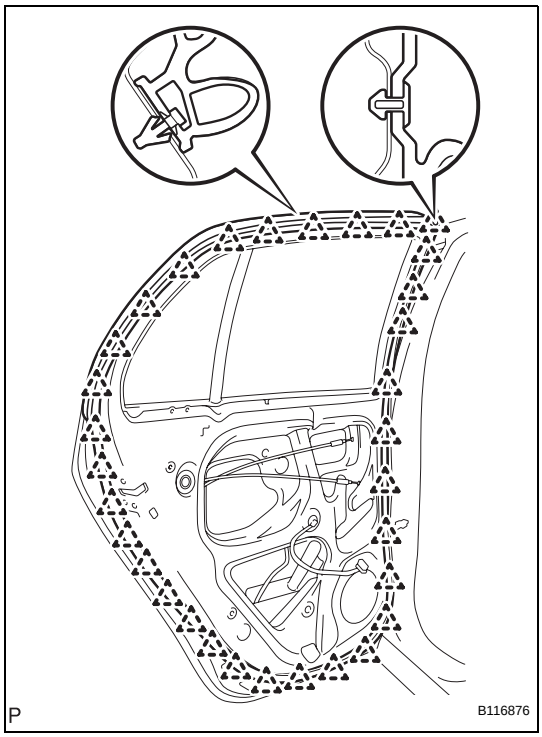

9. REMOVE REAR DOOR WEATHERSTRIP

(a) Disengage the 32 clips and remove the rear door weatherstrip.

NOTICE:

Remove any tape remaining on the door side.

10. REMOVE REAR DOOR BELT MOULDING (See page ET-97)

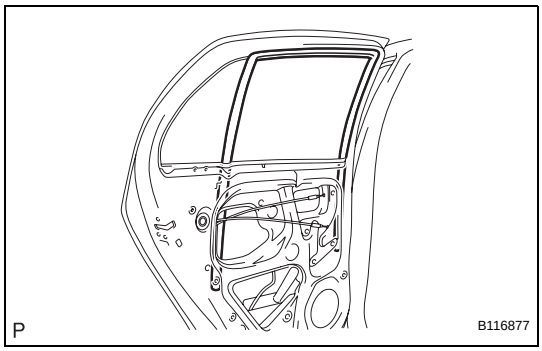

11. REMOVE REAR DOOR GLASS RUN

(a) Remove the rear door glass run.

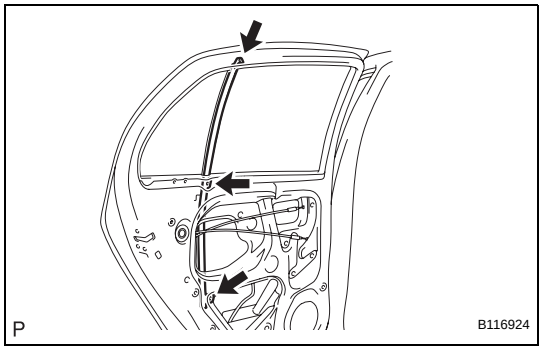

12. REMOVE REAR DOOR WINDOW DIVISION BAR SUB-ASSEMBLY

(a) Remove the 2 bolts and screw and rear door window division bar.

NOTICE:

Do not drop or damage the rear door window division bar when removing the bolts and screw.

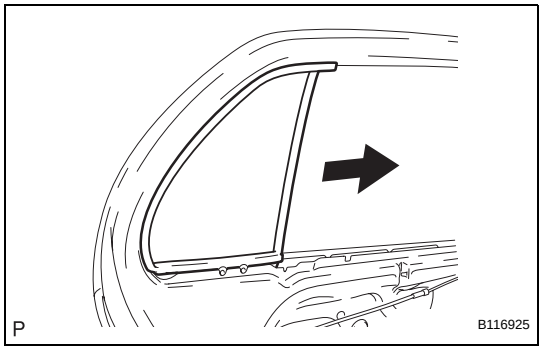

13. REMOVE REAR DOOR QUARTER WINDOW WEATHERSTRIP

(a) Slide the rear door quarter window weatherstrip, in the direction indicated by the arrow in the illustration, to remove it.

(b) Remove the rear door quarter window glass from the rear door quarter window weatherstrip.

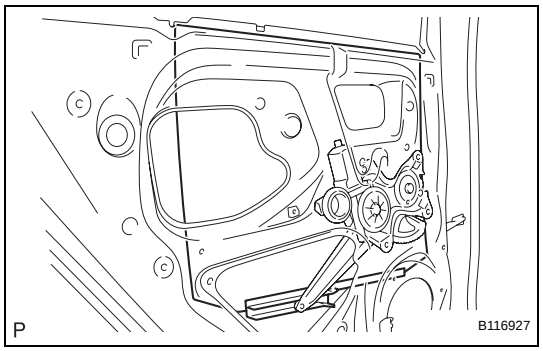

14. REMOVE REAR DOOR GLASS SUB-ASSEMBLY

(a) Remove the rear door glass from the rear door window regulator.

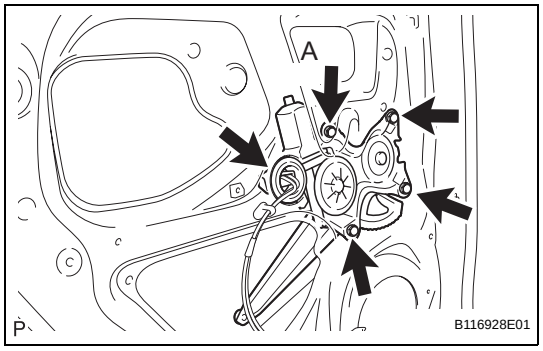

15. REMOVE REAR DOOR WINDOW REGULATOR SUB-ASSEMBLY

(a) Disconnect the connector.

(b) Loosen bolt A.

(c) Remove the 3 bolts, then remove the rear door window regulator.

NOTICE:

Do not drop or damage the window regulator when removing the bolts.

HINT:

Remove the window regulator through the service hole.

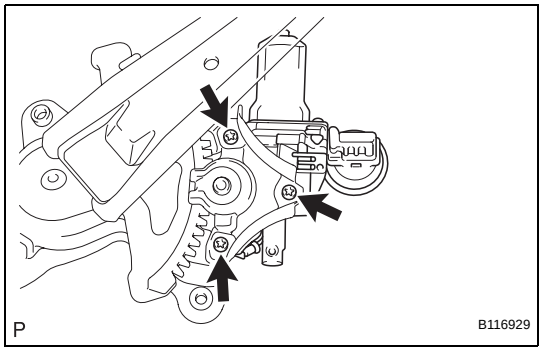

16. REMOVE POWER WINDOW REGULATOR MOTOR ASSEMBLY REAR

(a) Using "Torx" socket wrench T25, remove the 3 screws and power window regulator motor.

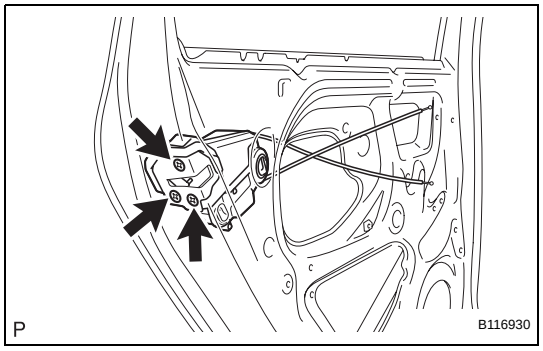

17. REMOVE REAR DOOR LOCK ASSEMBLY

(a) Using "Torx" socket wrench T30, remove the 3 screws.

(b) Move the rear door lock downward, remove the outside handle frame release plate and remove the rear door lock.

NOTICE:

Do not drop or damage the door lock when removing the screws.

HINT:

Remove the rear door lock through the service hole.

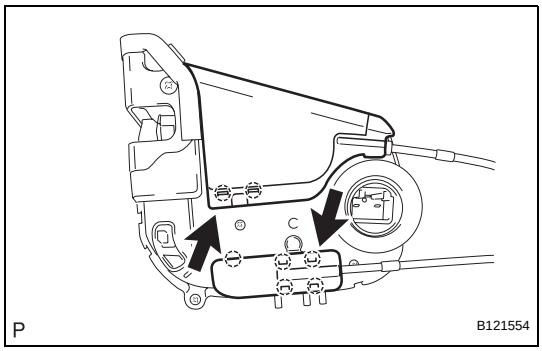

(c) Disengage the 7 claws and open the 2 covers.

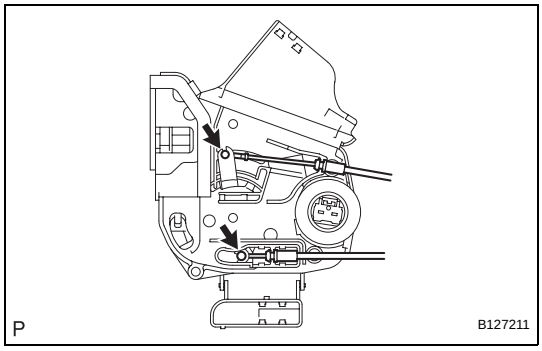

(d) Disconnect the rear door lock remote control cable and rear door inside locking cable.
(e) Remove the door lock wire harness seal.

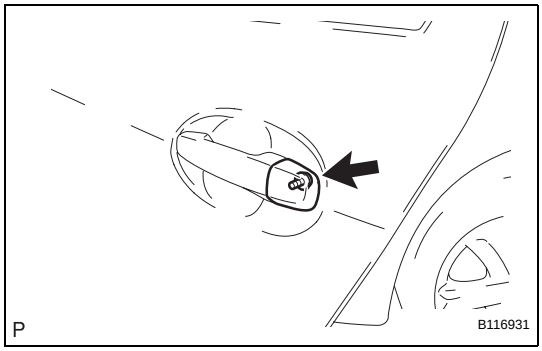

18. REMOVE REAR DOOR OUTSIDE HANDLE COVER

(a) Using "Torx" socket wrench T30, remove the screw and rear door outside handle cover.

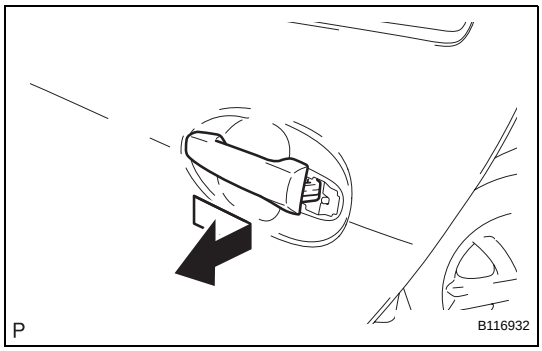

19. REMOVE REAR DOOR OUTSIDE HANDLE ASSEMBLY

(a) Remove the handle by sliding and pulling it in the direction indicated by the arrow mark in the illustration.

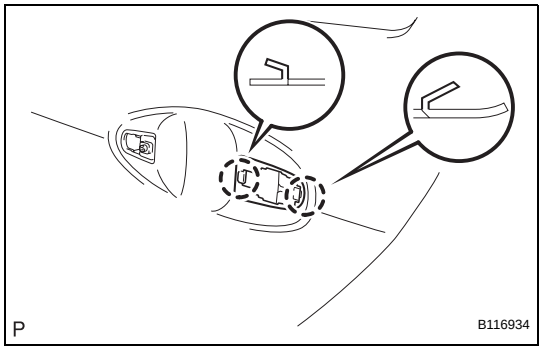

20. REMOVE REAR DOOR OUTSIDE HANDLE PAD REAR

(a) Disengage the 2 claws and remove the rear door outside handle pad rear.

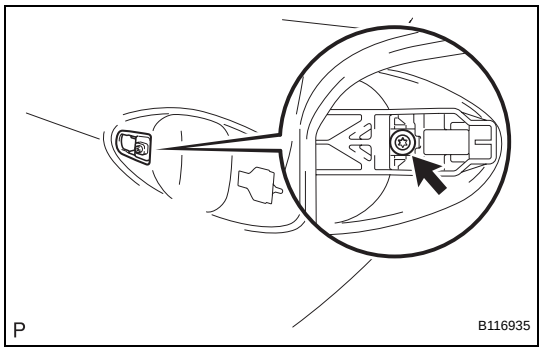

21. REMOVE REAR DOOR OUTSIDE HANDLE PAD FRONT

(a) Using "Torx" socket wrench T30, loosen the screw.

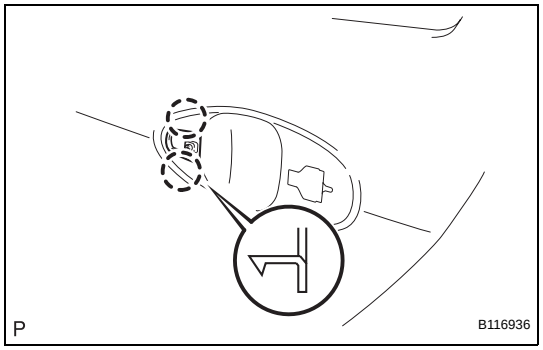

(b) Disengage the 2 claws and remove the rear door outside handle pad front.

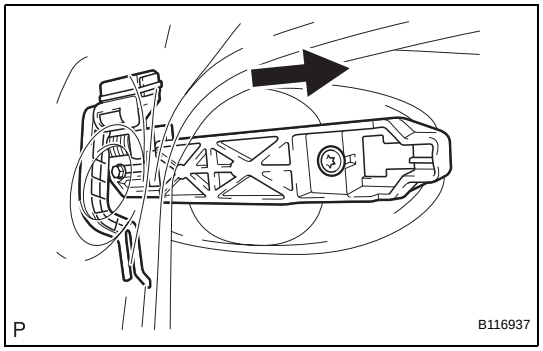

22. REMOVE REAR DOOR OUTSIDE HANDLE FRAME SUB-ASSEMBLY

(a) Slide the outside handle frame to remove it.

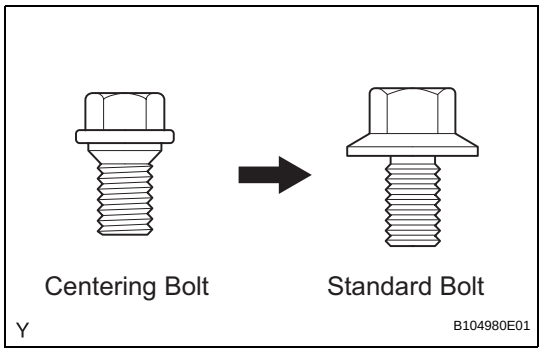

ADJUSTMENT

HINT:

- Before adjusting the door position on vehicles equipped with side airbags and curtain shield airbags, be sure to disconnect the battery. After adjustment, inspect the SRS warning light, the side airbag system and the curtain shield airbag system for normal operation. Then initialize both airbag systems.
- Use the same procedure for the RH and LH sides.
- The procedures described below are for the LH side.
- Centering bolts are used to mount the door hinge onto the vehicle body and door. The door cannot be adjusted with the centering bolts on. Substitute standard bolts (with washers) for the centering bolts when making adjustments.
- For bolts without torque specifications, check the standard bolt chart.

1. INSPECT REAR DOOR

(a) Check that the clearance measurements are within the standard ranges.

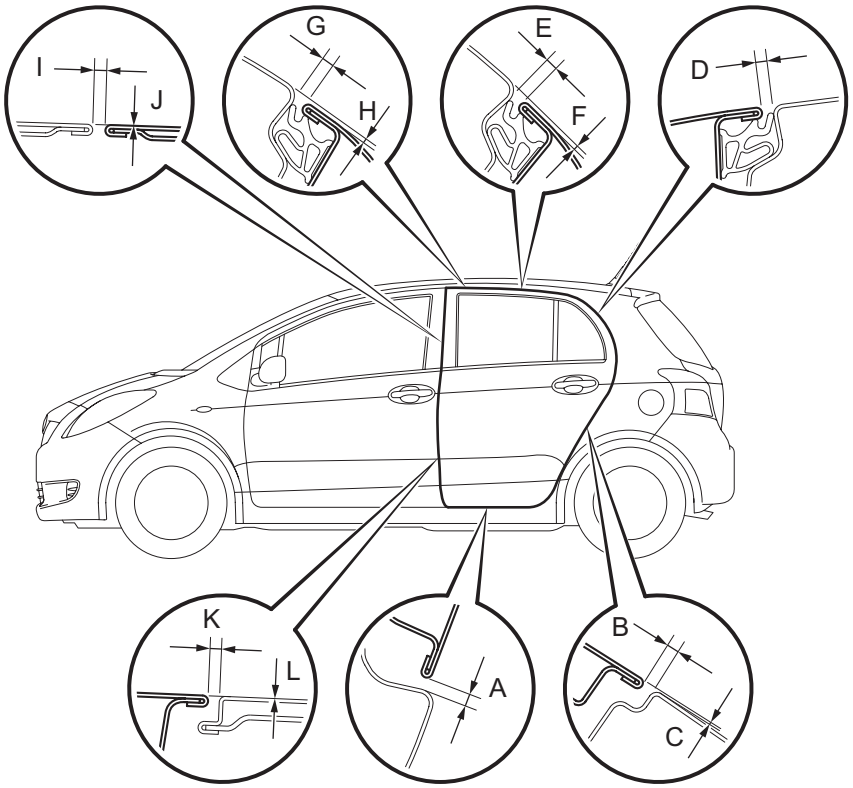

P B118068E01

Standard

Area	Measurement	Area	Measurement
A	4.1 to 7.1 mm (0.161 to 0.280 in.)	G	3.5 to 6.5mm (0.138 to 0.256 in.)
B	2.5 to 5.5mm (0.098 to 0.217 in.)	H	2.6 mm (0.102 in.)
C	-1.5 to 1.5mm (-0.059 to 0.059 in.)	I	3.3 to 6.3mm (0.130 to 0.248 in.)
D	2.5 to 5.5mm (0.098 to 0.217 in.)	J	-1.5 to 1.5mm (-0.059 to 0.059 in.)
E	3.5 to 6.5mm (0.138 to 0.256 in.)	K	3.3 to 6.3mm (0.130 to 0.248 in.)
F	1.9 mm (0.075 in.)	L	-1.5 to 1.5mm (-0.059 to 0.059 in.)

2. ADJUST REAR DOOR

(a) Disconnect the cable from the negative battery terminal.
Wait for at least 90 seconds after disconnecting the cable to prevent the airbag from working.

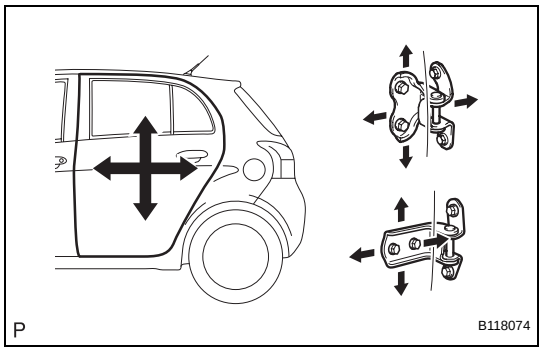

(b) Using SST, adjust the door horizontally and vertically by loosening the body side hinge bolts.
SST 09812-00010

(c) Tighten the body side hinge bolts after the adjustment.
Torque: 26 N*m (265 kgf*cm, 19 ft.*lbf)

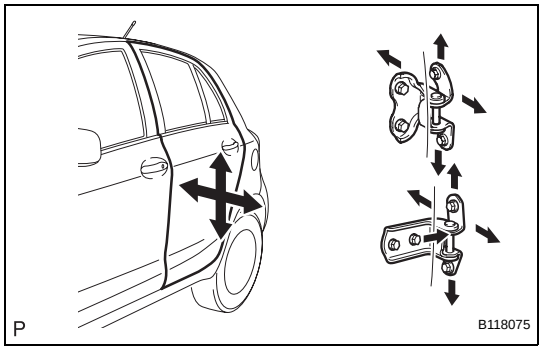

(d) Adjust the door horizontally and vertically by loosening the door side hinge bolts.

(e) Tighten the door side hinge bolts after the adjustment.
Torque: 26 N*m (265 kgf*cm, 19 ft.*lbf)

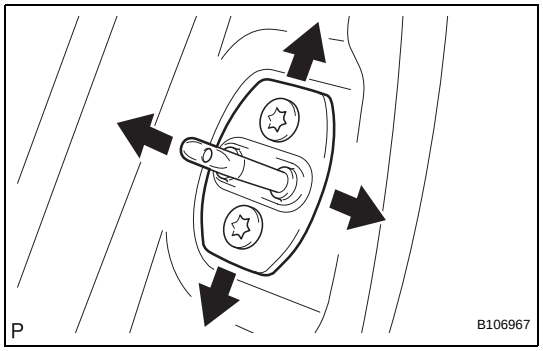

(f) Using "Torx" socket wrench T40, adjust the striker position by slightly loosening the striker mounting screws and hitting the striker with a plastic-faced hammer.

(g) Using "Torx" socket wrench T40, tighten the striker mounting screws after the adjustment.
Torque: 23 N*m (235 kgf*cm, 17 ft.*lbf)

(h) Connect the cable to the negative battery terminal.
Torque: 5.4 N*m (55 kgf*cm, 48 in.*lbf)

REASSEMBLY

1. INSTALL REAR DOOR OUTSIDE HANDLE FRAME SUB-ASSEMBLY

(a) Apply MP grease to the sliding areas of the rear door outside handle frame.

(b) Slide the outside handle frame to install it.

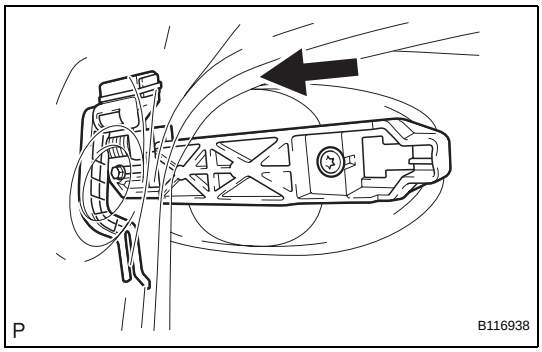

2. INSTALL REAR DOOR OUTSIDE HANDLE PAD FRONT

(a) Engage the 2 claws and install the rear door outside pad front.

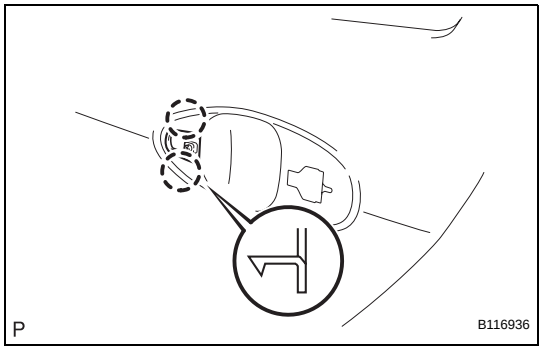

(b) Using "Torx" socket wrench T30, tighten the screw.
Torque: 4.0 N*m (41 kgf*cm, 35 in.*lbf)

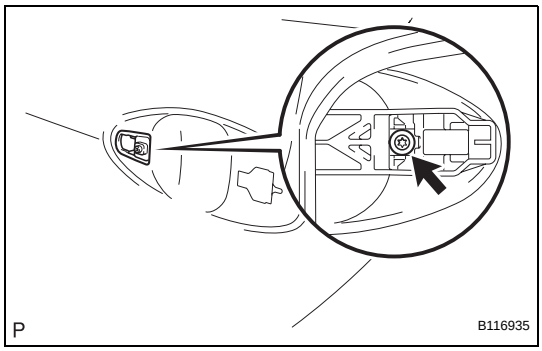

3. INSTALL REAR DOOR OUTSIDE HANDLE PAD REAR

(a) Engage the 2 claws and install the rear door outside pad rear.

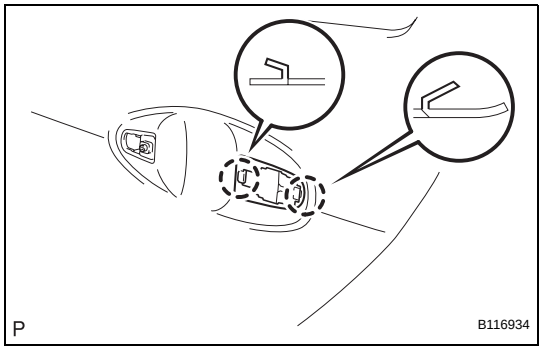

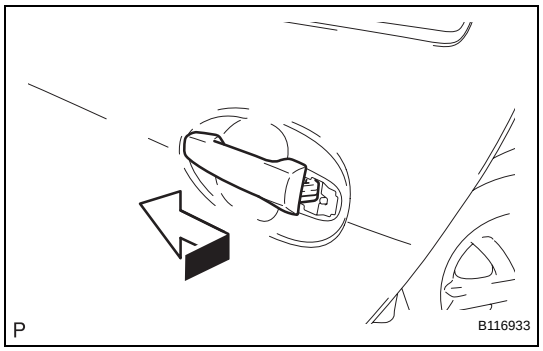

4. INSTALL REAR DOOR OUTSIDE HANDLE ASSEMBLY

(a) Pushing the rear door outside handle in the direction of the arrow mark shown in the illustration, install the rear door outside handle.

5. INSTALL REAR DOOR LOCK ASSEMBLY

NOTICE:

- **If reusing a door lock that has been removed, replace the packing in the connecting part with new.**
- **Make sure that no grease and dirt adheres to the packing surface in the connecting part.**

(a) Apply MP grease to the sliding and rotating areas of the front door lock.

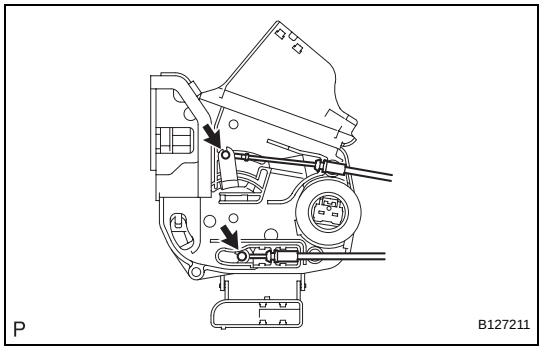

(b) Connect the rear door lock remote control cable and rear door inside locking cable.

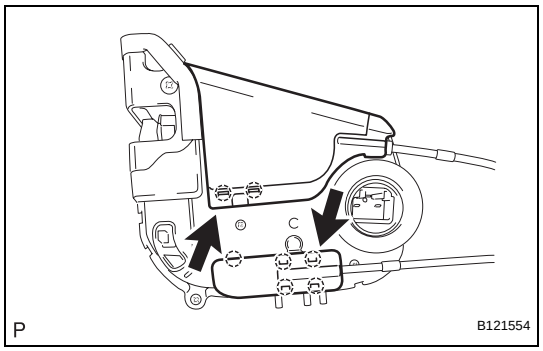

(c) Engage the 7 claws and close the 2 covers.

(d) Insert the door lock into the outside handle frame release plate, then set it onto the door panel.

(e) Make sure that the outside handle frame link is securely engaged with the door lock.

(f) Apply adhesive to the threads of the screws.
Adhesive:
Part No. 08833-00070, THREE BOND 1324 or the equivalent

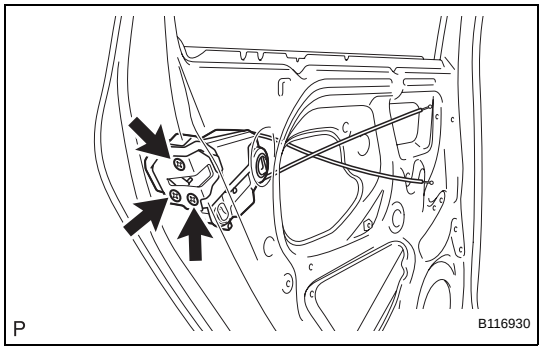

(g) Using "Torx" socket wrench T30, install the rear door lock with the 3 screws.
Torque: 5.0 N*m (51 kgf*cm, 44 in.*lbf)

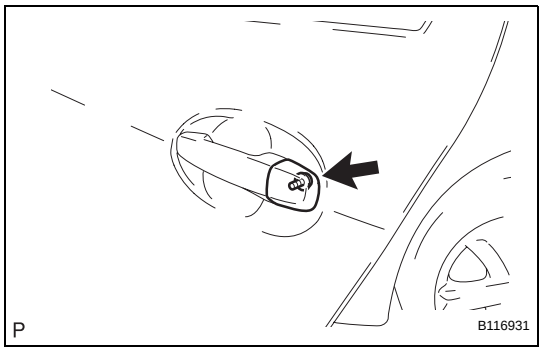

6. INSTALL REAR DOOR OUTSIDE HANDLE COVER

(a) Using "Torx" socket wrench T30, install the rear door outside handle cover with the screw.
Torque: 4.0 N*m (41 kgf*cm, 35 in.*lbf)

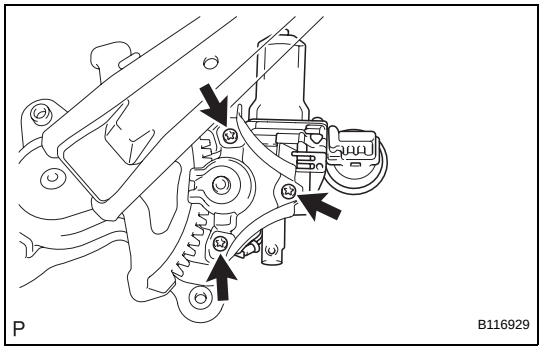

7. INSTALL POWER WINDOW REGULATOR MOTOR ASSEMBLY REAR

(a) Apply MP grease to the sliding and rotating areas of the regulator motor.
(b) Using "Torx" socket wrench T25, install the power window regulator motor with the 3 screws.
Torque: 5.4 N*m (55 kgf*cm, 48 in.*lbf)

8. INSTALL REAR DOOR WINDOW REGULATOR SUB-ASSEMBLY

(a) Apply MP grease to the sliding and rotating areas of the rear door window regulator.
NOTICE:
Do not apply grease to the window regulator spring.

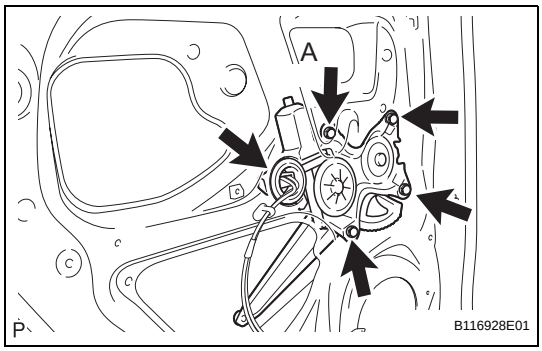

(b) Loosely screw bolt A onto the rear door window regulator.
(c) Insert the rear door window regulator into the door panel. Use bolt A to hang the rear door window regulator on the door panel.
NOTICE:
Do not drop the window regulator as it may be damaged.
(d) Install the rear door window regulator with the 4 bolts, and tighten bolt A.
Torque: 8.0 N*m (82 kgf*cm, 71 in.*lbf)
(e) Connect the connector.

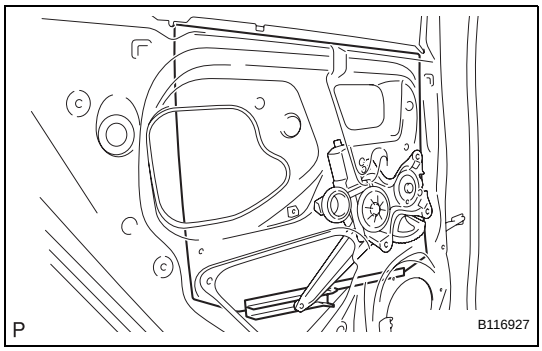

9. INSTALL REAR DOOR GLASS SUB-ASSEMBLY

(a) Install the rear door glass onto the rear door window regulator.

10. INSTALL REAR DOOR QUARTER WINDOW WEATHERSTRIP

(a) Install the rear door quarter window glass onto the rear door quarter window weatherstrip.

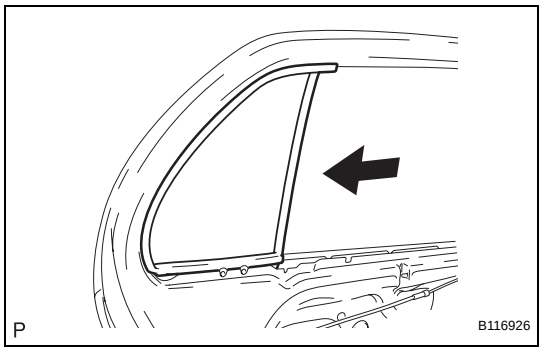

(b) Slide the rear door quarter window weatherstrip, in the direction indicated by the arrow in the illustration, to install it.

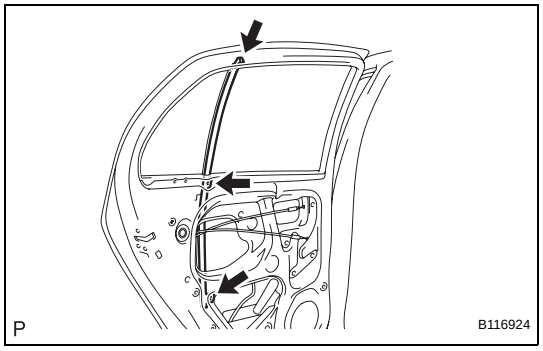

11. INSTALL REAR DOOR WINDOW DIVISION BAR SUB-ASSEMBLY

(a) Install the rear door window division bar with the 2 bolts and screw.
Torque: 6.2 N*m (63 kgf*cm, 54 in.*lbf)

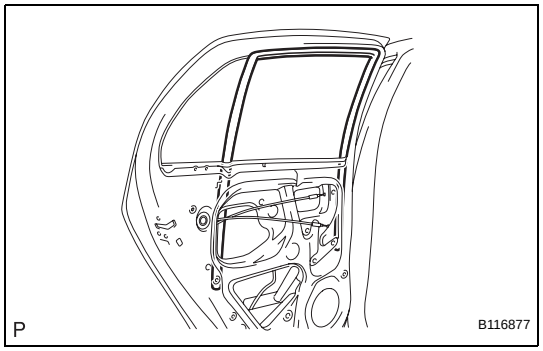

12. INSTALL REAR DOOR GLASS RUN

(a) Install the rear door glass run.

13. INSTALL REAR DOOR BELT MOULDING (See page ET-97)

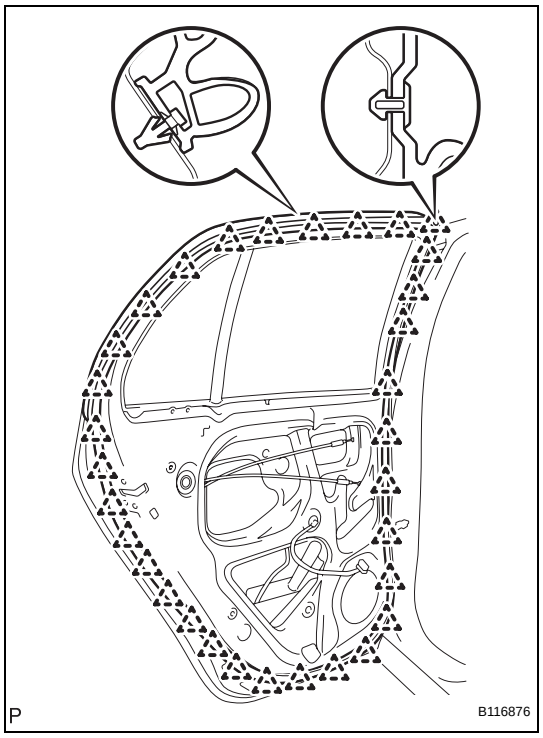

14. INSTALL REAR DOOR WEATHERSTRIP

(a) Engage the 32 clips and install the rear door weatherstrip.

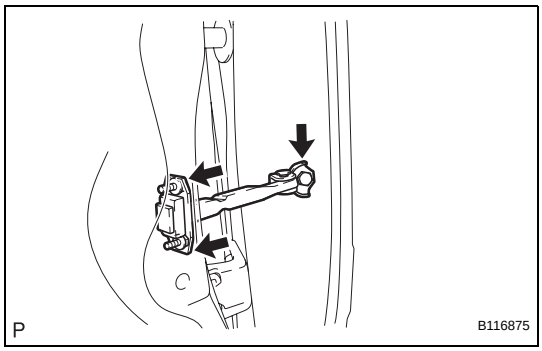

15. INSTALL REAR DOOR CHECK ASSEMBLY

(a) Apply MP grease to the sliding areas of the door check.

(b) Install the rear door check onto the door panel with the 2 bolts.
Torque: 5.5 N*m (56 kgf*cm, 49 in.*lbf)

(c) Apply adhesive to the threads of the bolt.
Adhesive:
Part No. 08833-00070, THREE BOND 1324 or the equivalent

(d) Install the rear door check onto the body panel with the bolt.
Torque: 30 N*m (306 kgf*cm, 22 ft.*lbf)

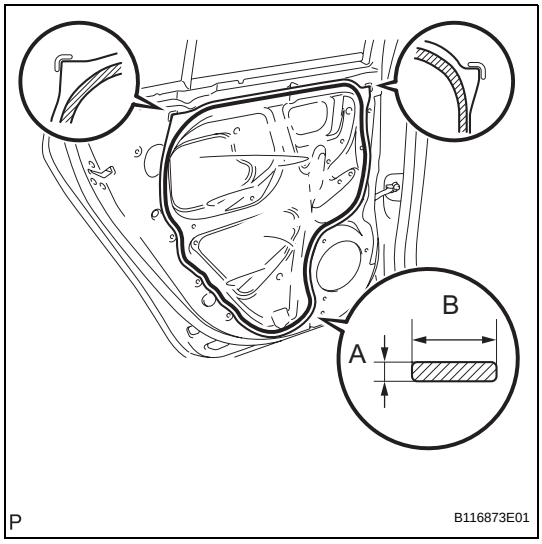

16. INSTALL REAR DOOR SERVICE HOLE COVER

(a) w/ Rear speaker:
Apply butyl tape to the door panel, then install the rear door service hole cover as shown in the illustration.
Adhesive:
Part No. 08850-00065, Butyl Tape Set or the equivalent
Specification

Area	Dimension
A	2.0 mm (0.079 in.) or more
B	6.0 mm (0.236 in.) or more

HINT:
- When installing the service hole cover, pull the links and connectors out through the service hole.
- There should be no wrinkles or folds after attaching the service hole cover.
- After attaching the service hole cover, check the quality of the seal.

ED

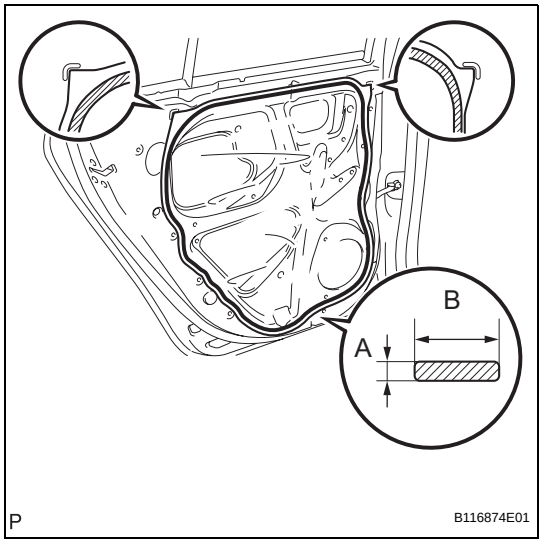

(b) w/o Rear speaker:
Apply butyl tape to the door panel, then install the rear door service hole cover as shown in the illustration.
Adhesive:
Part No. 08850-00065, Butyl Tape Set or the equivalent
Specification

Area	Dimension
A	2.0 mm (0.079 in.) or more
B	6.0 mm (0.236 in.) or more

HINT:
- When installing the service hole cover, pull the links and connectors out through the service hole.
- There should be no wrinkles or folds after attaching the service hole cover.
- After attaching the service hole cover, check the quality of the seal.

17. INSTALL REAR SPEAKER ASSEMBLY (w/ Rear Speaker) (See page AV-178)

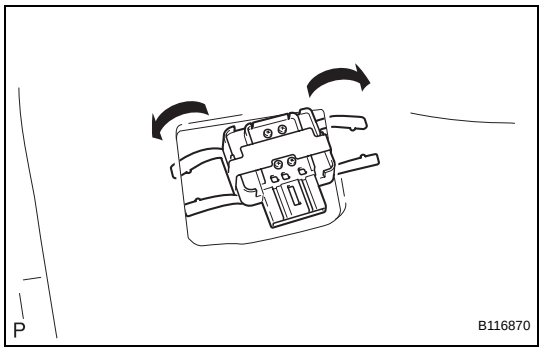

18. INSTALL POWER WINDOW REGULATOR SWITCH ASSEMBLY REAR

(a) Engage the set plate and install the power window regulator switch.

19. INSTALL REAR DOOR GLASS WEATHERSTRIP INNER

(a) Install the rear door glass weatherstrip inner onto the rear door trim board.

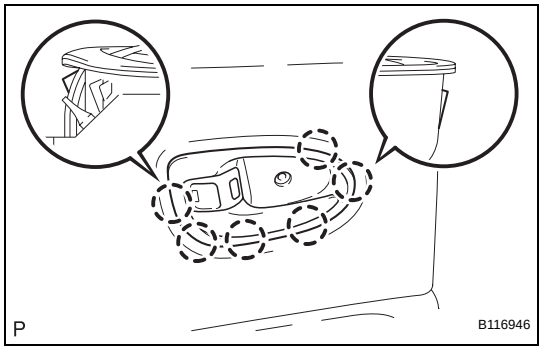

20. INSTALL REAR DOOR INSIDE HANDLE SUB-ASSEMBLY

(a) Engage the 6 claws and install the rear door inside handle.

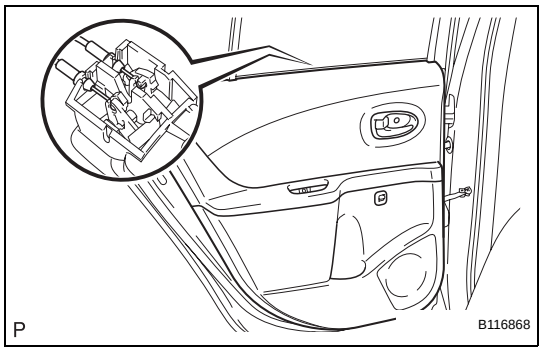

21. INSTALL REAR DOOR TRIM BOARD SUB-ASSEMBLY

(a) Connect the rear door lock remote control cable and rear door inside locking cable.

(b) Connect the connector.

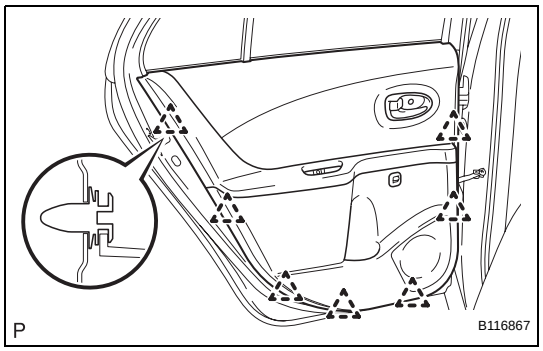

(c) Engage the 7 clips and install the rear door trim board.

ED

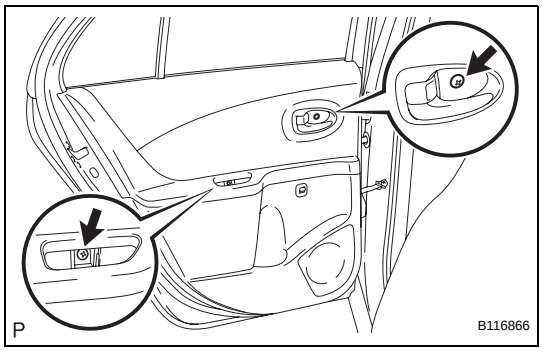

(d) Tighten the 2 screws.

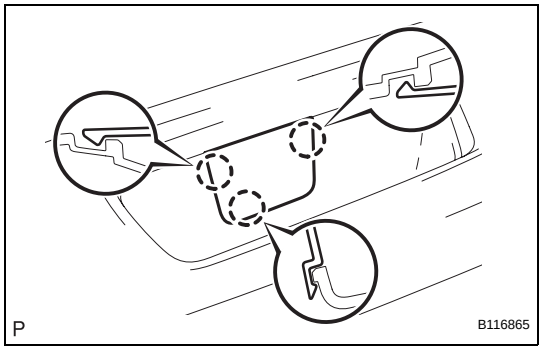

(e) Engage the 3 claws and install the rear door armrest plug.

22. CONNECT CABLE TO NEGATIVE BATTERY TERMINAL
Torque: 5.4 N*m (55 kgf*cm, 48 in.*lbf)

REAR DOOR (for Hatchback without Power Window)

COMPONENTS

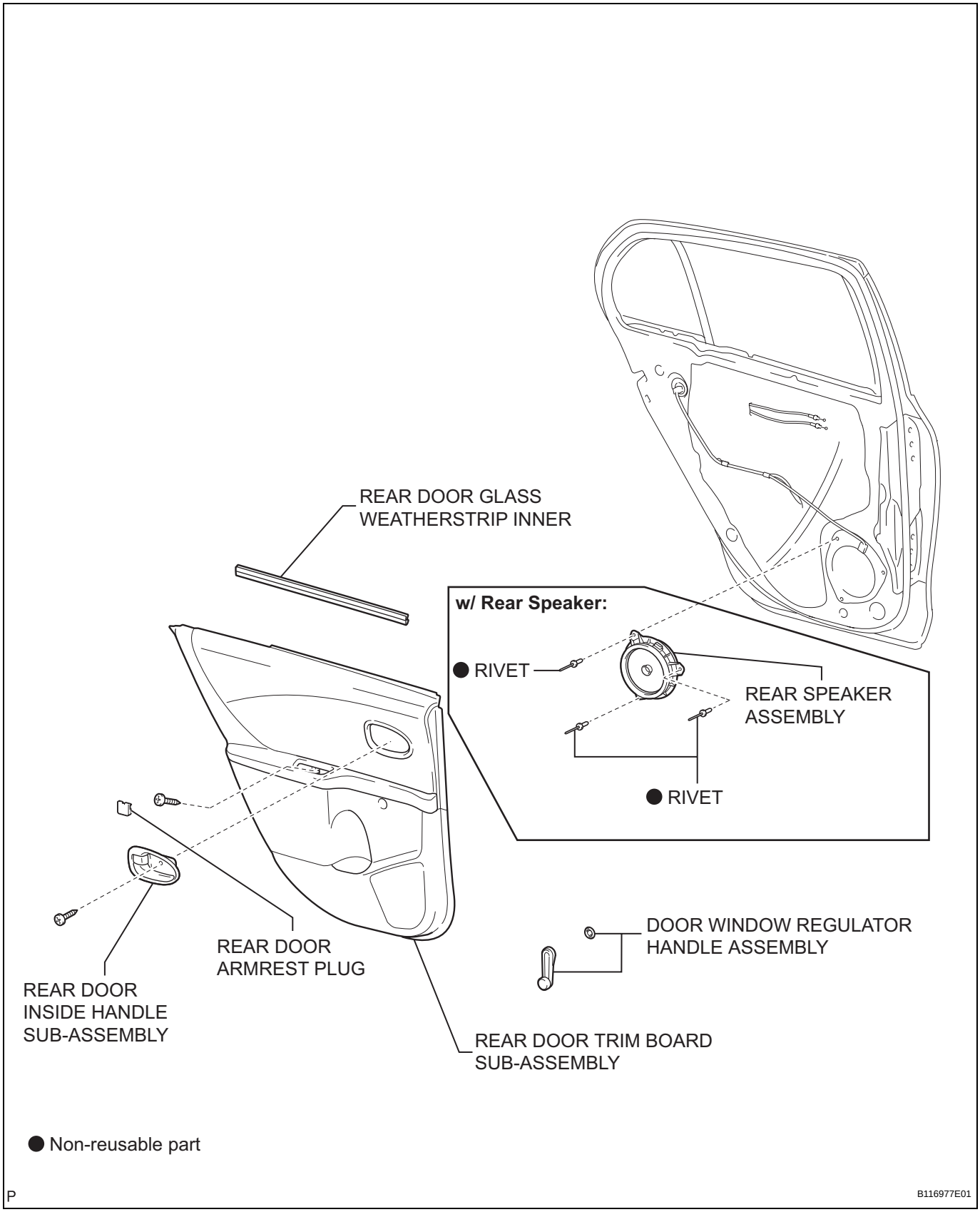

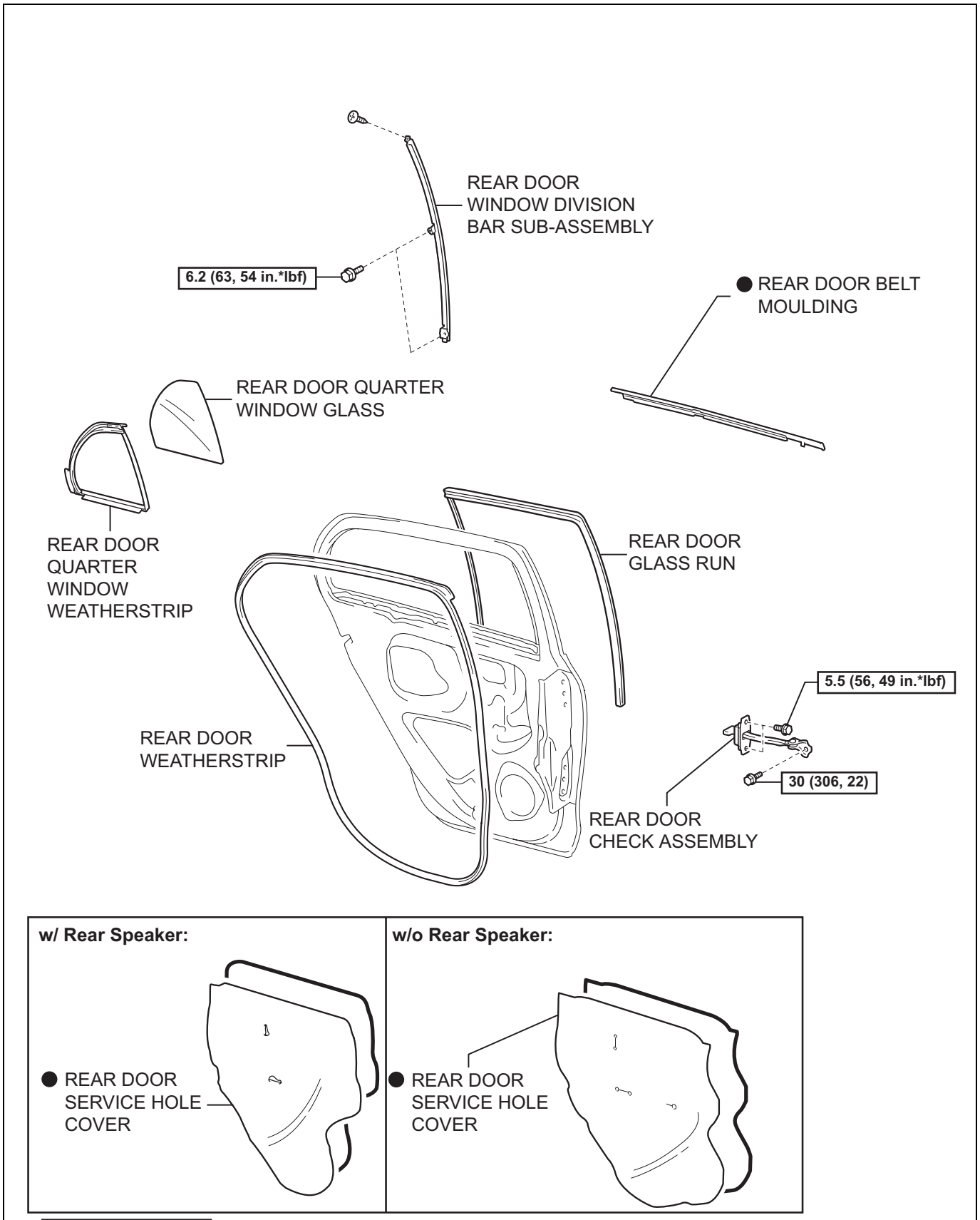

N*m (kgf*cm, ft*lbf) : Specified torque

● Non-reusable part

P

B116975E01

ED

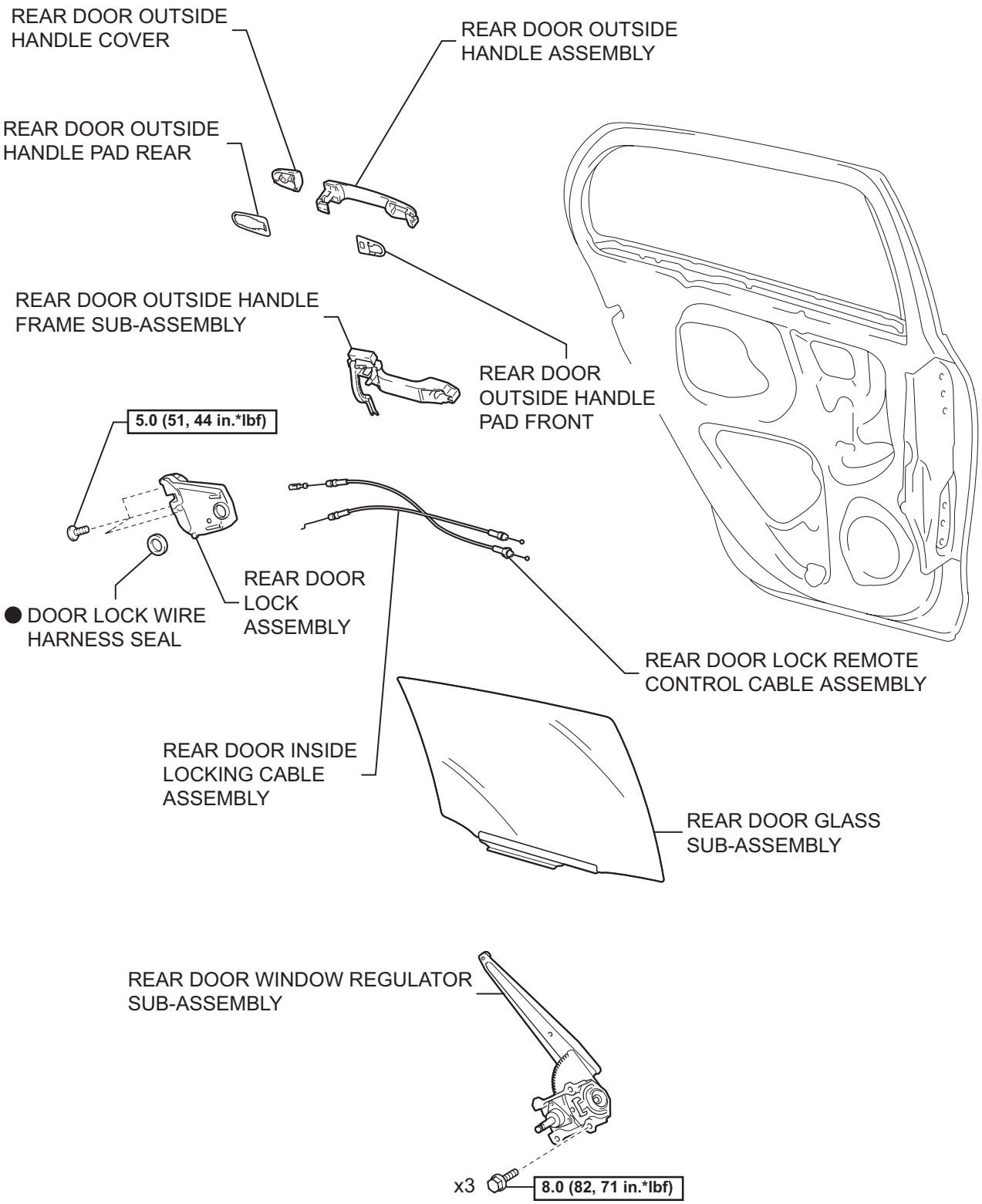

N*m (kgf*cm, ft*lbf) : Specified torque

● Non-reusable part

P

B116978E01

ED

DISASSEMBLY

HINT:
- Use the same procedure for both the RH and LH side.
- The procedure described below is for the LH side.

1. DISCONNECT CABLE FROM NEGATIVE BATTERY TERMINAL

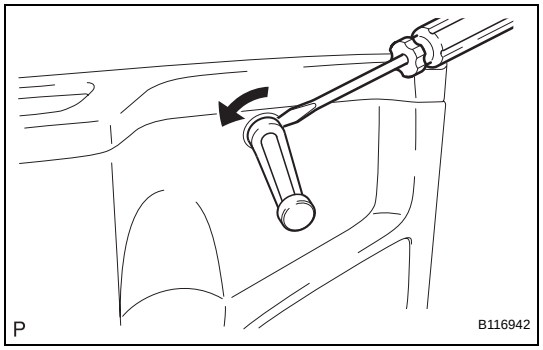

2. REMOVE DOOR WINDOW REGULATOR HANDLE ASSEMBLY
(a) Insert a clip remover between the plate and door trim.
(b) Turn the handle with the clip remover inserted, as shown in the illustration.
(c) Remove the rear door window regulator handle assembly and clip.
(d) Remove the window regulator handle plate.

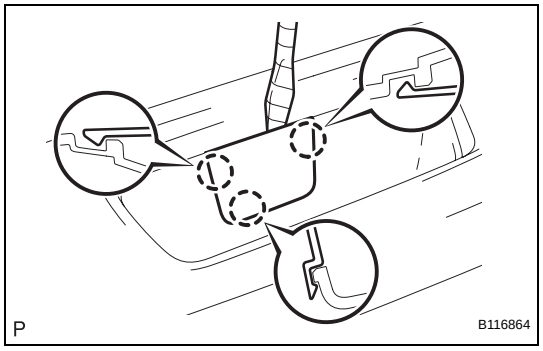

3. REMOVE REAR DOOR TRIM BOARD SUB-ASSEMBLY
(a) Using a screwdriver with its tip wrapped in protective tape, disengage the 3 claws and remove the rear door armrest plug.

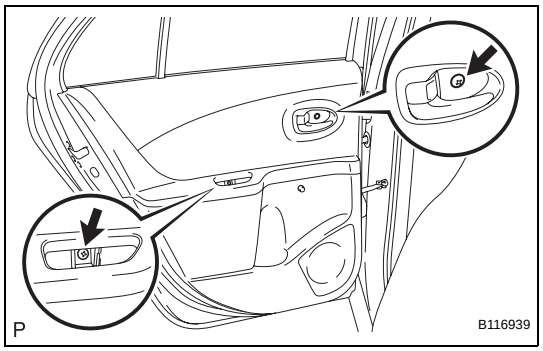

(b) Remove the 2 screws.

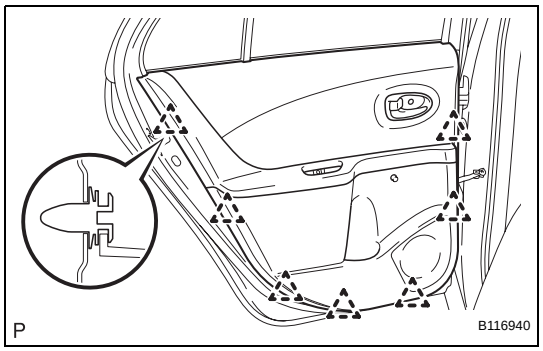

(c) Disengage the 7 clips.
(d) Disconnect the connector.

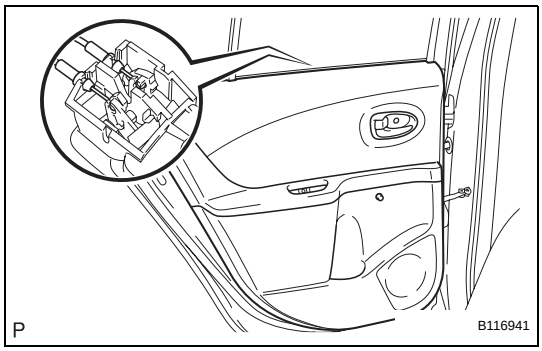

(e) Disconnect the rear door lock remote control cable and rear door inside locking cable and remove the rear door trim board.

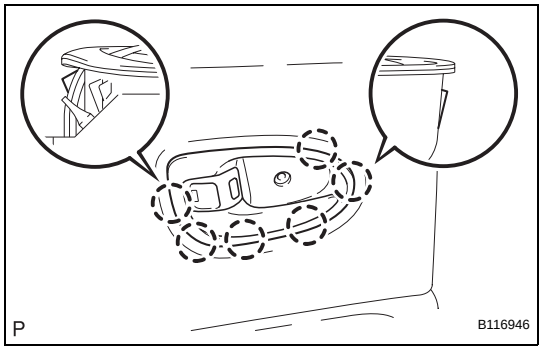

4. REMOVE REAR DOOR INSIDE HANDLE SUB-ASSEMBLY

(a) Disengage the 6 claws and remove the rear door inside handle.

5. REMOVE REAR DOOR GLASS WEATHERSTRIP INNER

(a) Remove the rear door glass weatherstrip inner from the rear door trim board.

6. REMOVE REAR SPEAKER ASSEMBLY (w/ Rear Speaker) (See page AV-178)

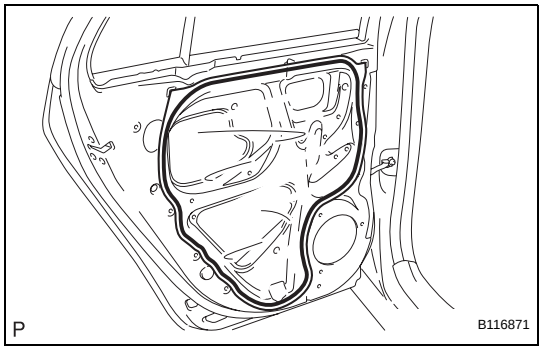

7. REMOVE REAR DOOR SERVICE HOLE COVER

(a) w/ Rear speaker:
Disconnect the connectors and clamps, then remove the rear door service hole cover.
NOTICE:
Remove any tape remaining on the door side.

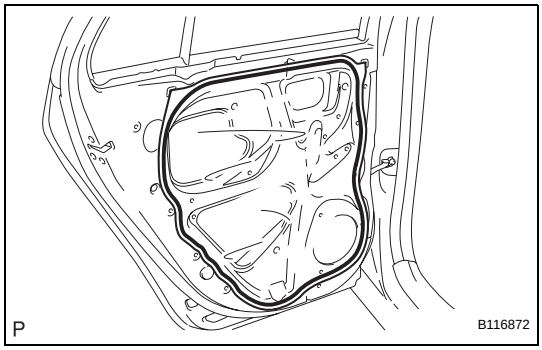

(b) w/o Rear speaker:
Disconnect the connectors and clamps, then remove the rear door service hole cover.
NOTICE:
Remove any tape remaining on the door side.

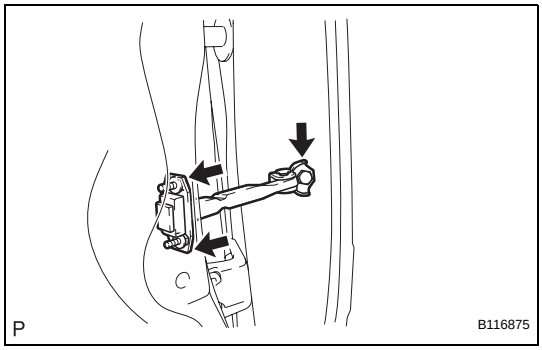

8. REMOVE REAR DOOR CHECK ASSEMBLY

(a) Remove the 3 bolts, then remove the rear door check.
NOTICE:
Do not drop or damage the door check when removing the bolts.
HINT:
Remove the door check through the service hole.

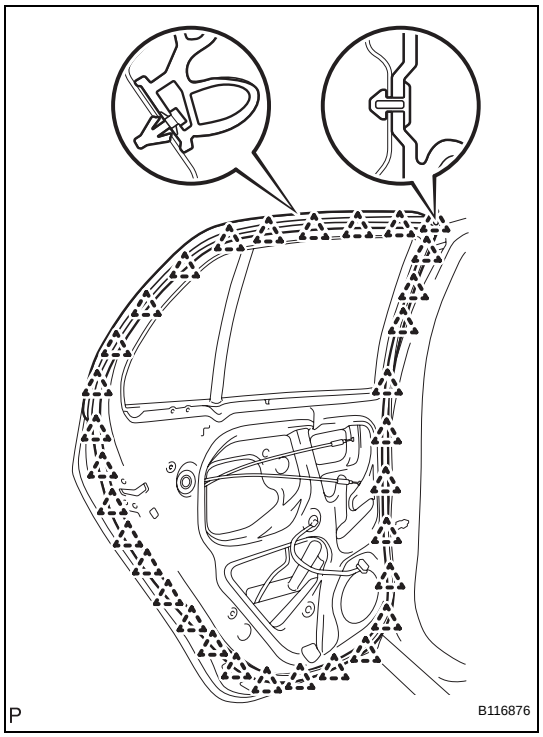

9. REMOVE REAR DOOR WEATHERSTRIP

(a) Disengage the 32 clips and remove the rear door weatherstrip.

NOTICE:

Remove any tape remaining on the door side.

10. REMOVE REAR DOOR BELT MOULDING (See page ET-97)

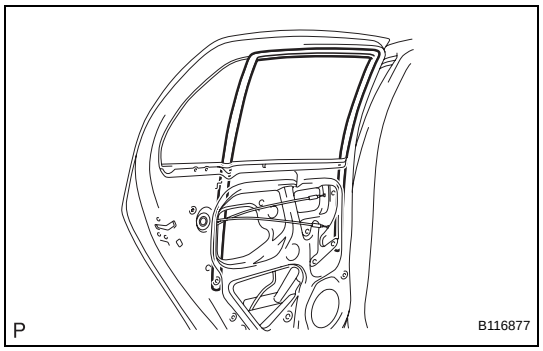

11. REMOVE REAR DOOR GLASS RUN

(a) Remove the rear door glass run.

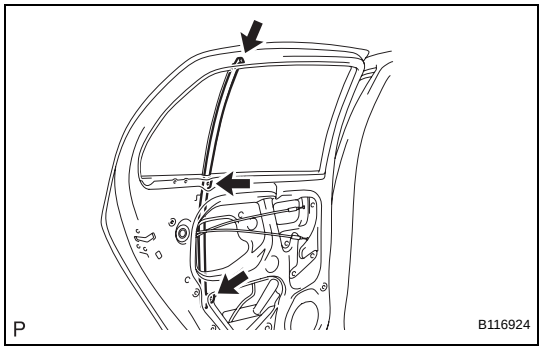

12. REMOVE REAR DOOR WINDOW DIVISION BAR SUB-ASSEMBLY

(a) Remove the 2 bolts and screw and rear door window division bar.

NOTICE:

Do not drop or damage the rear door window division bar when removing the bolts and screw.

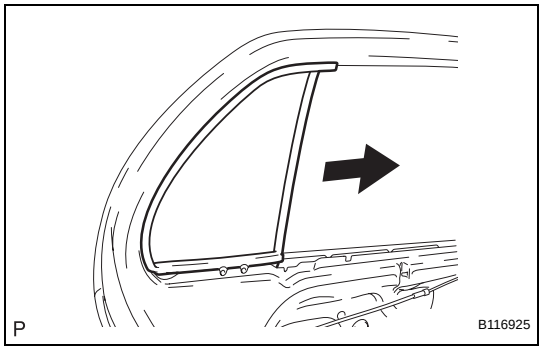

13. REMOVE REAR DOOR QUARTER WINDOW WEATHERSTRIP

(a) Slide the rear door quarter window weatherstrip, in the direction indicated by the arrow in the illustration, to remove it.

(b) Remove the rear door quarter window glass from the rear door quarter window weatherstrip.

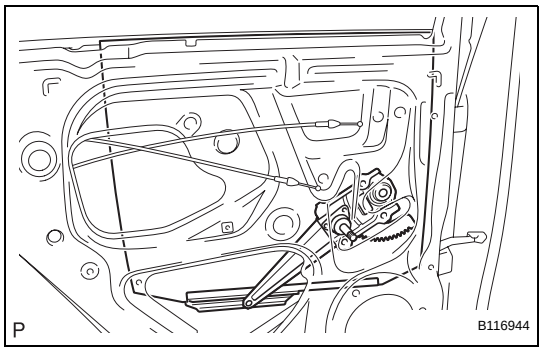

14. REMOVE REAR DOOR GLASS SUB-ASSEMBLY

(a) Remove the rear door glass from the rear door window regulator.

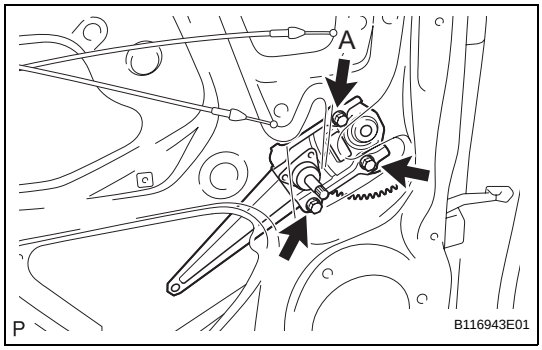

15. REMOVE REAR DOOR WINDOW REGULATOR SUB-ASSEMBLY

(a) Loosen bolt A.

(b) Remove the 2 bolts, then remove the rear door window regulator.

NOTICE:

Do not drop or damage the window regulator when removing the bolts.

HINT:

Remove the window regulator through the service hole.

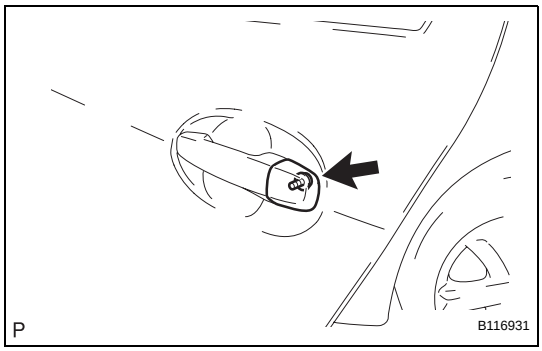

16. REMOVE REAR DOOR OUTSIDE HANDLE COVER

(a) Using "Torx" socket wrench T30, remove the screw and rear door outside handle cover.

ED

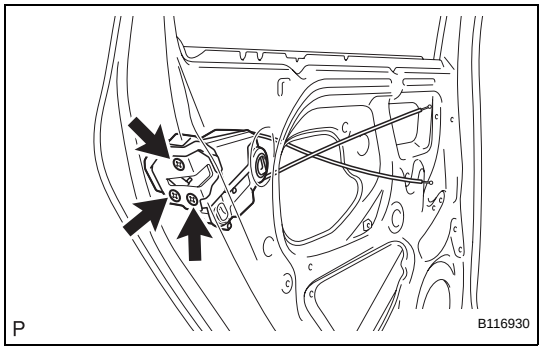

17. REMOVE REAR DOOR LOCK ASSEMBLY

(a) Using "Torx" socket wrench T30, remove the 3 screws.

(b) Move the rear door lock downward, remove the outside handle frame release plate and remove the rear door lock.

NOTICE:

Do not drop or damage the door lock when removing the bolts.

HINT:

Remove the rear door lock through the service hole.

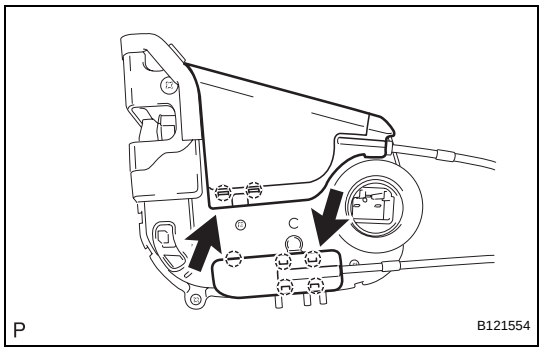

(c) Disengage the 7 claws and open the 2 covers.

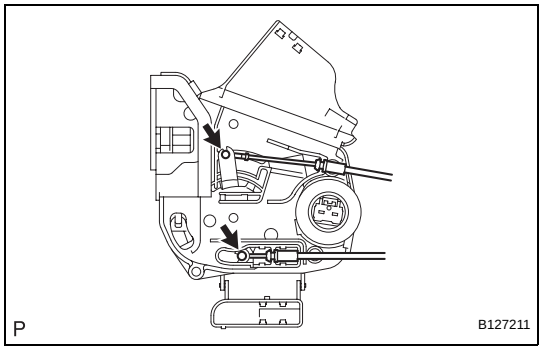

(d) Disconnect the rear door lock remote control cable and rear door inside locking cable.
(e) Remove the door lock wire harness seal.

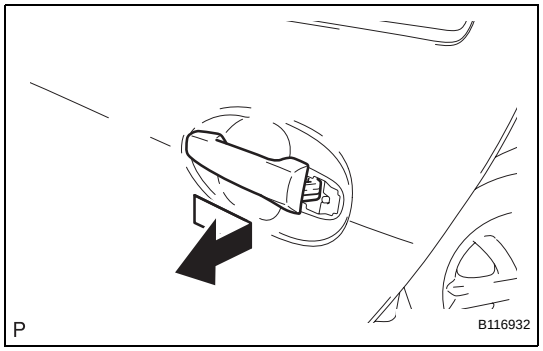

18. REMOVE REAR DOOR OUTSIDE HANDLE ASSEMBLY

(a) Remove the handle by sliding and pulling it in the direction indicated by the arrow mark in the illustration.

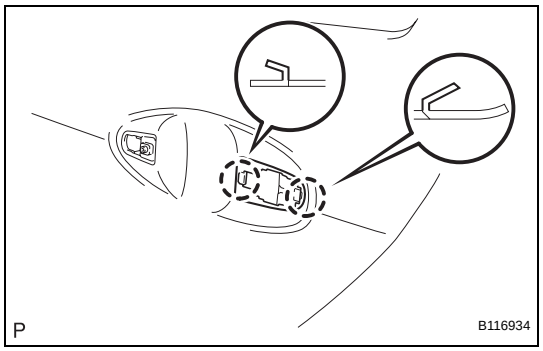

19. REMOVE REAR DOOR OUTSIDE HANDLE PAD REAR

(a) Disengage the 2 claws and remove the rear door outside handle pad rear.

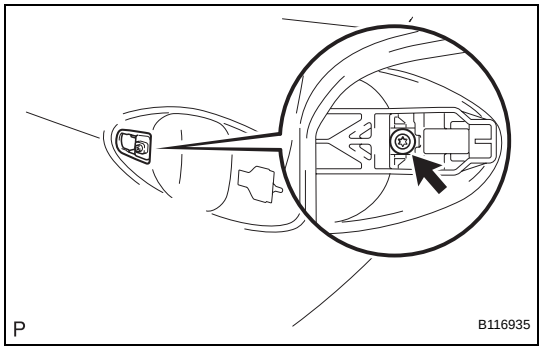

20. REMOVE REAR DOOR OUTSIDE HANDLE PAD FRONT

(a) Using "Torx" socket wrench T30, loosen the screw.

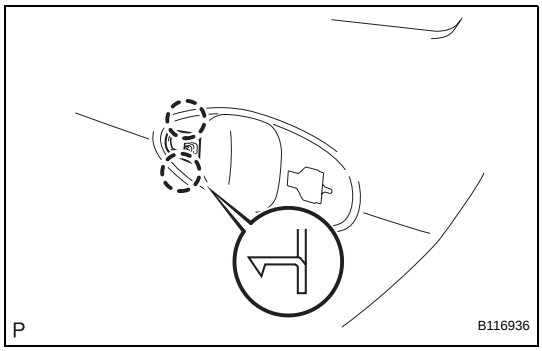

(b) Disengage the 2 claws and remove the rear door outside handle pad front.

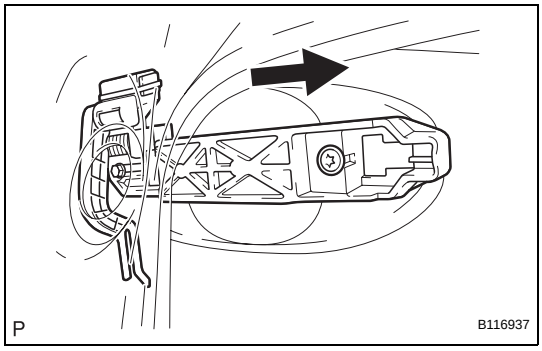

21. REMOVE REAR DOOR OUTSIDE HANDLE FRAME SUB-ASSEMBLY

(a) Slide the outside handle frame to remove it.

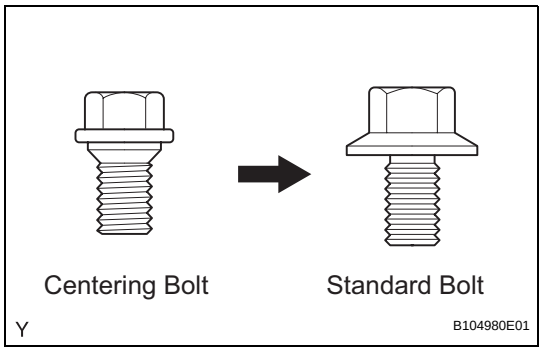

ADJUSTMENT

HINT:

- Before adjusting the door position on vehicles equipped with side airbags and curtain shield airbags, be sure to disconnect the battery. After adjustment, inspect the SRS warning light, the side airbag system and the curtain shield airbag system for normal operation. Then initialize both airbag systems.
- Use the same procedure for the RH and LH sides.
- The procedures described below are for the LH side.
- Centering bolts are used to mount the door hinge onto the vehicle body and door. The door cannot be adjusted with the centering bolts on. Substitute standard bolts (with washers) for the centering bolts when making adjustments.
- For bolts without torque specifications, check the standard bolt chart.

1. INSPECT REAR DOOR

(a) Check that the clearance measurements are within the standard ranges.

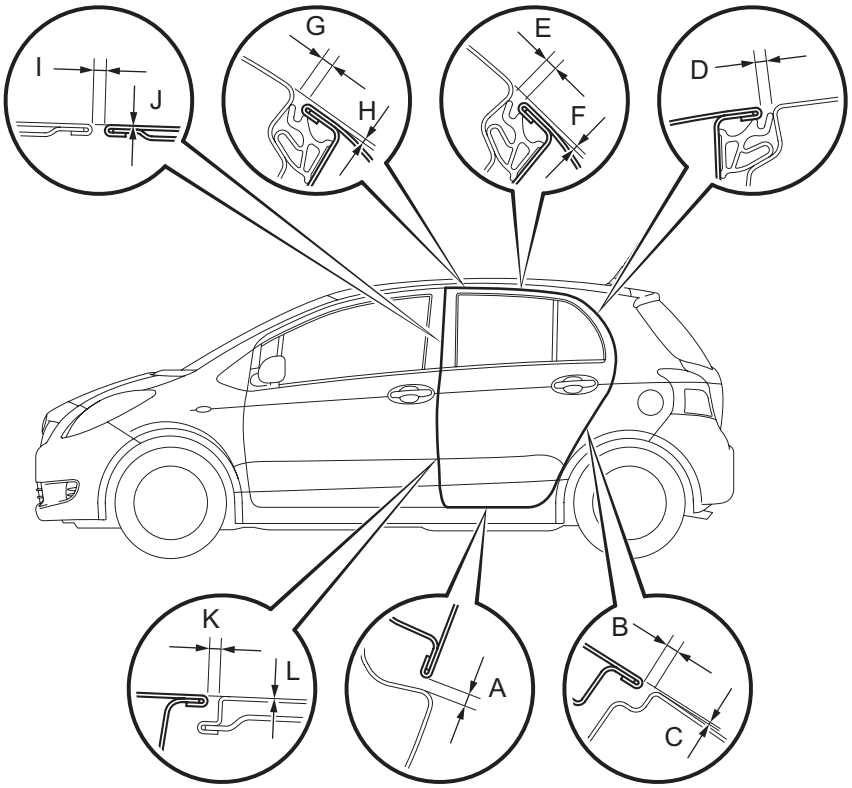

P B118068E01

Standard

Area	Measurement	Area	Measurement
A	4.1 to 7.1 mm (0.161 to 0.280 in.)	G	3.5 to 6.5 mm (0.138 to 0.256 in.)
B	2.5 to 5.5 mm (0.098 to 0.217 in.)	H	2.6 mm (0.102 in.)
C	-1.5 to 1.5 mm (-0.059 to 0.059 in.)	I	3.3 to 6.3 mm (0.130 to 0.248 in.)
D	2.5 to 5.5 mm (0.098 to 0.217 in.)	J	-1.5 to 1.5 mm (-0.059 to 0.059 in.)
E	3.5 to 6.5 mm (0.138 to 0.256 in.)	K	3.3 to 6.3 mm (0.130 to 0.248 in.)
F	1.9 mm (0.075 in.)	L	-1.5 to 1.5 mm (-0.059 to 0.059 in.)

2. ADJUST REAR DOOR

(a) Disconnect the cable from the negative battery terminal.
Wait for at least 90 seconds after disconnecting the cable to prevent the airbag from working.

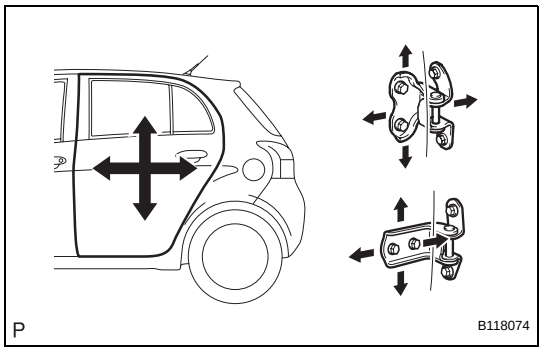

(b) Using SST, adjust the door horizontally and vertically by loosening the body side hinge bolts.
SST 09812-00010

(c) Tighten the body side hinge bolts after the adjustment.
Torque: 26 N*m (265 kgf*cm, 19 ft.*lbf)

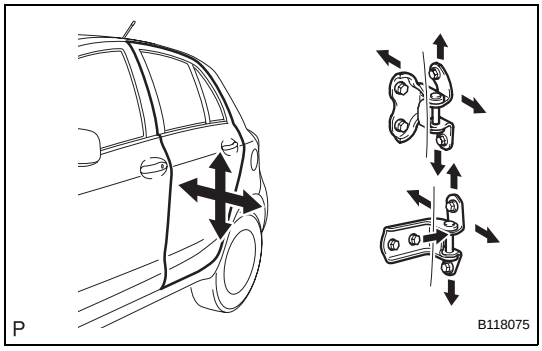

(d) Adjust the door horizontally and vertically by loosening the door side hinge bolts.

(e) Tighten the door side hinge bolts after the adjustment.
Torque: 26 N*m (265 kgf*cm, 19 ft.*lbf)

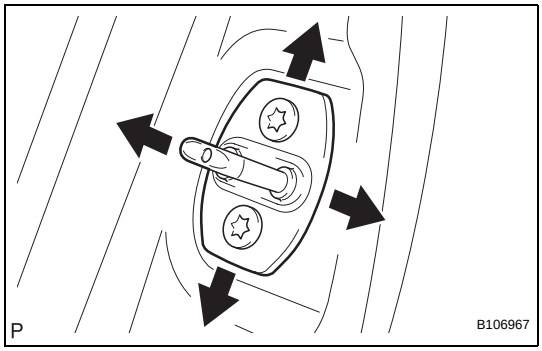

(f) Using "Torx" socket wrench T40, adjust the striker position by slightly loosening the striker mounting screws and hitting the striker with a plastic-faced hammer.

(g) Using "Torx" socket wrench T40, tighten the striker mounting screws after the adjustment.
Torque: 23 N*m (235 kgf*cm, 17 ft.*lbf)

(h) Connect the cable to the negative battery terminal.
Torque: 5.4 N*m (55 kgf*cm, 48 in.*lbf)

REASSEMBLY

1. INSTALL REAR DOOR OUTSIDE HANDLE FRAME SUB-ASSEMBLY

(a) Apply MP grease to the sliding areas of the rear door outside handle frame.

(b) Slide the outside handle frame to install it.

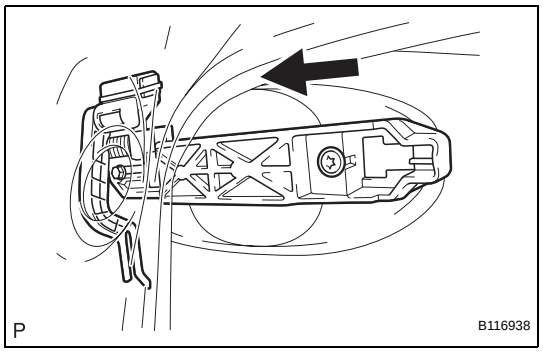

2. INSTALL REAR DOOR OUTSIDE HANDLE PAD FRONT

(a) Engage the 2 claws and install the rear door outside pad front.

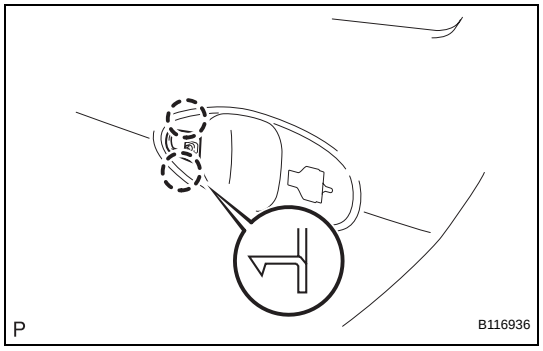

(b) Using "Torx" socket wrench T30, tighten the screw.
Torque: 4.0 N*m (41 kgf*cm, 35 in.*lbf)

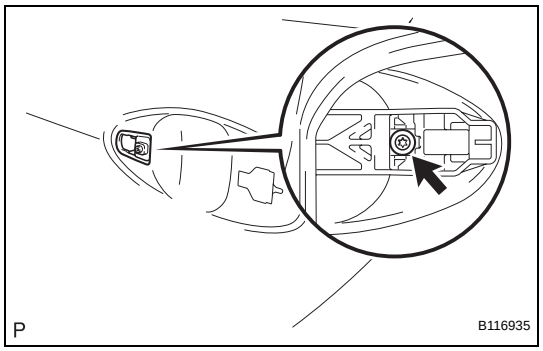

3. INSTALL REAR DOOR OUTSIDE HANDLE PAD REAR

(a) Engage the 2 claws and install the rear door outside pad rear.

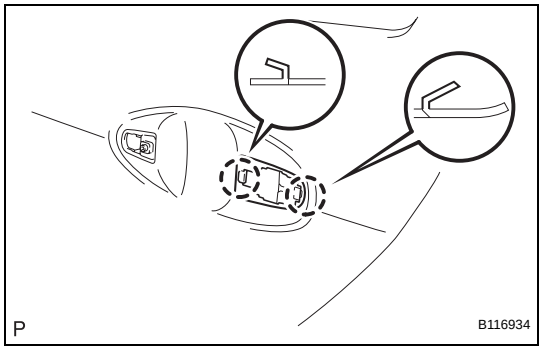

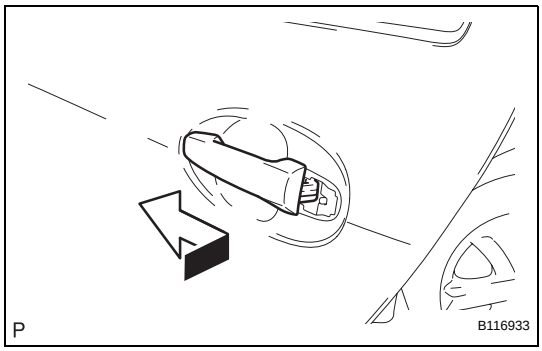

4. INSTALL REAR DOOR OUTSIDE HANDLE ASSEMBLY

(a) Pushing the rear door outside handle in the direction of the arrow mark shown in the illustration, install the rear door outside handle.

5. INSTALL REAR DOOR LOCK ASSEMBLY

NOTICE:

- **If reusing a door lock that has been removed, replace the packing in the connecting part with new.**
- **Make sure that no grease and dirt adheres to the packing surface in the connecting part.**

(a) Apply MP grease to the sliding and rotating areas of the front door lock.

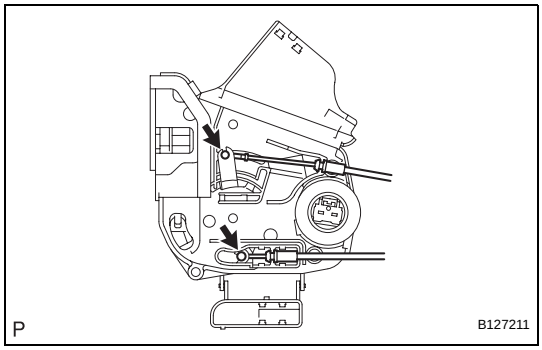

(b) Connect the rear door lock remote control cable and rear door inside locking cable.

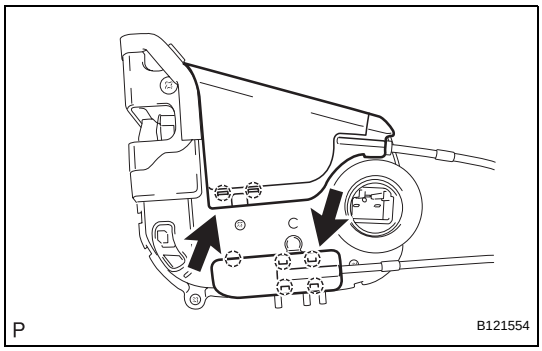

(c) Engage the 7 claws and close the 2 covers.

(d) Insert the door lock into the outside handle frame release plate, then set it onto the door panel.

(e) Make sure that the outside handle frame link is securely engaged with the door lock.

(f) Apply adhesive to the threads of the screws.
Adhesive:
Part No. 08833-00070, THREE BOND 1324 or the equivalent

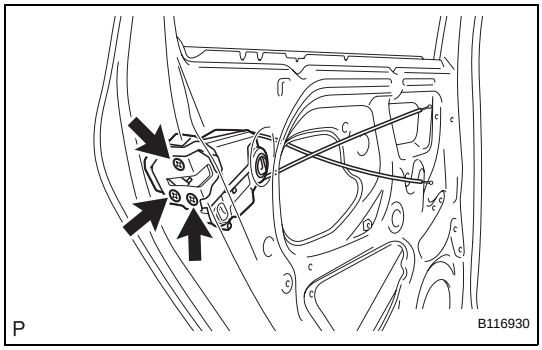

(g) Using "Torx" socket wrench T30, install the rear door lock with the 3 screws.
Torque: 5.0 N*m (51 kgf*cm, 44 in.*lbf)

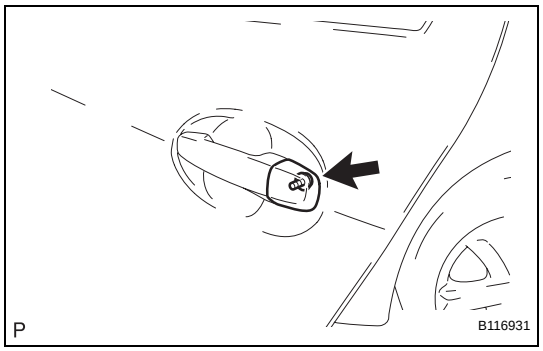

6. INSTALL REAR DOOR OUTSIDE HANDLE COVER

(a) Using "Torx" socket wrench T30, install the rear door outside handle cover with the screw.
Torque: 4.0 N*m (41 kgf*cm, 35 in.*lbf)

7. INSTALL REAR DOOR WINDOW REGULATOR SUB-ASSEMBLY

(a) Apply MP grease to the sliding and rotating areas of the rear door window regulator.
NOTICE:
Do not apply grease to the window regulator spring.

(b) Loosely screw bolt A onto the rear door window regulator.

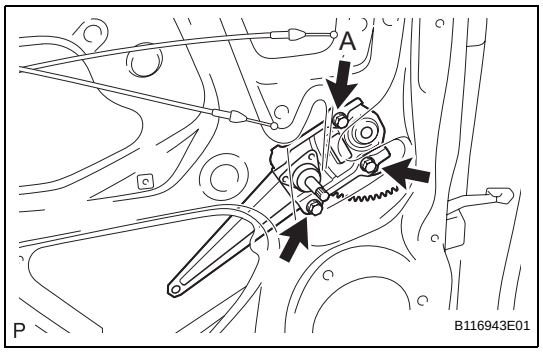

(c) Install the rear door window regulator into the door panel. Use bolt A to hang the rear door window regulator on the door panel.
NOTICE:
Do not drop the window regulator as it may be damaged.

(d) Install the rear door window regulator with the 2 bolts, and tighten bolt A.
Torque: 8.0 N*m (82 kgf*cm, 71 in.*lbf)

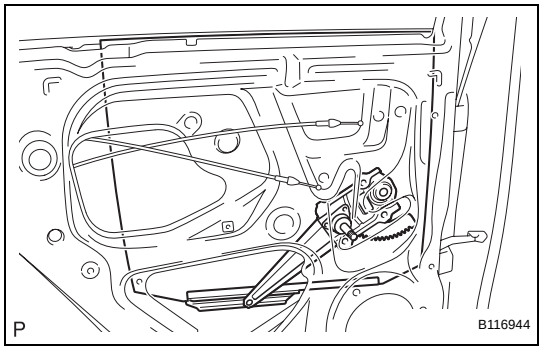

8. INSTALL REAR DOOR GLASS SUB-ASSEMBLY

(a) Install the rear door glass onto the rear door window regulator.

9. INSTALL REAR DOOR QUARTER WINDOW WEATHERSTRIP

(a) Install the rear door quarter window glass onto the rear door quarter window weatherstrip.

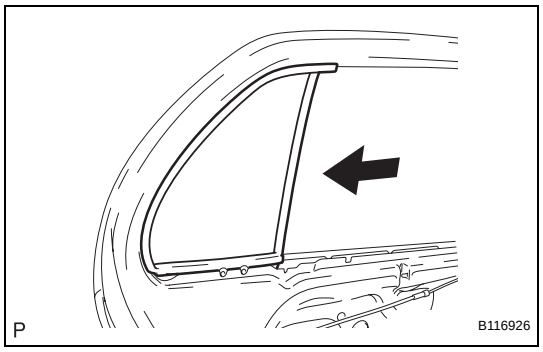

(b) Slide the rear door quarter window weatherstrip, in the direction indicated by the arrow in the illustration, to install it.

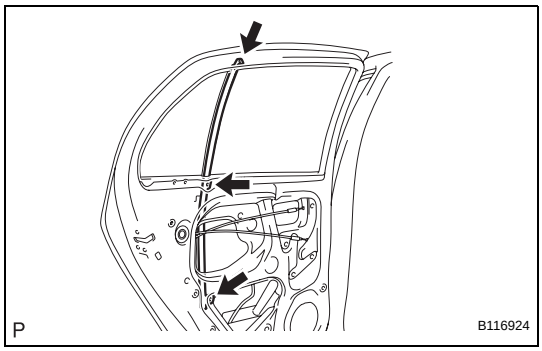

10. INSTALL REAR DOOR WINDOW DIVISION BAR SUB-ASSEMBLY

(a) Install the rear door window division bar with the 2 bolts and screw.
Torque: 6.2 N*m (63 kgf*cm, 54 in.*lbf)

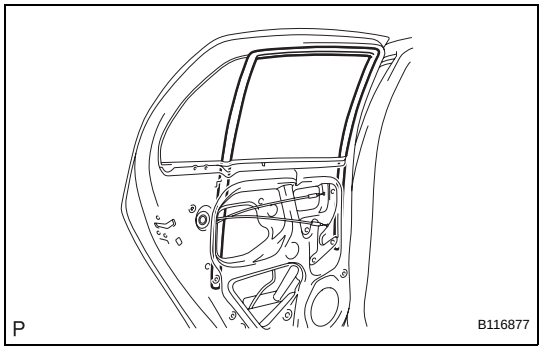

11. INSTALL REAR DOOR GLASS RUN

(a) Install the rear door glass run.

12. INSTALL REAR DOOR BELT MOULDING (See page ET-97)

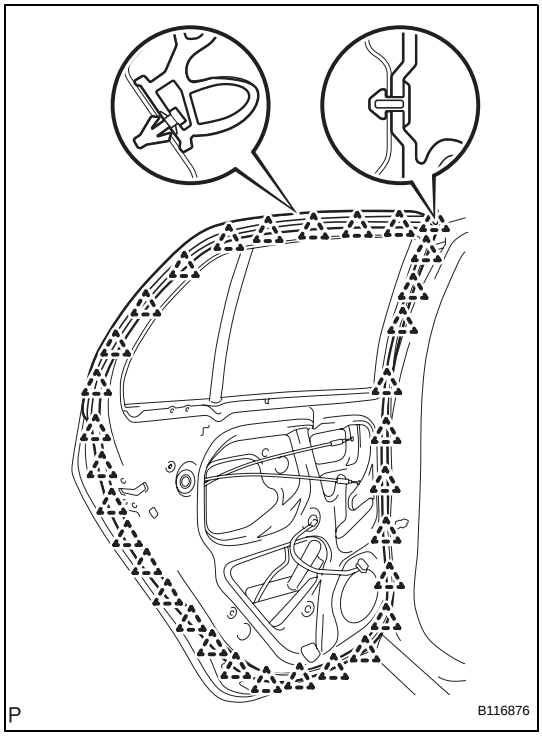

13. INSTALL REAR DOOR WEATHERSTRIP

(a) Engage the 32 clips and install the rear door weatherstrip.

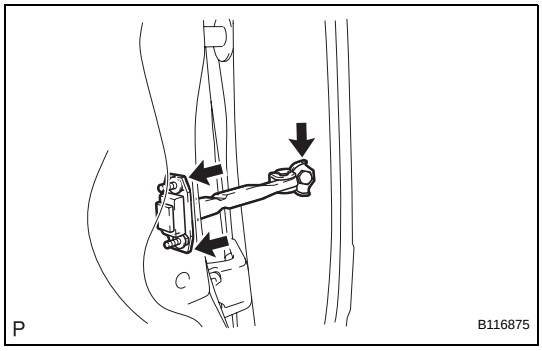

14. INSTALL REAR DOOR CHECK ASSEMBLY

(a) Apply MP grease to the sliding areas of the door check.

(b) Install the rear door check onto the door panel with the 2 bolts.
Torque: 5.5 N*m (56 kgf*cm, 49 in.*lbf)

(c) Apply adhesive to the threads of the bolt.
Adhesive:
Part No. 08833-00070, THREE BOND 1324 or the equivalent

(d) Install the rear door check onto the body panel with the bolt.
Torque: 30 N*m (306 kgf*cm, 22 ft.*lbf)

15. INSTALL REAR DOOR SERVICE HOLE COVER

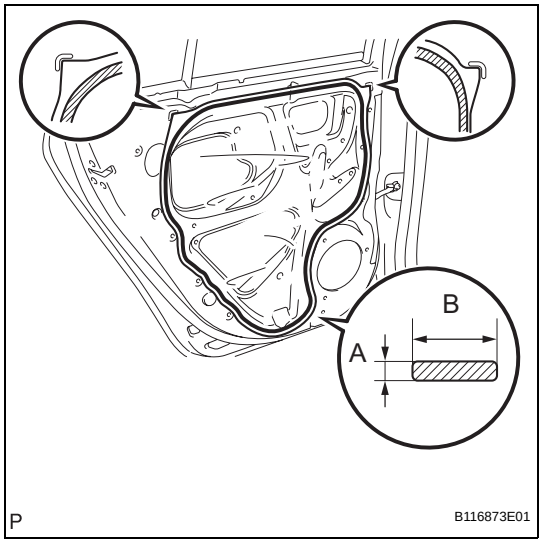

(a) w/ Rear speaker:
Apply butyl tape to the door panel, then install the rear door service hole cover as shown in the illustration.
Adhesive:
Part No. 08850-00065, Butyl Tape Set or the equivalent
Specification

Area	Dimension
A	2.0 mm (0.079 in.) or more
B	6.0 mm (0.236 in.) or more

HINT:
- When installing the service hole cover, pull the links and connectors out through the service hole.
- There should be no wrinkles or folds after attaching the service hole cover.
- After attaching the service hole cover, check the quality of the seal.

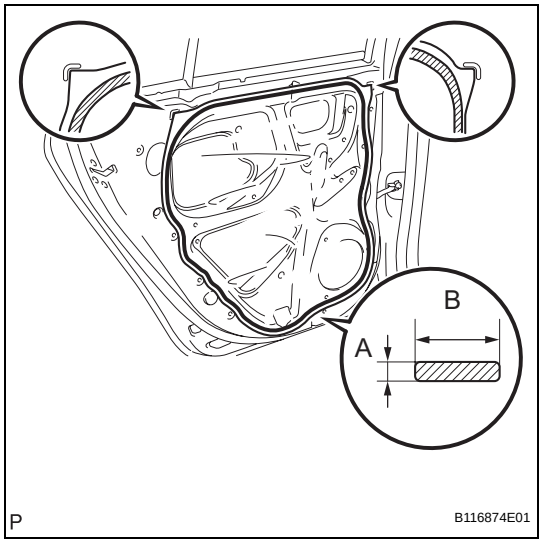

(b) w/o Rear speaker:
Apply butyl tape to the door panel, then install the rear door service hole cover as shown in the illustration.
Adhesive:
Part No. 08850-00065, Butyl Tape Set or the equivalent
Specification

Area	Dimension
A	2.0 mm (0.079 in.) or more
B	6.0 mm (0.236 in.) or more

HINT:
- When installing the service hole cover, pull the links and connectors out through the service hole.
- There should be no wrinkles or folds after attaching the service hole cover.
- After attaching the service hole cover, check the quality of the seal.

16. INSTALL REAR SPEAKER ASSEMBLY (w/ Rear Speaker) (See page AV-178)

17. INSTALL REAR DOOR GLASS WEATHERSTRIP INNER

(a) Install the rear door glass weatherstrip inner onto the rear door trim board.

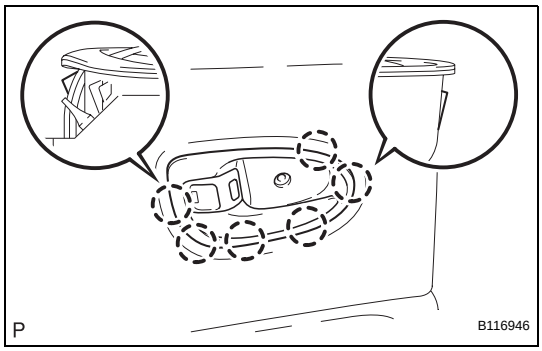

18. INSTALL REAR DOOR INSIDE HANDLE SUB-ASSEMBLY

(a) Engage the 6 claws and install the rear door inside handle.

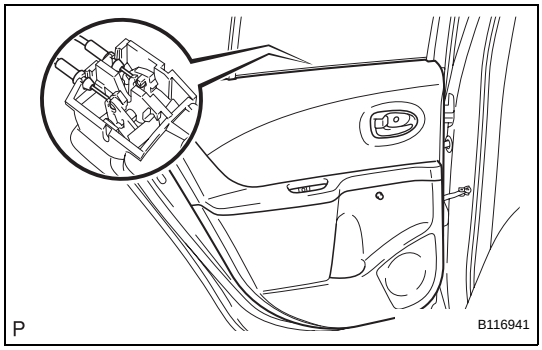

19. INSTALL REAR DOOR TRIM BOARD SUB-ASSEMBLY

(a) Connect the rear door lock remote control cable and rear door inside locking cable.
(b) Connect the connector.

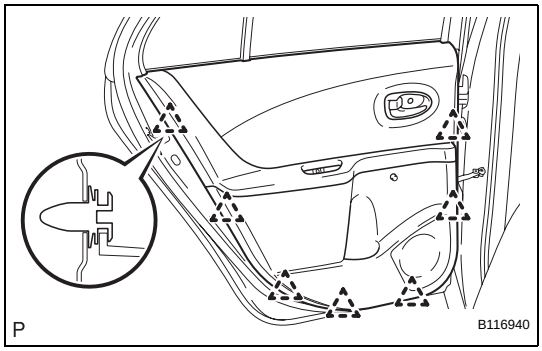

(c) Engage the 7 clips and install the rear door trim board.
(d) Tighten the 2 screws.

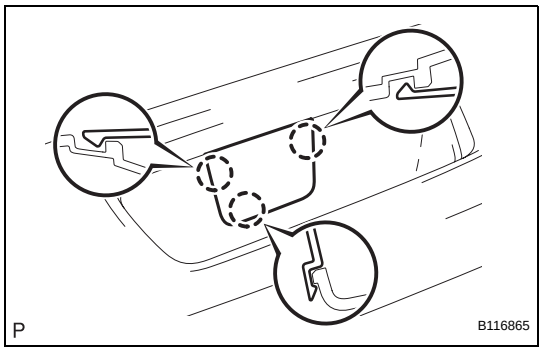

(e) Engage the 3 claws and install the rear door armrest plug.

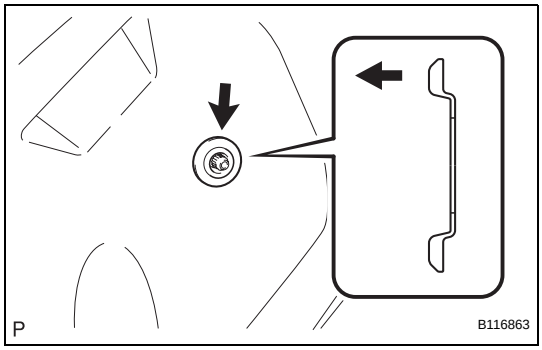

20. INSTALL DOOR WINDOW REGULATOR HANDLE ASSEMBLY

(a) Install the window regulator handle plate.
(b) Open all the windows.

ED

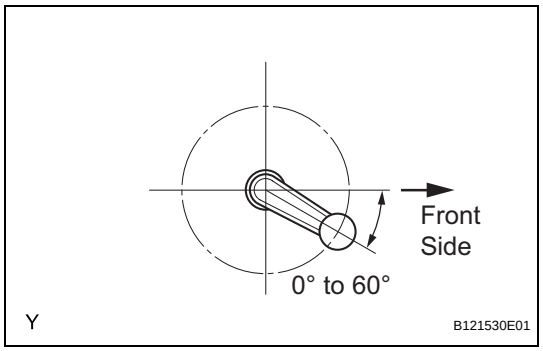

(c) Install the rear door window regulator handle with the clip at the angle shown in the illustration.

21. CONNECT CABLE TO NEGATIVE BATTERY TERMINAL
Torque: 5.4 N*m (55 kgf*cm, 48 in.*lbf)

LUGGAGE COMPARTMENT DOOR (for Sedan)

COMPONENTS

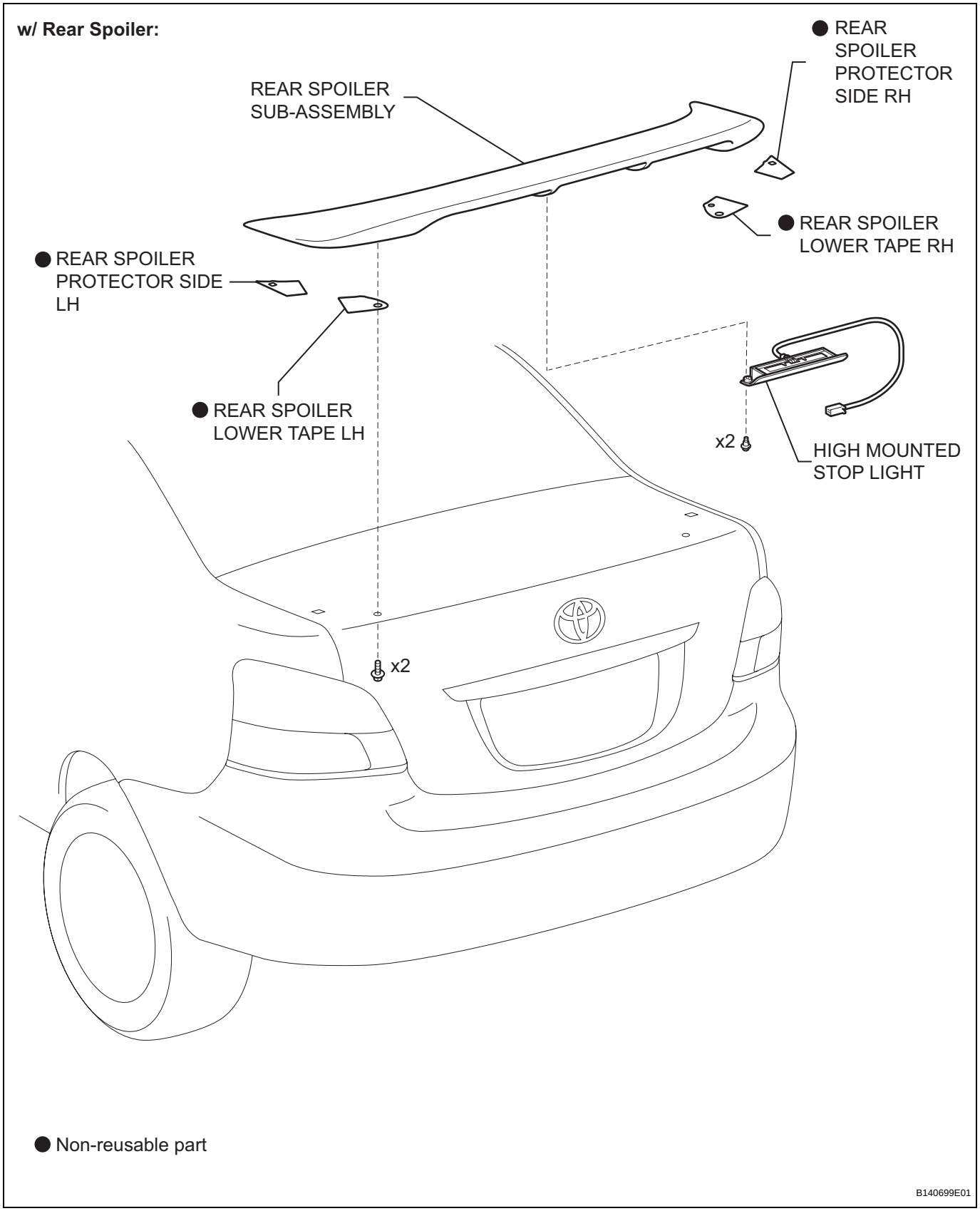

ED

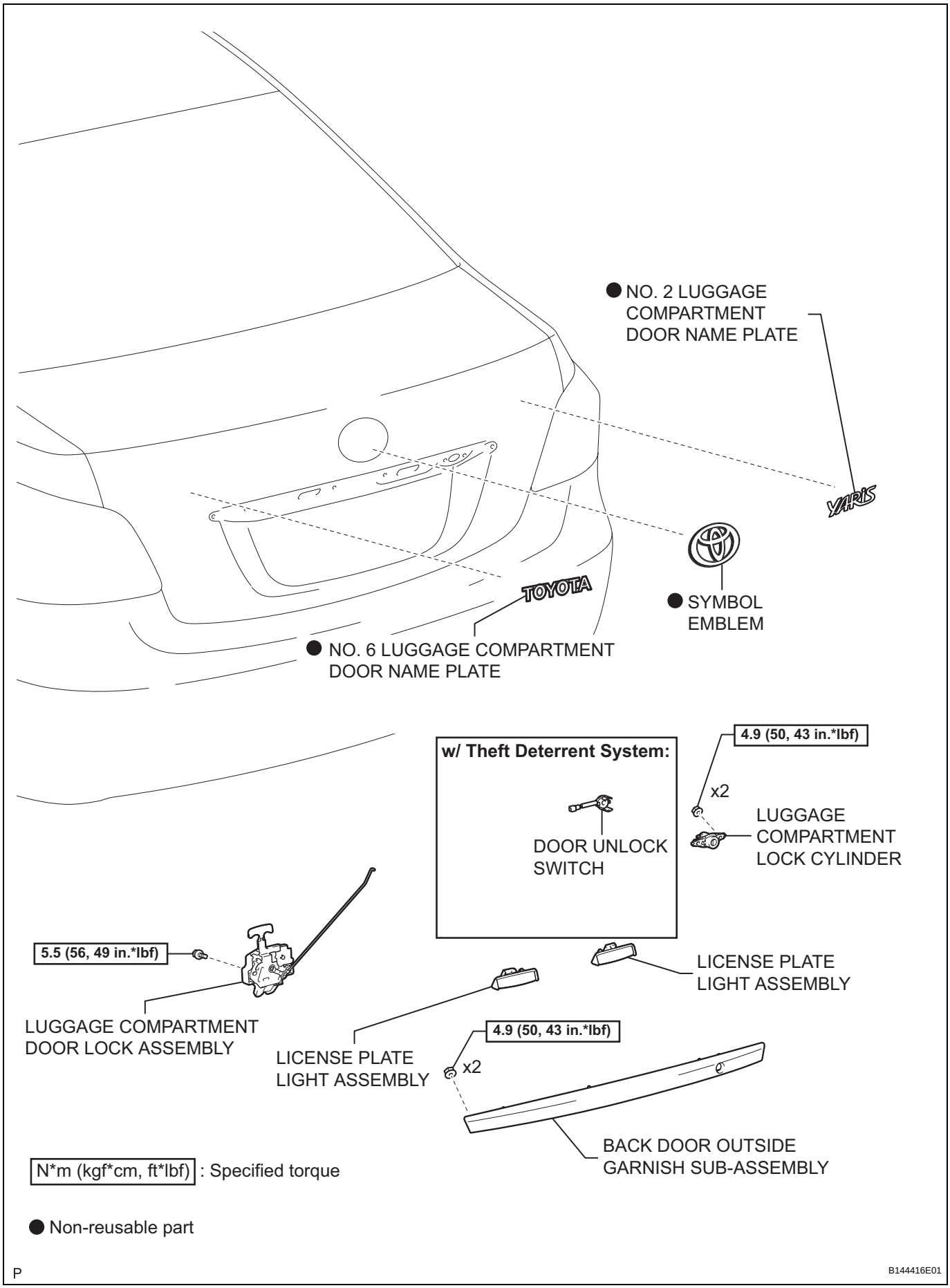
● NO. 2 LUGGAGE COMPARTMENT DOOR NAME PLATE
YARIS
TOYOTA
● SYMBOL EMBLEM
● NO. 6 LUGGAGE COMPARTMENT DOOR NAME PLATE
w/ Theft Deterrent System:
DOOR UNLOCK SWITCH
4.9 (50, 43 in.*lbf)
x2
LUGGAGE COMPARTMENT LOCK CYLINDER
5.5 (56, 49 in.*lbf)
LICENSE PLATE LIGHT ASSEMBLY
LUGGAGE COMPARTMENT DOOR LOCK ASSEMBLY
LICENSE PLATE LIGHT ASSEMBLY
4.9 (50, 43 in.*lbf)
x2
BACK DOOR OUTSIDE GARNISH SUB-ASSEMBLY
N*m (kgf*cm, ft*lbf) : Specified torque
● Non-reusable part
P
B144416E01

ED

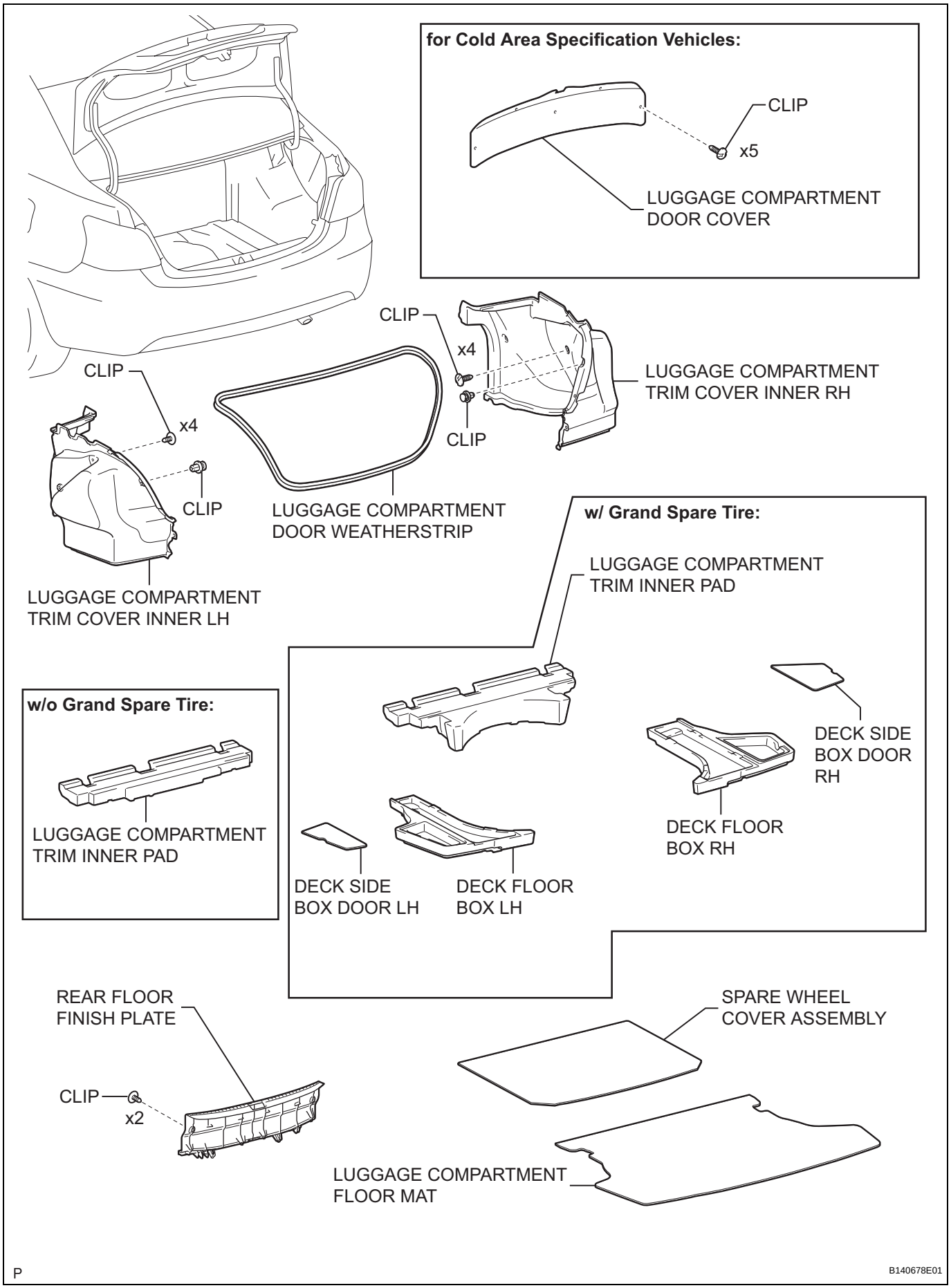
for Cold Area Specification Vehicles:
CLIP
x5
LUGGAGE COMPARTMENT DOOR COVER
CLIP
x4
CLIP
LUGGAGE COMPARTMENT TRIM COVER INNER RH
CLIP
x4
CLIP
LUGGAGE COMPARTMENT DOOR WEATHERSTRIP
LUGGAGE COMPARTMENT TRIM COVER INNER LH
w/ Grand Spare Tire:
LUGGAGE COMPARTMENT TRIM INNER PAD
DECK SIDE BOX DOOR RH
DECK FLOOR BOX RH
DECK SIDE BOX DOOR LH
DECK FLOOR BOX LH
w/o Grand Spare Tire:
LUGGAGE COMPARTMENT TRIM INNER PAD
REAR FLOOR FINISH PLATE
CLIP
x2
SPARE WHEEL COVER ASSEMBLY
LUGGAGE COMPARTMENT FLOOR MAT
P
B140678E01

ED

DISASSEMBLY

1. **DISCONNECT CABLE FROM NEGATIVE BATTERY TERMINAL**

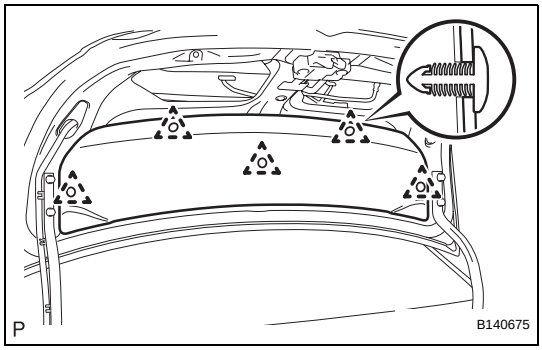

2. **REMOVE LUGGAGE COMPARTMENT DOOR COVER (for Cold Area Specification Vehicles)**
   (a) Disengage the 5 clips and remove the luggage compartment door cover.

3. **REMOVE REAR SPOILER SUB-ASSEMBLY (w/ Rear Spoiler) (See page ET-77)**

4. **REMOVE HIGH MOUNTED STOP LIGHT (w/ Rear Spoiler) (See page ET-78)**

5. **REMOVE LUGGAGE COMPARTMENT DOOR LOCK ASSEMBLY (See page LI-188)**

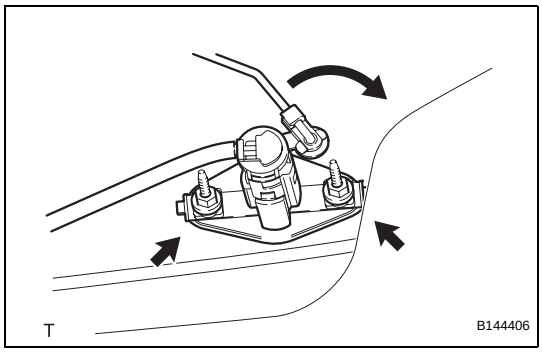

6. **REMOVE LUGGAGE COMPARTMENT LOCK CYLINDER**
   (a) w/ Theft deterrent system:
   Disconnect the connector.
   (b) Disconnect the luggage compartment door lock link, then remove the 2 nuts and the luggage compartment lock cylinder.

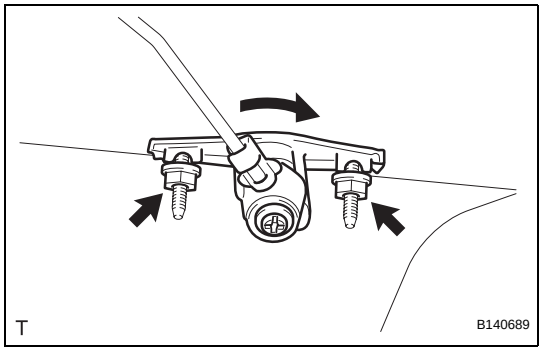

   (c) w/o Theft deterrent system:
   Disconnect the luggage compartment door lock link, then remove the 2 nuts and the luggage compartment lock cylinder.

7. **REMOVE DOOR UNLOCK SWITCH (w/ Theft Deterrent System) (See page TD-56)**

8. **REMOVE BACK DOOR OUTSIDE GARNISH SUB-ASSEMBLY (See page ET-117)**

9. **REMOVE LICENSE PLATE LIGHT ASSEMBLY (See page LI-133)**

10. **REMOVE NO. 6 LUGGAGE COMPARTMENT DOOR NAME PLATE (See page ET-57)**

11. **REMOVE NO. 2 LUGGAGE COMPARTMENT DOOR NAME PLATE (See page ET-57)**

12. **REMOVE SYMBOL EMBLEM (See page ET-58)**

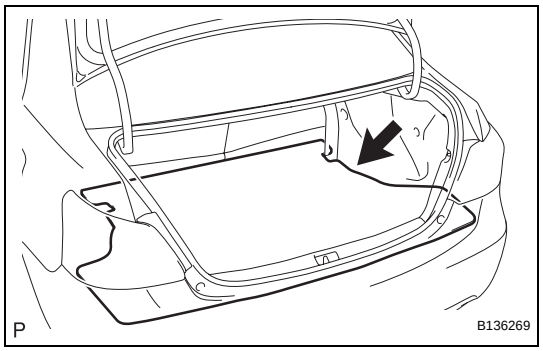

13. REMOVE LUGGAGE COMPARTMENT FLOOR MAT

(a) Remove the luggage compartment floor mat.

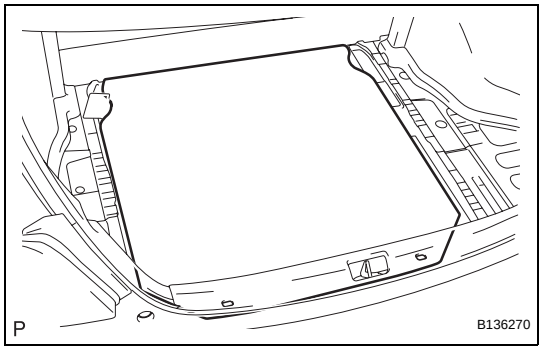

14. REMOVE SPARE WHEEL COVER ASSEMBLY

(a) Remove the spare wheel cover.

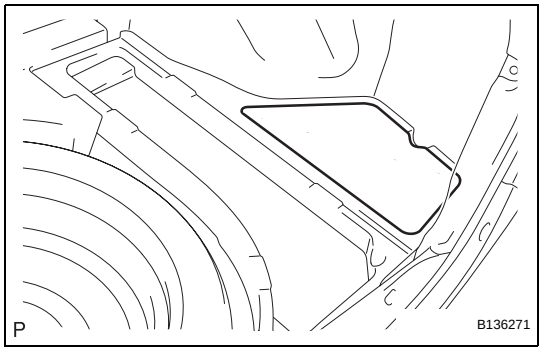

15. REMOVE DECK SIDE BOX DOOR RH (w/ Grand Spare Tire)

(a) Remove the deck side box door RH.

16. REMOVE DECK SIDE BOX DOOR LH (w/ Grand Spare Tire)

HINT:

Use the same procedure as described for the RH side.

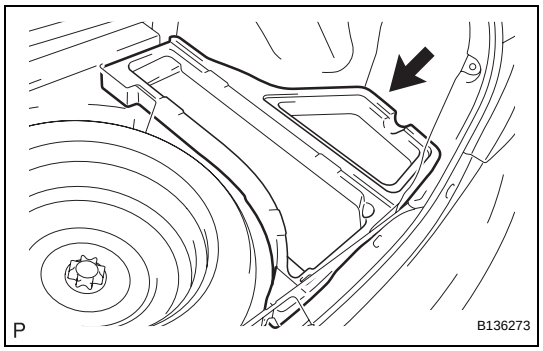

17. REMOVE DECK FLOOR BOX RH (w/ Grand Spare Tire)

(a) Remove the deck floor box RH.

18. REMOVE DECK FLOOR BOX LH (w/ Grand Spare Tire)

HINT:

Use the same procedure as described for the RH side.

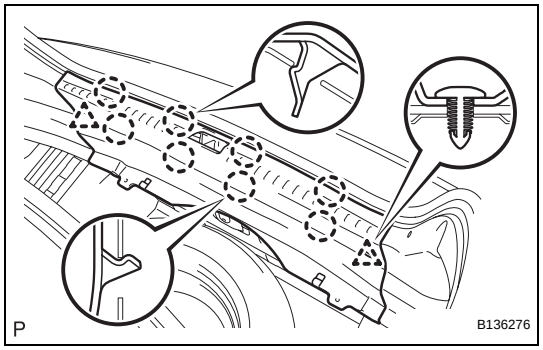

19. REMOVE REAR FLOOR FINISH PLATE

(a) Disengage the 8 claws and 2 clips and remove the rear floor finish plate.

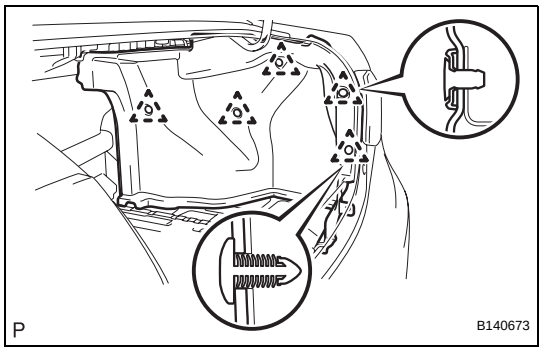

20. REMOVE LUGGAGE COMPARTMENT TRIM COVER INNER RH

(a) Disengage the 5 clips and remove the luggage compartment trim cover inner RH.

21. REMOVE LUGGAGE COMPARTMENT TRIM COVER INNER LH

HINT:
Use the same procedure as described for the RH side.

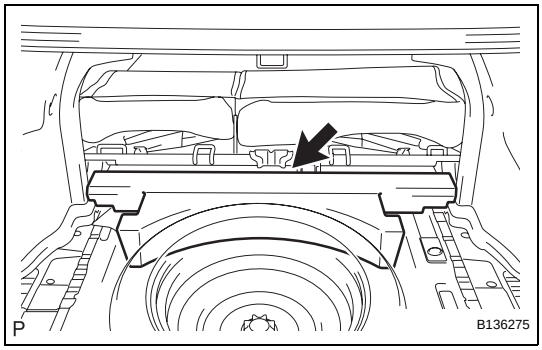

22. REMOVE LUGGAGE COMPARTMENT TRIM INNER PAD

(a) w/ Grand Spare Tire:
Remove the luggage compartment trim inner pad.

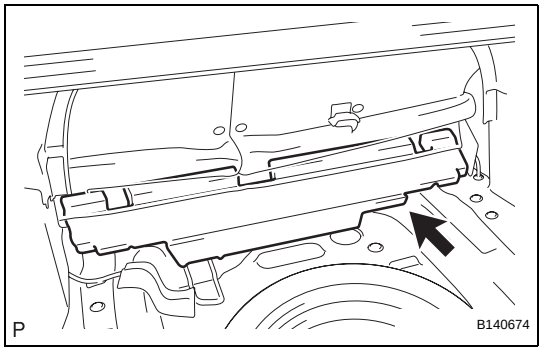

(b) w/o Grand Spare Tire:
Remove the luggage compartment trim inner pad.

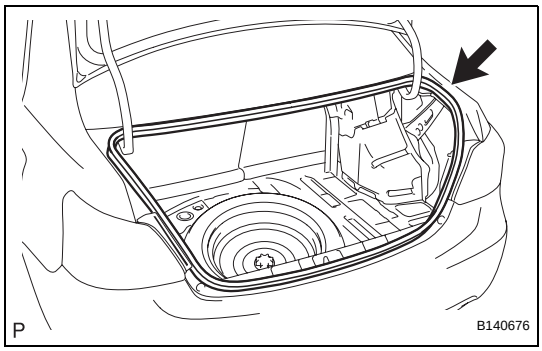

23. REMOVE LUGGAGE COMPARTMENT DOOR WEATHERSTRIP

(a) Remove the luggage compartment door weatherstrip.

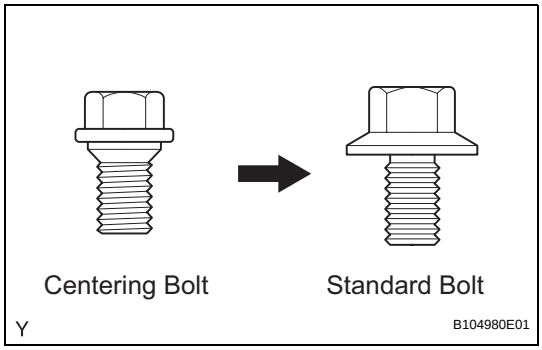

ADJUSTMENT

HINT:

- Centering bolts are used to mount the door hinge onto the vehicle body and door. The door cannot be adjusted with the centering bolts on. Substitute standard bolts (with washers) for the centering bolts when making adjustments.
- For bolts without torque specifications, check the standard bolt chart (see page SS-2).

1. INSPECT LUGGAGE COMPARTMENT DOOR

(a) Check that the clearance measurements are within the standard ranges.

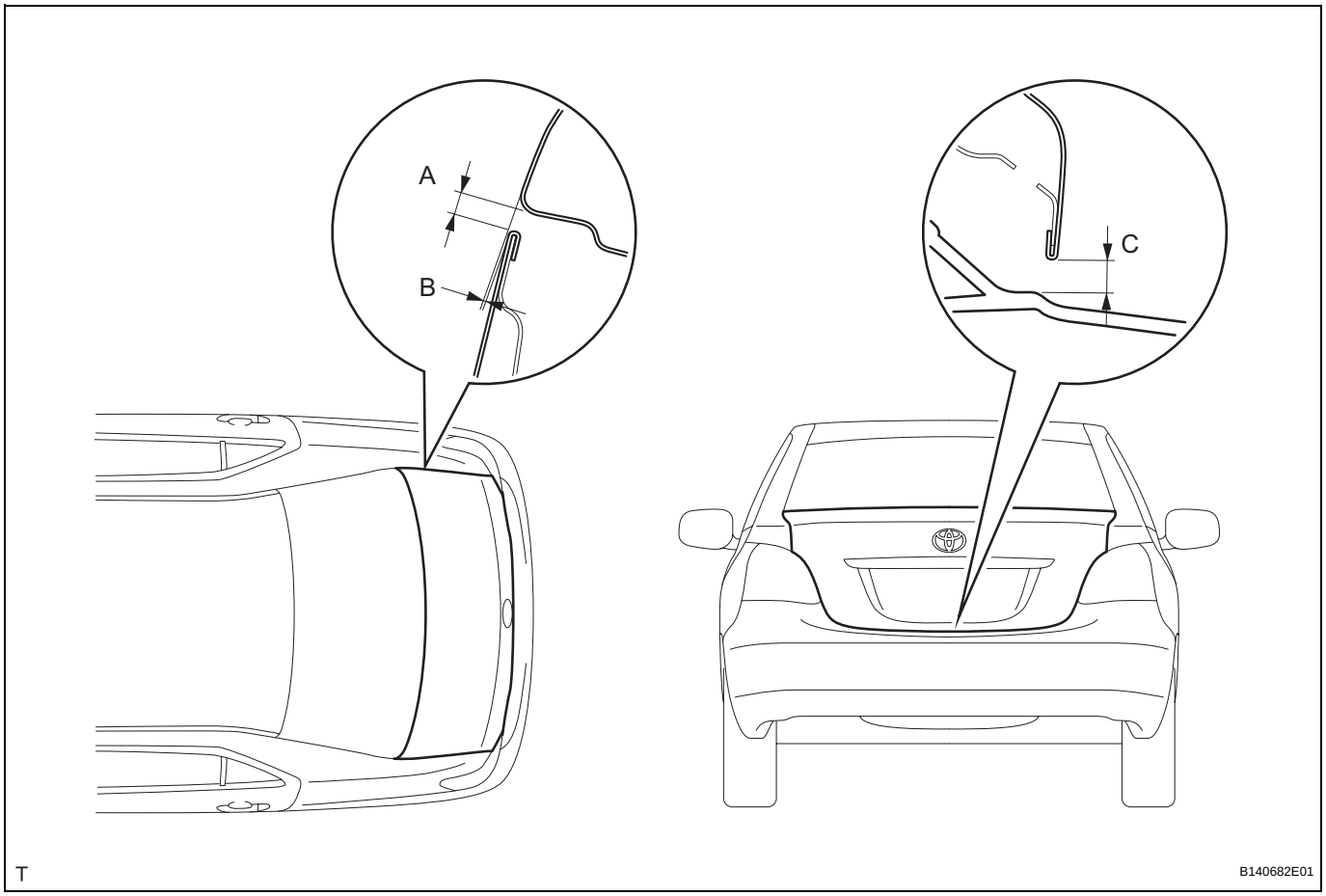

Standard

Area	Measurement	Area	Measurement
A	2.6 to 5.6 mm (0.102 to 0.220 in.)	C	6.45 mm (0.254 in.)
B	-0.6 to 1.4 mm (-0.023 to 0.055 in.)	-	-

2. REMOVE REAR FLOOR FINISH PLATE (See page ED-133)

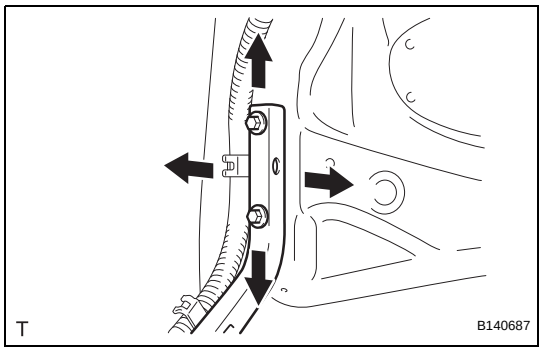

3. ADJUST LUGGAGE COMPARTMENT DOOR

(a) Adjust the door position.

(1) Horizontally and vertically adjust the door by loosening the door side hinge bolts.
Torque: 7.0 N*m (71 kgf*cm, 62 in.*lbf)

ED

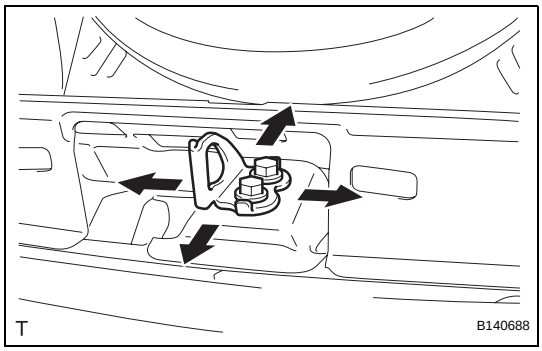

(b) Adjust the striker position.
  (1) Adjust the striker position by slightly loosening the striker mounting bolts and hitting the striker with a plastic hammer.
  (2) Tighten the striker mounting bolts after the adjustment.
  Torque: 5.5 N*m (56 kgf*cm, 49 in.*lbf)

4. INSTALL REAR FLOOR FINISH PLATE (See page ED-137)

INSTALLATION

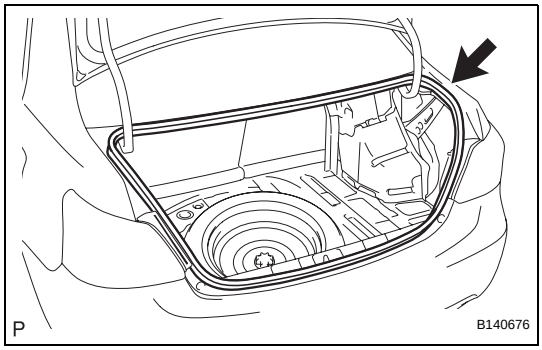

1. INSTALL LUGGAGE COMPARTMENT DOOR WEATHERSTRIP

(a) Install the luggage compartment door weatherstrip.

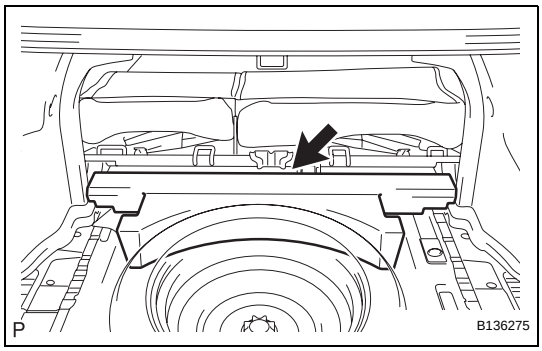

2. INSTALL LUGGAGE COMPARTMENT TRIM INNER PAD

(a) w/ Grand Spare Tire:
Install the luggage compartment trim inner pad.

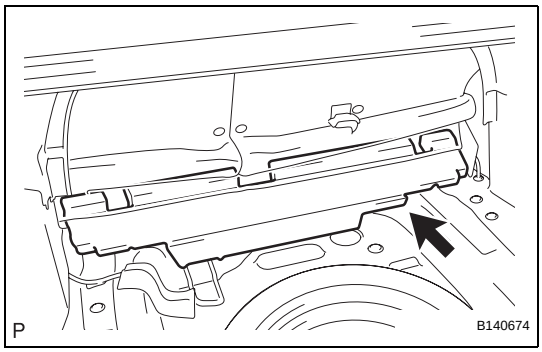

(b) w/o Grand Spare Tire:
Install the luggage compartment trim inner pad.

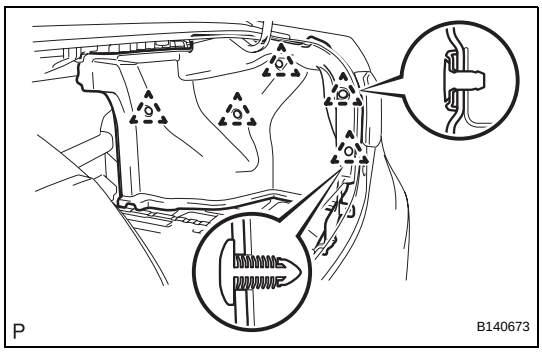

3. INSTALL LUGGAGE COMPARTMENT TRIM COVER INNER RH

(a) Engage the 5 clips and install the luggage compartment trim cover inner RH.

4. INSTALL LUGGAGE COMPARTMENT TRIM COVER INNER LH

HINT:
Use the same procedure as described for the RH side.

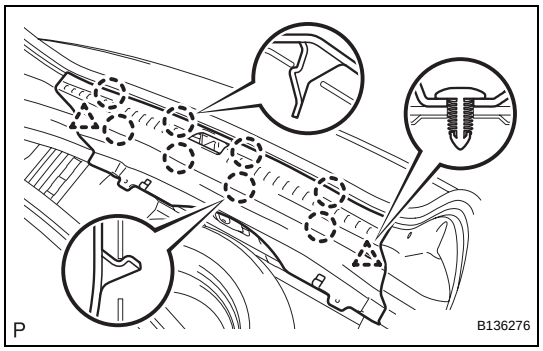

5. INSTALL REAR FLOOR FINISH PLATE

(a) Engage the 8 claws and 2 clips and install the rear floor finish plate.

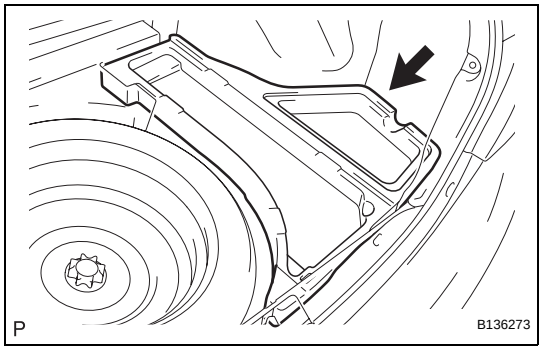

6. INSTALL DECK FLOOR BOX RH (w/ Grand Spare Tire)

(a) Install the deck floor box RH.

7. INSTALL DECK FLOOR BOX LH (w/ Grand Spare Tire)

HINT:
Use the same procedure as described for the RH side.

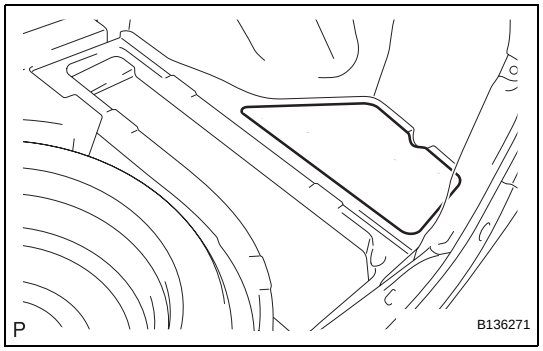

8. INSTALL DECK SIDE BOX DOOR RH (w/ Grand Spare Tire)

(a) Install the deck floor box RH.

9. INSTALL DECK SIDE BOX DOOR LH (w/ Grand Spare Tire)

HINT:
Use the same procedure as described for the RH side.

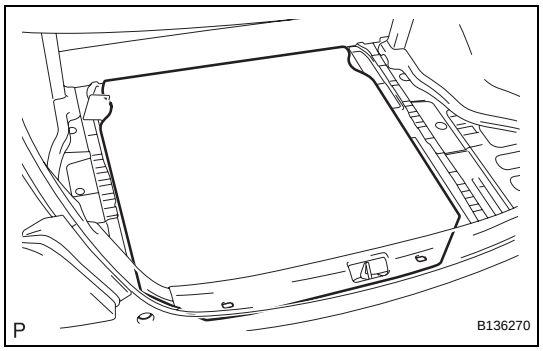

10. INSTALL SPARE WHEEL COVER ASSEMBLY

(a) Install the spare wheel cover.

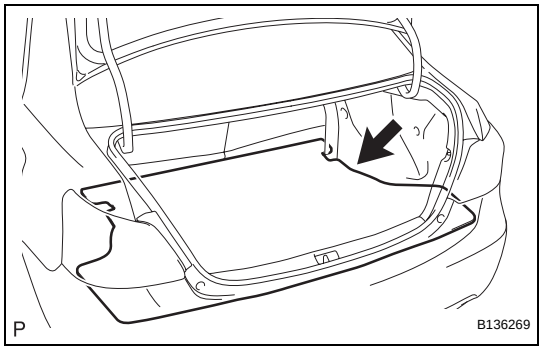

11. INSTALL LUGGAGE COMPARTMENT FLOOR MAT

(a) Install the luggage compartment floor mat.

12. INSTALL SYMBOL EMBLEM (See page ET-58)

13. INSTALL NO. 2 LUGGAGE COMPARTMENT DOOR NAME PLATE (See page ET-59)

14. INSTALL NO. 6 LUGGAGE COMPARTMENT DOOR NAME PLATE (See page ET-60)

15. INSTALL LICENSE PLATE LIGHT ASSEMBLY (See page LI-134)

16. INSTALL BACK DOOR OUTSIDE GARNISH SUB-ASSEMBLY (See page ET-117)

17. INSTALL DOOR UNLOCK SWITCH (w/ Theft Deterrent System) (See page TD-56)

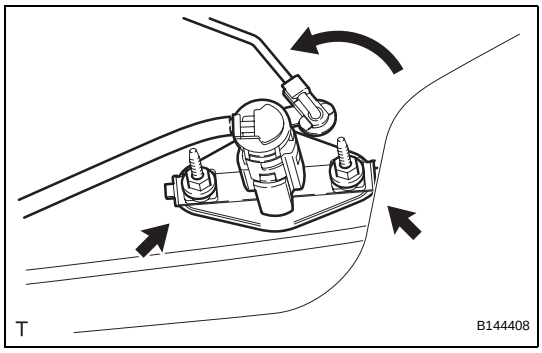

18. INSTALL LUGGAGE COMPARTMENT LOCK CYLINDER

(a) w/ Theft deterrent system:
Install the luggage compartment lock cylinder with the 2 nuts.
Torque: 4.9 N*m (50 kgf*cm, 43 in.*lbf)

(b) Connect the luggage compartment door lock link and connector.

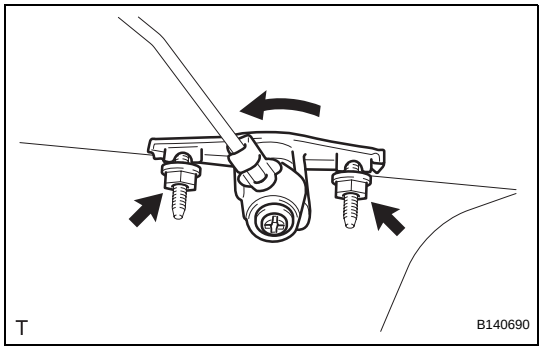

(c) w/o Theft deterrent system:
Install the luggage compartment lock cylinder with the 2 nuts.
Torque: 4.9 N*m (50 kgf*cm, 43 in.*lbf)

(d) Connect the luggage compartment door lock link.

19. INSTALL LUGGAGE COMPARTMENT DOOR LOCK ASSEMBLY (See page LI-189)

20. INSTALL HIGH MOUNTED STOP LIGHT (w/ Rear Spoiler) (See page ET-78)

21. INSTALL REAR SPOILER PROTECTOR SIDE LH (w/ Rear Spoiler) (See page ET-78)

22. INSTALL REAR SPOILER PROTECTOR SIDE RH (w/ Rear Spoiler) (See page ET-78)

23. INSTALL REAR SPOILER SUB-ASSEMBLY (w/ Rear Spoiler) (See page ET-78)

ED

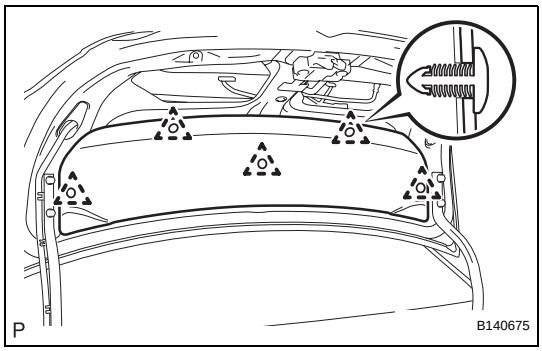

24. INSTALL LUGGAGE COMPARTMENT DOOR COVER (for Cold Area Specification Vehicles)

(a) Engage the 5 clips and install the luggage compartment door cover.

25. CONNECT CABLE TO NEGATIVE BATTERY TERMINAL
Torque: 5.4 N*m (55 kgf*cm, 48 in.*lbf)

BACK DOOR (for Hatchback)

COMPONENTS

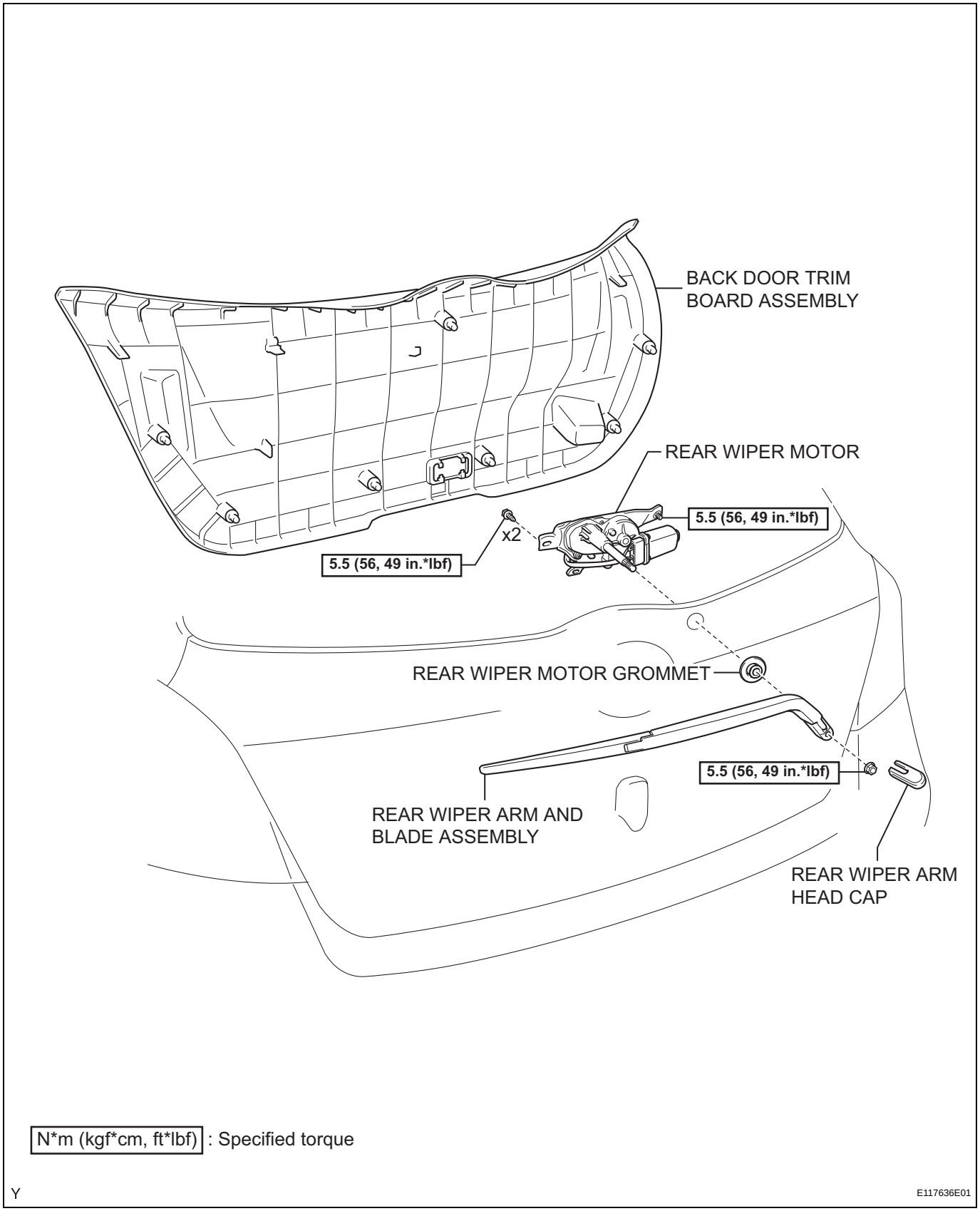

ED

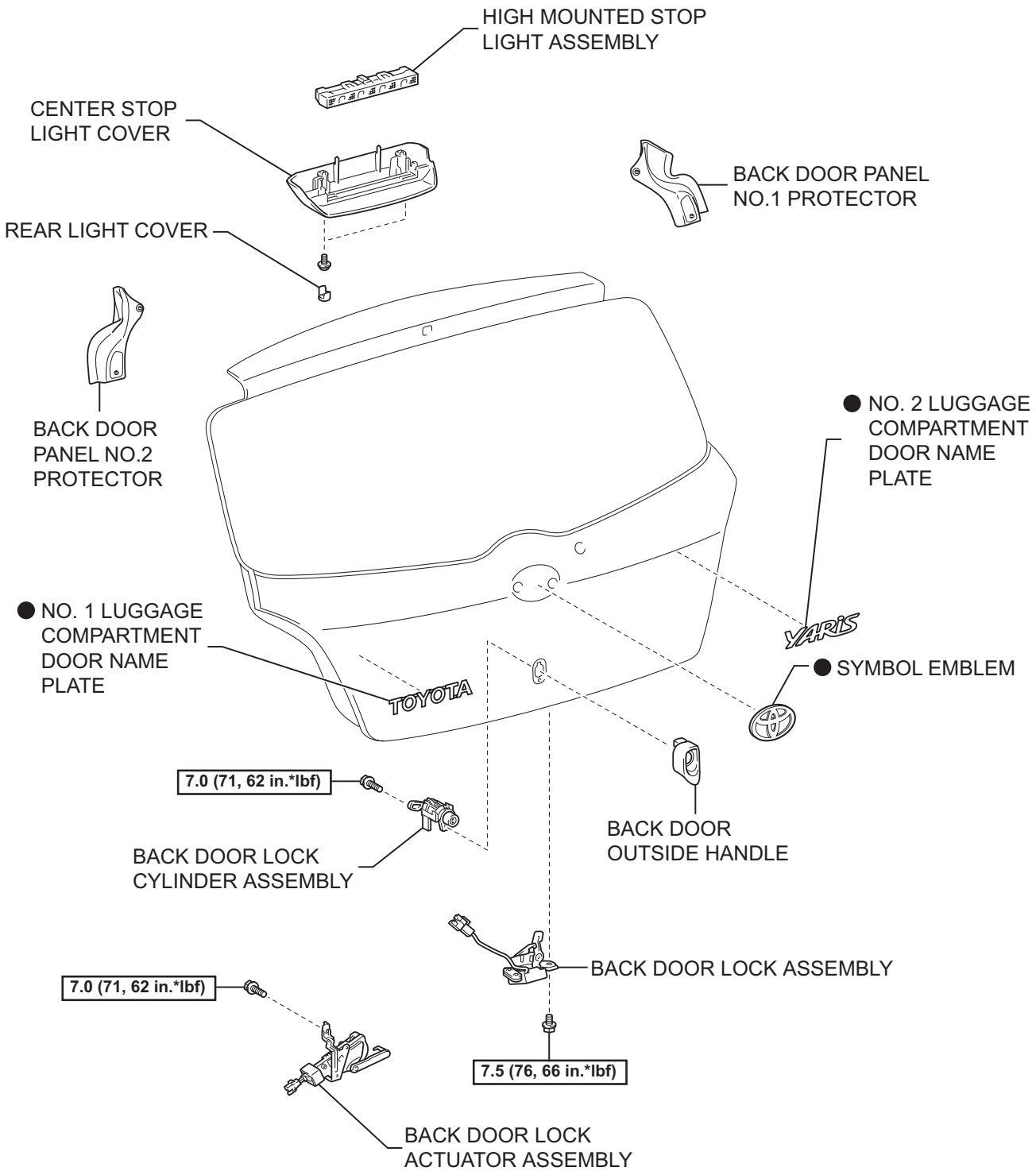

N*m (kgf*cm, ft*lbf) : Specified torque

● Non-reusable part

Y

B121538E01

ED

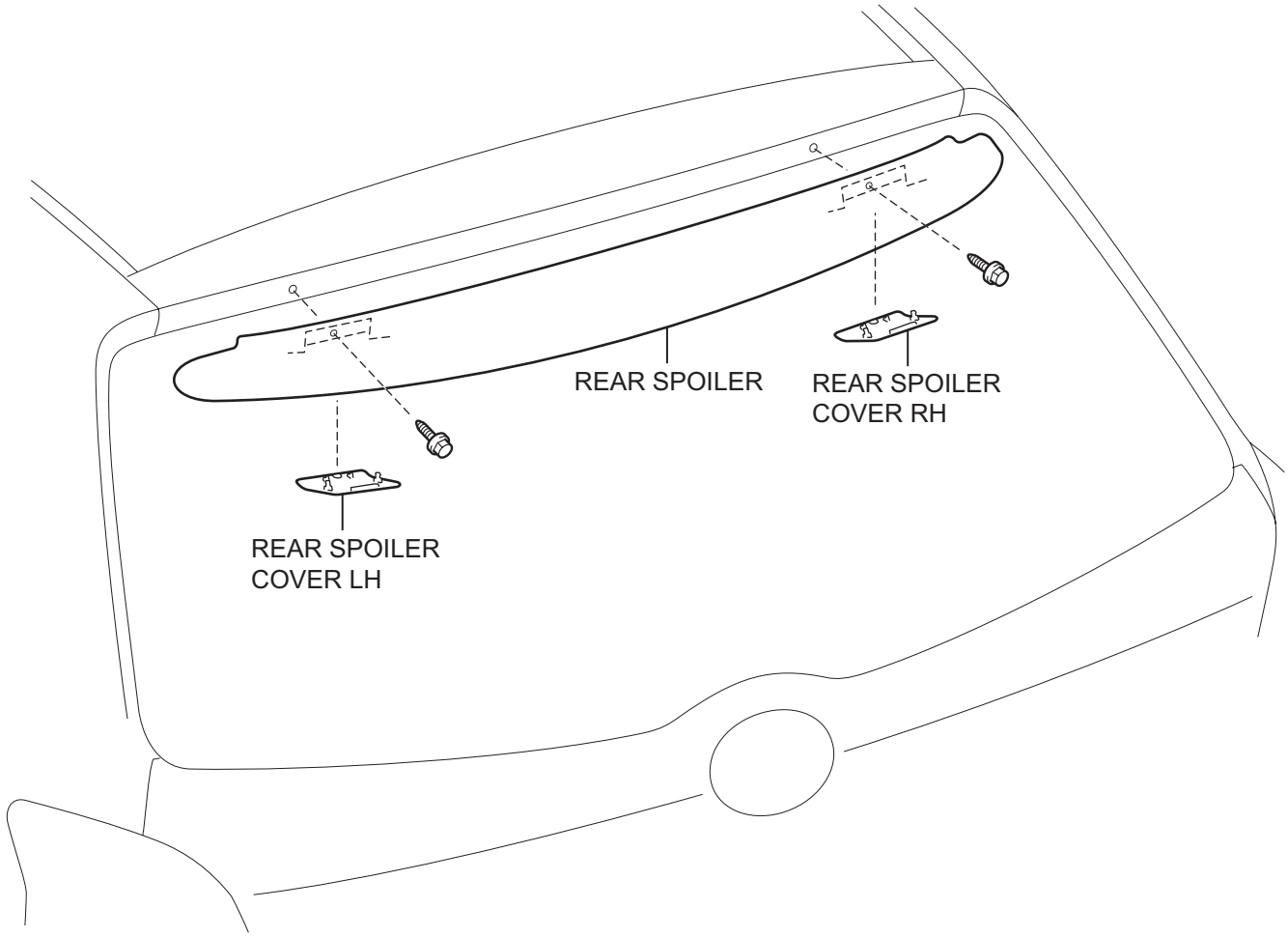

T

B117717E03

DISASSEMBLY

1. **DISCONNECT CABLE FROM NEGATIVE BATTERY TERMINAL**
2. **REMOVE CENTER STOP LIGHT COVER (See page LI-144)**
3. **REMOVE HIGH MOUNTED STOP LIGHT ASSEMBLY (See page LI-144)**
4. **REMOVE BACK DOOR TRIM BOARD ASSEMBLY**
   (a) Using a screwdriver with its tip wrapped in protective tape, slide the handle plate of the back door trim board to disengage it.

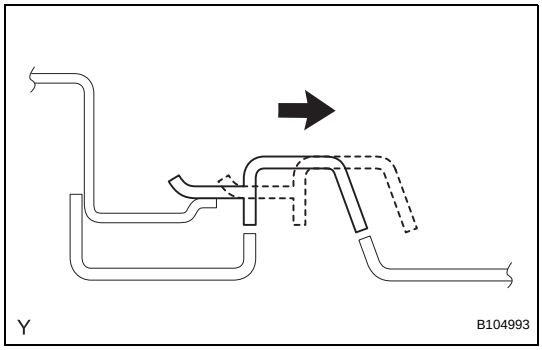

   (b) Disengage the 3 claws and 9 clips and remove the back door trim board.

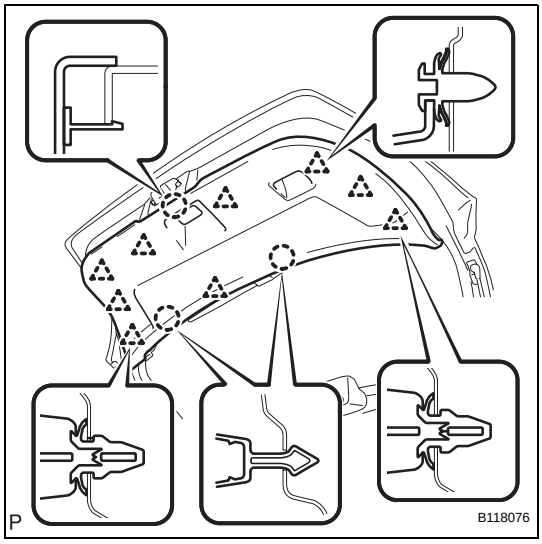

5. **REMOVE REAR WIPER ARM AND BLADE ASSEMBLY (See page WW-28)**
6. **REMOVE REAR WIPER MOTOR GROMMET (See page WW-28)**
7. **REMOVE REAR WIPER MOTOR (See page WW-29)**

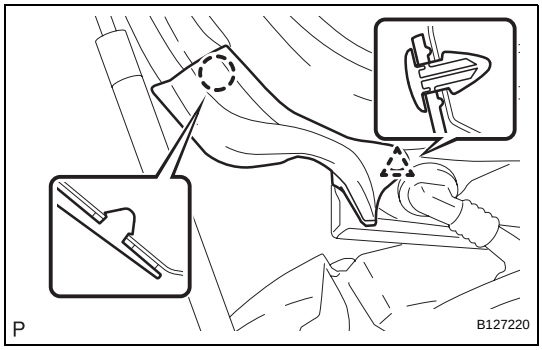

8. **REMOVE BACK DOOR PANEL NO.2 PROTECTOR**
   (a) Disengage the claw and clip, then remove back door panel protector No. 2.
   NOTICE:
   Remove any tape remaining on the back door side.
9. **REMOVE BACK DOOR PANEL NO.1 PROTECTOR**
   HINT:
   Use the same procedure as described for the No. 2 side.
10. **REMOVE BACK DOOR LOCK ASSEMBLY (See page DL-152)**

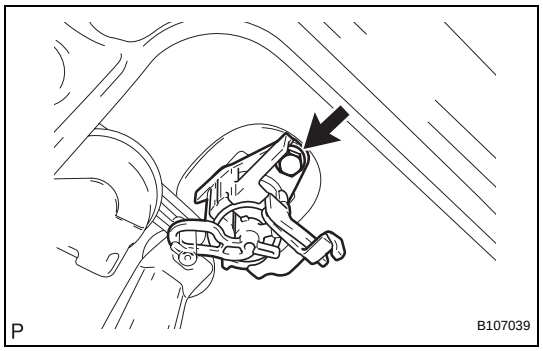

11. REMOVE BACK DOOR LOCK CYLINDER ASSEMBLY

(a) Remove the bolt and back door lock cylinder assembly.

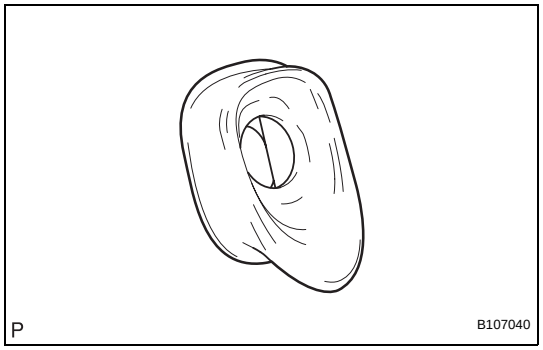

12. REMOVE BACK DOOR OUTSIDE HANDLE

(a) Remove the back door outside handle from the back door panel.

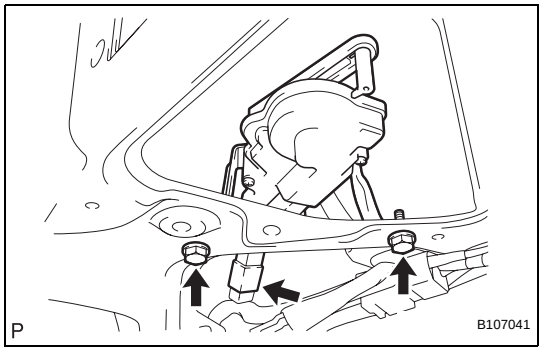

13. REMOVE BACK DOOR LOCK ACTUATOR ASSEMBLY

(a) Disconnect the connector.

(b) Remove the 2 bolts and the back door lock actuator.

14. REMOVE REAR SPOILER COVER LH (See page ET-81)

15. REMOVE REAR SPOILER COVER RH (See page ET-81)

16. REMOVE REAR SPOILER (See page ET-81)

17. REMOVE NO. 1 LUGGAGE COMPARTMENT DOOR NAME PLATE (See page ET-68)

18. REMOVE NO. 2 LUGGAGE COMPARTMENT DOOR NAME PLATE (See page ET-69)

19. REMOVE SYMBOL EMBLEM (See page ET-68)

ADJUSTMENT

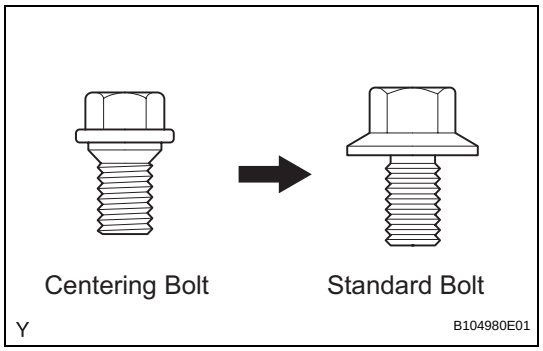

HINT:

- Centering bolts are used to mount the door hinge onto the vehicle body and door. The door cannot be adjusted with the centering bolts on. Substitute standard bolts (with washers) for the centering bolts when making adjustments.
- For bolts without torque specifications, check the standard bolt chart.

ED

1. INSPECT BACK DOOR

(a) Check that the clearance measurements are within the standard ranges.

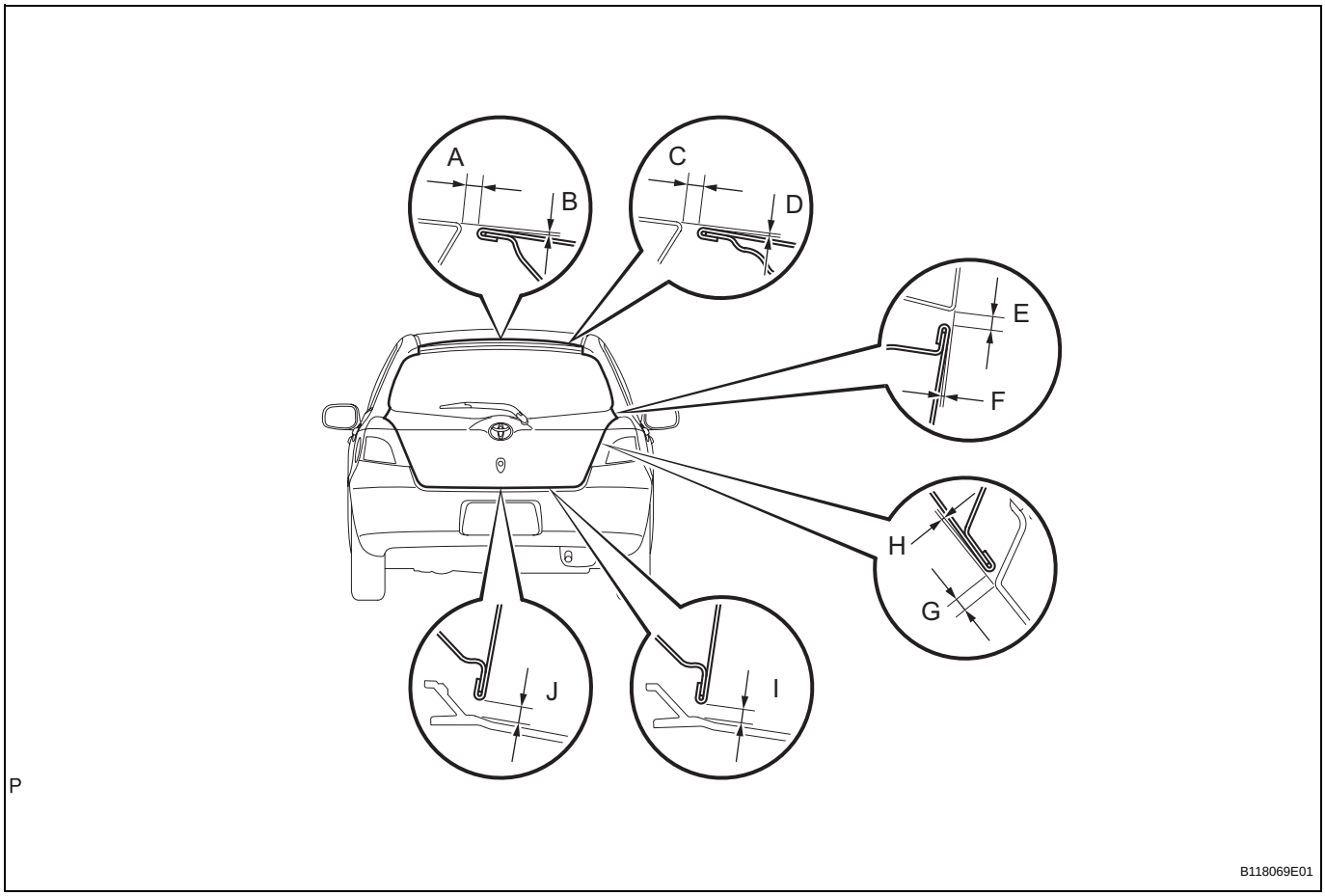

Standard

Area	Measurement	Area	Measurement
A	4.5 to 7.5 mm (0.177 to 0.295 in.)	F	-1.5 to 1.5 mm (-0.059 to 0.059 in.)
B	-0.5 to 2.5 mm (-0.020 to 0.098 in.)	G	3.05 to 7.05 mm (0.120 to 0.278 in.)
C	4.5 to 7.5mm (0.177 to 0.295 in.)	H	-1.5 to 1.5 mm (-0.059 to 0.059 in.)
D	-0.6 to 2.4 mm (-0.024 to 0.094 in.)	I	4.05 to 8.05 mm (0.159 to 0.317 in.)
E	3.6 to 6.6 mm (0.142 to 0.260 in.)	J	4.15 to 8.15 mm (0.163 to 0.321 in.)

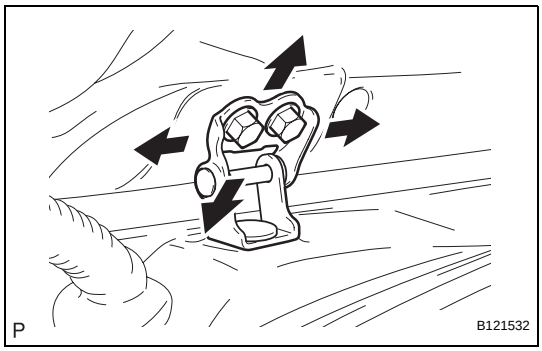

2. ADJUST BACK DOOR

(a) Adjust the door position.

(1) Horizontally and vertically adjust the door by loosening the door side hinge bolts.
Torque: 12 N*m (122 kgf*cm, 8.9 ft.*lbf)

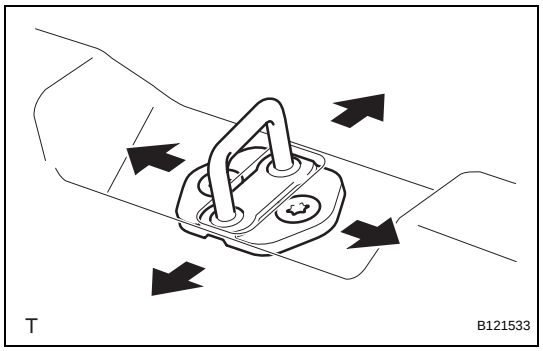

(b) Adjust the striker position.
  (1) Adjust the striker position by slightly loosening the striker mounting bolts and hitting the striker with a plastic hammer.
  (2) Tighten the striker mounting bolts after the adjustment.
  Torque: 12 N*m (122 kgf*cm, 8.9 in.*lbf)

REASSEMBLY

1. **INSTALL SYMBOL EMBLEM (See page ET-72)**
2. **INSTALL NO. 2 LUGGAGE COMPARTMENT DOOR NAME PLATE (See page ET-70)**
3. **INSTALL NO. 1 LUGGAGE COMPARTMENT DOOR NAME PLATE (See page ET-71)**
4. **INSTALL REAR SPOILER (See page ET-81)**
5. **INSTALL REAR SPOILER COVER LH (See page ET-82)**
6. **INSTALL REAR SPOILER COVER RH (See page ET-82)**
7. **INSTALL BACK DOOR LOCK ACTUATOR ASSEMBLY**
   (a) Install the back door lock actuator with the 2 bolts.
   Torque: 7.0 N*m (71 kgf*cm, 62 in.*lbf)
   (b) Connect the connector.

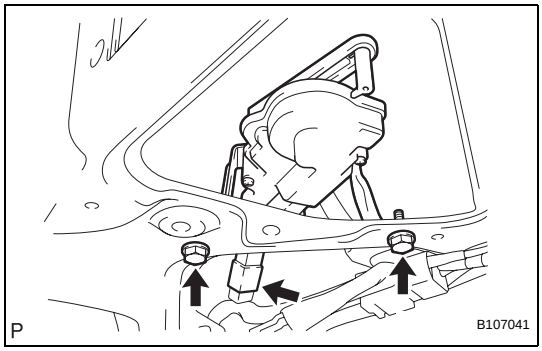

8. **INSTALL BACK DOOR OUTSIDE HANDLE**
   (a) Install the back door outside handle onto the back door panel.

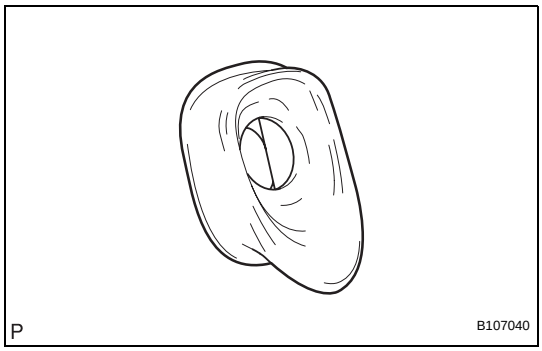

9. **INSTALL BACK DOOR LOCK CYLINDER ASSEMBLY**
   (a) Install back door lock cylinder with the bolt.
   Torque: 7.0 N*m (71 kgf*cm, 62 in.*lbf)
10. **INSTALL BACK DOOR LOCK ASSEMBLY (See page DL-153)**

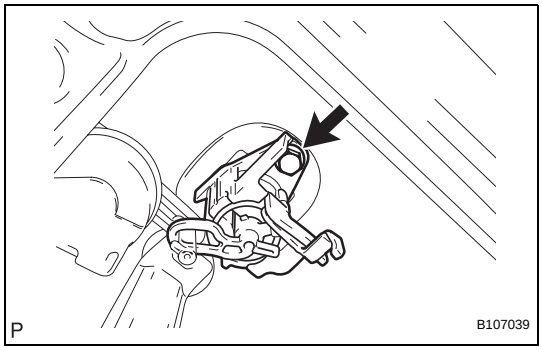

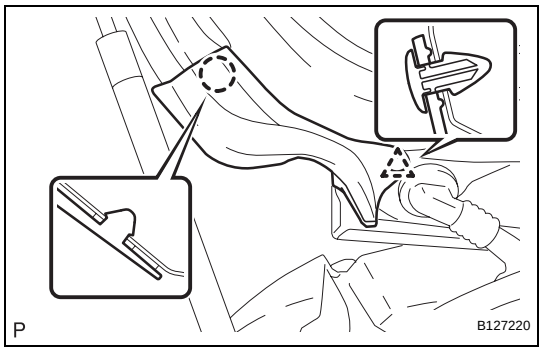

11. INSTALL BACK DOOR PANEL NO.2 PROTECTOR

(a) Apply Primer G to the installation part of back door panel protector No. 2.

NOTICE:

- **Allow the primer to dry for 3 minutes or more.**
- **Throw away any leftover Primer G.**
- **Do not apply too much Primer G.**

(b) Engage the claw and clip and install the protector onto the back door panel, as shown in the illustration.

12. INSTALL BACK DOOR PANEL NO.1 PROTECTOR

HINT:

Use the same procedure as described for the No. 2 side.

13. INSTALL REAR WIPER MOTOR (See page WW-29)

14. INSTALL REAR WIPER MOTOR GROMMET (See page WW-29)

15. INSTALL REAR WIPER ARM AND BLADE ASSEMBLY (See page WW-30)

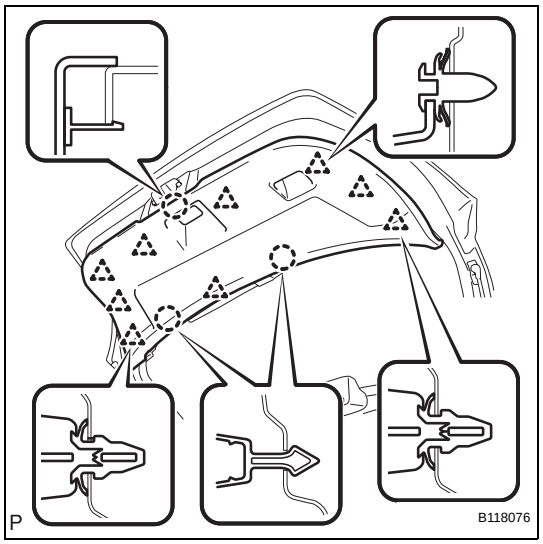

16. INSTALL BACK DOOR TRIM BOARD ASSEMBLY

(a) Engage the 3 claws and 9 clips and install the back door trim board.

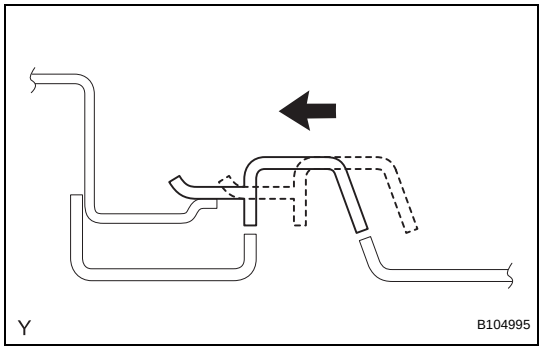

(b) Slide the handle plate of the back door trim board to engage it.

17. INSTALL HIGH MOUNTED STOP LIGHT ASSEMBLY (See page LI-145)

18. INSTALL CENTER STOP LIGHT COVER (See page LI-145)

19. CONNECT CABLE TO NEGATIVE BATTERY TERMINAL

Torque: 5.4 N*m (55 kgf*cm, 48 in.*lbf)

BACK DOOR SUPPORT (for Hatchback)

COMPONENTS

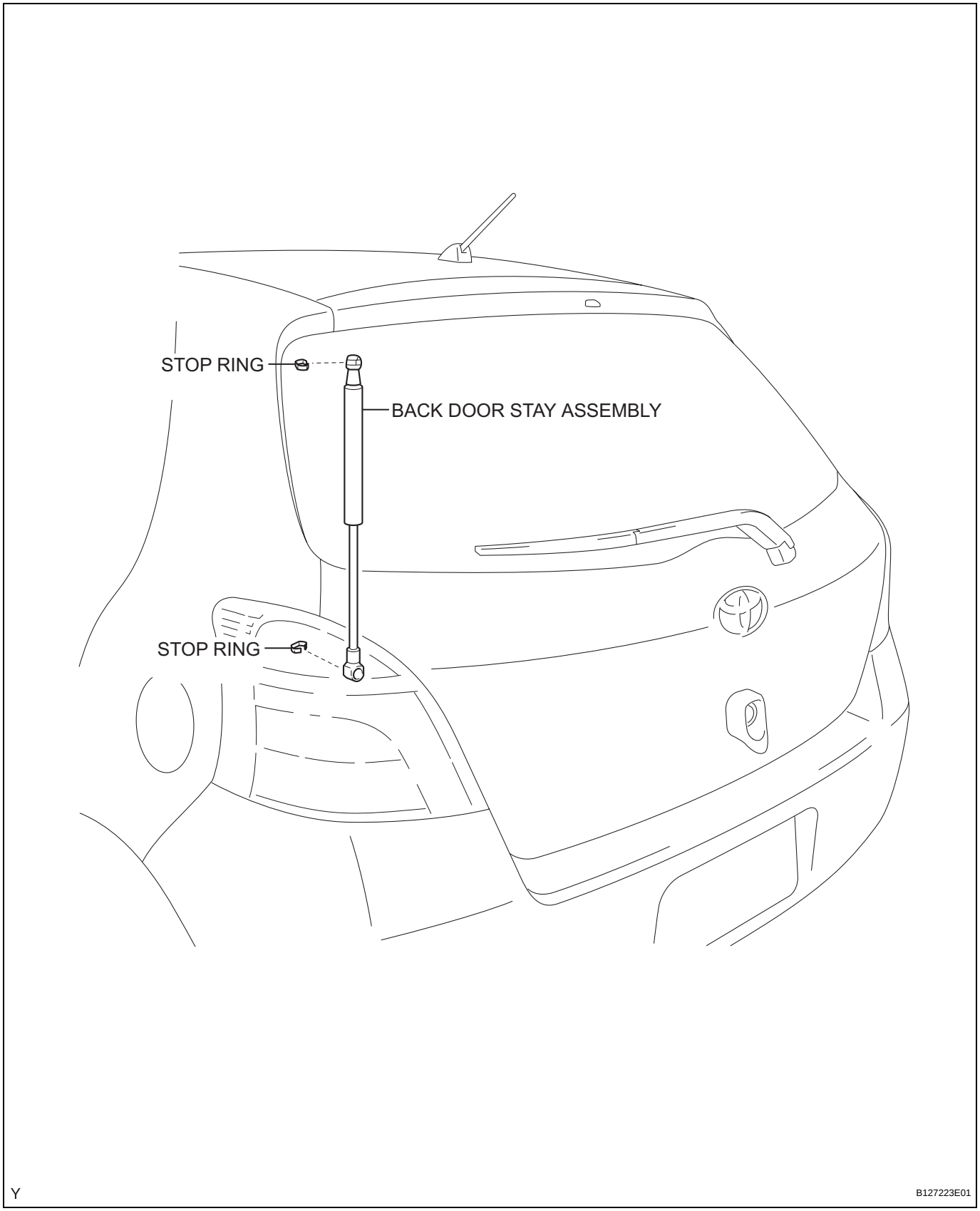

REMOVAL

HINT:
- Use the same procedure for both the RH and LH sides.
- The procedure described below is for the LH side.

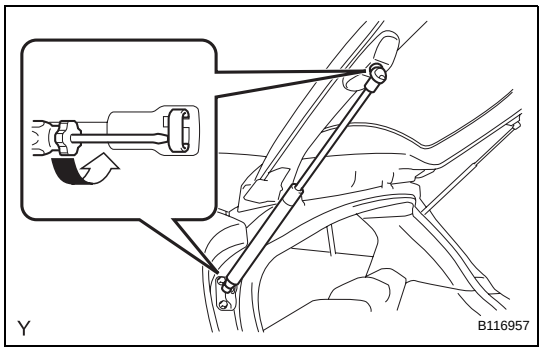

1. REMOVE BACK DOOR STAY ASSEMBLY

(a) Using a screwdriver with its wrapped in protective tape, remove the 2 stop rings and stay.

NOTICE:
- **Do not touch the rod of the stay with gloves to avoid fibers from adhering.**
- **When foreign matter adheres to the rod, it prevents the rod from moving smoothly and reduces its holding power.**

HINT:
Support the back door by hand while removing the door stay.

INSTALLATION

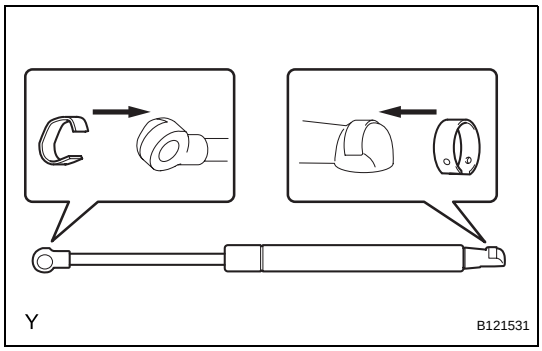

1. INSTALL BACK DOOR STAY ASSEMBLY

(a) Install the 2 stop rings onto the stay.

(b) Install the stay.

DISPOSAL

HINT:
- Use the same procedure for both the RH and LH sides.
- The procedure described below is for the LH side.

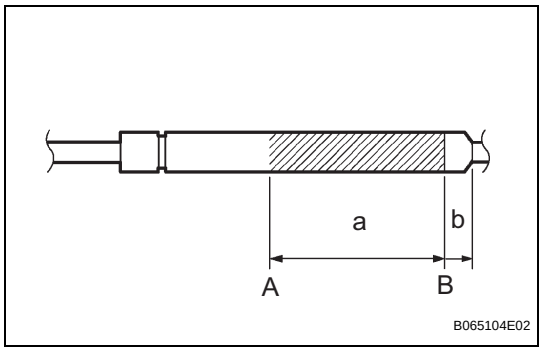

1. DISPOSE OF BACK DOOR STAY ASSEMBLY

(a) Horizontally fix the stay in a vise with the piston-rod pulled out.

(b) Wearing protective glasses, gradually cut the shaded part between A and B, shown in the illustration, using a metal saw to gradually release the gas.

Specification

Area	Measurement
a	80 mm (3.15 in.)
b	20 mm (0.80 in.)

CAUTION:
- **Cover the area that is being cut with a shop rag or a piece of cloth because there is a possibility that metal shards may be dispersed by the gas.**
- **The gas is colorless, odorless and harmless.**