61 25 ... Assessing the transport capability of cell block in service workshops

Warning!

High-voltage system - danger to life!

The following points must be strictly observed **prior to starting work**:

- Safety information for handling electric / hybrid vehicles.
- Visual check of the high-voltage battery unit following an accident

Initiating:

For analysis and disposal purposes, it is necessary to transport an already used cell module. These lithium-ion based cell blocks are to be classified as hazardous material according to UN 38.3, and may only be transported under particular prerequisites.

Obtaining the certified transportability between the assessment and delivery of the cell block to the disposal / transportation company is the responsibility of a qualified person. For shipping one also needs to take into account the influence of the storage requirements and other possible occurring events for the determined transportability.

The transport in the sense of the hazardous goods legislation is organised in three areas:

1. Assessment of the transportability
2. Transport preparation
3. Performing the transport

This document contains all the necessary information in order to assess the transportability of a used cell block. The transport preparation and execution is **not** an element of this document.

Further information on this can be found in the information bulletin in the ASAP.

It will be explained which measures are necessary in order to assess the transportability. How these measures are to be performed individually depends on the particular situation at the location and is not an element of this document. These procedures are to be defined according to the local regulations / laws and recorded as valid local work instructions.

Prerequisites from a security perspective:

The analysis and assessment of the cell block is to be performed by an "expert for working on HV intrinsically safe vehicles".

The certificate of the transportability is the responsibility of the qualified person.

The following specifications for work safety must also be observed:

Storage of cell blocks

For dual-cell modules, the module connector should be disconnected.

The information for this can be found in the information bulletin in the ASAP.

Note: This document must be printed out and archived with the vehicle data.

cardiagn.com

Assessment cell block

NAME	Date	Serial no.	VIN

Signature: ----------

The electrical assessment of the cell module takes place via the **diagnosis and test module**.

The de-energised state of the high-voltage battery unit is to be determined **before** it is removed from the vehicle.

De-energise the high-voltage system.

Transport preventing faults according to the diagnosis or the test module	Yes	No

Visual assessment:

Smoke	Yes	No
Evidence of fire damage	Yes	No
Heat development	Yes	No
Crack or opening on the housing	Yes	No
Dents on the housing, deformation, damage	Yes	No
Loose connections, loose or damaged	Yes	No
Serial number not readable	Yes	No
Suspected water damage	Yes	No

Cell module, transport capable	**No**	**Yes**

The serial number must be clearly legible. If the serial number can no longer be read, the housing of the cell block must be clearly marked with the serial number.

The electrical and visual assessment must be set down in writing!

If one or more points is/are answered with yes the following procedure must be clarified with technical support! Furthermore, the high-voltage battery unit that has been removed must be blocked off with high-voltage barrier tape. If the high-voltage battery unit is still in the vehicle, the vehicle must be made inaccessible and blocked off.

obdiagn.com

61 25 ... Assessment of the transportability of the 12 V lithium ion starter / auxiliary battery in service workshops

Initiating:

For analysis and disposal purposes, it is necessary to transport the already used starter batteries. These lithium ion based starter batteries are to be classified as hazardous material according to UN 38.3, and may only be transported under particular prerequisites.

Obtaining the certified transportability between the assessment and delivery of the starter / auxiliary battery to the disposal/transportation company is the responsibility of a qualified person. For shipping one also needs to take into account the influence of the storage requirements and other possible occurring events for the determined transportability. If there is a possibility that previously certified transportability is no longer valid, it must be reassessed using the guideline.

The transport in the sense of the hazardous goods legislation is organised in three areas:

1. Assessment of the transportability
2. Transport preparation
3. Performing the transport

This document contains all the necessary information in order to assess the transportability of a used 12 V lithium ion starter / auxiliary battery. The transport preparation and execution is **not** an element of this document.

Further information on this can be found in the information bulletin in the ASAP.

It will be explained which measures are necessary in order to assess the transportability. How these measures are to be performed individually depends on the particular situation at the location and is not an element of this document. These procedures are to be defined according to the local regulations / laws and recorded as valid local work instructions.

Prerequisites from a security perspective:

It should be noted that working on the open battery is prohibited.

The analysis , assessment and certification of the transportability of the 12 V lithium ion starter / auxiliary battery is the responsibility of a qualified person.

The following specifications for work safety must also be observed:

Storage of the lithium ion starter / auxiliary battery

The following points should be noted for reasons work safety point:

The battery must always protected against short circuit (cover the terminals).

The information for this can be found in the information bulletin in the ASAP.

Note:
For better traceability, this document must be printed out and archived with the vehicle data.

Assessment of the 12 V lithium ion starter / auxiliary battery

NAME	Date	Serial no.	VIN

Signature: ----------

The electrical assessment of the 12 V lithium ion starter / auxiliary battery takes place via the diagnosis and test module.

cardiagn.com

Transport preventing faults according to the diagnosis or the test module	Yes	No

Visual assessment:

Smoke	Yes	No
Evidence of fire damage	Yes	No
Heat development	Yes	No
Deformations, changes (scratches up to 0.5 mm deep or 5 cm long are permitted)	Yes	No
Cracked or broken housing	Yes	No
Electrolyte odour	Yes	No
Noise generation	Yes	No
Loose connections, loose or damaged	Yes	No
Serial number/label safety information cannot be read	Yes	No
DMC code is not readable or no functional LIN communication can be established	Yes	No
Suspected water damage	Yes	No

The serial number must be clearly legible. If the type plate can no longer be read, the housing of the 12 V lithium ion starter / auxiliary battery must be clearly marked with the serial number.

The label of the safety information must be replaced if it is illegible.

The electrical and visual assessment must be set down in writing!

If one or more points is/are answered with yes the following procedure must be clarified by technical support! Furthermore, the removed 12 V lithium ion starter / auxiliary battery must be blocked off with high-voltage barrier tapes. If a 12 V lithium ion starter / auxiliary battery is still located in the vehicle, the vehicle must be parked in the open.

cardiagn.com

61 00 ... Battery charging calendar

Battery charging calendar 2016 (PDF file)

Battery charging calendar 2017 (PDF file)

Battery charging calendar 2018 (PDF file)

Battery charging calendar 2019 (PDF file)

Information for the battery charging calendar

cardiagn.com

61 00 ... Battery log form

Battery log form 2016

Battery log form 2017

Battery log form 2018

Battery log form 2019

cardiagn.com

61 25 ... Notes on repair of high-voltage battery unit

1. Prerequisite

Various organisational prerequisites need to be fulfilled before the repair of a high-voltage battery unit is permitted and can be carried out in an expedient way. These prerequisites concern both, the commercial company and the service employee.

The repair of a high-voltage battery unit is intended to be carried out exclusively by commercial companies featuring the service format BMW i Service Extended Battery or BMW i Service Full.

A commercial company featuring the service format BMW i Service Basic is able to remove and install a high-voltage battery unit but cannot perform any repair work on or in the high-voltage battery unit. If a repair is required according to the test schedule in the diagnosis system, the vehicle or the high-voltage battery unit must be transported to a commercial company featuring the service format BMW i Service Extended Battery or BMW i Service Full. The repair is to be carried out in such a workshop.

The commercial company must make available the required special tools and a suitable workbay for the repair.

The most important special tools are the following:

- Mobile lift table MHT 1200 + set of adapters to remove and install the high-voltage battery unit
- Charger for cell blocks of high-voltage battery unit
- Diagnosis system for the repaired high-voltage battery unit
- Lifting tackle to remove and install cell blocks
- Panel wedges made of plastic to remove clips within the high-voltage battery unit
- Lifting traverse for the complete high-voltage battery unit
- High-voltage barrier tape
- Yellow cones relating to high-voltage recommended

Sourcing reference:

See Aftersales Assistance Portal (ASAP) - Service/Technical - Workshop Equipment (Start BMW) - Shop Workshop Equipment or at www.bmwgroup.com

Only service employees being qualified for the repair of the high-voltage battery unit may carry out this procedure.

This includes training for "experts for work on high-voltage-intrinsically safe vehicles".

Before removing and opening the high-voltage battery unit, troubleshooting is to be carried out by means of the relative diagnosis system. Only if determined by the test schedule and if the prerequisite „no mechanical damage on the outside“ is satisfied, the high-voltage battery unit may be opened and the faulty component identified by the test schedule can be replaced. No other repair work relating to the high-voltage battery unit than the replacement of faulty components is planned.

It is essential to observe the operational steps specified in the repair instructions very precisely in order to carry out the replacement of a faulty component. The use of the special tools listed therein is absolutely essential as well.

2. Safety rules

- The first step after opening the housing cover to repair the high-voltage battery unit is a visual inspection for mechanical damage.
- A thorough visual inspection of the components inside the working area is required during and/or before and after every operation. When removing one component, all other involved components being accessible need to be checked for damages. If the housing or other internal high-voltage components are damaged, a qualified electrician or Technical Support must be contacted. All repair works relating to the high-voltage battery unit must be stopped immediately for safety reasons
- Check the correct latch mechanism of the connector of the insulation monitoring line at the control unit of the high-voltage battery unit. If this is not fully locked, an isolation fault may not have been detected.
- The separation of the high-voltage cable between the two cell modules mounted on the inside of the housing (across from the connection side of the high-voltage battery unit) is to be always carried out before working on the opened high-voltage battery unit. This procedure ensures the interrupt of the series connection (additional safety)
- The workbay required for the repair of the high-voltage battery unit must be clean (free of grease, dirt and

cardiagn.com

swarf), dry (no leaking fluid) and free of flying sparks. Therefore, avoid close vicinity to areas intended for cleaning of vehicles and to workbays intended for repair work relating to the body. Use movable walls for separation, if needed

- High-voltage barrier tape is required to secure the workbay against unauthorised access (insufficient qualification, customers, visitors, etc.). It is also required in case the high-voltage intrinsic safety is not established or the status is not determined yet. Placing yellow cones with lightning bolt to indicate high-voltage when leaving the working area is recommended
- Do not use tools or other objects with pointed and sharp blades/edges when working on high-voltage components or high-voltage cables and/or in their close vicinity. Diagonal cutting pliers, knives etc. are prohibited. Cable straps inside the low-voltage wiring harness may be opened by means of diagonal cutting pliers
  Allowed: Plastic wedges
- Cable straps relating to high-voltage cable may not be cut open. Damaged clips remain on the high-voltage cable. The remaining, damaged clip must be pushed to a position on the high-voltage line where the clip can not rub. A new clip must then be installed
- Defective or damaged high-voltage cables must be made unusable to ensure they are not reused
- No tools must be forgotten inside the high-voltage battery unit. Check whether all tools are present in the tool box before closing the housing cover
- It is absolutely essential to remove all small parts/screws that fell into the high-voltage battery unit. The use of magnetized screws is generally recommended in order not to lose any screws in the high-voltage battery unit during the repair
- When interruptions of work occur: Secure housing cover against unintended opening by screwing in several screws. Enclose the working area by means of high-voltage barrier tape
- Due to the very slim construction of the radiator, the risk of damage during disassembly and installation is high. Careful handling is absolutely necessary as the cooling of the cell blocks may not be guaranteed when the radiator is damaged (bent, dented). The consequence is a major loss of the electrical range and of the power of the vehicle. In extreme cases, even a breakdown may occur
- Very careful handling is necessary when disconnecting and connecting the insulation detector line at the control unit of the high-voltage battery unit (safety box coming) since high-voltage is present in the thin orange lines. Do not pull on the lines (e.g. to unplug the connector etc.)! The connector must be locked securely when plugged in
- Make sure the plastic lids of the modules are not removed when working on the cell modules (loosing screws, raising and lifting, …). The live cell contacting system is located thereunder. Continuing to work with the lid being removed is not permitted. A qualified electrician or Technical Support must be contacted
- A schematic diagram with limiting sample examples in the training is necessary to get to know the limits. These show when the further work for the "experts for intrinsically safe vehicles" is no longer possible due to absent intrinsic safety, and the Technical Support or a qualified electrician must be contacted
- Remove residual moisture and coarse contamination around the lid of the high-voltage battery unit before beginning the disassembly
- Clean gaskets and sealing surfaces (venting unit, high-voltage connector, signal connector, radiator connection) with a specified cleaning agent before reassembly
- If contamination is present in the high-voltage battery unit, check the cause and carefully clean the affected areas
  Approved cleaning agent:
  - Spirit
  - Windscreen cleaner
  - Glass cleaner
  - Distilled water
  - Vacuum cleaner with plastic top
- Visual inspection for contamination and damage of housing as well as of connections and degassing unit when installed (underfloor). A damaged diaphragm within the venting unit may indicate damaged storage cells. In this case, special carefulness is required when checking and opening the high-voltage battery unit
- Electrolyte
  The majority of the electrolyte is a mixture of lithium-nickel-manganese-cobalt oxide in bound state The quantity of free electrolyte in the high-voltage battery unit is very small. It is a noxious and irritant fluid. Absolutely avoid direct contact of skin with leaking fluid as acid burns may occur. In case of contact with eyes or skin, flush with plenty of clear water and consult a doctor immediately. Burning or evaporating electrolyte is also hazardous. CAREFUL: do not inhale! Ensure sufficient fresh air supply. If breathing ceases, apply artificial respiration and immediately consult a doctor. Notify fire brigade in case of fire. Clear the area immediately and make accident scene safe. Attempt to extinguish the fire without putting persons in danger and use suitable extinguishant, e.g. water

3. Repairing removed high-voltage battery units

- The high-voltage battery unit is a component of large dimensions and heavy weight. Only the combination of the housing and the cell blocks mounted therein provides the high-voltage battery unit with complete stability (rigidity), as required for driving. Therefore, it is necessary to ensure that the housing is positioned on the relative mounting/adapter of the lifting table during replacement and fixation of cell blocks. In this way, one can prevent the housing from bracing during the repair work and ensure the high-voltage battery unit is not installed in the BMW I01 in this condition
- It is extremely important to enter the serial numbers and the installation positions of the replaced components in the SME via the testing device, as well as to carry out the transmission into the diagnosis system. Otherwise, the new installation position will be assigned automatically by the SME. The consequence is an incorrect location data, as the SME does not set correct positions. For a renewed repair of the high-voltage battery unit, the diagnosed faults for the incorrect installation position will be displayed. The consequence is that replacement is done at the wrong location
- In diagnosis, it is not possible to enter the serial numbers of the cell supervision circuits. The serial numbers are transmitted from the cell supervision circuit to the SME using the CAN bus. The SME then sets a corresponding position assignment. This assignment is not always fault-free. That is why the serial number and installation position of the exchanged cell supervision circuit must be checked in the diagnosis after completed repair. If the positions do not match, a position change can be performed with diagnosis. A new serial number of a cell supervision circuit is not entered
- Attention: Do not use powered wrenches as the screws/threads located in the high-voltage battery unit may break due to the low torques!
- The seal must be renewed every time the housing cover is removed to guarantee tightness of the high-voltage battery unit
- The screws are thread-tapping, so pre-insert them manually before tightening them with a tool. Otherwise, the threads of the lower housing section may be damaged!

cardiagn.com

61 00 ... Safety information on handling hybrid cars

1. *Qualification:*
   All repair work on high-voltage components may **only be performed by specially trained personnel** (qualification: Work on high-voltage inherently save vehicles) must be performed by qualified technicians. Each hybrid car requires additional vehicle specific training with training achievement controls.
   Required training is offered by the BMW Training Academy.
2. *Identification:*
   Observe **warning notices** on high-voltage components. When replacing individual high-voltage components, check if warning stickers are present. Independently attaching warnings is only allowed on the locations provided for them. Use only approved and appropriately identified original new parts.
3. *Rules of conduct/protective measures:*
   - Note operating instructions for handling high-voltage battery units.
   - Do not under any circumstances touch open high-voltage cables and high-voltage components on damaged vehicle before shutting down the high-voltage electrical system.
   - In the event of damage (mechanical, thermal) transition metal oxides, carbon, electrolyte solvents and their products of decomposition may be released.
     Suitable acid-resistant protective clothing/equipment must therefore be used when handling the vehicle!
     - Hand protection: Gloves
     - Eye protection: Safety goggles

     Damaged high-voltage battery units must be stored in an acid-resistant pan in a location in the open that is protected against the weather (sun, rain) and secured against unauthorised access. Do not inhale escaping gasses.
   - Prevent escaping substances from entering drains, pits and the sewer system.
   - Collect any material that is discharged and have it disposed of according to the work instruction, wear acid-resistant protective clothing when doing so.
   - Notify the fire brigade if fire breaks out, clear the area immediately and make accident scene safe. Attempt to extinguish the fire without putting persons in danger (suitable extinguishant: water and water foam).
   - A cut 2nd emergency separation point must be repaired with a butt connector.
4. *Measures before starting work:*
   - Each job on the vehicle must be assigned by appropriately trained personnel. Before work is started, this electrician must place the vehicle in the operating condition required to perform the relevant activity. The qualified personnel's instructions and directions absolutely must be followed. **No work may be carried out without this qualified personnel being consulted first.**
   - It is **not** permitted to work on the high voltage system or on high voltage components while the engine is running.
   - The readiness to drive must be ended before shutting off the voltage of the high-voltage system. The readiness to drive is ended when the driver is absent only under the following conditions:
     1. seat belt buckle unlocked **and**
     2. the driver's door is open **and**
     3. no brake activated **and**
     4. the accelerator pedal is not activated **and**
     5. speed < 3 km/h (2 mph)
   - Work on live high-voltage components is expressly prohibited. Before each operation on the high-voltage system, the system must be isolated from the power supply by qualified personnel (high-voltage safety connector Off) and secured against unauthorised recommissioning (padlock).
   - After each deactivation of the high-voltage system, it is essential to observe a **waiting period** of at least **10 seconds** prior to further work.
   - Before beginning work, it is mandatory to check that the equipment is de-energised and is protected against being energised again.
     Work is only permitted to begin if:
     1. Corresponding display in the KOMBI **High-voltage system deactivated** or

     When a high-voltage warning is active (indicator light, Check Control, etc.), it is essential to determine and eliminate the cause of this warning via the diagnosis system before continuing with any other work.
     If it cannot be definitively established that the equipment is de-energised, work is not permitted to begin. **Danger to life!** Before work begins, a qualified electrician (1000 V AC) must verify that the

cardiagn.com

system is de-energised using appropriate measuring devices and procedures.
=> In this case, Technical Support must be contacted!

- Do not perform any work on the vehicle while it is charging. Before starting work, disconnect the charging cable from the vehicle.
  Battery charging may result in heating of the high-voltage battery unit. This heating may lead to sporadic launches of the electric fan (switch-on request from the electric fan). Therefore, work in the vicinity of the electric fan during the charging procedure is prohibited. Ensure freedom of movement of the battery charge lines in the vicinity of the electric fan.

5. *Measures during/after activities:*
   - Identifiable mechanical damage to or tampering with high-voltage components must be reported immediately to the qualified personnel in charge.
   - When carrying out any work on the high-voltage system, it is prohibited to drive externally all the drivetrain components (wheels, gearbox, drive shafts, etc.).
   - *E72 only:* When the "Power Electronic Box Cover" is removed, the high-voltage system is not permitted to be activated. The high-voltage service disconnect must only be used when the "Power Electronics Box Cover" is completely installed.
   - High-voltage cables (orange coating) and their connectors and stop parts **may not** be repaired. If damaged, a cable must always be replaced completely.
   - When working in the vicinity of high-voltage components (identified accordingly with warning stickers and orange-coloured coating), protect these components against damage.
   - The specified work steps in the repair instructions must be adhered to exactly.
   - High-voltage components and their holders must be screwed/bolted to the defined tightening torque. Tightening torques and tightening specifications must be observed.
   - Connecting high-voltage components to body ground is crucial to safety for reasons of equipotential bonding. For this reason, it is prohibited to operate any high-voltage components without them being correctly connected to body ground. The measurements (insulation/potential equalisation measurement) are performed automatically by the vehicle. Manual measurement is not therefore necessary.
     For a correct earthing connection, the retaining elements of high-voltage components must not be painted. Follow further painting notes.
   - Removed high-boltage battery units must be stored in a manner that protects them from misuse and damage.
   - Damaged or warning stickers that are no longer legible on high-voltage components must always be replaced.
6. *Potential compensation:*
   Equipotential bonding lines, high-voltage cables and the battery negative lead to the EME are fitted with safety screws.
   - Clean contact faces and have then checked by a second person.
   - Tighten down screws/bolts to specified torque.
   - Have tightening torque checked by a second person.
   - Both persons must document that the work has been carried out correctly in the vehicle records.

cardiagn.com

61 13 ... Unlocking and disconnecting various plug connections in electrical and hybrid vehicles

Attention!

Observe the following instructions for handling high-voltage plug connections:

- Damaged high-voltage plug connections must be replaced completely. Repair is not permitted.
- Dirt contamination must be removed before opening the plug connection.

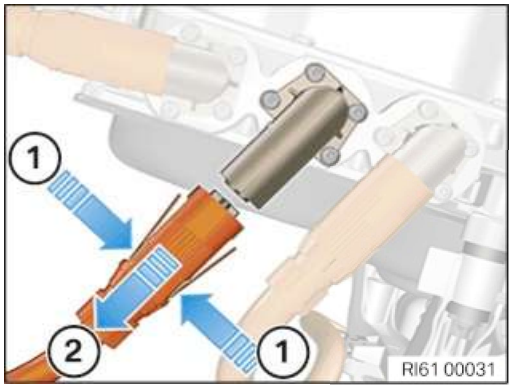

Disconnect the Hirschmann high-voltage connector:

Press the lock (1) on the left and right on the connector in the direction of the arrow.

Pull off connector (2) in direction of arrow.

Attention!

Connector (2) is difficult to pull off.

In the event of damage to high-voltage connector (2), the complete high-voltage cable must be replaced!

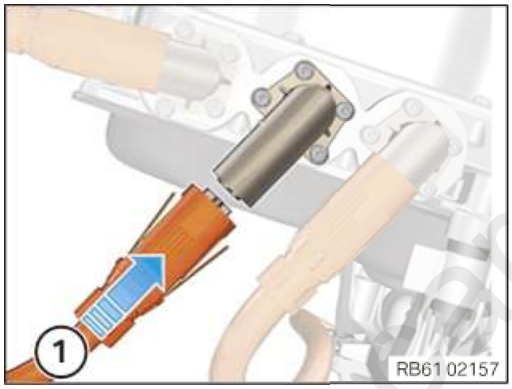

Connect the Hirschmann high-voltage connectors:

Slide the connector (1) on in the direction of the arrow.

Note:
Connector (2) must lock audibly.

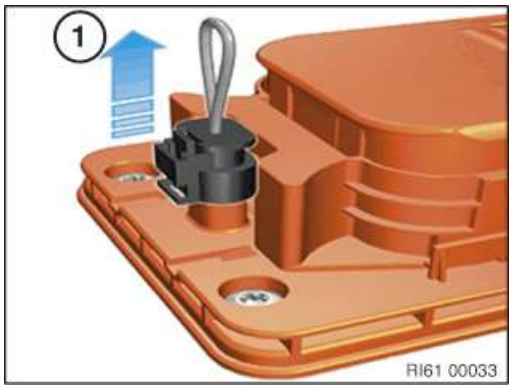

Disconnect the Kostal high-voltage connector:

Unlock and disconnect high-voltage interlock loop (1).

cardiagn.com

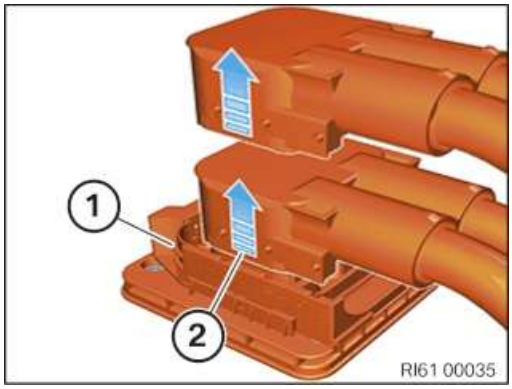

Push the lock (1) fully to the front.

Lift the connector (2) and remove it entirely.

Attention!

Plug connection (3) is difficult to pull off.

The connector (2) must be completely pulled off the opposite housing in one step. Damage may be caused to contact protection if connector is only partly pulled off and then closed again!

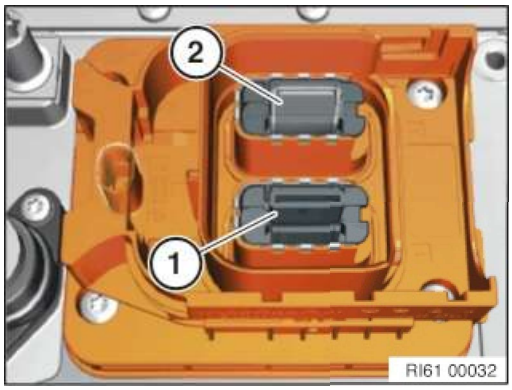

Check the Kostal high-voltage connector and connection for damage:

Check the touch protection for damage and correct positioning (1).

Warning!

Do not touch unprotected connector (2)!

If the contact protection (1) has been pushed to the bottom (2), the high-voltage connector must be refitted.

If contact protection (1) remains in bottom position (2) after reinstallation, the contact protection is faulty and the component must be replaced!

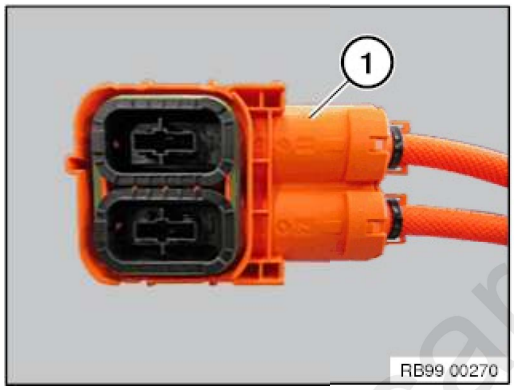

Check the high-voltage connector (1) for damage.**Warning!**

In the event of damage to the high-voltage connector (1), the complete high-voltage cable must be replaced!

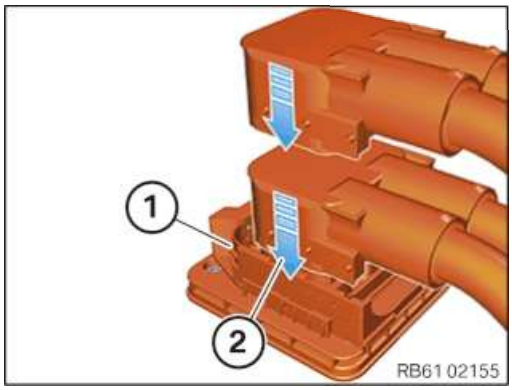

Connect the Kostal high-voltage connector:

Connect the connector (2) in one single movement to the counter-housing.

Push the lock (1) fully to the rear.

Attention!

Plug connection (3) must be correctly locked by lock (2), otherwise there is a risk of damage.

cardiagn.com

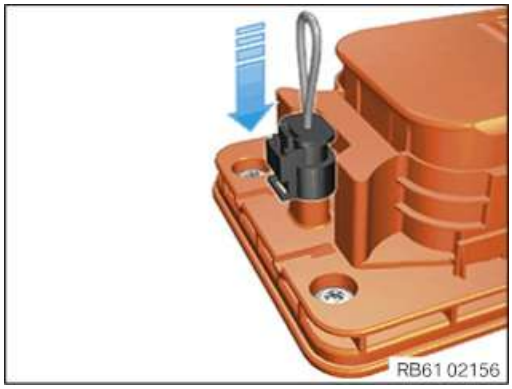

Connect the connector for the high-voltage interlock.

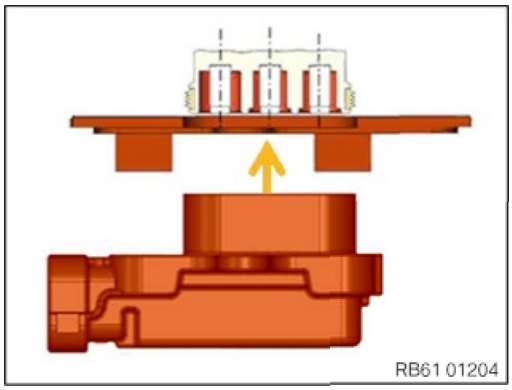

Three-phase high-voltage connector:

Connect and disconnect the connector straight.

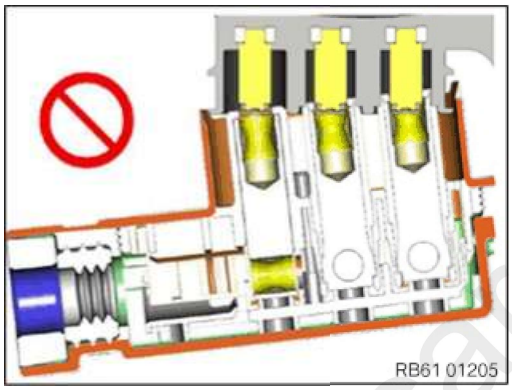

Attention!

The system is designed to only offer limited protection against damage caused by connectors that are inserted at an angle.

Increased tilted connections will increase the connecting force and the risk of danger.

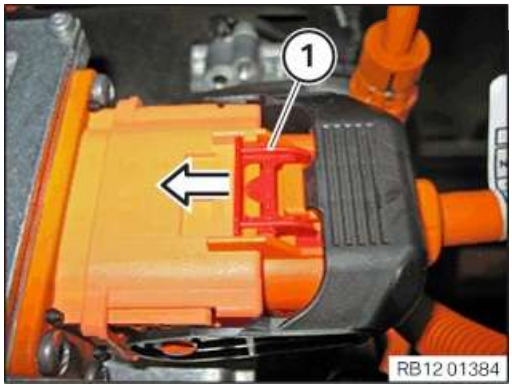

Disconnect the high-voltage connector from the high-voltage connection of the KLE:

Slide lock (1) in direction of arrow up to stop.

cardiagn.com

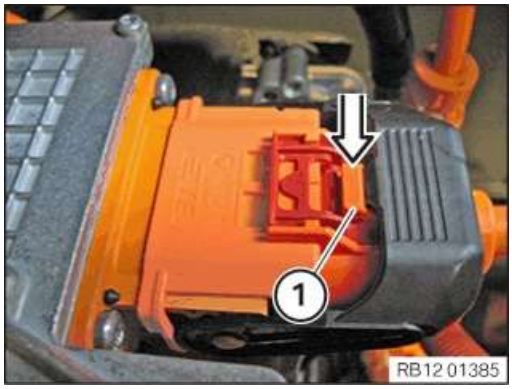

Press lock (1).

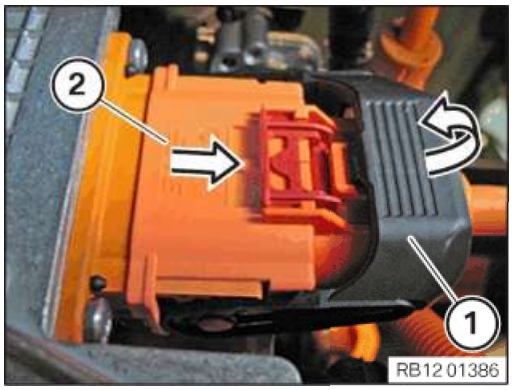

Open the lock (1) completely and disconnect the connector (2).

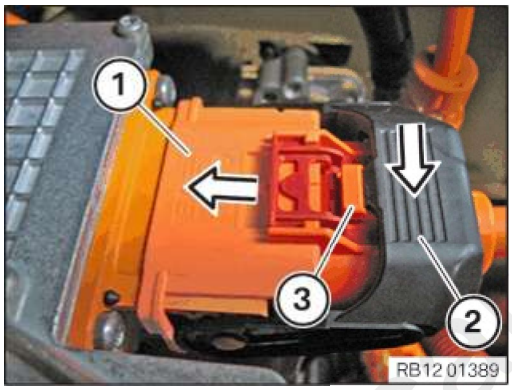

Connect the high-voltage connector to the high-voltage connection of the KLE:

Connect the connector (1) to the limit position and close the lock (2).

Attention!

Lock (2) must snap audibly into place.

The retaining lug of the lock (2) must be positioned completely under the lock (2).

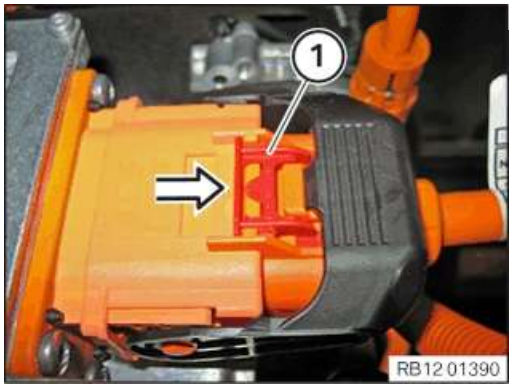

Slide the lock (1) on to the stop in the direction of the arrow.

cardiagn.com

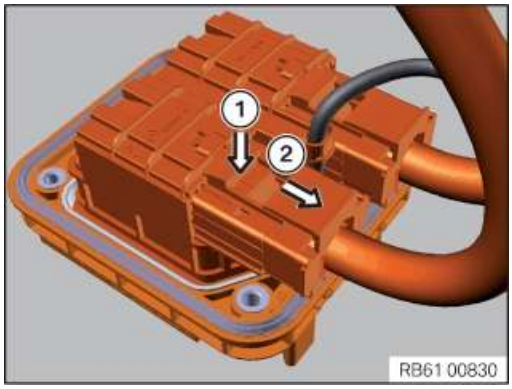

High-voltage connector on the high-voltage connection of the high-voltage battery unit:

Press down unlocking (1) in direction of arrow and pull off connector in direction of arrow (2).

Attention!

Contact protection is no longer provided in the event of a damaged connector housing.

In this case, contact technical support.

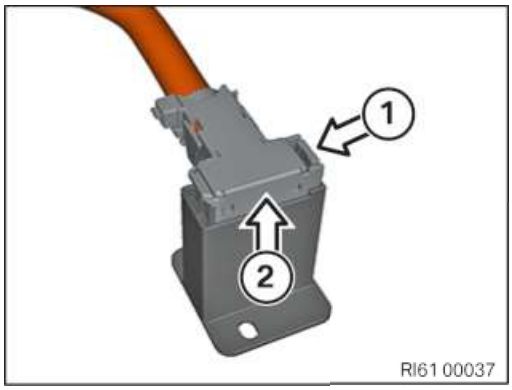

High-voltage connector on the cell module I01:

Press unlocking device (1) together and pull off connector upwards (2).

Attention!

Contact protection is no longer provided in the event of a damaged connector housing.

In this case, contact technical support.

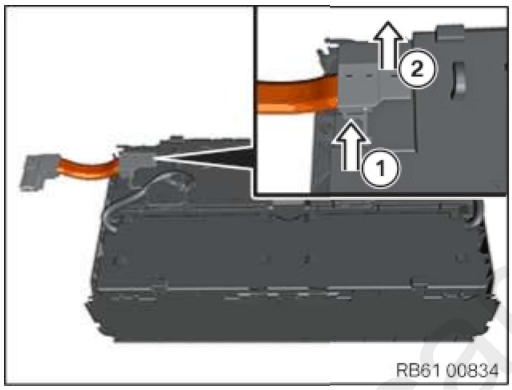

High-voltage connector on the cell module (cell module connecting line):

Press unlocking (1) in direction of arrow and pull off connector in direction of arrow (2).

Attention!

Contact protection is no longer provided in the event of a damaged connector housing.

In this case, contact technical support.

cardiagn.com