4C

2018

OWNER'S MANUAL

VEHICLES SOLD IN CANADA

With respect to any Vehicles Sold in Canada, the name FCA US LLC shall be deemed to be deleted and the name FCA Canada Inc. used in substitution therefore.

DRIVING AND ALCOHOL

Drunken driving is one of the most frequent causes of accidents.

Your driving ability can be seriously impaired with blood alcohol levels far below the legal minimum. If you are drinking, don't drive. Ride with a designated non-drinking driver, call a cab, a friend, or use public transportation.

WARNING!
Driving after drinking can lead to an accident. Your perceptions are less sharp, your reflexes are slower, and your judgment is impaired when you have been drinking. Never drink and then drive.

This manual illustrates and describes the operation of features and equipment that are either standard or optional on this vehicle. This manual may also include a description of features and equipment that are no longer available or were not ordered on this vehicle. Please disregard any features and equipment described in this manual that are not on this vehicle.

FCA US LLC reserves the right to make changes in design and specifications, and/or make additions to or improvements to its products without imposing any obligation upon itself to install them on products previously manufactured.

Copyright © 2017 FCA US LLC

TABLE OF CONTENTS

SECTION		PAGE
1	INTRODUCTION	3
2	GRAPHICAL TABLE OF CONTENTS	7
3	GETTING TO KNOW YOUR VEHICLE	13
4	GETTING TO KNOW YOUR INSTRUMENT PANEL	53
5	SAFETY	81
6	STARTING AND OPERATING	129
7	IN CASE OF EMERGENCY	159
8	SERVICING AND MAINTENANCE	189
9	TECHNICAL SPECIFICATIONS	251
10	MULTIMEDIA	261
11	CUSTOMER ASSISTANCE	265
12	INDEX	271

INTRODUCTION

CONTENTS

■ INTRODUCTION 4
■ HOW TO USE THIS MANUAL 5
□ Essential Information 5
□ Symbols. 5
■ WARNINGS AND CAUTIONS 6
■ VEHICLE MODIFICATIONS/ALTERATIONS . . .6

INTRODUCTION

Dear Customer,

Congratulations on selecting your new vehicle. Be assured that it represents precision workmanship, distinctive styling, and high quality. This Owner's Manual has been prepared with the assistance of service and engineering specialists to acquaint you with the operation and maintenance of your vehicle. It is supplemented by Warranty Information, and customer oriented documents. In the attached Warranty Booklet you will find a description of the services that FCA offers to its customers, the Warranty Certificate and the details of the terms and conditions for maintaining its validity. Please take the time to read all of these publications carefully before driving your vehicle for the first time. Following the instructions, recommendations, tips, and important warnings in this manual will help assure safe and enjoyable operation of your vehicle. Be sure you are familiar with all vehicle controls, particularly those used for braking, steering, transmission, and transfer case shifting. Learn how your vehicle handles on different road surfaces. Your driving skills will improve with experience.

This Owner's Manual describes all versions of this vehicle. Options and equipment dedicated to specific markets or versions are not expressly indicated in the text. Therefore, you should only consider the information which is related to the trim level, engine, and version that you have purchased. Any content introduced throughout the Owner's Information, that may or may not be applicable to your vehicle, will be identified with the wording "If Equipped". All data contained in this publication are intended to help you use your vehicle in the best possible way. FCA aims at a constant improvement of the vehicles produced. For this reason, it reserves the right to make changes to the model described for technical and/or commercial reasons. For further information, contact an authorized dealer.

NOTE: After reviewing the Owner's Information, it should be stored in the vehicle for convenient referencing, and remain with the vehicle when sold.

When it comes to service, remember that your authorized dealer knows your vehicle best, has factory-trained technicians and genuine MOPAR® parts, and cares about your satisfaction.

HOW TO USE THIS MANUAL

Essential Information

Consult the Table of Contents to determine which section contains the information you desire.

Since the specification of your vehicle depends on the items of equipment ordered, certain descriptions and illustrations may differ from your vehicle's equipment.

The detailed index at the back of this Owner's Manual contains a complete listing of all subjects.

Symbols

Consult the following table for a description of the symbols that may be used on your vehicle or throughout this Owner's Manual:

WARNINGS AND CAUTIONS

This Owner's Manual contains **WARNINGS** against operating procedures that could result in a collision or bodily injury. It also contains **CAUTIONS** against procedures that could result in damage to your vehicle. If you do not read this entire Owner's Manual, you may miss important information. Observe all Warnings and Cautions.

VEHICLE MODIFICATIONS/ALTERATIONS

WARNING!

Any modifications or alterations to this vehicle could seriously affect its roadworthiness and safety and may lead to a collision resulting in serious injury or death.

GRAPHICAL TABLE OF CONTENTS

CONTENTS

■ FRONT VIEW 8
■ REAR VIEW 9
■ INSTRUMENT PANEL 10
■ INTERIOR 11

FRONT VIEW

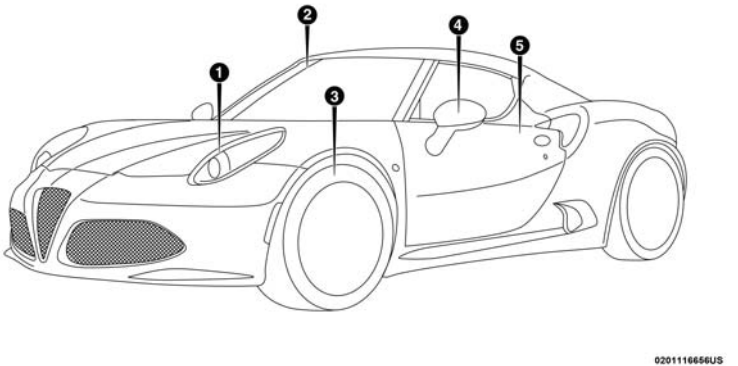

Front View

1 — Headlights
2 — Windshield
3 — Wheels/Tires
4 — Exterior Mirrors
5 — Doors

REAR VIEW

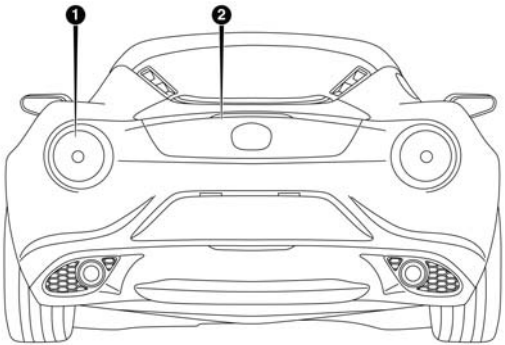

0201116657US

Rear View

1 — Rear Lights

2 — Decklid

INSTRUMENT PANEL

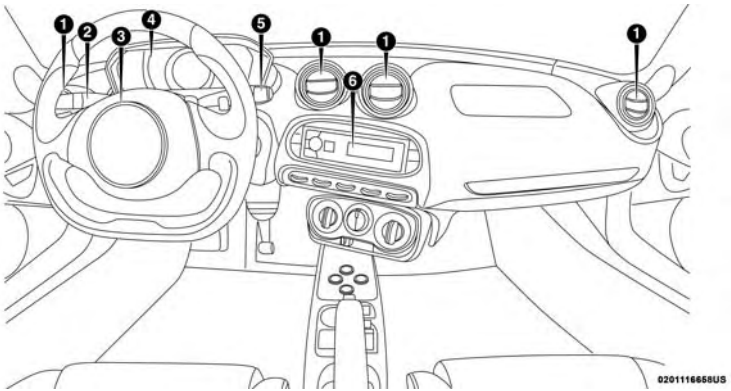

Instrument Panel

1 — Air Vents
2 — Multifunction Lever
3 — Steering Wheel
4 — Instrument Cluster
5 — Windshield Wiper Lever
6 — Radio

INTERIOR

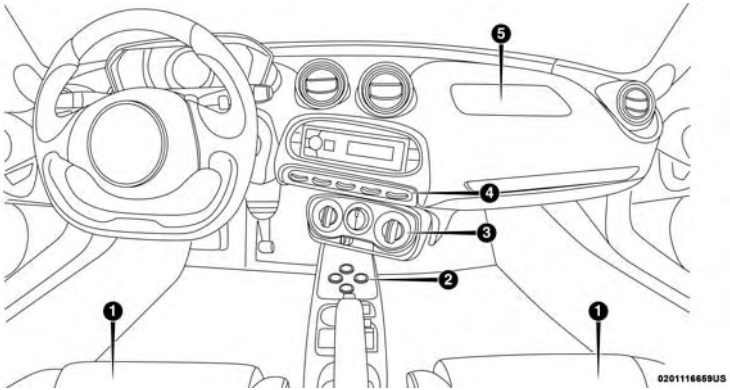

Interior

1 — Seats
2 — Gear Selector
3 — Climate Controls
4 — Door Locks/Window Switches
5 — Glove Compartment

GETTING TO KNOW YOUR VEHICLE

CONTENTS

■ KEYS 15
- □ Key Fob 15

■ IGNITION SWITCH 17
- □ Ignition Key Removal 17
- □ Key-In-Ignition Reminder 19

■ SENTRY KEY 19
- □ Replacement Keys 19
- □ General Information 20

■ VEHICLE SECURITY ALARM SYSTEM — IF EQUIPPED 20
- □ To Arm The System 21
- □ To Disarm The System 21

■ DOORS 22
- □ Central Door Locking/Unlocking 22
- □ Emergency Door Locking Device 23

■ SEATS 24
- □ Manual Front Seats 25

■ HEAD RESTRAINTS 26
- □ Non-Adjustable Head Restraints 26

■ STEERING WHEEL 27
- □ Tilt/Telescoping Steering Column 27

■ MIRRORS 27
- □ Inside Day/Night Mirror 27
- □ Outside Mirrors 28
- □ Heated Mirrors 29

■ EXTERIOR LIGHTS 30
- □ Multifunction Lever. 30
- □ Headlights 30

- Daytime Running Lights 31
- High Beams 31
- Flash-To-Pass 31
- Parking Lights 31
- Follow Me Home/Headlight Delay. 31
- Turn Signals 32
- Lane Change Assist 32

■ INTERIOR LIGHTS 32
- Interior Light 32

■ WINDSHIELD WIPERS AND WASHERS 34
- Windshield Wiper Operation 34

■ CLIMATE CONTROLS 35
- Climate Controls Overview 35
- Climate Control Functions 39

■ WINDOWS 41
- Power Windows 41

■ DECKLID 43
- To Open The Decklid 43
- To Close The Decklid. 46

■ INTERNAL EQUIPMENT 47
- Storage. 47
- Cupholder 50
- Power Outlets 50

KEYS

Key Fob

The key fob contains the key fob with an integrated mechanical key. To use the mechanical key, simply push the key release button.

Lock or unlock the door with a push of the button.

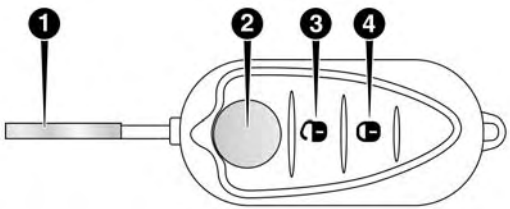

0301110466US

Key Fob

1 — Vehicle Key
2 — Push To Open/Close Vehicle Key
3 — Unlock Button
4 — Lock Button

To Unlock The Doors

Push and release the unlock button on the key fob to unlock the doors. The park lights and turn signal lights will flash to acknowledge the signal and the illuminated entry system will turn on.

To Lock The Doors

With Integrated Key

You can insert the key with either side up. To lock the door, turn the key to the left. To unlock the door, turn the key to the right. Refer to “Bodywork” in “Servicing And Maintenance” for further information.

With Button On Key Fob

Push and release the lock button on the key fob will lock the doors, switching off the internal roof light and single flashing of direction indicators.

If one or more doors are open, the doors will not be locked. This is indicated by a rapid flashing of the direction indicators. The doors will be locked if the decklid is open however.

When a speed of more than 12 mph (20 km/h) is reached, the doors will be locked automatically if the Autoclose function was selected. Refer to "Instrument Cluster Display — If Equipped" in "Getting To Know Your Instrument Panel" for further information.

When the doors are locked from outside the vehicle (using the key fob), the door lock indicator will illuminate for a few seconds and then start flashing (deterrent function).

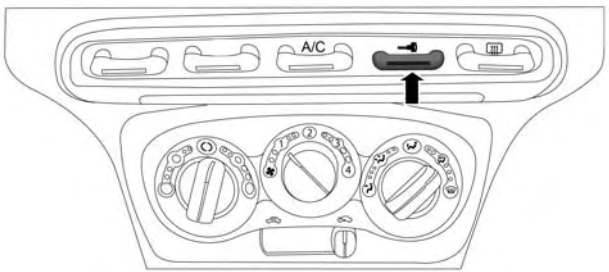

Door LED Lock Indicator

Replacing The Battery In The Key Fob

NOTE: Perchlorate Material – special handling may apply. See www.dtsc.ca.gov/hazardouswaste/perchlorate

The recommended replacement battery is CR2032.

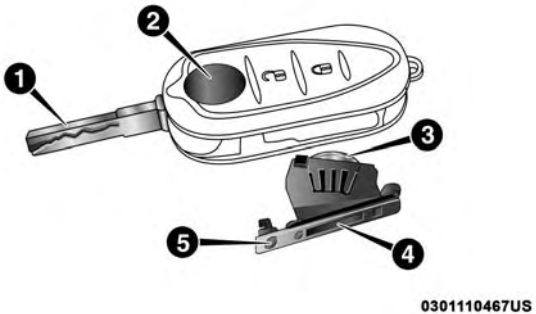

Battery Replacement Procedure

1 — Mechanical Key
2 — Release Button
3 — Battery
4 — Battery Compartment
5 — Screw

Replace the key fob battery with the following procedure:

1. Push release button and move the mechanical key to opening position.
2. Turn screw to unlock using a fine bit screwdriver.

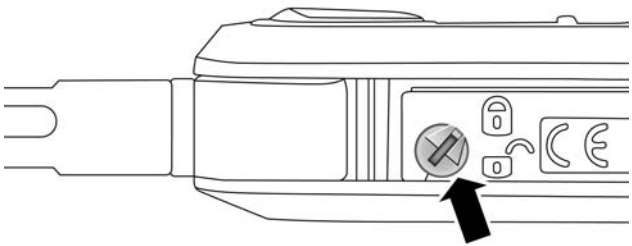

Key Fob Screw Location

3. Remove battery compartment.
4. Replace battery respecting the polarity.
5. Reinsert battery compartment in the key and secure it by turning screw to lock.

General Information

The following regulatory statement applies to all radio frequency (RF) devices equipped in this vehicle:

This device complies with Part 15 of the FCC Rules and with Industry Canada license-exempt RSS standard(s). Operation is subject to the following two conditions:

1. This device may not cause harmful interference, and
2. This device must accept any interference received, including interference that may cause undesired operation.

NOTE: Changes or modifications not expressly approved by the party responsible for compliance could void the user's authority to operate the equipment.

IGNITION SWITCH

Ignition Key Removal

1. Push the brake pedal and place the transmission into first (1) or reverse (R) gear by selecting/pushing the buttons on the console.
2. Rotate the key to the STOP (OFF/LOCK) position and engage the handbrake and release brake pedal.

3. Remove the key from the ignition switch lock cylinder.

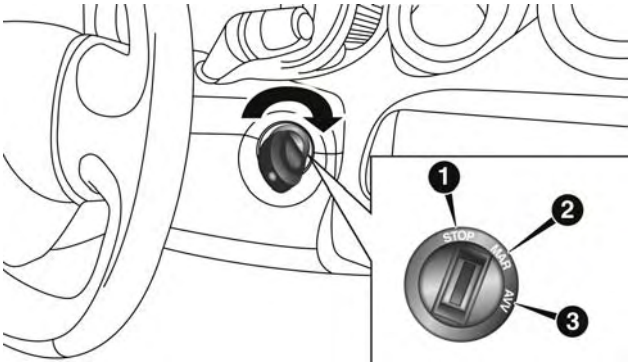

Ignition Switch Positions

1 — STOP (OFF/LOCK)
2 — MAR (ON/RUN)
3 — AVV (START)

WARNING!

- **Before exiting a vehicle, always shift the automatic transmission into PARK or the manual transmission into REVERSE, apply the parking**

(Continued)

WARNING! ***(Continued)***

brake, turn the engine OFF, remove the key fob from the ignition and lock your vehicle.
- **Never leave children alone in a vehicle, or with access to an unlocked vehicle.**
- **Allowing children to be in a vehicle unattended is dangerous for a number of reasons. A child or others could be seriously or fatally injured. Children should be warned not to touch the parking brake, brake pedal or the transmission gear selector.**
- **Do not leave the key fob in or near the vehicle, or in a location accessible to children. A child could operate power windows, other controls, or move the vehicle.**
- **Do not leave children or animals inside parked vehicles in hot weather. Interior heat build-up may cause serious injury or death.**

CAUTION!

An unlocked vehicle is an invitation. Always remove the key from the ignition and lock all the doors when leaving the vehicle unattended.

Key-In-Ignition Reminder

Opening the driver's door when the key is in the ignition and the ignition switch position is in the STOP (OFF/LOCK) position, sounds a signal to remove the key.

SENTRY KEY

The Sentry Key Immobilizer System prevents unauthorized vehicle operation by disabling the engine. The system does not need to be armed or activated. Operation is automatic, regardless of whether the vehicle is locked or unlocked.

The system uses ignition keys which have an embedded electronic chip (transponder) to prevent unauthorized vehicle operation. Therefore, only keys that are programmed to the vehicle can be used to start and operate the vehicle.

NOTE: A key which has not been programmed is also considered an invalid key, even if it is cut to fit the ignition switch lock cylinder for that vehicle.

If the vehicle security light is on after the key is turned to the MAR/ON/RUN position, it indicates that there is a problem with the electronics.

CAUTION!

- **Always remove the Sentry Key from the vehicle and lock all doors when leaving the vehicle unattended.**
- **The Sentry Key Immobilizer system is not compatible with some aftermarket remote starting systems. Use of these systems may result in vehicle starting problems and loss of security protection.**

All of the keys provided with your new vehicle have been programmed to the vehicle electronics.

Replacement Keys

NOTE: Only keys that have been programmed to the vehicle electronics can be used to start the vehicle. Once a Sentry Key has been programmed to a vehicle, it cannot be programmed to any other vehicle.

NOTE: When having the Sentry Key Immobilizer System serviced, bring all vehicle keys with you to an authorized dealer.

General Information

The following regulatory statement applies to all radio frequency (RF) devices equipped in this vehicle:

This device complies with Part 15 of the FCC Rules and with Industry Canada license-exempt RSS standard(s). Operation is subject to the following two conditions:

1. This device may not cause harmful interference, and
2. This device must accept any interference received, including interference that may cause undesired operation.

NOTE: Changes or modifications not expressly approved by the party responsible for compliance could void the user's authority to operate the equipment.

VEHICLE SECURITY ALARM SYSTEM — IF EQUIPPED

The vehicle security alarm monitors the doors and decklid for unauthorized entry. It will also activate the siren and emit a visual flash of the turn signals (front and rear) for any of the following intrusion cases.

Operation

The alarm activates in the following cases:

1. Wrongful opening of one of the doors or the decklid (perimeter protection).
2. Cutting of the battery leads.
3. Movement inside the passenger compartment (volumetric protection).
4. Anomalous lifting/tilting of the vehicle.

Operation of the alarm is indicated by a visual signal (flashing of the direction indicators for several seconds). There is a maximum number of visual cycles. When this is reached the system returns to normal operation.

To Arm The System

With the doors and decklid closed and the ignition key either turned to STOP (OFF/LOCK) or removed, point the key towards the vehicle then push and release the lock button.

The system emits a visual signal and activates door locking.

A self-diagnosis stage lasting approximately 30 seconds precedes the activation of the alarm. During the self-diagnosis, the vehicle security light flashes in the instrument panel at a frequency of about one flash per second.

After the self-diagnosis stage, the vehicle security light flashes at a lower frequency (approximately one flash every three seconds).

If, after the alarm is switched on, a second visual signal emit via the vehicle security light in the instrument panel, wait about four seconds and switch off the alarm by pushing the lock button, check that the doors and decklid are closed correctly and then reactivate the system by pushing the unlock button.

If the alarm emits a visual signal even when the doors and decklid are closed correctly, a system malfunction has occurred: in this case, contact an authorized dealer.

To Disarm The System

Deactivation

Push the unlock button.

The following operations are performed:

- Two brief flashes of the direction indicators.
- Unlocking of the doors.

NOTE:

- If the central door locking system is released using the metal insert of the key, the alarm is not disabled.
- In the event of accidental activation of the alarm, or in any case to interrupt the visual signal cycle when activated, it is possible to push the unlock button or turn the ignition key to MAR (ON/RUN) for at least five seconds, after which the system will deactivate.

Disarming

To completely disable the alarm (e.g. during a lengthy period of vehicle inactivity), lock the vehicle by turning the metal insert of the key in the door lock.

NOTE: If the batteries of the key fob run out or there is a fault in the system, the alarm can be switched off by inserting the key in the ignition switch and turning it to MAR (ON/RUN).

DOORS

Central Door Locking/Unlocking

Locking/Unlocking Doors From The Inside

Push the lock LED indicator button . The button has an LED that indicates whether the doors are locked or unlocked.

Pushing the lock LED indicator button again centrally unlocks all doors and switches off the LED.

Pushing the lock LED indicator button again centrally locks all the doors. The doors will be locked only if all the doors are properly shut.

Once the doors have been locked using the remote control or the key, it will no longer be possible to unlock them by pushing the lock LED indicator button.

NOTE: In the absence of electrical power supply (blown fuse, battery disconnected, etc.), it is still possible to lock the doors manually.

Locking Doors From The Outside

With the doors closed, push the lock button on the key fob or turn the metal insert (located inside the key fob) in the door lock.

The door lock LED indicator button will illuminate to indicate that the doors have locked.

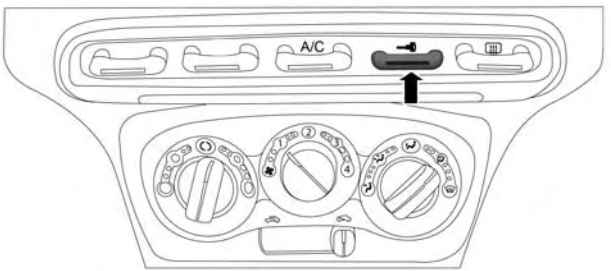

Door Lock LED Indicator

NOTE: Door locking is carried out with all doors shut.

Unlocking Doors From The Outside

Push the unlock button on the key fob or turn the metal insert (located inside the key fob) in the driver side door lock.

WARNING!

- **For personal security and safety in the event of a collision, lock the vehicle doors before you drive as well as when you park and leave the vehicle.**
- **Never leave children alone in a vehicle, or with access to an unlocked vehicle. Allowing children to be in a vehicle unattended is dangerous for a number of reasons. A child or others could be seriously or fatally injured. Children should be warned not to touch the parking brake, brake pedal or the transmission gear selector.**
- **Do not leave the key fob in or near the vehicle, or in a location accessible to children. A child could operate power windows, other controls, or move the vehicle.**

Door Opening/Closing Mechanism Reset

If the battery is disconnected or the protection fuse blows, the door opening/closing mechanism must be reset as follows:

1. Close all the doors.
2. Push the unlock button on the key fob or the door locking/unlocking LED indicator button on the dashboard.
3. Push the lock button on the key fob or the door locking/unlocking LED indicator button on the dashboard.

Emergency Door Locking Device

Passenger Side Door

The passenger side door has a device to lock it when there is no current.

To lock it, place the metal insert of the ignition key in the child protection lock and turn it clockwise.

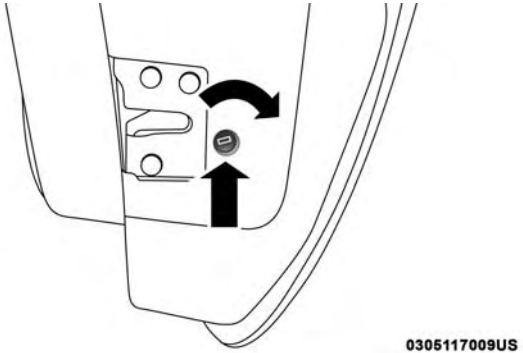

Child Protection Lock

To restore the starting condition of the door locks (only if battery charge restored), proceed as follows:

- Push the unlock button on the key fob.
- Push the door locking/unlocking LED indicator button on the dashboard.
- Introduce the metal insert of the ignition key in the front door pawl.
- Pull the internal door handle.

SEATS

Seats are a part of the Occupant Restraint System of the vehicle.

WARNING!

- **It is dangerous to ride in a cargo area, inside or outside of a vehicle. In a collision, people riding in these areas are more likely to be seriously injured or killed.**
- **Do not allow people to ride in any area of your vehicle that is not equipped with seats and seat belts. In a collision, people riding in these areas are more likely to be seriously injured or killed.**
- **Be sure everyone in your vehicle is in a seat and using a seat belt properly.**

Manual Front Seats

Forward And Rearward Adjustment

The adjusting bar is at the front of the driver seat, near the floor. Pull the bar upward to move the seat forward or rearward. Release the bar once the seat is in the desired position. Then, using body pressure, move forward and rearward on the seat to be sure that the seat adjusters have latched.

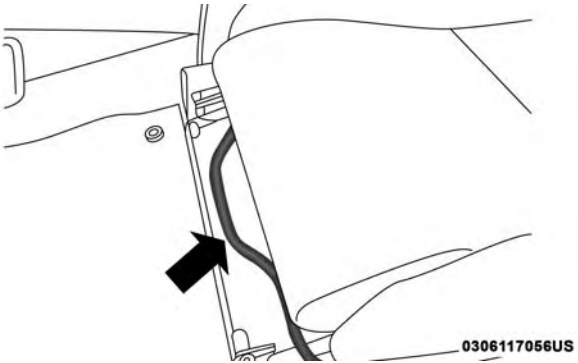

Seat Adjustment Bar

Seat Height Adjustment

In order to achieve the ideal driving position, the height of the seats can also be adjusted. Tools are required to make this height adjustment. Contact your authorized dealership.

Recliner Adjustment

The recliner lever is located on the outboard side of the seat. To recline the seat, lean forward slightly, pull the recliner lever upward, lean backward until the seat is in the desired position, and release the lever. To return the seat to its full upright position, lean forward, pull the recliner lever upward and hold it until the seat returns to its full upright position.

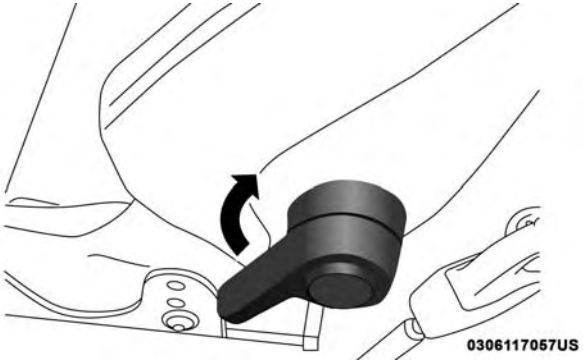

Recline Lever

WARNING!

- **Adjusting a seat while driving may be dangerous. Moving a seat while driving could result in loss of control which could cause a collision and serious injury or death.**
- **Seats should be adjusted before fastening the seat belts and while the vehicle is parked. Serious injury or death could result from a poorly adjusted seat belt.**

(Continued)

WARNING! ***(Continued)***

- **Do not ride with the seatback reclined so that the shoulder belt is no longer resting against your chest. In a collision you could slide under the seat belt, which could result in serious injury or death.**

HEAD RESTRAINTS

Non-Adjustable Head Restraints

The non-adjustable head restraints are form fitted into the upper structure of the seatback, and are designed to reduce the risk of injury by restricting head movement in the event of a rear impact. The seatback should be properly adjusted to an upright position where the head restraint is positioned as close as possible to the back of the occupant's head.

WARNING!

Be certain that the seatback is securely locked into position. If the seatback is not securely locked into position the seat will not provide the proper stability for child seats and/or passengers. An improperly latched seat could cause serious injury.

STEERING WHEEL

Tilt/Telescoping Steering Column

This feature allows you to tilt the steering column upward or downward. It also allows you to lengthen or shorten the steering column. The tilt/telescoping control handle is located below the steering wheel at the end of the steering column.

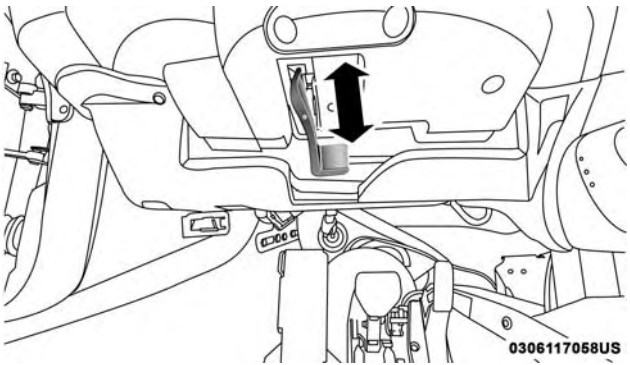

Tilt/Telescoping Column Lever

To unlock the steering column, push the lever downward (toward the floor). To tilt the steering column, move the steering wheel upward or downward as desired. To lengthen or shorten the steering column, pull the steering wheel outward or push it inward as desired. To lock the steering column in position, push the lever upward until fully engaged.

WARNING!

Do not adjust the steering column while driving. Adjusting the steering column while driving or driving with the steering column unlocked, could cause the driver to lose control of the vehicle. Failure to follow this warning may result in serious injury or death.

MIRRORS

Inside Day/Night Mirror

A single ball joint mirror is provided in the vehicle. It is a twist on mirror that has a fixed position at the windshield. The mirror installs on the windshield button with a counterclockwise rotation and requires no tools for mounting. The mirror head can be adjusted up, down, left, and right for various drivers. The mirror should be adjusted to center on the view through the rear window.

Headlight glare from vehicles behind you can be reduced by moving the small control under the mirror to the night position (toward the rear of the vehicle). The mirror should be adjusted while the small control under the mirror is set in the day position (toward the windshield).

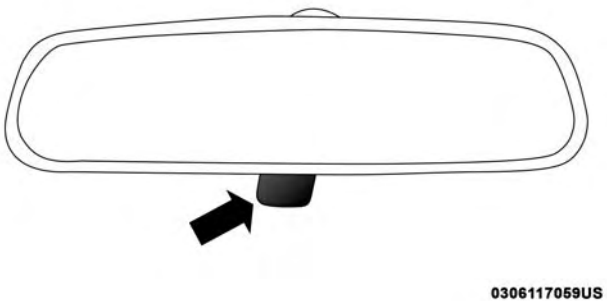

Adjusting Rearview Mirror

Outside Mirrors

To receive maximum benefit, adjust the outside mirrors to center on the adjacent lane of traffic and a slight overlap of the view obtained from the inside mirror.

NOTE: The passenger side convex outside mirror will give a much wider view to the rear, and especially of the lane next to your vehicle.

WARNING!

Vehicles and other objects seen in the passenger side convex mirror will look smaller and farther away than they really are. Relying too much on your passenger side convex mirror could cause you to collide with another vehicle or other object. Use your inside mirror when judging the size or distance of a vehicle seen in the passenger side convex mirror.

Power Mirrors

The power mirror controls are located on the center console.

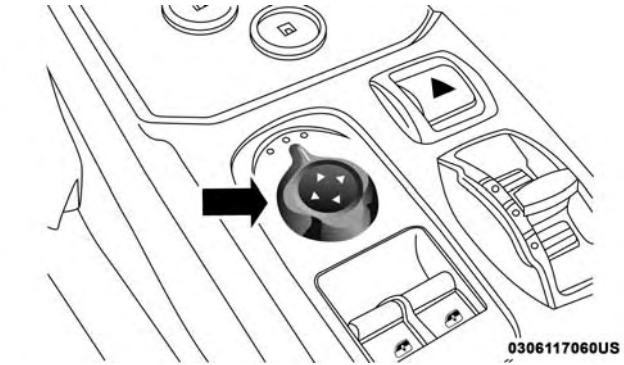

Power Mirror Control

The power mirror controls consist of a mirror select knob and a four-way mirror control switch. To adjust a mirror, turn the power mirror control knob to the left or right to select the mirror that you want to adjust.

Using the mirror control switch, push on any of the four arrows for the direction that you want the selected mirror to move.

Folding Mirrors

The exterior mirrors are hinged to allow the mirror to pivot forward or rearward to help avoid damage. The mirror has three detent positions: full forward, full rearward and normal.

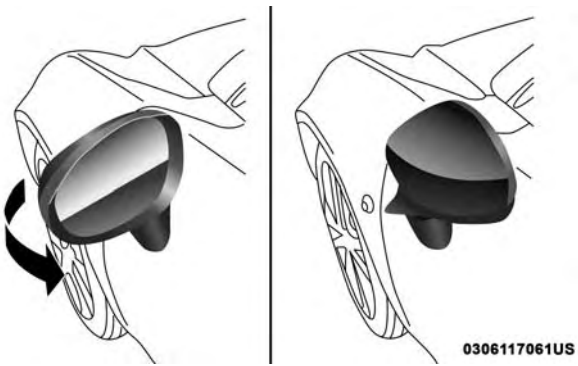

Folding Mirrors

Heated Mirrors

These mirrors are heated to melt frost or ice. This feature can be activated whenever you turn on the mirror defroster. The Door Demist/Defrost button is located in the switch bank above the Climate Controls.

EXTERIOR LIGHTS

Multifunction Lever

The multifunction lever, located on the left side of the steering wheel, controls the operation of the headlights, headlight high beams, lane change assist and turn signals.

NOTE: The external lights can only be turned on with the ignition in the ON/RUN position.

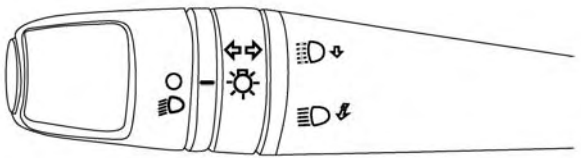

0312105902US

Multifunction Lever

Headlights

Rotate the end of the multifunction lever upward to the first detent for headlight operation.

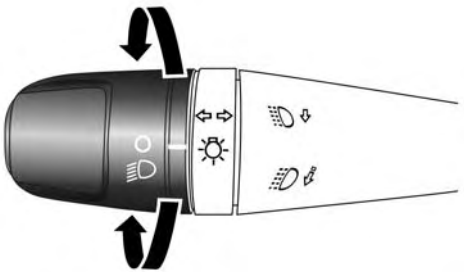

0306117062US

Headlight Operation

NOTE: When the headlights are turned on, the Daytime Running Lights will be deactivated.

Daytime Running Lights

To activate the Daytime Running Lights (DRL), rotate the end of the multifunction lever to the **O** symbol.

NOTE: The low beams and side/tail lights will not be on with DRL.

High Beams

With the low beams activated, pull the multifunction lever towards the steering wheel to turn on the high beams. A high beam symbol will illuminate in the cluster to indicate the high beams are on. Pull the multifunction lever a second time to switch the headlights back to low beam.

Flash-To-Pass

You can signal another vehicle with your headlights by partially pulling the multifunction lever toward the steering wheel. This will cause the high beam headlights to turn on until the lever is released.

Parking Lights

To turn on the parking lights, remove the key or turn the ignition to OFF/LOCK position and turn on the headlights.

Follow Me Home/Headlight Delay

When this feature is selected, the driver can choose to have the headlights remain on for a preset period of time after the engine is turned OFF.

Activation

Remove the key or turn the ignition to the STOP (OFF/LOCK) position, and pull the multifunction lever toward the steering wheel within two minutes. Each time the lever is pulled, the activation of the lights will be extended by 30 seconds. The activation of the lights can be extended to a maximum of 210 seconds.

Deactivation

Pull the multifunction lever toward the steering wheel and hold it for more than two seconds.

Turn Signals

Move the multifunction lever up or down and the arrows on each side of the instrument cluster flash to show proper operation of the front and rear turn signal lights.

NOTE: If either light remains on and does not flash, or there is a very fast flash rate, check for a defective outside light bulb. If an indicator fails to light when the lever is moved, it would suggest that the indicator bulb is defective.

Lane Change Assist

Tap the lever up or down once, without moving beyond the detent, and the turn signal (right or left) will flash five times then automatically turn off.

INTERIOR LIGHTS

Interior Light

The interior light is located in the headliner in between the sun visors. The interior light can be set to three different positions (off/left position, center position, on/right position).

Using the interior light lens, push the lens to the right from its center position and the lights are always on. Push the lens to the left from its center position and the lights are always off. Leave the lens in the center position, and the light is turned on and off when the doors are opened or closed.

CAUTION!

Before getting out of the vehicle be sure that the Overhead Dome Lamp is in the center position or that the lights are off to avoid draining the battery.

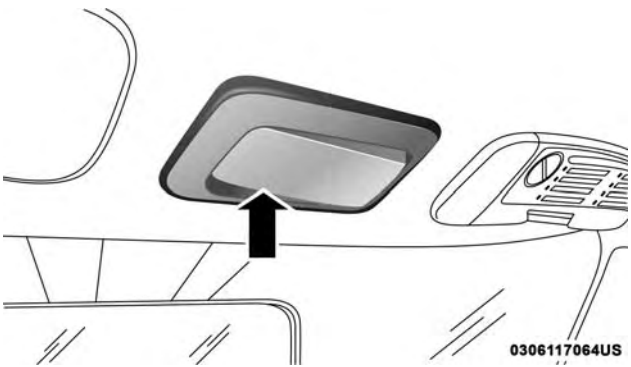

Interior Light (Off Position Shown)

Interior Light Timing (Center Position)

There are four different modes of operation that can be activated in this position:

- When one door is opened, a three minute timer is activated.
- When the key is removed from the ignition (within two minutes of the ignition being turned OFF), a 10 second timer is activated.
- When the doors are unlocked with the key fob, a 10 second timer is activated.
- When the doors are locked with the key fob, the lights will turn off.

Dimmer Controls

The dimmer controls are located on the left side of the instrument panel below the instrument cluster.

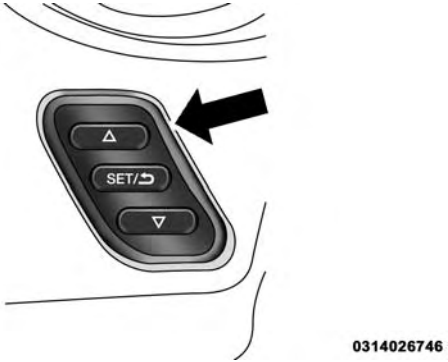

Dimmer Controls

Pushing the up or down arrow will increase or decrease the brightness of the instrument panel lights.

WINDSHIELD WIPERS AND WASHERS

The windshield wiper/washer controls are located on the windshield wiper/washer lever on the right side of the steering column. The front wipers are operated by rotating the end of the lever.

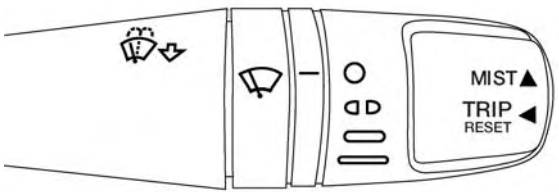

0312105900US

Windshield Wiper/Washer Lever

Windshield Wiper Operation

Rotate the end of the lever upward, to the first detent past the intermittent settings for low-speed wiper operation. Rotate the end of the lever upward to the second detent past the intermittent settings for high-speed wiper operation.

Intermittent Wiper System

Use the intermittent wiper when weather conditions require a single wiping cycle with a variable pause between cycles. To activate, rotate the end of the multifunction lever upward to the first detent position for the first delay interval setting. Continue to rotate the end of the lever to the other detents for the other delay intervals that depend on the vehicle speed.

Windshield Washers

To use the washer, pull the lever toward you and hold while spray is desired. If the lever is pulled while in the delay range, the wiper will start and continue to operate for three wipe cycles after the lever is released, and then resume the intermittent interval previously selected.

If the lever is pulled while in the O (off) position, the wipers will operate for three wipe cycles and then turn off.

WARNING!

Sudden loss of visibility through the windshield could lead to a collision. You might not see other vehicles or other obstacles. To avoid sudden icing of the windshield during freezing weather, warm the windshield with the defroster before and during windshield washer use.

Mist

Use the Mist feature when weather conditions make occasional usage of the wipers necessary. Push the lever upward to the MIST position and release for a single wiping cycle.

NOTE: The Mist feature does not activate the washer pump; therefore, no washer fluid will be sprayed on the windshield. The wash function must be used in order to spray the windshield with washer fluid.

CLIMATE CONTROLS

The Climate Control System allows you to regulate the temperature, air flow, and direction of air circulating throughout the vehicle. The controls are located on the instrument panel below the radio.

Climate Controls Overview

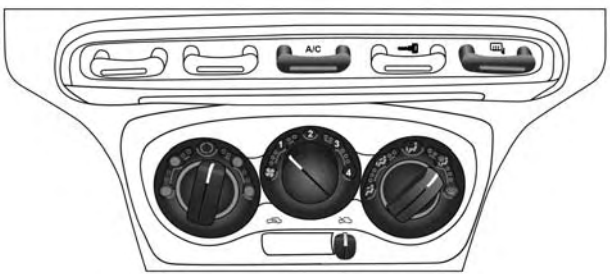

0456104964NA

Climate Controls

Climate Control Descriptions

Icon	Description
	A/C Button Press and release to change the current setting, the indicator illuminates when A/C is on. Performing this function again will cause the A/C operation to switch into manual mode and the A/C indicator will turn off. **MAX A/C** For maximum cooling, use the A/C and recirculation modes at the same time. **ECONOMY MODE** If economy mode is desired, press the A/C switch to turn off the A/C compressor. Then, rotate the temperature control to the desired temperature.
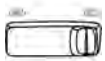	**Recirculation And Out Side Air Knob** Slide this knob over to one of the two settings to change the system between recirculation mode and outside air mode. Recirculation can be used when outside conditions such as smoke, odors, dust, or high humidity are present. **NOTE:** • Continuous use of the Recirculation mode may make the inside air stuffy and window fogging may occur. Extended use of this mode is not recommended. • The use of the Recirculation mode in cold or damp weather could cause windows to fog on the inside, because of moisture buildup inside the vehicle. Select the outside air position for maximum defogging. • Recirculation can be used in all modes except for Defrost. • The A/C can be deselected manually without disturbing the mode control selection.

Icon	Description
	Demist/Defrost Button Push and release the Demist/Defrost button to turn on the outside mirror defroster. An indicator will illuminate when the outside mirror defroster is on. The outside mirror defroster automatically turns off after 20 minutes.
	Temperature Control Knob Temperature control is used to regulate the temperature of the air forced through the climate system. The temperature can be selected using the temperature control knob on the faceplate. The temperature increases as you turn the temperature control knob clockwise. The temperature decreases as you turn the temperature control knob counterclockwise.
	Blower Control Knob Blower control is used to regulate the amount of air forced through the climate system. The speeds can be selected by rotating the blower control knob on the faceplate clockwise, or counterclockwise. The larger the number of the setting, the faster the blower speed.
	Mode Control Knob Mode control is used to regulate the mode airflow is distributed into the cabin. The airflow distribution mode can be adjusted so air comes from the instrument panel outlets, floor outlets, defrost outlets and demist outlets.
Panel Mode	**Panel Mode** Air comes from the outlets in the instrument panel. Each of these outlets can be individually adjusted to direct the flow of air. The air vanes of the center outlets and outboard outlets can be moved up and down or side to side to regulate airflow direction.

Icon	Description
Bi-Level Mode	**Bi-Level Mode** Air comes from the instrument panel outlets and floor outlets. A slight amount of air is directed through the defrost and side window demister outlets. **NOTE:** BI-LEVEL mode is designed under comfort conditions to provide cooler air out of the panel outlets and warmer air from the floor outlets.
Floor Mode	**Floor Mode** Air comes from the floor outlets. A slight amount of air is directed through the defrost and side window demister outlets.
Mix Mode	**Mix Mode** Air is directed through the floor, defrost, and side window demister outlets. This setting works best in cold or snowy conditions that require extra heat to the windshield. This setting is good for maintaining comfort while reducing moisture on the windshield.
FRONT	**Front Defrost Mode** Air comes from the windshield and side window demist outlets. When the defrost mode is selected, the blower level will increase. Use Defrost mode with maximum temperature settings for best windshield and side window defrosting and defogging.

Climate Control Functions

Heating

To heat the passenger compartment, proceed as follows:

1. Rotate the Temperature Control to the red section.
2. Turn the Blower Control to the desired speed.
3. Turn the Mode Control to .
4. Then operate the controls to maintain the desired comfort conditions.

NOTE:

- This air distribution allows the passenger compartment to be heated quickly.
- When the engine is cold, it takes a few minutes to achieve optimum passenger compartment heating.

Fast Demisting/Defrosting Of Windshield And Side Windows

Proceed as follows:

1. Rotate the Temperature Control to the red section.
2. Turn the Blower Control to 4 (maximum fan speed).
3. Turn the Mode Control to .
4. Move the Recirculation Control to .

After demisting/defrosting, operate the controls as normal to restore the required comfort conditions.

NOTE: The climate control system is very useful for speeding up and maintaining demisting since it dehumidifies the air. Adjust the controls as described previously and switch on the climate control system by pressing the A/C button.

Window Demisting

In the event of considerable external moisture and/or rain and/or large differences in temperature inside and outside the passenger compartment, perform the following preventive window demisting procedure:

1. Move the Recirculation Control to .
2. Rotate the Temperature Control to the red section.
3. Turn the Blower Control to 2 (intermediate fan speed).
4. Turn the Mode Control to with the possibility of moving it to position if window misting does not occur.

Ventilation

To ventilate the passenger compartment properly, proceed as follows:

1. Fully open the vents and direct them appropriately.
2. Rotate the Temperature Control to the blue section.
3. Move the Recirculation Control to .
4. Turn the Blower Control to the desired speed.
5. Turn the Mode Control to .

Internal Air Recirculation Activation

- Move the Recirculation Control to .

It is advisable to switch the internal air recirculation on while standing in queues or in tunnels to prevent the introduction of polluted air.

Do not use the function for a long time, particularly if there are two people on board, to prevent the windows from misting.

NOTE: The internal air recirculation system makes it possible to reach the required heating or ventilation conditions more quickly. Do not use the internal air recirculation function on rainy/cold days to avoid the possibility of the windows misting.

Climate Control

Proceed as follows:

1. Rotate the Temperature Control to the blue section.
2. Turn the Blower Control to 1 (1st fan speed). For rapid cooling, turn Blower Control to 4 (maximum fan speed).
3. Move the Recirculation Control to .
4. Turn the Mode Control to .
5. Press the A/C button.

Cooling Adjustment

Proceed as follows:

1. Move the Recirculation Control to .
2. Rotate the Temperature Control towards the red section to increase the temperature.
3. Turn the Blower Control counterclockwise to reduce the fan speed.

Door Mirror Demisting

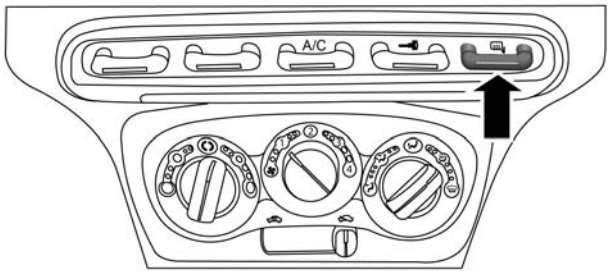

Demist/Defrost Button

- Press the button to activate this function.
- Press the button again to deactivate the function.

Activation is indicated by the digital warning light on the display.

System Maintenance

In winter, the climate control system must be turned on at least once a month for about ten minutes. Have the system inspected at an authorized dealer before the summer.

NOTE: The system uses R-1234yf coolant which does not pollute the environment in the event of accidental leakage. Under no circumstances should you use R-134a fluid which, in addition to being incompatible with the system's components, contributes greatly to the greenhouse effect.

WINDOWS

Power Windows

NOTE:

- These operate when the ignition key is turned to MAR/ON/RUN and for about three minutes after the ignition key is turned to STOP or removed unless one of the doors is opened.
- The buttons are located on the center console.

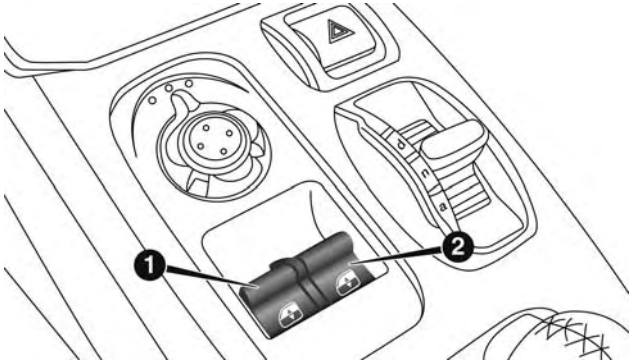

Power Window Switch

1 — Driver Power Window Switch
2 — Passenger Power Window Switch

Push/pull the corresponding buttons to open/close the desired window.

When one of the two buttons is pushed briefly, the window moves in stages; if the button is held down to open, "continuous automatic" operation is activated.

If the button is pushed again, the window will stop in its current position. If the button is pushed for several seconds, the window lowers automatically (only with ignition key in MAR/ON/RUN position).

Continuous Automatic Operation

This is activated by pushing one of the two buttons for longer than half a second. The window will stop when it is fully opened, or when the button is pushed again.

It can be used on both the driver side and passenger side, only for lowering the window.

Electric Window System Reset

After a break in power supply for the control units (battery replaced or disconnected or protective fuses for the electric window control units replaced), the automatic operation of the windows must be restored.

The restoration procedure must be performed as described below with the doors closed:

1. Completely open the driver's door window keeping the operating button pushed for at least three seconds after the (lower) end of travel position is reached.
2. Completely raise the driver side window and hold the button down for at least three seconds once the (upper) end of travel position has been reached.

3. Proceed in the same way as described in points 1 and 2 for the passenger side door.
4. Make sure that the reset is correct by checking that the windows work automatically.

WARNING!

Improper actuation of the power windows may be dangerous. Never leave children unattended in a vehicle, and do not let children play with power windows. Before and during window operation make sure no one and no object (including clothing) is in the path of the moving glass or its mechanism. Do not leave the Key Fob in or near the vehicle, or in a location accessible to children. Occupants, particularly unattended children, can become entrapped by the windows while operating the power window switches. Such entrapment may result in serious injury or death.

DECKLID

To Open The Decklid

CAUTION!

- **To prevent possible damage, do not slam the decklid to close it. Use a firm downward push at the center of the decklid to ensure the decklid latch is fully engaged.**
- **During normal vehicle operation, the luggage compartment (located rear of the engine) can reach temperatures above 149 °F (65 °C). Do not transport objects in the luggage compartment that may be damaged at such temperatures. Do not place aerosol cans in the luggage compartment.**

To open the decklid:

1. Open the driver's side door.

2. Pull the decklid release lever located on the rear of the driver's door sill.

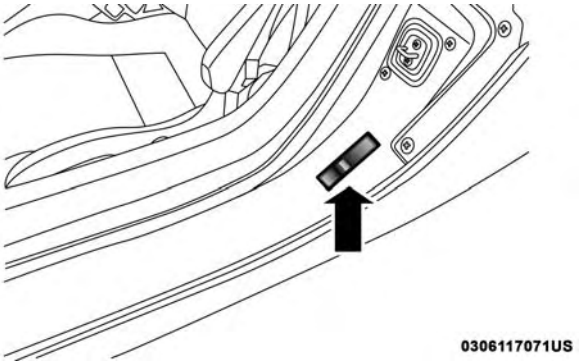

Decklid Release Lever

3. Move to the rear of the vehicle and lift the decklid.

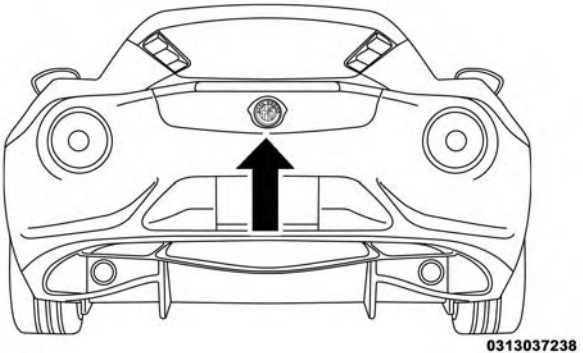

Decklid Lift Point Location

4. Lift upward on the decklid prop rod to release it from the stowage retainer.

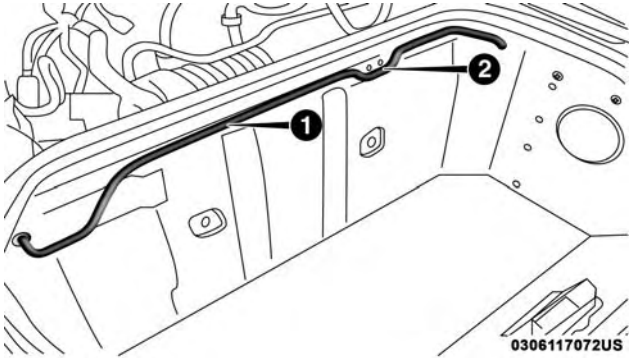

Decklid Prop Rod Location

1 — Decklid Prop Rod
2 — Stowage Retainer Location

5. Place the decklid prop rod in the decklid slot to secure the decklid in the open position.

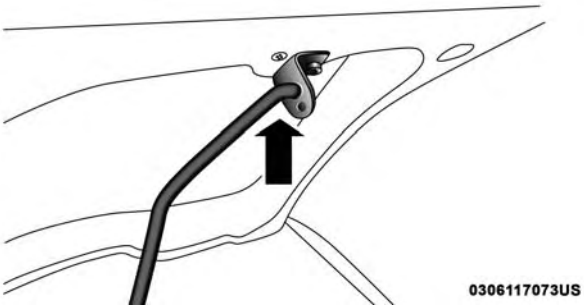

Decklid Prop Rod Slot

WARNING!

- **The maximum load limit for the luggage compartment, in addition to the kits provided, is 33.1 lbs. (15kg). Do not exceed the maximum permitted load in the luggage compartment. When accessing the rear luggage compartment, do not come into contact with engine, or other components, that may be hot and could burn you if touched.**

(Continued)

WARNING! ***(Continued)***

- **Access the luggage compartment only with the vehicle stationary. Before exiting the vehicle, you should always place the vehicle into FIRST gear or REVERSE, apply the parking brake, and remove the key from the ignition. Never leave the key fob in the vehicle or in a location accessible to children.**
- **The decklid may drop suddenly, causing serious injury, if the supporting rod is not positioned correctly.**
- **The decklid must always be closed properly, and the lock engaged, while the vehicle is in motions.**

To Close The Decklid

1. Hold the decklid up with one hand and use the other to remove rod from housing and reinsert it in its locking device.
2. Lower the decklid approximately 7.8 inches (20 cm) from the engine compartment and let it drop. Make sure that the decklid is completely closed and not only fastened in safety position by trying to open it. If it is not completely closed, do not push the decklid down, but raise it and repeat the procedure.

NOTE: Always check that the decklid is closed correctly to prevent it from opening while the vehicle is travelling.

WARNING!

- **The maximum load limit for the luggage compartment, in addition to the kits provided, is 33.1 lbs. (15kg). Do not exceed the maximum permitted load in the luggage compartment. When accessing the rear luggage compartment, do not come into contact with engine, or other components, that may be hot and could burn you if touched.**
- **Access the luggage compartment only with the vehicle stationary. Before exiting the vehicle, you should always place the vehicle into FIRST gear or REVERSE, apply the parking brake, and remove the key from the ignition. Never leave the key fob in the vehicle or in a location accessible to children.**
- **The decklid may drop suddenly, causing serious injury, if the supporting rod is not positioned correctly.**
- **The decklid must always be closed properly, and the lock engaged, while the vehicle is in motions.**

INTERNAL EQUIPMENT

Storage

Seatback Storage

Located in the back of both the driver and passenger front seats are pockets that can be used for storage.

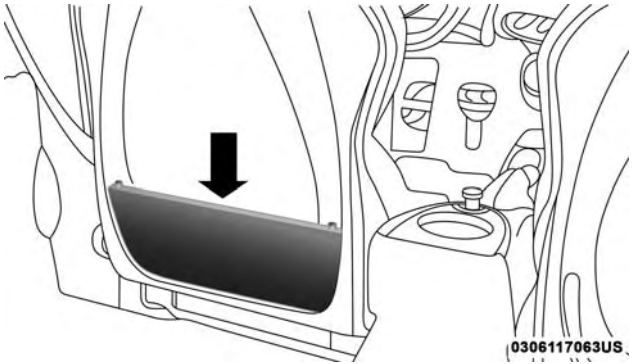

Drivers Side Seatback Storage

Console Storage

There is a cargo pouch storage area located between the driver and passengers seat.

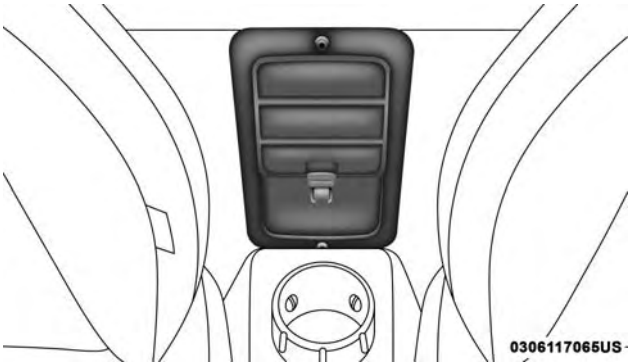

Cargo Pouch Storage Location

Rear Compartment Storage

CAUTION!

- **To prevent possible damage, do not slam the decklid to close it. Use a firm downward push at the center of the decklid to ensure the decklid latch is fully engaged.**
- **During normal vehicle operation, the luggage compartment (located rear of the engine) can reach temperatures above 149 °F (65 °C). Do not transport objects in the luggage compartment that may be damaged at such temperatures. Do not place aerosol cans in the luggage compartment.**

Your vehicle is equipped with a storage area located under the decklid.

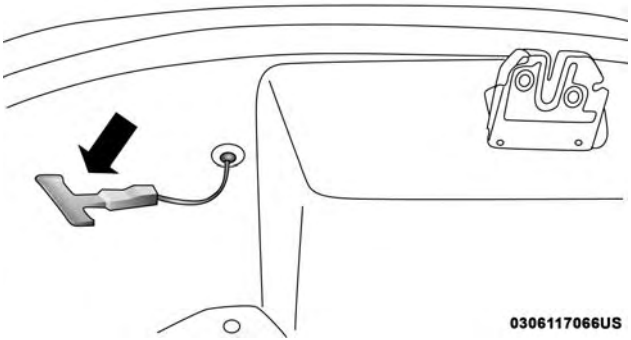

Decklid Emergency Release

WARNING!

Do not allow children to have access to rear storage compartment. Always close the decklid when your vehicle is unattended. Once in the rear storage compartment, young children may not be able to escape. If trapped in the rear compartment, children can die from suffocation or heat stroke.

As a security measure, an internal decklid emergency release lever is built into the rear compartment storage latching mechanism. In a event of a person trapped inside the storage compartment, the decklid can be simply opened by pulling on the phosphorescent handle attached to the decklid latching mechanism.

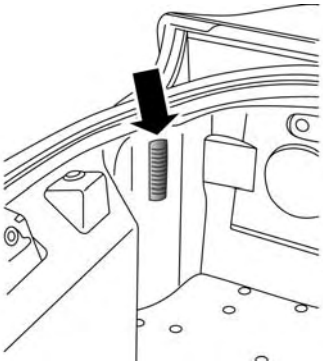

Rear Compartment Light

WARNING!

- **The maximum load limit for the luggage compartment, in addition to the kits provided, is 33.1 lbs. (15kg). Do not exceed the maximum permitted load in the luggage compartment. When accessing the rear luggage compartment, do not come into contact with engine, or other components, that may be hot and could burn you if touched.**
- **Access the luggage compartment only with the vehicle stationary. Before exiting the vehicle, you should always place the vehicle into FIRST gear or REVERSE, apply the parking brake, and remove the key from the ignition. Never leave the key fob in the vehicle or in a location accessible to children.**
- **The decklid may drop suddenly, causing serious injury, if the supporting rod is not positioned correctly.**
- **The decklid must always be closed properly, and the lock engaged, while the vehicle is in motions.**

Cupholder

A cupholder is located in the rear of the center console.

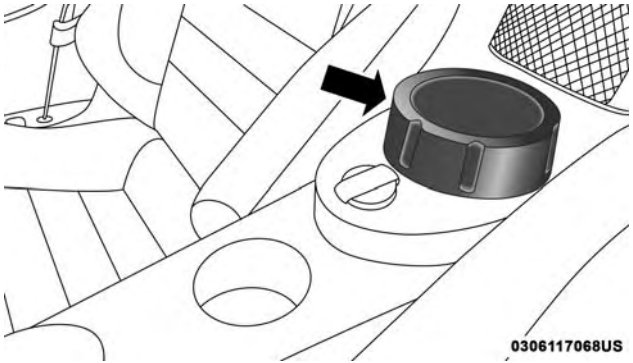

Center Console Cupholder

Power Outlets

Your vehicle is equipped with a 12 Volt (13 Amp) power outlet that can be used to power cellular phones, small electronics and other low powered electrical accessories.

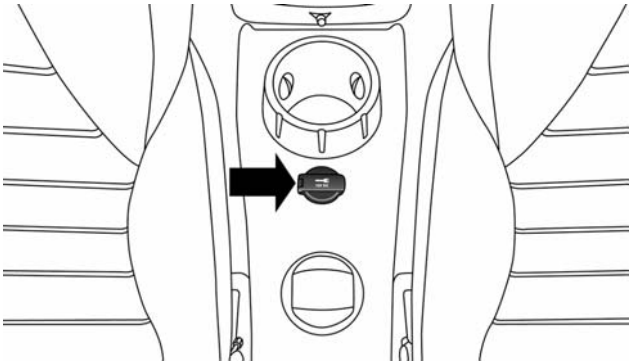

Front Power Outlet

The power outlet is located on the central tunnel, between the two cup holders. It only operates with the ignition key at MAR/ON.

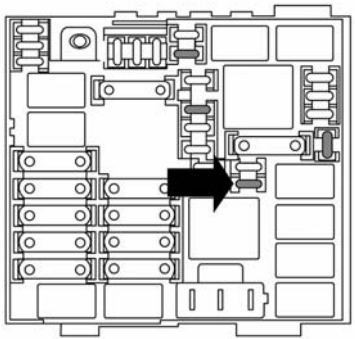

Power Outlet Fuse Location

WARNING!

To avoid serious injury or death:

- **Only devices designed for use in this type of outlet should be inserted into any 12 Volt outlet.**
- **Do not touch with wet hands.**
- **Close the lid when not in use and while driving the vehicle.**

(Continued)

WARNING! ***(Continued)***

- **If this outlet is mishandled, it may cause an electric shock and failure.**

CAUTION!

- **Many accessories that can be plugged in draw power from the vehicle's battery, even when not in use (i.e., cellular phones, etc.). Eventually, if plugged in long enough, the vehicle's battery will discharge sufficiently to degrade battery life and/or prevent the engine from starting.**
- **Accessories that draw higher power (i.e., coolers, vacuum cleaners, lights, etc.) will degrade the battery even more quickly. Only use these intermittently and with greater caution.**
- **After the use of high power draw accessories, or long periods of the vehicle not being started (with accessories still plugged in), the vehicle must be driven a sufficient length of time to allow the generator to recharge the vehicle's battery.**

(Continued)

CAUTION! *(Continued)*

- **Do not exceed the maximum power of 180 Watts (15 Amps) at 12 Volts. If the 180 Watts (15 Amps) power rating is exceeded, the fuse protecting the system will need to be replaced.**
- **Power outlets are designed for accessory plugs only. Do not insert any other object in the power outlets as this will damage the outlet and blow the fuse. Improper use of the power outlet can cause damage not covered by your New Vehicle Limited Warranty.**

GETTING TO KNOW YOUR INSTRUMENT PANEL

CONTENTS

■ INSTRUMENT CLUSTER 54
- □ Instrument Cluster Descriptions 55

■ INSTRUMENT CLUSTER DISPLAY 56
- □ Location And Controls. 56
- □ Change Engine Oil Indicator System 58
- □ Display Menu Items 59
- □ Values Displayed 66

■ TRIP COMPUTER 67
- □ Trip Button 68
- □ Trip Functions 68
- □ New Trip 69
- □ Start Of Trip Procedure 69
- □ Exit Trip 69

■ WARNING LIGHTS AND MESSAGES. 69
- □ Red Warning Lights. 69
- □ Yellow Warning Lights. 73
- □ Green Indicator Lights 77
- □ Blue Indicator Lights 77

■ ONBOARD DIAGNOSTIC SYSTEM — OBD II . . .77
- □ Onboard Diagnostic System (OBD II) Cybersecurity 78

■ EMISSIONS INSPECTION AND MAINTENANCE PROGRAMS 79

INSTRUMENT CLUSTER

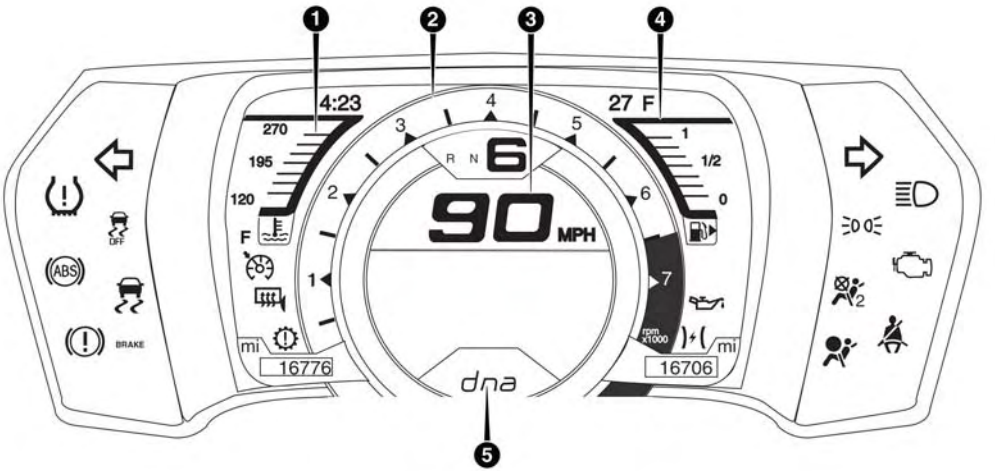

Instrument Cluster

Instrument Cluster Descriptions

1. Temperature Gauge
   - The temperature gauge shows engine coolant temperature. Any reading within the normal range indicates that the engine cooling system is operating satisfactorily.
   - The digital gauge will likely indicate a higher temperature when driving in hot weather, or up mountain grades. It should not be allowed to exceed the upper limits of the normal operating range.

NOTE: Driving with a hot engine cooling system could damage your vehicle. The digital warning light may switch on (together with a message on the display) to indicate that the coolant temperature is too high; in this case, stop the engine and contact a dedicated authorized dealership.

WARNING!

A hot engine cooling system is dangerous. You or others could be badly burned by steam or boiling coolant. You may want to call an authorized dealer

(Continued)

WARNING! *(Continued)*

for service if your vehicle overheats. If you decide to look under the hood yourself, see "Servicing And Maintenance." Follow the warnings under the Cooling System Pressure Cap paragraph.

2. Tachometer
   - This gauge measures engine revolutions per minute (RPM x 1000). Before the pointer reaches the red area, ease up on the accelerator to prevent engine damage.
3. Speedometer
   - Indicates vehicle speed.
4. Fuel Gauge
   - The digital display shows the amount of fuel in the tank.
   - The switching on of the digital warning light indicates that 1 – 1.3 gallons of fuel are left in the tank; in this situation, refuel as soon as possible.
   - Do not travel with the fuel tank almost empty; any gaps in fuel delivery could damage the catalytic converter.
   - The fuel pump symbol points to the side of the vehicle where the fuel door is located.

5. "Alfa DNA" Driving Mode Indicator
   - This area of the cluster displays which driving mode the vehicle is currently in. A letter (d, n, or a) corresponding to the active driving mode (dynamic or race, natural, all weather) and a dedicated message is shown on the display.

NOTE: The hard telltales will illuminate for a bulb check when the ignition is first cycled.

INSTRUMENT CLUSTER DISPLAY

Your vehicle may be equipped with an instrument cluster display, which offers useful information to the driver. With the ignition in the STOP/OFF mode, opening/closing of a door will activate the display for viewing, and display the total miles, or kilometers, in the odometer. Your instrument cluster display is designed to display important information about your vehicle's systems and features. Using a driver interactive display located on the instrument panel, your instrument cluster display can show you how systems are working and give you warnings when they aren't. The steering wheel mounted controls allow you to scroll through and enter the main menus and submenus. You can access the specific information you want and make selections and adjustments.

Location And Controls

Your vehicle is equipped with an instrument cluster display, which offers useful information to the driver. With the ignition in the STOP (OFF/LOCK) position (and the key removed, for vehicles with mechanical key), opening/closing of a door will activate the display for viewing, and display the total miles or kilometers in the odometer. Your instrument cluster display is designed to display important information about your vehicle's systems and features. Using a driver interactive display located on the instrument panel, your instrument cluster display can show you how systems are working and give you warnings when they aren't. The steering wheel mounted controls allow you to scroll through and enter the main menus and submenus. You can access the specific information you want and make selections and adjustments.

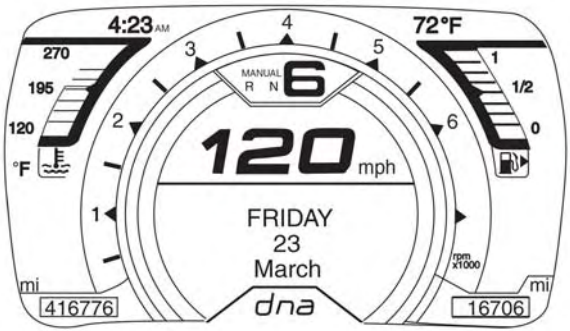

Instrument Cluster Display

The instrument cluster display features a driver-interactive display that is located in the instrument cluster.

The instrument cluster display consists of the following:

- Digital Speedometer
- Vehicle Info
- Fuel Economy Info
- Trip Info
- Screen Setup
- Vehicle Settings

The system allows the driver to select information by pushing the following buttons mounted on the instrument panel to the left of the steering column:

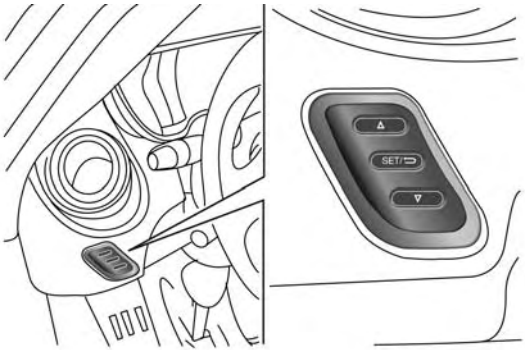

Instrument Cluster Display Control Buttons

- *Up Arrow Button*

△ Push and release the **up** arrow button to scroll upward through the main menu and sub-menus or to increase the displayed value. Outside of the menu, the **up** arrow will adjust the brightness of the instrument panel.

- *Down Arrow Button*

▽ Push and release the **down** arrow button to scroll downward through the main menu and submenus or to decrease the displayed value. Outside of the menu, the **down** arrow will adjust the brightness of the instrument panel.

- *Set/Back Arrow Button*

Push and release the **SET/BACK** arrow button to access/select the information screens or submenu screens of a main menu item. Push and hold the **SET/BACK** arrow button to return to the main menu from an info screen or submenu item.

Change Engine Oil Indicator System

Your vehicle is equipped with an engine oil change indicator system. The "Change Engine Oil" message will flash in the instrument cluster display for approximately ten seconds and the oil pressure warning light will illuminate. The "Change Engine Oil" message in the instrument cluster display and the oil pressure warning light will turn off after approximately ten seconds.

Reset the Oil Change Reminder message as follows:

1. Without pushing the brake pedal, cycle the ignition to the MAR/ON/RUN position (do not start the engine).
2. Push and hold the accelerator pedal.
3. Push and release the brake pedal six times; with a one second pause between each push of the brake pedal.
4. After the 6th release of the brake pedal, pause one second and then release the accelerator pedal.

NOTE: Consult your authorized dealer if the oil change indicator message does not reset.

Display Menu Items

The menu comprises a series of functions arranged in a cycle. Push the **up** and **down** arrow buttons to access the different options and settings (setup).

The setup menu can be activated by pushing the **SET/BACK** button. Single push on the **up** or **down** arrow button will scroll through the setup menu options. The menu includes the following functions:

- Menu
- Speed Buzzer
- Trip B/Data
- Set Time
- Set Date
- Autoclose
- Units
- Language
- Buzzer Volume
- Service
- Daylights (D.R.L.) – If Equipped
- Exit Menu

Selecting An Option Of The Main Menu Without Submenu

1. Briefly push the **SET/BACK** button to select the main menu option to set.
2. Push the **up** or **down** arrow button (by a single push) to select the new setting.
3. Briefly push the **SET/BACK** button to store the new setting and go back to the main menu option previously selected.

Selecting An Option Of The Main Menu With Submenu

1. Briefly push the **SET/BACK** button to display the first submenu option.
2. Push the **up** or **down** arrow button (by a single push) to scroll through all the submenu options.
3. Briefly push the **SET/BACK** button to select the displayed submenu option and to open the relevant setup menu.
4. Push the **up** or **down** arrow button (by a single push) to select the new setting for this submenu option.

5. Briefly push the **SET/BACK** button to store the new setting and go back to the previously selected sub-menu option.
6. Push and hold the **SET/BACK** button to return to the main menu (short hold) or the main screen (longer hold).

Speed Buzzer (Speed Limit)

With this function, it is possible to set the vehicle speed limit (MPH or km/h) to immediately alert the driver when the set limit is exceeded.

To set the speed limit, proceed as follows:

1. Briefly push the **SET/BACK** button. The display will show the message (Speed Buzzer).
2. Push and release the **up** or **down** arrow button to select speed limit activation (On) or deactivation (Off).
3. When the function is activated (On), briefly push the **SET/BACK** button to display the previously set speed. Pushing the **up** or **down** arrow buttons selects the speed limit. Push **SET/BACK** to confirm selection.

NOTE: The setting can be increased or decreased by 5 MPH or km/h each time the **up** or **down** arrow button is pushed for speed settings above 20 MPH (32 km/h). To increase or decrease the set speed rapidly, push and hold the **up** or **down** arrow button. Save the setting by briefly pushing the button when you approach the required setting.

Briefly push the **SET/BACK** button to go back to the menu screen, or push and hold the **SET/BACK** button (approximately one second) to go back to the main screen without storing the settings.

To cancel the setting, proceed as follows:

1. Briefly push the **SET/BACK** button. “On” will display.
2. Push and release the **down** button. “Off” will display.
3. Briefly push the **SET/BACK** button to go back to the menu screen, or push and hold the **SET/BACK** button (approximately one second) to go back to the main screen without storing the settings.

Trip B Activation

Through this option, it is possible to activate (On) or deactivate (Off) the Trip B (partial trip) display.

For further information, see "Trip Computer."

For activation/deactivation, proceed as follows:

1. Briefly push the **SET/BACK** button. "On" or "Off" will display in the instrument cluster display (according to previous setting).
2. Push and release the **up** or **down** arrow button to select the setting and once selected a beep will occur to signal the setting is saved.
3. Briefly push the **SET/BACK** button to go back to the menu screen, or push and hold the **SET/BACK** button (approximately one second) to go back to the main screen without storing the settings.

Set Time

This function may be used to set the clock through two submenu items: "Time" and "Mode."

Proceed as follows:

1. Briefly push the **SET/BACK** button. The display will show the two submenu items "Time" and "Mode."
2. Push and release the **up** or **down** arrow button to navigate the two submenu items.
3. Select the required option and then push the **SET/BACK** button.
4. When accessing the "Time" submenu item, briefly push the **SET/BACK** button and "hours" will flash on the display.
5. Push and release the **up** or **down** arrow button for setting.
6. Briefly push the **SET/BACK** button and "minutes" will flash on the display.
7. Push and release the **up** or **down** arrow button for setting.

NOTE:

- The setting will increase or decrease by one unit each time the **up** or **down** arrow button is pushed. Push and hold the button to increase/decrease the setting rapidly. Save the setting by briefly pushing the button when you approach the required setting.
- Briefly push the **SET/BACK** button to return to the "Time" sub-function.

- When accessing the "Mode" submenu, briefly push the **SET/BACK** button. The previously set display format will flash on the display.
- Push and release the **up** or **down** arrow button to select "24h" or "12h."

When you have selected the required settings, briefly push the **SET/BACK** button to go back to the Time, Mode submenu screen, or push and hold the **SET/BACK** button (approximately one second) to go back to the main screen without storing the settings.

Set Date

This function may be used to set the date (day - month - year).

To change the date, proceed as follows:

1. Briefly push the **SET/BACK** button and "year" will flash on the display.
2. Push and release the **up** or **down** arrow button for setting.
3. Briefly push the **SET/BACK** button and "month" will flash on the display.
4. Push and release the **up** or **down** arrow button for setting.
5. Briefly push the **SET/BACK** button and "day" will flash on the display.
6. Push and release the **up** or **down** button for setting.

NOTE: The setting will increase or decrease by one unit each time the **up** or **down** arrow button is pushed. Push and hold the **up** or **down** arrow button to increase/decrease the setting rapidly. Save the setting by briefly pushing the button when you approach the required setting.

Briefly push the **SET/BACK** button to go back to the menu screen, or push and hold the **SET/BACK** button (approximately one second) to go back to the main screen without storing the settings.

Autoclose

With this function active, the doors will automatically lock at when the vehicle's speed exceeds 12 MPH (20 km/h).

To change the setting, proceed as follows:

1. Briefly push the **SET/BACK** button "On" or "Off" will flash on the display (according to the previous setting).
2. Push and release the **up** or **down** arrow button for setting.
3. Briefly push the **SET/BACK** button to go back to the menu screen, or push and hold the **SET/BACK** button (approximately one second) to go back to the main screen without storing the settings.

Units (Set Units)

This function may be used to set the measurement unit in three submenus: "Distance," "Temperature" and "Fuel Economy."

To set the required unit, proceed as follows:

1. Briefly push the **SET/BACK** button to display the three submenus.
2. Push and release the **up** or **down** arrow button to navigate the three submenus.
3. Select the required submenu and then briefly push the **SET/BACK** button.
4. When accessing the "Distance" submenu, briefly push the **SET/BACK** button. Either "mi" or "km" will appear on the display (according to the previous setting).
5. Push and release the **up** or **down** arrow button for setting.
6. Briefly push the **SET/BACK** button to return to the submenu.
7. When accessing the "Fuel Economy" submenu, briefly push the **SET/BACK** button. Either "mpg," "km/l " or "l/100km" will appear on the display (according to the previous setting).

If the distance unit set is “mi,” the fuel economy unit will be displayed in “mpg.”

If the distance unit set is “km,” the fuel economy unit will be displayed in either km/l or l/100km.

1. Push and release the **up** or **down** arrow button for setting.
2. Briefly push the **SET/BACK** button to return to the submenu.
3. When accessing the “Temperature” submenu, briefly push the **SET/BACK** button. Either “°F” or “°C” will appear on the display (according to the previous setting).
4. Push and release the **up** or **down** arrow button for setting.
5. Briefly push the **SET/BACK** button to return to the submenu.

When you have made the required settings, briefly push the **SET/BACK** button to go back to the submenu screen, or push and hold the **SET/BACK** button (approximately one second) to go back to the main screen without storing the settings.

Language (Selecting The Language)

The messages can be displayed in the following languages: Italian, English (USA), German, Portuguese, Spanish, French, Chinese, Russian, and Mexican Spanish.

To set the required language, proceed as follows:

1. Briefly push the **SET/BACK** button. The previously set “language” will flash on the display.
2. Push and release the **up** or **down** arrow button for setting.
3. Briefly push the **SET/BACK** button to go back to the menu screen, or push and hold the **SET/BACK** button (approximately one second) to go back to the main screen without storing the settings.

Buzzer Volume (Adjusting The Failure/Warning Buzzer Volume)

With this function, the volume of the buzzer accompanying any failure/warning indication can be adjusted to one of eight volume levels.

To adjust the volume, proceed as follows:

1. Briefly push the **SET/BACK** button. The previously set volume "level" will flash on the display.
2. Push and release the **up** or **down** arrow button for setting.
3. Briefly push the **SET/BACK** button to go back to the menu screen, or push and hold the **SET/BACK** button (approximately one second) to go back to the main screen without storing the settings.

Service (Scheduled Servicing) — If Equipped

With this function, it is possible to view information on mileage intervals for servicing.

To obtain this information, proceed as follows:

Push the **SET/BACK** button briefly. The display shows the service interval in miles (mi) or kilometers (km) according to the previous setting (see the "Unit Of Measurement" paragraph).

Briefly push the **SET/BACK** button to go back to the menu screen or hold the button down to go back to the standard screen.

NOTE: The "Scheduled Servicing Plan" includes vehicle maintenance at fixed intervals (refer to "Scheduled Servicing" in "Servicing And Maintenance" for further information). This message is displayed automatically along with the warning light when the key is turned to MAR/ON/RUN - 1242 miles (2,000 km) before these deadlines and reappears every 124 miles (200 km). Below 124 miles (200 km) servicing indications are more frequent. The indication will appear in miles or kilometers according to the "Unit Of Measurement" settings. When the next scheduled service is approaching and the key is turned to MAR/ON/RUN, the word Service will appear on the display, followed by the number of miles or kilometers left. Contact an authorized dealer. The operations in the "Scheduled Servicing Plan" will be performed and the message will be reset.

Daytime Running Lamps

This function may be used to activate/deactivate the daytime running lamps.

Proceed as follows to switch this function on or off:

1. Briefly push the **SET/BACK** button to display the three submenus.
2. Briefly push the **SET/BACK** button. "On" or "Off" will flash on the display (according to previous setting).
3. Push and release the **up** or **down** arrow button for setting.
4. Briefly push the **SET/BACK** button to go back to the menu screen, or push and hold the button (approximately one second) to go back to the main screen without storing the settings.

Exit Menu

This function closes the initial menu screen.

Briefly push the **SET/BACK** button to go back to the main screen.

Push and release the **up** arrow button to return to the first menu option (Speed Buzzer).

Push and release the **down** arrow button to return to the last menu option (Daylights).

Values Displayed

Indications On Display

Each time a value is selected, the following information is shown in the instrument cluster display:

- "Trip A" or "Trip B" location(s)
- Name, value and unit of measure of the selected value (e.g. "Range 520 mi").

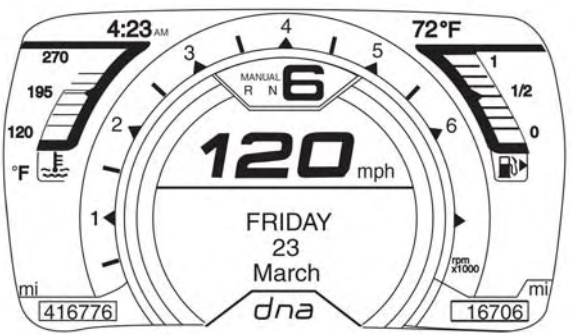

Instrument Cluster Display

After a few seconds, the name of the selected value is replaced by the corresponding icon.

Range

This indicates the distance which may be traveled with the fuel remaining in the tank, assuming that driving conditions will not change. The message "----" will appear on the display in the following cases:

- Distance less than 30 miles (or 50 km).
- The vehicle is parked for a long time with the engine running.

NOTE: The range depends on several factors: driving style, type of route (freeway, residential, mountain roads, etc.), conditions of use of the vehicle (load, tire pressure, etc.). Trip planning must take into account the above notes.

Average Fuel Consumption

This value shows the approximate average consumption since the last reset.

Travel Distance

This value shows the distance covered since the last reset.

Current Fuel Consumption

This indicates the fuel consumption. The value is constantly updated. The message "----" will appear on the display if the vehicle is parked with the engine running.

Average Speed

This value shows the vehicle's average speed as a function of the overall time elapsed since the last reset.

Travel Time

This value shows the time elapsed since the last reset.

Tire Pressure Values

This screen will display OK at each Tire Pressure Monitoring sensor. Refer to "Tire Pressure Monitoring System" in "Safety" for further information.

TRIP COMPUTER

The Trip Computer is located in the instrument cluster. It features a driver-interactive display (displays information such as trip information, range, fuel consumption, average speed, and travel time).

Trip Button

The **TRIP** button, located on the right steering column stalk, can be used to display and to reset the trip values.

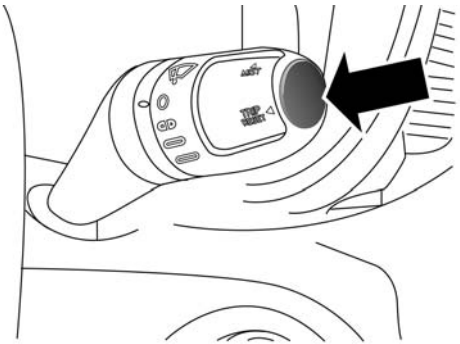

Trip Button

- A short button push displays the different values.
- A long button push resets the system and then starts a new trip.

Trip Functions

Both trip functions are resettable (reset — start of new trip).

"Trip A" can be used to display the figures relating to:

- Range
- Average Fuel Consumption
- Travel Distance
- Current Fuel Consumption
- Average Speed
- Travel Time

"Trip B" can be used to display the figures relating to:

- Average Fuel Consumption
- Travel Distance
- Average Speed
- Travel Time

NOTE: "Trip B" functions may be excluded (see "Trip B Data"). "Range" and "Instantaneous Fuel Consumption" cannot be reset.

New Trip

To reset:

- Push and hold the **TRIP** button to reset the system manually.
- When the "Trip distance" reaches 99999.9 kilometers (621370 miles) or when the "Travel time" reaches 99.59 (99 hours and 59 minutes), the system is reset automatically.
- Disconnecting/Reconnecting the battery resets the system.

NOTE: If the reset operation occurs in the presence of the screens concerning Trip A or Trip B, only the information associated with Trip A or Trip B functions will be reset.

Start Of Trip Procedure

With the ignition on, push and hold the **TRIP** button for over two seconds to reset trip information.

Exit Trip

To exit the Trip function, wait until all the values have been displayed or hold the **MENU** button for longer than one second.

Briefly push and release the **MENU** button to go back to the menu screen or push and hold the **MENU** (approximately one second) to go back to the main screen without storing settings.

WARNING LIGHTS AND MESSAGES

Red Warning Lights

BRAKE — Brake Warning Light

This light monitors various brake functions, including brake fluid level and parking brake application. If the brake light turns on it may indicate that the parking brake is applied, that the brake fluid level is low, or that there is a problem with the anti-lock brake system reservoir.

If the light remains on when the parking brake has been disengaged, and the fluid level is at the full mark on the master cylinder reservoir, it indicates a possible brake hydraulic system malfunction or that a problem with the Brake Booster has been detected by the Anti-Lock Brake System (ABS) / Electronic Stability Control (ESC) system. In this case, the light will remain on until the condition has been corrected. If the problem is related to the brake booster, the ABS pump will run when applying the brake, and a brake pedal pulsation may be felt during each stop.

The dual brake system provides a reserve braking capacity in the event of a failure to a portion of the hydraulic system. A leak in either half of the dual brake system is indicated by the Brake Warning Light, which will turn on when the brake fluid level in the master cylinder has dropped below a specified level.

The light will remain on until the cause is corrected.

NOTE: The light may flash momentarily during sharp cornering maneuvers, which change fluid level conditions. The vehicle should have service performed, and the brake fluid level checked.

If brake failure is indicated, immediate repair is necessary.

WARNING!

Driving a vehicle with the red brake light on is dangerous. Part of the brake system may have failed. It will take longer to stop the vehicle. You could have a collision. Have the vehicle checked immediately.

Vehicles equipped with the Anti-Lock Brake System (ABS) are also equipped with Electronic Brake Force Distribution (EBD). In the event of an EBD failure, the Brake Warning Light will turn on along with the ABS Light. Immediate repair to the ABS system is required.

Operation of the Brake Warning Light can be checked by turning the ignition switch from the OFF position to the ON/RUN position. The light should illuminate for approximately two seconds. The light should then turn off unless the parking brake is applied or a brake fault is detected. If the light does not illuminate, have the light inspected by your authorized dealer.

The light also will turn on when the parking brake is applied with the ignition switch in the ON/RUN position.

NOTE: This light shows only that the parking brake is applied. It does not show the degree of brake application.

— Oil Pressure Warning Light

This light indicates low engine oil pressure. If the light turns on while driving, stop the vehicle and shut off the engine as soon as possible. A chime will sound when this light turns on.

Do not operate the vehicle until the cause is corrected. This light does not indicate how much oil is in the engine. The engine oil level must be checked under the hood.

— Electronic Throttle Control (ETC) Warning Light

This light informs you of a problem with the Electronic Throttle Control (ETC) system. If a problem is detected while the vehicle is running, the light will either stay on or flash depending on the nature of the problem. Cycle the ignition when the vehicle is safely and completely stopped and the transmission is placed in the PARK position. The light should turn off. If the light remains on with the vehicle running, your vehicle will usually be drivable; however, see an authorized dealer for service as soon as possible.

If the light continues to flash when the vehicle is running, immediate service is required and you may experience reduced performance, an elevated/rough idle, or engine stall and your vehicle may require towing. The light will come on when the ignition is placed in the ON/RUN or MAR/ON/RUN position and remain on briefly as a bulb check. If the light does not come on during starting, have the system checked by an authorized dealer.

— Air Bag Warning Light

This light will turn on for four to eight seconds as a bulb check when the ignition is placed in the ON/RUN or MAR/ON/RUN position. If the light is either not on during startup, stays on, or turns on while driving, have the system inspected at an authorized dealer as soon as possible. This light will illuminate with a single chime when a fault with the Air Bag Warning Light has been detected, it will stay on until the fault is cleared. If the light comes on intermittently or remains on while driving, have an authorized dealer service the vehicle immediately.

— Seat Belt Reminder Warning Light

When the ignition is first placed in the ON/RUN or MAR/ON/RUN position, if the driver's seat belt is unbuckled, a chime will sound and the light will turn on. When driving, if the driver or front passenger seat belt remains unbuckled, the Seat Belt Reminder Light will flash or remain on continuously and a chime will sound. Refer to "Occupant Restraints Systems" in "Safety" for further information.

— Transmission Fault Warning Light — If Equipped

This light indicates that there is excessive transmission fluid temperature that might occur with severe usage such as trailer towing. If this light turns on, stop the vehicle and run the engine at idle, with the transmission in NEUTRAL, until the light turns off. Once the light turns off, you may continue to drive normally.

— Battery Charge Warning Light — If Equipped

This light illuminates when the battery is not charging properly. If it stays on while the engine is running, there may be a malfunction with the charging system. Contact your authorized dealer as soon as possible. This indicates a possible problem with the electrical system or a related component.

— Engine Temperature Warning Light

This light warns of an overheated engine condition. If the engine coolant temperature is too high, this indicator will illuminate and a single chime will sound. If the temperature reaches the upper limit, a continuous chime will be sound for four minutes or until the engine is allowed to cool whichever comes first.

If the light turns on while driving, safely pull over and stop the vehicle. If the A/C system is on, turn it off. Also, shift the transmission into NEUTRAL and idle the vehicle. If the temperature reading does not return to normal, turn the engine off immediately and call for service. Refer to "If Your Engine Overheats" in "In Case Of Emergency" for further information.

Yellow Warning Lights

(!) — Tire Pressure Monitoring System (TPMS) Warning Light

The warning light switches on and a message is displayed to indicate that the tire pressure is lower than the recommended value and/or that slow pressure loss is occurring. In these cases, optimal tire duration and fuel consumption may not be guaranteed.

Should one or more tires be in the condition mentioned above, the display will show the indications corresponding to each tire in sequence.

CAUTION!

Do not continue driving with one or more flat tires as handling may be compromised. Stop the vehicle, avoiding sharp braking and steering. If a tire puncture occurs, repair immediately using the dedicated tire repair kit and contact your authorized dealer as soon as possible.

Each tire, including the spare (if provided), should be checked monthly when cold and inflated to the inflation pressure recommended by the vehicle manufacturer on the vehicle placard or tire inflation pressure label. (If your vehicle has tires of a different size than the size indicated on the vehicle placard or tire inflation pressure label, you should determine the proper tire inflation pressure for those tires.)

As an added safety feature, your vehicle has been equipped with a tire pressure monitoring system (TPMS) that illuminates a low tire pressure telltale when one or more of your tires is significantly under-inflated. Accordingly, when the low tire pressure telltale illuminates, you should stop and check your tires as soon as possible, and inflate them to the proper pressure. Driving on a significantly under-inflated tire causes the tire to overheat and can lead to tire failure. Under-inflation also reduces fuel efficiency and tire tread life, and may affect the vehicle's handling and stopping ability.

Please note that the TPMS is not a substitute for proper tire maintenance, and it is the driver's responsibility to maintain correct tire pressure, even if under-inflation has not reached the level to trigger illumination of the TPMS low tire pressure telltale.

Your vehicle has also been equipped with a TPMS malfunction indicator to indicate when the system is not operating properly. The TPMS malfunction indicator is combined with the low tire pressure telltale. When the system detects a malfunction, the telltale will flash for approximately one minute and then remain continuously illuminated. This sequence will continue upon subsequent vehicle start-ups as long as the malfunction exists. When the malfunction indicator is illuminated, the system may not be able to detect or signal low tire pressure as intended. TPMS malfunctions may occur for a variety of reasons, including the installation of replacement or alternate tires or wheels on the vehicle that prevent the TPMS from functioning properly. Always check the TPMS malfunction telltale after replacing one or more tires or wheels on your vehicle to ensure that the replacement or alternate tires and wheels allow the TPMS to continue to function properly.

CAUTION!

The TPMS has been optimized for the original equipment tires and wheels. TPMS pressures and

(Continued)

CAUTION! ***(Continued)***

warning have been established for the tire size equipped on your vehicle. Undesirable system operation or sensor damage may result when using replacement equipment that is not of the same size, type, and/or style. Aftermarket wheels can cause sensor damage. Using aftermarket tire sealants may cause the Tire Pressure Monitoring System (TPMS) sensor to become inoperable. After using an aftermarket tire sealant it is recommended that you take your vehicle to your authorized dealer to have your sensor function checked.

(ABS) — Anti-Lock Brake (ABS) Warning Light

This light monitors the Anti-Lock Brake System (ABS). The light will turn on when the ignition is placed in the ON/RUN or MAR/ON/RUN position and may stay on for as long as four seconds.

If the ABS light remains on or turns on while driving, then the Anti-Lock portion of the brake system is not functioning and service is required. However, the conventional brake system will continue to operate normally if the brake warning light is not on.

If the ABS light is on, the brake system should be serviced as soon as possible to restore the benefits of Anti-Lock Brakes. If the ABS light does not turn on when the ignition is placed in the ON/RUN or MAR/ON/RUN position, have the light inspected by an authorized dealer.

— Electronic Stability Control (ESC) Warning Light — If Equipped

The "ESC Indicator Light" in the instrument cluster will come on when the ignition is placed in the ON/RUN or MAR/ON/RUN position, and when ESC is activated. It should go out with the engine running. If the "ESC Indicator Light" comes on continuously with the engine running, a malfunction has been detected in the ESC system. If this light remains on after several ignition cycles, and the vehicle has been driven several miles (kilometers) at speeds greater than 30 mph (48 km/h), see your authorized dealer as soon as possible to have the problem diagnosed and corrected.

- The "ESC Off Indicator Light" and the "ESC Indicator Light" come on momentarily each time the ignition is placed in the ON/RUN or MAR/ON/RUN position.
- Each time the ignition is turned to ON/RUN or MAR/ON/RUN, the ESC system will be on, even if it was turned off previously.
- The ESC system will make buzzing or clicking sounds when it is active. This is normal; the sounds will stop when ESC becomes inactive.
- This light will come on when the vehicle is in an ESC event.

— Electronic Stability Control (ESC) Off Warning Light — If Equipped

This light indicates the Electronic Stability Control (ESC) is off.

Each time the ignition is turned to ON/RUN or ACC/ON/RUN, the ESC system will be on, even if it was turned off previously.

— Engine Check/Malfunction Indicator Warning Light (MIL)

The Engine Check/Malfunction Indicator Light (MIL) is a part of an Onboard Diagnostic System called OBD II that monitors engine and automatic transmission control systems. The light will illuminate when the ignition is in the ON/RUN position before engine start. If the bulb does not come on when turning the key from OFF to ON/RUN, have the condition checked promptly.

Certain conditions, such as a loose or missing gas cap, poor quality fuel, etc., may illuminate the light after engine start. The vehicle should be serviced if the light stays on through several typical driving styles. In most situations, the vehicle will drive normally and will not require towing.

When the engine is running, the MIL may flash to alert serious conditions that could lead to immediate loss of power or severe catalytic converter damage. The vehicle should be serviced as soon as possible if this occurs.

WARNING!

A malfunctioning catalytic converter, as referenced above, can reach higher temperatures than in normal operating conditions. This can cause a fire if you drive slowly or park over flammable substances such as dry plants, wood, cardboard, etc. This could result in death or serious injury to the driver, occupants or others.

CAUTION!

Prolonged driving with the Malfunction Indicator Light (MIL) on could cause damage to the vehicle control system. It also could affect fuel economy and driveability. If the MIL is flashing, severe catalytic converter damage and power loss will soon occur. Immediate service is required.

⚠ — Generic Warning Light

The Generic Warning Light will illuminate if there is an Engine Oil Pressure Sensor Failure.

— Passenger Air Bag Indicator Light

This light should come and remain on for four to eight seconds as a bulb check when the ignition is first turned to the AVV/START or MAR/ON/RUN position. If the light stays on, or comes on while driving it may indicate a problem with a passenger air bag system, if the light flickers it may indicate an air bag warning bag failure. Have an authorized dealer service the air bag system immediately.

Green Indicator Lights

— Turn Signal Indicator Lights

The turn signal arrows will flash independently when left or right turn signals are selected. Turn signals can be activated when the multifunction lever is moved down (left) or up (right).

— Park/Headlight On Indicator Light

This indicator will illuminate when the park lights or headlights are turned on.

— Speed Control SET Indicator Light

This light will turn on when the speed control is set to the desired speed. Refer to “Speed Control” in “Starting And Operating” for further information.

— Door Mirror Defrost Indicator Light

This indicator will illuminate when the Door Mirror Defrost button on the instrument panel is pushed to the on position.

Blue Indicator Lights

— High Beam Indicator Light

This indicator shows that the high beam headlights are on. Push the multifunction control lever away from you to switch the headlights to high beam. Pull the lever toward you to switch the headlights back to low beam. Pull the lever toward you for a temporary high beam on, ″flash to pass″ scenario.

ONBOARD DIAGNOSTIC SYSTEM — OBD II

Your vehicle is equipped with a sophisticated onboard diagnostic system called OBD II. This system monitors the performance of the emissions, engine, and Alfa Twin Clutch Transmission control systems. When these systems are operating properly, your vehicle will provide excellent performance and fuel economy, as well as engine emissions well within current government regulations.

If any of these systems require service, the OBD II system will turn on the "Malfunction Indicator Light (MIL)". It will also store diagnostic codes and other information to assist your service technician in making repairs. Although your vehicle will usually be drivable and not need towing, see your authorized dealer for service as soon as possible.

CAUTION!

- **Prolonged driving with the MIL on could cause further damage to the emission control system. It could also affect fuel economy and driveability. The vehicle must be serviced before any emissions tests can be performed.**
- **If the MIL is flashing while the vehicle is running, severe catalytic converter damage and power loss will soon occur. Immediate service is required.**

Onboard Diagnostic System (OBD II) Cybersecurity

Your vehicle is required to have an Onboard Diagnostic system (OBD II) and a connection port to allow access to information related to the performance of your emissions controls. Authorized service technicians may need to access this information to assist with the diagnosis and service of your vehicle and emissions system.

WARNING!

- **ONLY an authorized service technician should connect equipment to the OBD II connection port in order to diagnose or service your vehicle.**
- **If unauthorized equipment is connected to the OBD II connection port, such as a driver-behavior tracking device, it may:**
  - **Be possible that vehicle systems, including safety related systems, could be impaired or a loss of vehicle control could occur that may result in an accident involving serious injury or death.**
  - **Access, or allow others to access, information stored in your vehicle systems, including personal information.**

For further information, refer to "Cybersecurity" in the "Multimedia" section.

EMISSIONS INSPECTION AND MAINTENANCE PROGRAMS

In some localities, it may be a legal requirement to pass an inspection of your vehicle's emissions control system. Failure to pass could prevent vehicle registration.

For states that require an Inspection and Maintenance (I/M), this check verifies the "Malfunction Indicator Light (MIL)" is functioning and is not on when the engine is running, and that the OBD II system is ready for testing.

Normally, the OBD II system will be ready. The OBD II system may **not** be ready if your vehicle was recently serviced, recently had a dead battery or a battery replacement. If the OBD II system should be determined not ready for the I/M test, your vehicle may fail the test.

Your vehicle has a simple ignition actuated test, which you can use prior to going to the test station. To check if your vehicle's OBD II system is ready, you must do the following:

1. Cycle the ignition switch to the ON position, but do not crank or start the engine.

NOTE: If you crank or start the engine, you will have to start this test over.

2. As soon as you cycle the ignition switch to the ON position, you will see the "Malfunction Indicator Light (MIL)" symbol come on as part of a normal bulb check.

3. Approximately 15 seconds later, one of two things will happen:

- The MIL will flash for about 10 seconds and then return to being fully illuminated until you turn OFF the ignition or start the engine. This means that your vehicle's OBD II system is **not ready** and you should **not** proceed to the I/M station.
- The MIL will not flash at all and will remain fully illuminated until you place the ignition in the off position or start the engine. This means that your vehicle's OBD II system is **ready** and you can proceed to the I/M station.

If your OBD II system is **not ready,** you should see your authorized dealer or repair facility. If your vehicle was recently serviced or had a battery failure or replacement, you may need to do nothing more than drive your vehicle as you normally would in order for your OBD II system to update. A recheck with the above test routine may then indicate that the system is **now ready**.

Regardless of whether your vehicle's OBD II system is ready or not, if the MIL is illuminated during normal vehicle operation you should have your vehicle serviced before going to the I/M station. The I/M station can fail your vehicle because the MIL is on with the engine running.

SAFETY

CONTENTS

■ SAFETY FEATURES 82

□ Four-Wheel Anti-Lock Brake System (ABS) . . .82

□ ESC (Electronic Stability Control System) 83

■ AUXILIARY DRIVING SYSTEMS 88

□ Tire Pressure Monitoring System (TPMS) 88

■ OCCUPANT RESTRAINT SYSTEMS 92

□ Occupant Restraint Systems Features 92

□ Important Safety Precautions 93

□ Seat Belt Systems 94

□ Supplemental Restraint Systems (SRS) 103

□ Child Restraints 116

□ Transporting Pets 124

■ SAFETY TIPS 124

□ Transporting Passengers 124

□ Exhaust Gas 125

□ Safety Checks You Should Make Inside The Vehicle 125

□ Periodic Safety Checks You Should Make Outside The Vehicle 128

SAFETY FEATURES

Four-Wheel Anti-Lock Brake System (ABS)

The Four-Wheel ABS is designed to aid the driver in maintaining vehicle control under adverse braking conditions. The system operates with a separate computer to modulate hydraulic pressure, to prevent wheel lock-up and to help avoid skidding on slippery surfaces.

The system's pump motor runs during an ABS stop to provide regulated hydraulic pressure. The pump motor makes a low humming noise during operation, which is normal.

The ABS includes an amber ABS Warning Light. When the light is illuminated, the ABS is not functioning. The system reverts to standard non-anti-lock brakes. Turning the ignition OFF and ON again may reset the ABS if the fault detected was only momentary.

WARNING!

- **When the ABS intervenes and you feel the brake pedal pulsating, do not reduce the pressure, but hold it down firmly and confidently; in doing so**

(Continued)

WARNING! ***(Continued)***

you will brake in the shortest distance possible, depending on the current road conditions.

- **For maximum efficiency of the braking system, a bedding-in period of about 311 miles (500 km) is required: during this period it is advisable to avoid sharp, repeated and prolonged braking.**
- **If the ABS intervenes, this indicates that the grip of the tires on the road is nearing its limit: you must slow down to a speed compatible with the available grip.**
- **The ABS can't overrule the natural laws of physics, and can't increase the grip available according to the condition of the road.**
- **The ABS cannot prevent accidents, including those due to excessive speed on corners, driving on low-grip surfaces or aquaplaning.**
- **The capability of the ABS must never be tested irresponsibly and dangerously, in such a way as to compromise personal safety and the safety of others.**
- **For the correct operation of the ABS, the tires must of necessity be the same make and type on all wheels, in perfect condition and, above all, of the prescribed type and dimensions.**

When you are in a severe braking condition involving the use of the ABS, you will experience some pedal drop as the vehicle comes to a stop. This is the result of the system reverting to the base brake system.

Engagement of the ABS may be accompanied by a pulsing sensation. You may also hear a clicking noise. These occurrences are normal and indicate that the system is functioning properly.

System Intervention

A slight pulsing of the brake pedal and noise indicates the intervention of the ABS: this is completely normal when the system intervenes.

ESC (Electronic Stability Control System)

The ESC system improves the directional control and stability of the vehicle in various driving conditions.

The ESC system corrects the vehicle understeer and oversteer, distributing the brake force on the appropriate wheels. The torque supplied by the engine can also be reduced in order to maintain control of the vehicle.

WARNING!

- **Electronic Stability Control (ESC) cannot prevent the natural laws of physics from acting on the vehicle, nor can it increase the traction afforded by prevailing road conditions. ESC cannot prevent all collisions, including those resulting from excessive speed in turns, driving on very slippery surfaces, or hydroplaning. ESC also cannot prevent collisions resulting from loss of vehicle control due to inappropriate driver input for the conditions. Only a safe, attentive, and skillful driver can prevent collisions. The capabilities of an ESC equipped vehicle must never be exploited in a reckless or dangerous manner which could jeopardize the user's safety or the safety of others.**
- **Vehicle modifications, or failure to properly maintain your vehicle, may change the handling characteristics of your vehicle, and may negatively affect the performance of the ESC system. Changes to the steering system, suspension, braking system, tire type and size or wheel size may adversely affect ESC performance. Improperly**

(Continued)

WARNING! *(Continued)*

inflated and unevenly worn tires may also degrade ESC performance. Any vehicle modification or poor vehicle maintenance that reduces the effectiveness of the ESC system can increase the risk of loss of vehicle control, vehicle rollover, personal injury and death.

The ESC system uses sensors installed on the vehicle to determine the trajectory that the driver intends to follow and compares it with the vehicles effective trajectory. When the real trajectory deviates from the desired trajectory, the ESC system intervenes to counter the vehicles understeer or oversteer.

- Oversteer: occurs when the vehicle is turning more than it should according to the angle of the steering wheel.
- Understeer: occurs when the vehicle is turning less than it should according to the angle of the steering wheel.

This vehicle's advanced electronic brake control system also includes: Electronic Brake Distribution (EBD), Anti-Lock Brake System (ABS), Cornering Brake Control System (CBC), Drag Torque Control System (DTC), AntiSlip Regulation System (ASR), Hill Start Assist (HSA), Hydraulic Brake Assistant System (HBA), ELECTRONIC Q2 system (E-Q2) and Ready Alert Brake (RAB). All of the systems work together to enhance vehicle stability and control in various driving conditions, and are commonly referred to as ESC.

System Activation

The ESC system activates automatically when the engine is started and can only be deactivated by selecting "Race" mode. Refer to the "Six-Speed Alfa Twin Clutch Transmission" in this section for further information.

System Intervention

This is indicated by the flashing of the warning light on the instrument panel, to inform the driver that the vehicle is in critical stability and grip conditions.

Electronic Brake Distribution System (EBD)

The EBD system is an integral part of the ESC system and intervenes during braking, distributing the brake force optimally between front and rear wheels.

This guarantees greater braking stability for the vehicle, preventing sudden locking of the rear wheels and the consequent instability of the vehicle.

Cornering Brake Control System (CBC)

The system acts when braking on corners, optimizing the distribution of brake pressure on the four wheels: the system prevents the wheels on the inside of the corner (less affected by the weight of the vehicle) from locking, ensuring better stability and direction for the vehicle.

Drag Torque Control System (DTC)

This is an integral part of the ESC system and intervenes in the event of sudden downshifting, or during braking when the ABS intervenes, restoring torque to the engine and thus preventing excessive drag at the drive wheels, which may lead the wheels to lock and a loss of vehicle stability, above all in low-grip conditions.

AntiSlip Regulation System (ASR)

WARNING!

- **Electronic Stability Control (ESC) cannot prevent the natural laws of physics from acting on the vehicle, nor can it increase the traction afforded by prevailing road conditions. ESC cannot prevent all collisions, including those resulting from**

(Continued)

WARNING! ***(Continued)***

excessive speed in turns, driving on very slippery surfaces, or hydroplaning. ESC also cannot prevent collisions resulting from loss of vehicle control due to inappropriate driver input for the conditions. Only a safe, attentive, and skillful driver can prevent collisions. The capabilities of an ESC equipped vehicle must never be exploited in a reckless or dangerous manner which could jeopardize the user's safety or the safety of others.

- **Vehicle modifications, or failure to properly maintain your vehicle, may change the handling characteristics of your vehicle, and may negatively affect the performance of the ESC system. Changes to the steering system, suspension, braking system, tire type and size or wheel size may adversely affect ESC performance. Improperly inflated and unevenly worn tires may also degrade ESC performance. Any vehicle modification or poor vehicle maintenance that reduces the effectiveness of the ESC system can increase the risk of loss of vehicle control, vehicle rollover, personal injury and death.**

This is an integral part of the ESC system and automatically operates in the event of one or both drive wheels slipping, loss of grip on wet roads (hydroplaning) and acceleration on slippery, snowy or icy roads, etc.

Depending on the slipping conditions, two different control systems are activated:

- If the slipping involves both drive wheels, the ASR system intervenes, reducing the power transmitted by the engine.
- If the slipping only involves one of the drive wheels, it also intervenes automatically, braking the wheel that is slipping.

System Intervention

This is indicated by the flashing of the warning light on the instrument panel, to inform the driver that the vehicle is in critical stability and grip conditions.

Hill Start Assist (HSA)

This is an integral part of the ESC system and facilitates starting on slopes, activating automatically in the following cases:

- Uphill: vehicle stationary on a road with a gradient higher than 5%, engine running, brake pressed and transmission in neutral (N) or gear other than reverse engaged.
- Downhill: vehicle stationary on a road with a gradient higher than 5%, engine running, brake pressed and reverse (R) gear engaged.

When setting off, the ESC system control unit maintains the braking pressure on the wheels until the engine torque necessary for starting is reached, or in any case for a maximum of two seconds, allowing your right foot to be moved easily from the brake pedal to the accelerator.

When the two seconds have elapsed, without starting, the system is automatically deactivated, gradually releasing the braking pressure. During this release stage, the typical brake disengagement noise, indicating that the vehicle is going to move imminently, can be heard.

NOTE:

- HSA is not a parking brake; therefore, never leave the vehicle without having engaged the parking brake, turned the engine off and engaged first gear, so that the vehicle is parked in safe conditions.
- There may be situations on small gradients (less than 8%), with vehicle laden, in which the Hill Holder system may not activate, causing a slight reversing motion and increasing the risk of collision with another vehicle or object. The driver is, in any case, responsible for safe driving.

Hydraulic Brake Assistant System (HBA)

WARNING!

- **The HBA system can't overrule the natural laws of physics, and can't increase the grip available according to the condition of the road.**
- **The HBA system cannot prevent accidents, including those due to excessive speed on corners, driving on low-grip surfaces or aquaplaning.**
- **The capability of the HBA system must never be tested irresponsibly and dangerously, in such a**

(Continued)

WARNING! ***(Continued)***

way as to compromise the safety of the driver, the other occupants of the vehicle or any other road user.

The HBA system is designed to improve the vehicles braking capacity during emergency braking. The system detects emergency braking by monitoring the speed and force with which the brake pedal is pressed, and consequently applies the optimal brake pressure. This can reduce the braking distance, the HBA system therefore completes the ABS.

Maximum assistance from the HBA system is obtained pressing the brake pedal very quickly. In addition, the brake pedal should be pressed continuously during braking, avoiding intermittent presses, to get the most out of the system.

Do not reduce pressure on the brake pedal until braking is no longer necessary.

The HBA system is deactivated when the brake pedal is released.

Electronic Q2 System (E-Q2)

The "Electronic Q2" system intervenes during acceleration on corners, braking the inner drive wheel and thus increasing the traction of the outer wheel (which bears more of the vehicles weight): the torque is thus distributed optimally between the drive wheels in accordance with the driving conditions and road surface, permitting particularly effective, sporty driving.

Ready Alert Brake System (RAB)

This function activates automatically if the accelerator pedal is released rapidly, reducing the brake pad travel (both at front and back), with the aim of preparing the braking system and enhancing its responsiveness, thus reducing the stopping distance in the event of subsequent braking.

AUXILIARY DRIVING SYSTEMS

Tire Pressure Monitoring System (TPMS)

The Tire Pressure Monitor System (TPMS) will warn the driver of a low tire pressure based on the vehicle recommended cold tire pressure.

The tire pressure will vary with temperature by about 1 psi (7 kPa) for every 12°F (6.5°C). This means that when the outside temperature decreases, the tire pressure will decrease. Tire pressure should always be set based on cold inflation tire pressure. This is defined as the tire pressure after the vehicle has not been driven for at least three hours, or driven less than 1 mile (1.6 km) after a three hour period. The cold tire inflation pressure must not exceed the maximum inflation pressure molded into the tire sidewall. Refer to "Tires" in "Servicing And Maintenance" for information on how to properly inflate the vehicle's tires. The tire pressure will also increase as the vehicle is driven - this is normal and there should be no adjustment for this increased pressure.

The TPMS will warn the driver of a low tire pressure if the tire pressure falls below the low pressure warning limit for any reason, including low temperature effects, or natural pressure loss through the tire.

The TPMS will continue to warn the driver of low tire pressure as long as the condition exists, and will not turn off until the tire pressure is at or above the recommended cold placard pressure. Once the low tire pressure warning (Tire Pressure Monitoring [TPM] Telltale Light) illuminates, you must increase the tire pressure to the recommended cold placard pressure in order for the TPM Telltale Light to turn off. The system will automatically update and the TPM Telltale Light will turn off once the system receives the updated tire pressures. The vehicle may need to be driven for up to 20 minutes above 15 mph (24 km/h) in order for the TPMS to receive this information.

For example, your vehicle may have a recommended cold (parked for more than three hours) placard pressure of 30 psi (207 kPa). If the ambient temperature is 68°F (20°C) and the measured tire pressure is 27 psi (186 kPa), a temperature drop to 20°F (-7°C) will decrease the tire pressure to approximately 23 psi (158 kPa). This tire pressure is sufficiently low enough to turn ON the TPM Telltale Light. Driving the vehicle may cause the tire pressure to rise to approximately 27 psi (186 kPa), but the TPM Telltale Light will still be ON. In this situation, the TPM Telltale Light will turn OFF only after the tires are inflated to the vehicle's recommended cold placard pressure value.

CAUTION!

- **The TPMS has been optimized for the original equipment tires and wheels. TPMS pressures and warnings have been established for the tire size equipped on your vehicle. Undesirable system operation or sensor damage may result when using replacement equipment that is not of the same size, type, and/or style. Aftermarket wheels can cause sensor damage. Using aftermarket tire sealants may cause the Tire Pressure Monitoring System (TPMS) sensor to become inoperable. After using an aftermarket tire sealant it is recommended that you take your vehicle to an authorized dealership to have your sensor function checked.**
- **After inspecting or adjusting the tire pressure, always reinstall the valve stem cap. This will prevent moisture and dirt from entering the valve stem, which could damage the Tire Pressure Monitoring Sensor.**

NOTE:

- The TPMS is not intended to replace normal tire care and maintenance, or to provide warning of a tire failure or condition.
- The TPMS should not be used as a tire pressure gauge while adjusting your tire pressure.
- Driving on a significantly under-inflated tire causes the tire to overheat and can lead to tire failure. Under-inflation also reduces fuel efficiency and tire tread life, and may affect the vehicle's handling and stopping ability.
- The TPMS is not a substitute for proper tire maintenance, and it is the driver's responsibility to maintain correct tire pressure using an accurate tire gauge, even if under-inflation has not reached the level to trigger illumination of the Tire Pressure Monitoring Telltale Light.
- Seasonal temperature changes will affect tire pressure, and the TPMS will monitor the actual tire pressure in the tire.

Base System

This is the TPMS warning indicator located in the instrument cluster.

The TPMS uses wireless technology with wheel rim mounted electronic sensors to monitor tire pressure levels. Sensors, mounted to each wheel as part of the valve stem, transmit tire pressure readings to the Receiver Module.

NOTE: It is particularly important for you to check the tire pressure in all of the tires on your vehicle regularly and to maintain the proper pressure.

The TPMS consists of the following components:

- Receiver Module.
- Four Tire Pressure Monitoring Sensors.
- Tire Pressure Monitoring Telltale Light.

Tire Pressure Monitoring Low Pressure Warnings

The Tire Pressure Monitoring Telltale Light will illuminate in the instrument cluster, an acoustic signal will be activated, and the "Check left or right front/rear tire" text message will display when one or more of the four active road tire pressures are low. Should this occur, you should stop as soon as possible, check the inflation pressure of each tire on your vehicle, and inflate each tire to the vehicle's recommended cold placard pressure value. The system will automatically update and the Tire Pressure Monitoring Light will extinguish once the updated tire pressures have been received. The vehicle may need to be driven for up to 20 minutes above 15 mph (24 km/h) to receive this information.

Check TPMS Warnings

The Tire Pressure Monitoring Telltale Light will flash on and off for 75 seconds and remain on solid when a system fault is detected, the "TIRE PRESSURE MONITORING UNAVAILABLE" text message will display. If the ignition key is cycled, this sequence will repeat providing the system fault still exists. The Tire Pressure Monitoring Telltale Light will turn off when the fault condition no longer exists. A system fault can occur with any of the following scenarios:

1. Jamming due to electronic devices or driving next to facilities emitting the same radio frequencies as the TPM sensors.
2. Installing some form of aftermarket window tinting that affects radio wave signals.
3. Snow or ice around the wheels or wheel housings.
4. Using tire chains on the vehicle.
5. Using wheels/tires not equipped with TPM sensors.

NOTE: Your vehicle may be equipped with a compact spare wheel and tire assembly.

1. The compact spare tire does not have a tire pressure monitoring sensor. Therefore, the TPMS will not monitor the tire pressure in the compact spare tire.
2. If you install the compact spare tire in place of a road tire that has a pressure below the low-pressure warning limit, upon the next ignition key cycle, a chime will sound and the Tire Pressure Monitoring Telltale Light will still turn ON due to the low tire.

3. However, after driving the vehicle for up to 20 minutes above 15 mph (24 km/h), the Tire Pressure Monitoring Telltale Light will flash on and off for 75 seconds and then remain on solid.
4. This occurs for each subsequent ignition key cycle, a chime will sound and the Tire Pressure Monitoring Telltale Light will flash on and off for 75 seconds and then remain on solid.
5. Once you repair or replace the original road tire and reinstall it on the vehicle in place of the compact spare tire, the TPMS will update automatically and the Tire Pressure Monitoring Telltale Light will turn OFF, as long as no tire pressure is below the low-pressure warning limit in any of the four active road tires. The vehicle may need to be driven for up to 20 minutes above 15 mph (24 km/h) in order for the TPMS to receive this information.

General Information

This device complies with Part 15 of the FCC rules and RSS-210 of Industry Canada. Operation is subject to the following two conditions:

(1) This device may not cause harmful interference.

(2) This device must accept any interference received, including interference that may cause undesired operation.

NOTE: Changes or modifications not expressly approved by the party responsible for compliance could void the user's authority to operate the equipment.

OCCUPANT RESTRAINT SYSTEMS

Some of the most important safety features in your vehicle are the restraint systems:

Occupant Restraint Systems Features

- Seat Belt Systems
- Supplemental Restraint Systems (SRS) Air Bags
- Child Restraints

Some of the safety features described in this section may be standard equipment on some models, or may be optional equipment on others. If you are not sure, ask your authorized dealer.

Important Safety Precautions

Please pay close attention to the information in this section. It tells you how to use your restraint system properly, to keep you and your passengers as safe as possible.

Here are some simple steps you can take to minimize the risk of harm from a deploying air bag:

1. Children 12 years old and under should always ride buckled up in a vehicle with a rear seat.
2. If a child from 2 to 12 years old (not in a rear-facing child restraint) must ride in the front passenger seat, move the seat as far back as possible and use the proper child restraint (refer to “Child Restraints” in this section for further information).
3. Children that are not big enough to wear the vehicle seat belt properly (refer to “Child Restraints” in this section for further information) should be secured in a vehicle with a rear seat in child restraints or belt-positioning booster seats. Older children who do not use child restraints or belt-positioning booster seats should ride properly buckled up in a vehicle with a rear seat.
4. Never allow children to slide the shoulder belt behind them or under their arm.
5. You should read the instructions provided with your child restraint to make sure that you are using it properly.
6. All occupants should always wear their lap and shoulder belts properly.
7. The driver and front passenger seats should be moved back as far as practical to allow the front air bags room to inflate.
8. Do not lean against the door or window. If your vehicle has side air bags, and deployment occurs, the side air bags will inflate forcefully into the space between occupants and the door and occupants could be injured.
9. If the air bag system in this vehicle needs to be modified to accommodate a disabled person, refer to the “Customer Assistance” section for customer service contact information.

WARNING!

- **Never place a rear-facing child restraint in front of an air bag. A deploying passenger front air bag can cause death or serious injury to a child 12 years or younger, including a child in a rear-facing child restraint.**
- **Only use a rear-facing child restraint in a vehicle with a rear seat.**

Seat Belt Systems

Buckle up even though you are an excellent driver, even on short trips. Someone on the road may be a poor driver and could cause a collision that includes you. This can happen far away from home or on your own street.

Research has shown that seat belts save lives, and they can reduce the seriousness of injuries in a collision. Some of the worst injuries happen when people are thrown from the vehicle. Seat belts reduce the possibility of ejection and the risk of injury caused by striking the inside of the vehicle. Everyone in a motor vehicle should be belted at all times.

Enhanced Seat Belt Use Reminder System (BeltAlert)

Driver and Passenger BeltAlert (if equipped)

BeltAlert is a feature intended to remind the driver and outboard front seat passenger (if equipped with outboard front passenger seat BeltAlert) to buckle their seat belts. The Belt Alert feature is active whenever the ignition switch is in the START or ON/RUN position.

Initial Indication

If the driver is unbuckled when the ignition switch is first in the START or ON/RUN position, a chime will signal for a few seconds. If the driver or outboard front seat passenger (if equipped with outboard front passenger seat BeltAlert) is unbuckled when the ignition switch is first in the START or ON/RUN position the Seat Belt Reminder Light will turn on and remain on until both outboard front seat belts are buckled. The outboard front passenger seat BeltAlert is not active when an outboard front passenger seat is unoccupied.

BeltAlert Warning Sequence

The BeltAlert warning sequence is activated when the vehicle is moving above a specified vehicle speed range and the driver or outboard front seat passenger is unbuckled (if equipped with outboard front passenger seat BeltAlert) (the outboard front passenger seat BeltAlert is not active when the outboard front passenger seat is unoccupied). The BeltAlert warning sequence starts by blinking the Seat Belt Reminder Light and sounding an intermittent chime. Once the BeltAlert warning sequence has completed, the Seat Belt Reminder Light will remain on until the seat belts are buckled. The BeltAlert warning sequence may repeat based on vehicle speed until the driver and occupied outboard front seat passenger seat belts are buckled. The driver should instruct all occupants to buckle their seat belts.

Change of Status

If the driver or outboard front seat passenger (if equipped with outboard front passenger seat BeltAlert) unbuckles their seat belt while the vehicle is traveling, the BeltAlert warning sequence will begin until the seat belts are buckled again.

The outboard front passenger seat BeltAlert is not active when the outboard front passenger seat is unoccupied. BeltAlert may be triggered when an animal or other items are placed on the outboard front passenger seat or when the seat is folded flat (if equipped). It is recommended that pets be restrained in the rear seat (if equipped) in pet harnesses or pet carriers that are secured by seat belts, and cargo is properly stowed.

BeltAlert can be activated or deactivated by your authorized dealer. FCA US LLC does not recommend deactivating BeltAlert.

NOTE: If BeltAlert has been deactivated and the driver or outboard front seat passenger (if equipped with outboard front passenger seat BeltAlert) is unbuckled the Seat Belt Reminder Light will turn on and remain on until the driver and outboard front seat passenger seat belts are buckled.

Lap/Shoulder Belts

All seating positions in your vehicle are equipped with lap/shoulder belts.

The seat belt webbing retractor will lock only during very sudden stops or collisions. This feature allows the shoulder part of the seat belt to move freely with you under normal conditions. However, in a collision the seat belt will lock and reduce your risk of striking the inside of the vehicle or being thrown out of the vehicle.

WARNING!

- **Relying on the air bags alone could lead to more severe injuries in a collision. The air bags work with your seat belt to restrain you properly. In some collisions, the air bags won't deploy at all. Always wear your seat belt even though you have air bags.**
- **In a collision, you and your passengers can suffer much greater injuries if you are not properly buckled up. You can strike the interior of your vehicle or other passengers, or you can be thrown out of the vehicle. Always be sure you and others in your vehicle are buckled up properly.**

(Continued)

WARNING! ***(Continued)***

- **It is dangerous to ride in a cargo area, inside or outside of a vehicle. In a collision, people riding in these areas are more likely to be seriously injured or killed.**
- **Do not allow people to ride in any area of your vehicle that is not equipped with seats and seat belts.**
- **Be sure everyone in your vehicle is in a seat and using a seat belt properly. Occupants, including the driver, should always wear their seat belts whether or not an air bag is also provided at their seating position to minimize the risk of severe injury or death in the event of a crash.**
- **Wearing your seat belt incorrectly could make your injuries in a collision much worse. You might suffer internal injuries, or you could even slide out of the seat belt. Follow these instructions to wear your seat belt safely and to keep your passengers safe, too.**

(Continued)

WARNING! *(Continued)*

- **Two people should never be belted into a single seat belt. People belted together can crash into one another in a collision, hurting one another badly. Never use a lap/shoulder belt or a lap belt for more than one person, no matter what their size.**

WARNING!

- **A lap belt worn too high can increase the risk of injury in a collision. The seat belt forces won't be at the strong hip and pelvic bones, but across your abdomen. Always wear the lap part of your seat belt as low as possible and keep it snug.**
- **A twisted seat belt may not protect you properly. In a collision, it could even cut into you. Be sure the seat belt is flat against your body, without twists. If you can't straighten a seat belt in your vehicle, take it to your authorized dealer immediately and have it fixed.**

(Continued)

WARNING! *(Continued)*

- **A seat belt that is buckled into the wrong buckle will not protect you properly. The lap portion could ride too high on your body, possibly causing internal injuries. Always buckle your seat belt into the buckle nearest you.**
- **A seat belt that is too loose will not protect you properly. In a sudden stop, you could move too far forward, increasing the possibility of injury. Wear your seat belt snugly.**
- **A seat belt that is worn under your arm is dangerous. Your body could strike the inside surfaces of the vehicle in a collision, increasing head and neck injury. A seat belt worn under the arm can cause internal injuries. Ribs aren't as strong as shoulder bones. Wear the seat belt over your shoulder so that your strongest bones will take the force in a collision.**
- **A shoulder belt placed behind you will not protect you from injury during a collision. You are more likely to hit your head in a collision if you do not wear your shoulder belt. The lap and shoulder belt are meant to be used together.**

(Continued)

WARNING! ***(Continued)***

- **A frayed or torn seat belt could rip apart in a collision and leave you with no protection. Inspect the seat belt system periodically, checking for cuts, frays, or loose parts. Damaged parts must be replaced immediately. Do not disassemble or modify the seat belt system. Seat belt assemblies must be replaced after a collision.**

Lap/Shoulder Belt Operating Instructions

1. Enter the vehicle and close the door. Sit back and adjust the seat.
2. The seat belt latch plate is above the back of the front seat, and next to your arm in the rear seat (for vehicles equipped with a rear seat). Grasp the latch plate and pull out the seat belt. Slide the latch plate up the webbing as far as necessary to allow the seat belt to go around your lap.

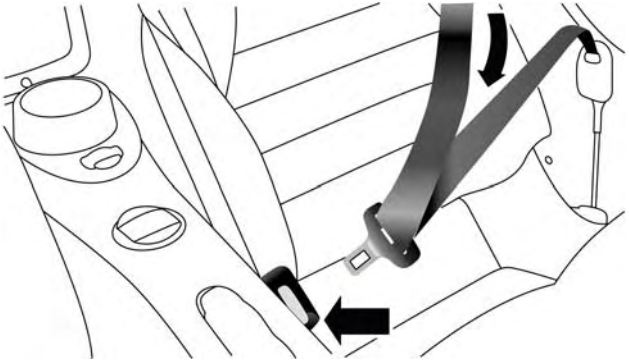

Pulling Out The Latch Plate

3. When the seat belt is long enough to fit, insert the latch plate into the buckle until you hear a “click.”

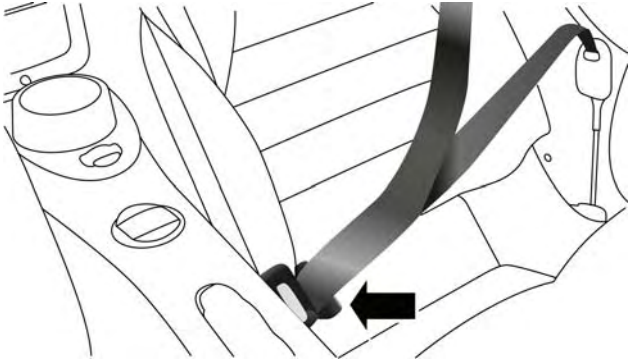

Inserting Latch Plate Into Buckle

4. Position the lap belt so that it is snug and lies low across your hips, below your abdomen. To remove slack in the lap belt portion, pull up on the shoulder belt. To loosen the lap belt if it is too tight, tilt the latch plate and pull on the lap belt. A snug seat belt reduces the risk of sliding under the seat belt in a collision.

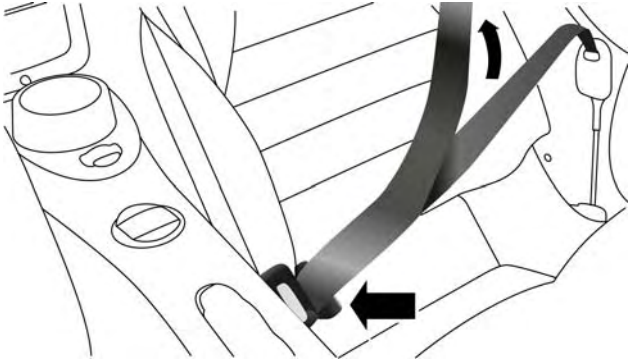

Positioning The Lap Belt

5. Position the shoulder belt across the shoulder and chest with minimal, if any slack so that it is comfortable and not resting on your neck. The retractor will withdraw any slack in the shoulder belt.

6. To release the seat belt, push the red button on the buckle. The seat belt will automatically retract to its stowed position. If necessary, slide the latch plate down the webbing to allow the seat belt to retract fully.

Lap/Shoulder Belt Untwisting Procedure

Use the following procedure to untwist a twisted lap/shoulder belt.

1. Position the latch plate as close as possible to the anchor point.
2. At about 6 to 12 inches (15 to 30 cm) above the latch plate, grasp and twist the seat belt webbing 180 degrees to create a fold that begins immediately above the latch plate.
3. Slide the latch plate upward over the folded webbing. The folded webbing must enter the slot at the top of the latch plate.
4. Continue to slide the latch plate up until it clears the folded webbing and the seat belt is no longer twisted.

Seat Belts And Pregnant Women

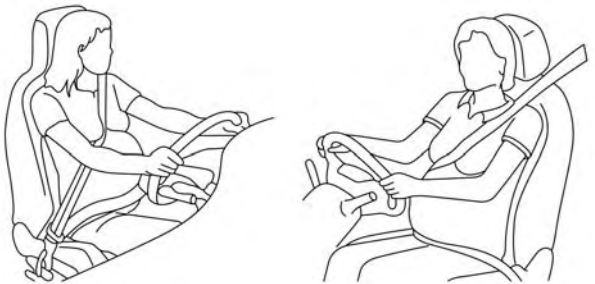

0228098654US

Pregnant Women And Seat Belts

Seat belts must be worn by all occupants including pregnant women: the risk of injury in the event of an accident is reduced for the mother and the unborn child if they are wearing a seat belt.

Position the lap belt snug and low below the abdomen and across the strong bones of the hips. Place the shoulder belt across the chest and away from the neck. Never place the shoulder belt behind the back or under the arm.

Seat Belt Pretensioner

The front seat belt system is equipped with pretensioning devices that are designed to remove slack from the seat belt in the event of a collision. These devices may improve the performance of the seat belt by removing slack from the seat belt early in a collision. Pretensioners work for all size occupants, including those in child restraints.

NOTE: These devices are not a substitute for proper seat belt placement by the occupant. The seat belt still must be worn snugly and positioned properly.

The pretensioners are triggered by the Occupant Restraint Controller (ORC). Like the air bags, the pretensioners are single use items. A deployed pretensioner or a deployed air bag must be replaced immediately.

Energy Management Feature

The front seat belt system is equipped with an Energy Management feature that may help further reduce the risk of injury in the event of a collision. The seat belt system has a retractor assembly that is designed to release webbing in a controlled manner.

Switchable Automatic Locking Retractor (ALR)

The seat belt in the passenger seating position is equipped with a Switchable Automatic Locking Retractor (ALR) which is used to secure a child restraint system. For additional information, refer to "Installing Child Restraints Using The Vehicle Seat Belt" under the "Child Restraints" section of this manual. The figure below illustrates the locking feature for each seating position.

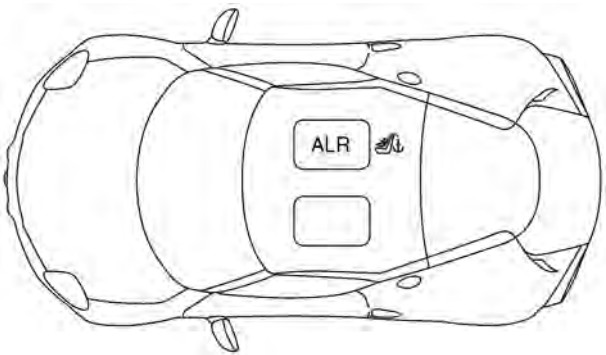

ALR — Switchable Automatic Locking Retractor

If the passenger seating position is equipped with an ALR and is being used for normal usage, only pull the seat belt webbing out far enough to comfortably wrap around the occupant's mid-section so as to not activate the ALR. If the ALR is activated, you will hear a clicking sound as the seat belt retracts. Allow the webbing to retract completely in this case and then carefully pull out only the amount of webbing necessary to comfortably wrap around the occupant's mid-section. Slide the latch plate into the buckle until you hear a "click."

In Automatic Locking Mode, the shoulder belt is automatically pre-locked. The seat belt will still retract to remove any slack in the shoulder belt. Use the Automatic Locking Mode anytime a child restraint is installed in a seating position that has a seat belt with this feature. Children 12 years old and under should always be properly restrained in a vehicle with a rear seat.

WARNING!

- **Never place a rear-facing child restraint in front of an air bag. A deploying passenger front air bag can cause death or serious injury to a child 12 years or younger, including a child in a rear-facing child restraint.**
- **Only use a rear-facing child restraint in a vehicle with a rear seat.**

How To Engage The Automatic Locking Mode

1. Buckle the combination lap and shoulder belt.
2. Grasp the shoulder portion and pull downward until the entire seat belt is extracted.
3. Allow the seat belt to retract. As the seat belt retracts, you will hear a clicking sound. This indicates the seat belt is now in the Automatic Locking Mode.

How To Disengage The Automatic Locking Mode

Unbuckle the combination lap/shoulder belt and allow it to retract completely to disengage the Automatic Locking Mode and activate the vehicle sensitive (emergency) locking mode.

WARNING!

- **The seat belt assembly must be replaced if the switchable Automatic Locking Retractor (ALR) feature or any other seat belt function is not working properly when checked according to the procedures in the Service Manual.**
- **Failure to replace the seat belt assembly could increase the risk of injury in collisions.**
- **Do not use the Automatic Locking Mode to restrain occupants who are wearing the seat belt or children who are using booster seats. The locked mode is only used to install rear-facing or forward-facing child restraints that have a harness for restraining the child.**

Supplemental Restraint Systems (SRS)

Some of the safety features described in this section may be standard equipment on some models, or may be optional equipment on others. If you are not sure, ask your authorized dealer.

The air bag system must be ready to protect you in a collision. The Occupant Restraint Controller (ORC) monitors the internal circuits and interconnecting wiring associated with the electrical Air Bag System Components. Your vehicle may be equipped with the following Air Bag System Components:

Air Bag System Components

- Occupant Restraint Controller (ORC)
- Air Bag Warning Light
- Steering Wheel and Column
- Instrument Panel
- Knee Impact Bolsters
- Driver and Front Passenger Air Bags
- Seat Belt Buckle Switch
- Supplemental Side Air Bags

- Supplemental Knee Air Bags
- Front and Side Impact Sensors
- Seat Belt Pretensioners
- Seat Track Position Sensors

Air Bag Warning Light

The ORC monitors the readiness of the electronic parts of the air bag system whenever the ignition switch is in the AVV/START or MAR/ACC/ON/RUN position. If the ignition switch is in the STOP/OFF/LOCK position the air bag system is not on and the air bags will not inflate.

The ORC contains a backup power supply system that may deploy the air bag system even if the battery loses power or it becomes disconnected prior to deployment.

The ORC turns on the Air Bag Warning Light in the instrument panel for approximately four to eight seconds for a self-check when the ignition switch is in the MAR/ACC/ON/RUN position. After the self-check, the Air Bag Warning Light will turn off. If the ORC detects a malfunction in any part of the system, it turns on the Air Bag Warning Light, either momentarily or continuously. A single chime will sound to alert you if the light comes on again after initial startup.

The ORC also includes diagnostics that will illuminate the instrument panel Air Bag Warning Light if a malfunction is detected that could affect the air bag system. The diagnostics also record the nature of the malfunction. While the air bag system is designed to be maintenance free, if any of the following occurs, have an authorized dealer service the air bag system immediately.

- The Air Bag Warning Light does not come on during the four to eight seconds when the ignition switch is first in the MAR/ACC/ON/RUN position.
- The Air Bag Warning Light remains on after the four to eight-second interval.
- The Air Bag Warning Light comes on intermittently or remains on while driving.

NOTE: If the speedometer, tachometer, or any engine related gauges are not working, the Occupant Restraint Controller (ORC) may also be disabled. In this condition the air bags may not be ready to inflate for your protection. Have an authorized dealer service the air bag system immediately.

WARNING!

Ignoring the Air Bag Warning Light in your instrument panel could mean you won't have the air bag system to protect you in a collision. If the light does not come on as a bulb check when the ignition is first turned on, stays on after you start the vehicle, or if it comes on as you drive, have an authorized dealer service the air bag system immediately.

Front Air Bags

This vehicle has front air bags and lap/shoulder belts for both the driver and front passenger. The front air bags are a supplement to the seat belt restraint systems. The driver front air bag is mounted in the center of the steering wheel. The passenger front air bag is mounted in the instrument panel, above the glove compartment. The words "SRS AIRBAG" or "AIRBAG" are embossed on the air bag covers.

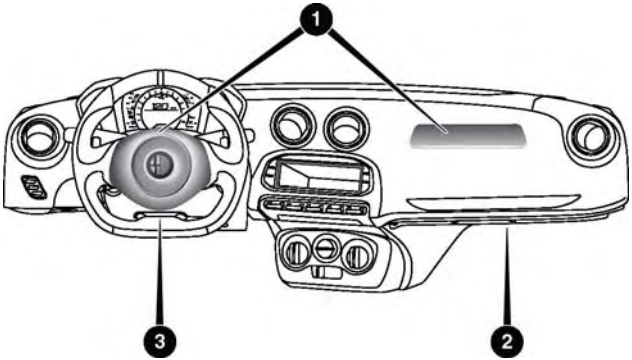

Front Air Bag/Knee Bolster Locations

1 — Driver And Passenger Front Air Bags
2 — Passenger Knee Impact Bolster
3 — Driver Knee Impact Bolster/Supplemental Driver Knee Air Bag

WARNING!

- **Being too close to the steering wheel or instrument panel during front air bag deployment could cause serious injury, including death. Air bags need room to inflate. Sit back, comfortably**

(Continued)

WARNING! *(Continued)*

extending your arms to reach the steering wheel or instrument panel.

- **Never place a rear-facing child restraint in front of an air bag. A deploying passenger front air bag can cause death or serious injury to a child 12 years or younger, including a child in a rear-facing child restraint.**
- **Only use a rear-facing child restraint in a vehicle with a rear seat.**

Driver And Passenger Front Air Bag Features

The Advanced Front Air Bag system has multistage driver and front passenger air bags. This system provides output appropriate to the severity and type of collision as determined by the Occupant Restraint Controller (ORC), which may receive information from the front impact sensors (if equipped) or other system components.

The first stage inflator is triggered immediately during an impact that requires air bag deployment. A low energy output is used in less severe collisions. A higher energy output is used for more severe collisions.

This vehicle may be equipped with a driver and/or front passenger seat belt buckle switch that detects whether the driver or front passenger seat belt is buckled. The seat belt buckle switch may adjust the inflation rate of the Advanced Front Air Bags.

This vehicle may be equipped with driver and/or front passenger seat track position sensors that may adjust the inflation rate of the Advanced Front Air Bags based upon seat position.

WARNING!

- **No objects should be placed over or near the air bag on the instrument panel or steering wheel because any such objects could cause harm if the vehicle is in a collision severe enough to cause the air bag to inflate.**
- **Do not put anything on or around the air bag covers or attempt to open them manually. You may damage the air bags and you could be injured because the air bags may no longer be functional. The protective covers for the air bag cushions are designed to open only when the air bags are inflating.**

(Continued)

WARNING! ***(Continued)***

- **Relying on the air bags alone could lead to more severe injuries in a collision. The air bags work with your seat belt to restrain you properly. In some collisions, air bags won't deploy at all. Always wear your seat belts even though you have air bags.**

Front Air Bag Operation

Front Air Bags are designed to provide additional protection by supplementing the seat belts. Front air bags are not expected to reduce the risk of injury in rear, side, or rollover collisions. The front air bags will not deploy in all frontal collisions, including some that may produce substantial vehicle damage — for example, some pole collisions, truck underrides, and angle offset collisions.

On the other hand, depending on the type and location of impact, front air bags may deploy in crashes with little vehicle front-end damage but that produce a severe initial deceleration.

Because air bag sensors measure vehicle deceleration over time, vehicle speed and damage by themselves are not good indicators of whether or not an air bag should have deployed.

Seat belts are necessary for your protection in all collisions, and also are needed to help keep you in position, away from an inflating air bag.

When the ORC detects a collision requiring the front air bags, it signals the inflator units. A large quantity of non-toxic gas is generated to inflate the front air bags.

The steering wheel hub trim cover and the upper right side of the instrument panel separate and fold out of the way as the air bags inflate to their full size. The front air bags fully inflate in less time than it takes to blink your eyes. The front air bags then quickly deflate while helping to restrain the driver and front passenger.

Knee Impact Bolsters

The Knee Impact Bolsters help protect the knees of the driver and front passenger, and position the front occupants for improved interaction with the front air bags.

WARNING!

- **Do not drill, cut, or tamper with the knee impact bolsters in any way.**
- **Do not mount any accessories to the knee impact bolsters such as alarm lights, stereos, citizen band radios, etc.**

Supplemental Driver Knee Air Bag

This vehicle is equipped with a Supplemental Driver Knee Air Bag mounted in the instrument panel below the steering column. The Supplemental Driver Knee Air Bag provides enhanced protection during a frontal impact by working together with the seat belts, pretensioners, and front air bags.

Supplemental Side Air Bags

Supplemental Door-Integrated Side Air Bag Inflatable Curtains (SABICs)

This vehicle is equipped with Supplemental Door-Integrated Side Air Bag Inflatable Curtains (SABICs).

SABICs may help reduce the risk of head and other injuries to front seat outboard occupants in certain side impacts, in addition to the injury reduction potential provided by the seat belts and body structure.

The SABICs are located in the door trim below the side windows. The trim covering the SABICs is labeled “SRS AIRBAG” or “AIRBAG.”

The SABICs deploy upward, covering the side windows. An inflating SABIC pushes the outside edge of the trim out of the way and covers the window. The SABICs inflate with enough force to injure occupants if they are not belted and seated properly, or if items are positioned in the area where the SABICs inflate. Children are at an even greater risk of injury from a deploying air bag.

The SABICs may help reduce the risk of partial or complete ejection of vehicle occupants through side windows in certain side impact events.

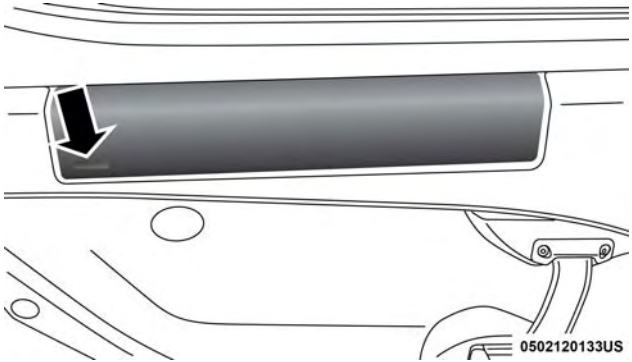

Supplemental Door-Integrated Side Air Bag Inflatable Curtains (SABICs) Location

WARNING!

Do not stack luggage or other cargo up high enough to block the deployment of the SABICs. The door trim below the side windows where the SABIC and its deployment path are located should remain free from any obstructions.

Side Impacts

The Side Air Bags are designed to activate in certain side impacts. The Occupant Restraint Controller (ORC) determines whether the deployment of the Side Air Bags in a particular impact event is appropriate, based on the severity and type of collision. The side impact sensors aid the ORC in determining the appropriate response to impact events. The system is calibrated to deploy the Side Air Bags on the impact side of the vehicle during impacts that require Side Air Bag occupant protection. In side impacts, the Side Air Bags deploy independently; a left side impact deploys the left Side Air Bags only and a right-side impact deploys the right Side Air Bags only. Vehicle damage by itself is not a good indicator of whether or not Side Air Bags should have deployed.

The Side Air Bags will not deploy in all side collisions, including some collisions at certain angles, or some side collisions that do not impact the area of the passenger compartment. The Side Air Bags may deploy during angled or offset frontal collisions where the front air bags deploy.

Side Air Bags are a supplement to the seat belt restraint system. Side Air Bags deploy in less time than it takes to blink your eyes.

WARNING!

- **Occupants, including children, who are up against or very close to Side Air Bags can be seriously injured or killed. Occupants, including children, should never lean on or sleep against the door, side windows, or area where the side air bags inflate, even if they are in an infant or child restraint.**
- **Seat belts (and child restraints where appropriate) are necessary for your protection in all collisions. They also help keep you in position, away from an inflating Side Air Bag. To get the best protection from the Side Air Bags, occupants must wear their seat belts properly and sit upright with their backs against the seats. Children must be properly restrained in a child restraint or booster seat that is appropriate for the size of the child.**

WARNING!

- **Side Air Bags need room to inflate. Do not lean against the door or window. Sit upright in the center of the seat.**
- **Being too close to the Side Air Bags during deployment could cause you to be severely injured or killed.**
- **Relying on the Side Air Bags alone could lead to more severe injuries in a collision. The Side Air Bags work with your seat belt to restrain you properly. In some collisions, Side Air Bags won't deploy at all. Always wear your seat belt even though you have Side Air Bags.**

NOTE: Air bag covers may not be obvious in the interior trim, but they will open during air bag deployment.

Rollover Events

Side Air Bags are designed to activate in certain rollover events. The ORC determines whether the deployment of the Side Air Bags in a particular rollover event is appropriate, based on the severity and type of collision. Vehicle damage by itself is not a good indicator of whether or not Side Air Bags should have deployed.

The Side Air Bags will not deploy in all rollover events. The rollover sensing system determines if a rollover event may be in progress and whether deployment is appropriate. In the event the vehicle experiences a rollover or near rollover event, and deployment of the Side Air Bags is appropriate, the rollover sensing system will also deploy the seat belt pretensioners on both sides of the vehicle.

The SABICs may help reduce the risk of partial or complete ejection of vehicle occupants through side windows in certain rollover or side impact events.

Air Bag System Components

NOTE: The Occupant Restraint Controller (ORC) monitors the internal circuits and interconnecting wiring associated with electrical Air Bag System Components listed below:

- Occupant Restraint Controller (ORC)
- Air Bag Warning Light
- Steering Wheel and Column
- Instrument Panel
- Knee Impact Bolsters
- Driver and Front Passenger Air Bags
- Seat Belt Buckle Switch
- Supplemental Side Air Bags
- Supplemental Knee Air Bags
- Front and Side Impact Sensors
- Seat Belt Pretensioners
- Seat Track Position Sensors

If A Deployment Occurs

The front air bags are designed to deflate immediately after deployment.

NOTE: Front and/or side air bags will not deploy in all collisions. This does not mean something is wrong with the air bag system.

If you do have a collision which deploys the air bags, any or all of the following may occur:

- The air bag material may sometimes cause abrasions and/or skin reddening to the occupants as the air bags deploy and unfold. The abrasions are similar to friction rope burns or those you might get sliding along a carpet or gymnasium floor. They are not caused by contact with chemicals. They are not permanent and normally heal quickly. However, if you haven't healed significantly within a few days, or if you have any blistering, see your doctor immediately.
- As the air bags deflate, you may see some smoke-like particles. The particles are a normal by-product of the process that generates the non-toxic gas used for air bag inflation. These airborne particles may irritate the skin, eyes, nose, or throat. If you have skin or eye irritation, rinse the area with cool water. For nose or throat irritation, move to fresh air. If the irritation continues, see your doctor. If these particles settle on your clothing, follow the garment manufacturer's instructions for cleaning.

Do not drive your vehicle after the air bags have deployed. If you are involved in another collision, the air bags will not be in place to protect you.

WARNING!

Deployed air bags and seat belt pretensioners cannot protect you in another collision. Have the air bags, seat belt pretensioners, and the seat belt retractor assemblies replaced by an authorized dealer immediately. Also, have the Occupant Restraint Controller System serviced as well.

NOTE:

- Air bag covers may not be obvious in the interior trim, but they will open during air bag deployment.
- After any collision, the vehicle should be taken to an authorized dealer immediately.

Enhanced Accident Response System

In the event of an impact, if the communication network remains intact, and the power remains intact, depending on the nature of the event, the ORC will determine whether to have the Enhanced Accident Response System perform the following functions:

- Cut off fuel to the engine.
- Flash hazard lights as long as the battery has power or until the hazard light button is pressed. The hazard lights can be deactivated by pressing the hazard light button.
- Turn on the interior lights, which remain on as long as the battery has power or for 15 minutes from the intervention of the Enhanced Accident Response System.
- Unlock the power door locks.

Enhanced Accident Response System Reset Procedure

After the event occurs, when the system is active, a message regarding fuel cutoff is displayed. Turn the ignition switch from ignition AVV/START or MAR/ACC/ON/RUN to ignition STOP/OFF/LOCK. Carefully check the vehicle for fuel leaks in the engine compartment and on the ground near the engine compartment and fuel tank before resetting the system and starting the engine.

Depending on the nature of the event the left and right turn signal lights, located in the instrument panel, may both be blinking and will continue to blink. In order to move your vehicle to the side of the road, you must follow the system reset procedure.

Customer Action	Customer Will See
NOTE: Each step MUST BE held for at least two seconds	
1. Turn ignition STOP/OFF/LOCK. (Turn Signal Must be placed in Neutral State).	
2. Turn ignition MAR/ACC/ON/RUN.	Right turn light BLINKS. Left turn light is OFF.
3. Turn right turn signal switch ON.	Right turn light is ON SOLID. Left turn light BLINKS.
4. Place turn signal in neutral state.	Right turn light is OFF. Left turn light BLINKS.

Customer Action	Customer Will See
NOTE: Each step MUST BE held for at least two seconds	
5. Turn left turn signal switch ON.	Right turn light BLINKS. Left turn light is ON SOLID.
6. Place turn signal in neutral state.	Right turn light BLINKS. Left turn light is OFF.
7. Turn right turn signal switch ON.	Right turn light is ON SOLID. Left turn light BLINKS.
8. Place turn signal in neutral state.	Right turn light is OFF. Left turn light BLINKS.
9. Turn left turn signal switch ON.	Right turn light is ON SOLID. Left turn light is ON SOLID.
10. Turn left turn signal switch OFF. (Turn Signal Switch Must be placed in Neutral State).	Right turn light is OFF. Left turn light is OFF.

Customer Action	Customer Will See
NOTE: Each step MUST BE held for at least two seconds	
11. Turn ignition STOP/OFF/LOCK.	
12. Turn ignition MAR/ACC/ON/RUN. (Entire sequence needs to be completed within one minute or sequence will need to be repeated).	System is now reset and the engine may be started.
Turn hazard flashers OFF (Manually).	

If a reset procedure step is not completed within 60 seconds, then the turn signal lights will blink and the reset procedure must be performed again in order to be successful.

Maintaining Your Air Bag System

WARNING!

- **Modifications to any part of the air bag system could cause it to fail when you need it. You could be injured if the air bag system is not there to protect you. Do not modify the components or wiring, including adding any kind of badges or stickers to the steering wheel hub trim cover or the upper right side of the instrument panel. Do not modify the front bumper, vehicle body structure, or add aftermarket side steps or running boards.**
- **It is dangerous to try to repair any part of the air bag system yourself. Be sure to tell anyone who works on your vehicle that it has an air bag system.**
- **Do not attempt to modify any part of your air bag system. The air bag may inflate accidentally or may not function properly if modifications are made. Take your vehicle to an authorized dealer for any air bag system service. If your seat, including your trim cover and cushion, needs to**

(Continued)

WARNING! ***(Continued)***

be serviced in any way (including removal or loosening/tightening of seat attachment bolts), take the vehicle to your authorized dealer. Only manufacturer approved seat accessories may be used. If it is necessary to modify the air bag system for persons with disabilities, contact your authorized dealer.

Event Data Recorder (EDR)

This vehicle is equipped with an event data recorder (EDR). The main purpose of an EDR is to record, in certain crash or near crash-like situations, such as an air bag deployment or hitting a road obstacle, data that will assist in understanding how a vehicle's systems performed. The EDR is designed to record data related to vehicle dynamics and safety systems for a short period of time, typically 30 seconds or less. The EDR in this vehicle is designed to record such data as:

- How various systems in your vehicle were operating;
- Whether or not the driver and passenger safety belts were buckled/fastened;

- How far (if at all) the driver was depressing the accelerator and/or brake pedal; and,
- How fast the vehicle was traveling.

These data can help provide a better understanding of the circumstances in which crashes and injuries occur.

NOTE: EDR data are recorded by your vehicle only if a non-trivial crash situation occurs; no data are recorded by the EDR under normal driving conditions and no personal data (e.g., name, gender, age, and crash location) are recorded. However, other parties, such as law enforcement, could combine the EDR data with the type of personally identifying data routinely acquired during a crash investigation.

To read data recorded by an EDR, special equipment is required, and access to the vehicle or the EDR is needed. In addition to the vehicle manufacturer, other parties, such as law enforcement, that have the special equipment, can read the information if they have access to the vehicle or the EDR.

Child Restraints

Everyone in your vehicle needs to be buckled up at all times, including babies and children. Every state in the United States, and every Canadian province, requires that small children ride in proper restraint systems. This is the law, and you can be prosecuted for ignoring it.

Children 12 years or younger should ride properly buckled up in a rear seat, if available. According to crash statistics, children are safer when properly restrained in the rear seats rather than in the front.

WARNING!

In a collision, an unrestrained child can become a projectile inside the vehicle. The force required to hold even an infant on your lap could become so great that you could not hold the child, no matter how strong you are. The child and others could be badly injured or killed. Any child riding in your vehicle should be in a proper restraint for the child's size.

There are different sizes and types of restraints for children from newborn size to the child almost large enough for an adult safety belt. Always check the child seat Owner's Manual to make sure you have the correct seat for your child. Carefully read and follow all the instructions and warnings in the child restraint Owner's Manual and on all the labels attached to the child restraint.

Before buying any restraint system, make sure that it has a label certifying that it meets all applicable Safety Standards. You should also make sure that you can install it in the vehicle where you will use it.

NOTE:

- For additional information, refer to www.safercar.gov/parents/index.htm or call 1–888–327–4236.
- Canadian residents should refer to Transport Canada's website for additional information: http://www.tc.gc.ca/eng/motorvehiclesafety/safedriverschildsafety-index-53.htm

Summary Of Recommendations For Restraining Children In Vehicles

	Child Size, Height, Weight Or Age	**Recommended Type Of Child Restraint**
Infants and Toddlers	Children who are two years old or younger and who have not reached the height or weight limits of their child restraint	Either an Infant Carrier or a Convertible Child Restraint, facing rearward in the rear seat of the vehicle
Small Children	Children who are at least two years old or who have outgrown the height or weight limit of their rear-facing child restraint	Forward-Facing Child Restraint with a five-point Harness, facing forward in the rear seat of the vehicle

	Child Size, Height, Weight Or Age	Recommended Type Of Child Restraint
Larger Children	Children who have outgrown their forward-facing child restraint, but are too small to properly fit the vehicle's seat belt	Belt Positioning Booster Seat and the vehicle seat belt, seated in the rear seat of the vehicle
Children Too Large for Child Restraints	Children 12 years old or younger, who have outgrown the height or weight limit of their booster seat	Vehicle Seat Belt, seated in the rear seat of the vehicle

Infant And Child Restraints

Safety experts recommend that children ride rear-facing in the vehicle until they are two years old or until they reach either the height or weight limit of their rear-facing child restraint. Two types of child restraints can be used rear-facing: infant carriers and convertible child seats.

The infant carrier is only used rear-facing in the vehicle. It is recommended for children from birth until they reach the weight or height limit of the infant carrier. Convertible child seats can be used either rear-facing or forward-facing in the vehicle. Convertible child seats often have a higher weight limit in the rear-facing direction than infant carriers do, so they can be used rear-facing by children who have outgrown their infant carrier but are still less than at least two years old. Children should remain rear-facing until they reach the highest weight or height allowed by their convertible child seat.

WARNING!

- **Never place a rear-facing child restraint in front of an air bag. A deploying passenger front air bag can cause death or serious injury to a child 12 years or younger, including a child in a rear-facing child restraint.**
- **Only use a rear-facing child restraint in a vehicle with a rear seat.**

Older Children And Child Restraints

Children who are two years old or who have outgrown their rear-facing convertible child seat can ride forward-facing in the vehicle. Forward-facing child seats and convertible child seats used in the forward-facing direction are for children who are over two years old or who have outgrown the rear-facing weight or height limit of their rear-facing convertible child seat. Children should remain in a forward-facing child seat with a harness for as long as possible, up to the highest weight or height allowed by the child seat.

All children whose weight or height is above the forward-facing limit for the child seat should use a belt-positioning booster seat until the vehicle's seat belts fit properly. If the child cannot sit with knees bent over the vehicle's seat cushion while the child's back is against the seatback, they should use a belt-positioning booster seat. The child and belt-positioning booster seat are held in the vehicle by the seat belt.

WARNING!

- **Improper installation can lead to failure of an infant or child restraint. It could come loose in a collision. The child could be badly injured or killed. Follow the child restraint manufacturer's directions exactly when installing an infant or child restraint.**
- **After a child restraint is installed in the vehicle, do not move the vehicle seat forward or rearward because it can loosen the child restraint attachments. Remove the child restraint before adjusting the vehicle seat position. When the vehicle seat has been adjusted, reinstall the child restraint.**
- **When your child restraint is not in use, secure it in the vehicle with the seat belt or LATCH anchorages, or remove it from the vehicle. Do not leave it loose in the vehicle. In a sudden stop or accident, it could strike the occupants or seatbacks and cause serious personal injury.**

Children Too Large For Booster Seats

Children who are large enough to wear the shoulder belt comfortably, and whose legs are long enough to bend over the front of the seat when their back is against the seatback, should use the seat belt in a rear seat. Use this simple 5-step test to decide whether the child can use the vehicle's seat belt alone:

1. Can the child sit all the way back against the back of the vehicle seat?
2. Do the child's knees bend comfortably over the front of the vehicle seat – while the child is still sitting all the way back?
3. Does the shoulder belt cross the child's shoulder between their neck and arm?
4. Is the lap part of the belt as low as possible, touching the child's thighs and not the stomach?
5. Can the child stay seated like this for the whole trip?

If the answer to any of these questions was "no," then the child still needs to use a booster seat in this vehicle.

If the child is using the lap/shoulder belt, check seat belt fit periodically and make sure the seat belt buckle is latched. A child's squirming or slouching can move the belt out of position. If the shoulder belt contacts the face or neck, move the child closer to the center of the vehicle, or use a booster seat to position the seat belt on the child correctly.

WARNING!

Never allow a child to put the shoulder belt under an arm or behind their back. In a crash, the shoulder belt will not protect a child properly, which may result in serious injury or death. A child must always wear both the lap and shoulder portions of the seat belt correctly.

Installing Child Restraints Using The Vehicle Seat Belt

Child restraint systems are designed to be secured in vehicle seats by lap belts or the lap belt portion of a lap/shoulder belt.

WARNING!

- **Improper installation or failure to properly secure a child restraint can lead to failure of the restraint. The child could be badly injured or killed.**
- **Follow the child restraint manufacturer's directions exactly when installing an infant or child restraint.**

The seat belts in the passenger seating positions are equipped with a Switchable Automatic Locking Retractor (ALR) that is designed to keep the lap portion of the seat belt tight around the child restraint so that it is not necessary to use a locking clip. The ALR retractor can be "switched" into a locked mode by pulling all of the webbing out of the retractor and then letting the webbing retract back into the retractor. If it is locked, the ALR will make a clicking noise while the webbing is pulled back into the retractor. Refer to the "Automatic Locking Mode" description in "Switchable Automatic Locking Retractors (ALR)" under "Occupant Restraint Systems" for additional information on ALR.

Please see the table below and the following sections for more information.

Lap/Shoulder Belt Systems For Installing Child Restraints In This Vehicle

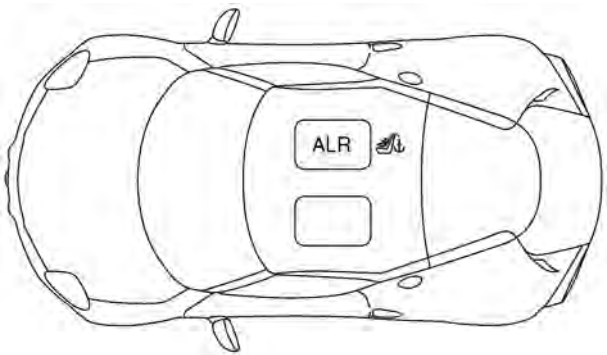

Automatic Locking Retractor (ALR) Location

- ALR = Switchable Automatic Locking Retractor
- Top Tether Anchorage Symbol

Frequently Asked Questions About Installing Child Restraints With Seat Belts		
What is the weight limit (child's weight + weight of the child restraint) for using the Tether Anchor with the seat belt to attach a forward facing child restraint?	Weight limit of the Child Restraint	Always use the tether anchor when using the seat belt to install a forward facing child restraint, up to the recommended weight limit of the child restraint.
Can the head restraints be removed?	No	
Can the buckle stalk be twisted to tighten the seat belt against the belt path of the child restraint?	No	Do not twist the buckle stalk in a seating position with an ALR retractor.

Installing A Child Restraint With A Switchable Automatic Locking Retractor (ALR)

Child restraint systems are designed to be secured in vehicle seats by lap belts or the lap belt portion of a lap/shoulder belt.

WARNING!

- **Improper installation or failure to properly secure a child restraint can lead to failure of the restraint. The child could be badly injured or killed.**
- **Follow the child restraint manufacturer's directions exactly when installing an infant or child restraint.**

1. Place the child seat in the center of the seating position. Move the vehicle seat as far rearward as possible to keep the child as far from the advanced passenger air bag as possible.
2. Pull enough of the seat belt webbing from the retractor to pass it through the belt path of the child restraint. Do not twist the belt webbing in the belt path.
3. Slide the latch plate into the buckle until you hear a "click."
4. Pull on the webbing to make the lap portion tight against the child seat.

5. To lock the seat belt, pull down on the shoulder part of the belt until you have pulled all the seat belt webbing out of the retractor. Then, allow the webbing to retract back into the retractor. As the webbing retracts, you will hear a clicking sound. This means the seat belt is now in the Automatic Locking mode.
6. Try to pull the webbing out of the retractor. If it is locked, you should not be able to pull out any webbing. If the retractor is not locked, repeat step 5.
7. Finally, pull up on any excess webbing to tighten the lap portion around the child restraint while you push the child restraint rearward and downward into the vehicle seat.
8. If the child restraint has a top tether strap and the seating position has a top tether anchorage, connect the tether strap to the anchorage and tighten the tether strap. See the section "Installing Child Restraints Using the Top Tether Anchorage" for directions to attach a tether anchor.
9. Test that the child restraint is installed tightly by pulling back and forth on the child seat at the belt path. It should not move more than 1 inch (25.4 mm) in any direction.

Any seat belt system will loosen with time, so check the belt occasionally, and pull it tight if necessary.

Installing Child Restraints Using The Top Tether Anchorage:

Always use the tether anchor when using the seat belt to install a forward facing child restraint, up to the recommended weight limit of the child restraint. This vehicle is equipped with a tether anchorage, located behind the front passenger seat, near the floor.

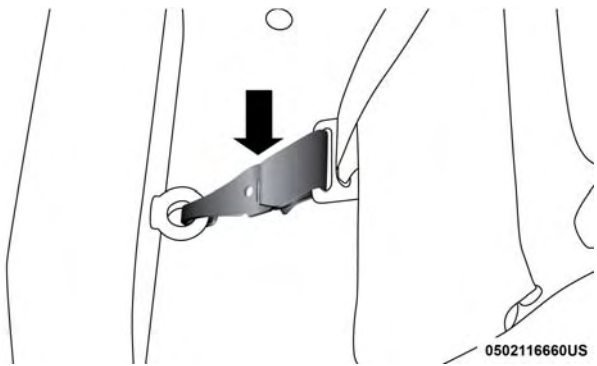

Upper Tether Anchorage

1. Look behind the seating position where you plan to install the child restraint to find the tether anchorage. You may need to move the seat forward to provide

better access to the tether anchorage. If there is no top tether anchorage for that seating position, move the child restraint to another position in the vehicle if one is available.

2. Route the tether strap around the outboard side of the head restraint to the tether anchorage.
3. Attach the tether strap hook of the child restraint to the top tether anchorage as shown in the diagram.
4. Remove slack in the tether strap according to the child restraint manufacturer's instructions.

WARNING!

An incorrectly anchored tether strap could lead to increased head motion and possible injury to the child. Use only the anchorage position directly behind the child seat to secure a child restraint top tether strap.

Transporting Pets

Air Bags deploying in the front seat could harm your pet. An unrestrained pet will be thrown about and possibly injured, or injure a passenger during panic braking or in a collision.

Pets should be restrained in the rear seat in pet harnesses or pet carriers that are secured by seat belts.

SAFETY TIPS

Transporting Passengers

NEVER TRANSPORT PASSENGERS IN THE CARGO AREA.

WARNING!

- **Do not leave children or animals inside parked vehicles in hot weather. Interior heat build-up may cause serious injury or death.**
- **It is extremely dangerous to ride in a cargo area, inside or outside of a vehicle. In a collision, people riding in these areas are more likely to be seriously injured or killed.**
- **Do not allow people to ride in any area of your vehicle that is not equipped with seats and seat belts.**
- **Be sure everyone in your vehicle is in a seat and using a seat belt properly.**

Exhaust Gas

WARNING!

Exhaust gases can injure or kill. They contain carbon monoxide (CO), which is colorless and odorless. Breathing it can make you unconscious and can eventually poison you. To avoid breathing (CO), follow these safety tips:

- **Do not run the engine in a closed garage or in confined areas any longer than needed to move your vehicle in or out of the area.**
- **If you are required to drive with the trunk/liftgate/rear doors open, make sure that all windows are closed and the climate control BLOWER switch is set at high speed. DO NOT use the recirculation mode.**
- **If it is necessary to sit in a parked vehicle with the engine running, adjust your heating or cooling controls to force outside air into the vehicle. Set the blower at high speed.**

The best protection against carbon monoxide entry into the vehicle body is a properly maintained engine exhaust system.

Whenever a change is noticed in the sound of the exhaust system, when exhaust fumes can be detected inside the vehicle, or when the underside or rear of the vehicle is damaged, have a competent mechanic inspect the complete exhaust system and adjacent body areas for broken, damaged, deteriorated, or mispositioned parts. Open seams or loose connections could permit exhaust fumes to seep into the passenger compartment. In addition, inspect the exhaust system each time the vehicle is raised for lubrication or oil change. Replace as required.

Safety Checks You Should Make Inside The Vehicle

Seat Belts

Inspect the seat belt system periodically, checking for cuts, frays, and loose parts. Damaged parts must be replaced immediately. Do not disassemble or modify the system.

Front seat belt assemblies must be replaced after a collision. Rear seat belt assemblies must be replaced after a collision if they have been damaged (i.e., bent retractor, torn webbing, etc.). If there is any question regarding seat belt or retractor condition, replace the seat belt.

Air Bag Warning Light

The Air Bag warning light will turn on for four to eight seconds as a bulb check when the ignition switch is first turned to ON/RUN. If the light is either not on during starting, stays on, or turns on while driving, have the system inspected at your authorized dealer as soon as possible. After the bulb check, this light will illuminate with a single chime when a fault with the Air Bag System has been detected. It will stay on until the fault is cleared. If the light comes on intermittently or remains on while driving, have your authorized dealer service the vehicle immediately. Refer to "Occupant Restraint Systems" in "Safety" for further information.

Defroster

Check operation by selecting the defrost mode and place the blower control on high speed. You should be able to feel the air directed against the windshield. See your authorized dealer for service if your defroster is inoperable.

Floor Mat Safety Information

Always use floor mats designed to fit your vehicle. Only use a floor mat that does not interfere with the operation of the accelerator, brake or clutch pedals. Only use a floor mat that is securely attached using the floor mat fasteners so it cannot slip out of position and interfere with the accelerator, brake or clutch pedals or impair safe operation of your vehicle in other ways.

WARNING!

An improperly attached, damaged, folded, or stacked floor mat, or damaged floor mat fasteners may cause your floor mat to interfere with the accelerator, brake, or clutch pedals and cause a loss of vehicle control. To prevent SERIOUS INJURY or DEATH:

- **ALWAYS securely attach your floor mat using the floor mat fasteners. DO NOT install your floor mat upside down or turn your floor mat over. Lightly pull to confirm mat is secured using the floor mat fasteners on a regular basis.**
- **ALWAYS REMOVE THE EXISTING FLOOR MAT FROM THE VEHICLE before installing any other floor mat. NEVER install or stack an additional floor mat on top of an existing floor mat.**

(Continued)

WARNING! *(Continued)*

- ONLY install floor mats designed to fit your vehicle. NEVER install a floor mat that cannot be properly attached and secured to your vehicle. If a floor mat needs to be replaced, only use a FCA approved floor mat for the specific make, model, and year of your vehicle.
- ONLY use the driver's side floor mat on the driver's side floor area. To check for interference, with the vehicle properly parked with the engine off, fully depress the accelerator, the brake, and the clutch pedal (if present) to check for interference. If your floor mat interferes with the operation of any pedal, or is not secure to the floor, remove the floor mat from the vehicle and place the floor mat in your trunk.
- ONLY use the passenger's side floor mat on the passenger's side floor area.
- ALWAYS make sure objects cannot fall or slide into the driver's side floor area when the vehicle is moving. Objects can become trapped under accelerator, brake, or clutch pedals and could cause a loss of vehicle control.

(Continued)

WARNING! *(Continued)*

- NEVER place any objects under the floor mat (e.g., towels, keys, etc.). These objects could change the position of the floor mat and may cause interference with the accelerator, brake, or clutch pedals.
- If the vehicle carpet has been removed and re-installed, always properly attach carpet to the floor and check the floor mat fasteners are secure to the vehicle carpet. Fully depress each pedal to check for interference with the accelerator, brake, or clutch pedals then re-install the floor mats.
- It is recommended to only use mild soap and water to clean your floor mats. After cleaning, always check your floor mat has been properly installed and is secured to your vehicle using the floor mat fasteners by lightly pulling mat.

Periodic Safety Checks You Should Make Outside The Vehicle

Tires

Examine tires for excessive tread wear and uneven wear patterns. Check for stones, nails, glass, or other objects lodged in the tread or sidewall. Inspect the tread for cuts and cracks. Inspect sidewalls for cuts, cracks, and bulges. Check the wheel nuts for tightness. Check the tires (including spare) for proper cold inflation pressure.

Lights

Have someone observe the operation of brake lights and exterior lights while you work the controls. Check turn signal and high beam indicator lights on the instrument panel.

Door Latches

Check for proper closing, latching, and locking.

Fluid Leaks

Check area under the vehicle after overnight parking for fuel, coolant, oil, or other fluid leaks. Also, if gasoline fumes are detected or if fuel, or brake fluid leaks are suspected. The cause should be located and corrected immediately.

STARTING AND OPERATING

CONTENTS

■ STARTING THE ENGINE 131
- □ Automatic Transmission 131
- □ Normal Starting. 132
- □ Cold Weather Operation 132
- □ If Engine Fails To Start 132
- □ After Starting 133
- □ Turbo Charger “Cool Down” 133

■ ENGINE BREAK-IN RECOMMENDATIONS . .133

■ PARKING BRAKE 134

■ SIX-SPEED ALFA TWIN CLUTCH TRANSMISSION 135
- □ Using The Transmission 136

■ ALFA DNA SYSTEM (DYNAMIC VEHICLE CONTROL SYSTEM) 141
- □ Driving Modes 141
- □ System Failure. 145
- □ Launch Control 145

■ SPEED CONTROL — IF EQUIPPED 146
- □ To Activate 146
- □ To Set A Desired Speed 146
- □ To Vary The Speed Setting 147
- □ To Accelerate For Passing 148
- □ To Resume Speed 148
- □ To Deactivate 148

■ PARKING SENSORS — IF EQUIPPED 148
- □ Acoustic Signal 149
- □ Indications On Display — If Equipped 149
- □ Activation/Deactivation 150
- □ Fault Indication 150

- General Warnings 150
- ADDING FUEL/SMART FUEL 152
- TRAILER TOWING 154
- RECREATIONAL TOWING (BEHIND MOTORHOME, ETC.) 154
- Towing This Vehicle Behind Another Vehicle .154
- DRIVING TIPS. 155
- Driving On Slippery Surfaces 155
- Driving Through Water 156

STARTING THE ENGINE

Before starting your vehicle, adjust your seat, adjust both inside and outside mirrors, and fasten your seat belts.

WARNING!

- **Never leave children alone in a vehicle, or with access to an unlocked vehicle.**
- **Allowing children to be in a vehicle unattended is dangerous for a number of reasons. A child or others could be seriously or fatally injured. Children should be warned not to touch the parking brake, brake pedal or the transmission gear selector.**
- **Do not leave the key fob in or near the vehicle (or in a location accessible to children). A child could operate power windows, other controls, or move the vehicle.**

Automatic Transmission

To start the engine, press the brake pedal. The system engages NEUTRAL (N) automatically.

After the starting procedure, FIRST (1st) gear or REVERSE (R) can be engaged.

Irrespective of the mode selected (AUTO/MANUAL), to engage FIRST (1st) gear or REVERSE (R), it is necessary to press the brake pedal and push the 1 button on the transmission control panel (or the "+" steering wheel stalk) to engage FIRST (1st) gear or the R button to engage REVERSE (R).

When FIRST (1st) gear is engaged, the system sets itself to AUTO mode.

NEUTRAL (N) can be engaged again by pushing the N button with the brake pedal pressed.

When the 1, N, or R buttons are pushed (or "+" steering wheel stalk is operated) without pressing the brake pedal, no gear change request is implemented by the system.

NOTE: REVERSE (R) cannot be engaged by pushing the "-" stalk on the steering wheel.

Normal Starting

NOTE: Normal starting of either a cold or a warm engine is obtained without pumping or pressing the accelerator pedal.

Turn the ignition switch to the AVV/ACC (START) position and release it when the engine starts. If the engine fails to start within 10 seconds, turn the ignition switch to the STOP (OFF/LOCK) position, wait 10 to 15 seconds, then repeat the "Normal Starting" procedure.

Cold Weather Operation

Your engine is designed to operate at temperatures as low as 0°F (-18°C).

CAUTION!

Use of the recommended oil and adhering to the prescribed oil change intervals is important to prevent engine damage and ensure satisfactory starting in cold conditions.

If Engine Fails To Start

WARNING!

Never pour fuel or other flammable liquids into the throttle body air inlet opening in an attempt to start the vehicle. This could result in a flash fire causing serious personal injury.

CAUTION!

- **Do not attempt to push or tow your vehicle to get it started. Vehicles equipped with a Alfa Twin Clutch Transmission cannot be started this way. Unburned fuel could enter the catalytic converter and once the engine has started, ignite and damage the converter and vehicle.**
- **To prevent damage to the starter, do not continuously crank the engine for more than 15 seconds at a time. Wait 10 to 15 seconds before trying again.**

After Starting

The idle speed is controlled automatically, and it will decrease as the engine warms up.

Turbo Charger "Cool Down"

This vehicle is equipped with an after-run pump to cool the turbocharger after the engine is shut off. Depending on the type of driving and the amount of cargo, the pump will run for up to five minutes after the engine has been shut off to circulate coolant through the turbocharger.

Although the pump is rubber-mounted for quiet operation, it is normal to hear it running during this time.

ENGINE BREAK-IN RECOMMENDATIONS

A long break-in period is not required for the drivetrain (engine, transmission, and rear axle) in your new vehicle.

Driving your vehicle with a new transmission requires no special techniques but, to reach optimal shifting quality and help with engine Break-in, Dynamic and Race Mode will be inhibited until the vehicle has accumulated 155 miles (250 km).

Additionally, for the first 200 miles (300 km), following these few simple guidelines is all that is necessary for a good break-in.

- Avoid very aggressive driving.
- Avoid driving at a constant speed, either fast or slow, for long periods.
- Do not make any full throttle starts and avoid full throttle acceleration while cruising within the posted speed limits of local traffic laws.
- Use the proper gear for your speed range.
- Wait until the engine has reached normal operating temperature before driving at the recommended maximum break-in speed.
- Avoid excessive idling.
- Check the engine oil level at every fuel fill.

PARKING BRAKE

Before leaving the vehicle, make sure that the parking brake is fully applied. Also, be certain to leave manual transmission in REVERSE (R) or FIRST (1st) gear.

The parking brake lever is located in the central tunnel. To apply the parking brake, pull the parking brake lever up as firmly as possible. To release the parking brake, pull the parking brake lever up slightly, push the center button, then lower the parking brake lever completely.

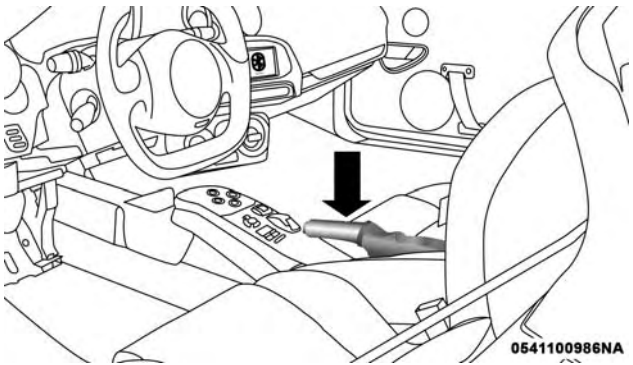

Parking Brake Lever

When the parking brake is applied with the ignition switch in the MAR (ACC/ON/RUN) position, the Brake Warning Light in the instrument cluster display will illuminate.

When parking on a hill, it is important to turn the front wheels toward the curb on a downhill grade and away from the curb on an uphill grade. The parking brake should always be applied whenever the driver is not in the vehicle.

WARNING!

- **Never leave children alone in a vehicle, or with access to an unlocked vehicle.**
- **Allowing children to be in a vehicle unattended is dangerous for a number of reasons. A child or others could be seriously or fatally injured. Children should be warned not to touch the parking brake, brake pedal or the transmission gear selector.**
- **Do not leave the key fob in or near the vehicle or in a location accessible to children. A child could operate power windows, other controls, or move the vehicle.**

(Continued)

WARNING! *(Continued)*

- Be sure the parking brake is fully disengaged before driving; failure to do so can lead to brake failure and a collision.
- Always fully apply the parking brake when leaving your vehicle, or it may roll and cause damage or injury. Also be certain to leave a manual transmission in REVERSE or FIRST gear. Failure to do so may allow the vehicle to roll and cause damage or injury.

CAUTION!

If the Brake Warning Light remains on with the parking brake released, a brake system malfunction is indicated. Have the brake system serviced by an authorized dealer immediately.

SIX-SPEED ALFA TWIN CLUTCH TRANSMISSION

WARNING!

- It is dangerous to shift out of NEUTRAL if the engine speed is higher than idle speed. If your foot is not firmly pressing the brake pedal, the vehicle could accelerate quickly forward or in reverse. You could lose control of the vehicle and hit someone or something. Only shift into gear when the engine is idling normally and your foot is firmly pressing the brake pedal.
- Unintended movement of a vehicle could injure those in or near the vehicle. As with all vehicles, you should never exit a vehicle while the engine is running.
- Before exiting the vehicle, always come to a complete stop, then apply the parking brake, shift the transmission into FIRST gear or REVERSE, turn the engine OFF, remove the key fob, and lock the vehicle.
- Never leave children alone in a vehicle, or with access to an unlocked vehicle. Allowing children

(Continued)

WARNING! *(Continued)*

to be in a vehicle unattended is dangerous for a number of reasons. A child or others could be seriously or fatally injured. Children should be warned not to touch the parking brake, brake pedal or the transmission gear selector.

- **Do not leave the key fob in or near the vehicle (or in a location accessible to children). A child could operate power windows, other controls, or move the vehicle.**

Using The Transmission

This vehicle is equipped with a Six-Speed Alfa Twin Clutch transmission with steering wheel mounted shift paddles.

When the ignition is in the OFF position, the transmission controls (shift paddles on the steering wheel, and gear selector buttons on the center console) are disabled.

When the key is turned to the ON position, the current transmission gear will be displayed in the instrument cluster, along with the "AUTO" indicator. This indicates the transmission is in Automatic mode.

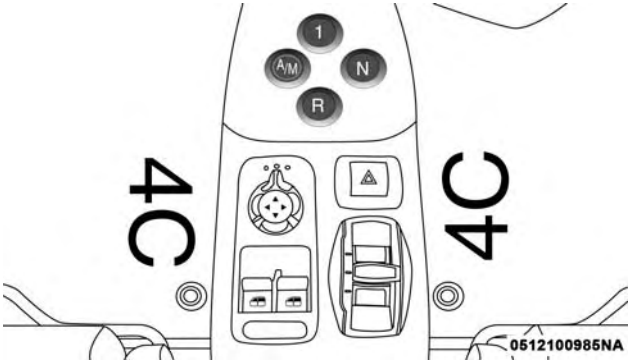

Transmission Gear Selector

Operating Modes

The transmission has two normal operating modes (except when the "Race" mode is selected on the DNA switch):

- MANUAL mode: The driver must shift gears manually (using the steering wheel mounted shift paddles).
- Automatic (AUTO) mode: The system shifts between all forward gears automatically.

When the "Race" mode is selected via the DNA selector, the only allowed transmission operating mode is MANUAL.

MANUAL Mode

In this operating mode, the driver is responsible for choosing the best gear to engage, depending on the vehicle's operating conditions. The current gear is displayed in the instrument cluster.

To activate/deactivate MANUAL mode, push the A/M button on the center console when the transmission is in any forward gear.

Use the "+" shift paddle to engage a higher gear, or the "–" paddle to engage a lower gear.

If a requested gear shift is not allowed (typically, because it would cause engine overspeed or lugging), an acoustic signal will sound and the transmission will remain in the existing gear.

The transmission will automatically downshift during closed-throttle decelerations, to prevent engine lugging. When coming to a stop, the transmission will automatically select FIRST (1st) gear. The driver must manually upshift the transmission (by tapping the + shift paddle) as the vehicle accelerates.

NOTE: To provide better comfort, the transmission will up-shift to the next available gear if the engine speed limit is reached. This feature is only available in NATURAL and ALL WEATHER Modes.

AUTO Mode

In AUTO mode the transmission shifts gears automatically depending on vehicle speed, engine RPM, and accelerator pedal position.

AUTO is the default operating mode at startup. When in AUTO mode, "AUTO" appears in the instrument cluster, adjacent to the current gear display.

To toggle between AUTO and MANUAL modes, push the A/M button on the center console.

Accelerating From A Stop

FIRST (1) and REVERSE (R) can only be engaged (at a stop) when the brake pedal is pressed.

To drive, press the brake pedal, and select 1 (1st) or R (REVERSE) using the transmission gear selector buttons on the center console. Then release the brake pedal and smoothly press the accelerator pedal.

NOTE:

- The vehicle will not "creep" when the brake pedal is released, and may in fact roll down on an incline. Leaving from a stop, the accelerator pedal must be pressed to transmit driving torque to the wheels.
- When starting on a fairly steep incline, it may be helpful to engage the parking brake.
- The vehicle can only be launched (from a stop) in FIRST (1) or REVERSE (R). Second gear (or higher) cannot be engaged when the vehicle is stationary.
- If the brake pedal is not depressed (and the vehicle is stationary for a period of time), the transmission will automatically engage NEUTRAL (N).
- FIRST (1) and REVERSE (R) gears can only be engaged at vehicle speeds below 2 mph (3 km/h). At speeds below 6 mph (10 km/h), attempts to shift from 1 to R (or R to 1) will only be allowed if the vehicle speed drops below the 2 mph (3 km/h) threshold within three seconds of the request; otherwise, the transmission will shift to NEUTRAL (N). The driver should then repeat the request for 1st or R once the vehicle has come to a stop.

Shift Paddles

In MANUAL mode, the steering wheel mounted shift paddles (labeled + and -) control the transmission shifting.

Tapping the (+) paddle will upshift the transmission to the next higher gear, while tapping the (-) paddle will downshift to the next lower gear. The current gear is displayed in the instrument cluster. If a requested shift would cause engine lugging or overspeed, that request will be ignored.

In AUTO mode, tapping a shift paddle will temporarily place the transmission in MANUAL mode, and execute the requested upshift or downshift (if allowable). The transmission will then return to AUTO mode after a brief interval.

Pressing a shift paddle will only shift the transmission one gear at a time. Holding a paddle depressed will not command multiple shifts; the paddle must be pressed multiple times in succession to generate multiple shifts.

Neutral (N)

Use this range when the vehicle is standing for prolonged periods with the engine running. Always apply the parking brake if you must exit the vehicle.

At engine startup, the transmission will automatically select NEUTRAL (N) and AUTO mode. The brake pedal must be pressed when starting the engine.

To select NEUTRAL (N) when the vehicle is stationary, turn the ignition key to the MAR-ON position (engine running or not), press the brake pedal, and push the N button on the transmission gear selector.

When the vehicle is moving (with ignition ON), pushing the NEUTRAL (N) button will engage N, regardless of whether the brake pedal is pressed.

WARNING!

Do not coast in NEUTRAL and never turn off the ignition to coast down a hill. Coasting in NEUTRAL and turning off the ignition while coasting severely limit your ability to respond to changing traffic or road conditions. Failure to follow this WARNING may result in loss of vehicle control, collision, and serious injury or death.

With the vehicle in motion, to engage a gear from the NEUTRAL (N) position, push the 1 button on the transmission control panel (it is not necessary to press the brake pedal). The transmission will engage the correct gear according to the vehicle's speed.

Acoustic Signal

If the vehicle is stationary with the engine running and FIRST (1) or REVERSE (R) engaged, the system activates an acoustic signal and automatically places the transmission in NEUTRAL (N) when:

- The accelerator and/or brake pedal are not operated for at least three minutes.
- The brake pedal is pressed for longer than 10 minutes.
- The driver's door is opened and the accelerator pedal or the brake pedal are not operated for at least one and a half seconds.
- A fault has been detected in the transmission.

Parking The Vehicle

When parking and leaving the vehicle, proceed as follows:

1. Make sure that the vehicle has come to a complete stop.
2. With the brake pedal depressed, put the vehicle into either a forward or reverse gear by pushing 1 or R. (The vehicle may already be in 1 or R if you were just driving.)
3. Engage the parking brake.
4. Turn off and remove the key.
5. Release the brake pedal.

When parking on an incline, turn the front wheels toward the curb on a downhill slope and away from the curb on an uphill slope. Always chock the wheels when parking on steep grades.

General Notes

When the vehicle is stopped and in gear, always keep the brake pedal pressed until you decide to set off, then release the brake and accelerate gradually.

During prolonged stops with the engine running, it is advisable to keep the transmission in NEUTRAL (N).

When stopped on an incline, always hold the vehicle in place using the brakes. On steep inclines, Hill Start Assist (HSA) will temporarily hold the vehicle in position when the brake pedal is released. If the accelerator pedal is not applied after a short time, the vehicle will roll back. Either reapply the brake (to hold the vehicle) or press the accelerator to climb the hill.

Only shift between FIRST (1) and REVERSE (R) when completely stopped, with the brake pedal pressed.

When necessary, it is possible to engage FIRST (1), REVERSE (R) or NEUTRAL (N) with the engine off, the key at MAR-ON and the brake pressed. In this case, wait at least five seconds between one gear change and the next, in order to safeguard the operation of the hydraulic system, and the pump in particular.

For uphill departures, accelerate gradually but fully, immediately after releasing the parking brake or the brake pedal; this allows the engine speed to increase to provide more torque at the wheels.

ALFA DNA SYSTEM (DYNAMIC VEHICLE CONTROL SYSTEM)

This vehicle is equipped with a "Alfa DNA" system lever (located on the center console). There are four modes of operation to be selected according to driving style and road conditions:

- Dynamic (This mode alters the transmission's automatic shift schedule for sportier driving [D]).
- Natural (mode for driving in normal conditions [N]).
- All Weather (mode for driving in poor grip conditions, such as rain and snow [A]).
- Race (sports driving mode [D]).

This also acts on the dynamic vehicle control systems (engine, gearbox/transmission, ESC system).

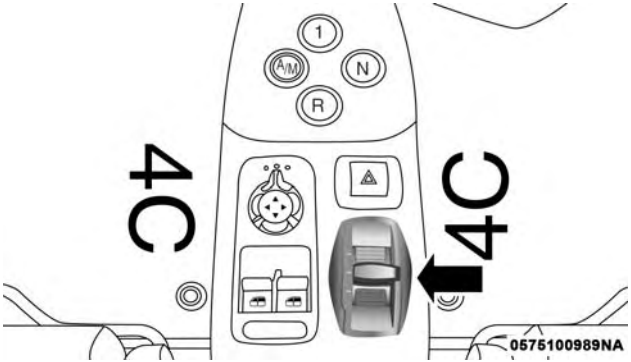

Alfa DNA Mode Selector

Driving Modes

The Alfa DNA system lever will always return to the center position after use.

The selected driving mode is indicated by the corresponding LED switching in the panel and by an indication on the display.

Dynamic Mode

Activation

Move the Alfa DNA system lever upwards (to the letter "D") and hold in this position for half a second, until the corresponding LED lights up and the Dynamic mode activation indicator appears on the display.

When Dynamic mode is activated, the turbocharger pressure and engine oil temperature screen is displayed automatically. When released, the Alfa DNA system lever will return to the central position.

NOTE: Dynamic Mode will be inhibited until the vehicle has accumulated 155 miles (250 km).

Electronic Stability Control (ESC) and Anti-Slip Regulation (ASR) systems:

The ESC and ASR system ensures more enjoyable, sportier driving while guaranteeing the stability of the vehicle.

Electronic Q2 system:

The system increases vehicle stability while accelerating on bends, improving the agility of the vehicle.

Engine And Gearbox/Transmission:

The system adjusts the transmission shift calibration for sportier shifting.

NOTE: In Dynamic mode, the engine response to the accelerator pedal position increases considerably. Consequently, driving is less fluid and comfortable.

Deactivation

To deactivate Dynamic mode and return to Natural, move lever downwards (to letter "A") and hold for half a second.

The LED corresponding to Natural mode will light up and the Natural mode activation indication will appear on the display.

Race Mode

Activation

Starting in Dynamic mode, move the Alfa DNA system lever upwards (to the letter "D") and hold in this position for five seconds, until the Race mode activation indicator appears on the display.

When Race mode is activated, the longitudinal/lateral accelerometer indicator screen (G-meter information) is displayed automatically. This considers gravitational acceleration (G).

Electronic Stability Control (ESC) and Anti-Slip Regulation (ASR) systems:

These systems are deactivated in order to ensure the fullest sensation of sport, leaving the driver in full control of the vehicle. When the vehicle is in unstable conditions, the ESC reactivates automatically when the brake pedal is pressed until the ABS intervenes, thus returning the vehicle to stable conditions. To deactivate the ESC and ASR systems, reactivate Race mode.

Electronic Q2 system:

The system increases vehicle stability while accelerating on bends, improving the agility of the vehicle.

Engine And Gearbox/Transmission:

The system adjusts the transmission shift calibration for sportier shifting.

NOTE: In Race mode, the sensitivity of the accelerator pedal increases considerably. Consequently, driving is less fluid and comfortable.

In Race mode, the transmission only works in MANUAL mode.

Deactivation

To deactivate Race mode and return to Dynamic mode, move the Alfa DNA system lever downwards (to letter "A") and keep it in this position for half a second.

The LED corresponding to Dynamic mode will light up and the Dynamic mode activation indication will appear on the display.

Natural Mode

Electronic Stability Control (ESC) and Anti-Slip Regulation (ASR) systems:

ESC and ASR system thresholds are aimed at providing comfort and safety in normal grip and driving conditions.

Electronic Q2 system:

The system is calibrated to ensure the best driving comfort.

Engine And Gearbox/Transmission:

Standard response shifting.

All Weather Mode

Activation

Move the Alfa DNA system lever downwards (to the letter "A") and hold in this position for half a second, until the corresponding LED lights up and the All Weather mode activation indicator appears on the display.

Electronic Stability Control (ESC) and Anti-Slip Regulation (ASR) systems:

ESC and ASR system thresholds are aimed at ensuring maximum safety in low-grip driving conditions. It is advisable to select All Weather mode in the presence of low-grip road surfaces.

Electronic Q2 System:

The system is deactivated.

Engine And Gearbox/Transmission:

Standard response shifting.

Deactivation

To deactivate All Weather mode and return to Natural mode, move the Alfa DNA system lever upwards (to letter "D") and keep it in this position for half a second.

NOTE:

- When the engine is next started, All Weather mode or Natural mode will be retained when the vehicle is restarted.
- When the engine is next started, Race mode or Dynamic mode previously selected is not retained. The system will reactivate in Natural mode.
- It is not possible to go directly from Dynamic mode to All Weather mode and vice versa. You must always first go back to Natural mode and then select the other mode.

System Failure

In the event of system failure or a fault with the gear selector, no driving modes can be selected.

The display will become grey (same screen as "Natural" mode) but without an indication of the Alfa DNA setting. The display will also show a warning message.

Please contact your authorized dealer for service.

Launch Control

The Launch Control strategy permits high-performance acceleration from stand still.

This strategy can be activated with vehicle at a standstill, Race mode selected and FIRST (1st) gear engaged.

The sequence of operations to perform is as follows:

1. Press the brake pedal and hold it down.
2. Press the accelerator pedal and hold it down.
3. Press the "–" paddle behind the steering wheel. (This allows the engine to rev above the 3000 RPM limit.)

When the brake pedal is released, the vehicle will start with maximum acceleration. Despite the MANUAL mode, the vehicle will automatically shift the gear to guarantee maximum acceleration, once the correct shifting speed has been reached.

WARNING!

Launch Control is intended for off-highway or off-road use only and should not be used on any public roadways. Use Launch Control only in a controlled and dry track environment; within the limits of the law. Actual Launch Control performance may change depending on the surface and current traction conditions. The capabilities of the vehicle as measured by the performance pages must never be exploited in a reckless or dangerous manner, which can jeopardize the user's safety or the safety of others. Only a safe, attentive, and skillful driver can prevent accidents. Failure to follow this warning may result in serious injury or death.

To discontinue the strategy, simply interrupt the above sequence of operations or release the accelerator pedal.

SPEED CONTROL — IF EQUIPPED

When engaged, the Speed Control takes over accelerator operations at speeds greater than 18 mph (30 km/h), up to the maximum speed of 105 mph (170 km/h).

The Speed Control Lever is located on the left side of the steering column.

NOTE: In order to ensure proper operation, the Speed Control system has been designed to shut down if multiple speed control functions are operated at the same time. If this occurs, the Speed Control system can be reactivated rotating the end of the multifunction lever (on/off) and resetting the desired vehicle set speed.

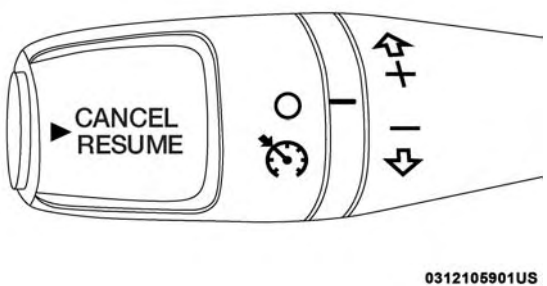

Speed Control Lever

To Activate

Rotate the end of the multifunction lever upward to the first detent, indicated by the speed control icon, to activate the Speed Control. The Cruise Control Indicator Light in the instrument cluster display will illuminate. To turn the system off, rotate the end of the multifunction lever to the O (off) position. The Cruise Control Indicator Light will turn off. The system should be turned off when not in use.

WARNING!

Leaving the Speed Control system on when not in use is dangerous. You could accidentally set the system or cause it to go faster than you want. You could lose control and have an accident. Always leave the system off when you are not using it.

To Set A Desired Speed

Turn the Speed Control on. When the vehicle has reached the desired speed, move the speed control lever upward (+), and release. Release the accelerator, and the vehicle will operate at the set speed.

NOTE: The vehicle should be traveling at a steady speed, and on level ground before setting the speed control.

To Vary The Speed Setting

To Increase Speed

When the Speed Control is set, you can increase speed by tapping the speed control lever up (+).

The speed increment shown is dependant on the speed of U.S. (mph) or Metric (km/h) units:

U.S. Speed (mph)

- Tapping the speed control lever up (+) once will result in a one mph increase in set speed. Each subsequent tap of the lever results in an increase of one mph.
- If the lever is continually help up, the set speed will continue to increase until the lever is released, then the new set speed will be established.

Metric Speed (km/h)

- Tapping the speed control lever up (+) once will result in a two km/h increase in set speed. Each subsequent tap of the lever results in an increase of two km/h.
- If the lever is continually help up, the set speed will continue to increase until the lever is released, then the new set speed will be established.

To Decrease Speed

When the Speed Control is set, you can decrease speed by tapping the speed control lever down (-).

The speed decrement shown is dependant on the speed of U.S. (mph) or Metric (km/h) units:

U.S. Speed (mph)

- Tapping the speed control lever down (-) once will result in a one mph decrease in set speed. Each subsequent tap of the lever results in a decrease of one mph.
- If the lever is continually held down, the set speed will continue to decrease until the lever is released, then the new set speed will be established.

Metric Speed (km/h)

- Tapping the speed control lever down (-) once will result in a two km/h decrease in set speed. Each subsequent tap of the lever results in a decrease of two km/h.
- If the lever is continually held down, the set speed will continue to decrease until the lever is released, then the new set speed will be established.

To Accelerate For Passing

Press the accelerator as you would normally. When the pedal is released, the vehicle will return to the set speed.

To Resume Speed

To resume a previously set speed, push the RESUME button, located on the end of the speed control stalk, and release. Resume can be used at any speed above 18 mph (30 km/h).

To Deactivate

A soft tap on the brake pedal, pushing the CANCEL/RESUME button on the end of the stalk, or normal brake pressure while slowing the vehicle will deactivate the Speed Control without erasing the set speed memory. Rotating the end of the multifunction lever to the O (off) position, or turning the ignition switch to OFF, erases the set speed memory.

PARKING SENSORS — IF EQUIPPED

The vehicle's parking sensors are located in the rear bumper, and will detect the presence of any obstacles near the rear part of the vehicle while moving in REVERSE gear. The driver is then informed through an intermittent acoustic signal.

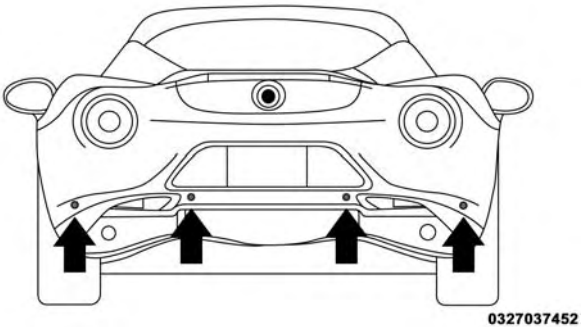

Parking Sensors

Acoustic Signal

When REVERSE gear is engaged, and there is an obstacle behind the vehicle, an acoustic signal is emitted which varies according to the distance of the bumper from the obstacle.

The frequency of the acoustic signal:

- Increases as the distance between vehicle and obstacle decreases, culminating in a continuous acoustic signal when the distance is less than approximately 12 inches (30 cm).
- Decreases if the distance from the obstacle increases, until the signal ceases entirely.
- Remains constant if the distance between vehicle and obstacle remains unchanged; if this situation concerns the side sensors, the signal will stop after approximately 3 seconds, for example, in the event of manoeuvres along a wall.

If several obstacles are detected by the sensors, only the nearest one is considered.

Indications On Display — If Equipped

When the sensors are activated, the parking sensor display screen appears in the instrument cluster.

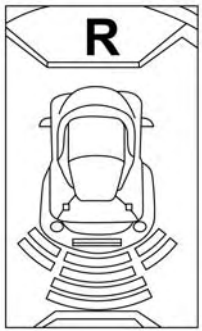

0327037451

Parking Sensor Display Screen

Obstacle presence and distance information is therefore provided both by the acoustic signal and the instrument cluster display.

The system indicates a detected obstacle by displaying an arc in one or more positions according to the distance of the obstacle and its position in relation to the vehicle.

If an obstacle is detected in the rear central area, the instrument cluster display shows all the arcs in the rear central area, up to the one that corresponds to the position of the obstacle itself.

The signal is similar for obstacles in the rear left or right area.

The arc that corresponds to the position of the obstacle will flash.

The color on the instrument cluster display depends on the distance from and position of the obstacle.

The vehicle is close to the obstacle when the instrument cluster display shows a single constant arc and emits a continuous sound.

If there are several obstacles, the closest one is indicated.

Activation/Deactivation

The sensors are automatically activated when REVERSE gear is engaged. As the obstacle behind the vehicle gets closer, the acoustic signal becomes more frequent.

Fault Indication

Parking sensor failures, if any, will be indicated when REVERSE gear is engaged by the switching on of the warning light in the instrument cluster display.

General Warnings

When parking, take the utmost care over obstacles that may be above or under the sensor.

Under certain circumstances, objects close to the vehicle are not detected by the system and could therefore cause damage to the vehicle or be damaged themselves.

Some conditions may influence the performance of the parking sensors:

- The presence of ice, snow, mud or multiple layers of paint on the sensor surface may cause reduced sensitivity of the sensor itself and therefore reduce the system performance.
- Mechanical interference (e.g washing the vehicle, rain, strong wind, hail) may cause the sensor to detect a non-existent obstacle (“echo interference”).
- The presence of ultrasonic systems (e.g. pneumatic brake systems of trucks or pneumatic drills) near the vehicle could alter the signals sent by the sensor.

- The variation in sensor position, caused by variation in ride (due to suspension component wear), changing tires, overloaded vehicle, or tuning that lowers the vehicle, for example, may affect parking sensor system performance.

NOTE: The sensor must be free from mud, dirt snow or ice in order for the system to operate correctly. Be careful not to scratch or damage the sensors while cleaning them. Avoid using dry, rough or hard cloths. The sensors must be washed using clean water, with the addition of car shampoo if necessary. When using special washing equipment such as high pressure jets or steam cleaning, clean the sensors very quickly keeping the jet more than 4 inches (10 cm) away. Also, do not apply stickers to the sensors.

WARNING!

Drivers must be careful when backing up even when using the Parking Sensor system. Always check carefully behind your vehicle, and be sure to

(Continued)

WARNING! ***(Continued)***

check for pedestrians, animals, other vehicles, obstructions, or blind spots before backing up. You are responsible for the safety of your surroundings and must continue to pay attention while backing up. Failure to do so can result in serious injury or death.

CAUTION!

- **The Parking Sensor system is only a parking aid and it is unable to recognize every obstacle, including small obstacles. Parking curbs might be temporarily detected or not detected at all. Obstacles located above or below the sensors will not be detected when they are in close proximity.**
- **The vehicle must be driven slowly when using the Parking Sensor system in order to be able to stop in time when an obstacle is detected. It is recommended that the driver looks over his/her shoulder when using the Parking Sensor system.**

ADDING FUEL/SMART FUEL

NOTE:

- The "Smart Fuel" is a device placed on the top of the filler pipe; it opens and closes automatically when the fuel nozzle is inserted or extracted.
- Only the correct nozzle size diameter allows the flap door to open when the nozzle is inserted.

Refueling Procedure

1. Open the fuel filler door pulling towards outside.

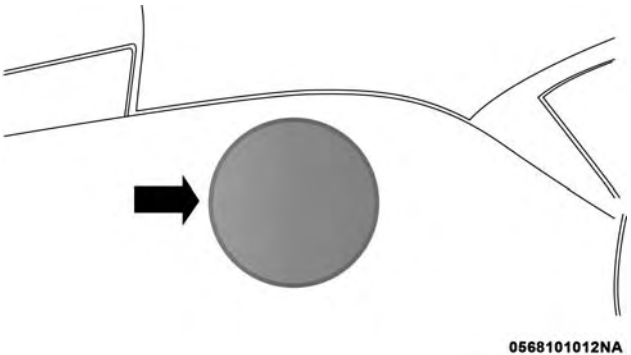

Fuel Filler Door Location

2. There is no fuel filler cap. A flap door inside the pipe seals the system.

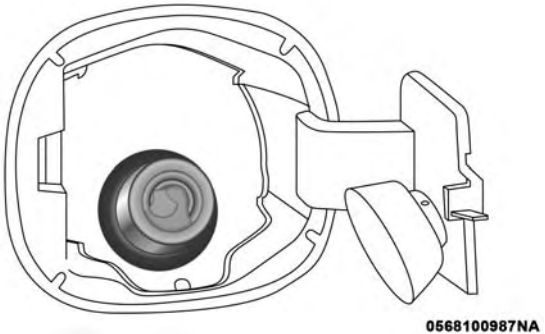

Fuel Nozzle Location

3. Insert the fuel nozzle into the filler pipe (the nozzle opens and holds the flap door while refueling) and start refueling. When the fuel nozzle "clicks" or shuts off, the fuel tank is full.
4. At the end of refueling, before removing the nozzle, wait at least 10 seconds to allow the fuel to flow within the tank.
5. Remove the fuel nozzle from the filler pipe and then close the fuel door.

Emergency Gas Can Refueling:

Most gas cans will not open the flapper door.

A funnel is provided to open the flapper door to allow emergency refueling with a gas can.

1. Retrieve the appropriate funnel from the storage area in the luggage compartment.
2. Insert funnel into same filler pipe opening as the fuel nozzle.

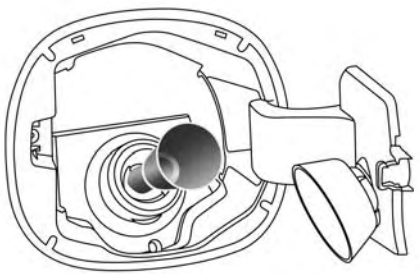

0568100988NA

Emergency Fuel Fill Location

3. Ensure funnel is inserted fully to hold flapper door open.
4. Pour fuel into funnel opening.
5. Remove funnel from filler pipe, clean off prior to putting back in the storage area.

CAUTION!

To avoid fuel spillage and overfilling, do not "top off" the fuel tank after filling.

WARNING!

- **Never have any smoking materials lit in or near the vehicle when the fuel door is open or the tank is being filled.**
- **Never add fuel when the engine is running. This is in violation of most state and federal fire regulations and may cause the "Malfunction Indicator Light" to turn on.**
- **A fire may result if fuel is pumped into a portable container that is inside of a vehicle. You could be burned. Always place fuel containers on the ground while filling.**

TRAILER TOWING

Trailer towing with this vehicle is not recommended.

RECREATIONAL TOWING (BEHIND MOTORHOME, ETC.)

Towing This Vehicle Behind Another Vehicle

This vehicle may be recreationally towed (flat towed) at any legal highway speed, for any distance, if the transmission is in NEUTRAL. This vehicle may also be towed on a flatbed or vehicle trailer, provided all four wheels are **OFF** the ground.

CAUTION!

- **Do not dolly tow this vehicle. Use of a towing dolly can cause significant damage to your vehicle. Damage from improper towing is not covered under the New Vehicle Limited Warranty.**
- **Towing this vehicle in violation of the above requirements can cause severe transmission damage. Damage from improper towing is not covered.**

Towing Condition	Wheels OFF The Ground	Alfa Twin Clutch Transmission
Flat Tow	None	Transmission in NEUTRAL
Dolly Tow	Front	**NOT ALLOWED**
	Rear	**NOT ALLOWED**
On Trailer	**All**	OK

DRIVING TIPS

Driving On Slippery Surfaces

Information in this section will aid in safe controlled launches in adverse conditions.

Acceleration

Rapid acceleration on snow covered, wet, or other slippery surfaces may cause the driving wheels to pull erratically to the right or left. This phenomenon occurs when there is a difference in the surface traction under the rear (driving) wheels.

WARNING!

Rapid acceleration on slippery surfaces is dangerous. Unequal traction can cause sudden pulling of the rear wheels. You could lose control of the vehicle and possibly have a collision. Accelerate slowly and carefully whenever there is likely to be poor traction (ice, snow, wet, mud, loose sand, etc.).

Traction

When driving on wet or slushy roads, it is possible for a wedge of water to build up between the tire and road surface. This is known as hydroplaning and may cause partial or complete loss of vehicle control and stopping ability. To reduce this possibility, the following precautions should be observed:

- Slow down during rainstorms or when the roads are slushy.
- Slow down if the road has standing water or puddles.
- Replace tires when tread wear indicators first become visible.
- Keep tires properly inflated.
- Maintain sufficient distance between your vehicle and the vehicle in front of you to avoid a collision in a sudden stop.

Your vehicle may be equipped with a Limited Slip Differential (LSD) that reduces, but does not eliminate, the amount of wheel slip across a given axle for improved handling.

Driving Through Water

Driving through water more than a few inches/centimeters deep will require extra caution to ensure safety and prevent damage to your vehicle.

Flowing/Rising Water

WARNING!

Do not drive on or across a road or path where water is flowing and/or rising (as in storm run-off). Flowing water can wear away the road or path's surface and cause your vehicle to sink into deeper water. Furthermore, flowing and/or rising water can carry your vehicle away swiftly. Failure to follow this warning may result in injuries that are serious or fatal to you, your passengers, and others around you.

Shallow Standing Water

Although your vehicle is capable of driving through shallow standing water, consider the following Cautions and Warnings before doing so.

WARNING!

- **Driving through standing water limits your vehicle's traction capabilities. Do not exceed 5 mph (8 km/h) when driving through standing water.**
- **Driving through standing water limits your vehicle's braking capabilities, which increases stopping distances. Therefore, after driving through standing water, drive slowly and lightly press on the brake pedal several times to dry the brakes.**
- **Failure to follow these warnings may result in injuries that are serious or fatal to you, your passengers, and others around you.**

CAUTION!

- **Always check the depth of the standing water before driving through it. Never drive through standing water that is deeper than the bottom of the tire rims mounted on the vehicle.**
- **Determine the condition of the road or the path that is under water and if there are any obstacles in the way before driving through the standing water.**
- **Do not exceed 5 mph (8 km/h) when driving through standing water. This will minimize wave effects.**
- **Driving through standing water may cause damage to your vehicle's drivetrain components. Always inspect your vehicle's fluids (i.e., engine oil,**

(Continued)

CAUTION! ***(Continued)***

transmission, axle, etc.) for signs of contamination (i.e., fluid that is milky or foamy in appearance) after driving through standing water. Do not continue to operate the vehicle if any fluid appears contaminated, as this may result in further damage. Such damage is not covered by the New Vehicle Limited Warranty.

- **Getting water inside your vehicle's engine can cause it to lock up and stall out, and cause serious internal damage to the engine. Such damage is not covered by the New Vehicle Limited Warranty.**

IN CASE OF EMERGENCY

CONTENTS

- HAZARD WARNING FLASHER 160
- BULB REPLACEMENT 160
  - Replacement Bulbs 160
  - Replacing Exterior Bulbs 161
- FUSES 171
  - General Information. 171
  - Engine Compartment Fuses 172
  - Dashboard Fuse Box 174
- TIRE SERVICE KIT. 175
  - Tire Service Kit Storage Location. 175
  - Tire Service Kit Components And Operation . . .175
  - Tire Service Kit Usage Precautions. 180
- JUMP STARTING 180
  - Preparations For Jump Start 181
  - Jump Starting Procedure 181
- IF YOUR ENGINE OVERHEATS 183
- TOWING A DISABLED VEHICLE 184
  - Front Tow Eye Usage 184
- FIRE EXTINGUISHER — IF EQUIPPED 187
- ENHANCED ACCIDENT RESPONSE SYSTEM (EARS) 187
- EVENT DATA RECORDER (EDR) 188

HAZARD WARNING FLASHER

The Hazard Warning flasher switch is located on the center console.

Push the switch to turn on the Hazard Warning flasher. When the switch is activated, all directional turn signals will flash on and off to warn oncoming traffic of an emergency. Push the switch a second time to turn off the Hazard Warning flasher.

This is an emergency warning system and it should not be used when the vehicle is in motion. Use it when your vehicle is disabled and it is creating a safety hazard for other motorists.

When you must leave the vehicle to seek assistance, the Hazard Warning flasher will continue to operate even though the ignition is placed in the OFF position.

NOTE: With extended use the Hazard Warning flasher may wear down your battery.

BULB REPLACEMENT

Replacement Bulbs

Interior Bulbs

	Bulb Number
Overhead Lamp	C10W
Luggage Compartment	W5W

Exterior Bulbs

	Bulb Number
Parking Lights/Daytime Running Lights (DRL)	LED (See Authorized Dealer)
Rear Tail Lights	LED (See Authorized Dealer)
Font and Rear Side Lights	W3W
Dipped/Main Beam Headlights (Versions With Bi-Halogen Headlights) — If Equipped	HIR2

	Bulb Number
Dipped/Main Beam Headlights (Versions With Bi-Xenon Head-lights) — If Equipped	D5S (See Authorized Dealer)
Dipped/Main Beam Headlights (Versions With Bi-Led Headlights) — If Equipped	LED (See Authorized Dealer)
Front Direction Indica-tors	PY24W
Rear Direction Indicators	P21W
Side Direction Indicators	WY5W
Brake Lights	LED (See Authorized Dealer)
Third Brake Light	LED (See Authorized Dealer)

	Bulb Number
License Plate Lamps	W5W
Reversing light	W16W
NOTE: Numbers refer to commercial bulb types that can be purchased from your authorized dealer.	
If a bulb needs to be replaced, visit your authorized dealer or refer to the applicable Service Manual.	

Replacing Exterior Bulbs

NOTE: Lens fogging can occur under certain atmospheric conditions. This will usually clear as atmospheric conditions change to allow the condensation to change back into a vapor. Turning the lamps on will usually accelerate the clearing process.

Front Light Clusters

The front head lamp contains bulbs for the parking lights/daytime running lights (DRL), low beam headlights, high beam headlights and direction indicators.

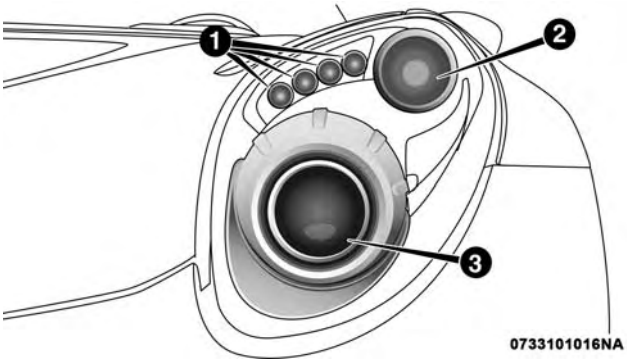

1 — Daytime Running Lights
2 — Direction Indicator
3 — High/Low Beam Lights

If bulb replacement is required, please see an authorized dealer.

Side Lights/Daytime Running Lights (DRL)

These are LEDs. For the replacement, contact the your authorized dealer.

Low/High Beam Bi-Halogen Headlights

To change the bulb, proceed as follows:

1. Turn the steering wheel completely.
2. Open the protective flap by rotating the screw.

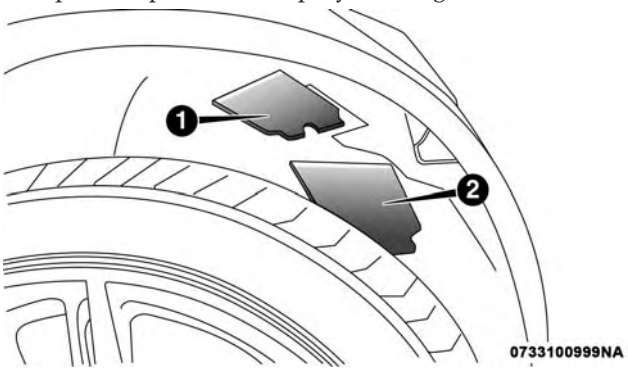

1 — Direction Indicator Bulb Protective Flap
2 — Headlamp Bulb Protective Flap

3. Remove protective cover from headlamp assembly.

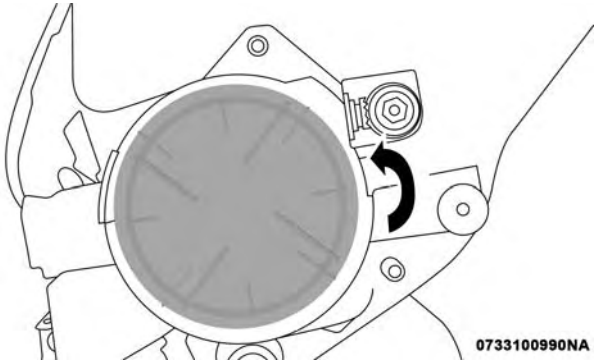

Protective Cover

4. Remove the electric connector (1) and then rotate the bulb holder (2) clockwise and remove it.

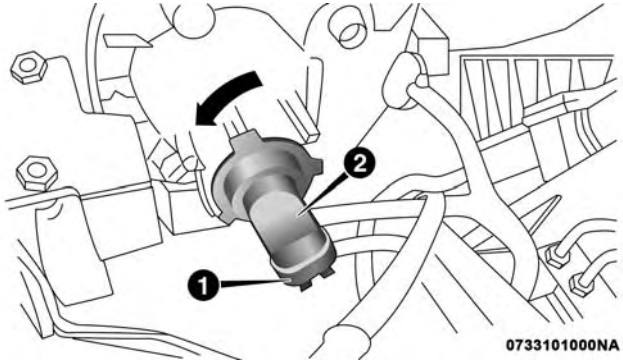

1 — Electrical Connector
2 — Bulb Holder

5. Extract the bulb and replace it.
6. Refit the new bulb, making sure that it is locked correctly, and reconnect the electrical connector.
7. Reinstall protective cover in the headlamp assembly and close the protective flap.

Low/High Beam HID & LED Headlights

For the replacement, contact the your authorized dealer.

Direction Indicators

Front:

1. Turn the steering wheel completely.
2. Open the protective flap by rotating the screw.

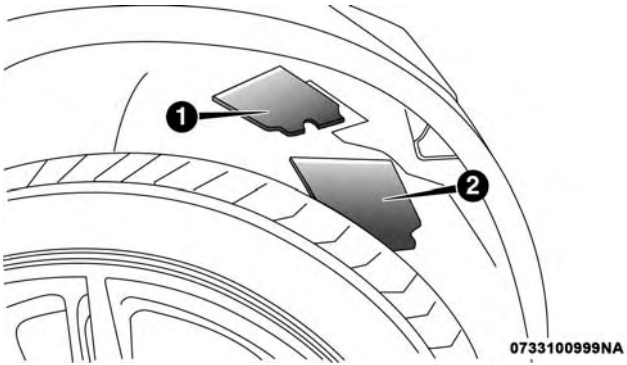

1 — Direction Indicator Bulb Protective Flap
2 — Headlamp Bulb Protective Flap

3. Remove protective cover from headlamp assembly.

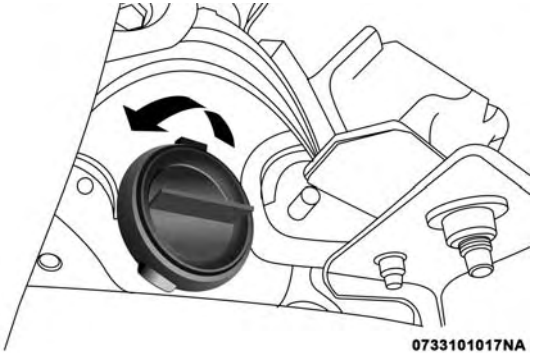

Protective Cover

4. Rotate the bulb holder counterclockwise and remove it.
5. Rotate the bulb assembly counter clockwise to remove from bulb holder.
6. Install the new bulb, making sure that it is locked in correctly, and reinstall into headlamp assembly.
7. Reinstall protective cover in the headlamp assembly and close the protective flap.

Side:

1. Compress the retaining clip, then pull the side marker assembly outwards.

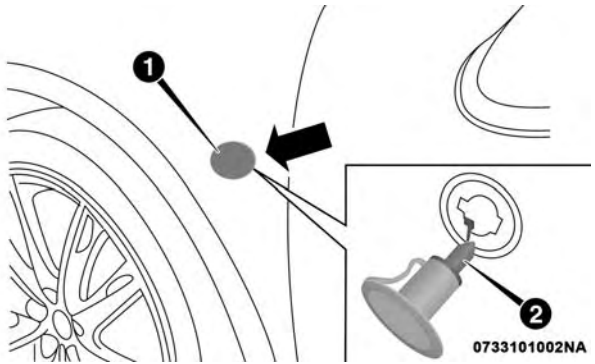

1 — Lens
2 — Bulb Holder

2. Turn the bulb holder counterclockwise, remove the bulb and replace it.
3. Install the bulb holder in the lens and turn it clockwise.
4. Install the cluster making sure that the internal clip clicks into position.

Front Side Marker

To change the bulb, proceed as follows:

1. Turn the front wheels to gain access and then remove the fastener from the inner wheel liner.
2. Fold back wheel liner door to access bulb housing.

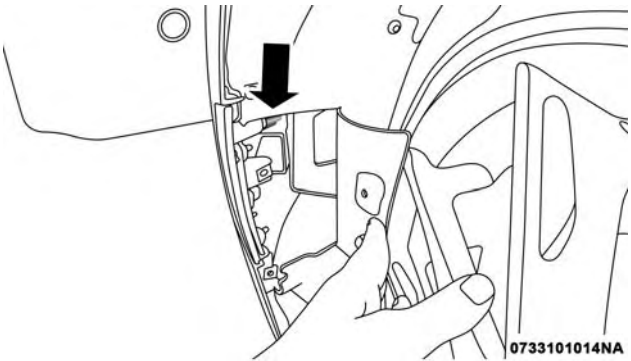

Bulb Housing Location

3. Remove bulb from bulb housing then remove and replace bulb and reinstall.

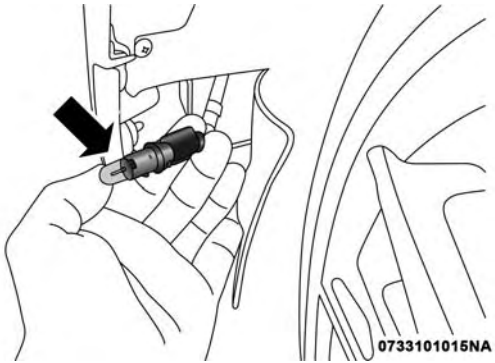

Front Side Marker Bulb

Rear Light Clusters

These contain the bulbs for the side lights, direction indicators and brake lights.

Direction Indicators

To change the bulb, proceed as follows:

1. Remove the protective cap (one for each side) on the side cover of the luggage compartment.

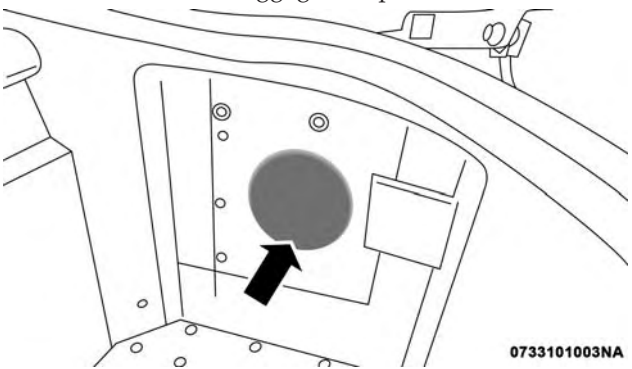

First Protective Cap

2. Remove the second protective cap insert a hand inside the opening.

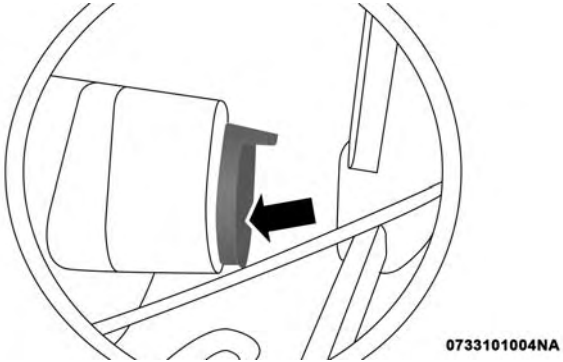

Second Protective Cap

3. Rotate clockwise to remove the bulb holder remove the bulb from the bulb holder.
4. Install the bulb by pressing it into bulb holder then turn install the bulb holder and turn it counterclockwise.
5. Install the previously removed protective caps.

Tail Lights/Brake Lights

These are LEDs. For the replacement, contact the your local dealer.

Reversing Light

WARNING!

The reverse lights are located close to the exhaust pipes; take the utmost care not to get burnt during the bulb replacement.

To replace the reversing lights, turn the bulb holder counterclockwise, remove the bulb and replace it.

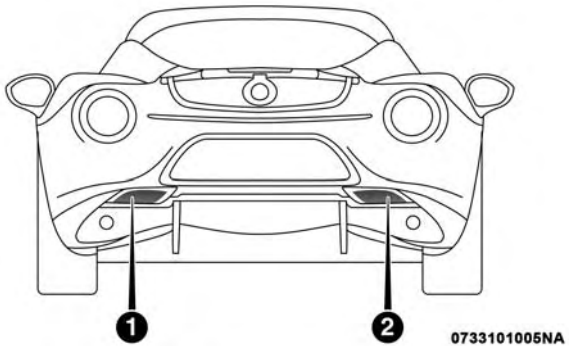

1 — Reverse Light Location
2 — Reverse Light Location

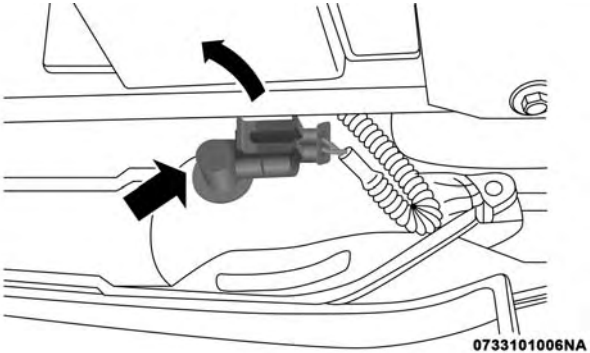

Reversing Light Bulb Holder

Third Brake Lights

These are LEDs. For the replacement, contact your local dealer.

License Plate Lights

To replace the bulbs proceed as follows:

1. Compress the retaining clip, then pull the license plate light cluster out.

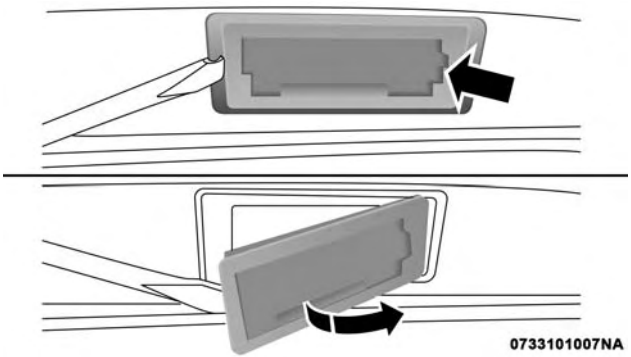

License Plate Lamp Removal

2. Turn bulb holder counterclockwise, remove bulb and replace it.

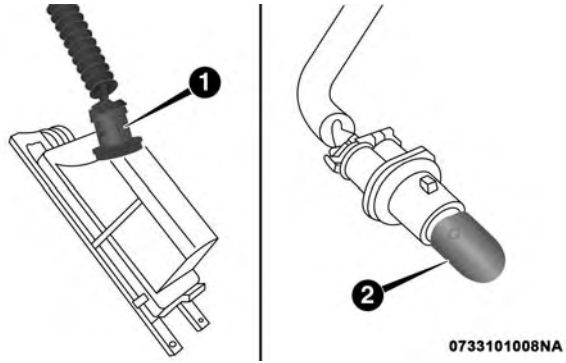

1 — Bulb Holder
2 — Bulb

Roof Light

To change the bulb, proceed as follows:

1. Remove roof light working at the points indicated by the arrows.

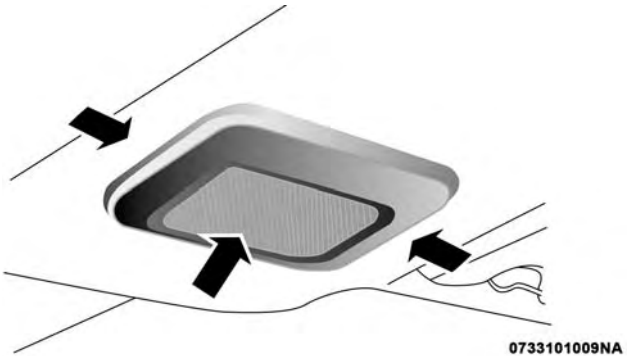

Roof Light

2. Open protective flap (2) and replace bulb (1), releasing it from the side contacts. Make sure that the new bulb is correctly secured between the contacts.

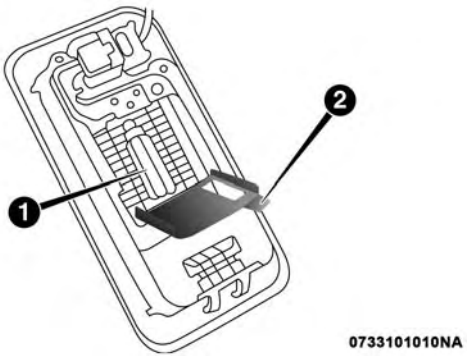

1 — Bulb
2 — Protective Flap

3. Close protective flap (2) and install roof light in its housing, making sure that it is locked in place.

Luggage Compartment Roof Light

To replace the bulb, proceed as follows:

1. Open the luggage compartment and remove luggage compartment roof light, working in the direction shown by the arrow.

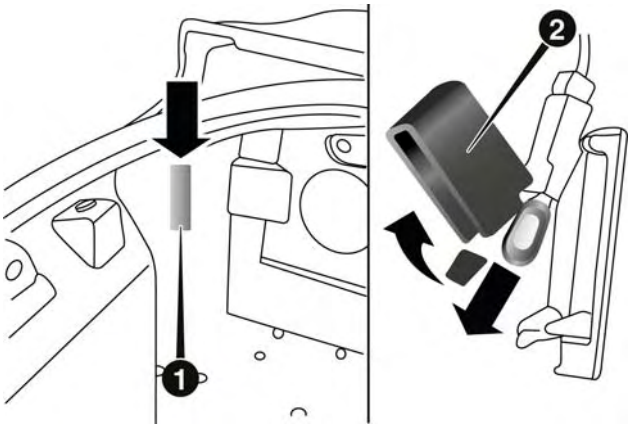

1 — Light Cover
2 — Light Protector

2. Open light protector (2) and replace the bulb.
3. Close protector on the lens.

4. Install luggage compartment roof light by inserting it in its correct position, first on one side and then pressing on the other side until it clicks into place.

FUSES

WARNING!

- **When replacing a blown fuse, always use an appropriate replacement fuse with the same amp rating as the original fuse. Never replace a fuse with another fuse of higher amp rating. Never replace a blown fuse with metal wires or any other material. Do not place a fuse inside a circuit breaker cavity or vice versa. Failure to use proper fuses may result in serious personal injury, fire and/or property damage.**
- **Before replacing a fuse, make sure that the ignition is off and that all the other services are switched off and/or disengaged.**
- **If the replaced fuse blows again, contact an authorized dealer.**
- **If a general protection fuse for safety systems (air bag system, braking system), power unit systems (engine system, transmission system) or steering system blows, contact an authorized dealer.**

General Information

The fuses protect electrical systems against excessive current.

When a device does not work, you must check the fuse element inside the blade fuse for a break/melt.

Also, please be aware that when using power outlets for extended periods of time with the engine off may result in vehicle battery discharge.

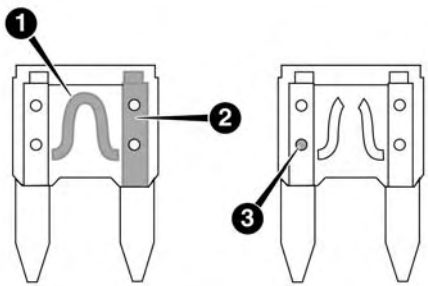

0704085531US

Blade Fuses

1 — Fuse Element
2 — Blade Fuse with a good/functional fuse element.
3 — Blade fuse with a NOT functional / BAD fuse element (blown fuse).

Engine Compartment Fuses

The engine compartment fuse box is located on the left side of the engine compartment, next to the battery. To access the fuses, remove screws, and then remove the cover.

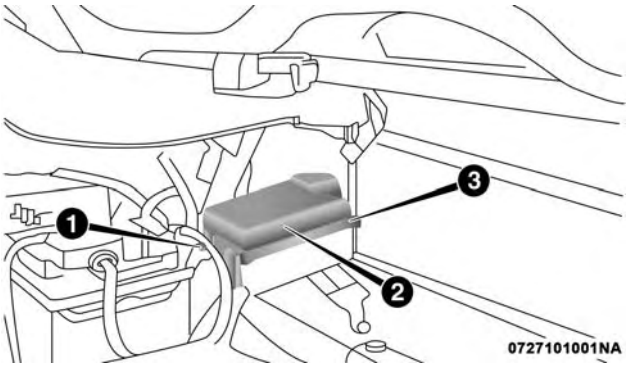

Engine Compartment Fuse Box

1 — Forward Screw
2 — Fuse Box Cover
3 — Rearward Screw

The ID number of the electrical component corresponding to each fuse can be found on the back of the cover.

Cavity	Maxi Fuse	Mini Fuse	Description
F01	70 Amp Tan	–	Body Controller
F03	20 Amp Yellow	–	Ignition Switch

Cavity	Maxi Fuse	Mini Fuse	Description
F04	40 Amp Orange	–	Anti-Lock Brake Pump
F05	20 Amp Yellow	–	Anti-Lock Brake Valve
F06	40 Amp Orange	–	Radiator Fan - Low Speed
F07	50 Amp Red	–	Radiator Fan - High Speed
F08	20 Amp Yellow	–	Blower Motor
F09	–	5 Amp Tan	Headlight Beam Switch – If Equipped
F10	–	10 Amp Red	Horn
F11	–	20 Amp Yellow	Powertrain
F14	–	15 Amp Blue	Alfa Twin Clutch Transmission
F15	–	15 Amp Blue	Alfa Twin Clutch Transmission
F16	–	5 Amp Tan	Alfa Twin Clutch Transmission, ECM
F17	–	10 Amp Red	Powertrain
F18	–	5 Amp Tan	Powertrain
F19	–	7.5 Amp Brown	Air Conditioning Compressor
F21	–	20 Amp Yellow	Fuel Pump
F22	–	20 Amp Yellow	Engine Control Unit Power Supply
F23	–	25 Amp Clear	Alpine Amplifier – If Equipped
F24	–	5 Amp Tan	Anti-Lock Brake System (ABS)
F30	–	10 Amp Red	Water Pump, HVAC
F82	30 Amp Green	–	Headlamp Washer – If Equipped

Cavity	Maxi Fuse	Mini Fuse	Description
F83	40 Amp Orange	–	Alfa Twin Clutch Transmission Pump
F84	–	5 Amp Tan	After Run Pump
F86	–	15 Amp Blue	Rear Power Outlet 12V
F88	–	7.5 Amp Brown	Heated Mirrors

Dashboard Fuse Box

The dashboard fuse box is part of the Body Control Module (BCM) and is located on the passenger side under the forward passenger floor. Remove the six screws and the forward floor pan to access the BCM.

Cavity	Vehicle Fuse Number	Mini Fuse	Description
3	F53	7.5 Amp Brown	Instrument Panel Node
4	F38	15 Amp Blue	Central Door Locking
5	F36	10 Amp Red	Diagnostic Socket, Vehicle Radio, TPMS, Alarm
6	F43	20 Amp Yellow	Bi-Directional Washer
7	F48	20 Amp Yellow	Passenger Power Window
9	F50	7.5 Amp Brown	Airbag
10	F51	7.5 Amp Brown	Headlamp Washer Relay, A/C Compressor Relay, High Beam Relay, Parking ECU, Vehicle Radio, Stop Lamp Switch
11	F37	7.5 Amp Brown	Stop Light Switch, Instrument Panel Node

Cavity	Vehicle Fuse Number	Mini Fuse	Description
12	F49	5 Amp Tan	Transmission Shifter Module, Cigar Lighter Light, Drive Style Unit, Heated Mirrors Relay
13	F31	5 Amp Tan	Climate Control, Body Controller
14	F47	20 Amp Yellow	Driver Power Window

TIRE SERVICE KIT

Small punctures up to 1/4 inch (6 mm) in the tire tread can be sealed with the Tire Service Kit. Foreign objects (e.g., screws or nails) should not be removed from the tire. Tire Service Kit can be used in outside temperatures approximately from -40°F (-40°C) to 122°F (50°C). This kit will provide a temporary tire seal, allowing you to drive your vehicle up to a maximum speed of 50 mph (80 km/h).

Tire Service Kit Storage Location

The Tire Service Kit is located in the rear storage area under the decklid.

Tire Service Kit Components And Operation

WARNING!

- **Do not attempt to seal a tire on the side of the vehicle closest to traffic. Pull far enough off the road to avoid the danger of being hit when using the Tire Service Kit.**
- **Do not use Tire Service Kit or drive the vehicle under the following circumstances:**
  - **If the puncture in the tire tread is approximately 1/4 inch (6 mm) or larger.**
  - **If the tire has any sidewall damage.**
  - **If the tire has any damage from driving with extremely low tire pressure.**
  - **If the tire has any damage from driving on a flat tire.**

(Continued)

WARNING! ***(Continued)***

- **If the wheel has any damage.**
- **If you are unsure of the condition of the tire or the wheel.**

- **Keep Tire Service Kit away from open flames or heat source.**
- **A loose Tire Service Kit thrown forward in a collision or hard stop could endanger the occupants of the vehicle. Always stow the Tire Service Kit in the place provided. Failure to follow these warnings can result in injuries that are serious or fatal to you, your passengers, and others around you.**
- **Take care not to allow the contents of Tire Service Kit to come in contact with hair, eyes, or clothing. Tire Service Kit sealant is harmful if inhaled, swallowed, or absorbed through the skin. It causes skin, eye, and respiratory irritation. Flush immediately with plenty of water if there is any contact with eyes or skin. Change clothing as soon as possible, if there is any contact with clothing.**
- **Tire Service Kit Sealant solution contains latex. In case of an allergic reaction or rash, consult a physician immediately. Keep Tire Service Kit out**

(Continued)

WARNING! ***(Continued)***

of reach of children. If swallowed, rinse mouth immediately with plenty of water and drink plenty of water. Do not induce vomiting! Consult a physician immediately.

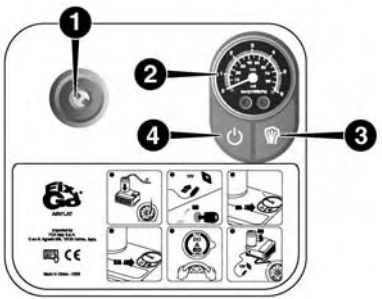

Tire Service Kit Components (Top View)

1 — Sealant Cartridge Receptacle
2 — Pressure Gauge
3 — Deflation Button
4 — Power Button

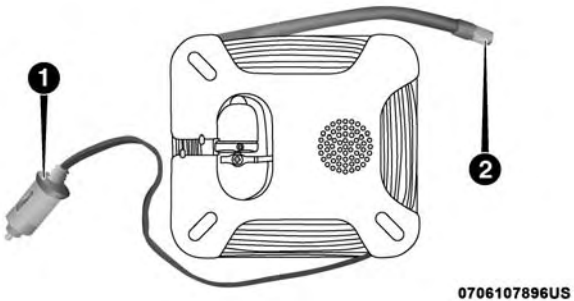

Tire Service Kit Components (Bottom View)

1 — Power Plug
2 — Air Pump Hose (Black)

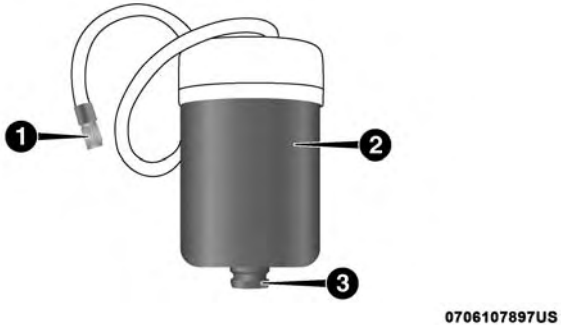

Sealant Cartridge Components

1 — Sealant Hose (Clear)
2 — Sealant Cartridge
3 — Sealant Cartridge Inlet

Whenever You Stop To Use Tire Service Kit

1. Pull over to a safe location and turn on the vehicle's Hazard Warning flashers.
2. Verify that the valve stem (on the wheel with the deflated tire) is in a position that is near to the ground. This will allow the Tire Service Kit Hoses and to reach the valve stem and keep the Tire Service Kit flat on the ground. This will provide the best positioning of the kit when injecting the sealant into the deflated tire and running the air pump. Move the vehicle as necessary to place the valve stem in this position before proceeding.
3. Place the transmission in PARK and place the ignition in the OFF position.
4. Apply the parking brake.
5. Remove speed limit sticker off of the sealant cartridge and place it inside the vehicle visually available for the driver to see.

Setting Up To Use The Tire Service Kit

1. Push in the sealant cartridge inlet into the sealant cartridge receptacle.
2. Uncoil the Sealant Hose.
3. Place the Tire Service Kit flat on the ground next to the deflated tire.
4. Remove the cap from the valve stem and then screw the fitting at the end of the Sealant Hose onto the valve stem.
5. Uncoil the Power Plug and insert the plug into the vehicle's 12 Volt power outlet.

NOTE: Do not remove foreign objects (e.g., screws or nails) from the tire.

Injecting Sealant Into The Tire

1. Always start the engine before turning on the Tire Service Kit.
2. After pushing the Power Button, the sealant (white fluid) will flow from the sealant cartridge through the sealant hose and into the tire. As the sealant flows through the sealant hose, the pressure gauge can read as high as 70 psi (4.8 Bar). The pressure gauge will decrease quickly from approximately 70 psi (4.8 Bar) to the actual tire pressure when the sealant cartridge is empty.

NOTE: Sealant may leak out through the puncture in the tire.

3. The pump will start to inject air into the tire immediately after the sealant cartridge is empty. Continue to operate the pump and inflate the tire to the pressure indicated on the tire pressure label on the driver-side latch pillar (recommended pressure). Check the tire pressure by looking at the pressure gauge.

NOTE:

- If the tire does not inflate to at least 26 psi (1.8 Bar) pressure within 15 minutes the tire is too badly damaged. Do not attempt to drive the vehicle further. Call for assistance.
- Do not let the compressor be turned on for more than 20 consecutive minutes. The pump may overheat.

4. Remove sealant cartridge by pushing the cartridge release button on the side of the compressor.

Drive Vehicle

Immediately after injecting sealant and inflating the tire, drive the vehicle 5 miles (8 km) or 10 minutes to ensure distribution of the Tire Service Kit Sealant within the tire. Do not exceed 50 mph (80 km/h).

WARNING!

Tire Service Kit is not a permanent flat tire repair. Have the tire inspected and repaired or replaced after using Tire Service Kit. Do not exceed 50 mph (80 km/h) until the tire is repaired or replaced. Failure to follow this warning can result in injuries that are serious or fatal to you, your passengers, and others around you.

After Driving

1. Attach the air pump hose (black) to the repaired tire.
2. Check the pressure in the tire by reading the pressure gauge. If the pressure is less than 19 psi (1.3 Bar), the tire is too badly damaged. Do not attempt to drive the vehicle further. Call for assistance.

NOTE: A replacement sealant cartridge is available at an authorized dealer.

Tire Service Kit Usage Precautions

- Replace the Tire Service Kit Sealant Cartridge and Sealant Hose prior to the expiration date (printed on the left hand side of the cartridge label) to assure optimum operation of the system.
- The Sealant Cartridge and Sealant Hose are a one tire application use and need to be replaced after each use. Always replace these components immediately at an authorized dealer.
- When the Tire Service Kit sealant is in a liquid form, clean water, and a damp cloth will remove the material from the vehicle or tire and wheel components. Once the sealant dries, it can easily be peeled off and properly discarded.
- For optimum performance, make sure the valve stem on the wheel is free of debris before connecting the Tire Service Kit.
- Do not lift or carry the Tire Service Kit by the hoses.

JUMP STARTING

If your vehicle has a discharged battery, it can be jump started using a set of jumper cables and a battery in another vehicle, or by using a portable battery booster pack. Jump starting can be dangerous if done improperly, so please follow the procedures in this section carefully.

WARNING!

Do not attempt jump starting if the battery is frozen. It could rupture or explode and cause personal injury.

CAUTION!

Do not use a portable battery booster pack or any other booster source with a system voltage greater than 12 Volts or damage to the battery, starter motor, alternator or electrical system may occur.

NOTE: When using a portable battery booster pack, follow the manufacturer's operating instructions and precautions.

Preparations For Jump Start

The battery in your vehicle is located on the left side of the engine compartment. To access the battery, remove the protective cover.

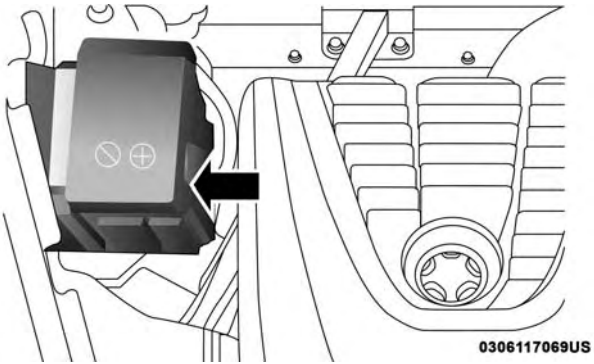

Battery Location

NOTE: Be sure that the disconnected ends of the cables do not touch while still connected to the other vehicle.

1. Firmly apply the parking brake, and turn the ignition OFF.
2. Turn off the heater, radio, and all unnecessary electrical accessories.
3. To remove the protective cover off the battery, pull upward on the cover.
4. If using another vehicle to jump start the battery, park the vehicle within the jumper cables reach, set the parking brake and make sure the ignition is OFF.

WARNING!

Do not allow vehicles to touch each other as this could establish a ground connection and personal injury could result.

Jump Starting Procedure

WARNING!

Failure to follow this jump starting procedure could result in personal injury or property damage due to battery explosion.

CAUTION!

Failure to follow these procedures could result in damage to the charging system of the booster vehicle or the discharged vehicle.

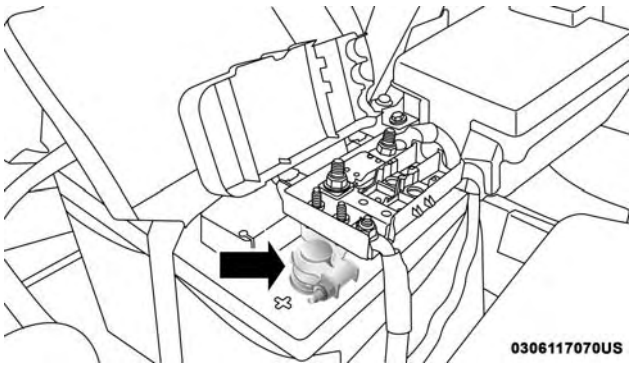

Positive (+) Battery Post

Connecting The Jumper Cables

1. Connect the positive **(+)** end of the jumper cable to the positive **(+)** post of the vehicle with the discharged battery.
2. Connect the opposite end of the positive **(+)** jumper cable to the positive **(+)** post of the booster battery.
3. Connect the negative end **(-)** of the jumper cable to the negative **(-)** post of the booster battery.
4. Connect the opposite end of the negative **(-)** jumper cable to a good engine ground of the vehicle with the discharged battery (exposed metal part of the engine) away from the battery and the fuel injection system.

WARNING!

Do not connect the jumper cable to the negative (-) post of the discharged battery. The resulting electrical spark could cause the battery to explode and could result in personal injury. Only use the specific ground point, do not use any other exposed metal parts.

5. Start the engine in the vehicle that has the booster battery, let the engine idle a few minutes, and then start the engine in the vehicle with the discharged battery.

6. Once the engine is started, remove the jumper cables in the reverse sequence:

Disconnecting The Jumper Cables

1. Disconnect the negative **(-)** jumper cable from the engine **(-)** ground of the vehicle with the discharged battery.
2. Disconnect the negative end **(-)** of the jumper cable from the negative **(-)** post of the booster battery.
3. Disconnect the opposite end of the positive **(+)** jumper cable from the positive **(+)** post of the booster battery.
4. Disconnect the positive **(+)** end of the jumper cable from the positive **(+)** post of the vehicle with the discharged battery.

If frequent jump starting is required to start your vehicle you should have the battery and charging system inspected at an authorized dealer.

CAUTION!

Accessories plugged into the vehicle power outlets draw power from the vehicle's battery, even when not in use (i.e., cellular devices, etc.). Eventually, if plugged in long enough without engine operation, the vehicle's battery will discharge sufficiently to degrade battery life and/or prevent the engine from starting.

IF YOUR ENGINE OVERHEATS

In any of the following situations, you can reduce the potential for overheating by taking the appropriate action.

- On highways — slow down.
- In city traffic — while stopped, place the transmission in NEUTRAL, but do not increase engine idle speed.

NOTE: There are steps that you can take to slow down an impending overheat condition:

- If your air conditioner (A/C) is on, turn it off. The A/C system adds heat to the engine cooling system and turning the A/C off can help remove this heat.
- You can also turn the temperature control to maximum heat, the mode control to floor and the blower control to high. This allows the heater core to act as a supplement to the radiator and aids in removing heat from the engine cooling system.

WARNING!

You or others can be badly burned by hot engine coolant (antifreeze) or steam from your radiator. If you see or hear steam coming from under the hood, do not open the hood until the radiator has had time to cool. Never try to open a cooling system pressure cap when the radiator or coolant bottle is hot.

CAUTION!

Driving with a hot cooling system could damage your vehicle. If the temperature gauge reads 240°F (116°C) or greater pull over and stop the vehicle. Idle the vehicle with the air conditioner turned off until the coolant temperature drops back into the normal range 200–230°F (93–110°C). The digital warning light may switch on (together with a message on the instrument cluster display) to indicate that the coolant temperature is too high; in this case, stop the engine and call for service.

TOWING A DISABLED VEHICLE

Front Tow Eye Usage

Your vehicle is equipped with a tow eye that can be used to tow a disabled vehicle.

The front tow eye receptacle is located on the lower right side of the front fascia.

To install the tow eye, thread the tow eye into the receptacle.

NOTE: The front tow eye is stored inside the Tire Service Kit storage bag.

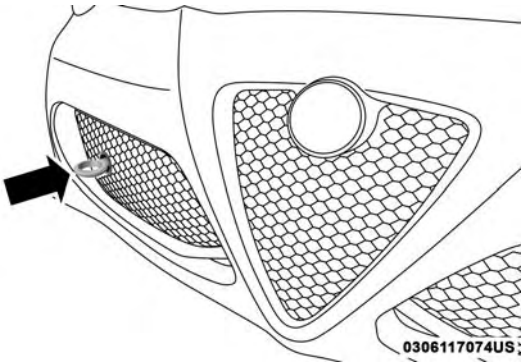

Front Tow Eye Installed

When using a tow eye, be sure to follow the "Tow Eye Usage Precautions" in this section.

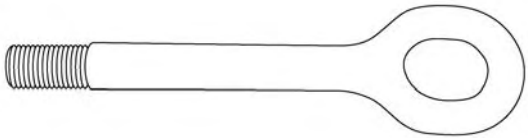

Tow Eye

Tow Eye Usage Precautions

The transmission must be in NEUTRAL when flat towing this vehicle. The ignition must be ON in order to place the transmission in NEUTRAL. Therefore, if the key is unavailable or the battery is discharged, this vehicle must be towed with all four wheels OFF the ground (using a vehicle trailer or flatbed truck).

- Ensure that the tow eye is properly seated and secure in the mounting receptacle.
- The tow eye is recommended for use with an approved tow bar and or rope.

- Do not use the tow eye to pull the vehicle onto a flatbed truck.
- Do not use the tow eye to free a stuck vehicle.

WARNING!

Stand clear of vehicles when pulling with tow eyes.
- **Do not use a chain with a tow eye. Chains may break, causing serious injury or death.**
- **Do not use a tow strap with a tow eye. Tow straps may break or become disengaged, causing serious injury or death.**
- **Failure to follow proper tow eye usage may cause components to break resulting in serious injury or death.**

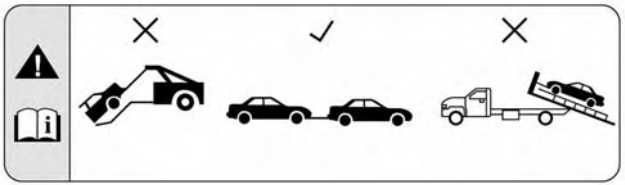

0614050352

Tow Eye Warning Label

CAUTION!

- **The tow eye must be used exclusively for roadside assistance operations. Only use the tow eye with an appropriate device in accordance with the highway code (a rigid bar or rope) to flat tow the vehicle for a short distance to the nearest service location.**
- **Tow eyes MUST NOT be used to tow vehicles off the road or where there are obstacles.**

(Continued)

CAUTION! *(Continued)*

- **In compliance with the above conditions, towing with a tow eye must take place with two vehicles (one towing, the other towed) aligned as much as possible along the same center line. Damage to your vehicle may occur if these guidelines are not followed.**
- **When towing, only use a facility that can tow vehicles with low ground clearances as extensive damage can result by using a standard tow truck platform.**

FIRE EXTINGUISHER — IF EQUIPPED

The fire extinguisher is located under the dashboard in front of the passenger side seat.

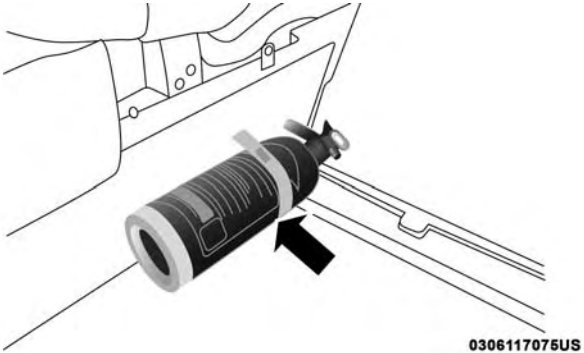

Fire Extinguisher

ENHANCED ACCIDENT RESPONSE SYSTEM (EARS)

This vehicle is equipped with an Enhanced Accident Response System.

Please refer to “Occupant Restraint Systems” in “Safety” for further information on the Enhanced Accident Response System (EARS) function.

EVENT DATA RECORDER (EDR)

This vehicle is equipped with an Event Data Recorder (EDR). The main purpose of an EDR is to record data that will assist in understanding how a vehicle's systems performed under certain crash or near crash-like situations, such as an air bag deployment or hitting a road obstacle.

Please refer to "Occupant Restraint Systems" in "Safety" for further information on the Event Data Recorder (EDR).

SERVICING AND MAINTENANCE

CONTENTS

■ SCHEDULED SERVICING 191
- □ Maintenance Plan 193

■ ENGINE COMPARTMENT 199
- □ 1750 Turbo Engine 199
- □ Checking Oil Level 200
- □ Adding Washer Solvent 200
- □ Maintenance-Free Battery 203

■ DEALER SERVICE 204
- □ Engine Oil 204
- □ Engine Oil Filter 205
- □ Engine Air Cleaner Filter 206
- □ Engine Cover 206
- □ Air Conditioner Maintenance 206
- □ Body Lubrication 207
- □ Wiper Blades 208
- □ Windshield Washer Nozzles 210
- □ Exhaust System 210
- □ Cooling System 212
- □ Brake System 217
- □ Alfa Twin Clutch Transmission 220

■ RAISING THE VEHICLE 221

■ TIRES 221
- □ Tire Safety Information 221
- □ Tires — General Information 230
- □ Tire Types 236
- □ Spare Tires — If Equipped 237
- □ Wheel And Wheel Trim Care 240
- □ Tire Chains (Traction Devices) 241

- Tire Rotation Recommendations 242

■ DEPARTMENT OF TRANSPORTATION UNIFORM TIRE QUALITY GRADES 242

- Treadwear. 243
- Traction Grades. 243
- Temperature Grades. 243

■ VEHICLE STORAGE 244

■ BODYWORK 244

- Protection From Atmospheric Agents 244
- Body And Underbody Maintenance. 245
- Preserving The Bodywork 245

■ INTERIORS 247

- Seats And Fabric Parts 247
- Plastic And Coated Parts 247
- Leather Parts. 248
- Glass Surfaces 249

SCHEDULED SERVICING

Your vehicle is equipped with an automatic oil change indicator system. The oil change indicator system will remind you that it is time to take your vehicle in for scheduled maintenance.

Based on engine operation conditions, the oil change indicator message will illuminate in the instrument cluster. This means that an engine oil and engine oil filter change is required for your vehicle. Operating conditions such as frequent short-trips, trailer tow, extremely hot or cold ambient temperatures will influence when the "Change Oil" or "Oil Change Required" message is displayed. Severe Operating Conditions can cause the change oil message to illuminate as early as 3,500 miles (5,600 km) since last reset. Have your vehicle serviced as soon as possible, within the next 500 miles (805 km).

The Wrench Warning Light may appear in the cluster as a service reminder when vehicle maintenance is required, according to the scheduled maintenance mileage. The maintenance schedule intervals are set by the manufacturer. Failure to have them carried out may void your New Vehicle Limited Warranty.

NOTE: The actual interval for changing the oil and replacing the engine oil filter depends on the vehicle usage conditions and is signalled by the warning light or message (if present) on the instrument panel or every 12 months.

Severe Duty All Models

In addition, if your vehicle is used under demanding conditions, including:

- On the track.
- On dusty roads.
- Short, repeated trips (less than 4-5 miles or 7-8 km) at sub-zero temperatures.
- Allowing the engine to idle for extended periods of time.
- Driving for long distances at low speeds.
- Allowing the vehicle to sit for long periods of inactivity.

Under any of the above circumstances, the following checks need to be performed more frequently than indicated in the Maintenance Plan:

- Check front and rear disc brake pad condition and wear.

- Check cleanliness of tailgate locks.
- Check cleanliness and lubrication of chassis and steering linkage.
- Visually inspect condition of: engine, gearbox, transmission, pipes and hoses (exhaust - fuel system - brakes) and rubber elements (gaiters - sleeves - bushes - etc.).
- Check battery charge and battery fluid level (electrolyte).
- Visually inspect condition of the auxiliary drive belts.
- Check and, if necessary, change engine oil and replace oil filter.
- Check and, if necessary, replace air cleaner filter.

Using the vehicle on a track should be regarded as an exception. The vehicle has been designed and manufactured for road use.

Change engine oil at 4,000 miles (6,500 km) if the vehicle is operated in a dusty and off road environment. This type of vehicle use is considered Severe Duty.

If the vehicle is operated in a dusty or dirty environment the engine air filter has to be changed every 6,500 miles (10,000 km).

Once A Month Or Before A Long Trip/Periodic Checks

Every 600 miles (1,000 km) or before long trips, check and, if necessary, top off the following:

- Check engine oil level.
- Check brake fluid level.
- Check windshield washer fluid level.
- Check the tire inflation pressures and look for unusual wear or damage.
- Check the fluid levels of the coolant reservoir and brake master cylinder reservoir, and add as needed
- Check function of all interior and exterior lights.

Every 2,000 miles (3,000 km) check and, if necessary, top up: engine oil level.

Maintenance Plan

Required Maintenance Intervals

Refer to the maintenance plan on the following page for the required maintenance intervals.

At Every Oil Change Interval As Indicated By Oil Change Indicator System:
Change oil and filter.
Inspect battery and clean and tighten terminals as required.

At Every Oil Change Interval As Indicated By Oil Change Indicator System:
Inspect brake pads, shoes, rotors, drums, and hoses.
Inspect engine cooling system protection and hoses.
Check and adjust hand brake.
Inspect exhaust system.
Inspect engine air cleaner filter if using in dusty or off-road conditions.

Mileage or time passed (whichever comes first)	12,000	24,000	36,000	48,000	60,000	72,000	84,000	96,000	108,000	120,000	132,000	144,000	156,000
Or Months:	12	24	36	48	60	72	84	96	108	120	132	144	156
Or Kilometers:	20,000	40,000	60,000	80,000	100,000	120,000	140,000	160,000	180,000	200,000	220,000	240,000	260,000
Check battery charge status and possibly recharge #	X	X	X	X	X	X	X	X	X	X	X	X	X
Check tire condition/wear and adjust pressure if required	X	X	X	X	X	X	X	X	X	X	X	X	X

Mileage or time passed (whichever comes first)	12,000	24,000	36,000	48,000	60,000	72,000	84,000	96,000	108,000	120,000	132,000	144,000	156,000
Or Months:	**12**	**24**	**36**	**48**	**60**	**72**	**84**	**96**	**108**	**120**	**132**	**144**	**156**
Or Kilometers:	20,000	40,000	60,000	80,000	100,000	120,000	140,000	160,000	180,000	200,000	220,000	240,000	260,000
Check lighting system operation (headlights, direction indicators, hazard lights, passenger compartment lights, boot lights, instrument panel warning lights, etc.)	X	X	X	X	X	X	X	X	X	X	X	X	X
Check vehicle fasteners	X		X		X		X		X		X		X
Check mechanical components fasteners	X	X	X	X	X	X	X	X	X	X	X	X	X
Check windshield/washer operation	X	X	X	X	X	X	X	X	X	X	X	X	X
Check position/wear of windshield blade	X	X	X	X	X	X	X	X	X	X	X	X	X
Check cleanliness of hood and deck lid locks, as well as cleanliness and lubrication of associated linkages	X	X	X	X	X	X	X	X	X	X	X	X	X

Mileage or time passed (whichever comes first)	**12,000**	**24,000**	**36,000**	**48,000**	**60,000**	**72,000**	**84,000**	**96,000**	**108,000**	**120,000**	**132,000**	**144,000**	**156,000**
Or Months:	**12**	**24**	**36**	**48**	**60**	**72**	**84**	**96**	**108**	**120**	**132**	**144**	**156**
Or Kilometers:	**20,000**	**40,000**	**60,000**	**80,000**	**100,000**	**120,000**	**140,000**	**160,000**	**180,000**	**200,000**	**220,000**	**240,000**	**260,000**
Visually inspect condition of: exterior bodywork, carbon monocoque, aerodynamic bottom, pipes and hoses (exhaust, fuel supply system, brakes), rubber elements (boots, driveshaft boots, sleeves, bushes, etc.)	X	X	X	X	X	X	X	X	X	X	X	X	X
Check condition and wear of front brake pads and discs, and operation of pad wear indicator	X	X	X	X	X	X	X	X	X	X	X	X	X
Check condition and wear of rear brake pads and discs, and operation of pad wear indicator	X	X	X	X	X	X	X	X	X	X	X	X	X

Mileage or time passed (whichever comes first)	12,000	24,000	36,000	48,000	60,000	72,000	84,000	96,000	108,000	120,000	132,000	144,000	156,000
Or Months:	**12**	**24**	**36**	**48**	**60**	**72**	**84**	**96**	**108**	**120**	**132**	**144**	**156**
Or Kilometers:	20,000	40,000	60,000	80,000	100,000	120,000	140,000	160,000	180,000	200,000	220,000	240,000	260,000
Check and top off, if required, fluid levels (engine coolant, brake/hydraulic clutch fluid, windscreen washer fluid, battery fluid, etc)	X	X	X	X	X	X	X	X	X	X	X	X	X
Visually inspect the condition of accessory drive belt(s)			X			X			X			X	
Check condition of timing belt			X					X					X
Check handbrake lever travel and adjust, if necessary (or every 12 months)	X	X	X	X	X	X	X	X	X	X	X	X	X
Check engine control system operation (via diagnostic tool)	X	X	X	X	X	X	X	X	X	X	X	X	X
Check and, if necessary, top off oil level of twin clutch transmission						X						X	

Mileage or time passed (whichever comes first)	12,000	24,000	36,000	48,000	60,000	72,000	84,000	96,000	108,000	120,000	132,000	144,000	156,000
Or Months:	**12**	**24**	**36**	**48**	**60**	**72**	**84**	**96**	**108**	**120**	**132**	**144**	**156**
Or Kilometers:	20,000	40,000	60,000	80,000	100,000	120,000	140,000	160,000	180,000	200,000	220,000	240,000	260,000
Replace accessory drive belt(s)					X					X			
Replace spark plugs *			X			X			X			X	
Replace toothed timing drive belt **					X					X			
Change engine oil and oil filter ***													
Change brake fluid every 24 months*****		X		X		X		X		X		X	
Replace air filter cartridge****	X	X	X	X	X	X	X	X	X	X	X	X	X

Recommend using Midtronics tester to check charge status and, if necessary, recharge battery.

* The spark plug change interval is mileage based only, yearly intervals do not apply. The following are essential to ensure correct operation and prevent serious damage to the engine:

- Only use spark plugs of the same make and type which are specially certified for such engines (refer to “Fluids And Lubricants” in “Technical Specifications” for further information).
- Strictly comply with the spark plug replacement interval given in the maintenance plan for spark plug replacement.

- Contact your Alfa Romeo Dealer if you have questions.

** Regardless of the distance covered, the timing belt must be changed every four years for particularly demanding use (cold climates, city driving, long periods of idling) or at least every five years.

*** The actual interval for changing the oil and replacing the engine oil filter depends on the vehicle usage conditions and is signalled by the warning light or message (if present) on the instrument panel or every 12 months.

**** If the vehicle is operated in a dusty or dirty environment the engine air filter has to be changed every 6,500 miles (10,000 km).

***** DOT 4 brake fluid must be changed every two years regardless of mileage.

WARNING!

- **You can be badly injured working on or around a motor vehicle. Do only service work for which you have the knowledge and the right equipment. If you have any doubt about your ability to perform a service job, take your vehicle to a competent mechanic.**
- **Failure to properly inspect and maintain your vehicle could result in a component malfunction and effect vehicle handling and performance. This could cause an accident.**

ENGINE COMPARTMENT

1750 Turbo Engine

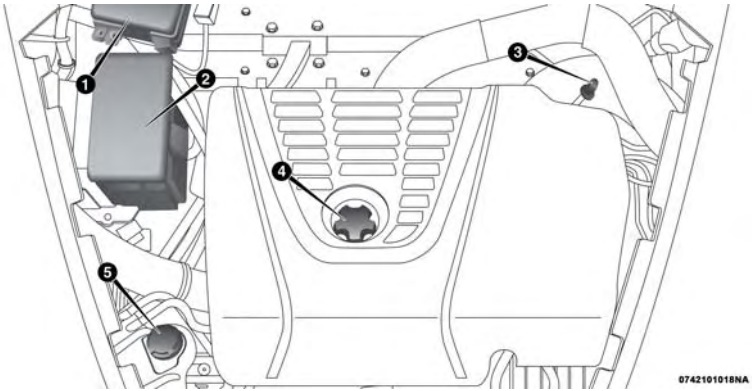

1 — Fuse Box
2 — Battery
3 — Engine Oil Dip Stick
4 — Engine Oil Fill
5 — Coolant Reservoir

Checking Oil Level

To assure proper engine lubrication, the engine oil must be maintained at the correct level. Check the oil level at regular intervals. The best time to check the engine oil level is before starting the engine after it has sat overnight.

Do not check oil level when the engine is warm. Checking engine oil level when the engine is warm will give you an incorrect reading.

Checking the oil while the vehicle is on level ground, and has sat overnight, will improve the accuracy of the oil level readings. Maintain the oil level between the range markings on the dipstick. The safe range is indicated by a crosshatch zone. Adding 1 quart of oil when the reading is at the low end of the indicated range will result in the oil level at the full end of the indicator range.

CAUTION!

Do not overfill the engine with oil. Overfilling the engine with oil will cause oil aeration, which can lead to loss of oil pressure and an increase in oil temperature. This loss of oil pressure and increased oil temperature could damage your engine.

Adding Washer Solvent

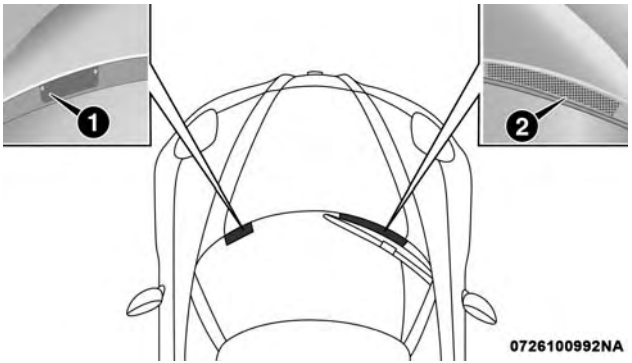

1 — Brake Fluid Access Panel
2 — Washer Solvent Access Panel

To check the windshield washer solvent level, proceed as follows:

1. To avoid any interference during the procedure, lift the windshield wiper blade.
2. Loosen the four screws using the supplied screwdriver. Remove the washer solvent protection panel.

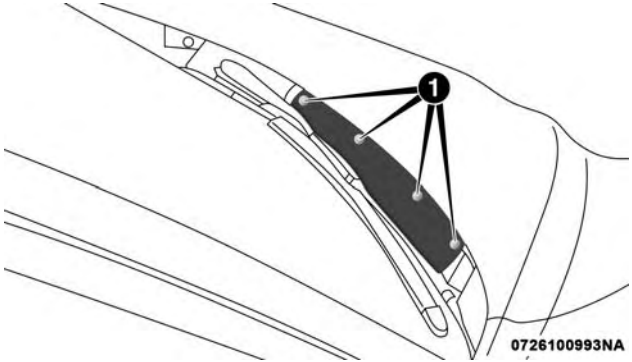

1 — Screw Locations

3. Release the plug from the opening.
4. Leaving the plug close to the opening, put a finger on the central hole in the plug and remove it: the level can be seen on the control pipe due to capillarity.

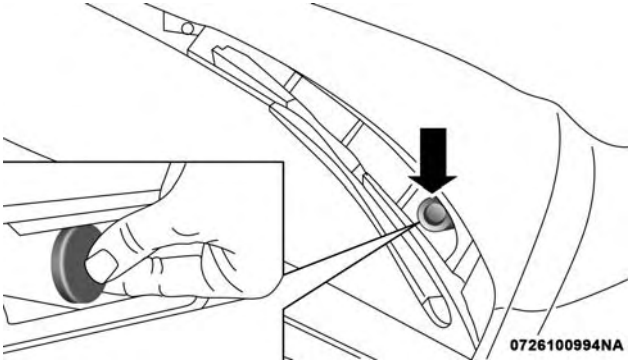

Washer Solvent Plug

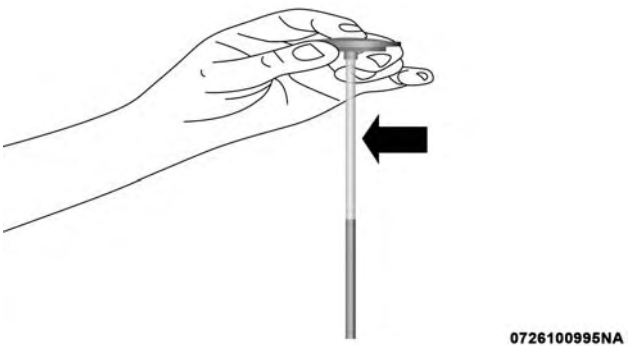

Washer Solvent Dip Stick

5. After the check, reinsert the plug with the control pipe in the initial position.
6. Reposition the washer solvent protection panel and tighten the four self-tapping screws.

If the level is not sufficient, namely if there is no washer solvent inside the pipe, proceed as follows:

1. To avoid any interference during the procedure, lift the windshield wiper blade.
2. Loosen the four screws using the supplied screwdriver. Remove the washer solvent protection panel.
3. Take the black funnel for topping up the windshield washer solvent and its extension pipe from the service kit in the luggage compartment.
4. Take out the plug with the solvent control pipe through the washer solvent protection panel.
5. Introduce the funnel and its extension pipe in the reservoir neck and top up.

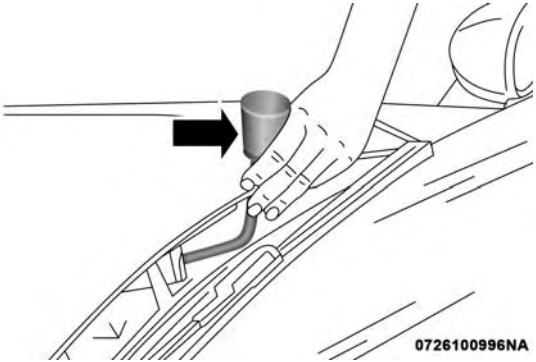

Washer Solvent Fill Funnel

6. After topping up, remove the funnel with the extension pipe.
7. Refit the plug with the dipstick.
8. Reposition the washer solvent protection panel and tighten the four self-tapping screws.

WARNING!

Commercially available windshield washer solvents are flammable. They could ignite and burn you. Care must be exercised when filling or working around the washer solution.

Maintenance-Free Battery

Your vehicle is equipped with a maintenance-free battery. You will never have to add water, nor is periodic maintenance required.

WARNING!

- **Battery fluid is a corrosive acid solution and can burn or even blind you. Do not allow battery fluid to contact your eyes, skin, or clothing. Do not lean over a battery when attaching clamps. If acid splashes in eyes or on skin, flush the area immediately with large amounts of water. Refer to "Jump-Starting Procedure" in "In Case Of Emergency" for further information.**
- **Battery gas is flammable and explosive. Keep flame or sparks away from the battery. Do not use a booster battery or any other booster source with an output greater than 12 Volts. Do not allow cable clamps to touch each other.**
- **Battery posts, terminals, and related accessories contain lead and lead compounds. Wash hands after handling.**

(Continued)

WARNING! ***(Continued)***

- **The battery in this vehicle has a vent hose that should not be disconnected and should only be replaced with a battery of the same type (vented).**

CAUTION!

- **It is essential when replacing the cables on the battery that the positive cable is attached to the positive post and the negative cable is attached to the negative post. Battery posts are marked positive (+) and negative (-) and are identified on the battery case. Cable clamps should be tight on the terminal posts and free of corrosion.**
- **If a "fast charger" is used while the battery is in the vehicle, disconnect both vehicle battery cables before connecting the charger to the battery. Do not use a "fast charger" to provide starting voltage.**

DEALER SERVICE

The pages that follow contain the **required** maintenance services determined by the engineers who designed your vehicle.

Besides those maintenance items specified in the fixed maintenance schedule, there are other components which may require servicing or replacement in the future.

CAUTION!

- **Failure to properly maintain your vehicle or perform repairs and service when necessary could result in more costly repairs, damage to other components or negatively impact vehicle performance. Immediately have potential malfunctions examined by an authorized dealer or qualified repair center.**
- **Your vehicle has been built with improved fluids that protect the performance and durability of**

(Continued)

CAUTION! *(Continued)*

your vehicle and also allow extended maintenance intervals. Do not use chemical flushes in these components as the chemicals can damage your engine, transmission, or air conditioning. Such damage is not covered by the New Vehicle Limited Warranty. If a flush is needed because of component malfunction, use only the specified fluid for the flushing procedure.

Engine Oil

Change Engine Oil

The oil change indicator system will remind you that it is time to take your vehicle in for scheduled maintenance. Refer to the "Maintenance Plan" for further information.

NOTE: The actual interval for changing the oil and replacing the engine oil filter depends on the vehicle usage conditions and is signalled by the warning light or message (if present) on the instrument panel or every 12 months.

Engine Oil Selection

For best performance and maximum protection for turbocharged engines under all types of operating conditions, the manufacturer recommends synthetic engine oils that are API Certified and meet the requirements of FCA Material Standard MS-12991.

Engine Oil Viscosity — 1750 Turbo Engine (SAE Grade)

SAE 5W-40 full synthetic engine oil is recommended for all operating temperatures. This engine oil improves low temperature starting and vehicle fuel economy.

Lubricants which do not have both the engine oil certification mark and the correct SAE viscosity grade number should not be used.

Materials Added To Engine Oil

The manufacturer strongly recommends against the addition of any additives (other than leak detection dyes) to the engine oil. Engine oil is an engineered product and its performance may be impaired by supplemental additives.

Disposing Of Used Engine Oil And Oil Filters

Care should be taken in disposing of used engine oil and oil filters from your vehicle. Used oil and oil filters, indiscriminately discarded, can present a problem to the environment. Contact your authorized dealer, service station or governmental agency for advice on how and where used oil and oil filters can be safely discarded in your area.

Engine Oil Filter

The engine oil filter should be replaced with a new filter at every engine oil change.

Engine Oil Filter Selection

This manufacturer's engines have a full-flow type disposable oil filter. Use a filter of this type for replacement. The quality of replacement filters varies considerably. Only high quality filters should be used to assure most efficient service. Mopar engine oil filters are high quality oil filters and are recommended.

Engine Air Cleaner Filter

Refer to the "Maintenance Plan" in this section for the proper maintenance intervals.

NOTE: Be sure to follow the "Severe Duty Conditions" maintenance interval if applicable.

WARNING!

The air induction system (air cleaner, hoses, etc.) can provide a measure of protection in the case of engine backfire. Do not remove the air induction system (air cleaner, hoses, etc.) unless such removal is necessary for repair or maintenance. Make sure that no one is near the engine compartment before starting the vehicle with the air induction system (air cleaner, hoses, etc.) removed. Failure to do so can result in serious personal injury.

Engine Air Cleaner Filter Selection

The quality of replacement engine air cleaner filters varies considerably. Only high quality filters should be used to assure most efficient service. Mopar engine air cleaner filters are a high quality filter and are recommended.

Engine Cover

To avoid possible damage to the engine cover, please disconnect each of the four mounting studs by pulling the engine cover upward, and then lift off the complete cover. Tilting the engine cover when one or more studs are still engaged will lead to premature failure of the couplers.

To reassemble the cover back onto the engine, first make sure it is properly aligned, the oil cap is centered, and that all four studs are lined up with their couplers. Then gently push on the four corners of the engine cover to snap the stud back into position.

No tools are required to remove or reassemble the engine cover.

Air Conditioner Maintenance

For best possible performance, your air conditioner should be checked and serviced by an authorized dealer at the start of each warm season. This service should include cleaning of the condenser fins and a performance test. Drive belt tension should also be checked at this time.

WARNING!

- **Use only refrigerants and compressor lubricants approved by the manufacturer for your air conditioning system. Some unapproved refrigerants are flammable and can explode, injuring you. Other unapproved refrigerants or lubricants can cause the system to fail, requiring costly repairs. Refer to Warranty Information Book, for further warranty information.**
- **The air conditioning system contains refrigerant under high pressure. To avoid risk of personal injury or damage to the system, adding refrigerant or any repair requiring lines to be disconnected should be done by an experienced technician.**

CAUTION!

Do not use chemical flushes in your air conditioning system as the chemicals can damage your air conditioning components. Such damage is not covered by the New Vehicle Limited Warranty.

Refrigerant Recovery And Recycling — R–1234yf

R–1234yf Air Conditioning Refrigerant is a hydrofluoroolefin (HFO) that is endorsed by the Environmental Protection Agency and is an ozone-friendly substance with a low global-warming potential. The manufacturer recommends that air conditioning service be performed by an authorized dealer using recovery and recycling equipment.

NOTE: Use only manufacturer approved A/C system PAG compressor oil, and refrigerants.

Body Lubrication

Locks and all body pivot points, including such items as seat tracks, door hinge pivot points and rollers, liftgate, tailgate, decklid, sliding doors and hood hinges, should be lubricated periodically with a lithium based grease, such as Mopar Spray White Lube to assure quiet, easy operation and to protect against rust and wear. Prior to the application of any lubricant, the parts concerned should be wiped clean to remove dust and grit; after lubricating excess oil and grease should be removed.

Particular attention should also be given to hood latching components to ensure proper function. When performing other underhood services, the hood latch, release mechanism and safety catch should be cleaned and lubricated.

The external lock cylinders should be lubricated twice a year, preferably in the Fall and Spring. Apply a small amount of a high quality lubricant, such as Mopar Lock Cylinder Lubricant directly into the lock cylinder.

Wiper Blades

Clean the rubber edges of the wiper blades, the windshield, and rear window periodically with a sponge or soft cloth and a mild nonabrasive cleaner. This will remove accumulations of salt, waxes, or road film, and help reduce streaking and smearing.

Operation of the wipers on dry glass for long periods may cause deterioration of the wiper blades. Always use washer fluid when using the wipers to remove salt or dirt from a dry windshield or rear window.

Avoid using the wiper blades to remove frost or ice from the windshield or rear window. Make sure that they are not frozen to the glass before turning them on to avoid damaging the blade. Keep the wiper blade out of contact with petroleum products such as engine oil, gasoline, etc.

NOTE: Life expectancy of wiper blades varies depending on geographical area and frequency of use. Poor performance of blades may be present with chattering, marks, water lines, or wet spots. If any of these conditions are present, clean the wiper blades or replace as necessary.

Blade Lifting

If it is necessary to lift the blade from the windshield (In the event of snow or blade replacement) Proceed as directed:

1. Rotate the end of the multifunction lever to the OFF position.
2. Turn the ignition to the MAR-ON position then to STOP.

0726100984NA

Windshield Wiper/Washer Lever

3. After turning the ignition to the STOP, within two minutes move the right stalk upward, into the unstable ("anti-panic") position, for at least half of a second. The windshield wiper then executes part of a stroke; at each command, approximately 1/3 of a normal wiper stroke is triggered.

NOTE: The previous operation can be repeated up to three times. In order to move the blades to the most suitable position.

4. Lift the blade from the windshield and proceed with the required operation.
5. Carefully lower the blade, bringing it back in contact with the windshield.
6. Bring the blade to the initial rest position, turning the ignition to MAR-ON.

NOTE: Do not operate the screen wiper with the blades lifted from the windshield.

Front Wiper Blade Removal/Installation

1. Lift the front wiper arm upward to raise the wiper blade off of the windshield.
2. Push the release button on the arm of the wiper blade.
3. Push the wiper blade up and remove it.

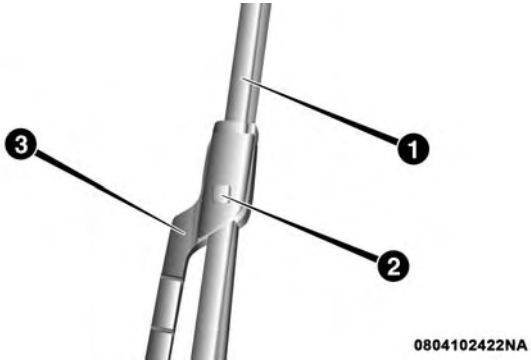

1 — Wiper Blade
2 — Release Button
3 — Wiper Arm

4. Install the wiper blade and firmly push the wiper blade until it snaps into place.

Windshield Washer Nozzles

The windshield washer nozzles are adjustable. They originally adjusted at the factory. Should it be necessary to adjust them again, contact your authorized Alfa Romeo Dealer.

If there is not a jet of fluid, first check that there is fluid in the washer reservoir. Refer to "Adding Washer Solvent" in this chapter for further information.

Then check that the nozzle holes are not clogged; use a suitable tool such as a needle to unblock them if necessary.

Exhaust System

The best protection against carbon monoxide entry into the vehicle body is a properly maintained engine exhaust system.

If you notice a change in the sound of the exhaust system; or if the exhaust fumes can be detected inside the vehicle; or when the underside or rear of the vehicle is damaged; have an authorized technician inspect the complete exhaust system and adjacent body areas for broken, damaged, deteriorated, or mispositioned parts. Open seams or loose connections could permit exhaust fumes to seep into the passenger compartment. In addition, have the exhaust system inspected each time the vehicle is raised for lubrication or oil change. Replace as required.

WARNING!

- **Exhaust gases can injure or kill. They contain carbon monoxide (CO), which is colorless and odorless. Breathing it can make you unconscious and can eventually poison you. To avoid breathing CO, refer to "Safety Tips" in "Safety" for further information.**
- **A hot exhaust system can start a fire if you park over materials that can burn. Such materials might be grass or leaves coming into contact with your exhaust system. Do not park or operate your vehicle in areas where your exhaust system can contact anything that can burn.**

CAUTION!

- **The catalytic converter requires the use of unleaded fuel only. Leaded gasoline will destroy the effectiveness of the catalyst as an emissions control device and may seriously reduce engine performance and cause serious damage to the engine.**
- **Damage to the catalytic converter can result if your vehicle is not kept in proper operating**

(Continued)

CAUTION! ***(Continued)***

condition. In the event of engine malfunction, particularly involving engine misfire or other apparent loss of performance, have your vehicle serviced promptly. Continued operation of your vehicle with a severe malfunction could cause the converter to overheat, resulting in possible damage to the converter and vehicle.

Under normal operating conditions, the catalytic converter will not require maintenance. However, it is important to keep the engine properly tuned to assure proper catalyst operation and prevent possible catalyst damage.

NOTE: Intentional tampering with emissions control systems can result in civil penalties being assessed against you.

In unusual situations involving grossly malfunctioning engine operation, a scorching odor may suggest severe and abnormal catalyst overheating. If this occurs, stop the vehicle, turn off the engine and allow it to cool. Service, including a tune-up to manufacturer's specifications, should be obtained immediately.

To minimize the possibility of catalytic converter damage:

- Do not shut off the engine or interrupt the ignition, when the transmission is in gear and the vehicle is in motion.
- Do not try to start the engine by pushing or towing the vehicle.
- Do not idle the engine with any spark plug wires disconnected or removed, such as when diagnostic testing, or for prolonged periods during very rough idle or malfunctioning operating conditions.

Cooling System

WARNING!

- **Turn vehicle off and disconnect the fan motor lead before working near the radiator cooling fan.**
- **You or others can be badly burned by hot engine coolant (antifreeze) or steam from your radiator. If you see or hear steam coming from under the hood, do not open the hood until the radiator has had time to cool. Never open a cooling system pressure cap when the radiator or coolant bottle is hot.**

(Continued)

WARNING! ***(Continued)***

- **Keep hands, tools, clothing, and jewelry away from the radiator cooling fan when the hood is raised. The fan starts automatically and may start at any time, whether the engine is running or not.**
- **When working near the radiator cooling fan, disconnect the fan motor lead or turn the ignition switch to the OFF position. The fan is temperature controlled and can start at any time the ignition switch is in the ON position.**

Coolant Checks

Check engine coolant (antifreeze) protection every 12 months (before the onset of freezing weather, where applicable). If the engine coolant (antifreeze) is dirty or rusty in appearance, the system should be drained, flushed and refilled with fresh engine coolant (antifreeze). Check the front of the A/C condenser for any accumulation of bugs, leaves, etc. If dirty, clean by gently spraying water from a garden hose vertically down the face of the condenser.

Cooling System — Drain, Flush And Refill

NOTE: Some vehicles require special tools to add coolant properly. Failure to fill these systems properly could lead to severe internal engine damage. If any coolant is needed to be added to the system please contact your local authorized dealer.

If the engine coolant (antifreeze) is dirty or contains visible sediment, have an authorized dealer clean and flush with OAT coolant (antifreeze) (conforming to MS.90032).

Refer to the "Maintenance Plan" in this section for the proper maintenance intervals.

Selection Of Coolant

Refer to "Fluids And Lubricants" in "Technical Specifications" for further information.

CAUTION!

- **Mixing of engine coolant (antifreeze) other than specified Organic Additive Technology (OAT) engine coolant (antifreeze), may result in engine damage and may decrease corrosion protection.**

(Continued)

CAUTION! *(Continued)*

Organic Additive Technology (OAT) engine coolant is different and should not be mixed with Hybrid Organic Additive Technology (HOAT) engine coolant (antifreeze) or any "globally compatible" coolant (antifreeze). If a non-OAT engine coolant (antifreeze) is introduced into the cooling system in an emergency, the cooling system will need to be drained, flushed, and refilled with fresh OAT coolant (conforming to MS.90032), by an authorized dealer as soon as possible.

- **Do not use water alone or alcohol-based engine coolant (antifreeze) products. Do not use additional rust inhibitors or antirust products, as they may not be compatible with the radiator engine coolant and may plug the radiator.**
- **This vehicle has not been designed for use with propylene glycol-based engine coolant (antifreeze). Use of propylene glycol-based engine coolant (antifreeze) is not recommended.**

Adding Coolant

Your vehicle has been built with an improved engine coolant (OAT coolant conforming to MS.90032) that allows extended maintenance intervals. This engine coolant (antifreeze) can be used up to ten years or 150,000 miles (240,000 km) before replacement. To prevent reducing this extended maintenance period, it is important that you use the same engine coolant (OAT coolant conforming to MS.90032) throughout the life of your vehicle.

Please review these recommendations for using Organic Additive Technology (OAT) engine coolant (antifreeze) that meets the requirements of FCA Material Standard MS.90032. When adding engine coolant (antifreeze):

- We recommend using Mopar Antifreeze/Coolant 10 Year/150,000 Mile (240,000 km) Formula OAT (Organic Additive Technology) that meets the requirements of FCA Material Standard MS.90032.
- Mix a minimum solution of 50% OAT engine coolant that meets the requirements of FCA Material Standard MS.90032 and distilled water. Use higher concentrations (not to exceed 70%) if temperatures below –34°F (–37°C) are anticipated. Please contact your authorized dealer for assistance.
- Use only high purity water such as distilled or deionized water when mixing the water/engine coolant (antifreeze) solution. The use of lower quality water will reduce the amount of corrosion protection in the engine cooling system.

NOTE:

- It is the owner's responsibility to maintain the proper level of protection against freezing according to the temperatures occurring in the area where the vehicle is operated.
- Some vehicles require special tools to add coolant properly. Failure to fill these systems properly could lead to severe internal engine damage. If any coolant is needed to be added to the system, please contact your local authorized dealer.
- Mixing engine coolant (antifreeze) types is not recommended and can result in cooling system damage. If HOAT and OAT coolant are mixed in an emergency, have a authorized dealer drain, flush, and refill with OAT coolant (conforming to MS.90032) as soon as possible.

Cooling System Pressure Cap

The cap must be fully tightened to prevent loss of engine coolant (antifreeze), and to ensure that engine coolant (antifreeze) will return to the radiator from the coolant expansion bottle/recovery tank if so equipped.

The cap should be inspected and cleaned if there is any accumulation of foreign material on the sealing surfaces.

WARNING!

- **Do not open hot engine cooling system. Never add engine coolant (antifreeze) when the engine is overheated. Do not loosen or remove the cap to cool an overheated engine. Heat causes pressure to build up in the cooling system. To prevent scalding or injury, do not remove the pressure cap while the system is hot or under pressure.**
- **Do not use a pressure cap other than the one specified for your vehicle. Personal injury or engine damage may result.**

Disposal Of Used Coolant

Used ethylene glycol-based coolant (antifreeze) is a regulated substance requiring proper disposal. Check with your local authorities to determine the disposal rules for your community. To prevent ingestion by animals or children, do not store ethylene glycol-based coolant in open containers or allow it to remain in puddles on the ground. If ingested by a child or pet, seek emergency assistance immediately. Clean up any ground spills immediately.

Coolant Level

The coolant expansion bottle provides a quick visual method for determining that the coolant level is adequate. With the engine off and cold, the level of the engine coolant (antifreeze) in the bottle should be between the “MIN” and “MAX” marks.

As long as the engine operating temperature is satisfactory, the coolant bottle need only be checked once a month.

When additional engine coolant (antifreeze) is needed to maintain the proper level, it should be added to the coolant bottle. Do not overfill.

Points To Remember

NOTE: When the vehicle is stopped after a few miles/kilometers of operation, you may observe vapor coming from the front of the engine compartment. This is normally a result of moisture from rain, snow, or high humidity accumulating on the radiator and being vaporized when the thermostat opens, allowing hot engine coolant (antifreeze) to enter the radiator.

If an examination of your engine compartment shows no evidence of radiator or hose leaks, the vehicle may be safely driven. The vapor will soon dissipate.

- Do not overfill the coolant expansion bottle.
- Check the coolant freeze point in the radiator and in the coolant expansion bottle. If engine coolant (antifreeze) needs to be added, the contents of the coolant expansion bottle must also be protected against freezing.
- If frequent engine coolant (antifreeze) additions are required, the cooling system should be pressure tested for leaks.
- Maintain engine coolant (antifreeze) concentration at a minimum of 50% OAT coolant (conforming to MS.90032) and distilled water for proper corrosion protection of your engine which contains aluminum components.
- Make sure that the coolant expansion bottle overflow hoses are not kinked or obstructed.
- Keep the front of the radiator clean. If your vehicle is equipped with air conditioning, keep the front of the condenser clean.
- Do not change the thermostat for Summer or Winter operation. If replacement is ever necessary, install ONLY the correct type thermostat. Other designs may result in unsatisfactory engine coolant (antifreeze) performance, poor gas mileage, and increased emissions.

Brake System

In order to assure brake system performance, all brake system components should be inspected periodically. Refer to the "Maintenance Plan" in this section for the proper maintenance intervals.

WARNING!

Riding the brakes can lead to brake failure and possibly a collision. Driving with your foot resting or riding on the brake pedal can result in abnormally high brake temperatures, excessive lining wear, and possible brake damage. You would not have your full braking capacity in an emergency.

Brake Master Cylinder

The fluid level in the master cylinder should be checked when performing under hood services, or immediately if the "Brake Warning Light" is on.

Be sure to clean the top of the master cylinder area before removing the cap. If necessary, add fluid to bring the fluid level up to the requirements described on the brake fluid reservoir. Fluid level can be expected to fall as the brake pads wear. The brake fluid level should be checked when the pads are replaced. However, low fluid level may be caused by a leak and a checkup may be needed.

Use only manufacturer's recommended brake fluid. Refer to "Fluids And Lubricants " in "Technical Specifications" for further information.

WARNING!

- **Use only manufacturer's recommended brake fluid. Refer to "Fluids And Lubricants" in "Technical Specifications" for further information. Using the wrong type of brake fluid can severely damage your brake system and/or impair its performance. The proper type of brake fluid for your vehicle is also identified on the original factory installed hydraulic master cylinder reservoir.**
- **To avoid contamination from foreign matter or moisture, use only new brake fluid or fluid that has been in a tightly closed container. Keep the master cylinder reservoir cap secured at all times. Brake fluid in a open container absorbs moisture from the air resulting in a lower boiling point. This may cause it to boil unexpectedly during**

(Continued)

WARNING! *(Continued)*

hard or prolonged braking, resulting in sudden brake failure. This could result in a collision.

- **Overfilling the brake fluid reservoir can result in spilling brake fluid on hot engine parts, causing the brake fluid to catch fire. Brake fluid can also damage painted and vinyl surfaces, care should be taken to avoid its contact with these surfaces.**
- **Do not allow petroleum based fluid to contaminate the brake fluid. Brake seal components could be damaged, causing partial or complete brake failure. This could result in a collision.**

CAUTION!

Use of improper brake fluids will affect overall clutch system performance. Improper brake fluids may damage the clutch system resulting in loss of clutch function and the ability to shift the transmission.

Checking Brake Fluid

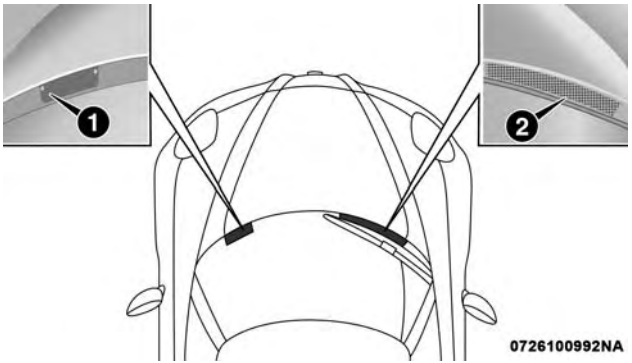

1 — Brake Fluid Protection Panel
2 — Washer Solvent Protection Panel

To check the brake fluid level, proceed as follows:

1. Loosen the two screws and remove the brake fluid protection panel.

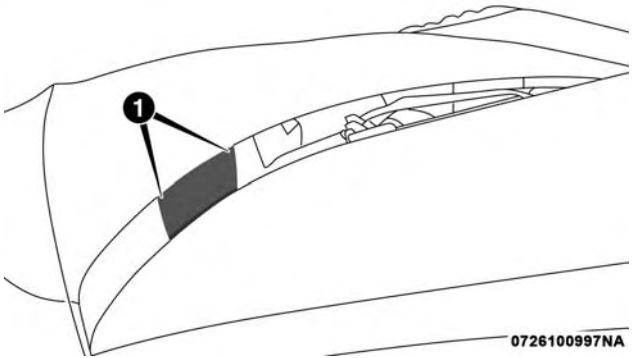

Brake Fluid Protection Panel

1 — Screw Locations

2. Check that the fluid is at the max. level.
3. After checking, reposition the brake fluid protection panel and tighten the two screws.

Adding Brake Fluid

If the fluid level in the reservoir is not sufficient, proceed as follows:

1. Take the black funnel for topping up the brake fluid and its extension pipe from the service kit in the luggage compartment.
2. Loosen the reservoir plug and introduce the funnel with the extension pipe in the reservoir inlet.

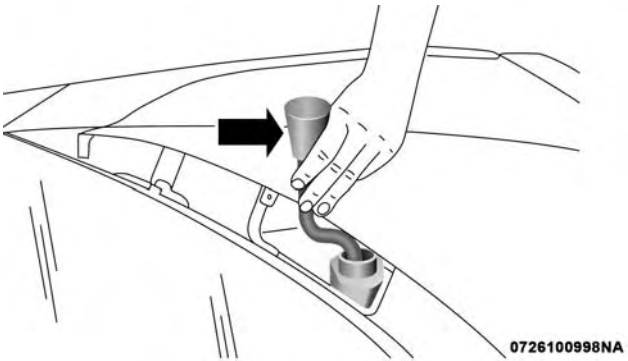

Brake Fluid Funnel

3. After topping up, remove the funnel with the extension pipe.
4. Tighten the reservoir plug.

5. Reposition the brake fluid protection panel and tighten the two screws.

NOTE: Be very careful while removing the plug from the opening to prevent the plug from falling inside the vehicle body.

Alfa Twin Clutch Transmission

Selection Of Lubricant

It is important to use the proper transmission fluid to ensure optimum transmission performance and life. Use only the manufacturer's specified transmission fluid. Refer to "Fluids And Lubricants" in "Technical Specifications" for fluid specifications. It is important to maintain the transmission fluid at the correct level using the recommended fluid. No chemical flushes should be used in any transmission; only the approved lubricant should be used.

CAUTION!

Using a transmission fluid other than the manufacturer's recommended fluid may cause deterioration in transmission shift quality. Refer to "Fluids And Lubricants" in "Technical Specifications" for fluid specifications.

Special Additives

The manufacturer strongly recommends against using any special additives in the transmission.

Transmission fluid is an engineered product and its performance may be impaired by supplemental additives. Therefore, do not add any fluid additives to the transmission. The only exception to this policy is the use of special dyes for diagnosing fluid leaks.

CAUTION!

Do not use chemical flushes in your transmission as the chemicals can damage your transmission components. Such damage is not covered by the New Vehicle Limited Warranty.

Fluid Level Check

The fluid level is preset at the factory and does not require adjustment under normal operating conditions. Frequent fluid level checks are not required, but have your authorized dealer check the fluid level as specified in the Maintenance Schedule to ensure proper transmission function and longevity. The transmission has no dipstick, but your authorized dealer can check your transmission fluid level using special service tools.

If you notice fluid leakage or transmission malfunction, visit your authorized dealer immediately to have the transmission fluid level checked. Operating the vehicle with an improper fluid level can cause severe transmission damage.

Fluid Changes

Under normal operating conditions, the fluid installed at the factory will provide satisfactory lubrication for the life of the vehicle. However, change the fluid if it becomes contaminated (with water, etc.), or if the transmission is disassembled for any reason.

RAISING THE VEHICLE

In the case where it is necessary to raise the vehicle, go to your authorized dealer or service station.

TIRES

Tire Safety Information

Tire safety information will cover aspects of the following information: Tire Markings, Tire Identification Numbers, Tire Terminology and Definitions, Tire Pressures, and Tire Loading.

Tire Markings

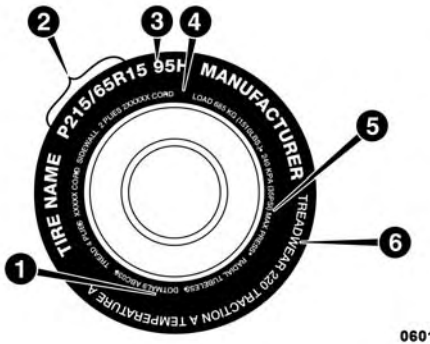

Tire Markings

1 — U.S. DOT Safety Standards Code (TIN)	4 — Maximum Load
2 — Size Designation	5 — Maximum Pressure
3 — Service Description	6 — Treadwear, Traction and Temperature Grades

NOTE:

- P (Passenger) — Metric tire sizing is based on U.S. design standards. P-Metric tires have the letter "P" molded into the sidewall preceding the size designation. Example: P215/65R15 95H.

- European — Metric tire sizing is based on European design standards. Tires designed to this standard have the tire size molded into the sidewall beginning with the section width. The letter ″P″ is absent from this tire size designation. Example: 215/65R15 96H.
- LT (Light Truck) — Metric tire sizing is based on U.S. design standards. The size designation for LT-Metric tires is the same as for P-Metric tires except for the letters “LT” that are molded into the sidewall preceding the size designation. Example: LT235/85R16.
- Temporary spare tires are designed for temporary emergency use only. Temporary high pressure compact spare tires have the letter “T” or “S” molded into the sidewall preceding the size designation. Example: T145/80D18 103M.
- High flotation tire sizing is based on U.S. design standards and it begins with the tire diameter molded into the sidewall. Example: 31x10.5 R15 LT.

Tire Sizing Chart

EXAMPLE:

Example Size Designation: P215/65R15XL 95H, 215/65R15 96H, LT235/85R16C, T145/80D18 103M, 31x10.5 R15 LT
P = Passenger car tire size based on U.S. design standards, or **″....blank....″** = Passenger car tire based on European design standards, or **LT** = Light truck tire based on U.S. design standards, or **T or S** = Temporary spare tire or **31** = Overall diameter in inches (in)
215, 235, 145 = Section width in millimeters (mm)
65, 85, 80 = Aspect ratio in percent (%) – Ratio of section height to section width of tire, or **10.5** = Section width in inches (in)

EXAMPLE:

R = Construction code
– "R" means radial construction, or
– "D" means diagonal or bias construction

15, 16, 18 = Rim diameter in inches (in)

Service Description:

95 = Load Index
– A numerical code associated with the maximum load a tire can carry

H = Speed Symbol
– A symbol indicating the range of speeds at which a tire can carry a load corresponding to its load index under certain operating conditions
– The maximum speed corresponding to the speed symbol should only be achieved under specified operating conditions (i.e., tire pressure, vehicle loading, road conditions, and posted speed limits)

Load Identification:
Absence of the following load identification symbols on the sidewall of the tire indicates a Standard Load (SL) tire:

- **XL** = Extra load (or reinforced) tire, or
- **LL** = Light load tire or
- **C, D, E, F, G** = Load range associated with the maximum load a tire can carry at a specified pressure

Maximum Load – Maximum load indicates the maximum load this tire is designed to carry

Maximum Pressure – Maximum pressure indicates the maximum permissible cold tire inflation pressure for this tire

Tire Identification Number (TIN)

The TIN may be found on one or both sides of the tire; however, the date code may only be on one side. Tires with white sidewalls will have the full TIN, including the date code, located on the white sidewall side of the tire. Look for the TIN on the outboard side of black sidewall tires as mounted on the vehicle. If the TIN is not found on the outboard side, then you will find it on the inboard side of the tire.

EXAMPLE:
DOT MA L9 ABCD 0301
DOT = Department of Transportation – This symbol certifies that the tire is in compliance with the U.S. Department of Transportation tire safety standards and is approved for highway use
MA = Code representing the tire manufacturing location (two digits)
L9 = Code representing the tire size (two digits)
ABCD = Code used by the tire manufacturer (one to four digits)
03 = Number representing the week in which the tire was manufactured (two digits) – 03 means the 3rd week
01 = Number representing the year in which the tire was manufactured (two digits) – 01 means the year 2001 – Prior to July 2000, tire manufacturers were only required to have one number to represent the year in which the tire was manufactured. Example: 031 could represent the 3rd week of 1981 or 1991

Tire Terminology And Definitions

Term	Definition
B-Pillar	The vehicle B-Pillar is the structural member of the body located behind the front door.
Cold Tire Inflation Pressure	Cold tire inflation pressure is defined as the tire pressure after the vehicle has not been driven for at least three hours, or driven less than 1 mile (1.6 km) after sitting for a minimum of three hours. Inflation pressure is measured in units of PSI (pounds per square inch) or kPa (kilopascals).
Maximum Inflation Pressure	The maximum inflation pressure is the maximum permissible cold tire inflation pressure for this tire. The maximum inflation pressure is molded into the sidewall.
Recommended Cold Tire Inflation Pressure	Vehicle manufacturer's recommended cold tire inflation pressure as shown on the tire placard.
Tire Placard	A label permanently attached to the vehicle describing the vehicle's loading capacity, the original equipment tire sizes and the recommended cold tire inflation pressures.

Tire Loading And Tire Pressure

NOTE: The proper cold tire inflation pressure is listed on the driver's side B-Pillar or the rear edge of the driver's side door.

Check the inflation pressure of each tire, including the spare tire (if equipped), at least monthly and inflate to the recommended pressure for your vehicle.

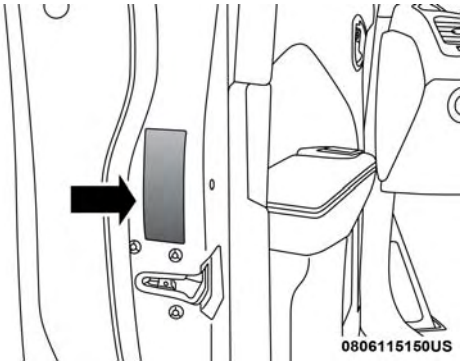

Example Tire Placard Location (Door)

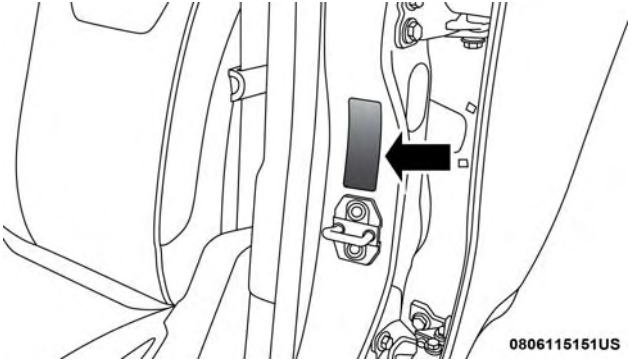

Example Tire Placard Location (B-Pillar)

Tire And Loading Information Placard

Tire And Loading Information Placard

This placard tells you important information about the:

1. Number of people that can be carried in the vehicle.
2. Total weight your vehicle can carry.
3. Tire size designed for your vehicle.
4. Cold tire inflation pressures for the front, rear, and spare tires.

Loading

The vehicle maximum load on the tire must not exceed the load carrying capacity of the tire on your vehicle. You will not exceed the tire's load carrying capacity if you adhere to the loading conditions, tire size, and cold tire inflation pressures specified on the Tire and Loading Information placard in "Vehicle Loading" in the "Starting And Operating" section of this manual.

NOTE: Under a maximum loaded vehicle condition, gross axle weight ratings (GAWRs) for the front and rear axles must not be exceeded.

For further information on GAWRs, vehicle loading, and trailer towing, refer to "Vehicle Loading" in the "Starting And Operating" section of this manual.

To determine the maximum loading conditions of your vehicle, locate the statement "The combined weight of occupants and cargo should never exceed XXX kg or XXX lbs" on the Tire and Loading Information placard. The combined weight of occupants, cargo/luggage and trailer tongue weight (if applicable) should never exceed the weight referenced here.

Steps For Determining Correct Load Limit—

(1) Locate the statement "The combined weight of occupants and cargo should never exceed XXX kg or XXX lbs." on your vehicle's placard.

(2) Determine the combined weight of the driver and passengers that will be riding in your vehicle.

(3) Subtract the combined weight of the driver and passengers from XXX kg or XXX lbs.

(4) The resulting figure equals the available amount of cargo and luggage load capacity. For example, if "XXX" amount equals 1400 lbs. and there will be five 150 lb passengers in your vehicle, the amount of available cargo and luggage load capacity is 650 lbs. (1400-750 (5x150) = 650 lbs.)

(5) Determine the combined weight of luggage and cargo being loaded on the vehicle. That weight may not safely exceed the available cargo and luggage load capacity calculated in Step 4.

(6) If your vehicle will be towing a trailer, load from your trailer will be transferred to your vehicle. Consult this manual to determine how this reduces the available cargo and luggage load capacity of your vehicle.

Metric Example For Load Limit

For example, if "XXX" amount equals 635 kg and there will be five 68 kg passengers in your vehicle, the amount of available cargo and luggage load capacity is 295 kg (635-340 (5x68) = 295 kg) as shown in step 4.

NOTE:

- If your vehicle will be towing a trailer, load from your trailer will be transferred to your vehicle. The following table shows examples on how to calculate total load, cargo/luggage, and towing capacities of your vehicle with varying seating configurations and number and size of occupants. This table is for illustration purposes only and may not be accurate for the seating and load carry capacity of your vehicle.
- For the following example, the combined weight of occupants and cargo should never exceed 865 lbs (392 kg).

Occupants			Combined weight of occupants and cargo from Tire Placard	MINUS	Combined Occupant's weight	=	AVAILABLE Cargo/Luggage and Trailer Tongue Weight
TOTAL	FRONT	REAR					
EXAMPLE 1							
5	2	3	865 lbs	minus	Occupant 1: 200 lbs Occupant 2: 130 lbs Occupant 3: 160 lbs Occupant 4: 100 lbs Occupant 5: 80 lbs TOTAL WEIGHT: 670 lbs 670 lbs	=	195 lbs
EXAMPLE 2							
3	2	1	865 lbs	minus	Occupant 1: 210 lbs Occupant 2: 180 lbs Occupant 3: 150 lbs TOTAL WEIGHT: 540 lbs 540 lbs	=	325 lbs
EXAMPLE 3							
2	2	0	865 lbs	minus	Occupant 1: 200 lbs Occupant 2: 200 lbs TOTAL WEIGHT: 400 lbs 400 lbs	=	465 lbs

EXAMPLE

811a4d11

WARNING!

Overloading of your tires is dangerous. Overloading can cause tire failure, affect vehicle handling, and increase your stopping distance. Use tires of the recommended load capacity for your vehicle. Never overload them.

Tires — General Information

Tire Pressure

Proper tire inflation pressure is essential to the safe and satisfactory operation of your vehicle. Four primary areas are affected by improper tire pressure:

- Safety and Vehicle Stability
- Economy
- Tread Wear
- Ride Comfort

Safety

WARNING!

- **Improperly inflated tires are dangerous and can cause collisions.**
- **Underinflation increases tire flexing and can result in overheating and tire failure.**
- **Overinflation reduces a tire's ability to cushion shock. Objects on the road and chuckholes can cause damage that result in tire failure.**

(Continued)

WARNING! ***(Continued)***

- **Overinflated or underinflated tires can affect vehicle handling and can fail suddenly, resulting in loss of vehicle control.**
- **Unequal tire pressures can cause steering problems. You could lose control of your vehicle.**
- **Unequal tire pressures from one side of the vehicle to the other can cause the vehicle to drift to the right or left.**
- **Always drive with each tire inflated to the recommended cold tire inflation pressure.**

Both under-inflation and over-inflation affect the stability of the vehicle and can produce a feeling of sluggish response or over responsiveness in the steering.

NOTE:

- Unequal tire pressures from side to side may cause erratic and unpredictable steering response.
- Unequal tire pressure from side to side may cause the vehicle to drift left or right.

Fuel Economy

Underinflated tires will increase tire rolling resistance resulting in higher fuel consumption.

Tread Wear

Improper cold tire inflation pressures can cause abnormal wear patterns and reduced tread life, resulting in the need for earlier tire replacement.

Ride Comfort And Vehicle Stability

Proper tire inflation contributes to a comfortable ride. Over-inflation produces a jarring and uncomfortable ride.

Tire Inflation Pressures

The proper cold tire inflation pressure is listed on the driver's side B-Pillar or rear edge of the driver's side door.

At least once a month:

- Check and adjust tire pressure with a good quality pocket-type pressure gauge. Do not make a visual judgement when determining proper inflation. Tires may look properly inflated even when they are under-inflated.
- Inspect tires for signs of tire wear or visible damage.

CAUTION!

After inspecting or adjusting the tire pressure, always reinstall the valve stem cap. This will prevent moisture and dirt from entering the valve stem, which could damage the valve stem.

Inflation pressures specified on the placard are always "cold tire inflation pressure". Cold tire inflation pressure is defined as the tire pressure after the vehicle has not been driven for at least three hours, or driven less than 1 mile (1.6 km) after sitting for a minimum of three hours. The cold tire inflation pressure must not exceed the maximum inflation pressure molded into the tire sidewall.

Check tire pressures more often if subject to a wide range of outdoor temperatures, as tire pressures vary with temperature changes.

Tire pressures change by approximately 1 psi (7 kPa) per 12°F (7°C) of air temperature change. Keep this in mind when checking tire pressure inside a garage, especially in the Winter.

Example: If garage temperature = 68°F (20°C) and the outside temperature = 32°F (0°C) then the cold tire inflation pressure should be increased by 3 psi (21 kPa), which equals 1 psi (7 kPa) for every 12°F (7°C) for this outside temperature condition.

Tire pressure may increase from 2 to 6 psi (13 to 40 kPa) during operation. DO NOT reduce this normal pressure build up or your tire pressure will be too low.

Tire Pressures For High Speed Operation

The manufacturer advocates driving at safe speeds and within posted speed limits. Where speed limits or conditions are such that the vehicle can be driven at high speeds, maintaining correct tire inflation pressure is very important. Increased tire pressure and reduced vehicle loading may be required for high-speed vehicle operation. Refer to your authorized tire dealer or original equipment vehicle dealer for recommended safe operating speeds, loading and cold tire inflation pressures.

WARNING!

High speed driving with your vehicle under maximum load is dangerous. The added strain on your

(Continued)

WARNING! ***(Continued)***

tires could cause them to fail. You could have a serious collision. Do not drive a vehicle loaded to the maximum capacity at continuous speeds above 75 mph (120 km/h).

Radial Ply Tires

WARNING!

Combining radial ply tires with other types of tires on your vehicle will cause your vehicle to handle poorly. The instability could cause a collision. Always use radial ply tires in sets of four. Never combine them with other types of tires.

Tire Repair

If your tire becomes damaged, it may be repaired if it meets the following criteria:

- The tire has not been driven on when flat.
- The damage is only on the tread section of your tire (sidewall damage is not repairable).
- The puncture is no greater than a ¼ of an inch (6 mm).

Consult an authorized tire dealer for tire repairs and additional information.

Damaged Run Flat tires, or Run Flat tires that have experienced a loss of pressure should be replaced immediately with another Run Flat tire of identical size and service description (Load Index and Speed Symbol).

Run Flat Tires — If Equipped

Run Flat tires allow you the capability to drive 50 miles (80 km) at 50 mph (80 km/h) after a rapid loss of inflation pressure. This rapid loss of inflation is referred to as the Run Flat mode. A Run Flat mode occurs when the tire inflation pressure is of/or below 14 psi (96 kPa). Once a Run Flat tire reaches the run flat mode it has limited driving capabilities and needs to be replaced immediately. A Run Flat tire is not repairable.

It is not recommended driving a vehicle loaded at full capacity or to tow a trailer while a tire is in the run flat mode.

See the tire pressure monitoring section for more information.

Tire Spinning

When stuck in mud, sand, snow, or ice conditions, do not spin your vehicle's wheels above 30 mph (48 km/h) or for longer than 30 seconds continuously without stopping.

Refer to "Freeing A Stuck Vehicle" in "In Case Of Emergency" for further information.

WARNING!

Fast spinning tires can be dangerous. Forces generated by excessive wheel speeds may cause tire damage or failure. A tire could explode and injure someone. Do not spin your vehicle's wheels faster than 30 mph (48 km/h) for more than 30 seconds continuously when you are stuck, and do not let anyone near a spinning wheel, no matter what the speed.

Tread Wear Indicators

Tread wear indicators are in the original equipment tires to help you in determining when your tires should be replaced.

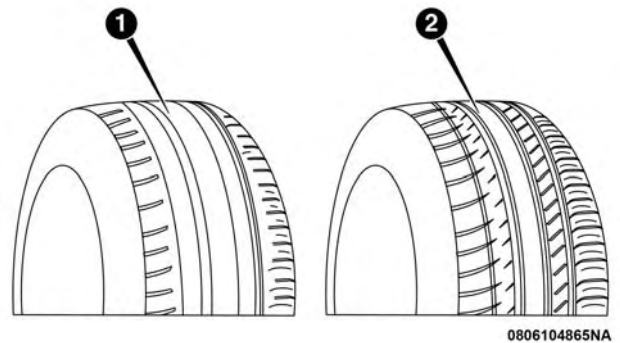

Tire Tread

1 — Worn Tire
2 — New Tire

These indicators are molded into the bottom of the tread grooves. They will appear as bands when the tread depth becomes a 1/16 of an inch (1.6 mm). When the tread is worn to the tread wear indicators, the tire should be replaced. Refer to "Replacement Tires" in this section for further information.

Life Of Tire

The service life of a tire is dependent upon varying factors including, but not limited to:

- Driving style.
- Tire pressure - Improper cold tire inflation pressures can cause uneven wear patterns to develop across the tire tread. These abnormal wear patterns will reduce tread life, resulting in the need for earlier tire replacement.
- Distance driven.
- Performance tires, tires with a speed rating of V or higher, and Summer tires typically have a reduced tread life. Rotation of these tires per the vehicle scheduled maintenance is highly recommended.

WARNING!

Tires and the spare tire should be replaced after six years, regardless of the remaining tread. Failure to

(Continued)

WARNING! ***(Continued)***

follow this warning can result in sudden tire failure. You could lose control and have a collision resulting in serious injury or death.

Keep dismounted tires in a cool, dry place with as little exposure to light as possible. Protect tires from contact with oil, grease, and gasoline.

Replacement Tires

The tires on your new vehicle provide a balance of many characteristics. They should be inspected regularly for wear and correct cold tire inflation pressures. The manufacturer strongly recommends that you use tires equivalent to the originals in size, quality and performance when replacement is needed. Refer to the paragraph on "Tread Wear Indicators" in this section. Refer to the Tire and Loading Information placard or the Vehicle Certification Label for the size designation of your tire. The Load Index and Speed Symbol for your tire will be found on the original equipment tire sidewall.

See the Tire Sizing Chart example found in the "Tire Safety Information" section of this manual for more information relating to the Load Index and Speed Symbol of a tire.

It is recommended to replace the two front tires or two rear tires as a pair. Replacing just one tire can seriously affect your vehicle's handling. If you ever replace a wheel, make sure that the wheel's specifications match those of the original wheels.

It is recommended you contact your authorized tire dealer or original equipment dealer with any questions you may have on tire specifications or capability. Failure to use equivalent replacement tires may adversely affect the safety, handling, and ride of your vehicle.

WARNING!

- **Do not use a tire, wheel size, load rating, or speed rating other than that specified for your vehicle. Some combinations of unapproved tires and wheels may change suspension dimensions and performance characteristics, resulting in changes to steering, handling, and braking of your vehicle.**

(Continued)

WARNING! *(Continued)*

This can cause unpredictable handling and stress to steering and suspension components. You could lose control and have a collision resulting in serious injury or death. Use only the tire and wheel sizes with load ratings approved for your vehicle.

- **Never use a tire with a smaller load index or capacity, other than what was originally equipped on your vehicle. Using a tire with a smaller load index could result in tire overloading and failure. You could lose control and have a collision.**
- **Failure to equip your vehicle with tires having adequate speed capability can result in sudden tire failure and loss of vehicle control.**

CAUTION!

Replacing original tires with tires of a different size may result in false speedometer and odometer readings.

Tire Types

All Season Tires — If Equipped

All Season tires provide traction for all seasons (Spring, Summer, Fall, and Winter). Traction levels may vary between different all season tires. All season tires can be identified by the M+S, M&S, M/S or MS designation on the tire sidewall. Use all season tires only in sets of four; failure to do so may adversely affect the safety and handling of your vehicle.

Summer Or Three Season Tires — If Equipped

Summer tires provide traction in both wet and dry conditions, and are not intended to be driven in snow or on ice. If your vehicle is equipped with Summer tires, be aware these tires are not designed for Winter or cold driving conditions. Install Winter tires on your vehicle when ambient temperatures are less than 40°F (5°C) or if roads are covered with ice or snow. For more information, contact an authorized dealer.

Summer tires do not contain the all season designation or mountain/snowflake symbol on the tire sidewall. Use Summer tires only in sets of four; failure to do so

may adversely affect the safety and handling of your vehicle.

WARNING!

Do not use Summer tires in snow/ice conditions. You could lose vehicle control, resulting in severe injury or death. Driving too fast for conditions also creates the possibility of loss of vehicle control.

Snow Tires

Some areas of the country require the use of snow tires during the Winter. Snow tires can be identified by a "mountain/snowflake" symbol on the tire sidewall.

If you need snow tires, select tires equivalent in size and type to the original equipment tires. Use snow tires only in sets of four; failure to do so may adversely affect the safety and handling of your vehicle.

Snow tires generally have lower speed ratings than what was originally equipped with your vehicle and should not be operated at sustained speeds over 75 mph (120 km/h). For speeds above 75 mph (120 km/h) refer to original equipment or an authorized tire dealer for recommended safe operating speeds, loading and cold tire inflation pressures.

While studded tires improve performance on ice, skid and traction capability on wet or dry surfaces may be poorer than that of non-studded tires. Some states prohibit studded tires; therefore, local laws should be checked before using these tire types.

Spare Tires — If Equipped

NOTE: For vehicles equipped with Tire Service Kit instead of a spare tire, please refer to "Tire Service Kit" in "In Case Of Emergency" for further information.

CAUTION!

Because of the reduced ground clearance, do not take your vehicle through an automatic car wash with a compact or limited use temporary spare installed. Damage to the vehicle may result.

Spare Tire Matching Original Equipped Tire And Wheel — If Equipped

Your vehicle may be equipped with a spare tire and wheel equivalent in look and function to the original

equipment tire and wheel found on the front or rear axle of your vehicle. This spare tire may be used in the tire rotation for your vehicle. If your vehicle has this option, refer to an authorized tire dealer for the recommended tire rotation pattern.

Compact Spare Tire — If Equipped

The compact spare is for temporary emergency use only. You can identify if your vehicle is equipped with a compact spare by looking at the spare tire description on the Tire and Loading Information Placard located on the driver's side door opening or on the sidewall of the tire. Compact spare tire descriptions begin with the letter "T" or "S" preceding the size designation. Example: T145/80D18 103M.

T, S = Temporary Spare Tire

Since this tire has limited tread life, the original equipment tire should be repaired (or replaced) and reinstalled on your vehicle at the first opportunity.

Do not install a wheel cover or attempt to mount a conventional tire on the compact spare wheel, since the wheel is designed specifically for the compact spare tire. Do not install more than one compact spare tire and wheel on the vehicle at any given time.

WARNING!

Compact and collapsible spares are for temporary emergency use only. With these spares, do not drive more than 50 mph (80 km/h). Temporary use spares have limited tread life. When the tread is worn to the tread wear indicators, the temporary use spare tire needs to be replaced. Be sure to follow the warnings, which apply to your spare. Failure to do so could result in spare tire failure and loss of vehicle control.

Collapsible Spare Tire — If Equipped

The collapsible spare is for temporary emergency use only. You can identify if your vehicle is equipped with a collapsible spare by looking at the spare tire description on the Tire and Loading Information Placard located on the driver's side door opening or on the sidewall of the tire.

Collapsible spare tire description example: 165/80-17 101P.

Since this tire has limited tread life, the original equipment tire should be repaired (or replaced) and reinstalled on your vehicle at the first opportunity.

Inflate collapsible tire only after the wheel is properly installed to the vehicle. Inflate the collapsible tire using the electric air pump before lowering the vehicle.

Do not install a wheel cover or attempt to mount a conventional tire on the collapsible spare wheel, since the wheel is designed specifically for the collapsible spare tire.

WARNING!

Compact and Collapsible spares are for temporary emergency use only. With these spares, do not drive more than 50 mph (80 km/h). Temporary use spares have limited tread life. When the tread is worn to the tread wear indicators, the temporary use spare tire needs to be replaced. Be sure to follow the warnings, which apply to your spare. Failure to do so could result in spare tire failure and loss of vehicle control.

Full Size Spare — If Equipped

The full size spare is for temporary emergency use only. This tire may look like the originally equipped tire on the front or rear axle of your vehicle, but it is not. This spare tire may have limited tread life. When the tread is worn to the tread wear indicators, the temporary use full size spare tire needs to be replaced. Since it is not the same as your original equipment tire, replace (or repair) the original equipment tire and reinstall on the vehicle at the first opportunity.

Limited Use Spare — If Equipped

The limited use spare tire is for temporary emergency use only. This tire is identified by a label located on the limited use spare wheel. This label contains the driving limitations for this spare. This tire may look like the original equipped tire on the front or rear axle of your vehicle, but it is not. Installation of this limited use spare tire affects vehicle handling. Since it is not the same as your original equipment tire, replace (or repair) the original equipment tire and reinstall on the vehicle at the first opportunity.

WARNING!

Limited use spares are for emergency use only. Installation of this limited use spare tire affects vehicle handling. With this tire, do not drive more than the speed listed on the limited use spare wheel. Keep inflated to the cold tire inflation pressures listed on your Tire and Loading Information Placard located on the driver's side B-Pillar or the rear edge of the driver's side door. Replace (or repair) the original equipment tire at the first opportunity and reinstall it on your vehicle. Failure to do so could result in loss of vehicle control.

Wheel And Wheel Trim Care

All wheels and wheel trim, especially aluminum and chrome plated wheels, should be cleaned regularly using mild (neutral Ph) soap and water to maintain their luster and to prevent corrosion. Wash wheels with the same soap solution recommended for the body of the vehicle.

Your wheels are susceptible to deterioration caused by salt, sodium chloride, magnesium chloride, calcium chloride, etc., and other road chemicals used to melt ice or control dust on dirt roads. Use a soft cloth or sponge and mild soap to wipe away promptly. Do not use harsh chemicals or a stiff brush. They can damage the wheel's protective coating that helps keep them from corroding and tarnishing.

CAUTION!

Avoid products or automatic car washes that use acidic solutions or strong alkaline additives or harsh brushes. Many aftermarket wheel cleaners and automatic car washes may damage the wheel's protective finish. Such damage is not covered by the New Vehicle Limited Warranty. Only car wash soap, Mopar Wheel Cleaner or equivalent is recommended.

When cleaning extremely dirty wheels including excessive brake dust, care must be taken in the selection of tire and wheel cleaning chemicals and equipment to prevent damage to the wheels. Mopar Wheel Treatment

or Mopar Chrome Cleaner or their equivalent is recommended or select a non-abrasive, non-acidic cleaner for aluminum or chrome wheels.

CAUTION!

Do not use scouring pads, steel wool, a bristle brush, metal polishes or oven cleaner. These products may damage the wheel's protective finish. Such damage is not covered by the New Vehicle Limited Warranty. Only car wash soap, Mopar Wheel Cleaner or equivalent is recommended.

NOTE: If you intend parking or storing your vehicle for an extended period after cleaning the wheels with wheel cleaner, drive your vehicle and apply the brakes to remove the water droplets from the brake components. This activity will remove the red rust on the brake rotors and prevent vehicle vibration when braking.

Dark Vapor Chrome, Black Satin Chrome, or Low Gloss Clear Coat Wheels

CAUTION!

If your vehicle is equipped with these specialty wheels, DO NOT USE wheel cleaners, abrasives, or polishing compounds. They will permanently damage this finish and such damage is not covered by the New Vehicle Limited Warranty. HAND WASH ONLY USING MILD SOAP AND WATER WITH A SOFT CLOTH. Used on a regular basis; this is all that is required to maintain this finish.

Tire Chains (Traction Devices)

Use of traction devices require sufficient tire-to-body clearance. Follow these recommendations to guard against damage.

- Traction device must be of proper size for the tire, as recommended by the traction device manufacturer.
- Install on Rear Tires Only.
- Reduced size snow chains with a maximum projection of 7 mm beyond the tire profile can be fitted on vehicles equipped with 235/40 R18 rear tire.

CAUTION!

To avoid damage to your vehicle or tires, observe the following precautions:

- **Because of restricted traction device clearance between tires and other suspension components, it is important that only traction devices in good condition are used. Broken devices can cause serious damage. Stop the vehicle immediately if noise occurs that could indicate device breakage. Remove the damaged parts of the device before further use.**
- **Install device as tightly as possible and then retighten after driving about ½ mile (0.8 km).**
- **Do not exceed 30 mph (48 km/h).**
- **Drive cautiously and avoid severe turns and large bumps, especially with a loaded vehicle.**
- **Do not drive for prolonged period on dry pavement.**
- **Observe the traction device manufacturer's instructions on the method of installation, operating speed, and conditions for use. Always use the suggested operating speed of the device manufacturer's if it is less than 30 mph (48 km/h).**

(Continued)

CAUTION! ***(Continued)***

- **Do not use traction devices on a compact spare tire.**

Tire Rotation Recommendations

Due to tire design and size, tire rotations on this vehicle are not possible.

NOTE: For AR 4C models, where available, the vehicle may be equipped with high performance tires that guarantee high grip performance with little increase of wear. Alfa Romeo, in collaboration with Pirelli, developed a specific high performance tire for the 4C model. A dedicated Pirelli P'Zero, identified with an AR mark, guarantees this vehicle to obtain the highest performance capable.

DEPARTMENT OF TRANSPORTATION UNIFORM TIRE QUALITY GRADES

The following tire grading categories were established by the National Highway Traffic Safety Administration. The specific grade rating assigned by the tire's manufacturer in each category is shown on the sidewall of the tires on your vehicle.

All passenger vehicle tires must conform to Federal safety requirements in addition to these grades.

Treadwear

The Treadwear grade is a comparative rating, based on the wear rate of the tire when tested under controlled conditions on a specified government test course. For example, a tire graded 150 would wear one and one-half times as well on the government course as a tire graded 100. The relative performance of tires depends upon the actual conditions of their use, however, and may depart significantly from the norm due to variations in driving habits, service practices, and differences in road characteristics and climate.

Traction Grades

The Traction grades, from highest to lowest, are AA, A, B, and C. These grades represent the tire's ability to stop on wet pavement, as measured under controlled conditions on specified government test surfaces of asphalt and concrete. A tire marked C may have poor traction performance.

WARNING!

The traction grade assigned to this tire is based on straight-ahead braking traction tests, and does not include acceleration, cornering, hydroplaning, or peak traction characteristics.

Temperature Grades

The Temperature grades are A (the highest), B, and C, representing the tire's resistance to the generation of heat and its ability to dissipate heat, when tested under controlled conditions on a specified indoor laboratory test wheel.

Sustained high temperature can cause the material of the tire to degenerate and reduce tire life, and excessive temperature can lead to sudden tire failure. The grade C corresponds to a level of performance, which all passenger vehicle tires must meet under the Federal Motor Vehicle Safety Standard No. 109. Grades B and A represent higher levels of performance on the laboratory test wheel, than the minimum required by law.

WARNING!

The temperature grade for this tire is established for a tire that is properly inflated and not overloaded. Excessive speed, under-inflation, or excessive loading, either separately or in combination, can cause heat buildup and possible tire failure.

VEHICLE STORAGE

If you are leaving your vehicle dormant for more than 21 days, you may want to take these steps to protect your battery.

- Disconnect the negative cable from the battery.
- Anytime you store your vehicle, or keep it out of service (e.g., vacation) for two weeks or more, run the air conditioning system at idle for about five minutes in the fresh air and high blower setting. This will ensure adequate system lubrication to minimize the possibility of compressor damage when the system is started again.

BODYWORK

Protection From Atmospheric Agents

Vehicle body care requirements vary according to geographic locations and usage. Chemicals that make roads passable in snow and ice and those that are sprayed on trees and road surfaces during other seasons are highly corrosive to the metal in your vehicle. Outside parking, which exposes your vehicle to airborne contaminants, road surfaces on which the vehicle is operated, extreme hot or cold weather and other extreme conditions will have an adverse effect on paint, metal trim, and underbody protection.

The following maintenance recommendations will enable you to obtain maximum benefit from the corrosion resistance built into your vehicle.

What Causes Corrosion?

Corrosion is the result of deterioration or removal of paint and protective coatings from your vehicle.

The most common causes are:

- Road salt, dirt and moisture accumulation.
- Stone and gravel impact.
- Insects, tree sap and tar.

- Salt in the air near seacoast localities.
- Atmospheric fallout/industrial pollutants.

Body And Underbody Maintenance

Cleaning Headlights

Your vehicle is equipped with plastic headlights and fog lights that are lighter and less susceptible to stone breakage than glass headlights.

Plastic is not as scratch resistant as glass and therefore different lens cleaning procedures must be followed.

To minimize the possibility of scratching the lenses and reducing light output, avoid wiping with a dry cloth. To remove road dirt, wash with a mild soap solution followed by rinsing.

Do not use abrasive cleaning components, solvents, steel wool or other aggressive material to clean the lenses.

Preserving The Bodywork

Washing

- Wash your vehicle regularly. Always wash your vehicle in the shade using Mopar Car Wash, or a mild car wash soap, and rinse the panels completely with clear water.
- If insects, tar, or other similar deposits have accumulated on your vehicle, use Mopar Super Kleen Bug and Tar Remover to remove.
- Use a high quality cleaner wax, such as Mopar Cleaner Wax to remove road film, stains, and to protect your paint finish. Take care never to scratch the paint.
- Avoid using abrasive compounds and power buffing that may diminish the gloss or thin out the paint finish.

NOTE: Hand washing is recommended. Avoid washing with power washers and do not use commercial car wash facilities.

CAUTION!

- **Do not use abrasive or strong cleaning materials such as steel wool or scouring powder that will scratch metal and painted surfaces.**
- **Use of power washers exceeding 1,200 psi (8 274 kPa) can result in damage or removal of paint and decals.**
- **If the engine compartment is washed with an high pressure jet, keep it at a distance of at least 8 inches (20 centimeters) from filler surface.**
- **Do not run this vehicle through an Automatic Car Wash facility as extensive damage can result due to the vehicle's low ground clearance.**

Special Care

- If you drive on salted or dusty roads or if you drive near the ocean, hose off the undercarriage at least once a month.
- It is important that the drain holes in the lower edges of the doors, rocker panels, and trunk be kept clear and open.
- If you detect any stone chips or scratches in the paint, touch them up immediately. The cost of such repairs is considered the responsibility of the owner.
- If your vehicle is damaged due to a collision or similar cause that destroys the paint and protective coating, have your vehicle repaired as soon as possible. The cost of such repairs is considered the responsibility of the owner.
- If you carry special cargo such as chemicals, fertilizers, de-icer salt, etc., be sure that such materials are well packaged and sealed.
- If a lot of driving is done on gravel roads, consider mud or stone shields behind each wheel.
- Use Mopar Touch Up Paint on scratches as soon as possible. Your authorized dealer has touch up paint to match the color of your vehicle.

INTERIORS

Seats And Fabric Parts

Use Mopar Total Clean to clean fabric upholstery and carpeting.

WARNING!

Do not use volatile solvents for cleaning purposes. Many are potentially flammable, and if used in closed areas they may cause respiratory harm.

Seat Belt Maintenance

Do not bleach, dye, or clean the belts with chemical solvents or abrasive cleaners. This will weaken the fabric. Sun damage can also weaken the fabric.

If the belts need cleaning, use Mopar Total Clean, a mild soap solution, or lukewarm water. Do not remove the belts from the vehicle to wash them. Dry with a soft cloth.

Replace the belts if they appear frayed or worn or if the buckles do not work properly.

NOTE: If the belts retract slowly, inspect the upper turning loop for soiling. If soiling is present, clean with a wet soft cloth until all residue is removed.

WARNING!

A frayed or torn belt could rip apart in a collision and leave you with no protection. Inspect the belt system periodically, checking for cuts, frays, or loose parts. Damaged parts must be replaced immediately. Do not disassemble or modify the system. Seat belt assemblies must be replaced after a collision if they have been damaged (i.e., bent retractor, torn webbing, etc.).

Plastic And Coated Parts

Use Mopar Total Clean to clean vinyl upholstery.

CAUTION!

- **Direct contact of air fresheners, insect repellents, suntan lotions, or hand sanitizers to the plastic, painted, or decorated surfaces of the interior may**

(Continued)

CAUTION! *(Continued)*

cause permanent damage. Wipe away immediately.

- **Damage caused by these type of products may not be covered by your New Vehicle Limited Warranty.**

Cleaning Plastic Instrument Cluster Lenses

The lenses in front of the instruments in this vehicle are molded in clear plastic. When cleaning the lenses, care must be taken to avoid scratching the plastic.

1. Clean with a wet soft cloth. A mild soap solution may be used, but do not use high alcohol content or abrasive cleaners. If soap is used, wipe clean with a clean damp cloth.
2. Dry with a soft cloth.

Leather Parts

Mopar Total Clean is specifically recommended for leather upholstery.

Your leather upholstery can be best preserved by regular cleaning with a damp soft cloth. Small particles of dirt can act as an abrasive and damage the leather upholstery and should be removed promptly with a damp cloth. Stubborn soils can be removed easily with a soft cloth and Mopar Total Clean. Care should be taken to avoid soaking your leather upholstery with any liquid. Please do not use polishes, oils, cleaning fluids, solvents, detergents, or ammonia-based cleaners to clean your leather upholstery. Application of a leather conditioner is not required to maintain the original condition.

NOTE: If equipped with light colored leather, it tends to show any foreign material, dirt, and fabric dye transfer more so than darker colors. The leather is designed for easy cleaning, and FCA recommends Mopar total care leather cleaner applied on a cloth to clean the leather seats as needed.

CAUTION!

Do not use Alcohol and Alcohol-based and/or Ketone based cleaning products to clean leather seats, as damage to the seat may result.

Glass Surfaces

All glass surfaces should be cleaned on a regular basis with Mopar, or any commercial household-type glass cleaner. Never use an abrasive type cleaner. Use caution when cleaning the inside rear window equipped. Do not use scrapers or other sharp instrument that may scratch the elements.

Labels can be peeled off after soaking with warm water (if equipped), keep all objects a safe distance from the windows.

When cleaning the rear view mirror, spray cleaner on the towel or cloth that you are using. Do not spray cleaner directly on the mirror.

TECHNICAL SPECIFICATIONS

CONTENTS

- VEHICLE IDENTIFICATION NUMBER 252
- WHEEL AND TIRE TORQUE SPECIFICATIONS 252
  - Torque Specifications 252
- BRAKE SYSTEM 254
- FUEL REQUIREMENTS — 1750 TURBO 254
  - Reformulated Gasoline 254
  - Materials Added To Fuel 255
  - Gasoline/Oxygenate Blends 255
  - E-85 Usage In Non-Flex Fuel Vehicles 256
  - CNG And LP Fuel System Modifications 256
  - MMT In Gasoline 256
  - Fuel System Cautions. 256
  - Carbon Monoxide Warnings 257
- FLUID CAPACITIES 258
- FLUIDS AND LUBRICANTS 259
  - Engine 259
  - Chassis 260

VEHICLE IDENTIFICATION NUMBER

The Vehicle Identification Number (VIN) is found on the left front corner of the instrument panel, visible through the windshield. This number also appears engraved on an Aluminum plate glued and riveted on the floor crossmember under the passenger seat.

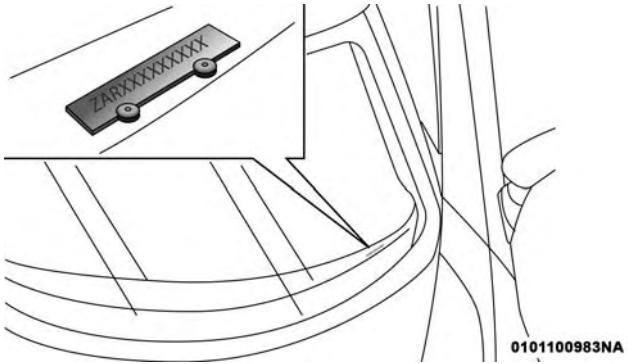

Vehicle Identification Number

NOTE: It is illegal to remove or alter the VIN.

WHEEL AND TIRE TORQUE SPECIFICATIONS

Proper lug nut/bolt torque is very important to ensure that the wheel is properly mounted to the vehicle. Any time a wheel has been removed and reinstalled on the vehicle, the lug nuts/bolts should be torqued using a properly calibrated torque wrench using a high quality six sided (hex) deep wall socket.

Torque Specifications

Lug Nut/Bolt Torque	**Lug Nut/ Bolt Size	Lug Nut/Bolt Socket Size
72 Ft-Lbs (98 N·m)	M12 x 1.25	17 mm

**Use only your authorized dealer recommended lug nuts/bolts and clean or remove any dirt or oil before tightening.

Inspect the wheel mounting surface prior to mounting the tire and remove any corrosion or loose particles.

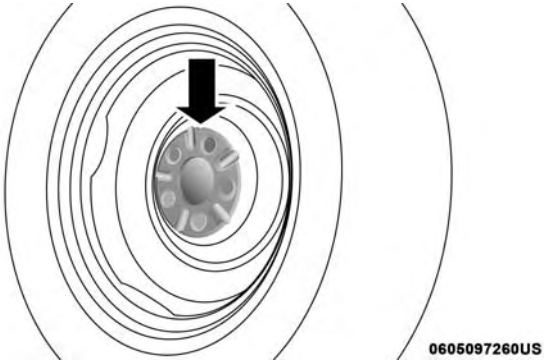

Wheel Mounting Surface

Tighten the lug nuts/bolts in a star pattern until each nut/bolt has been tightened twice. Ensure that the socket is fully engaged on the lug nut/bolt (do not insert it halfway).

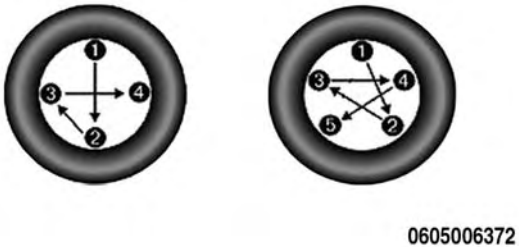

Torque Patterns

After 25 miles (40 km) check the lug nut/bolt torque to be sure that all the lug nuts/bolts are properly seated against the wheel.

WARNING!

To avoid the risk of forcing the vehicle off the jack, do not tighten the lug nuts fully until the vehicle has been lowered. Failure to follow this warning may result in personal injury.

BRAKE SYSTEM

Your vehicle is equipped with dual hydraulic brake systems. If either of the two hydraulic systems loses normal capability, the remaining system will still function. However, there will be some loss of overall braking effectiveness. You may notice increased pedal travel during application, greater pedal force required to slow or stop, and potential activation of the “Brake System Warning Light”.

In the event power assist is lost for any reason (i.e., repeated brake applications with the engine off), the brakes will still function. However, the effort required to brake the vehicle will be much greater than that required with the power system operating.

FUEL REQUIREMENTS — 1750 TURBO

The 1750 turbo engine is designed to meet all emissions regulations and provide excellent fuel economy and performance when using high-quality premium unleaded gasoline with an octane rating of **Only 91 or higher**.

Light spark knock at low engine speeds is not harmful to your engine. However, continued heavy spark knock at high speeds can cause damage and immediate service is required.

Poor quality gasoline can cause problems such as hard starting, stalling and hesitations. If you experience these symptoms, try another brand of gasoline (with the appropriate octane rating for your engine) before considering service for the vehicle.

Reformulated Gasoline

Many areas of the country require the use of cleaner burning gasoline referred to as “Reformulated Gasoline”. Reformulated gasoline contains oxygenates and are specifically blended to reduce vehicle emissions and improve air quality.

The use of reformulated gasoline is recommended. Properly blended reformulated gasoline will provide improved performance and durability of engine and fuel system components.

Materials Added To Fuel

Besides using unleaded gasoline with the proper octane rating, gasolines that contain detergents, corrosion and stability additives are recommended. Using gasolines that have these additives will help improve fuel economy, reduce emissions, and maintain vehicle performance.

Designated TOP TIER Detergent Gasoline contains a higher level of detergents to further aide in minimizing engine and fuel system deposits. When available, the usage of Top Tier Detergent gasoline is recommended. Visit www.toptiergas.com for a list of TOP TIER Detergent Gasoline Retailers.

Indiscriminate use of fuel system cleaning agents should be avoided. Many of these materials intended for gum and varnish removal may contain active solvents or similar ingredients. These can harm fuel system gasket and diaphragm materials.

Gasoline/Oxygenate Blends

Some fuel suppliers blend unleaded gasoline with oxygenates such as ethanol.

CAUTION!

DO NOT use gasoline containing methanol or gasoline containing more than 10% ethanol (E-10). Use of these blends may result in starting and drivability problems, damage critical fuel system components, cause emissions to exceed the applicable standard, and/or cause the "Malfunction Indicator Light" to illuminate. Please observe pump labels as they should clearly communicate if a fuel contains greater than 10% ethanol (E-10).

Problems that result from using gasoline containing more than 10% ethanol (E-10) or gasoline containing methanol are not the responsibility of the manufacturer and may void or not be covered under New Vehicle Limited Warranty.

E-85 Usage In Non-Flex Fuel Vehicles

Non-Flex Fuel Vehicles (FFV) are compatible with gasoline containing up to 10% ethanol (E-10). Gasoline with higher ethanol content may void the New Vehicle Limited Warranty.

If a Non-FFV vehicle is inadvertently fueled with E-85 fuel, the engine will have some or all of these symptoms:

- Operate in a lean mode.
- OBD II "Malfunction Indicator Light" on.
- Poor engine performance.
- Poor cold start and cold drivability.
- Increased risk for fuel system component corrosion.

CNG And LP Fuel System Modifications

Modifications that allow the engine to run on compressed natural gas (CNG) or liquid propane (LP) may result in damage to the engine, emissions, and fuel system components. Problems that result from running CNG or LP are not the responsibility of the manufacturer and may void or not be covered under the New Vehicle Limited Warranty.

MMT In Gasoline

Methylcyclopentadienyl Manganese Tricarbonyl (MMT) is a manganese-containing metallic additive that is blended into some gasoline to increase octane. Gasoline blended with MMT provides no performance advantage beyond gasoline of the same octane number without MMT. Gasoline blended with MMT reduces spark plug life and reduces emissions system performance in some vehicles. The manufacturer recommends that gasoline without MMT be used in your vehicle. The MMT content of gasoline may not be indicated on the gasoline pump; therefore, you should ask your gasoline retailer whether the gasoline contains MMT. MMT is prohibited in Federal and California reformulated gasoline.

Fuel System Cautions

CAUTION!

Follow these guidelines to maintain your vehicle's performance:

- **The use of leaded gasoline is prohibited by Federal law. Using leaded gasoline can impair engine**

(Continued)

CAUTION! *(Continued)*

performance and damage the emissions control system.

- **An out-of-tune engine or certain fuel or ignition malfunctions can cause the catalytic converter to overheat. If you notice a pungent burning odor or some light smoke, your engine may be out of tune or malfunctioning and may require immediate service. Contact your authorized dealer for service assistance.**
- **The use of fuel additives, which are now being sold as octane enhancers, is not recommended. Most of these products contain high concentrations of methanol. Fuel system damage or vehicle performance problems resulting from the use of such fuels or additives is not the responsibility of the manufacturer and may void or not be covered under the New Vehicle Limited Warranty.**

NOTE: Intentional tampering with the emissions control system can result in civil penalties being assessed against you.

Carbon Monoxide Warnings

WARNING!

Carbon monoxide (CO) in exhaust gases is deadly. Follow the precautions below to prevent carbon monoxide poisoning:

- **Do not inhale exhaust gases. They contain carbon monoxide, a colorless and odorless gas, which can kill. Never run the engine in a closed area, such as a garage, and never sit in a parked vehicle with the engine running for an extended period. If the vehicle is stopped in an open area with the engine running for more than a short period, adjust the ventilation system to force fresh, outside air into the vehicle.**
- **Guard against carbon monoxide with proper maintenance. Have the exhaust system inspected every time the vehicle is raised. Have any abnormal conditions repaired promptly. Until repaired, drive with all side windows fully open.**

FLUID CAPACITIES

	U.S.	Metric
Fuel (Approximate)		
1750 Turbo Engine	10.5 Gallons	40 Liters
Reserve Fuel	1.1 Gallons	4 Liters
Engine Oil with Filter		
1750 Turbo Engine	6.1 Quarts	5.8 Liters
Cooling System		
1750 Turbo Engine (Mopar Antifreeze/Engine Coolant 10 Year/150,000 Mile Formula).	11.2 Quarts	10.6 Liters

FLUIDS AND LUBRICANTS

Engine

Component	Fluid, Lubricant, or Genuine Part
Engine Coolant – 1750 Turbo Engine	We recommend you use Mopar Antifreeze/Coolant 10 Year/150,000 Mile Formula OAT (Organic Additive Technology) or equivalent meeting the requirements of FCA Material Standard MS.90032.
Engine Oil – 1750 Turbo Engine	We recommend you use SAE 5W-40 API Certified Synthetic Engine Oil, meeting the requirements of FCA Material Standard MS-12991.
Engine Oil Filter – 1750 Turbo Engine	We recommend you use Mopar Engine Oil Filter.
Spark Plugs – 1750 Turbo Engine	We recommend you use Mopar Spark Plugs. *
Fuel Selection – 1750 Turbo Engine	Use Only 91 Octane or higher, 0-10% Ethanol.

NOTE: * The following are essential to ensure correct operation and prevent serious damage to the engine: only use spark plugs of the same make and type, which are specially certified for such engines that strictly comply with the spark plug replacement interval given in the maintenance schedule. For spark plug replacement, it is advisable to contact the dedicated Alfa Romeo Dealership. Refer to “Scheduled Servicing” in “Servicing And Maintenance” for the required spark plug intervals.

Chassis

Component	Fluid, Lubricant, or Genuine Part
Alfa Twin Clutch Transmission	• Gearbox: Full synthetic 75W-85 manual transmission fluid meeting MS.90021 or FPW9.55550–MZ3 or the API GL4 specification. • Control System: Use only Mopar C Series DDCT SAE 75W Hydraulic Fluid or equivalent. Failure to use the correct fluid may affect the function or performance of your transmission.
Brake Master Cylinder	We recommend you use Mopar DOT 4 meeting MS.90039. If DOT 4 brake fluid is not available, then DOT 3 is acceptable. DOT 4 brake fluid must be changed every two years regardless of mileage.

MULTIMEDIA

CONTENTS

- CYBERSECURITY. 262
- RADIO SYSTEM. 263
- RADIO OPERATION AND MOBILE PHONES .264
  - General Information 264

CYBERSECURITY

Your vehicle may be a connected vehicle and may be equipped with both wired and wireless networks. These networks allow your vehicle to send and receive information. This information allows systems and features in your vehicle to function properly.

Your vehicle may be equipped with certain security features to reduce the risk of unauthorized and unlawful access to vehicle systems and wireless communications. Vehicle software technology continues to evolve over time and FCA US LLC, working with its suppliers, evaluates and takes appropriate steps as needed. Similar to a computer or other devices, your vehicle may require software updates to improve the usability and performance of your systems or to reduce the potential risk of unauthorized and unlawful access to your vehicle systems.

The risk of unauthorized and unlawful access to your vehicle systems may still exist, even if the most recent version of vehicle software (such as Uconnect software) is installed.

WARNING!

- **It is not possible to know or to predict all of the possible outcomes if your vehicle's systems are breached. It may be possible that vehicle systems, including safety related systems, could be impaired or a loss of vehicle control could occur that may result in an accident involving serious injury or death.**
- **ONLY insert media (e.g., USB, SD card, or CD) into your vehicle if it came from a trusted source. Media of unknown origin could possibly contain malicious software, and if installed in your vehicle, it may increase the possibility for vehicle systems to be breached.**
- **As always, if you experience unusual vehicle behavior, take your vehicle to your nearest authorized dealer immediately.**

NOTE:

- FCA US LLC or your dealer may contact you directly regarding software updates.
- To help further improve vehicle security and minimize the potential risk of a security breach, vehicle owners should:
  - Routinely check www.driveuconnect.com/software-update to learn about available Uconnect software updates.
  - Only connect and use trusted media devices (e.g. personal mobile phones, USBs, CDs).

Privacy of any wireless and wired communications cannot be assured. Third parties may unlawfully intercept information and private communications without your consent. For further information, refer to "On-board Diagnostic System (OBD II) Cybersecurity" in "Getting To Know Your Instrument Panel".

RADIO SYSTEM

The radio system consists of:

- Supply cables for radio, speakers and antenna
- Radio
- Antenna located on the inside of the front fascia
- Two tweeter speakers with 1 inch (25 mm) diameter and two mid-woofer speakers with 5 inch (130 mm) diameter, fitted on the doors

Hi Fi System — If Equipped

The Hi Fi radio system consists of:

- Supply cables for radio, speakers, and antenna
- Radio
- Antenna located on the inside of the front fascia
- An amplifier located in the passenger footwell
- Two tweeter speakers with 1 inch (25 mm) diameter and two woofer speakers with 5 inch (130 mm) diameters, fitted on the doors
- A Fresh-Air subwoofer mounted in the rear of the vehicle

NOTE: Be sure to press the RESET button when using the unit for the first time, after changing the vehicle battery, or using the battery disconnect (anytime the vehicle loses power).

For further information on radio functions and use, refer to the Alpine Radio Supplement.

RADIO OPERATION AND MOBILE PHONES

Under certain conditions, the mobile phone being on in your vehicle can cause erratic or noisy performance from your radio. This condition may be lessened or eliminated by relocating the mobile phone antenna. This condition is not harmful to the radio. If your radio performance does not satisfactorily "clear" by the repositioning of the antenna, it is recommended that the radio volume be turned down or off during mobile phone operation.

General Information

The following regulatory statement applies to all Radio Frequency (RF) devices equipped in this vehicle:

This device complies with Part 15 of the FCC Rules and with Industry Canada license-exempt RSS standard(s). Operation is subject to the following two conditions:

- This device may not cause harmful interference, and
- This device must accept any interference received, including interference that may cause undesired operation.

NOTE: Changes or modifications not expressly approved by the party responsible for compliance could void the user's authority to operate the equipment.

CUSTOMER ASSISTANCE

CONTENTS

- SUGGESTIONS FOR OBTAINING SERVICE FOR YOUR VEHICLE 266
  - Prepare For The Appointment. 266
  - Prepare A List 266
  - Be Reasonable With Requests 266
- IF YOU NEED ASSISTANCE 266
  - FCA US LLC Customer Center 267
  - FCA Canada Inc. Customer Center 267
  - In Mexico Contact 267
  - Puerto Rico And U.S. Virgin Islands 267
  - Customer Assistance For The Hearing Or Speech Impaired (TDD/TTY). 268
  - Service Contract 268
- WARRANTY INFORMATION 269
- MOPAR PARTS 269
- REPORTING SAFETY DEFECTS 269
  - In The 50 United States And Washington, D.C. 269
  - In Canada. 270
- PUBLICATION ORDER FORMS 270

SUGGESTIONS FOR OBTAINING SERVICE FOR YOUR VEHICLE

Prepare For The Appointment

If you are having warranty work done, be sure to have the right papers with you. Take your warranty folder. All work to be performed may not be covered by the warranty. Discuss additional charges with the service manager. Keep a maintenance log of your vehicle's service history. This can often provide a clue to the current problem.

Prepare A List

Make a written list of your vehicle's problems or the specific work you want done. If you've had an accident or work done that is not on your maintenance log, let the service advisor know.

Be Reasonable With Requests

If you list a number of items and you must have your vehicle by the end of the day, discuss the situation with the service advisor and list the items in order of priority. At many authorized dealers, you may obtain a rental vehicle at a minimal daily charge. If you need a rental, it is advisable to make these arrangements when you call for an appointment.

IF YOU NEED ASSISTANCE

The manufacturer and its authorized dealer are vitally interested in your satisfaction. We want you to be happy with our products and services.

Warranty service must be done by an authorized dealer. We strongly recommend that you take the vehicle to an authorized dealer. They know your vehicle the best, and are most concerned that you get prompt and high quality service. The manufacturer's authorized dealer have the facilities, factory-trained technicians, special tools, and the latest information to ensure the vehicle is fixed correctly and in a timely manner.

This is why you should always talk to an authorized dealer service manager first. Most matters can be resolved with this process.

- If for some reason you are still not satisfied, talk to the general manager or owner of the authorized dealer. They want to know if you need assistance.
- If an authorized dealer is unable to resolve the concern, you may contact the manufacturer's customer center.

Any communication to the manufacturer's customer center should include the following information:

- Owner's name and address
- Owner's telephone number (home and office)
- Authorized dealer name
- Vehicle Identification Number (VIN)
- Vehicle delivery date and mileage

FCA US LLC Customer Center

P.O. Box 21–8004

Auburn Hills, MI 48321–8004

Phone: 1-844-Alfa-USA (1-844-253-2872)

FCA Canada Inc. Customer Center

P.O. Box 1621

Windsor, Ontario N9A 4H6

Phone: (800) 465-2001 English / (800) 387-9983 French

In Mexico Contact

Av. Prolongacion Paseo de la Reforma, 1240

Sante Fe C.P. 05109

Mexico, D. F.

In Mexico City: 5081-7568

Outside Mexico City: 1-800-505-1300

Puerto Rico And U.S. Virgin Islands

Customer Service Chrysler International Services LLC

P.O. Box 191857

San Juan 00919-1857

Tel.: (787) 782-5757

Fax: (787) 782-3345

Customer Assistance For The Hearing Or Speech Impaired (TDD/TTY)

To assist customers who have hearing difficulties, the manufacturer has installed special TDD (Telecommunication Devices for the Deaf) equipment at its customer center. Any hearing or speech impaired customer, who has access to a TDD or a conventional teletypewriter (TTY) in the United States, can communicate with the manufacturer by dialing 1-800-380-CHRY.

Canadian residents with hearing difficulties that require assistance can use the special needs relay service offered by Bell Canada. For TTY teletypewriter users, dial 711 and for Voice callers, dial 1-800-855-0511 to connect with a Bell Relay Service operator.

Service Contract

You may have purchased a service contract for a vehicle to help protect you from the high cost of unexpected repairs after the manufacturer's New Vehicle Limited Warranty expires. The manufacturer stands behind only the manufacturer's service contracts. If you purchased a manufacturer's service contract, you will receive Plan Provisions and an Owner Identification Card in the mail within three weeks of the vehicle delivery date. If you have any questions about the service contract, call the manufacturer's Service Contract National Customer Hotline at 1-800-521-9922 (Canadian residents, call (800) 465-2001 English / (800) 387-9983 French).

The manufacturer will not stand behind any service contract that is not the manufacturer's service contract. It is not responsible for any service contract other than the manufacturer's service contract. If you purchased a service contract that is not a manufacturer's service contract, and you require service after the manufacturer's New Vehicle Limited Warranty expires, please refer to the contract documents, and contact the person listed in those documents.

We appreciate that you have made a major investment when you purchased the vehicle. An authorized dealer has also made a major investment in facilities, tools, and training to assure that you are absolutely delighted with the ownership experience. You will be pleased with their sincere efforts to resolve any warranty issues or related concerns.

WARNING!

Engine exhaust (internal combustion engines only), some of its constituents, and certain vehicle components contain, or emit, chemicals known to the State of California to cause cancer and birth defects, or other reproductive harm. In addition, certain fluids contained in vehicles and certain products of component wear contain, or emit, chemicals known to the State of California to cause cancer and birth defects, or other reproductive harm.

WARRANTY INFORMATION

See the Warranty Information Booklet for the terms and provisions of FCA US LLC warranties applicable to this vehicle and market.

MOPAR PARTS

Mopar fluids, lubricants, parts, and accessories are available from an authorized dealer. They are recommended for your vehicle in order to help keep the vehicle operating at its best.

REPORTING SAFETY DEFECTS

In The 50 United States And Washington, D.C.

If you believe that your vehicle has a defect that could cause a crash or cause injury or death, you should immediately inform the National Highway Traffic Safety Administration (NHTSA) in addition to notifying FCA US LLC.

If NHTSA receives similar complaints, it may open an investigation, and if it finds that a safety defect exists in a group of vehicles, it may order a recall and remedy campaign. However, NHTSA cannot become involved in individual problems between you, your authorized dealer or FCA US LLC.

To contact NHTSA, you may call the Vehicle Safety Hotline toll free at 1-888-327-4236 (TTY: 1-800-424-9153); or go to http://www.safercar.gov; or write to: Administrator, NHTSA, 1200 New Jersey Avenue, SE., West Building, Washington, D.C. 20590. You can also obtain other information about motor vehicle safety from http://www.safercar.gov.

In Canada

If you believe that your vehicle has a safety defect, you should contact the Customer Service Department immediately. Canadian customers who wish to report a safety defect to the Canadian government should contact Transport Canada, Motor Vehicle Defect Investigations and Recalls at 1-800-333-0510 or go to http://www.tc.gc.ca/roadsafety/.

PUBLICATION ORDER FORMS

To order the following manuals, you may use either the website or the phone numbers listed below. Visa, Mastercard, American Express, and Discover orders are accepted.

Service Manuals

These comprehensive Service Manuals provide the information that students and professional technicians need in diagnosing/troubleshooting, problem solving, maintaining, servicing, and repairing FCA US LLC vehicles. A complete working knowledge of the vehicle, system, and/or components is written in straightforward language with illustrations, diagrams, and charts.

Diagnostic Procedure Manuals

Diagnostic Procedure Manuals are filled with diagrams, charts and detailed illustrations. These practical manuals make it easy for students and technicians to find and fix problems on computer-controlled vehicle systems and features. They show exactly how to find and correct problems the first time, using step-by-step troubleshooting and drivability procedures, proven diagnostic tests and a complete list of all tools and equipment.

Owner's Manuals

These Owner's Manuals have been prepared with the assistance of service and engineering specialists to acquaint you with specific FCA US LLC vehicles. Included are starting, operating, emergency and maintenance procedures as well as specifications, capabilities and safety tips.

Call toll free at:

- **1-800-890-4038 (U.S.)**
- **1-800-387-1143 (Canada)**

Or

Visit us on the Worldwide Web at:

- www.techauthority.com

INDEX

Adding Engine Coolant (Antifreeze) 214
Adding Fuel 152
Adding Washer Fluid 200
Additives, Fuel 255
Air Bag 105
  Air Bag Operation 107
  Air Bag Warning Light 104
  Driver Knee Air Bag 108
  Enhanced Accident Response 187
  Event Data Recorder (EDR) 188
  If A Deployment Occurs 112
  Knee Impact Bolsters 108
  Maintaining Your Air Bag System 115
  Transporting Pets 124
Air Bag Light 71, 104, 126
Air Bag Maintenance 115
Air Cleaner, Engine (Engine Air Cleaner Filter) . . .206
Air Conditioner Maintenance 206
Air Conditioning Refrigerant 206, 207
Air Conditioning System 206
Air Filter 206
Air Pressure, Tires 231
Alarm System (Security Alarm) 20
Alfa DNA System (Dynamic Car Control System) .141
Alfa Twin Clutch Transmission 77, 135
  Fluid Type 220, 260
Alterations/Modifications, Vehicle 6
Antifreeze (Engine Coolant) 213, 258
  Capacities 258
  Disposal 215
Anti-Lock Brake System (ABS) 82
Anti-Lock Warning Light 74
Automatic Transaxle 17
Automatic Transmission 135
  Fluid Type 260
Auxiliary Electrical Outlet (Power Outlet) 50

Battery 72, 203
  Charging System Light 72
  Keyless Key Fob Replacement 16
Belts, Seat 125
Body Mechanism Lubrication 207
B-Pillar Location 226
Brake Fluid 260
Brake, Parking 134
Brake System 217, 254
  Anti-Lock (ABS) 82
  Master Cylinder 217
  Parking 134
  Warning Light 69

Break-In Recommendations, New Vehicle 133
Bulb Replacement 160
Bulbs, Light 128, 160

Capacities, Antifreeze (Engine Coolant) 258
Capacities, Fluid 258
Caps, Filler
  Oil (Engine) 199, 205
  Radiator (Coolant Pressure) 215
Carbon Monoxide Warning 125, 257
Car Washes 245
Cellular Phone 264
Chains, Tire 241
Changing A Flat Tire 221
Chart, Tire Sizing 222
Check Engine Light (Malfunction Indicator Light) . .79
Checking Your Vehicle For Safety 124
Checks, Safety 124
Child Restraint 116
Child Restraints
  Booster Seats 120
  Child Restraints 116
  Child Seat Installation 122
  Infants And Child Restraints 118
  Older Children And Child Restraints 119
Clean Air Gasoline 254
Cleaning
  Wheels 240
  Windshield Wiper Blades 208
Climate Control 35
  Manual 35
Compact Spare Tire 238
Contract, Service 268
Coolant (Antifreeze) 258, 259
Coolant Pressure Cap (Radiator Cap) 215
Cooling System 212
  Adding Coolant (Antifreeze) 214
  Coolant Level 212, 215
  Disposal Of Used Coolant 215
  Drain, Flush, And Refill 213
  Inspection 215
  Points To Remember 216
  Pressure Cap 215
  Radiator Cap 215
  Selection Of Coolant (Antifreeze) 213
Corrosion Protection 244
Cruise Light 77
Cupholders 50
Customer Assistance 266

Daytime Running Lights 31
Dealer Service. 204
Deck Lid, Release 43
Defroster, Windshield 126
Delay (Intermittent) Wipers 34
Diagnostic System, Onboard 77
Dimmer Control 33
Disabled Vehicle Towing 184
Disposal
  Antifreeze (Engine Coolant) 215
Door Locks
  Child-Protection Door Lock — Rear Doors 23
Driver's Seat Back Tilt. 24
Driving
  Through Flowing, Rising, Or Shallow Standing Water 156

Electrical Outlet, Auxiliary (Power Outlet) 50
Electrical Power Outlets 50
Electric Remote Mirrors. 29
Electronic Brake Control System. 83
Electronic Speed Control (Cruise Control) 146
Electronic Throttle Control Warning Light. 71
Emergency, In Case Of
  Hazard Warning Flasher 160
  Jacking 221
  Jump Starting 180
  Overheating 183
  Towing 184
Emission Control System Maintenance 79
Engine 199
  Air Cleaner 206
  Break-In Recommendations 133
  Checking Oil Level 200
  Compartment 199
  Cooling 212
  Exhaust Gas Caution 125, 257
  Fails To Start 132
  Flooded, Starting 132
  Fuel Requirements 254
  Jump Starting 180
  Oil 204, 258
  Oil Filler Cap 199, 205
  Oil Filter 205
  Oil Selection 205
  Overheating 183
  Starting 131
Enhanced Accident Response Feature 187
Ethanol 255

Euro Twin Clutch Transmission
Fluid Type 221
Exhaust Gas Caution 125, 257
Exhaust System 125, 210
Exterior Lights. 30, 128

Filters
Air Cleaner 206
Engine Fuel 259
Engine Oil 205
Engine Oil Disposal 205
Flashers
Hazard Warning 160
Turn Signal 77, 128
Flooded Engine Starting 132
Fluid, Brake 260
Fluid Capacities 258
Fluid Leaks 128
Fluids And Lubricants. 259
Folding Rear Seat 24
Four-Way Hazard Flasher 160
Fuel. 254
Adding 152
Additives 255
Capacity 258
Clean Air 254
Ethanol 255
Gasoline 254
Materials Added 255
Methanol 255
Octane Rating 254
Requirements 254
Tank Capacity 258
Fueling 152
Fuses. 171

Gasoline, Clean Air 254
Gasoline (Fuel). 254, 258
Gasoline, Reformulated 254
General Information. 92, 264
General Maintenance. 204
Glass Cleaning 249

Hazard
Driving Through Flowing, Rising, Or Shallow Standing Water 156
Hazard Warning Flasher 160
Headlights. 30
Cleaning 245
Passing 31

Head Restraints 26
Heated Mirrors. 29
Heater 39
Holder, Cup 50

Ignition 17
  Key 15, 17
Ignition Key Removal 17
Immobilizer (Sentry Key) 19
Inside Rearview Mirror 27
Instrument Cluster 77
  Instrument Cluster 54
Instrument Panel Lens Cleaning 248
Interior And Instrument Lights 32
Interior Appearance Care. 247
Interior Lights 32
Intermittent Wipers (Delay Wipers) 34
Introduction 4

Jack Operation 221
Jump Starting 180

Key Fob
  Unlock The Doors 15
Key Fob Battery Service (Remote Keyless Entry) . . .16
Key-In Reminder 19
Key, Replacement 19
Keys 15
Key, Sentry (Immobilizer) 19

Lane Change Assist 32
Lap/Shoulder Belts. 96
Latches 128
Lead Free Gasoline 254
Leaks, Fluid 128
Life Of Tires 234
Light Bulbs 128, 160
Lights 30, 128
  Air Bag 71, 104, 126
  Brake Warning 69
  Bulb Replacement 160
  Cruise 77
  Engine Temperature Warning 72
  Exterior 128
  Hazard Warning Flasher 160
  Interior 32
  Malfunction Indicator (Check Engine) 76
  Park 31, 77
  Passing 31
  Seat Belt Reminder 72

Service 160
Tire Pressure Monitoring (TPMS) 73, 88
Turn Signal 77, 128
Warning (Instrument Cluster Description) . . .72, 77
Loading Vehicle
Tires 226
Locks
Power Door 22
Low Tire Pressure System 88
Lubrication, Body 207
Lug Nuts 252

Maintenance Free Battery. 203
Maintenance, General 204
Maintenance Procedures 204
Maintenance Schedule 191
Malfunction Indicator Light (Check Engine) 76, 79
Manual, Service 270
Manual Transmission
Lubricant Selection 260
Master Cylinder (Brakes) 217
Memory Feature (Memory Seat). 24
Memory Seat 24
Memory Seats And Radio 24
Methanol 255

Mirrors 27
Electric Remote 29
Heated 29
Outside 28, 29
Rearview 27
Modifications/Alterations, Vehicle 6
Monitor, Tire Pressure System 88
Mopar Parts 269
MTBE/ETBE 255
Multi-Function Control Lever 30

New Vehicle Break-In Period 133

Occupant Restraints 92
Octane Rating, Gasoline (Fuel) 254
Oil, Engine 204, 258, 259
Capacity 258
Change Interval 204
Checking 200
Disposal 205
Filter 205
Filter Disposal 205
Materials Added To 205
Pressure Warning Light 71
Recommendation 205, 258

Viscosity 205
Oil Filter, Change 205
Oil Filter, Selection 205
Oil Pressure Light. 71
Onboard Diagnostic System. 77
Operating Precautions. 77
Operator Manual (Owner's Manual) 5
Outside Rearview Mirrors 28
Overheating, Engine 183
Owner's Manual (Operator Manual) 5, 270

Paint Care 244
Parking Brake. 134
Passing Light 31
Pets 124
Placard, Tire And Loading Information 226
Power
Door Locks 22
Mirrors 29
Windows 41
Pregnant Women And Seat Belts. 100
Pretensioners
Seat Belts 101

Radial Ply Tires 232
Radiator Cap (Coolant Pressure Cap) 215
Radio Frequency
General Information 17, 20
Radio Operation 264
Rear Seat, Folding 24
Reclining Front Seats 25
Recreational Towing 154
Reformulated Gasoline 254
Refrigerant 207
Reminder, Seat Belt. 94
Remote Keyless Entry
Unlock The Doors 15
Replacement Bulbs 160
Replacement Keys 19
Replacement Tires 235
Reporting Safety Defects 269
Restraint, Head 26
Restraints, Child 116
Rotation, Tires 242

Safety Checks Inside Vehicle 125
Safety Checks Outside Vehicle 128
Safety Defects, Reporting 269
Safety, Exhaust Gas 125
Safety Information, Tire 221

Safety Tips 124
Schedule, Maintenance 191
Seat Belt
  Automatic Locking Retractor (ALR) 101
  Energy Management Feature 101
  Lap/Shoulder Belt Operation 98
  Lap/Shoulder Belts 96
  Lap/Shoulder Belt Untwisting 100
  Pregnant Women 100
  Seat Belt Pretensioner 101
  Seat Belt Reminder 94
Seat Belt Maintenance 247
Seat Belt Reminder 94
Seat Belts 94, 125
  Child Restraint 116
  Front Seat 94, 96, 98
  Inspection 125
  Operating Instructions 98
  Pregnant Women 100
  Pretensioners 101
  Rear Seat 96
  Reminder 72
  Untwisting Procedure 100
Seats 24
  Adjustment 24
  Easy Entry 24
  Heated 24
  Memory 24
  Rear Folding 24
  Reclining 25
  Seatback Release 24
  Tilting 24
  Vented 24
  Ventilated 24
Security Alarm 20
Sentry Key (Immobilizer) 19
Service Assistance 266
Service Contract 268
Service Manuals 270
Shoulder Belts 96
Signals, Turn 77, 128
Snow Chains (Tire Chains). 241
Snow Tires 237
Spare Tire 237, 238, 239
Spark Plugs 259
Speed Control
  Accel/Decel 148
Speed Control (Cruise Control). 146
Starting 131
  Automatic Transmission 131

Cold Weather 132
Engine Fails To Start 132
Steering 27
Column Lock 27
Tilt Column 27
Wheel, Tilt 27
Storage 244
Storage, Vehicle 244
Storing Your Vehicle 244
Supplemental Restraint System - Air Bag. 105

Telescoping Steering Column 27
Tilt Steering Column 27
Tire And Loading Information Placard 226
Tire Markings 221
Tires 128, 230, 237, 242
Aging (Life Of Tires) 234
Air Pressure 230
Chains 241
Changing 221
Compact Spare 238
General Information 230, 237
High Speed 232
Inflation Pressures 231
Jacking 221
Life Of Tires 234
Load Capacity 226, 227
Pressure Monitor System (TPMS) 88
Pressure Warning Light 73
Quality Grading 242
Radial 232
Replacement 235
Rotation 242
Safety 221, 230
Sizes 222
Snow Tires 237
Spare Tire 237, 239
Spinning 233
Tread Wear Indicators 234
Wheel Nut Torque 252
Tire Safety Information 221
To Open Deck Lid 43
Towing 154
Disabled Vehicle 184
Recreational 154
Towing Eyes 184
Towing Vehicle Behind A Motorhome 154
Traction 155
Trailer Towing 154

Transaxle
Automatic 17
Transmission 136
Automatic 135
Fluid 220
Maintenance 220
Transporting Pets 124
Tread Wear Indicators 234
Turn Signals. 77

Uniform Tire Quality Grades 242
Unleaded Gasoline 254
Untwisting Procedure, Seat Belt 100

Vehicle Identification Number (VIN). 252
Vehicle Loading 227
Vehicle Modifications/Alterations 6
Vehicle Security Alarm (Security Alarm) 20
Vehicle Storage 244

Warning Flasher, Hazard 160
Warning Lights (Instrument Cluster Description) . . .75
Warnings And Cautions 6
Warranty Information 269

Washer
Adding Fluid 200
Washers, Windshield. 34
Washing Vehicle 245
Water
Driving Through 156
Wheel And Wheel Trim 240
Wheel And Wheel Trim Care 240
Windows 41
Power 41
Windshield Defroster. 126
Windshield Washers 34
Windshield Wiper Blades. 208
Windshield Wipers 34
Wiper Blade Replacement 208
Wipers, Intermittent 34

INSTALLATION OF RADIO TRANSMITTING EQUIPMENT

Special design considerations are incorporated into this vehicle's electronic system to provide immunity to radio frequency signals. Mobile two-way radios and telephone equipment must be installed properly by trained personnel. The following must be observed during installation.

The positive power connection should be made directly to the battery and fused as close to the battery as possible. The negative power connection should be made to body sheet metal adjacent to the negative battery connection. This connection should not be fused.

Antennas for two-way radios should be mounted on the roof or the rear area of the vehicle. Care should be used in mounting antennas with magnet bases. Magnets may affect the accuracy or operation of the compass on vehicles so equipped.

The antenna cable should be as short as practical and routed away from the vehicle wiring when possible. Use only fully shielded coaxial cable.

Carefully match the antenna and cable to the radio to ensure a low Standing Wave Ratio (SWR).

Mobile radio equipment with output power greater than normal may require special precautions.

All installations should be checked for possible interference between the communications equipment and the vehicle's electronic systems.

4C

184C-126-AA
©2017 FCA US LLC. All Rights Reserved.
ALFA ROMEO is a registered trademark of
FCA Group Marketing S.p.A., used with permission.

First Edition
Printed in U.S.A.