2021

CT4

cadillac.com (U.S.)
cadillac.ca (Canada)

Contents

Introduction 1
Keys, Doors, and Windows 6
Seats and Restraints 30
Storage 78
Instruments and Controls 81
Lighting 126
Infotainment System 134
Climate Controls 196
Driving and Operating 202
Vehicle Care 304
Service and Maintenance 379
Technical Data 395
Customer Information 399
Reporting Safety Defects 409
OnStar 413
Connected Services 418
Index 421

Litho in U.S.A.
Part No. 84432194 B Second Printing

Introduction

The names, logos, emblems, slogans, vehicle model names, and vehicle body designs appearing in this manual including, but not limited to, GM, the GM logo, the CADILLAC Emblem, and CADILLAC CT4 are trademarks and/or service marks of General Motors LLC, its subsidiaries, affiliates, or licensors.

For vehicles first sold in Canada, substitute the name “General Motors of Canada Company” for Cadillac Motor Car Division wherever it appears in this manual.

This manual describes features that may or may not be on the vehicle because of optional equipment that was not purchased on the vehicle, model variants, country specifications, features/applications that may not be available in your region, or changes subsequent to the printing of this owner’s manual.

Refer to the purchase documentation relating to your specific vehicle to confirm the features.

Keep this manual in the vehicle for quick reference.

Canadian Vehicle Owners

A French language manual can be obtained from your dealer, at www.helminc.com, or from:

Propriétaires Canadiens

On peut obtenir un exemplaire de ce guide en français auprès du concessionnaire ou à l'adresse suivante:

Helm, Incorporated
Attention: Customer Service
47911 Halyard Drive
Plymouth, MI 48170
USA

©2020 General Motors LLC. All Rights Reserved.

Using this Manual

To quickly locate information about the vehicle, use the Index in the back of the manual. It is an alphabetical list of what is in the manual and the page number where it can be found.

Danger, Warning, and Caution

Warning messages found on vehicle labels and in this manual describe hazards and what to do to avoid or reduce them.

⚠ Danger

Danger indicates a hazard with a high level of risk which will result in serious injury or death.

⚠ Warning

Warning indicates a hazard that could result in injury or death.

Caution

Caution indicates a hazard that could result in property or vehicle damage.

A circle with a slash through it is a safety symbol which means “Do not,” “Do not do this,” or “Do not let this happen.”

Symbols

The vehicle has components and labels that use symbols instead of text. Symbols are shown along with the text describing the operation or information relating to a specific component, control, message, gauge, or indicator.

: Shown when the owner’s manual has additional instructions or information.

: Shown when the service manual has additional instructions or information.

: Shown when there is more information on another page — “see page.”

Vehicle Symbol Chart

Here are some additional symbols that may be found on the vehicle and what they mean. See the features in this manual for information.

: Air Conditioning System

: Air Conditioning Refrigerant Oil

: Airbag Readiness Light

: Antilock Brake System (ABS)

: Brake System Warning Light

: Dispose of Used Components Properly

: Do Not Apply High Pressure Water

: Engine Coolant Temperature

: Flame/Fire Prohibited

: Flammable

: Forward Collision Alert

: Fuse Block Cover Lock Location

: Fuses

: ISOFIX/LATCH System Child Restraints

: Keep Fuse Block Covers Properly Installed

: Lane Change Alert

: Lane Departure Warning

: Lane Keep Assist

: Malfunction Indicator Lamp

: Oil Pressure

: Park Assist

: Pedestrian Ahead Indicator

: Power

: Rear Cross Traffic Alert

: Registered Technician

: Remote Vehicle Start

: Risk of Electrical Fire

: Seat Belt Reminders

: Side Blind Zone Alert

: Stop/Start

: Tire Pressure Monitor

: Traction Control/StabiliTrak/ Electronic Stability Control (ESC)

: Under Pressure

: Vehicle Ahead Indicator

Instrument Panel Overview

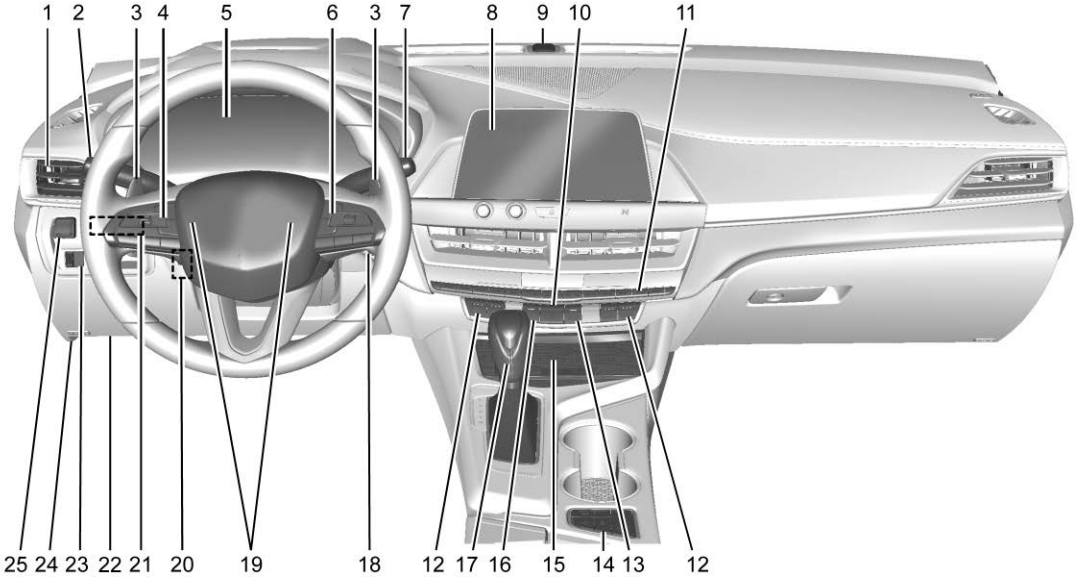

1. *Air Vents* ⇨ *200*.
2. *Exterior Lamp Controls* ⇨ *126*.

   Turn Signal Lever. See *Turn and Lane-Change Signals* ⇨ *129*.
3. Tap Shift Controls (If Equipped). See *Manual Mode (Electronic Shifter)* ⇨ *235* or *Manual Mode (Mechanical Shifter)* ⇨ *234*.
4. *Cruise Control* ⇨ *248*.

   Adaptive Cruise Control (Advanced) ⇨ *251* (If Equipped).

   Forward Collision Alert (FCA) System ⇨ *283* (If Equipped).

   Heated Steering Wheel ⇨ *82* (If Equipped).
5. *Instrument Cluster (Base Level)* ⇨ *88* or *Instrument Cluster (Uplevel)* ⇨ *90*.

   Driver Information Center (DIC) Display. See *Driver Information Center (DIC) (Base Level)* ⇨ *107* or *Driver Information Center (DIC) (Uplevel)* ⇨ *110*.
6. *Steering Wheel Controls* ⇨ *137* (If Equipped).
7. *Windshield Wiper/Washer* ⇨ *82*.
8. Infotainment. See *Overview* ⇨ *135*.
9. Light Sensor. See *Automatic Headlamp System* ⇨ *128*.
10. *Hazard Warning Flashers* ⇨ *129*.
11. *Dual Automatic Climate Control System* ⇨ *196*.
12. *Heated and Ventilated Front Seats* ⇨ *37* (If Equipped).
13. *Lane Keep Assist (LKA)* ⇨ *291* (If Equipped).
14. *Traction Control/Electronic Stability Control* ⇨ *239*.

    Stop/Start Disable Switch. See *Stop/Start System* ⇨ *221*.

    Automatic Vehicle Hold (AVH) ⇨ *239*.

    MODE Button or ∧ /∨ Button (V-Series Only). See *Driver Mode Control* ⇨ *241*.
15. Wireless Charging Pad (If Equipped) (Out of View). See *Wireless Charging* ⇨ *85*.
16. Park Assist Button. See *Assistance Systems for Parking or Backing* ⇨ *277*.
17. Shift Lever. See *Automatic Transmission (Mechanical Shifter)* ⇨ *227* or *Automatic Transmission (Electronic Shifter)* ⇨ *229*.
18. ENGINE START/STOP Button. See *Ignition Positions* ⇨ *219*.
19. *Horn* ⇨ *82*.
20. *Steering Wheel Adjustment* ⇨ *82*.
21. *Head-Up Display (HUD)* ⇨ *112* (If Equipped).
22. Hood Release (Out of View). See *Hood* ⇨ *307*.
23. *Instrument Panel Illumination Control* ⇨ *130*.
24. Data Link Connector (DLC) (Out of View). See *Malfunction Indicator Lamp (Check Engine Light)* ⇨ *97*.
25. *Electric Parking Brake* ⇨ *237* (If Equipped).

Keys, Doors, and Windows

Keys and Locks

Keys 6
Remote Keyless Entry (RKE) System 7
Remote Keyless Entry (RKE) System Operation 7
Remote Vehicle Start 13
Door Locks 15
Power Door Locks 17
Delayed Locking 17
Automatic Door Locks 17
Lockout Protection 18
Safety Locks 18

Doors

Trunk 19

Vehicle Security

Vehicle Security 20
Vehicle Alarm System 20
Immobilizer 22
Immobilizer Operation 23

Exterior Mirrors

Convex Mirrors 23
Power Mirrors 24
Folding Mirrors 24
Heated Mirrors 25
Automatic Dimming Mirror 25
Reverse Tilt Mirrors 25

Interior Mirrors

Interior Rearview Mirrors 26
Manual Rearview Mirror 26
Automatic Dimming Rearview Mirror 26

Windows

Windows 26
Power Windows 26
Sun Visors 28

Roof

Sunroof 28

Keys and Locks

Keys

⚠ Warning

Leaving children in a vehicle with a remote key is dangerous and children or others could be seriously injured or killed. They could operate the power windows or other controls or make the vehicle move. The windows will function with the remote key in the vehicle, and children or others could be caught in the path of a closing window. Do not leave children in a vehicle with a remote key.

The mechanical key, inside the remote key, is used for the driver door and glove box.

To remove the mechanical key, press the button on the side of the remote key near the bottom, and pull the mechanical key out. Never pull the mechanical key out without pressing the button.

If it becomes difficult to turn the key, inspect the key blade for debris. Periodically clean with a brush or pick.

See your dealer if a new mechanical key is needed.

Contact Roadside Service if locked out of the vehicle. See *Roadside Service* ⇨ *403*.

With an active OnStar or connected service plan, an OnStar Advisor may remotely unlock the vehicle. See *OnStar Overview* ⇨ *413*.

Remote Keyless Entry (RKE) System

See *Radio Frequency Statement* ⇨ *409*.

If there is a decrease in the remote key operating range:

- Check the distance. The remote key may be too far from the vehicle.
- Check the location. Other vehicles or objects may be blocking the signal.
- Check the remote key battery. See “Battery Replacement” later in this section.
- If the remote key is still not working correctly, see your dealer or a qualified technician for service.

Remote Keyless Entry (RKE) System Operation

The Keyless Access system allows for vehicle entry when the remote key is within 1 m (3 ft). See “Keyless Access Operation” later in this section.

The remote key functions may work up to 60 m (197 ft) away from the vehicle.

Other conditions can impact the performance of the remote key. See *Remote Keyless Entry (RKE) System* ⇨ *7*.

: Press to lock all doors and the fuel door, if equipped. The turn signal indicators may flash and/or the horn may sound on the second press to indicate locking. See *Vehicle Personalization* ⇨ *117*.

Pressing may also arm the alarm system. See *Vehicle Alarm System* ⇨ *20*.

If equipped with remote folding mirrors, pressing on the remote key may fold the mirrors. See *Folding Mirrors* ⇨ *24*.

: Press to unlock the driver door and the fuel door, if equipped. Press again within five seconds to unlock all doors. The remote key can be programmed to unlock all doors on the first button press. See *Vehicle Personalization* ⇨ *117*. When remotely unlocking the vehicle at night, the headlamps and back-up lamps may come on for about 30 seconds to light your approach to the vehicle. The turn signal indicators may flash to indicate unlocking.

Pressing will disarm the alarm system. See *Vehicle Alarm System* ⇨ *20*.

Press and hold for about three seconds to remotely open the windows, if enabled. See *Vehicle Personalization* ⇨ *117*.

If equipped with remote folding mirror, pressing on the remote key may unfold the mirrors. See *Folding Mirrors* ⇨ *24*.

: Press twice to start the engine from outside the vehicle using the remote key. See *Remote Vehicle Start* ⇨ *13*.

: Press and release one time to initiate vehicle locator. The exterior lamps flash and the horn chirps three times. Press and hold for more than three seconds to sound the panic alarm. The horn sounds and the turn signal lamps flash for 30 seconds, or until is pressed again or the vehicle is started.

: Press twice to release the trunk.

Keyless Access Operation

The Keyless Access system lets you lock and unlock the doors and access the trunk without removing the remote key from your pocket, purse, briefcase, etc. The remote key must be within 1 m (3 ft) of the trunk or door being opened. The button is on the outside door handle.

The Keyless Access system can be programmed to be turned off or to unlock all doors on the first door handle press from the driver door. Keyless unlocking can also be turned off. See *Vehicle Personalization* ⇨ *117*.

If equipped with memory seats, remote keys 1 and 2 are linked to seating positions of memory 1 or 2. See *Memory Seats* ⇨ *34*.

Keyless Unlocking/Locking from the Driver Door

When the doors are locked and the remote key is within 1 m (3 ft) of the door handle, pressing the door handle button on the driver door handle will unlock the driver door. If the door handle button is pressed again within five seconds, all passenger doors will unlock.

If equipped with remote folding mirror, pressing the driver door handle button may fold and unfold the mirrors. See *Folding Mirrors* ⇨ *24*.

Driver Door Shown, Passenger Similar

Pressing the door handle button will cause all doors to lock if any of the following occur:

- It has been more than five seconds since the first door handle button press.
- Two door handle button presses were used to unlock all doors.
- Any vehicle door has opened and all doors are now closed.

Keyless Unlocking/Locking from the Passenger Doors

When the doors are locked and the remote key is within 1 m (3 ft) of the door handle, pressing the door handle button on a passenger door handle will unlock all doors. Pressing the door handle button will cause all doors to lock if any of the following occur:

- The door handle button was used to unlock all doors.
- Any vehicle door has opened and all doors are now closed.

Disable/Enable Keyless Unlocking of Exterior Door Handles and Trunk

If equipped, keyless unlocking of the exterior door handles and trunk can be disabled and enabled.

Disabling Keyless Unlocking:

With the vehicle off, press and hold 🔒 and 🔓 on the remote key at the same time for approximately four seconds. The turn signal lamps will flash four times quickly to indicate access is disabled. Using any exterior handle to unlock the doors or open the trunk will cause the turn signal lamps to flash four times quickly, indicating access is disabled. If disabled, disarm the alarm system before starting the vehicle.

Disabling Keyless Unlocking may also be configured under Vehicle Personalization. See *Vehicle Personalization* ⇨ *117*.

Enabling Keyless Unlocking:

With the vehicle off, press and hold 🔓 and 🔒 on the remote key at the same time for approximately four seconds. The turn signal lamps will flash twice quickly to indicate access is enabled.

Enabling Keyless Unlocking may also be configured under Vehicle Personalization. See *Vehicle Personalization* ⇨ *117*.

Passive (Walkaway) Locking

The Keyless Access system will lock the vehicle several seconds after all doors are closed if the vehicle is off and at least one remote key has been removed or none remain in the vehicle.

If equipped, the fuel door will also lock.

If other electronic devices interfere with the remote key signal, the vehicle may not detect the remote key inside the vehicle. If passive (walkaway) locking is enabled, the doors may lock with the remote key inside the vehicle. Do not leave the remote key in an unattended vehicle.

To customize the doors to automatically lock when exiting the vehicle, see *Vehicle Personalization* ⇨ *117*.

If equipped with remote folding mirror, passive (walkaway) locking may fold the mirrors. See *Folding Mirrors* ⇨ *24*.

Temporary Disable of Passive (Walkaway) Locking

Temporarily disable passive locking by pressing and holding 🔒 on the interior door switch with a door open for at least four seconds, or until three chimes are heard. Passive (walkaway) locking will then remain disabled until the vehicle is turned on.

Remote Key Left In Vehicle Alert

When the vehicle is turned off and a remote key is left in the vehicle, the horn will chirp three times after all doors are closed. To turn on or off see *Vehicle Personalization* ⇨ *117*.

Remote Key No Longer In Vehicle Alert

If the vehicle is on, with a door open, and then all doors are closed, the vehicle will check for a remote key inside. If a remote key is not detected, the Driver Information Center (DIC) will display NO KEY FOUND and the horn will chirp three times.

This occurs only once each time the vehicle is driven. See *Vehicle Personalization* ⇨ *117*.

Keyless Trunk Opening

Press the touch pad on the rear of the trunk above the license plate if the remote key is within 1 m (3 ft).

Mechanical Key Access

To access a vehicle with a weak remote key battery, see *Door Locks* ⇨ *15*.

Programming Remote Keys to the Vehicle

Only remote keys programmed to the vehicle will work. If a remote key is lost or stolen, a replacement can be purchased and programmed through your dealer. The vehicle can be reprogrammed so that lost or stolen remote keys no longer work. Each vehicle can have up to eight remote keys matched to it.

Programming with Recognized Remote Keys

A new key can be programmed to the vehicle when there are two recognized keys.

To program, the vehicle must be in RUN and both the recognized and new remote keys must be with you.

1. Place the two recognized remote keys on the passenger seat.
2. Scroll to the DIC menu to "Remote Key Relearn" and select.

   The DIC displays READY FOR REMOTE #3, 4, 5, etc.

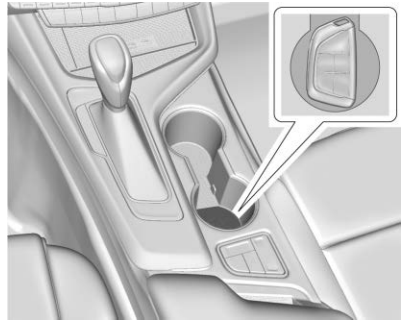

3. Place the new remote key into the rear cupholder.
4. Press ENGINE START/STOP. When the remote key is learned the DIC display will show that it is ready to program the next remote key.
5. Remove the remote key from the rear cupholder and press 🔓 or 🔒 on the remote key.

   To program additional remote keys, repeat Steps 4–5.

   When all additional remote keys are programmed, press and hold ENGINE START/STOP for approximately 12 seconds to exit programming mode.

Programming without Recognized Remote Keys

If two currently recognized remote keys are not available, see your dealer to program new remote keys.

Starting the Vehicle with a Low Remote Key Battery

For improved vehicle security, the remote key is equipped with a motion sensor. When starting the vehicle, if the remote key has been idle for a while, the DIC may display KEY IN SLEEP MODE, MOVE KEY, THEN START. Move the remote key slightly and try starting the vehicle. When starting the vehicle, if the remote key battery is depleted or there is signal interference, the DIC may display NO KEY FOUND, REPLACE BATTERY IN KEY or NO REMOTE KEY WAS DETECTED PLACE KEY IN KEY

POCKET THEN START YOUR VEHICLE, follow the steps shown below:

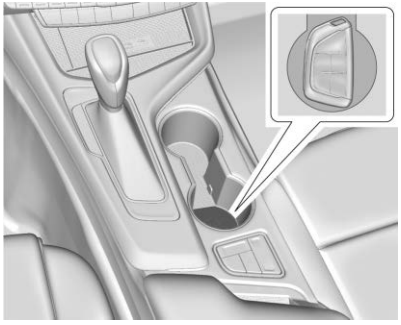

1. Place the remote key into the rear cupholder.
2. With the vehicle in P (Park) or N (Neutral) press the brake pedal and ENGINE START/STOP.

   Replace the remote key battery as soon as possible.

Battery Replacement

⚠ Warning

Never allow children to play with the remote key. The remote key contains a small battery, which can be a choking hazard. If swallowed, internal burns can occur, resulting in severe injury or death. Seek medical attention immediately if a battery is swallowed.

⚠ Warning

To avoid personal injury, do not touch metal surfaces on the remote key when it has been exposed to extreme heat. These surfaces can be hot to the touch at temperatures above 59 °C (138 °F).

Caution

When replacing the battery, do not touch any of the circuitry on the remote key. Static from your body could damage the remote key.

Caution

Always replace the battery with the correct type. Replacing the battery with an incorrect type could potentially create a risk of battery explosion. Dispose of used batteries according to instructions and local laws. Do not attempt to burn, crush, or cut the used battery, and avoid exposing the battery to environments with extremely low air pressures or high temperatures.

Replace the battery if the DIC displays REPLACE BATTERY IN KEY.

1. Press the button on the side of the remote key near the bottom and pull the mechanical key out. Never pull the mechanical key out without pressing the button.

2. Use the mechanical key blade in the slot to remove the battery cover by hand.

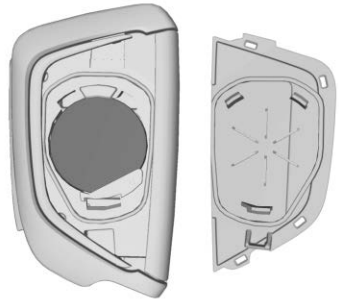

3. Remove the seal by pulling on the tab to access the battery.
4. Remove the old battery. Do not use a metal object.
5. Insert the new battery, negative side facing down. Replace with a CR2450 or equivalent battery.
6. Replace the seal, pushing it into the groove around the battery compartment.
7. Replace the battery cover by snapping it back into the remote key.
8. Reinsert the mechanical key.

Remote Vehicle Start

This feature allows the engine to be started from outside the vehicle.

: This button on the remote key is for remote start.

The climate control system will use the previous settings during a remote start. The rear window defogger may come on during remote start based on cold ambient conditions. The rear defog indicator light does not come on during remote start.

If equipped, the heated and ventilated front seats may also come on when the vehicle personalization setting is enabled. See *Heated and Ventilated Front Seats* ⇨ *37*.

If equipped with a remote start heated steering wheel, it may come on during a remote start. See *Heated Steering Wheel* ⇨ *82*.

Laws in some local communities may restrict the use of remote starters. For example, some laws may require a person using remote start to have the vehicle in view. Check local regulations for any requirements.

If your vehicle is low on fuel, do not use the remote start feature. The vehicle may run out of fuel.

The remote key range may be shorter while the vehicle is running.

Other conditions can affect the performance of the remote key. See *Remote Keyless Entry (RKE) System* ⇨ *7*.

You are allowed multiple starts totaling 30 minutes of engine run time. The maximum run time of a single start is 15 minutes, and it will shut off automatically. You could do three 10 minute starts if you manually shut off after 10 minutes. The last 10 minute start would shut off automatically as your total 30 minutes will have been used.

Starting the Engine Using Remote Start

1. Press (x2) twice on the remote key. The turn signal lamps will flash. The lamps flash to confirm the request to remote start the vehicle has been received. During the remote start, the doors will be locked and the parking lamps will remain on as long as the engine is running.
2. The engine will shut off after 15 minutes or after the remainder of the 30 minute total running time is used, unless you stop the remote start before engine running has completed or the vehicle is turned on.
3. After entering the vehicle during a remote start, press the brake and ENGINE START/STOP with the remote key in the vehicle to drive the vehicle.

Additional Engine Run Time

Remote start can be used for up to 30 minutes of total engine run time.

After two remote starts of 15 minutes, or multiple shorter time starts totaling 30 minutes have been used, the vehicle must be started normally before the remote start can be used again.

Canceling a Remote Start

To cancel a remote start, do any of the following:

- Press (x2). The parking lamps will turn off.
- Turn on the hazard warning flashers.
- Turn the vehicle on and then back off.

Conditions in Which Remote Start Will Not Work

The remote start will not operate if any of the following occur:

- The ignition is in any mode other than off.
- A remote key is in the vehicle.
- The hood is not closed.
- The hazard warning flashers are on.
- There is an emission control system malfunction.
- The engine coolant temperature is too high.
- The oil pressure is low.
- The 30 minutes of engine run time have been used.
- The vehicle is not in P (Park).

Door Locks

⚠ Warning

Unlocked doors can be dangerous.

- Passengers, especially children, can easily open the doors and fall out of a moving vehicle. The doors can be unlocked and opened while the vehicle is moving. The chance of being thrown out of the vehicle in a crash is increased if the doors are not locked. So, all passengers should wear seat belts properly and the doors should be locked whenever the vehicle is driven.
- Young children who get into unlocked vehicles may be unable to get out. A child can be overcome by extreme heat and can suffer permanent injuries or even death from heat stroke. Always lock the vehicle whenever leaving it.
- Outsiders can easily enter through an unlocked door when you slow down or stop the

(Continued)

Warning (Continued)

vehicle. Locking the doors can help prevent this from happening.

To lock or unlock the doors from outside the vehicle:

- Press 🔒 or 🔓 on the remote key. See *Remote Keyless Entry (RKE) System Operation* ⇨ *7*.
- Use the mechanical key in the driver door. The key lock cylinder is covered with a cap.

  See “Driver Door Key Lock Cylinder Access (In Case of Dead Battery)” later in this section.

To lock or unlock the doors from inside the vehicle:

- Press 🔒 or 🔓 on the power door lock switch.
- Pull once on the door handle to unlock the door and again to open the door.

Keyless Access

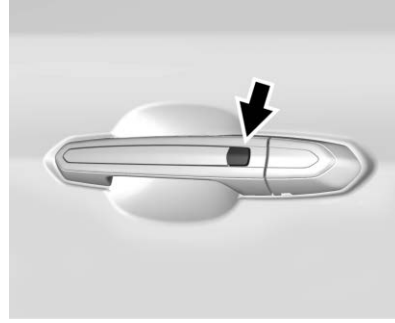

When the doors are locked and the remote key is within 1 m (3 ft) of the driver door handle, press the lock/unlock button. When unlocking from the driver door, the first press unlocks that door; press again within five seconds to unlock the passenger door and the trunk. See *Remote Keyless Entry (RKE) System Operation* ⇨ *7*.

Driver Door Key Lock Cylinder Access (In Case of Dead Battery)

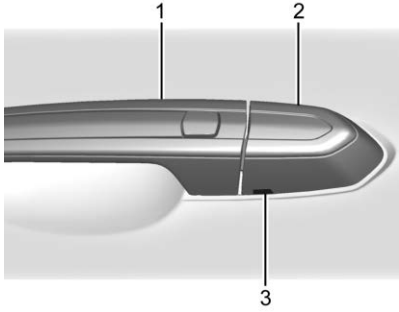

To access the driver door key lock cylinder:

1. Pull the door handle (1) to the open position and hold it open until the cap removal is complete.
2. Insert the mechanical key into the slot (3) on the bottom of the cap (2) and lift the mechanical key upward.
3. Move the cap (2) rearward and remove.
4. Use the mechanical key in the cylinder.

To replace the cap:

1. Pull the door handle (1) to the open position and hold it open until the cap installation is complete.

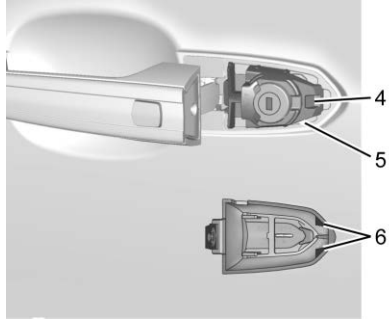

2. Insert the two tabs (6) at the back of the cap between the seal (5) and the metal base (4).

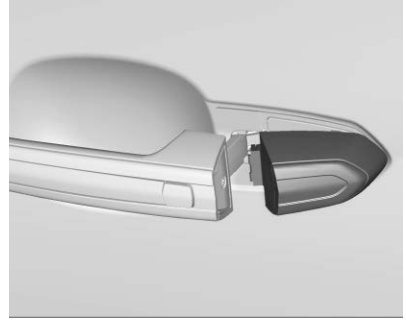

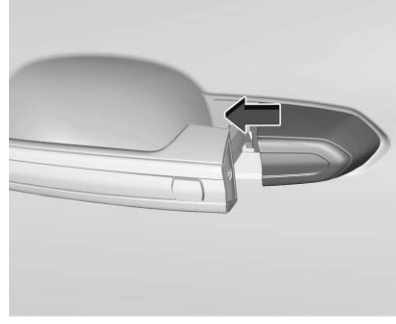

3. Slide the cap forward and press the forward edge to install the cap in place.

4. Release the door handle.
5. Check that the cap is secure.

Free-Turning Locks

The door key lock cylinder turns freely when either the wrong mechanical key is used, or the correct mechanical key is not fully inserted. The free-turning door lock feature prevents the lock from being forced open. To reset the lock, turn it to the vertical position with the correct mechanical key fully inserted. Remove the mechanical key and insert it again. If this does not reset the lock, turn the mechanical key halfway around in the cylinder and repeat the reset procedure.

Power Door Locks

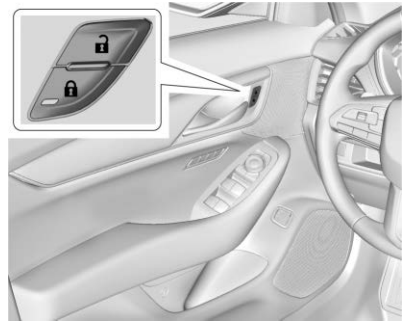

🔒 **:** Press to lock the doors. The indicator light in the switch will illuminate when locked.

🔓 **:** Press to unlock the doors.

If equipped, the fuel door is also locked or unlocked using these features.

Delayed Locking

This feature delays the actual locking of the doors until five seconds after all doors are closed.

When 🔒 is pressed on the power door lock switch with the door open, a chime will sound three times indicating that delayed locking is active.

The doors will then lock automatically five seconds after all doors are closed. If a door is reopened before five seconds have elapsed, the five-second timer will reset once all the doors are closed again.

Press 🔒 on the door lock switch again, or press 🔒 on the key, to override this feature and lock the doors immediately.

Delayed locking can be programmed. See *Vehicle Personalization* ⇨ *117*.

Automatic Door Locks

The doors will lock automatically when all doors are closed, the ignition is on, and the vehicle is shifted out of P (Park).

If a vehicle door is unlocked, and then opened and closed, the doors will lock either when your foot is removed from the brake or the vehicle speed becomes faster than 13 km/h (8 mph).

To unlock the doors:

- Press on the power door lock switch.
- Shift the transmission into P (Park).

Automatic door locking cannot be disabled. Automatic door unlocking can be programmed. See *Vehicle Personalization* ⇨ *117*.

Lockout Protection

If the vehicle is on or in ACC/ACCESSORY and the power door lock switch is pressed with the driver door open, all the doors will lock and only the driver door will unlock.

If the vehicle is off and locking is requested while a door is open, when all doors are closed the vehicle will check for keys inside. If any remote key programmed to the vehicle is detected and the number of keys inside has not reduced, the driver door will unlock and the horn will chirp three times.

Lockout Protection can be manually overridden with the driver door open by pressing and holding on the power door lock switch.

Safety Locks

With Folding Mirrors

Without Folding Mirrors

The rear door safety locks prevent passengers from opening the rear doors from inside the vehicle.

Press to activate the safety locks on the rear doors. The indicator light in the switch will illuminate when activated.

The rear door power windows are also disabled. See *Power Windows* ⇨ *26*.

Press again to deactivate the safety locks.

If an inside rear door handle is being pulled at the same time the safety lock is deactivated, only that door will remain locked and the indicator light may flash. Release the handle, then press the safety lock twice to deactivate the safety locks.

Doors

Trunk

⚠ Warning

Exhaust gases can enter the vehicle if it is driven with the liftgate or trunk/hatch open, or with any objects that pass through the seal between the body and the trunk/hatch or liftgate. Engine exhaust contains carbon monoxide (CO) which cannot be seen or smelled. It can cause unconsciousness and even death.

If the vehicle must be driven with the liftgate or trunk/hatch open:

- Close all of the windows.
- Fully open the air outlets on or under the instrument panel.
- Adjust the climate control system to a setting that brings in only outside air and set the fan speed to the highest setting. See "Climate Control Systems" in the Index.

(Continued)

Warning (Continued)

- If the vehicle is equipped with a power liftgate, disable the power liftgate function.

See *Engine Exhaust* ⇨ *226*.

Manual Trunk

To release the trunk, the vehicle must be off or the shift lever must be in P (Park).

- Press on the driver door.
- Press ×2 twice quickly on the remote key.

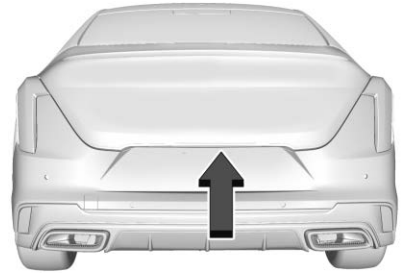

- Press the touch pad on the rear of the trunk above the license plate when all doors are unlocked.

The trunk can be opened while the vehicle is locked by pressing the touch pad above the license plate while the remote key is within 1 m (3 ft) of the rear of the vehicle. See *Remote Keyless Entry (RKE) System Operation* ⇨ *7*.

Close the trunk by pulling on the handle. Do not use the handle as a tie-down. Do not press the touch pad while closing the trunk; this will cause the trunk lid to be unlatched.

The trunk has an electric latch. If the vehicle has lost power or the battery is disconnected, the trunk will not open. If this happens, use the emergency trunk release handle.

Emergency Trunk Release Handle

Caution

Do not use the emergency trunk release handle as a tie-down or anchor point when securing items in the trunk as it could damage the handle.

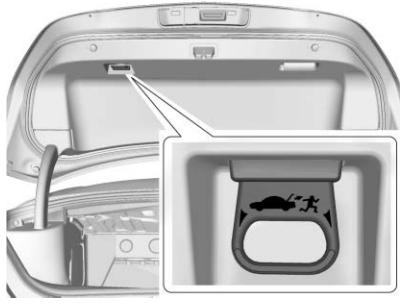

There is a glow-in-the-dark emergency trunk release handle on the trunk lid. This handle will glow following exposure to light. Pull the release handle to open the trunk from the inside.

Vehicle Security

This vehicle has theft-deterrent features; however, they do not make the vehicle impossible to steal.

Vehicle Alarm System

This vehicle has an anti-theft alarm system.

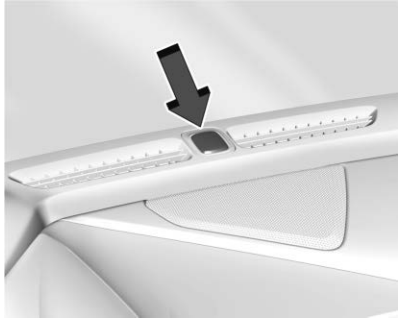

The indicator light, on the instrument panel near the windshield, indicates the status of the system.

Off : Alarm system is disarmed.

On Solid : Vehicle is secured during the delay to arm the system.

Fast Flash : Vehicle is unsecured. A door, the hood, or the trunk is open.

Slow Flash : Alarm system is armed.

Arming the Alarm System

1. Turn off the vehicle.
2. Lock the vehicle in one of three ways:
   - Use the remote key.
   - Use the Keyless Access system.
   - With a door open, press 🔒 on the interior of the door.
3. After 30 seconds the alarm system will arm, and the indicator light will begin to slowly flash indicating the alarm system is operating. Pressing 🔒 on the remote key a second time will bypass the 30-second delay and immediately arm the alarm system.

The vehicle alarm system will not arm if the doors are locked with the mechanical key.

If the driver door is opened without first unlocking with the remote key, the horn will chirp and the lights will flash to indicate pre-alarm. If the vehicle is not started, or the door is not unlocked by pressing 🔓 on the remote key during the 10-second pre-alarm, the alarm will be activated.

The alarm will also be activated if a passenger door, the trunk, or the hood is opened without first disarming the system. When the alarm is activated, the turn signals flash and the horn sounds for about 30 seconds. The alarm system will then re-arm to monitor the next unauthorized event.

Disarming the Alarm System

To disarm the alarm system or turn off the alarm if it has been activated:

- Press 🔓 on the remote key.
- Unlock the vehicle using the Keyless Access system.
- Start the vehicle.

To avoid setting off the alarm by accident:

- Lock the vehicle after all occupants have left the vehicle and all doors are closed.
- Always unlock a door with the remote key or use the Keyless Access system.

Unlatching the driver door with the mechanical key will not disarm the system or turn off the alarm.

How to Detect a Tamper Condition

If 🔓 is pressed on the remote key and the horn chirps and the lights flash three times, a previous alarm occurred while the system was armed.

If the alarm has been activated, a message will appear on the DIC.

Power Sounder, Inclination Sensor, and Intrusion Sensor

In addition to the standard theft-deterrent system features, this system may also have a power sounder, inclination sensor, and intrusion sensor.

The power sounder provides an audible alarm which is distinct from the vehicle’s horn. It has its own power source, and can sound an alarm if the vehicle’s battery is compromised.

The inclination sensor can set off the alarm if it senses movement of the vehicle, such as when a tire is removed. Make sure the vehicle's alarm is not armed prior to any jacking.

The intrusion sensor monitors the vehicle interior, and can activate the alarm if it senses unauthorized entry into the vehicle's interior. Do not allow passengers or pets to remain in the vehicle when the intrusion sensor is activated.

Before arming the theft-deterrent system and activating the intrusion sensor:

- Make sure all doors and windows are completely closed.
- Secure any loose items such as sun glasses.
- Make sure there are no obstructions blocking the sensors in the front overhead console.

Inclination and Intrusion Sensor Disable Switch

It is recommended that the intrusion and inclination sensor be deactivated if pets are left in the vehicle or the vehicle is being transported. With the vehicle turned off, press in the front overhead console. The indicator light will come on momentarily, indicating that these sensors have been disabled for the next alarm system arming cycle.

Immobilizer

See *Radio Frequency Statement* ⇨ *409*.

Immobilizer Operation

This vehicle has a passive theft-deterrent system.

The system does not have to be manually armed or disarmed.

The vehicle is automatically immobilized when the vehicle is turned off.

The immobilization system is disarmed when the ignition is turned on or to ACC/ACCESSORY and a valid remote key is present in the vehicle.

The security light, in the instrument cluster, comes on if there is a problem with arming or disarming the theft-deterrent system.

The system has one or more remote keys matched to an immobilizer control unit in the vehicle. Only a correctly matched remote key will start the vehicle. If the remote key is ever damaged, you may not be able to start your vehicle.

When trying to start the vehicle, the security light may come on briefly.

If the engine does not start and the security light stays on, there is a problem with the system. Turn the ignition off and try again.

If the vehicle will not change ignition modes (ACC/ACCESSORY, on, off), and the remote key appears to be undamaged, try another remote key. Or, you may try placing the remote key in the backup location. See *Remote Keyless Entry (RKE) System Operation* ⇨ *7*.

If the ignition modes will not change with the other remote key or in the backup location, the vehicle needs service. If the ignition does change modes, the first remote key may be faulty. See your dealer.

It is possible for the immobilizer system to learn new or replacement remote keys. Up to eight remote keys can be programmed for the vehicle. To program additional remote keys, see "Programming Remote Keys to the Vehicle" under *Remote Keyless Entry (RKE) System Operation* ⇨ *7*.

Do not leave the remote key or device that disarms or deactivates the theft-deterrent system in the vehicle.

Exterior Mirrors

Convex Mirrors

⚠ Warning

A convex mirror can make things, like other vehicles, look farther away than they really are. If you cut too sharply into the right lane, you could hit a vehicle on the right. Check the inside mirror or glance over your shoulder before changing lanes.

The passenger side mirror is convex shaped. A convex mirror's surface is curved so more can be seen from the driver seat.

Power Mirrors

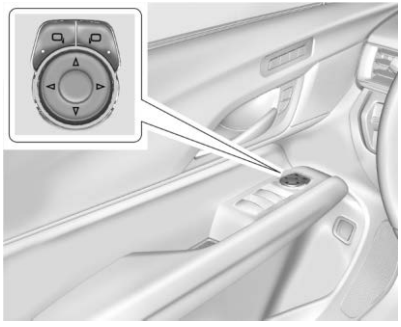

To adjust each mirror:

1. Press ⊟ or ⊟ to select the driver or passenger side mirror. The indicator light will illuminate.
2. Press the arrows on the control pad to move the mirror in the desired direction.
3. Adjust each outside mirror so that a little of the vehicle and the area behind it can be seen.
4. Press ⊟ or ⊟ again to deselect the mirror.

Memory Mirrors

The vehicle may have memory mirrors. See *Memory Seats* ⇨ *34*.

Side Blind Zone Alert (SBZA)

The vehicle may have SBZA. See *Side Blind Zone Alert (SBZA)* ⇨ *289*.

Lane Change Alert (LCA)

The vehicle may have LCA. See *Lane Change Alert (LCA)* ⇨ *289*.

Folding Mirrors

Manual Folding Mirrors

The mirrors can be folded inward toward the vehicle to prevent damage when going through an automatic car wash. Push the mirror outward to return it to the original position.

Power Folding Mirrors

If equipped, press ⊟ to power fold the mirrors. Press ⊟ again to unfold.

The outside mirrors may automatically unfold when the vehicle is driven above 20 km/h (12 mph), but may be folded with the power folding mirror switch. If the vehicle speed is driven above 40 km/h (25 mph), they may automatically unfold and may not be refolded with the power folding mirror switch.

Resetting the Power Folding Mirrors

Reset the power folding mirrors if:

- The mirrors are accidentally obstructed while folding.
- They are accidentally manually folded/unfolded.
- The mirrors do not stay in the unfolded position.
- The mirrors vibrate at normal driving speeds.

Fold and unfold the mirrors one time using the mirror controls to reset them to their normal position. A noise may be heard during the resetting of the power folding mirrors. This sound is normal after a manual folding operation.

Remote Mirror Folding

If equipped with power folding mirrors, and the mirrors have been folded with the power folding mirror switch, they may not be automatically unfolded by the Remote Mirror Folding feature.

If equipped with power folding mirrors, and the mirrors have not been folded with the power folding mirror switch and the vehicle is in P (Park), they may be automatically folded/unfolded as follows:

1. If doors are locked by pressing 🔒 on the remote key, the mirrors will fold. If doors are unlocked by pressing 🔓 on the remote key, the mirrors will unfold. See *Remote Keyless Entry (RKE) System Operation* ⇨ *7*.
2. If doors are locked by pressing the door handle button, the mirrors will fold. If doors are unlocked by pressing the door handle button, the mirrors will unfold. See "Keyless Unlocking/Locking from the Driver Door" in *Remote Keyless Entry (RKE) System Operation* ⇨ *7*.
3. If passive locking is enabled and doors are locked by that feature, the mirrors will fold. See "Passive Locking" in *Remote Keyless Entry (RKE) System Operation* ⇨ *7*.

Heated Mirrors

REAR : The rear window defogger also heats the outside mirrors.

See *Dual Automatic Climate Control System* ⇨ *196*.

Automatic Dimming Mirror

If the vehicle has the automatic dimming mirror, the driver outside mirror automatically adjusts for the glare of headlamps behind you.

Reverse Tilt Mirrors

If equipped with reverse tilt mirrors and memory seats, the passenger and/or driver mirror tilts to a preselected position when the vehicle is in R (Reverse). This allows the curb to be seen when parallel parking. The mirror(s) may move from their tilted position when:

- The vehicle is shifted out of R (Reverse), or remains in R (Reverse) for about 30 seconds.
- The ignition is turned off.
- The vehicle is driven in R (Reverse) above a set speed.

Turn this feature on or off through vehicle personalization. See *Vehicle Personalization* ⇨ *117*.

Interior Mirrors

Interior Rearview Mirrors

Adjust the rearview mirror for a clear view of the area behind the vehicle.

Do not spray glass cleaner directly on the mirror. Use a soft towel dampened with water.

Manual Rearview Mirror

If equipped, push the tab forward for daytime use and pull it rearward for nighttime use to avoid glare of the headlamps from behind.

Automatic Dimming Rearview Mirror

If equipped, automatic dimming reduces the glare of headlamps from behind. The dimming feature comes on when the vehicle is started.

Windows

⚠ Warning

Never leave a child, a helpless adult, or a pet alone in a vehicle, especially with the windows closed in warm or hot weather. They can be overcome by the extreme heat and suffer permanent injuries or even death from heat stroke.

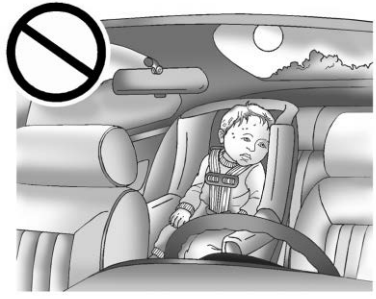

The vehicle aerodynamics are designed to improve fuel economy performance. This may result in a pulsing sound when either rear window is down and the front windows are up. To reduce the sound, open either a front window or the sunroof, if equipped.

Power Windows

⚠ Warning

Children could be seriously injured or killed if caught in the path of a closing window. Never leave the remote key in a vehicle with children. When there are children in the rear seat, use the window lockout switch to prevent operation of the windows. See *Keys* ⇨ *6*.

Power windows work when the ignition is on, in ACC/ACCESSORY, or when Retained Accessory Power (RAP) is active. See *Retained Accessory Power (RAP)* ⇨ *223*.

Using the window switch, press to open or pull to close the window.

The windows may be temporarily disabled if they are used repeatedly within a short time.

Window Lockout

With Folding Mirrors, Without Folding Mirrors Similar

This feature stops the rear passenger window switches from working.

- Press to engage the rear window lockout feature. The indicator light is on when engaged.

  The rear door safety locks will also engage.
- Press again to disengage.

  The rear door safety locks will also disengage.

Window Express Movement

All windows can be opened without holding the window switch. Press the switch down fully and quickly release to express open the window.

If equipped, pull the window switch up fully and quickly release to express close the window. Briefly press or pull the window switch in the same direction to stop that window's express movement.

Window Automatic Reversal System

The express-close feature will reverse window movement if it comes in contact with an object. Extreme cold or ice could cause the window to auto-reverse. The window will operate normally after the object or condition is removed.

Automatic Reversal System Override

⚠ Warning

If automatic reversal system override is active, the window will not reverse automatically. You or others could be injured and the window could be damaged. Before using automatic reversal system override, make sure that all people and obstructions are clear of the window path.

When the engine is on, override the automatic reversal system by pulling and holding the window switch if conditions prevent it from closing.

Programming the Power Windows

Programming may be necessary if the vehicle battery has been disconnected or discharged. If the window is unable to express-up, program each express-close window:

1. Close all doors.
2. Turn the ignition on or to ACC/ACCESSORY.
3. Partially open the window to be programmed. Then close it and continue to pull the switch briefly after the window has fully closed.
4. Open the window and continue to press the switch briefly after the window has fully opened.

Remote Window Operation

If equipped, this feature allows all the windows to be opened remotely.
If enabled in vehicle personalization, press and hold 🔒 on the remote key for about three seconds. See *Vehicle Personalization* ⇨ *117*.

Sun Visors

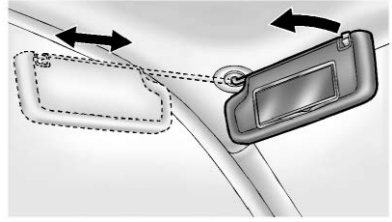

Pull the sun visor down to block glare. Detach the sun visor from the center mount to pivot to the side window and, if equipped, extend along the rod.

Roof

Sunroof

If equipped, the ignition must be on or in ACC/ACCESSORY, or Retained Accessory Power (RAP) must be active to operate the sunroof. See *Ignition Positions* ⇨ *219* and *Retained Accessory Power (RAP)* ⇨ *223*.

While operating in express, movement can be stopped by pressing the switch again.

The sunroof cannot be opened or closed if the vehicle has an electrical failure.

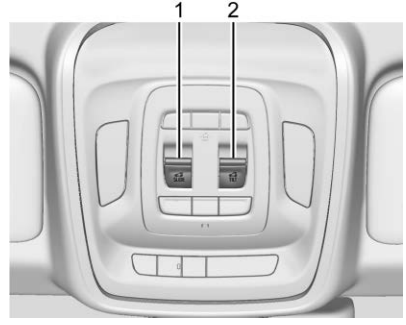

1. SLIDE Switch
2. TILT Switch

Sunroof Operation:

- Press and release SLIDE (1) to express-open to the fully open position.
- Pull and release SLIDE (1) to express-close.
- Press or pull and hold SLIDE (1) to open or close without express. Release SLIDE (1) at the desired position.

Sunroof Vent Operation:

- Press and release TILT (2) to vent the sunroof.
- Pull and release TILT (2) to close the sunroof vent.

This sunroof also has a sunshade, which must be opened and closed manually.

Automatic Reversal System

The sunroof, if equipped, has an automatic reversal system that is only active when the sunroof is operated in express-close mode.

If an object is in the path while express-closing, the reversal system will detect an object, stop, and open the sunroof slightly.

If this condition occurs, attempt to remove the object, then pull and release the switch to express close. If the reversal occurs multiple times, the DIC message OPEN THEN CLOSE SUNROOF will display, and express is disabled. To operate sunroof while express is disabled, the switch must be either pressed or pulled and held.

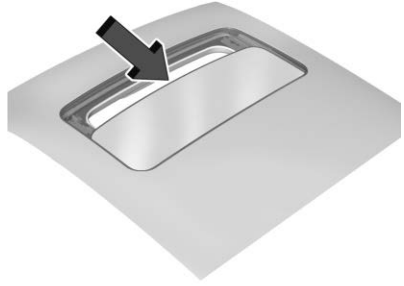

Dirt and debris may collect on the sunroof seal or in the track. This could cause an issue with sunroof operation or noise. It could also plug the water drainage system. Periodically open the sunroof and remove any obstacles or loose debris. Wipe the sunroof seal and roof sealing area using a clean cloth, mild soap, and water. Do not remove grease from the sunroof.

Seats and Restraints

Head Restraints

Head Restraints 31

Front Seats

Power Seat Adjustment 32
Lumbar Adjustment 32
Thigh Support Adjustment 33
Reclining Seatbacks 33
Memory Seats 34
Heated and Ventilated Front Seats 37
Massage 38

Rear Seats

Rear Seats 38

Seat Belts

Seat Belts 40
Buckle To Drive 41
How to Wear Seat Belts Properly 42
Lap-Shoulder Belt 44
Seat Belt Use During Pregnancy 46
Seat Belt Extender 46
Safety System Check 47
Seat Belt Care 47
Replacing Seat Belt System Parts after a Crash 47

Airbag System

Airbag System 48
Where Are the Airbags? 49
When Should an Airbag Inflate? 51
What Makes an Airbag Inflate? ... 52
How Does an Airbag Restrain? ... 52
What Will You See after an Airbag Inflates? 52
Passenger Sensing System 53
Servicing the Airbag-Equipped Vehicle 57
Adding Equipment to the Airbag-Equipped Vehicle 58
Airbag System Check 58
Replacing Airbag System Parts after a Crash 59

Child Restraints

Older Children 59
Infants and Young Children 60
Child Restraint Systems 63
Where to Put the Restraint 64
Lower Anchors and Tethers for Children (LATCH System) 65
Replacing LATCH System Parts After a Crash 72
Securing Child Restraints (With the Seat Belt in the Rear Seat) 72
Securing Child Restraints (With the Seat Belt in the Front Seat) 74

Head Restraints

⚠ Warning

With head restraints that are not installed and adjusted properly, there is a greater chance that occupants will suffer a neck/spinal injury in a crash. Do not drive until the head restraints for all occupants are installed and adjusted properly.

Adjust the head restraint so that the top of the restraint is at the same height as the top of the occupant's head. This position reduces the chance of a neck injury in a crash.

Front Seats

The vehicle's front seats have adjustable head restraints in the outboard seating positions.

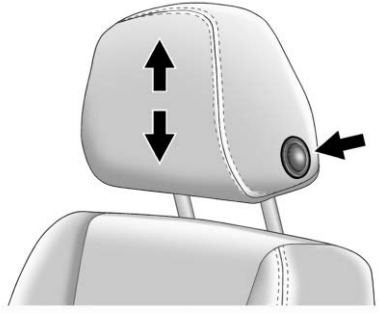

The height of the head restraint can be adjusted.

To raise or lower the head restraint, press the button located on the side of the head restraint, and pull up or push the head restraint down and release the button. Pull and push on the head restraint after the button is released to make sure that it is locked in place.

The front seat outboard head restraints are not removable.

Rear Seats

The vehicle's rear seat has adjustable head restraints in the outboard seating positions.

The height of the head restraint can be adjusted. Pull the head restraint up to raise it. Try to move the head restraint to make sure that it is locked in place.

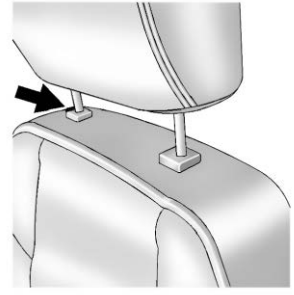

To lower the head restraint, press the button, located on the top of the seatback, and push the head restraint down. Try to move the head restraint after the button is released to make sure that it is locked in place.

Rear outboard head restraints are not removable.

The rear seat outboard head restraints are not intended to be removed.
If removal is required see your dealer for assistance with removal.

Front Seats

Power Seat Adjustment

⚠ Warning

You can lose control of the vehicle if you try to adjust a driver seat while the vehicle is moving. Adjust the driver seat only when the vehicle is not moving.

⚠ Warning

The power seats will work with the ignition off. Children could operate the power seats and be injured. Never leave children alone in the vehicle.

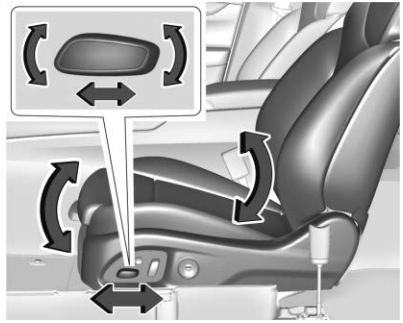

To adjust the seat:

- Move the seat forward or rearward by sliding the control forward or rearward.
- Raise or lower the seat by moving the rear of the control up or down.
- If equipped, raise or lower the front part of the seat cushion by moving the front of the control up or down.

For vehicles not equipped with front cushion tilt, the front part of the control will raise and lower the seat.

If the vehicle is not in P (Park), seat travel may be limited. Release and press the seat switch again to continue movement.

If something has blocked the seat during movement, the movement may stop. Remove the obstruction and try the adjustment again. If movement is still not available, see your dealer.

To adjust the seatback, see *Reclining Seatbacks* ⇨ *33*.

To adjust the lumbar support, see *Lumbar Adjustment* ⇨ *32*.

Some vehicles are equipped with a Safety Alert Seat. This feature activates a vibrating pulse alert in the driver seat to help the driver avoid crashes.

Lumbar Adjustment

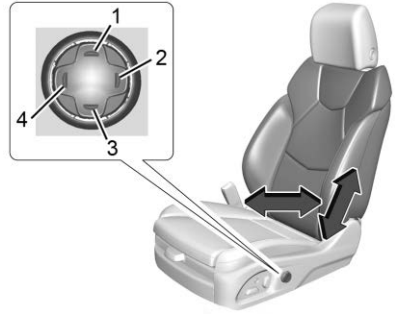

1. To adjust lumbar support, if equipped:
   - If equipped, press Up (1) to move lumbar support upward.
   - Press Rearward (2) to move lumbar support rearward.
   - If equipped, press Down (3) to move lumbar support down.
   - Press Forward (4) to move lumbar support forward.

Uplevel Seat Adjustment

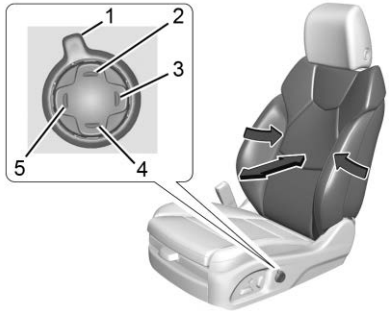

To adjust lumbar support, if equipped:

- Press and release or hold Feature Select (1) to scroll to lumbar support on the infotainment display.
- Press Forward (5) or Rearward (3) to adjust lumbar forward or rearward.
- Press Up (2) or Down (4) to adjust lumbar up or down.

Bolster Support

To adjust bolster support, if equipped:

Press and release or hold Feature Select (1) to scroll to bolster support on the infotainment display. Press Forward (5) or Rearward (3) to adjust bolster support inward or outward.

Thigh Support Adjustment

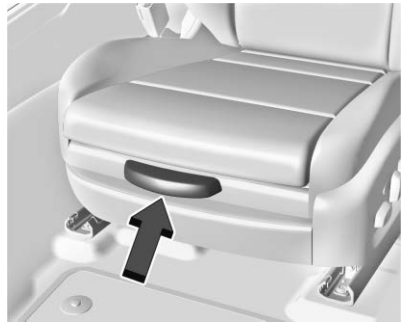

If equipped, pull up on the lever. Then pull or push on the support to lengthen or shorten. Release the lever to lock in place.

Reclining Seatbacks

⚠ Warning

Sitting in a reclined position when the vehicle is in motion can be dangerous. Even when buckled up, the seat belts cannot do their job.

The shoulder belt will not be against your body. Instead, it will be in front of you. In a crash, you could go into it, receiving neck or other injuries.

The lap belt could go up over your abdomen. The belt forces would be there, not at your pelvic bones. This could cause serious internal injuries.

For proper protection when the vehicle is in motion, have the seatback upright. Then sit well back in the seat and wear the seat belt properly.

Do not have a seatback reclined if the vehicle is moving.

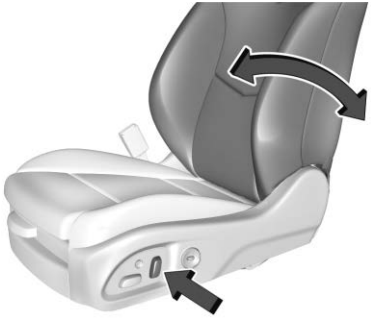

To adjust the seatback:

- Tilt the top of the control rearward to recline.
- Tilt the top of the control forward to raise.

Memory Seats

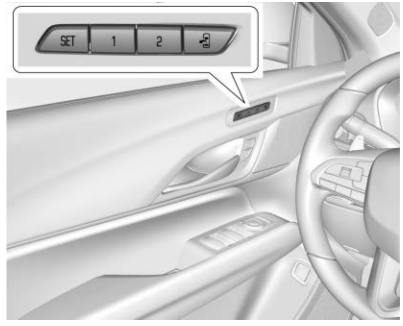

If equipped, memory seats allow two drivers to save and recall their unique seat positions for driving the vehicle, and a shared exit position for getting out of the vehicle. Other feature positions may also be saved, such as power mirrors and power steering wheel, if equipped. Memory positions are linked to remote key 1 or 2 for automatic memory recalls.

Before saving, adjust all available memory feature positions. Turn the vehicle on and then press and release SET; a beep will sound. Then immediately press and hold 1, 2, or (Exit) until two beeps sound. To manually recall these positions, press and hold 1, 2, or until the saved position is reached. Follow the instructions under “Saving Memory Positions.”

The vehicle identifies the current driver’s remote key number (1–8). See *Remote Keyless Entry (RKE) System Operation* ⇨ *7*. Only remote keys 1 and 2 can be used for automatic memory recalls. A Driver Information Center (DIC) welcome message indicating the remote key number may display for the first few ignition cycles following a remote key change. For Seat Entry Memory to work properly, save the positions to the memory button (1 or 2) matching the remote key number displayed in the DIC welcome message. Carry the linked remote key when entering the vehicle.

Vehicle Personalization Settings

- To have the Seat Entry Memory movement begin when the vehicle is started, select the Settings menu, then Vehicle, then Seating Position, and then Seat Entry Memory. Select On or Off. See “Seat Entry Memory” later in this section.
- To begin Seat Exit Memory movement when the vehicle is turned off and the driver door is opened, or when the vehicle is turned off with the driver door already opened, select the Settings menu, then Vehicle, then Seating Position, and then Seat Exit Memory. Select On or Off. See “Seat Exit Memory” later in this section.
- See *Vehicle Personalization* ⇨ *117* for additional setting information.

Identifying Driver Number

To identify the driver number:

1. Move your remote key away from the vehicle.
2. Start the vehicle with another remote key. The DIC should display the driver number for the other remote key. Turn the vehicle off and remove the remote key from the vehicle.
3. Start the vehicle with the initial remote key. The DIC should display the driver number of your remote key.

Saving Memory Positions

Read these instructions completely before saving memory positions.

To save preferred driving positions 1 and 2:

1. Turn the vehicle on or to ACC/ACCESSORY with remote key 1 or 2.

   A DIC welcome message may indicate driver number 1 or 2.
2. Adjust all available memory features to the desired driving position.
3. Press and release SET; a beep will sound.
4. Immediately press and hold the 1 or 2 memory button matching the above DIC welcome message until two beeps sound.

   If too much time passes between releasing SET and pressing 1, the memory position will not be saved and two beeps will not sound. Repeat Steps 3 and 4.

   1 or 2 corresponds to the driver number. See “Identifying Driver Number” previously in this section.
5. Repeat Steps 1–4 for a second driver using 1 or 2.

To save the position for and Seat Exit Memory features, repeat Steps 1–4 using . This saves the position for getting out of the vehicle.

Save preferred memory feature positions to both 1 and 2 if you are the only driver.

Manually Recalling Memory Positions

Press and hold 1, 2, or to recall the previously saved memory positions if you are driver 1 or 2 identified in the DIC welcome message.

To stop Manual Memory recall movement, release 1, 2, or ⊡ or press any of the following controls:

- Power seat
- Memory SET
- Power mirror, with the driver or passenger side mirror selected
- Power steering wheel, if equipped

Manual Memory recall movement for 1, 2, or ⊡ buttons may be initiated and may complete to the saved memory position if the vehicle is in or out of P (Park).

Seat Entry Memory

The vehicle identifies the number of the current driver's remote key (1–8). See *Remote Keyless Entry (RKE) System Operation* ⇨ *7*. If the remote key is 1 or 2, and Seat Entry Memory is enabled in vehicle personalization, the positions saved to the same memory button number 1 or 2 are automatically recalled when the vehicle is turned on. Remote keys 3–8 will not provide automatic memory recalls.

To turn Seat Entry Memory on or off, see "Vehicle Personalization Settings" previously in this section and *Vehicle Personalization* ⇨ *117*.

The shift lever must be in P (Park) to start Seat Entry Memory. Seat Entry Memory recall will complete if the vehicle is shifted out of P (Park) prior to reaching the saved memory position.

To stop Seat Entry Memory recall movement, turn the vehicle off or press any of the following controls:

- Power seat
- Memory SET, 1, 2, or ⊡
- Power mirror, with the driver or passenger side mirror selected
- Power steering wheel, if equipped

If the saved memory seat position does not automatically recall or recalls to the wrong positions, the driver's remote key number (1 or 2) may not match the memory button number that positions were saved to. Try storing the position to the other memory button or try the other remote key.

Seat Exit Memory

Seat Exit Memory is not linked to a remote key. The position saved to ⊡ is used for all drivers. To turn Seat Exit Memory on or off, see "Vehicle Personalization Settings" previously in this section and *Vehicle Personalization* ⇨ *117*.

If turned on, the position saved to ⊡ is automatically recalled when one of the following occurs:

- The vehicle is turned off and the driver door is opened within a short time.
- The vehicle is turned off with the driver door open.

To stop Seat Exit Memory movement, press any of the following memory controls:

- Power seat
- Memory SET, 1, 2, or ⊡
- Power mirror, with the driver or passenger side mirror selected
- Power steering wheel, if equipped

Obstructions

If something has blocked the driver seat while recalling a memory position, the recall may stop. Remove the obstruction and try the recall again. If the memory position still does not recall, see your dealer.

Heated and Ventilated Front Seats

⚠ Warning

If temperature change or pain to the skin cannot be felt, the seat heater may cause burns. To reduce the risk of burns, use care when using the seat heater, especially for long periods of time. Do not place anything on the seat that insulates against heat, such as a blanket, cushion, cover, or similar item. This may cause the seat heater to overheat. An overheated seat heater may cause a burn or may damage the seat.

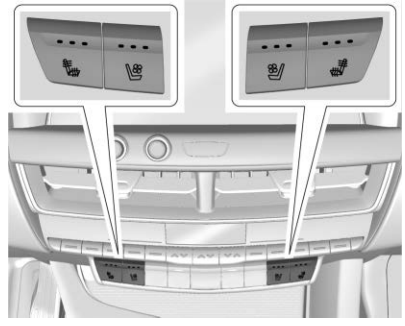

If equipped, the buttons are near the climate controls on the center stack. To operate, the engine must be running.

Press or to heat the driver or passenger seat cushion and seatback.

Press or to ventilate the driver or passenger seat.

Press the button once for the highest setting. With each press of the button, the seat will change to the next lower setting, and then to the off setting. The indicator lights next to the buttons indicate three for the highest setting and one for the lowest. If the front heated seats are on high, the level may automatically be lowered after approximately 30 minutes.

When this feature is off, the heated and ventilated seat symbols on the buttons are white. A ventilated seat has a fan that pulls air through the seat. The air is not cooled. When a heated seat is turned on, the symbol turns red. When a ventilated seat is turned on, the symbol turns blue.

The passenger seat may take longer to heat up.

Auto Heated and Ventilated Seats

If the vehicle is equipped with auto heated or ventilated seats, and the engine is running, this feature will automatically activate the heated or ventilated seats at the level required by the vehicle's interior temperature.

The active high, medium, low, or off heated or ventilated seat level will be indicated by the manual heated and ventilated seat buttons on the center stack. Use the manual heated and ventilated seat buttons on the center stack to turn auto heated or ventilated seats off. If the passenger seat is

unoccupied, the auto heated or ventilated seats feature will not activate that seat. The auto heated and ventilated seats feature can be programmed to always be enabled when the vehicle is on. If equipped with a heated steering wheel, the auto heated steering wheel activation will follow the heated seat auto activation and the heated wheel indicator will follow the state of the steering wheel heat.

Remote Start Heated and Ventilated Seats

If equipped, the heated seats will turn on automatically during a remote start if it is cold outside and the ventilated seats will turn on automatically if it is hot outside. If equipped, the heated steering wheel will turn on automatically during a remote start if it is cold outside. The heated and ventilated seat indicators and heated steering wheel indicator may come on during this operation.

The heated and ventilated seats and heated steering wheel may cancel when the vehicle is started. These features can be manually selected after the ignition is turned on.

The temperature performance of an unoccupied seat may be reduced. This is normal.

The remote start heated or ventilated seats can be enabled or disabled in the vehicle personalization menu. See *Remote Vehicle Start* ⇨ *13* and *Vehicle Personalization* ⇨ *117*.

Massage

If equipped, the ignition must be on to use the massage feature.

To turn the massage feature on or off press the massage control button. When the massage feature is turned off, it will complete the massage cycle before returning to the initial position.

Rear Seats

Rear Seat Reminder

If equipped, the message REAR SEAT REMINDER LOOK IN REAR SEAT displays under certain conditions indicating there may be an item or passenger in the rear seat. Check before exiting the vehicle.

This feature will activate when a second row door is opened while the vehicle is on or up to 10 minutes before the vehicle is turned on. There will be an alert when the vehicle is turned off. The alert does not directly detect objects in the rear seat; instead, under certain conditions, it detects when a rear door is opened and closed, indicating that there may be something in the rear seat.

The feature is active only once each time the vehicle is turned on and off, and will require reactivation by opening and closing the second row doors. There may be an alert even when there is nothing in the rear seat; for example, if a child entered the vehicle through the rear door and left the vehicle without the vehicle being shut off.

The feature can be turned on or off. See *Vehicle Personalization* ⇨ *117*.

Folding the Seatback

Either side of the seatback can be folded for more cargo space. Fold a seatback only when the vehicle is not moving.

Caution

Folding a rear seat with the seat belts still fastened may cause damage to the seat or the seat belts. Always unbuckle the seat belts and return them to their normal stowed position before folding a rear seat.

To fold the seatback:

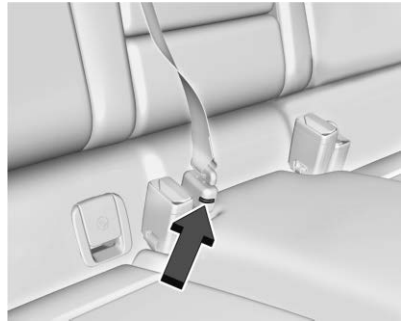

1. Disconnect the rear seat belt mini-latch using a key in the slot on the mini-buckle, and let the belt retract.

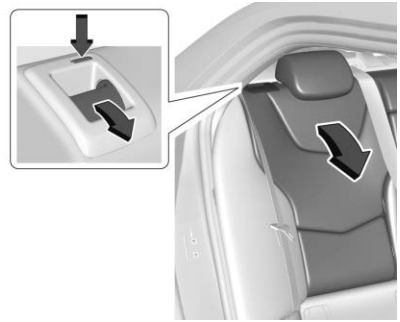

2. Pull the lever on top of the seatback toward you to unlock the seatback.

   A red tab near the seatback lever raises when the seatback is unlocked.
3. Fold the seatback forward.

   Repeat Steps 2 and 3 to fold the other seatback, if desired.

Raising the Seatback

⚠ Warning

If either seatback is not locked, it could move forward in a sudden stop or crash. That could cause injury to the person sitting there. Always push and pull on the seatbacks to be sure they are locked.

⚠ Warning

A seat belt that is improperly routed, not properly attached, or twisted will not provide the protection needed in a crash. The person wearing the belt could be seriously injured. After raising the rear seatback, always check to be sure that the seat belts are properly routed and attached, and are not twisted.

To raise a seatback:

1. Lift the seatback up. Make sure the center seat belt and latch do not get trapped behind the seat. Push the seatback rearward to lock it in place.

   A red tab near the seatback lever retracts when the seatback is locked in place.
2. Push and pull the top of the seatback to be sure it is locked into position.
3. Reconnect the center seat belt mini-latch to the mini-buckle. Do not let the belt twist.
4. Pull on the center seat belt to make sure the mini-latch is secure.
5. Repeat the steps to raise the other seatback, if necessary.

When the seat is not in use, it should be kept in the upright, locked position.

Seat Belts

This section describes how to use seat belts properly, and some things not to do.

⚠ Warning

Do not let anyone ride where a seat belt cannot be worn properly. In a crash, if you or your passenger(s) are not wearing seat belts, injuries can be much worse than if you are wearing seat belts. You can be seriously injured or killed by hitting things inside the vehicle harder or by being ejected from the vehicle. In addition, anyone who is not buckled up can strike other passengers in the vehicle.

It is extremely dangerous to ride in a cargo area, inside or outside of a vehicle. In a collision, passengers riding in these areas are more likely to be seriously injured or killed. Do not allow passengers to ride in any area of the vehicle that is not equipped with seats and seat belts.

Always wear a seat belt, and check that all passenger(s) are restrained properly too.

This vehicle has indicators as a reminder to buckle the seat belts. See *Seat Belt Reminders* ⇨ *95*.

Why Seat Belts Work

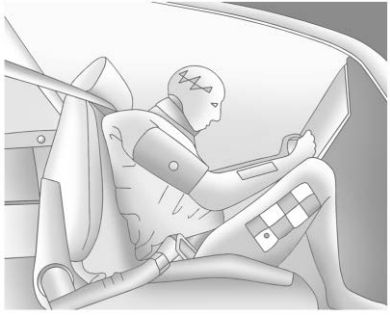

When riding in a vehicle, you travel as fast as the vehicle does. If the vehicle stops suddenly, you keep going until something stops you. It could be the windshield, the instrument panel, or the seat belts!

When you wear a seat belt, you and the vehicle slow down together. There is more time to stop because you stop over a longer distance and, when worn properly, your strongest bones take the forces from the seat belts. That is why wearing seat belts makes such good sense.

Questions and Answers About Seat Belts

Q: Will I be trapped in the vehicle after a crash if I am wearing a seat belt?

A: You *could* be — whether you are wearing a seat belt or not. Your chance of being conscious during and after a crash, so you *can* unbuckle and get out, is *much* greater if you are belted.

Q: If my vehicle has airbags, why should I have to wear seat belts?

A: Airbags are supplemental systems only. They work *with* seat belts — not instead of them. Whether or not an airbag is provided, all occupants still have to buckle up to get the most protection.

Also, in nearly all states and in all Canadian provinces, the law requires wearing seat belts.

Buckle To Drive

If equipped, this feature prevents the vehicle from shifting out of P (Park) when the driver seat belt is not buckled. The Buckle to Drive feature must be turned ON in the infotainment system to work. See *Vehicle Personalization* ⇨ *117* and if equipped, *Teen Driver* ⇨ *184*. If the engine is running, the driver seat belt is not buckled, and the brake pedal is pressed with the vehicle in P (Park), a message displays in the Driver Information Center (DIC). Buckle the driver seat belt to shift out of P (Park). Shifting from P (Park) will be prevented once for each ignition cycle.

For some fleet vehicles, the feature is always ON and it cannot be turned OFF in the infotainment system. Shifting from P (Park) will be prevented each time the above conditions exist.

On some models, Buckle to Drive may also prevent shifting out of P (Park) if a front passenger is unbuckled under similar conditions. A message displays in the DIC. Buckle the front passenger seat belt to shift out of P (Park). This

feature may not allow the vehicle to shift out of P (Park) if an object, such as a briefcase, handbag, grocery bag, laptop, or other electronic device, is on the front passenger seat. If this happens, remove the object from the seat or buckle the seat belt to shift out of P (Park).

If the driver, or on some vehicles, the present front passenger remains unbuckled, the DIC message will turn off after several seconds and the vehicle can be shifted out of P (Park). See “Seat Belts” and “Child Restraints” in the Index for information about the importance of proper restraint use.

If the driver seat belt, and in some vehicles the front passenger seat belt, is unbuckled when driving, the seat belt reminder chime and light(s) will come on. See *Seat Belt Reminders* ⇨ *95*. This feature may not function properly if the airbag readiness light is on. See *Airbag Readiness Light* ⇨ *96*.

How to Wear Seat Belts Properly

Follow these rules for everyone's protection.

There are additional things to know about seat belts and children, including smaller children and infants. If a child will be riding in the vehicle, see *Older Children* ⇨ *59* or *Infants and Young Children* ⇨ *60*. Review and follow the rules for children in addition to the following rules.

It is very important for all occupants to buckle up. Statistics show that unbelted people are hurt more often in crashes than those who are wearing seat belts.

There are important things to know about wearing a seat belt properly.

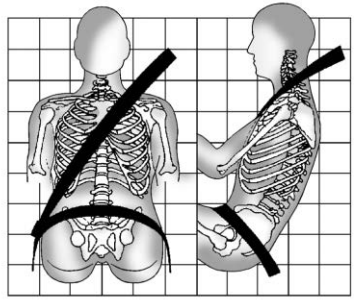

- Sit up straight and always keep your feet on the floor in front of you (if possible).
- Always use the correct buckle for your seating position.
- Wear the lap part of the belt low and snug on the hips, just touching the thighs. In a crash, this applies force to the strong pelvic bones and you would be less likely to slide under the lap belt. If you slid under it, the belt would apply force on your abdomen. This could cause serious or even fatal injuries.
- Wear the shoulder belt over the shoulder and across the chest. These parts of the body are best able to take belt restraining forces. The shoulder belt locks if there is a sudden stop or crash.

⚠ Warning

You can be seriously injured, or even killed, by not wearing your seat belt properly.

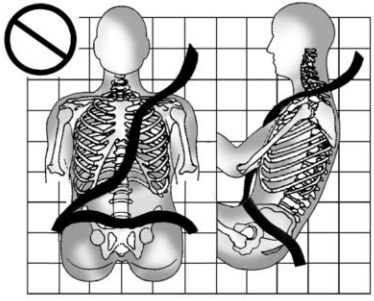

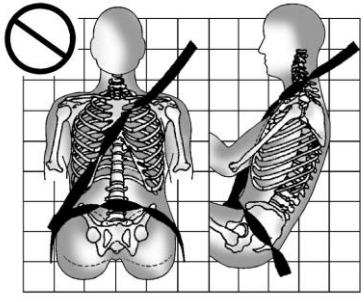

Never allow the lap or shoulder belt to become loose or twisted.

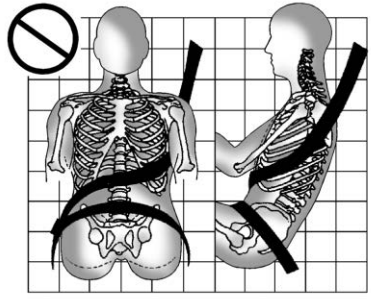

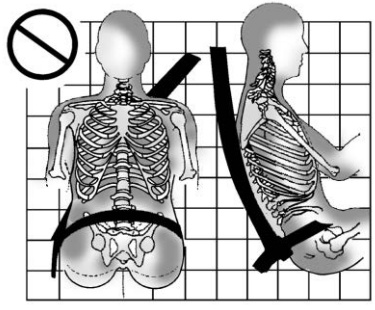

Never wear the shoulder belt under both arms or behind your back.

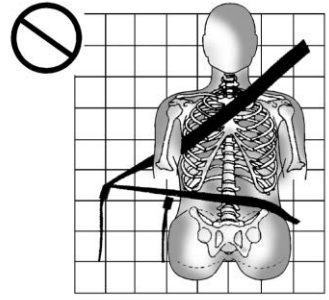

Always use the correct buckle for your seating position.

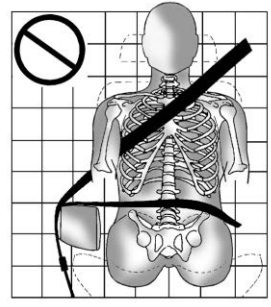

Never route the lap or shoulder belt over an armrest.

⚠ Warning

The seat belt can be pinched if it is routed under plastic trim on the seat, such as trim around the rear seatback folding handle or side airbag. In a crash, pinched seat belts might not be able to provide adequate protection. Never allow seat belts to be routed under plastic trim pieces.

Lap-Shoulder Belt

All seating positions in the vehicle have a lap-shoulder belt.

If you are using a rear seating position with a detachable seat belt and the seat belt is not attached, see *Rear Seats* ⇨ *38* for instructions on reconnecting the seat belt to the mini-buckle.

The following instructions explain how to wear a lap-shoulder belt properly.

1. If the seat has a seat belt guide, the seat belt must be routed through the guide to properly position the shoulder belt. If the seat belt is not routed through the guide, slide the edge of the belt webbing through the opening on the guide. Be sure the belt is not twisted.
2. Adjust the seat, if the seat is adjustable, so you can sit up straight. To see how, see “Seats” in the Index.

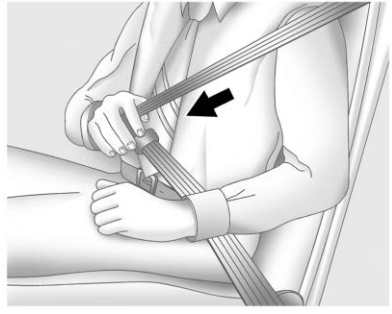

3. Pick up the latch plate and pull the belt across you. Do not let it get twisted.

   The lap-shoulder belt may lock if you pull the belt across you very quickly. If this happens, let the belt go back slightly to unlock it. Then pull the belt across you more slowly.

   If the shoulder portion of a passenger belt is pulled out all the way, the child restraint locking feature may be engaged. See *Child Restraint Systems* ⇨ *63*. If this occurs, let the belt go back all the way and start again. If the locking feature stays engaged after letting the belt go back to stowed position on the seat, move the seat rearward or recline the seat until the shoulder belt retractor lock releases.

   Engaging the child restraint locking feature in the front outboard seating position may affect the passenger sensing system. See *Passenger Sensing System* ⇨ *53*.

If the webbing locks in the latch plate before it reaches the buckle, tilt the latch plate flat to unlock.

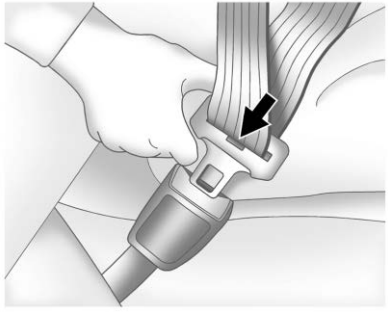

4. Push the latch plate into the buckle until it clicks.

   Pull up on the latch plate to make sure it is secure. If the belt is not long enough, see *Seat Belt Extender* ⇨ *46*.

   Position the release button on the buckle so that the seat belt could be quickly unbuckled if necessary.

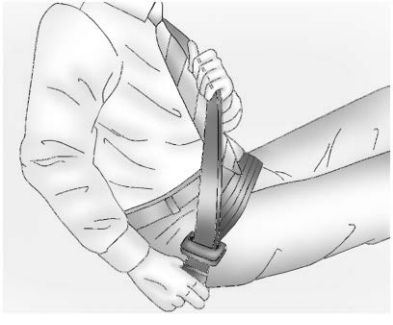

5. To make the lap part tight, pull up on the shoulder belt.

   It may be necessary to pull the webbing firmly, through the adjustable stop, or move the adjustable stop along the webbing toward the outboard floor anchor, to fully tighten the lap belt across the lap.

To unlatch the belt, push the button on the buckle. The belt should return to its stowed position.

Slide the adjustable stop along the webbing toward the guide loop when the seat belt is not in use to prevent the latch plate from rattling against the interior trim.

Always stow the seat belt slowly. If the seat belt webbing returns quickly to the stowed position, the retractor may lock and cannot be pulled out. If this happens, pull the seat belt straight out

firmly to unlock the webbing, and then release it. If the webbing is still locked in the retractor, see your dealer.

Before a door is closed, be sure the seat belt is out of the way. If a door is slammed against a seat belt, damage can occur to both the seat belt and the vehicle.

Seat Belt Pretensioners

This vehicle has seat belt pretensioners for the front outboard occupants. Although the seat belt pretensioners cannot be seen, they are part of the seat belt assembly. They can help tighten the seat belts during the early stages of a moderate to severe frontal, near frontal, or rear crash if the threshold conditions for pretensioner activation are met. Seat belt pretensioners can also help tighten the seat belts in a side crash or a rollover event.

Pretensioners work only once. If the pretensioners activate in a crash, the pretensioners and probably other parts of the vehicle's seat belt system will need to be replaced. See *Replacing Seat Belt System Parts after a Crash* ⇨ *47*.

Do not sit on the outboard seat belt while entering or exiting the vehicle or at any time while sitting in the seat. Sitting on the seat belt can damage the webbing and hardware.

Rear Seat Belt Comfort Guides

Rear seat belt comfort guides may provide added seat belt comfort for older children who have outgrown booster seats and for some adults. When installed on a shoulder belt, the comfort guide positions the shoulder belt away from the neck and head.

Comfort guides are available through your dealer for the rear outboard seating positions. Instructions are included with the guides.

Seat Belt Use During Pregnancy

Seat belts work for everyone, including pregnant women. Like all occupants, they are more likely to be seriously injured if they do not wear seat belts.

A pregnant woman should wear a lap-shoulder belt, and the lap portion should be worn as low as possible, below the rounding, throughout the pregnancy.

The best way to protect the fetus is to protect the mother. When a seat belt is worn properly, it is more likely that the fetus will not be hurt in a crash. For pregnant women, as for anyone, the key to making seat belts effective is wearing them properly.

Seat Belt Extender

If the vehicle's seat belt will fasten around you, you should use it.

But if a seat belt is not long enough, your dealer will order you an extender. When you go in to order it, take the heaviest coat you will wear, so the extender will be long enough for you. To help avoid personal injury, do not let someone else use it, and use it only for the seat it is made to fit. The extender has been designed for adults. Never use it for securing child restraints. For more information on the proper use and fit of seat belt extenders see the instruction sheet that comes with the extender.

Safety System Check

Periodically check the seat belt reminder, seat belts, buckles, latch plates, retractors, shoulder belt height adjusters (if equipped), and seat belt anchorages to make sure they are all in working order. Look for any other loose or damaged seat belt system parts that might keep a seat belt system from performing properly. See your dealer to have it repaired. Torn, frayed, or twisted seat belts may not protect you in a crash. Torn or frayed seat belts can rip apart under impact forces. If a belt is torn or frayed, have it replaced immediately. If a belt is twisted, it may be possible to untwist by reversing the latch plate on the webbing. If the twist cannot be corrected, ask your dealer to fix it.

Make sure the seat belt reminder light is working. See *Seat Belt Reminders* ⇨ *95*.

Keep seat belts clean and dry. See *Seat Belt Care* ⇨ *47*.

Seat Belt Care

Keep belts clean and dry.

Seat belts should be properly cared for and maintained.

Seat belt hardware should be kept dry and free of dust or debris. As necessary, exterior hard surfaces and seat belt webbing may be lightly cleaned with mild soap and water. Ensure there is not excessive dust or debris in the mechanism. If dust or debris exists in the system please see the dealer. Parts may need to be replaced to ensure proper functionality of the system.

⚠ Warning

Do not bleach or dye seat belt webbing. It may severely weaken the webbing. In a crash, they might not be able to provide adequate protection. Clean and rinse seat belt webbing only with mild soap and lukewarm water. Allow the webbing to dry.

Replacing Seat Belt System Parts after a Crash

⚠ Warning

A crash can damage the seat belt system in the vehicle. A damaged seat belt system may not properly protect the person using it, resulting in serious injury or even death in a crash. To help make sure the seat belt systems are working properly after a crash, have them inspected and any necessary replacements made as soon as possible.

After a minor crash, replacement of seat belts may not be necessary. But the seat belt assemblies that were used during any crash may have been stressed or damaged. See your dealer to have the seat belt assemblies inspected or replaced.

New parts and repairs may be necessary even if the seat belt system was not being used at the time of the crash.

Have the seat belt pretensioners checked if the vehicle has been in a crash, or if the airbag readiness light stays on after you start the vehicle or while you are driving. See *Airbag Readiness Light* ⇨ *96*.

Airbag System

The vehicle has the following airbags:

- A frontal airbag for the driver
- A frontal airbag for the front outboard passenger
- A knee airbag for the driver.
- A knee airbag for the front outboard passenger.
- A seat-mounted side impact airbag for the driver
- A seat-mounted side impact airbag for the front outboard passenger
- A roof-rail airbag for the driver and the passenger seated directly behind the driver
- A roof-rail airbag for the front outboard passenger and the passenger seated directly behind the front outboard passenger

All vehicle airbags have the word AIRBAG on the trim or on a label near the deployment opening.

For frontal airbags, the word AIRBAG is on the center of the steering wheel for the driver and on the instrument panel for the front outboard passenger.

For knee airbags, the word AIRBAG is on the lower part of the instrument panel.

For seat-mounted side impact airbags, the word AIRBAG is on the side of the seatback or side of the seat closest to the door.

For roof-rail airbags, the word AIRBAG is on the ceiling or trim.

Airbags are designed to supplement the protection provided by seat belts. Even though today's airbags are also designed to help reduce the risk of injury from the force of an inflating bag, all airbags must inflate very quickly to do their job.

Here are the most important things to know about the airbag system:

⚠ Warning

You can be severely injured or killed in a crash if you are not wearing your seat belt, even with airbags. Airbags are designed to work with seat belts, not replace them. Also, airbags are not designed to inflate in every crash. In some crashes seat belts are the only restraint. See *When Should an Airbag Inflate?* ⇨ *51*.

Wearing your seat belt during a crash helps reduce your chance of hitting things inside the vehicle or being ejected from it. Airbags are “supplemental restraints” to the seat belts. Everyone in the vehicle

(Continued)

Warning (Continued)

should wear a seat belt properly, whether or not there is an airbag for that person.

⚠ Warning

Because airbags inflate with great force and faster than the blink of an eye, anyone who is up against, or very close to, any airbag when it inflates can be seriously injured or killed. Do not sit unnecessarily close to any airbag, as you would be if sitting on the edge of the seat or leaning forward. Seat belts help keep you in position before and during a crash. Always wear a seat belt, even with airbags. The driver should sit as far back as possible while still maintaining control of the vehicle. The seat belts and the front outboard passenger airbags are most effective when you are sitting well back and upright in the seat with both feet on the floor.

(Continued)

Warning (Continued)

Occupants should not lean on or sleep against the door or side windows in seating positions with seat-mounted side impact airbags and/or roof-rail airbags.

⚠ Warning

Children who are up against, or very close to, any airbag when it inflates can be seriously injured or killed. Always secure children properly in the vehicle. To read how, see *Older Children* ⇨ *59* or *Infants and Young Children* ⇨ *60*.

There is an airbag readiness light on the instrument cluster, which shows the airbag symbol.

The system checks the airbag electrical system for malfunctions. The light tells you if there is an electrical problem. See *Airbag Readiness Light* ⇨ *96*.

Where Are the Airbags?

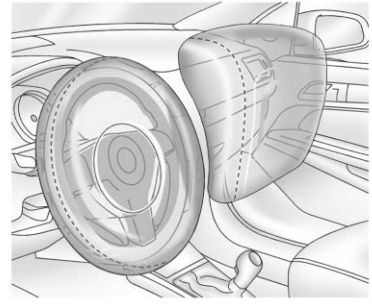

The driver frontal airbag is in the center of the steering wheel.

The front outboard passenger frontal airbag is in the passenger side instrument panel.

The driver knee airbag is below the steering column. The front outboard passenger knee airbag is below the glove box.

Driver Side Shown, Passenger Side Similar

The driver and front outboard passenger seat-mounted side impact airbags are in the side of the seatbacks closest to the door.

Driver Side Shown, Passenger Side Similar

The roof-rail airbags for the driver, front outboard passenger, and second row outboard passengers are in the ceiling above the side windows.

⚠ Warning

If something is between an occupant and an airbag, the airbag might not inflate properly or it might force the object into that person causing severe injury or even death. The path of an inflating airbag must be kept clear. Do not

(Continued)

Warning (Continued)

put anything between an occupant and an airbag, and do not attach or put anything on the steering wheel hub or on or near any other airbag covering.

Do not use seat accessories that block the inflation path of a seat-mounted side impact airbag.

Never secure anything to the roof of a vehicle with roof-rail airbags by routing a rope or tie-down through any door or window opening. If you do, the path of an inflating roof-rail airbag will be blocked.

When Should an Airbag Inflate?

This vehicle is equipped with airbags. See *Airbag System* ⇨ *48*. Airbags are designed to inflate if the impact exceeds the specific airbag system's deployment threshold. Deployment thresholds are used to predict how severe a crash is likely to be in time for the airbags to inflate and help restrain the occupants. The vehicle has electronic sensors that help the airbag system determine the severity of the impact. Deployment thresholds can vary with specific vehicle design.

Frontal airbags are designed to inflate in moderate to severe frontal, or near frontal, crashes to help reduce the potential for severe injuries, mainly to the driver's or front outboard passenger's head and chest.

Whether the frontal airbags will or should inflate is not based primarily on how fast the vehicle is traveling. It depends on what is hit, the direction of the impact, and how quickly the vehicle slows down.

Frontal airbags may inflate at different crash speeds depending on whether the vehicle hits an object straight on or at an angle, and whether the object is fixed or moving, rigid or deformable, narrow or wide.

Frontal airbags are not intended to inflate during vehicle rollovers, in rear impacts, or in many side impacts.

In addition, the vehicle has advanced technology frontal airbags. Advanced technology frontal airbags adjust the restraint according to crash severity.

Knee airbags are designed to inflate in moderate to severe frontal or near frontal impacts. Knee airbags are not designed to inflate during vehicle rollovers, in rear impacts, or in many side impacts.

Seat-mounted side impact airbags are designed to inflate in moderate to severe side crashes depending on the location of the impact. Seat-mounted side impact airbags are not designed to inflate in frontal impacts, near frontal impacts, rollovers, or rear impacts. A seat-mounted side impact airbag is designed to inflate on the side of the vehicle that is struck.

Roof-rail airbags are designed to inflate in moderate to severe side crashes depending on the location of the impact. In addition, these roof-rail airbags are designed to inflate during a rollover or in a severe frontal impact. Roof-rail airbags are not designed to inflate in rear impacts. Both roof-rail airbags will inflate when

either side of the vehicle is struck, if the sensing system predicts that the vehicle is about to roll over on its side, or in a severe frontal impact.

In any particular crash, no one can say whether an airbag should have inflated simply because of the vehicle damage or repair costs.

What Makes an Airbag Inflate?

In a deployment event, the sensing system sends an electrical signal triggering a release of gas from the inflator. Gas from the inflator fills the airbag causing the bag to break out of the cover. The inflator, the airbag, and related hardware are all part of the airbag module.

For airbag locations, see *Where Are the Airbags?* ⇨ *49*.

How Does an Airbag Restrain?

In moderate to severe frontal or near frontal collisions, even belted occupants can contact the steering wheel or the instrument panel. In moderate to severe side collisions, even belted occupants can contact the inside of the vehicle.

Airbags supplement the protection provided by seat belts by distributing the force of the impact more evenly over the occupant's body.

Rollover capable roof-rail airbags are designed to help contain the head and chest of occupants in the outboard seating positions in the first and second rows. The rollover capable roof-rail airbags are designed to help reduce the risk of full or partial ejection in rollover events, although no system can prevent all such ejections.

But airbags would not help in many types of collisions, primarily because the occupant's motion is not toward those airbags. See *When Should an Airbag Inflate?* ⇨ *51*.

Airbags should never be regarded as anything more than a supplement to seat belts.

What Will You See after an Airbag Inflates?

After frontal, knee, and seat-mounted side impact airbags inflate, they quickly deflate, so quickly that some people may not even realize the airbags inflated. Roof-rail airbags may still be at least partially inflated for some time after they inflate. Some components of the airbag module may be hot for several minutes. For location of the airbags, see *Where Are the Airbags?* ⇨ *49*.

The parts of the airbag that come into contact with you may be warm, but not too hot to touch. There may be some smoke and dust coming from the vents in the deflated airbags. Airbag inflation does not prevent the driver from seeing out of the windshield or being able to steer the vehicle, nor does it prevent people from leaving the vehicle.

⚠ Warning

When an airbag inflates, there may be dust in the air. This dust could cause breathing problems for people with a history of asthma or other breathing trouble. To avoid this, everyone in the vehicle should get out as soon as it is safe to do so. If you have breathing problems but cannot get out of the vehicle after an airbag inflates, then get fresh air by opening a window or a door. If you experience breathing problems following an airbag deployment, you should seek medical attention.

The vehicle has a feature that may automatically unlock the doors, turn on the interior lamps and hazard warning flashers, and shut off the fuel system after the airbags inflate. The feature may also activate, without airbag inflation, after an event that exceeds a predetermined threshold. After turning the ignition off and then on again, the fuel system will return to normal operation; the doors can be locked, the interior lamps can be turned off, and the hazard warning flashers can be turned off using the controls for those features. If any of these systems are damaged in the crash they may not operate as normal.

⚠ Warning

A crash severe enough to inflate the airbags may have also damaged important functions in the vehicle, such as the fuel system, brake and steering systems, etc. Even if the vehicle appears to be drivable after a moderate crash, there may be concealed damage that could make it difficult to safely operate the vehicle.

Use caution if you should attempt to restart the engine after a crash has occurred.

In many crashes severe enough to inflate the airbag, windshields are broken by vehicle deformation. Additional windshield breakage may also occur from the front outboard passenger airbag.

- Airbags are designed to inflate only once. After an airbag inflates, you will need some new parts for the airbag system. If you do not get them, the airbag system will not be there to help protect you in another crash. A new system will include airbag modules and possibly other parts. The service manual for the vehicle covers the need to replace other parts.
- The vehicle has a crash sensing and diagnostic module which records information after a crash. See *Vehicle Data Recording and Privacy* ⇨ *410* and *Event Data Recorders* ⇨ *411*.
- Let only qualified technicians work on the airbag system. Improper service can mean that an airbag system will not work properly. See your dealer for service.

Passenger Sensing System

The vehicle has a passenger sensing system for the front outboard passenger position. The passenger airbag status indicator will light on the overhead console when the vehicle is started.

The words ON and OFF, and the symbols for on and off, will be visible during the system check. When the system check is complete, either the word ON or OFF, and the symbol for on or off, will be visible. See *Passenger Airbag Status Indicator* ⇨ *96*.

The passenger sensing system turns off the front outboard passenger frontal airbag and knee airbag under certain conditions. No other airbag is affected by the passenger sensing system.

The passenger sensing system works with sensors that are part of the front outboard passenger seat and seat belt. The sensors are designed to detect the presence of a properly seated occupant and determine if the front outboard passenger frontal airbag and knee airbag should be allowed to inflate or not.

According to accident statistics, children are safer when properly secured in a rear seat in the correct child restraint for their weight and size.

Whenever possible, children aged 12 and under should be secured in a rear seating position.

Never put a rear-facing child seat in the front. This is because the risk to the rear-facing child is so great, if the airbag inflates.

⚠ Warning

A child in a rear-facing child restraint can be seriously injured or killed if the passenger frontal airbag inflates. This is because the back of the rear-facing child restraint would be very close to the inflating airbag. A child in a forward-facing child restraint can be seriously injured or killed if the passenger frontal airbag inflates and the passenger seat is in a forward position.

(Continued)

Warning (Continued)

Even if the passenger sensing system has turned off the front outboard passenger airbag(s), no system is fail-safe. No one can guarantee that an airbag will not deploy under some unusual circumstance, even though the airbag(s) are off.

Never put a rear-facing child restraint in the front seat, even if the airbag is off. If securing a forward-facing child restraint in the front outboard passenger seat, always move the seat as far back as it will go. It is better to secure child restraints in the rear seat. Consider using another vehicle to transport the child when a rear seat is not available.

The passenger sensing system is designed to turn off the front outboard passenger frontal airbag and knee airbag if:

- The front outboard passenger seat is unoccupied.
- The system determines an infant is present in a child restraint.
- A front outboard passenger takes his/her weight off of the seat for a period of time.

When the passenger sensing system has turned off the front outboard passenger frontal airbag and knee airbag, the OFF indicator will light and stay lit as a reminder that the airbags are off. See *Passenger Airbag Status Indicator* ⇨ *96*.

The passenger sensing system is designed to turn on the front outboard passenger frontal airbag and knee airbag, anytime the system senses that a person of adult size is sitting properly in the front outboard passenger seat.

When the passenger sensing system has allowed the airbags to be enabled, the ON indicator will light and stay lit as a reminder that the airbags are active.

For some children, including children in child restraints, and for very small adults, the passenger sensing system may or may not turn off the front outboard passenger frontal airbag and knee airbag, depending upon the person's seating posture and body build. Everyone in the vehicle who has outgrown child restraints should wear a seat belt properly — whether or not there is an airbag for that person.

⚠ Warning

If the airbag readiness light ever comes on and stays on, it means that something may be wrong with the airbag system. To help avoid injury to yourself or others, have the vehicle serviced right away. See *Airbag Readiness Light* ⇨ *96* for more information, including important safety information.

If the On Indicator Is Lit for a Child Restraint

The passenger sensing system is designed to turn off the front outboard passenger frontal airbag and knee airbag, if the system determines that an infant is present in a child restraint. If a child restraint has been installed and the ON indicator is lit:

1. Turn the vehicle off.
2. Remove the child restraint from the vehicle.
3. Remove any additional items from the seat such as blankets, cushions, seat covers, seat heaters, or seat massagers.
4. Reinstall the child restraint following the directions provided by the child restraint manufacturer and refer to *Securing Child Restraints (With the Seat Belt in the Front Seat)* ⇨ *74* or *Securing Child Restraints (With the Seat Belt in the Rear Seat)* ⇨ *72*.

   Make sure the seat belt retractor is locked by pulling the shoulder belt all the way out of the retractor when installing the child restraint,

even if the child restraint is equipped with a seat belt lock off. When the retractor lock is set, the belt can be tightened but not pulled out of the retractor.

5. If, after reinstalling the child restraint and restarting the vehicle, the ON indicator is still lit, turn the vehicle off. Then slightly recline the vehicle seatback and adjust the seat cushion, if adjustable, to make sure that the vehicle seatback is not pushing the child restraint into the seat cushion.

   Also make sure the child restraint is not trapped under the vehicle head restraint. If this happens, adjust the head restraint. See *Head Restraints* ⇨ *31*.

6. Restart the vehicle.

The passenger sensing system may or may not turn off the airbags for a child in a child restraint depending upon the child's size. It is better to secure the child restraint in a rear seat. Never put a rear-facing child restraint in the front seat, even if the ON indicator is not lit.

If the Off Indicator Is Lit for an Adult-Sized Occupant

If a person of adult size is sitting in the front outboard passenger seat, but the OFF indicator is lit, it could be because that person is not sitting properly in the seat or that the child restraint locking feature is engaged. Use the following steps to allow the system to detect that person and enable the front outboard passenger frontal airbag and knee airbag:

1. Turn the vehicle off.
2. Remove any additional material from the seat, such as blankets, cushions, seat covers, seat heaters, or seat massagers.
3. Place the seatback in the fully upright position.
4. Have the person sit upright in the seat, centered on the seat cushion, with legs comfortably extended.
5. If the shoulder portion of the belt is pulled out all the way, the child restraint locking feature will be engaged. This may unintentionally cause the passenger sensing system to turn the airbag off for some adult-sized occupants. If this happens, unbuckle the belt, let the belt go back all the way, and then buckle the belt again without pulling the belt out all the way.
6. Restart the vehicle and have the person remain in this position for two to three minutes after the ON indicator is lit.

⚠ Warning

If the front outboard passenger airbag is turned off for an adult-sized occupant, the airbag will not be able to inflate and help protect that person in a crash, resulting in an increased risk of serious injury or even death. An adult-sized occupant should not ride in the front outboard passenger seat, if the passenger airbag OFF indicator is lit.

Additional Factors Affecting System Operation

Seat belts help keep the passenger in position on the seat during vehicle maneuvers and braking, which helps the passenger sensing system maintain the passenger airbag status. See "Seat Belts" and "Child Restraints" in the Index for additional information about the importance of proper restraint use.

A thick layer of additional material, such as a blanket or cushion, or aftermarket equipment such as seat covers, seat heaters, and seat massagers can affect how well the passenger sensing system operates. We recommend that you not use seat covers or other aftermarket equipment except when approved by GM for your specific vehicle. See *Adding Equipment to the Airbag-Equipped Vehicle* ⇨ *58* for more information about modifications that can affect how the system operates.

The ON indicator may be lit if an object, such as a briefcase, handbag, grocery bag, laptop, or other electronic device, is put on an unoccupied seat. If this is not desired, remove the object from the seat.

⚠ Warning

Stowing articles under the passenger seat or between the passenger seat cushion and seatback may interfere with the proper operation of the passenger sensing system.

Servicing the Airbag-Equipped Vehicle

Airbags affect how the vehicle should be serviced. There are parts of the airbag system in several places around the vehicle. Your dealer and the service manual have information about servicing the vehicle and the airbag system. To purchase a service manual, see *Publication Ordering Information* ⇨ *408*.

⚠ Warning

For up to 10 seconds after the vehicle is turned off and the battery is disconnected, an airbag can still inflate during improper service. You can be injured if you are close to an airbag when it inflates. Avoid yellow connectors. They are probably part of the airbag system. Be sure to follow proper service procedures, and make sure the person performing work for you is qualified to do so.

Adding Equipment to the Airbag-Equipped Vehicle

Adding accessories that change the vehicle's frame, bumper system, height, front end, or side sheet metal may keep the airbag system from working properly.

The operation of the airbag system can also be affected by changing, including improperly repairing or replacing, any parts of the following:

- Airbag system, including airbag modules, front or side impact sensors, sensing and diagnostic module, or airbag wiring
- Front seats, including stitching, seams or zippers
- Seat belts
- Steering wheel, instrument panel, overhead console, ceiling trim, or pillar garnish trim
- Inner door seals, including speakers

Your dealer and the service manual have information about the location of the airbag modules and sensors, sensing and diagnostic module, and airbag wiring along with the proper replacement procedures.

In addition, the vehicle has a passenger sensing system for the front outboard passenger position, which includes sensors that are part of the passenger seat. The passenger sensing system may not operate properly if the original seat trim is replaced with non-GM covers, upholstery, or trim; or with GM covers, upholstery, or trim designed for a different vehicle. Any object, such as an aftermarket seat heater or a comfort-enhancing pad or device, installed under or on top of the seat fabric, could also interfere with the operation of the passenger sensing system. This could either prevent proper deployment of the passenger airbag(s) or prevent the passenger sensing system from properly turning off the passenger airbag(s). See *Passenger Sensing System* ⇨ *53*.

If the vehicle has rollover roof-rail airbags, see *Different Size Tires and Wheels* ⇨ *356* for additional important information.

If the vehicle must be modified because you have a disability and have questions about whether the modifications will affect the vehicle's airbag system, or if you have questions about whether the airbag system will be affected if the vehicle is modified for any other reason, call Customer Assistance. See *Customer Assistance Offices* ⇨ *401*.

Airbag System Check

The airbag system does not need regularly scheduled maintenance or replacement. Make sure the airbag readiness light is working. See *Airbag Readiness Light* ⇨ *96*.

Caution

If an airbag covering is damaged, opened, or broken, the airbag may not work properly. Do not open or break the airbag coverings. If there are any opened or broken airbag coverings, have the airbag covering and/or airbag module replaced. For the location of the airbags, see *Where Are the Airbags?* ⇨ *49*. See your dealer for service.

Replacing Airbag System Parts after a Crash

⚠ Warning

A crash can damage the airbag systems in the vehicle. A damaged airbag system may not properly protect you and your passenger(s) in a crash, resulting in serious injury or even death. To help make sure the airbag systems are working properly after a crash, have them inspected and any necessary replacements made as soon as possible.

If an airbag inflates, you will need to replace airbag system parts. See your dealer for service.

If the airbag readiness light stays on after the vehicle is started or comes on when you are driving, the airbag system may not work properly. Have the vehicle serviced right away. See *Airbag Readiness Light* ⇨ *96*.

Child Restraints

Older Children

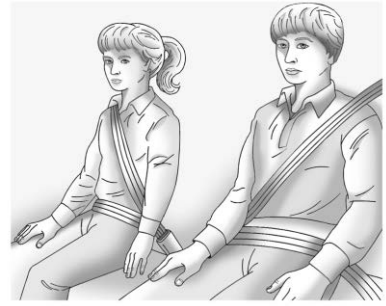

Older children who have outgrown booster seats should wear the vehicle's seat belts.

The manufacturer instructions that come with the booster seat state the weight and height limitations for that booster. Use a booster seat with a lap-shoulder belt until the child passes the fit test below:

- Sit all the way back on the seat. Do the knees bend at the seat edge? If yes, continue. If no, return to the booster seat.
- Buckle the lap-shoulder belt. Does the shoulder belt rest on the shoulder? If yes, continue. If no, try using the rear seat belt comfort guide, if available. See "Rear Seat Belt Comfort Guides" under *Lap-Shoulder Belt* ⇨ *44*. If a comfort guide is not available, or if the shoulder belt still does not rest on the shoulder, then return to the booster seat.
- Does the lap belt fit low and snug on the hips, touching the thighs? If yes, continue. If no, return to the booster seat.
- Can proper seat belt fit be maintained for the length of the trip? If yes, continue. If no, return to the booster seat.

Q: What is the proper way to wear seat belts?

A: An older child should wear a lap-shoulder belt and get the additional restraint a shoulder belt can provide. The shoulder belt should not cross the face or neck. The lap belt should fit snugly below the hips, just touching the top of the thighs. This applies belt

force to the child's pelvic bones in a crash. It should never be worn over the abdomen, which could cause severe or even fatal internal injuries in a crash.

Also see “Rear Seat Belt Comfort Guides” under *Lap-Shoulder Belt* ⇨ *44*.

According to accident statistics, children are safer when properly restrained in a rear seating position.

In a crash, children who are not buckled up can strike other people who are buckled up, or can be thrown out of the vehicle. Older children need to use seat belts properly.

⚠ Warning

Never allow more than one child to wear the same seat belt. The seat belt cannot properly spread the impact forces. In a crash, they can be crushed together and seriously injured. A seat belt must be used by only one person at a time.

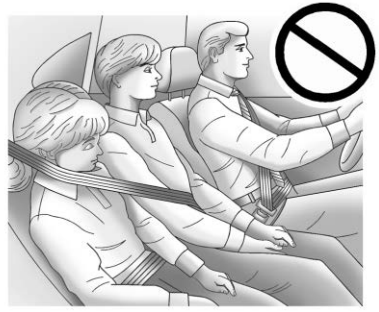

⚠ Warning

Never allow a child to wear the seat belt shoulder belt under both arms or behind their back. A child can be seriously injured by not wearing the lap-shoulder belt properly. In a crash, the child would not be restrained by the shoulder belt. The child could move too far forward increasing the chance of head and neck injury. The child might also slide under the lap belt. The belt force would then be applied right on the abdomen. That could cause

(Continued)

Warning (Continued)

serious or fatal injuries. The shoulder belt should go over the shoulder and across the chest.

Infants and Young Children

Everyone in a vehicle needs protection! This includes infants and all other children. Neither the distance traveled nor the age and size of the traveler changes the need, for everyone, to use safety restraints. In fact, the law in every state in the

United States and in every Canadian province says children up to some age must be restrained while in a vehicle.

⚠ Warning

Children can be seriously injured or strangled if a shoulder belt is wrapped around their neck. The shoulder belt can tighten but cannot be loosened if it is locked. The shoulder belt locks when it is pulled all the way out of the retractor. It unlocks when the shoulder belt is allowed to go all the way back into the retractor, but it cannot do this if it is wrapped around a child's neck. If the shoulder belt is locked and tightened around a child's neck, the only way to loosen the belt is to cut it.

Never leave children unattended in a vehicle and never allow children to play with the seat belts.

Every time infants and young children ride in vehicles, they should have the protection provided by appropriate child restraints. Neither the vehicle's seat belt system nor its airbag system is designed for them.

Children who are not restrained properly can strike other people, or can be thrown out of the vehicle.

⚠ Warning

Never hold an infant or a child while riding in a vehicle. Due to crash forces, an infant or a child will become so heavy it is not possible to hold it during a crash. For example, in a crash at only 40 km/h (25 mph), a 5.5 kg (12 lb) infant will suddenly become a 110 kg (240 lb) force on a person's arms. An infant or child should be secured in an appropriate child restraint.

⚠ Warning

Children who are up against, or very close to, any airbag when it inflates can be seriously injured or killed. Never put a rear-facing child restraint in the front outboard seat. Secure a rear-facing child restraint in a rear seat. It is also better to secure a forward-facing child restraint in a rear seat. If you must secure a forward-facing child restraint in the front outboard seat, always move the front passenger seat as far back as it will go.

Child restraints are devices used to restrain, seat, or position children in the vehicle and are sometimes called child seats or car seats.

There are three basic types of child restraints:

- Forward-facing child restraints
- Rear-facing child restraints
- Belt-positioning booster seats

The proper child restraint for your child depends on their size, weight, and age, and also on whether the child restraint is compatible with the vehicle in which it will be used.

For each type of child restraint, there are many different models available. When purchasing a child restraint, be sure it is designed to be used in a motor vehicle. If it is, the child restraint will have a label saying that it meets federal motor vehicle safety standards.

The instruction manual that is provided with the child restraint states the weight and height limitations for that particular child restraint. In addition, there are many kinds of child restraints available for children with special needs.

⚠ Warning

To reduce the risk of neck and head injury in a crash, infants and toddlers should be secured in a rear-facing child restraint until age two, or until they reach the maximum height and weight limits of their child restraint.

⚠ Warning

A young child's hip bones are still so small that the vehicle seat belt may not remain low on the hip bones, as it should. Instead, it may settle up around the child's abdomen. In a crash, the belt would apply force on a body area that is unprotected by any bony structure. This alone could cause serious or fatal injuries. To reduce the risk of serious or fatal injuries during a crash, young children should always be secured in an appropriate child restraint.

Child Restraint Systems

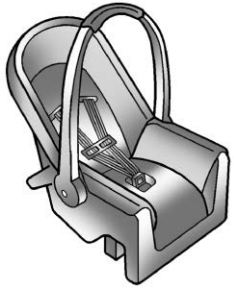

Rear-Facing Infant Restraint

A rear-facing child restraint provides restraint with the seating surface against the back of the infant.

The harness system holds the infant in place and, in a crash, acts to keep the infant positioned in the restraint.

Forward-Facing Child Restraint

A forward-facing child restraint provides restraint for the child's body with the harness.

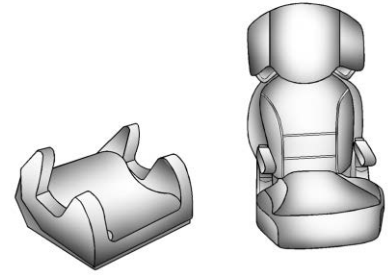

Booster Seats

A belt-positioning booster seat is used for children who have outgrown their forward-facing child restraint. Boosters are designed to improve the fit of the vehicle's seat belt system until the child is large enough for the vehicle seat belts to fit properly without a booster seat. See the seat belt fit test in *Older Children* ⇨ *59*.

Securing an Add-On Child Restraint in the Vehicle

⚠ Warning

A child can be seriously injured or killed in a crash if the child restraint is not properly secured in the vehicle. Secure the child restraint properly in the vehicle using the vehicle seat belt or LATCH system, following the instructions that came with that child restraint and the instructions in this manual.

To help reduce the chance of injury, the child restraint must be secured in the vehicle. Child restraints must be secured in vehicle seats by lap belts or the lap belt portion of a lap-shoulder belt, or by the LATCH system. See *Lower Anchors and Tethers for Children (LATCH System)* ⇨ *65* for more information. Children can be endangered in a crash if the child restraint is not properly secured in the vehicle.

When securing an add-on child restraint, refer to the following:

1. Instruction labels provided on the child restraint
2. Instruction manual provided with the child restraint
3. This vehicle owner's manual

The child restraint instructions are important, so if they are not available, obtain a replacement copy from the manufacturer.

Keep in mind that an unsecured child restraint can move around in a collision or sudden stop and injure people in the vehicle. Be sure to properly secure any child restraint in the vehicle — even when no child is in it.

In some areas Certified Child Passenger Safety Technicians (CPSTs) are available to inspect and demonstrate how to correctly use and install child restraints. In the U.S., refer to the National Highway Traffic Safety Administration (NHTSA) website to locate the nearest child safety seat inspection station. For CPST availability in Canada, check with Transport Canada or the Provincial Ministry of Transportation office.

Securing the Child Within the Child Restraint

⚠ Warning

A child can be seriously injured or killed in a crash if the child is not properly secured in the child restraint. Secure the child properly following the instructions that came with that child restraint.

Where to Put the Restraint

According to accident statistics, children and infants are safer when properly restrained in an appropriate child restraint secured in a rear seating position.

Whenever possible, children aged 12 and under should be secured in a rear seating position.

Never put a rear-facing child restraint in the front. This is because the risk to the rear-facing child is so great if the airbag deploys.

⚠ Warning

A child in a rear-facing child restraint can be seriously injured or killed if the front passenger airbag inflates. This is because the back of the rear-facing child restraint would be very close to the inflating airbag. A child in a forward-facing child restraint can be seriously injured or killed if the front passenger airbag inflates and the passenger seat is in a forward position.

Even if the passenger sensing system has turned off the front passenger frontal airbag, no system is fail-safe. No one can guarantee that an airbag will not deploy under some unusual circumstance, even though it is turned off.

Secure rear-facing child restraints in a rear seat, even if the airbag is off. If you secure a forward-facing child restraint in the front seat, always move the front passenger

(Continued)

Warning (Continued)

seat as far back as it will go. It is better to secure the child restraint in a rear seat.

See *Passenger Sensing System* ⇨ *53* for additional information.

When securing a child restraint with the seat belts in a rear seat position, study the instructions that came with the child restraint to make sure it is compatible with this vehicle.

Child restraints and booster seats vary considerably in size, and some may fit in certain seating positions better than others. Do not install a child restraint in any rear seating position where it cannot be installed securely.

Depending on where you place the child restraint and the size of the child restraint, you may not be able to access adjacent seat belts or LATCH anchors for additional passengers or child restraints. Adjacent seating positions should not be used if the child restraint prevents access to or interferes with the routing of the seat belt.

The seat in front of an installed child restraint should be adjusted to ensure proper installation according to the child restraint manual.

Wherever a child restraint is installed, be sure to follow the instructions that came with the child restraint and secure the child restraint properly.

Keep in mind that an unsecured child restraint can move around in a collision or sudden stop and injure people in the vehicle. Be sure to properly secure any child restraint in the vehicle — even when no child is in it.

Lower Anchors and Tethers for Children (LATCH System)

The LATCH system secures a child restraint during driving or in a crash. LATCH attachments on the child restraint are used to attach the child restraint to the anchors in the vehicle. The LATCH system is designed to make installation of a child restraint easier.

In order to use the LATCH system in your vehicle, you need a child restraint that has LATCH attachments. LATCH-compatible rear-facing and forward-facing child seats can be properly installed using either the LATCH anchors or the vehicle's seat belts. Do not use both the seat belts and the LATCH anchorage system to secure a rear-facing or forward-facing child seat.

Booster seats use the vehicle's seat belts to secure the child and the booster seat. If the manufacturer recommends that the booster seat be secured with the LATCH system, this can be done as long as the booster seat can be positioned properly and there is no interference with the proper positioning of the lap-shoulder belt on the child.

Make sure to follow the instructions that came with the child restraint, and also the instructions in this manual.

When installing a child restraint with a top tether, you must also use either the lower anchors or the seat belts to properly secure the child restraint. A child restraint must never be installed using only the top tether and anchor.

For a forward-facing 5-pt harness child restraint where the combined weight of the child and restraint are up to 29.5 kg (65 lb), use either the lower LATCH anchorages with the top tether anchorage, or the seat belt with the top tether anchorage. Where the combined weight of the child and restraint are greater than 29.5 kg (65 lb), use the seat belt with the top tether anchorage only.

Recommended Methods for Attaching Child Restraints

Restraint Type	**Combined Weight of the Child + Child Restraint**	**Use Only Approved Attachment Methods Shown with an X**			
		LATCH – Lower Anchors Only	**Seat Belt Only**	**LATCH** – Lower Anchors and Top Tether Anchor	**Seat Belt and Top Tether Anchor**
Rear-Facing Child Restraint	Up to 29.5 kg (65 lb)	**X**	**X**		
Rear-Facing Child Restraint	Greater than 29.5 kg (65 lb)		**X**		
Forward-Facing Child Restraint	Up to 29.5 kg (65 lb)			**X**	**X**
Forward-Facing Child Restraint	Greater than 29.5 kg (65 lb)				**X**

See *Securing Child Restraints (With the Seat Belt in the Front Seat)* ⇨ *74* or *Securing Child Restraints (With the Seat Belt in the Rear Seat)* ⇨ *72*.

Child restraints built after March 2014 will be labeled with the specific child weight up to which the LATCH system can be used to install the restraint.

The following explains how to attach a child restraint with these attachments in the vehicle.

Not all vehicle seating positions have lower anchors. In this case, the seat belt must be used (with top tether where available) to secure the child restraint. See *Securing Child Restraints (With the Seat Belt in the Front Seat)* ⇨ *74* or *Securing Child Restraints (With the Seat Belt in the Rear Seat)* ⇨ *72*.

Lower Anchors

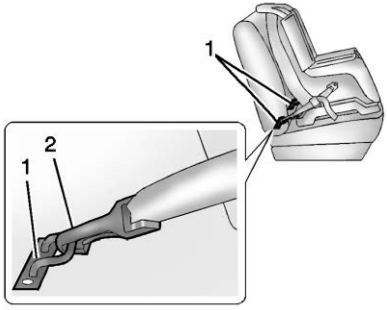

Lower anchors (1) are metal bars built into the vehicle. There are two lower anchors for each LATCH seating position that will accommodate a child restraint with lower attachments (2).

Top Tether Anchor

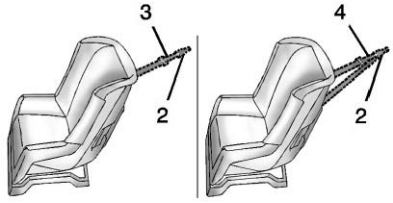

A top tether (3,4) is used to secure the top of the child restraint to the vehicle. A top tether anchor is built into the vehicle. The top tether attachment hook (2) on the child restraint connects to the top tether anchor in the vehicle in order to reduce the forward movement and rotation of the child restraint during driving or in a crash.

The child restraint may have a single tether (3) or a dual tether (4). Either will have a single attachment hook (2) to secure the top tether to the anchor.

Some child restraints with top tethers are designed for use with or without the top tether being attached. Others require the top tether always to be attached. In Canada, the law requires that forward-facing child restraints have a top tether, and that the tether be attached. Be sure to read and follow the instructions for your child restraint.

Lower Anchor and Top Tether Anchor Locations

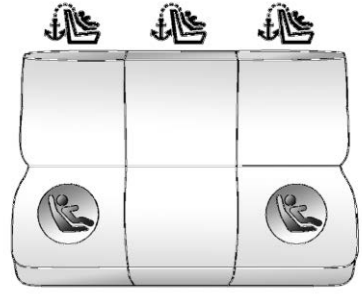

Rear Seat

: Seating positions with top tether anchors.

: Seating positions with two lower anchors.

To assist in locating the lower anchors, each seating position with lower anchors has two labels, near the crease between the seatback and the seat cushion.

To assist in locating the top tether anchors, the top tether anchor symbol is on the cover.

The lower anchors are located under the labeled covers on the seat cushion near the crease between the seatback and the seat cushion.

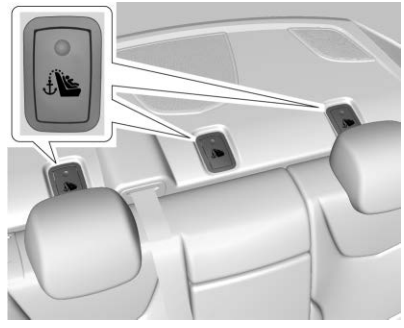

The top tether anchors are behind the rear seat, on the filler panel. Open the covers to access the anchors. Be sure to use an anchor located directly behind the seating position where the child restraint will be placed.

Do not secure a child restraint in a position without a top tether anchor if a national or local law requires that the top tether be attached, or if the instructions that come with the child restraint say that the top tether must be attached.

According to accident statistics, children and infants are safer when properly restrained in a child restraint system or infant restraint system secured in a rear seating position. See *Where to Put the Restraint* ⇨ *64* for additional information.

Securing a Child Restraint Designed for the LATCH System

⚠ Warning

A child could be seriously injured or killed in a crash if the child restraint is not properly attached to the vehicle using either the LATCH anchors or the vehicle seat belt. Follow the instructions that came with the child restraint and the instructions in this manual.

⚠ Warning

To reduce the risk of serious or fatal injuries during a crash, do not attach more than one child restraint to a single anchor. Attaching more than one child restraint to a single anchor could cause the anchor or attachment to come loose or even break during a crash. A child or others could be injured.

⚠ Warning

Children can be seriously injured or strangled if a shoulder belt is wrapped around their neck. The shoulder belt can tighten but cannot be loosened if it is locked. The shoulder belt locks when it is pulled all the way out of the retractor. It unlocks when the shoulder belt is allowed to go all the way back into the retractor, but it cannot do this if it is wrapped around a child's neck. If the shoulder belt is locked and tightened around a child's neck, the only way to loosen the belt is to cut it.

Buckle any unused seat belts behind the child restraint so children cannot reach them. Pull the shoulder belt all the way out of the retractor to set the lock, and tighten the belt behind the child restraint after the child restraint has been installed.

⚠ Warning

The power seats will work with the ignition off. Children could operate the power seats and be injured. Never leave children alone in the vehicle.

Caution

Do not let the LATCH attachments rub against the vehicle's seat belts. This may damage these parts.
If necessary, move buckled seat belts to avoid rubbing the LATCH attachments.

If you need to secure more than one child restraint in the rear seat, see *Where to Put the Restraint ⇨ 64*.

1. Attach and tighten the lower attachments to the lower anchors. If the child restraint does not have lower attachments or the desired seating position does not have lower anchors, secure the child restraint with the top tether and the seat belt. Refer to the child

restraint manufacturer instructions and the instructions in this manual.

1.1. Find the lower anchors for the desired seating position.

1.2. Put the child restraint on the seat.

1.3. Attach and tighten the lower attachments on the child restraint to the lower anchors.

2. If the child restraint manufacturer recommends that the top tether be attached, attach and tighten the top tether to the top tether anchor, if equipped. Refer to the child restraint instructions and the following steps:

2.1. Find the top tether anchor.

2.2. Open the top tether anchor cover to expose the anchor.

2.3. Route, attach, and tighten the top tether according to your child restraint instructions and the following instructions:

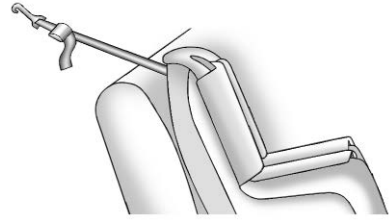

If the position you are using does not have a headrest or head restraint and you are using a single tether, route the tether over the seatback.

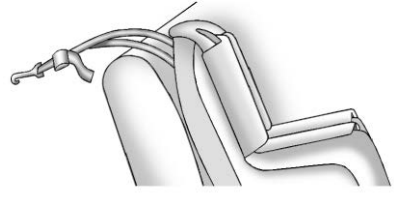

If the position you are using does not have a headrest or head restraint and you are using a dual tether, route the tether over the seatback.

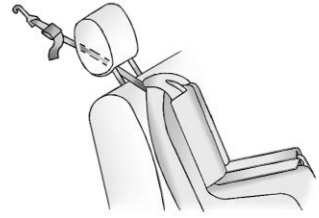

If the position you are using has an adjustable head restraint and you are using a single tether, raise the head restraint and route the tether under the head restraint and in between the head restraint posts.

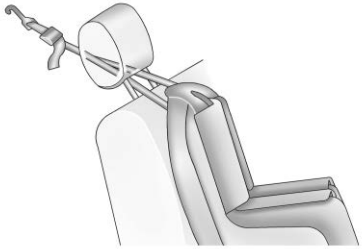

If the position you are using has an adjustable head restraint and you are using a dual tether, raise the head restraint and route the tether under the head restraint and in between the head restraint posts.

3. Before placing a child in the child restraint, make sure it is securely held in place. To check, grasp the child restraint at the LATCH path and attempt to move it side to side and back and forth. There should be no more than 2.5 cm (1 in) of movement for proper installation.

Replacing LATCH System Parts After a Crash

⚠ Warning

A crash can damage the LATCH system in the vehicle. A damaged LATCH system may not properly secure the child restraint, resulting in serious injury or even death in a crash. To help make sure the LATCH system is working properly after a crash, see your dealer to have the system inspected and any necessary replacements made as soon as possible.

If the vehicle has the LATCH system and it was being used during a crash, new LATCH system parts may be needed.

New parts and repairs may be necessary even if the LATCH system was not being used at the time of the crash.

Securing Child Restraints (With the Seat Belt in the Rear Seat)

When securing a child restraint with the seat belts in a rear seat position, study the instructions that came with the child restraint to make sure it is compatible with this vehicle.

If the child restraint has the LATCH system, see *Lower Anchors and Tethers for Children (LATCH System)* ⇨ *65* for how and where to install the child restraint using LATCH. If a child restraint is secured in the vehicle using a seat belt and it uses a top tether, see *Lower Anchors and Tethers for Children (LATCH System)* ⇨ *65* for top tether anchor locations.

Do not secure a child seat in a position without a top tether anchor if a national or local law requires that the top tether be anchored, or if the instructions that come with the child restraint say that the top tether must be anchored.

In Canada, the law requires that forward-facing child restraints have a top tether, and that the tether be attached.

If the child restraint or vehicle seat position does not have the LATCH system, you will be using the seat belt to secure the child restraint. Be sure to follow the instructions that came with the child restraint.

If more than one child restraint needs to be installed in the rear seat, be sure to read *Where to Put the Restraint* ⇨ *64*.

1. Put the child restraint on the seat.

   If the head restraint interferes with the proper installation of the child restraint, see your dealer for assistance.

2. Pick up the latch plate, and run the lap and shoulder portions of the vehicle seat belt through or around the child restraint. The child restraint instructions will show you how.

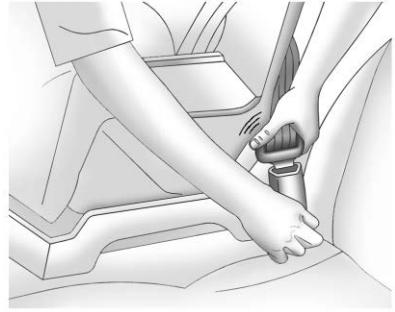

3. Push the latch plate into the buckle until it clicks.

   Position the release button on the buckle, away from the child restraint, so that the seat belt could be quickly unbuckled if necessary.

4. Pull the shoulder belt all the way out of the retractor to set the lock. When the retractor lock is set, the belt can be tightened but not pulled out of the retractor.

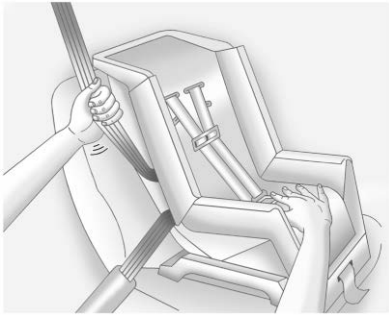

5. To tighten the belt, push down on the child restraint, pull the shoulder portion of the belt to tighten the lap portion of the belt, and feed the shoulder belt back into the retractor. When installing a forward-facing child restraint, it may be helpful to use your knee to push down on the child restraint as you tighten the belt.

   Try to pull the belt out of the retractor to make sure the retractor is locked. If the retractor is not locked, repeat Steps 4 and 5.

6. If the child restraint has a top tether, follow the child restraint manufacturer's instructions regarding the use of the top tether. See *Lower Anchors and Tethers for Children (LATCH System)* ⇨ *65*.

7. Before placing a child in the child restraint, make sure it is securely held in place. To check, grasp the child restraint at the seat belt path and attempt to move it side to side and back and forth. When the child restraint is properly installed, there should be no more than 2.5 cm (1 in) of movement.

To remove the child restraint, unbuckle the vehicle seat belt and let it return to the stowed position. If the top tether is attached to a top tether anchor, disconnect it.

If the head restraint was removed, reinstall it before the seating position is used. See "Head Restraint Removal and Reinstallation" under*Lower Anchors and Tethers for Children (LATCH System)* ⇨ *65* for additional information on installing the head restraint properly.

Securing Child Restraints (With the Seat Belt in the Front Seat)

This vehicle has airbags. A rear seat is a safer place to secure a forward-facing child restraint. See *Where to Put the Restraint* ⇨ *64*.

In addition, the vehicle has a passenger sensing system which is designed to turn off the front outboard passenger frontal airbag and knee airbag under certain conditions. See *Passenger Sensing System* ⇨ *53* and *Passenger Airbag Status Indicator* ⇨ *96* for more information, including important safety information.

Never put a rear-facing child seat in the front. This is because the risk to the rear-facing child is so great if the airbag deploys.

⚠ Warning

A child in a rear-facing child restraint can be seriously injured or killed if the front outboard passenger frontal airbag inflates. This is because the back of the rear-facing child restraint would be very close to the inflating airbag. A child in a forward-facing child restraint can be seriously injured or killed if the front outboard passenger frontal airbag inflates and the passenger seat is in a forward position.

Even if the passenger sensing system has turned off the front outboard passenger airbag(s), no system is fail-safe. No one can guarantee that an airbag will not deploy under some unusual circumstance, even though the airbag(s) are off.

Secure rear-facing child restraints in a rear seat, even if the airbag(s) are off. If you secure a forward-facing child restraint in the

(Continued)

Warning (Continued)

front outboard passenger seat, always move the seat as far back as it will go. It is better to secure the child restraint in a rear seat.

See *Passenger Sensing System* ⇨ *53* for additional information.

If the child restraint uses a top tether, see *Lower Anchors and Tethers for Children (LATCH System)* ⇨ *65* for top tether anchor locations.

Do not secure a child seat in a position without a top tether anchor if a national or local law requires that the top tether be anchored, or if the instructions that come with the child restraint say that the top tether must be anchored.

In Canada, the law requires that forward-facing child restraints have a top tether, and that the tether be attached.

When using the lap-shoulder belt to secure the child restraint in this position, follow the instructions that came with the child restraint and the following instructions:

1. Move the seat as far back as it will go before securing the forward-facing child restraint. Move the seat upward or the seatback to an upright position, if needed, to get a tight installation of the child restraint.

   When the passenger sensing system has turned off the front outboard passenger frontal airbag and knee airbag, the OFF indicator on the passenger airbag status indicator should light and stay lit when you start the vehicle. See *Passenger Airbag Status Indicator* ⇨ *96*.
2. Put the child restraint on the seat.
3. Pick up the latch plate, and run the lap and shoulder portions of the vehicle seat belt through or around the child restraint. The child restraint instructions will show you how.

4. Push the latch plate into the buckle until it clicks.

   Position the release button on the buckle, away from the child restraint, so that the seat belt could be quickly unbuckled if necessary.

5. Pull the shoulder belt all the way out of the retractor to set the lock. When the retractor lock is set, the belt can be tightened but not pulled out of the retractor.

   It may be necessary to slide the adjustable stop along the webbing toward the outboard anchor to fully tighten the seat belt around the child restraint. While a child restraint is installed, the adjustable stop should be positioned on the portion of the webbing that does not interact with the child restraint.

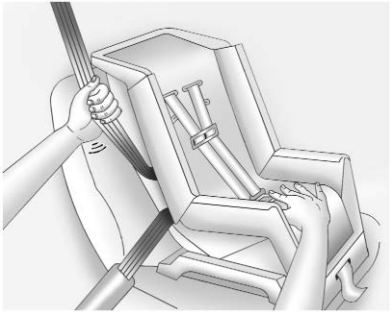

6. To tighten the belt, push down on the child restraint, pull the shoulder portion of the belt to tighten the lap portion of the belt, and feed the shoulder belt back into the retractor. When installing a forward-facing child restraint, it may be helpful to use your knee to push down on the child restraint as you tighten the belt.

   Try to pull the belt out of the retractor to make sure the retractor is locked. If the retractor is not locked, repeat Steps 5 and 6.

7. Before placing a child in the child restraint, make sure it is securely held in place. To check, grasp the child restraint at the seat belt path and attempt to move it side to side and back and forth. When the child restraint is properly installed, there should be no more than 2.5 cm (1 in) of movement.

If the airbags are off, the OFF indicator in the passenger airbag status indicator will come on and stay on when the vehicle is started.

If a child restraint has been installed and the ON indicator is lit, see "If the On Indicator Is Lit for a Child Restraint" under *Passenger Sensing System* ⇨ *53*.

To remove the child restraint, unbuckle the vehicle seat belt and let it return to the stowed position.

Storage

Storage Compartments

Storage Compartments 78
Glove Box 78
Cupholders 78
Center Console Storage 79
Umbrella Storage 79

Additional Storage Features

Cargo Tie-Downs 80
Cargo Management System 80

Storage Compartments

⚠ Warning

Do not store heavy or sharp objects in storage compartments. In a crash, these objects may cause the cover to open and could result in injury.

Glove Box

Pull the handle from the right to open the glove box. To close, push up until it latches. Use the vehicle key to lock or unlock.

Cupholders

There are two cupholders in the front center console.

The cupholder has a removable liner.

To clean the liner, remove and use mild soap and water. Dry the liner completely before reinstalling.

To remove the liner, pull up on the tab and remove.

To reinstall the liner, press into the cupholder with the key logo in the rear cupholder.

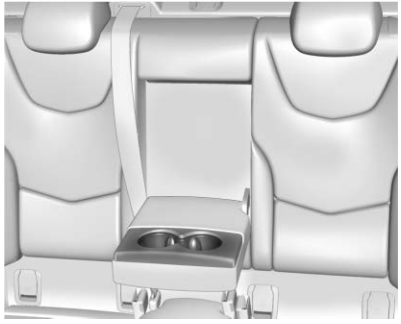

Rear Cupholders

Pull the armrest down to access the rear cupholders.

Center Console Storage

If equipped, the SD card is used for navigation. Do not remove the card from the holder.

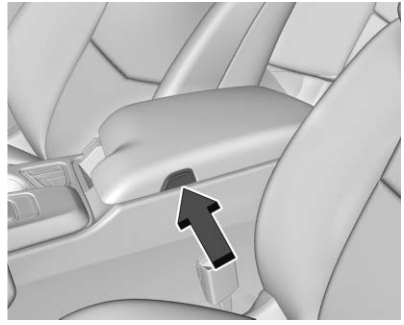

Press the button and lift to access the storage area. There is an accessory power outlet, two USB ports, and an SD card slot inside. See *Power Outlets* ⇨ *85* or *USB Port* ⇨ *145*.

If equipped, there is a removable phone holder to store a phone and the cord while charging.

Umbrella Storage

Slide a compact umbrella no larger than 6 cm (2.36 in) in diameter into the opening on the driver or passenger door.

Additional Storage Features

Cargo Tie-Downs

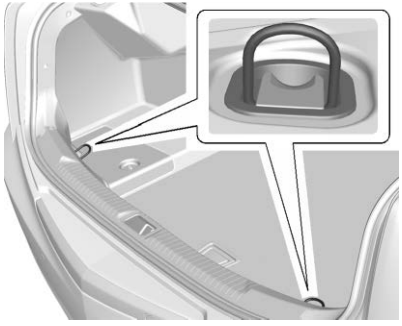

The cargo tie-downs can be used to secure small loads inside the trunk.

Cargo Management System

The vehicle has a cargo management system in the trunk.

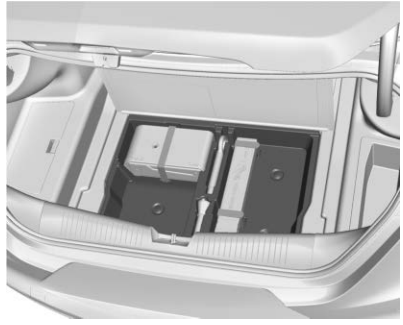

Lift up on the load floor and push forward.

Instruments and Controls

Controls

Steering Wheel Adjustment 82
Steering Wheel Controls 82
Heated Steering Wheel 82
Horn 82
Windshield Wiper/Washer 82
Compass 84
Clock 84
Power Outlets 85
Wireless Charging 85

Warning Lights, Gauges, and Indicators

Warning Lights, Gauges, and Indicators 87
Instrument Cluster (Base Level) 88
Instrument Cluster (Uplevel) 90
Speedometer 93
Odometer 93
Trip Odometer 93
Tachometer 93
Fuel Gauge 94
Engine Coolant Temperature Gauge (Base Level) 94
Engine Coolant Temperature Gauge (Uplevel) 95
Seat Belt Reminders 95
Airbag Readiness Light 96
Passenger Airbag Status Indicator 96
Charging System Light 97
Malfunction Indicator Lamp (Check Engine Light) 97
Brake System Warning Light 99
Electric Parking Brake Light 100
Service Electric Parking Brake Light 100
Antilock Brake System (ABS) Warning Light 100
Performance Shifting Light 101
Automatic Vehicle Hold (AVH) Light 101
Lane Keep Assist (LKA) Light ... 101
Automatic Emergency Braking (AEB) Disabled Light 101
Vehicle Ahead Indicator 102
Pedestrian Ahead Indicator 102
Traction Off Light 102
StabiliTrak OFF Light 102
Traction Control System (TCS)/ StabiliTrak Light 103
Engine Coolant Temperature Warning Light 103
Driver Mode Control Light 103
Tire Pressure Light 104
Engine Oil Pressure Light 104
Low Fuel Warning Light 105
Security Light 105
High-Beam On Light 105
Lamps On Reminder 106
Cruise Control Light (Base Level) 106
Cruise Control Light (Uplevel) ... 106
Door Ajar Light 107

Information Displays

Driver Information Center (DIC) (Base Level) 107
Driver Information Center (DIC) (Uplevel) 110
Head-Up Display (HUD) 112

Vehicle Messages

Vehicle Messages 116
Engine Power Messages 117
Vehicle Speed Messages 117

Vehicle Personalization

Vehicle Personalization 117

Universal Remote System

Universal Remote System 122
Universal Remote System Programming 122
Universal Remote System Operation 124

Controls

Steering Wheel Adjustment

To adjust the steering wheel:

1. Pull the lever down.
2. Move the steering wheel up or down.
3. Pull or push the steering wheel closer or away from you.
4. Pull the lever up to lock the steering wheel in place.

Do not adjust the steering wheel while driving.

Steering Wheel Controls

The infotainment system can be operated by using the steering wheel controls. See *Steering Wheel Controls* ⇨ *137*.

Heated Steering Wheel

: If equipped, press to turn the heated steering wheel on or off. An indicator light next to the button displays when the feature is turned on.

The steering wheel takes about three minutes to be fully heated.

Automatic Heated Steering Wheel

If equipped with remote start, the heated steering wheel will turn on automatically during a remote start along with the heated seats when it is cold outside. The heated steering wheel indicator light may not come on.

If equipped with auto heated seats, the heated steering wheel will turn on when the auto heated seat is activated. The heated steering wheel indicator will display the state of the steering wheel heat. See *Heated and Ventilated Front Seats* ⇨ *37*.

Horn

Press on the steering wheel pad to sound the horn.

Windshield Wiper/Washer

With the ignition on or in ACC/ACCESSORY, move the windshield wiper lever to select the wiper speed.

HI : Use for fast wipes.

LO : Use for slow wipes.

INT : Use this setting for intermittent wipes or for Rainsense wipes, when Rainsense is enabled. For intermittent wipes, move the lever up to INT, then turn the band up for more frequent wipes or down for less frequent wipes. If Rainsense is enabled, see "Rainsense" later in this section.

If the windshield wipers are in use while driving, the exterior lamps come on automatically if the exterior lamp control is in AUTO. The transition time for the lamps coming on varies based on wiper speed. See "Lights On with Wipers" under *Automatic Headlamp System* ⇨ *128*.

OFF : Use to turn the wipers off.

1X : For a single wipe, briefly move the wiper lever down. For several wipes, hold the wiper lever down.

Clear snow and ice from the wiper blades and windshield before using them. If frozen to the windshield, carefully loosen or thaw them. Damaged blades should be replaced. See *Wiper Blade Replacement* ⇨ *327*.

Heavy snow or ice can overload the wiper motor.

⚠ Warning

In freezing weather, do not use the washer until the windshield is warmed. Otherwise the washer fluid can form ice on the windshield, blocking your vision.

⚠ Warning

Before driving the vehicle, always clear snow and ice from the hood, windshield, washer nozzles, roof, and rear of the vehicle, including all

(Continued)

Warning (Continued)

lamps and windows. Reduced visibility from snow and ice buildup could lead to a crash.

Wiper Parking

If the ignition is turned off while the wipers are on LO, HI, or INT with Rainsense disabled, they will immediately stop.

If the windshield wiper lever is then moved to OFF before the driver door is opened or within 10 minutes, the wipers will restart and move to the base of the windshield.

If the ignition is turned off while the wipers are performing wipes due to windshield washing or Rainsense, the wipers continue to run until they reach the base of the windshield.

Rainsense

If equipped with Rainsense, a sensor near the top center of the windshield detects the amount of water on the windshield and controls the frequency of the windshield wiper. To turn this

feature on or off, see “Rainsense Wipers” under *Vehicle Personalization* ⇨ *117*.

Keep this area of the windshield clear of debris to allow for best system performance.

AUTO : When enabled, move the windshield wiper lever to AUTO. Turn the band on the wiper lever to adjust the sensitivity.

- Turn the band up for more sensitivity to moisture.
- Turn the band down for less sensitivity to moisture.
- Move the windshield wiper lever out of the AUTO position to deactivate Rainsense.

Wiper Arm Assembly Protection

When using an automatic car wash, move the windshield wiper lever to OFF. This disables the automatic Rainsense windshield wipers.

With Rainsense, if the transmission is in N (Neutral) and the vehicle speed is very slow, the wipers will automatically stop at the base of the windshield.

The wiper operations return to normal when the transmission is no longer in N (Neutral) or the vehicle speed has increased.

: Pull the windshield wiper lever toward you to spray windshield washer fluid and activate the wipers. The wipers will continue until the lever is released or the maximum wash time is reached. When the windshield wiper lever is released, additional wipes may occur depending on how long the windshield washer had been activated. See *Washer Fluid* ⇨ *323* for information on filling the windshield washer fluid reservoir.

Compass

The vehicle has a compass display on the Driver Information Center (DIC). The compass receives its heading and other information from the Global Positioning System (GPS) antenna, StabiliTrak/Electronic Stability Control (ESC), and vehicle speed information.

The compass system is designed to operate for a certain number of miles or degrees of turn before needing a signal from the GPS satellites. When the compass display shows CAL, drive the vehicle for a short distance in an open area where it can receive a GPS signal. The compass system will automatically determine when a GPS signal is restored and provide a heading again.

Clock

Set the time and date using the infotainment system. See "Time / Date" under *Settings* ⇨ *176*.

Power Outlets

The accessory power outlets can be used to plug in electrical equipment, such as a cell phone or MP3 player.

The vehicle has two accessory power outlets:

- Inside the center console storage area.
- On the rear of the center floor console.

Lift the cover to access the accessory power outlet.

Certain electrical accessories may not be compatible with the accessory power outlet and could overload a vehicle circuit breaker or adapter fuse. If overloaded, the circuit breaker will reset after all devices are disconnected or if Retained Accessory Power (RAP) is turned off and then back on. See *Retained Accessory Power (RAP)* ⇨ *223*. Wait one minute to allow the circuit breaker to reset before reconnecting devices or turning RAP back on. If the problem continues, the issue could be within your device. Try another known good device to make sure the circuit breaker is operating properly. If this does not resolve your problem, see your dealer.

Caution

Failure to replace the circuit breaker with the minifuse could overheat the cigar lighter and damage the vehicle.

When adding electrical equipment, be sure to follow the proper installation instructions included with the equipment. See *Add-On Electrical Equipment* ⇨ *303*.

Caution

Hanging heavy equipment from the power outlet can cause damage not covered by the vehicle warranty. The power outlets are designed for accessory power plugs only, such as cell phone charge cords.

Always unplug electrical equipment when not in use and do not plug in equipment that exceeds the maximum 15 amps rating.

Wireless Charging

The vehicle may have a wireless charging pad below the climate controls. The system operates at 145 kHz and wirelessly charges one Qi compatible smartphone. The power output of the system is capable of charging at a rate up to 3 amp (15W), as requested by the compatible smartphone. See *Radio Frequency Statement* ⇨ *409*.

⚠ Warning

Wireless charging can affect the operation of an implanted pacemaker or other medical devices. If you have one, it is recommended to consult with your doctor before using the wireless charging system.

The vehicle must be on, in ACC/ACCESSORY, or Retained Accessory Power (RAP) must be active. The wireless charging feature may not correctly indicate charging when the vehicle is in RAP, or during Bluetooth phone calls. See *Retained Accessory Power (RAP)* ⇨ *223*.

The operating temperature is -20 °C (-4 °F) to 60 °C (140 °F) for the charging system and 0 °C (32 °F) to 35 °C (95 °F) for the smartphone.
A text message may be displayed on the radio indicating that the system is unable to charge due to high temperature while the charger or the phone is above or below these operating temperature ranges.

⚠ Warning

Remove all objects from the charging pad before charging your compatible smartphone. Objects, such as coins, keys, rings, paper clips, or cards, between the smartphone and charging pad will become very hot. On the rare occasion that the charging system does not detect an object, and the object gets wedged between the smartphone and charger, remove the smartphone and allow the object to cool before removing it from the charging pad, to prevent burns.

To charge a compatible smartphone:

1. Remove all objects from the charging pad. The system may not charge if there are any objects between the smartphone and charging pad.
2. Place the smartphone face up on the symbol on the charging pad.

   To maximize the charge rate, ensure the smartphone is fully seated and centered in the holder with nothing under it. A thick smartphone case may prevent the wireless charger from working, or may reduce the charging performance. See your dealer for additional information.
3. A green ϟ next to the ☎ will appear on the infotainment display. This indicates that the smartphone is properly positioned and charging.

   If the ϟ turns yellow, ensure that the charging pad is clear of any objects and that the smartphone is capable of wireless charging before re-positioning it.

   If the ϟ does not illuminate, the smartphone may need to be repositioned. To reposition, turn the smartphone 180 degrees and wait three seconds before placing/aligning it on the pad again.

The smartphone may become warm during charging. This is normal. In warmer temperatures, the speed of charging maybe be reduced.

Software Acknowledgements

Certain Wireless Charging Module product from LG Electronics, Inc. ("LGE") contains the open source software detailed below. Refer to the

indicated open source licenses (as are included following this notice) for the terms and conditions of their use.

OSS Notice Information

To obtain the source code that is contained in this product, please visit http://opensource.lge.com. In addition to the source code, all referred license terms, warranty disclaimers and copyright notices are available for download. LG Electronics will also provide open source code to you on CD-ROM for a charge covering the cost of performing such distribution (such as the cost of media, shipping, and handling) upon email request to opensource@lge.com. This offer is valid for three (3) years from the date on which you purchased the product.

Freescale-WCT library

Copyright (c) 2012-2014 Freescale Semiconductor, Inc.. All rights reserved.

1. Redistributions of source code must retain the above copyright notice, this list of conditions and the following disclaimer.
2. Redistributions in binary form must reproduce the above copyright notice, this list of conditions and the following disclaimer in the documentation and/or other materials provided with the distribution.
3. Neither the name of the copyright holder nor the names of its contributors may be used to endorse or promote products derived from this software without specific prior written permission.

THIS SOFTWARE IS PROVIDED BY THE COPYRIGHT HOLDERS AND CONTRIBUTORS "AS IS" AND ANY EXPRESS OR IMPLIED WARRANTIES, INCLUDING, BUT NOT LIMITED TO, THE IMPLIED WARRANTIES OF MERCHANTABILITY AND FITNESS FOR A PARTICULAR PURPOSE ARE DISCLAIMED. IN NO EVENT SHALL THE COPYRIGHT HOLDER OR CONTRIBUTORS BE LIABLE FOR ANY DIRECT, INDIRECT, INCIDENTAL, SPECIAL, EXEMPLARY, OR CONSEQUENTIAL DAMAGES (INCLUDING, BUT NOT LIMITED TO, PROCUREMENT OF SUBSTITUTE GOODS OR SERVICES; LOSS OF USE, DATA, OR PROFITS; OR BUSINESS INTERRUPTION) HOWEVER CAUSED AND ON ANY THEORY OF LIABILITY, WHETHER IN CONTRACT, STRICT LIABILITY, OR TORT (INCLUDING NEGLIGENCE OR OTHERWISE) ARISING IN ANY WAY OUT OF THE USE OF THIS SOFTWARE, EVEN IF ADVISED OF THE POSSIBILITY OF SUCH DAMAGE.

Warning Lights, Gauges, and Indicators

Warning lights and gauges can signal that something is wrong before it becomes serious enough to cause an expensive repair or replacement. Paying attention to the warning lights and gauges could prevent injury.

Some warning lights come on briefly when the engine is started to indicate they are working. When one of the warning lights comes on and stays on while driving, or when one of the gauges shows there may be a problem, check the section that explains what to do. Waiting to do repairs can be costly and even dangerous.

Instrument Cluster (Base Level)

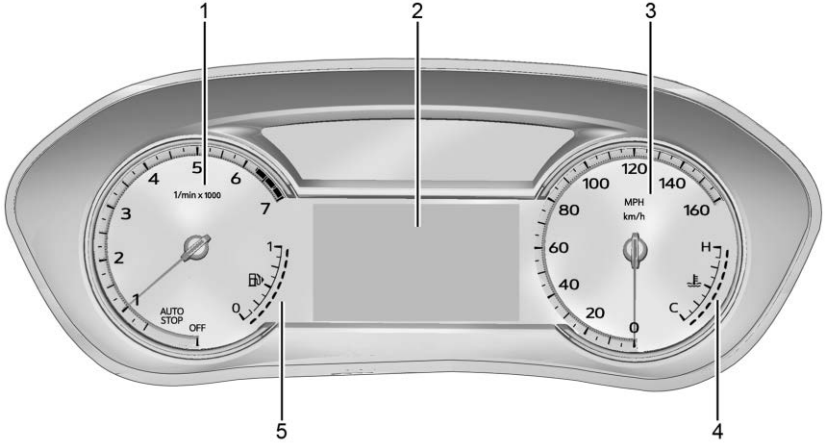

English Base Level Cluster Shown, Metric Similar

1. *Tachometer* ⇨ *93*
2. *Driver Information Center (DIC) (Base Level)* ⇨ *107* or *Driver Information Center (DIC) (Uplevel)* ⇨ *110*
3. *Speedometer* ⇨ *93*
4. *Engine Coolant Temperature Gauge (Base Level)* ⇨ *94* or *Engine Coolant Temperature Gauge (Uplevel)* ⇨ *95*
5. *Fuel Gauge* ⇨ *94*

Cluster Menu

There is an interactive display area in the center of the instrument cluster.

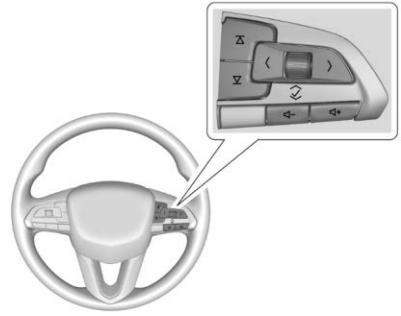

Use the right steering wheel control to open and scroll through the different items and displays.

Press < or > to access the cluster applications. Use the thumbwheel to scroll through the list of available features within the applications. Not all applications or features will be available on all vehicles.

- Info App. This is where the selected Driver Information Center (DIC) displays can be viewed. See *Driver Information Center (DIC) (Base Level)* ⇨ *107* or *Driver Information Center (DIC) (Uplevel)* ⇨ *110*.
- Audio
- Navigation
- Phone
- Options

Audio

In the Audio menu browse for music, select from the favorites, or change the audio source. Use the thumbwheel to change the station or go to the next or previous track.

Navigation

If there is an active route, press the thumbwheel to cancel or resume route guidance, or turn the voice prompts on or off.

Phone

In the Phone menu, if there is no active phone call, view recent calls, or scroll through contacts. If there is an active call, mute the phone or switch to handset operation.

Options

Use the thumbwheel to scroll through items in the Options menu.

Head-up Display (HUD) : If equipped, this feature allows for adjusting the angle of the HUD image and changing or turning off the Speed Limit Sign.

HUD Rotation (Uplevel): Press the thumbwheel while Adjust Rotation is highlighted to enter Adjust Mode. Scroll to adjust the angle of the HUD display. Press the thumbwheel to confirm and save the setting. This feature may only be available in P (Park).

Speed Sign: If equipped, press the thumbwheel while Speed Sign is highlighted to turn it on or off.

Units : Choose US or metric units by pressing the thumbwheel while the desired item is highlighted.

Info Page Options : Press the thumbwheel to select the items to be displayed in the Info app. See *Driver Information Center (DIC) (Base Level)* ⇨ *107* or *Driver Information Center (DIC) (Uplevel)* ⇨ *110*.

Display : Press the thumbwheel to enter the Display menu. Select to turn on or off the speedometer, time, fuel range, or, if equipped, compass or speed sign.

Speed Warning : The Speed Warning display allows the driver to set a warning at a speed that they do not want to exceed. To set the Speed Warning press the thumbwheel when Speed Warning is displayed. Use the thumbwheel to adjust the value and press to set the speed.

Once the speed is set, this feature can be turned off by pressing the thumbwheel while viewing this page. If the selected speed limit is exceeded, a pop-up warning is displayed with a chime.

Software Information : Displays open source software information.

Instrument Cluster (Uplevel)

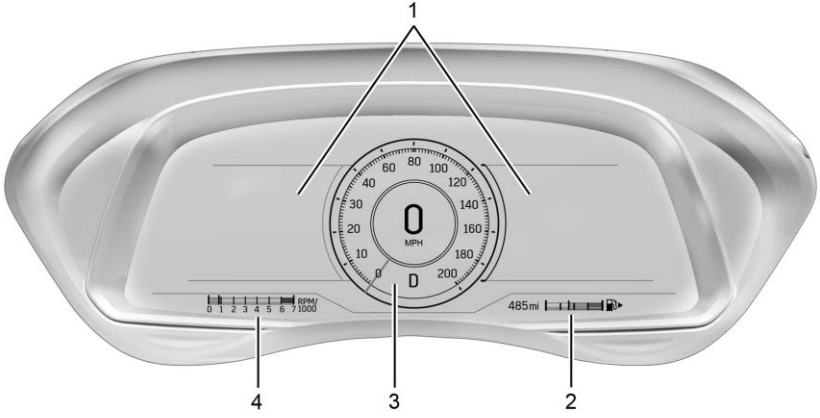

Tour Mode Shown, Other Modes Similar

1. *Driver Information Center (DIC) (Base Level)* ⇨ *107* or *Driver Information Center (DIC) (Uplevel)* ⇨ *110*
2. *Fuel Gauge* ⇨ *94*
3. *Speedometer* ⇨ *93*
4. *Tachometer* ⇨ *93*

Cluster Menu

There is an interactive display area in the center of the instrument cluster.

Use the right steering wheel control to open and scroll through the different items and displays.

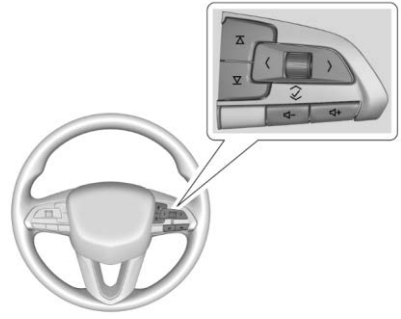

Press < or > to access the cluster applications. Use the thumbwheel to scroll ∧ or ∨ through the list of available features. Press the thumbwheel to select. Not all applications will be available on all vehicles.

- Info Tiles Selection/Trip Computer/ Maintenance: The selected Driver Information Center (DIC) displays can be viewed. See *Driver Information Center (DIC) (Base Level)* ⇨ *107* or *Driver Information Center (DIC) (Uplevel)* ⇨ *110*.
- Performance (If Equipped)
- Driver Assistance
- Audio
- Phone
- Navigation
- Options
- Simplify

Performance

If equipped, press the thumbwheel to enter the Performance menu. Scroll through the available items.

Friction Bubble : A four quadrant visual display, indicative of the four corners of the car, with a “bubble” showing where the most inertia is being exerted on the vehicle.

Performance Timer : Press the thumbwheel to enter the setup menu. Use the thumbwheel to scroll to select the desired speed segment, then press the thumbwheel to enter the submenu. Use the thumbwheel to confirm the speed segment selection or to reset the best time for that segment. On the next acceleration, the performance timer will record the time. Pressing the thumbwheel while the timer is running will cancel the timer if done before reaching the end of the segment.

Lap Timer : Press the thumbwheel when Lap Timer is displayed to start, stop, or reset the lap timer. Press the thumbwheel while the Lap Timer page is active to start the timer. If the lap timer is active, pressing the thumbwheel will stop the current lap timer and start a new lap. Pressing the thumbwheel within 10 seconds after completing the last lap (Stop Lap Timer option is displayed), the Lap Timer will stop. Press the thumbwheel after the lap timer is stopped to reset the timer, or to view the lap history. A maximum of 16 laps will be stored.

Launch Control : If equipped, the Launch Control display allows the driver to adjust the parameters of the Launch Control System. See *Track Events and Competitive Driving (V-Series Only)* ⇨ *207*.

Audio

In the Audio menu, use the thumbwheel to scroll through audio presets.

Phone

In the Phone menu, if there is no active phone call, view recent calls, or scroll through contacts. If there is an active call, mute the phone or switch to handset operation.

Navigation

If there is an active route, press the thumbwheel to cancel or resume route guidance, or turn the voice prompts on or off.

Options

Use the thumbwheel to scroll through items in the Options menu.

Display Themes

Press the thumbwheel to enter the Display menu. There are three instrument cluster display configurations to choose from. Sport, Tour, and Track (if equipped). The style of the cluster will change depending on the theme selected.

Default is linked to Driver Mode. Other display themes can be set

If in My Mode then those displays plus HUD (if equipped) can be set.

- Sport: Displays Coolant Temperature, Fuel Gauge, Fuel Range, Compass, Drive Mode Indicator, Odometer, Speed, Tachometer, Electronic Transmission Range, Current Gear, Speed Limit, Info Area, and Interaction Area, and Cruise Control (if engaged).
- Tour: Displays Fuel Gauge, Fuel Range, Compass, Drive Mode Indicator, Odometer, Speed, Tachometer, Electronic Transmission Range, Current Gear, Peak Performance, Speed Limit, Info Area, and Interaction Area, and Cruise Control (if engaged).
- Track: Displays Coolant Temperature, Fuel Gauge, Drive Mode Indicator, Speed, Tachometer, Electronic Transmission Range, Current Gear, Info Area, and Interactive Area.

Preset info tiles shown on each layout:

Sport : Time and Temperature, Oil Temperature, Tire Status, Oil Pressure

Track : Oil Pressure, Transmission Fluid Temperature, Tire Pressure and Tire Temperature, Oil Temperature

Tour : Time and Temperature

Speed Warning

The Speed Warning display allows the driver to set a speed that they do not want to exceed. To set the Speed Warning, press the thumbwheel when Speed Warning is displayed, or press the thumbwheel on the main view to set the speed value. Scroll to adjust the value. Press the thumbwheel to set the speed. Once the speed is set, this feature can be turned off by pressing the thumbwheel while viewing this page. If the selected speed limit is exceeded, a pop-up warning is displayed with a chime.

Speed Sign

Shows sign information, which comes from a roadway database in the onboard navigation, if equipped.

Units

Press the thumbwheel while Units is displayed to enter the Units menu. Choose US or metric units by pressing the thumbwheel while the desired item is highlighted. A selected mark will be displayed next to the selected item.

Tachometer

If equipped, the Tachometer allows the driver to choose between the traditional tachometer (linear gage) or the numerical tachometer (shift lights with numerical Tachometer RPM) when Track theme is selected.

Tire Pressure

If the tire pressure readings need to be recalibrated at any time, this option initiates the Tire Pressure Relearn function. The selection of relearn opens a pop-up when the thumbwheel is pressed for five seconds.

Head-Up Display (HUD) Rotation

Press the thumbwheel while Adjust Rotation is highlighted to enter Adjust Mode. Scroll to adjust the angle of the HUD display. Press the thumbwheel to confirm and save the setting.

Remote Relearn

If equipped, this feature allows for the vehicle to relearn remote keys.

See "Programming with Recognized Remote Keys" under *Remote Keyless Entry (RKE) System Operation* ⇨ *7*.

Fuel Range

Fuel Range displays the approximate distance the vehicle can be driven without refueling. LOW will be displayed when the vehicle is low on fuel. The fuel range estimate is based on an average of the vehicle's fuel economy over recent driving history and the amount of fuel remaining in the fuel tank.

Software Info

Press the thumbwheel while Software Info is highlighted to display open source software information.

Reset To Defaults

Allows the driver to reset to default settings.

Simplify

Press the thumbwheel to enter the Simplify menu. Simplify Mode allows certain features of the instrument cluster to be hidden. These features include info tiles and interactive areas.

Using the thumbwheel, except to acknowledge an alert, will exit Simplify Mode.

The selected features will stay hidden even after starting and restarting the vehicle, unless Simplify Mode is manually canceled.

Speedometer

The speedometer shows the vehicle's speed in either kilometers per hour (km/h) or miles per hour (mph).

Odometer

The odometer shows how far the vehicle has been driven, in either kilometers or miles.

Trip Odometer

The trip odometer shows how far the vehicle has been driven since the trip odometer was last reset.

The trip odometer is accessed and reset through the Driver Information Center (DIC). See *Driver Information Center (DIC) (Base Level)* ⇨ *107* or *Driver Information Center (DIC) (Uplevel)* ⇨ *110*.

Tachometer

The tachometer displays the engine speed in revolutions per minute (rpm).

For vehicles with the Stop/Start system, when the ignition is on, the tachometer indicates the vehicle status. When pointing to AUTO STOP (Base Level) or the cluster displays AUTO STOP text (Uplevel), the engine is off but the vehicle is on and can move. The engine could auto start at any time. When the indicator points to OFF, the vehicle is off.

When the engine is on, the tachometer will indicate the engine's revolutions per minute (rpm). The tachometer may vary by several

hundred rpm, during Auto Stop mode, when the engine is shutting off and restarting.

Fuel Gauge

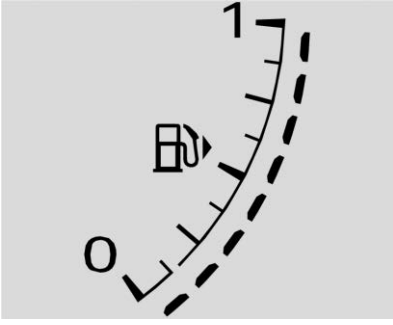

Base Level

Uplevel

When the ignition is on, the fuel gauge indicates about how much fuel is left in the tank.

There is an arrow near the fuel gauge pointing to the side of the vehicle the fuel door is on.

When the indicator nears empty, the low fuel light comes on. There still is a little fuel left, but the vehicle should be refueled soon.

Here are three things that some owners ask about. None of these show a problem with the fuel gauge:

- It takes a little more, or less fuel to fill up than the gauge indicated. For example, the gauge may have indicated the tank was half full, but it actually took a little more, or less than half the tank's capacity to fill the tank.
- The gauge moves a little while turning a corner, speeding up or braking.
- The gauge takes a few seconds to stabilize after the ignition is turned on and goes back to empty when the ignition is turned off.

Engine Coolant Temperature Gauge (Base Level)

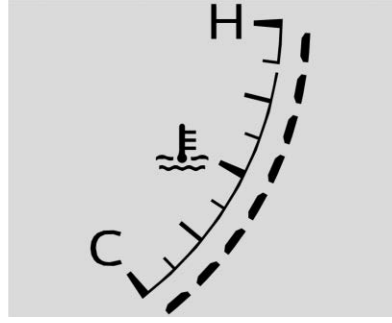

English

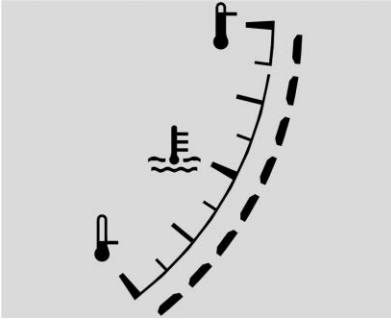

Metric

This gauge measures the temperature of the vehicle's engine.

While driving under normal operating conditions, if the red LED is illuminated, the engine is too hot. Pull off the road, stop the vehicle, and turn off the engine as soon as possible.

Engine Coolant Temperature Gauge (Uplevel)

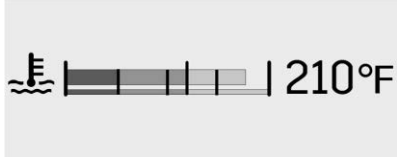

This gauge shows the engine coolant temperature.

If the gauge pointer moves into the red zone, the engine is too hot.

This reading indicates the same thing as the warning light. It means that the engine coolant has overheated. If the vehicle has been operating under normal driving conditions, pull off the road, stop the vehicle, and turn off the engine as soon as possible. See *Engine Overheating* ⇨ *322* for more information.

Seat Belt Reminders

Driver Seat Belt Reminder Light

There is a driver seat belt reminder light on the instrument cluster.

When the vehicle is started, this light flashes and a chime may come on to remind the driver to fasten their seat belt.

Then the light stays on solid until the belt is buckled. This cycle may continue several times if the driver remains or becomes unbuckled while the vehicle is moving.

If the driver seat belt is buckled, neither the light nor the chime comes on.

Front Passenger Seat Belt Reminder Light

The vehicle may have a front passenger seat belt reminder light near the passenger airbag status indicator. See *Passenger Sensing System* ⇨ *53*.

When the vehicle is started, this light flashes and a chime may come on to remind passengers to fasten their seat belt.

Then the light stays on solid until the belt is buckled. This cycle continues several times if the front passenger remains or becomes unbuckled while the vehicle is moving.

If the front passenger seat belt is buckled, neither the chime nor the light comes on.

The front passenger seat belt reminder light and chime may come on if an object is put on the seat such as a briefcase, handbag, grocery bag, laptop, or other electronic device. To turn off the reminder light and/or chime, remove the object from the seat or buckle the seat belt.

Airbag Readiness Light

This light shows if there is an electrical problem with the airbag system. The system check includes the airbag sensor(s), the passenger sensing system, the pretensioners, the airbag modules, the wiring, and the crash sensing and diagnostic module. For more information on the airbag system, see *Airbag System* ⇨ *48*.

The airbag readiness light comes on for several seconds when the vehicle is started. If the light does not come on then, have it fixed immediately.

⚠ Warning

If the airbag readiness light stays on after the vehicle is started or comes on while driving, it means the airbag system might not be working properly. The airbags in the vehicle might not inflate in a crash, or they could even inflate without a crash. To help avoid injury, have the vehicle serviced right away.

If there is a problem with the airbag system, a Driver Information Center (DIC) message may also come on.

Passenger Airbag Status Indicator

The vehicle has a passenger sensing system. See *Passenger Sensing System* ⇨ *53* for important safety information. The overhead console has a passenger airbag status indicator.

When the vehicle is started, the passenger airbag status indicator will light ON and OFF, and the symbols for on and off, for several seconds as a system check. Then, after several more seconds, the status indicator will light either ON or OFF, and either the symbol for on or off, to let you know the status of the front outboard passenger frontal airbag and knee airbag.

If the word ON, and the on symbol, is lit on the passenger airbag status indicator, it means that the front outboard passenger frontal airbag and knee airbag are allowed to inflate.

If the word OFF, and the off symbol, is lit on the passenger airbag status indicator, it means that the passenger sensing system has turned off the front outboard passenger frontal airbag and knee airbag.

If, after several seconds, all of the symbols remain lit, or if no symbols are lit, or if the airbag readiness light is on, there may be a problem with the lights or the passenger sensing system. See your dealer for service right away.

⚠ Warning

If the airbag readiness light ever comes on and stays on, it means that something may be wrong with the airbag system. To help avoid injury to yourself or others, have the vehicle serviced right away. See *Airbag Readiness Light* ⇨ *96* for more information, including important safety information.

Charging System Light

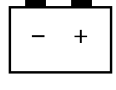

The charging system light comes on briefly when the ignition is turned on, but the engine is not running, as a check to show the light is working. It should go out when the engine is started.

If the light stays on, or comes on while driving, there may be a problem with the electrical charging system. Have it checked by your dealer. Driving while this light is on could drain the battery.

When this light comes on, or is flashing, the Driver Information Center (DIC) also displays a message.

If a short distance must be driven with the light on, be sure to turn off all accessories, such as the radio and air conditioner. Find a safe place to stop the vehicle.

Malfunction Indicator Lamp (Check Engine Light)

This light is part of the vehicle's emission control on-board diagnostic system. If this light is on while the engine is running, a malfunction has been detected and the vehicle may

require service. The light should come on to show that it is working when the ignition is in Service Mode. See *Ignition Positions* ⇨ *219*.

Malfunctions are often indicated by the system before any problem is noticeable. Being aware of the light and seeking service promptly when it comes on may prevent damage.

Caution

If the vehicle is driven continually with this light on, the emission control system may not work as well, the fuel economy may be lower, and the vehicle may not run smoothly. This could lead to costly repairs that might not be covered by the vehicle warranty.

Caution

Modifications to the engine, transmission, exhaust, intake, or fuel system, or the use of replacement tires that do not meet the original tire specifications, can cause this light to come on. This could lead to costly repairs not covered by the vehicle warranty. This could also affect the vehicle's ability to pass an Emissions Inspection/Maintenance test. See *Accessories and Modifications* ⇨ *306*.

If the light is flashing : A malfunction has been detected that could damage the emission control system and increase vehicle emissions. Diagnosis and service may be required.

To help prevent damage, reduce vehicle speed and avoid hard accelerations and uphill grades. If towing a trailer, reduce the amount of cargo being hauled as soon as possible.

If the light continues to flash, find a safe place to park. Turn the vehicle off and wait at least 10 seconds before restarting the engine. If the light is still flashing, follow the previous guidelines and see your dealer for service as soon as possible.

If the light is on steady : A malfunction has been detected. Diagnosis and service may be required.

Check the following:

- If fuel has been added to the vehicle using the capless fuel funnel adapter, make sure that it has been removed. See "Filling the Tank with a Portable Gas Can" under *Filling the Tank* ⇨ *295*. The diagnostic system can detect if the adapter has been left installed in the vehicle, allowing fuel to evaporate into the atmosphere. A few driving trips with the adapter removed may turn off the light.

- Poor fuel quality can cause inefficient engine operation and poor driveability, which may go away once the engine is warmed up. If this occurs, change the fuel brand. It may require at least one full tank of the proper fuel to turn the light off. See *Recommended Fuel (LSY 2.0L L4 Turbo Engine)* ⇨ *293* or *Recommended Fuel (L3B 2.7L L4 Turbo Engine)* ⇨ *294*.

If the light remains on, see your dealer.

Emissions Inspection and Maintenance Programs

If the vehicle requires an Emissions Inspection/Maintenance test, the test equipment will likely connect to the vehicle's Data Link Connector (DLC).

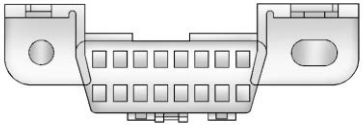

The DLC is under the instrument panel to the left of the steering wheel. Connecting devices that are not used to perform an Emissions Inspection/Maintenance test or to service the vehicle may affect vehicle operation. See *Add-On Electrical Equipment* ⇨ *303*. See your dealer if assistance is needed.

The vehicle may not pass inspection if:

- The light is on when the engine is running.
- The light does not come on when the ignition is in Service Mode.
- Critical emission control systems have not been completely diagnosed. If this happens, the vehicle would not be ready for inspection and might require several days of routine driving before the system is ready for inspection. This can happen if the 12-volt battery has recently been replaced or run down, or if the vehicle has been recently serviced.

See your dealer if the vehicle will not pass or cannot be made ready for the test.

Brake System Warning Light

BRAKE

Metric English

This light should come on briefly when the vehicle is turned on. If it does not come on then, have it fixed so it will be ready to warn you if there is a problem.

If the light comes on and stays on at start up, there is a brake problem. Have the brake system inspected right away.

If the light comes on while driving, pull off the road and stop carefully. The brake system has electric brake boost. Vehicle speed may be limited when the brake system warning light comes on. The brake pedal might be harder to push, or the brake pedal may go closer to the floor. It could

take longer to stop. If the light is still on, have the vehicle towed for service. See *Towing the Vehicle* ⇨ *369*.

⚠ Warning

The brake system might not be working properly if the brake system warning light is on. Driving with the brake system warning light on can lead to a crash. If the light is still on after the vehicle has been pulled off the road and carefully stopped, have the vehicle towed for service.

Electric Parking Brake Light

Metric

PARK

English

This light comes on when the parking brake is applied. If the light continues flashing after the parking brake is released, or while driving, there is a problem with the Electric Parking Brake system. A message may also display in the Driver Information Center (DIC).

If the light does not come on, or remains flashing, see your dealer.

Service Electric Parking Brake Light

On some vehicles the service electric parking brake light should come on briefly when the vehicle is started. If it does not come on, have it fixed so it will be ready to warn if there is a problem. For vehicles with the reconfigurable cluster, this light may not come on when the vehicle is started.

If this light stays on, the vehicle should be taken to a dealer as soon as possible. See *Electric Parking Brake* ⇨ *237*. A message may also display in the Driver Information Center (DIC).

Antilock Brake System (ABS) Warning Light

This warning light should come on briefly when the vehicle is turned on. If the light does not come on, have it fixed so it will be ready to warn if there is a problem.

If the light comes on while driving, safely stop as soon as it is possible and turn off the vehicle. Then turn on the vehicle again to reset the system.

If the ABS warning light stays on, or comes on again while driving, the vehicle needs service. A chime may also sound when the light stays on.

If the ABS warning light is the only light on, the vehicle has regular brakes, but ABS is not functioning.

If both the ABS warning light and the brake system warning light are on, ABS is not functioning and there is a problem with the regular brakes. See your dealer for service.

See *Brake System Warning Light* ⇨ *99*.

Performance Shifting Light

If equipped, this light may display green when Sport Mode is activated and certain driving conditions are met. Sport Mode detects when the vehicle is being driven in a competitive manner, and adjusts the shifting of the gears accordingly. See *Driver Mode Control* ⇨ *241*.

Automatic Vehicle Hold (AVH) Light

This light comes on when AVH is turned on. See *Automatic Vehicle Hold (AVH)* ⇨ *239*.

Lane Keep Assist (LKA) Light

After the vehicle is started, this light turns off and stays off if LKA has not been turned on or is unavailable.

If equipped, this light is white if LKA is turned on, but not ready to assist. This light is green if LKA is turned on and is ready to assist.

LKA may assist by gently turning the steering wheel if the vehicle approaches a detected lane marking. The LKA light is amber when assisting.

This light flashes amber as a Lane Departure Warning (LDW) alert, to indicate that the lane marking has been crossed.

LKA will not assist or alert if the turn signal is active in the direction of lane departure, or if LKA detects that you are accelerating, braking, or actively steering.

See *Lane Keep Assist (LKA)* ⇨ *291*.

Automatic Emergency Braking (AEB) Disabled Light

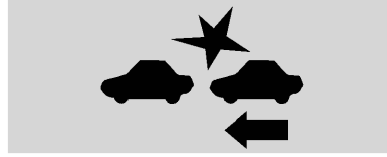

This indicator will display when Automatic Emergency Braking or Front Pedestrian Braking has been turned off or is currently unavailable due to malfunction.

See *Automatic Emergency Braking (AEB)* ⇨ *285*.

See *Front Pedestrian Braking (FPB) System* ⇨ *287*.

Vehicle Ahead Indicator

If equipped, this indicator will display green when a vehicle is detected ahead and amber when you are following a vehicle ahead much too closely.

See *Forward Collision Alert (FCA) System* ⇨ *283*.

Pedestrian Ahead Indicator

If equipped, this indicator will display amber when a nearby pedestrian is detected in front of the vehicle.

See *Front Pedestrian Braking (FPB) System* ⇨ *287*.

Traction Off Light

This light comes on briefly when the vehicle is turned on. If it does not, have the vehicle serviced by your dealer. If the system is working normally, the indicator light then turns off.

The traction off light comes on when the Traction Control System (TCS) has been turned off. If StabiliTrak/Electronic Stability Control (ESC) is turned off, TCS is also turned off. To turn TCS and ESC off and on, see *Traction Control/Electronic Stability Control* ⇨ *239*.

If TCS is off, wheel spin is not limited unless necessary to help protect the driveline from damage. Adjust driving accordingly.

StabiliTrak OFF Light

This light comes on briefly when the vehicle is turned on. If the light does not come on, have the vehicle serviced by your dealer. If the system is working normally, the indicator light then turns off.

This light comes on when the StabiliTrak/Electronic Stability Control (ESC) system is turned off.

If StabiliTrak/ESC is off, the Traction Control System (TCS) is also off. To turn ESC off and on, see *Traction Control/Electronic Stability Control* ⇨ *239*.

If ESC and TCS are off, the systems do not assist in controlling the vehicle. Adjust driving accordingly.

Traction Control System (TCS)/StabiliTrak Light

This light comes on briefly when the vehicle is turned on.

If the light does not come on, have the vehicle serviced by your dealer. If the system is working normally, the indicator light turns off.

If the light is on and not flashing, the TCS and potentially the StabiliTrak/ESC system are not fully operational and may not assist in maintaining control. Adjust driving accordingly.

If the condition persists, see your dealer as soon as possible. A Driver Information Center (DIC) message may display.

The light flashes when the TCS and/or the StabiliTrak/ESC system is actively working.

See *Traction Control/Electronic Stability Control* ⇨ *239*.

Engine Coolant Temperature Warning Light

On some vehicles this light comes on briefly while starting the vehicle. If it does not, have the vehicle serviced by the dealer. If the system is working normally the indicator light goes off. For vehicles with the reconfigurable cluster, this light may not come on when starting the vehicle.

Caution

The engine coolant temperature warning light indicates that the vehicle has overheated. Driving with this light on can damage the engine and it may not be covered by the vehicle warranty. See *Engine Overheating* ⇨ *322*.

The engine coolant temperature warning light comes on when the engine has overheated.

If this happens pull over and turn off the engine as soon as possible. See *Engine Overheating* ⇨ *322*.

Driver Mode Control Light

This light comes on when Sport Mode is selected.

This light comes on when Snow/Ice Mode is selected.

This light comes on when Track Mode is selected. See *Driver Mode Control* ⇨ *241*.

This light comes on when V Mode is selected. See *Driver Mode Control* ⇨ *241*.

This light comes on when My Mode is selected. See *Driver Mode Control* ⇨ *241*.

Tire Pressure Light

For vehicles with the Tire Pressure Monitor System (TPMS), this light comes on briefly when the engine is started. It provides information about tire pressures and the TPMS.

When the Light Is On Steady

This indicates that one or more of the tires are significantly underinflated.

A Driver Information Center (DIC) tire pressure message may also display. Stop as soon as possible, and inflate the tires to the pressure value shown on the Tire and Loading Information label. See *Tire Pressure* ⇨ *346*.

When the Light Flashes First and Then Is On Steady

If the light flashes for about a minute and then stays on, there may be a problem with the TPMS. If the problem is not corrected, the light will come on at every ignition cycle. See *Tire Pressure Monitor Operation* ⇨ *349*.

Engine Oil Pressure Light

Caution

Lack of proper engine oil maintenance can damage the engine. Driving with the engine oil low can also damage the engine. The repairs would not be covered by the vehicle warranty. Check the oil level as soon as possible. Add oil if required, but if the oil level is within the operating range and the oil pressure is still low, have the vehicle serviced. Always follow the maintenance schedule for changing engine oil.

This light should come on briefly as the engine is started. If it does not come on, have the vehicle serviced by your dealer.

If the light comes on and stays on, it means that oil is not flowing through the engine properly. The vehicle could be low on oil and might have some other system problem. See your dealer.

Low Fuel Warning Light

A Low Fuel Warning Light near the fuel gauge comes on briefly when the ignition is turned on as a check to show it is working.

It also comes on when the fuel gauge indicator nears empty. The light turns off when fuel is added. If it does not, have the vehicle serviced.

Security Light

The security light should come on briefly as the engine is started. If it does not come on, have the vehicle serviced by your dealer. If the system is working normally, the indicator light turns off.

If the light stays on and the engine does not start, there could be a problem with the theft-deterrent system. See *Immobilizer Operation* ⇨ *23*.

High-Beam On Light

This light comes on when the high-beam headlamps are in use. See *Headlamp High/Low-Beam Changer* ⇨ *128*.

IntelliBeam Light

This light comes on when the IntelliBeam system, if equipped, is enabled. See *Exterior Lamp Controls* ⇨ *126*.

Lamps On Reminder

This light comes on when the exterior lamps are in use, except when only the Daytime Running Lamps (DRL) are active. See *Exterior Lamp Controls* ⇨ *126*.

Cruise Control Light (Base Level)

The cruise control light is white when the cruise control is on and ready, and turns green when the cruise control is set and active.

See *Cruise Control* ⇨ *248*.

Adaptive Cruise Control Light

This light is white when the Adaptive Cruise Control (ACC, if equipped) is on and ready, and turns green when the ACC is set and active.

See *Adaptive Cruise Control (Advanced)* ⇨ *251*.

Cruise Control Light (Uplevel)

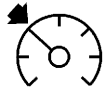

The cruise control light is white when the cruise control is on and ready, and turns green when the cruise control is set and active.

See *Cruise Control* ⇨ *248*.

Adaptive Cruise Control Light

This light is white when the Adaptive Cruise Control (ACC, if equipped) is on and ready, and turns green when the ACC is set and active.

Curve Speed Control Light

If equipped, this light may illuminate green when ACC is actively controlling the vehicle speed and detects a sharp curve on the road ahead.

ACC automatically slows the vehicle down while navigating the curve and may increase speed out of the curve, but will not exceed the set speed.

See *Adaptive Cruise Control (Advanced)* ⇨ *251*.

Super Cruise Light

This light comes on to show the status of Super Cruise. See *Super Cruise* ⇨ *260*.

Door Ajar Light

This light comes on when a door is open or not securely latched. Before driving, check that all doors are properly closed.

Information Displays

Driver Information Center (DIC) (Base Level)

The DIC is displayed in the instrument cluster. It shows the status of many vehicle systems.

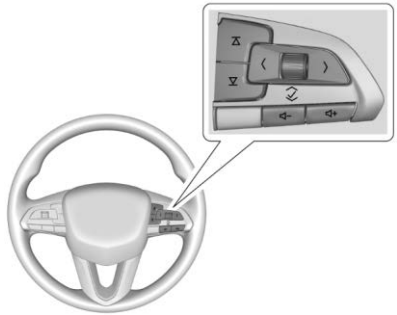

< or > : Press to move between the interactive display zones in the cluster. Press < to go back to the previous menu.

∧ or ∨ : Use the thumbwheel to scroll to the previous or next selection.

✓ : Press the thumbwheel to open a menu or select a menu item. Press and hold to reset values on certain screens.

Info Page Options

The info displays on the DIC can be turned on or off through the Options menu.

1. Press > to scroll to the Options menu. Use the thumbwheel to scroll to Info Pages and press the thumbwheel to select.
2. Scroll ∧ or ∨ to move through the list of possible info displays.
3. Press the thumbwheel while an item is highlighted to select or deselect that item.

The info pages can also be turned on or off through the DIC Info Page Options.

DIC Information Displays

The following is the list of all possible DIC information displays. Some of the information displays may not be available for your particular vehicle.

While in the Info Page Options menu, the info pages can be restored to the default factory settings by pressing and holding on the left steering wheel controls and the thumbwheel on the right steering wheel controls at the same time.

Speed : Shows the vehicle speed in either kilometers per hour (km/h) or miles per hour (mph).

Trip 1 or Trip 2 and Average Fuel Economy : The Trip display shows the current distance traveled, in either kilometers (km) or miles (mi), since the trip odometer was last reset. The trip odometer can be reset by pressing ✓ and selecting yes or no while this display is active.

The Average Fuel Economy display shows the approximate average liters per 100 kilometers (L/100 km) or miles per gallon (mpg). This number is calculated based on the number of L/100 km (mpg) recorded since the last time this menu item was reset. This number reflects only the approximate average fuel economy that the vehicle has right now, and will change as driving conditions change. The Average Fuel Economy can be reset by pressing ✓ and selecting yes or no while this display is active.

Fuel Range : Shows the approximate distance the vehicle can be driven without refueling. LOW will be displayed when the vehicle is low on fuel. The fuel range estimate is based on an average of the vehicle's fuel economy over recent driving history and the amount of fuel remaining in the fuel tank.

Oil Life : Shows an estimate of the oil's remaining useful life.
If REMAINING OIL LIFE 99% is displayed, that means 99% of the current oil life remains.

When the remaining oil life is low, the CHANGE ENGINE OIL SOON message will appear on the display. The oil should be changed as soon as possible. See *Engine Oil* ⇨ *312*. In addition to the engine oil life system monitoring the oil life, additional maintenance is recommended. See *Maintenance Schedule* ⇨ *380*.

The Oil Life display must be reset after each oil change. It will not reset itself. Do not reset the Oil Life display accidentally at any time other than when the oil has just been changed. It cannot be reset accurately until the next oil change. See *Engine Oil Life System* ⇨ *314*.

Air Filter Life : If equipped, Shows an estimate of the engine air filter's remaining useful life and the state of the system. Engine Air Filter Life 95% means 95% of the current air filter life remains. Messages will display based on the engine air filter life and the state of the system. When the REPLACE AT NEXT OIL CHANGE message displays, the engine air filter should be replaced at the time of the next oil change. When the REPLACE SOON message displays, the engine air filter should be replaced at the earliest convenience.

The Air Filter Life display must be reset after the engine air filter replacement. To reset, see *Engine Air Filter Life System* ⇨ *315*.

Brake Pad Life : If equipped, This displays an estimate of the remaining life of the front and rear brake pads. Messages will display based on brake pad wear and the state of the system. Reset the Brake Pad Life display after replacing the brake pads. See *Brake Pad Life System (If Equipped)* ⇨ *324*.

Tire Pressure : Shows the approximate pressures of all four tires. Tire pressure is displayed in either kilopascal (kPa) or in pounds per square inch (psi). If the pressure is low, the value for that tire is shown in amber. See *Tire Pressure Monitor System* ⇨ *348* and *Tire Pressure Monitor Operation* ⇨ *349*.

Fuel Economy : Displays average fuel economy, the best fuel economy over the selected distance, and a bar graph showing instantaneous fuel economy.

Average Speed : Displays the average vehicle speed of the vehicle in kilometers per hour (km/h) or miles per hour (mph). This average is based on the various vehicle speeds recorded since the last reset. Reset the average speed by pressing the thumbwheel while this display is active to show a confirmation window to select yes or no.

Timer : This display can be used as a timer. To start the timer, press the thumbwheel while this display is active. The display will show the amount of time that has passed since the timer was last reset. To stop the timer, press the thumbwheel briefly while this display is active and the timer is running.

Press the thumbwheel while this display is active to reset the timer.

Follow Distance/Gap Setting : When Adaptive Cruise Control (ACC) is not engaged, the current follow time to the vehicle ahead is displayed as a time value on this page. When ACC has been engaged, the display switches to the gap setting page. This page shows the current gap setting along with the vehicle ahead telltale.

Driver Assistance : If equipped, shows information for Lane Keep Assist (LKA) and Forward Collision Alert (FCA).

Battery Voltage : Shows the current battery voltage.

Coolant Temperature : Shows the engine coolant temperature in either degrees Celsius (°C) or degrees Fahrenheit (°F).

Oil Temperature : Shows the engine oil temperature in either degrees Celsius (°C) or degrees Fahrenheit (°F).

Engine Hours (Hourmeter) : Shows the total number of hours the engine has run. The display also shows the engine idle hours.

Engine Boost : Displays engine manifold pressure relative to ambient air pressure. It will display boost pressure generated by the turbocharging system.

Transmission Fluid Temperature : Shows the temperature of the automatic transmission fluid in either degrees Celsius (°C) or degrees Fahrenheit (°F).

Info Page Options : Scroll to choose which info pages appear on the DIC. Press the thumbwheel to select or deselect.

Blank Page : Allows for no information to be displayed in the cluster info display areas.

Driver Information Center (DIC) (Uplevel)

The DIC is displayed in the instrument cluster. It shows the status of many vehicle systems.

DIC information is broken down into two main zones:

Zone 1 : Displays on the instrument cluster to the left of the speedometer.

Zone 2 : Displays on the instrument cluster to the right of the speedometer.

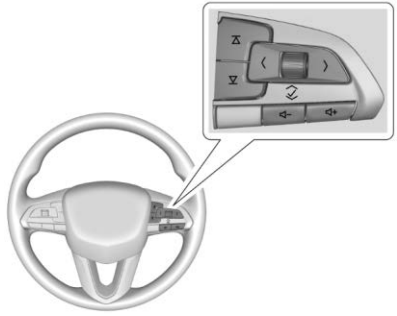

< or > : Press to move left or right between the interactive display zones in the cluster. Press the thumbwheel to select.

∧ or ∨ : Use the thumbwheel to scroll up or down in a list. Press the thumbwheel to select.

DIC Info Tiles Selection

The following is the list of all possible DIC Info Tiles. Depending on the vehicle, some may not be available.

Zone 1

Battery Voltage : Displays the current battery voltage. The battery voltage can fluctuate while viewing this information on the DIC. This is normal.

Coolant Temperature : Displays the coolant temperature in either degrees Celsius (°C) or degrees Fahrenheit (°F).

Engine Boost : If equipped, displays engine manifold pressure relative to ambient air pressure. It will display boost pressure generated by the turbocharging system.

Instantaneous Fuel Economy : Displays the current fuel economy in liters per 100 kilometers (L/100 km) or miles per gallon (mpg). This number reflects only the approximate fuel economy that the vehicle has right now and changes frequently as driving conditions change. This display cannot be reset.

Oil Pressure : Shows the current oil pressure in either kilopascal (kPa) or in pounds per square inch (psi).

Oil Temperature : Shows the current oil temperature in either degrees Celsius (°C) or degrees Fahrenheit (°F).

Time & Temperature : Displays the current time, and the current outside air temperature.

Tire Status : Shows individual tire pressures and overall temperature as either Cold, Cool, Normal,Warm, or Hot. Normal is typical for normal driving while Warm is typical for aggressive driving. Unknown may be displayed if tire temperature information is unavailable.

Wheel Slip : If equipped, the Wheel Slip display indicates how much the vehicle's driven wheels are slipping, as a percentage.

Transmission Fluid Temperature : If equipped, Shows the temperature of the transmission fluid in either degrees Celsius (°C) or degrees Fahrenheit (°F).

Lateral G-Force : If equipped, displays inertial forces being exerted on the vehicle in the lateral (side-to-side) direction as numerical value and as graphical depiction.

Zone 2

Trip 1 or 2/Average Speed/Average Fuel Economy : Trip displays the current distance traveled, in either kilometers (km) or miles (mi), since the trip odometer was last reset. The trip odometer can be reset by pressing and holding the thumbwheel while this display is active.

Average Speed displays the average speed of the vehicle in kilometers per hour (km/h) or miles per hour (mph). This average is calculated based on the various vehicle speeds recorded since the last reset of this value. The average speed can be reset by pressing and holding the thumbwheel while this display is active.

Average Fuel Economy displays the approximate average liters per 100 kilometers (L/100 km) or miles per gallon (mpg). This number is calculated based on the number of L/100 km (mpg) recorded since the last time this menu item was reset. This number reflects only the approximate average fuel economy that the vehicle has right now, and will change as driving conditions change. The Average Fuel Economy can be reset by pressing and holding the thumbwheel while this display is active.

Fuel Economy : Displays the average fuel economy, the best fuel economy over the selected distance, and a bar graph showing instantaneous fuel economy. Pressing the thumbwheel will open a menu to change the selected distance or reset the current values.

Trip Timer/Fuel Used : This display can be used as a timer. To start/stop the timer, press the thumbwheel while this display is active and then select the start/stop the timer. The display will show the amount of time that has passed since the timer was last reset. To reset the timer to zero, press the thumbwheel to access the menu while this display is active.

Fuel Used displays the approximate liters (L) or gallons (gal) of fuel that have been used since last reset. The fuel used can be reset by pressing the thumbwheel and selecting Reset Fuel Used in the menu.

Current Drive Cycle : Displays information in relation to the current drive cycle including Distance Traveled, Average Fuel Economy, and the Total Time. They will reset after the drive cycle is completed.

Driver Assistance : If equipped, displays the states of all active safety systems.

Oil Life : Displays an estimate of the oil's remaining useful life.
If REMAINING OIL LIFE 99% is displayed, that means 99% of the current oil life remains.

When the remaining oil life is low, the CHANGE ENGINE OIL SOON message will appear on the display. The oil should be changed as soon as possible. See *Engine Oil* ⇨ *312*. In addition to the engine oil life system monitoring the oil life, additional maintenance is recommended in the Maintenance Schedule. See the Maintenance Schedule booklet..

The Oil Life display must be reset after each oil change. It will not reset itself. Do not reset the Oil Life display accidentally at any time other than when the oil has just been changed. It cannot be reset accurately until the next oil change. See *Engine Oil Life System* ⇨ *314*.

Air Filter Life : If equipped, shows an estimate of the engine air filter's remaining useful life and the state of the system. Engine Air Filter Life 95% means 95% of the current air filter life remains. Messages will display based on the engine air filter life and the state of the system. When the REPLACE AT NEXT OIL CHANGE message displays, the engine air filter should be replaced at the time of the next oil change. When the REPLACE NOW message displays, the engine air filter should be replaced as soon as possible.

Engine Hours : Displays the total number of hours the engine has run. The display also shows the engine idle hours.

Lifetime Revs : The display also shows total engine revolutions divided by 10,000.

Brake Pad Life : If equipped, This displays an estimate of the remaining life of the front and rear brake pads. Messages will display based on brake pad wear and the state of the system. Reset the Brake Pad Life display after replacing the brake pads. See *Brake Pad Life System (If Equipped)* ⇨ *324*.

Head-Up Display (HUD)

⚠ Warning

If the HUD image is too bright or too high in your field of view, it may take you more time to see things you need to see when it is dark outside. Be sure to keep the HUD image dim and placed low in your field of view.

If equipped with HUD, some information concerning the operation of the vehicle is projected onto the windshield. The information is projected through the HUD lens on the driver side of the instrument panel and focused out toward the front of the vehicle.

Caution

If you try to use the HUD image as a parking aid, you may misjudge the distance and damage your vehicle. Do not use the HUD image as a parking aid.

The HUD information can be displayed in various languages. The speedometer reading and other numerical values can be displayed in either English or metric units.

The language selection is changed through the radio and the units of measurement is changed through the instrument cluster. See *Settings* ⇨ *176* and "Options" under *Instrument Cluster (Base Level)* ⇨ *88* or *Instrument Cluster (Uplevel)* ⇨ *90*.

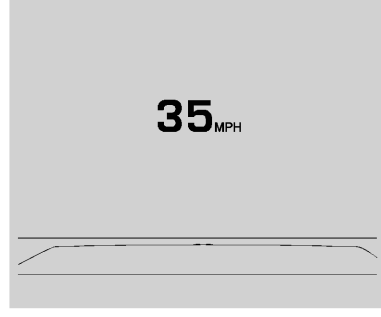

HUD Display on the Windshield

The HUD may display some of the following vehicle information and vehicle messages or alerts:

- Speed
- Audio
- Phone
- Navigation
- Performance
- Driver Assistance Features
- Vehicle Messages

Some vehicle messages or alerts displayed in the HUD may be cleared by using the steering wheel controls. See *Vehicle Messages* ⇨ *116*.

The HUD control is to the left of the steering wheel.

To adjust the HUD image:

1. Adjust the driver seat.
2. Start the engine.
3. Use the following settings to adjust the HUD.

HUD **:** Press or lift to center the HUD image. The HUD image can only be adjusted up and down, not side to side.

INFO **:** Press to select the display view. Each press will change the display view.

±☼ **:** Lift and hold to brighten the display. Press and hold to dim the display. Continue to hold to turn the display off.

The HUD image will automatically dim and brighten to compensate for outside lighting. The HUD brightness control can also be adjusted as needed.

The HUD image can temporarily light up depending on the angle and position of sunlight on the HUD display. This is normal.

Polarized sunglasses could make the HUD image harder to see.

Head-Up Display (HUD) Rotation Option

This feature allows for adjusting the angle of the HUD image.

Press the thumbwheel on the steering wheel controls while Head-Up Display Rotation is highlighted to enter Main View. From Main View, press the thumbwheel to enter the Adjust Menu. Press ∧ or ∨ to adjust the angle of the HUD display. Press < or > to highlight OK, then press the thumbwheel to save the setting. CANCEL can also be selected to cancel the setting. The vehicle must be in P (Park). See *Instrument Cluster (Base Level)* ⇨ *88* or *Instrument Cluster (Uplevel)* ⇨ *90*.

HUD Views

There are three views in the HUD. Track mode is available for V-Series only. Some vehicle information and vehicle messages or alerts may be displayed in any view.

Metric

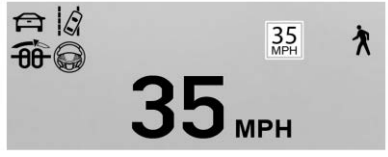

English

Speed View : This displays digital speed in English or metric units, speed limit, vehicle ahead indicator, Lane Departure Warning/Lane Keep Assist, and Adaptive Cruise Control and set speed. Some information only appears on vehicles that have these features, and when they are active.

Metric

English

Performance View : This displays digital speed, indicators from speed view along with rpm reading, vehicle ahead indicator, Lane Departure Warning/Lane Keep Assist, and Adaptive Cruise Control and set speed.

Metric

English

Track View : If equipped, this displays digital speed, transmission positions, Shift Timing Light Position, gear shift indicator,

The shift timing lights at the top of the display will appear with increases in engine rpm. The rows of lights get closer together as the shift point gets closer. Shift the transmission before the lights come together in the display. Shift immediately if the lights are flashing. See *Manual Mode (Electronic Shifter)* ⇨ *235* or *Manual Mode (Mechanical Shifter)* ⇨ *234*.

Temporary Overlays

Infotainment: Audio, Phone, and Navigation are temporary overlays linked to cluster layouts, and are also manually selectable.

Metric

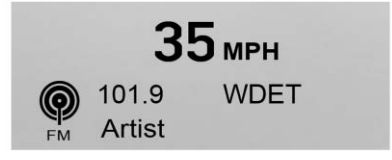

English

Audio/Phone Overlay : This displays digital speed for Tour/ Sport, current gear for Track, indicators from speed view along with audio/phone information. The current radio station, media type, and incoming calls will be displayed.

All HUD views may briefly display audio information when the driver uses the steering wheel controls to adjust the audio settings appearing in the instrument cluster.

Incoming phone calls appearing in the instrument cluster may also display in any HUD view.

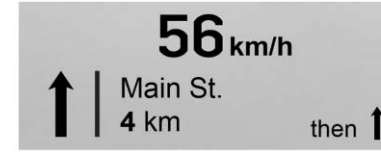

Metric

English

Navigation Overlay : This displays digital speed for Tour/ Sport, current gear for Track, indicators from speed view along with Turn-by-Turn Navigation information in some vehicles. The compass heading is displayed when navigation routing is not active.

Navigation Turn-by-Turn Alerts shown in the instrument cluster may also be displayed in any HUD view.

Care of the HUD

Clean the inside of the windshield to remove any dirt or film that could reduce the sharpness or clarity of the HUD image.

Clean the HUD lens with a soft cloth sprayed with glass cleaner. Wipe the lens gently, then dry it.

HUD Troubleshooting

If you cannot see the HUD image when the ignition is on, check that:

- Nothing is covering the HUD lens.
- The HUD brightness setting is not too dim or too bright.
- The HUD is adjusted to the proper height.
- Polarized sunglasses are not worn.
- The windshield and HUD lens are clean.

If the HUD image is not correct, contact your dealer.

The windshield is part of the HUD system. If windshield replacement is required, see *Windshield Replacement* ⇨ *328*.

Vehicle Messages

Messages displayed on the Driver Information Center (DIC) indicate the status of the vehicle or some action that may be needed to correct a condition. Multiple messages may appear one after another.

The messages that do not require immediate action can be acknowledged and cleared by pressing the thumbwheel. The messages that require immediate action cannot be cleared until that action is performed.

All messages should be taken seriously; clearing the message does not correct the problem.

If a SERVICE message appears, see your dealer.

Follow the instructions given in the messages. The system displays messages regarding the following topics:

- Service Messages
- Fluid Levels
- Vehicle Security
- Brakes
- Steering
- Ride Control Systems
- Driver Assistance Systems
- Cruise Control
- Lighting and Bulb Replacement
- Wiper/Washer Systems
- Doors and Windows
- Seat Belts
- Airbag Systems
- Engine and Transmission
- Tire Pressure
- Battery

Engine Power Messages

REDUCED ACCELERATION DRIVE WITH CARE

This message displays when the vehicle's propulsion power is reduced. A reduction in propulsion power can affect the vehicle's ability to accelerate. If this message is on, but there is no observed reduction in performance, proceed to your destination. Under certain conditions the performance may be reduced the next time the vehicle is driven. The vehicle may be driven while this message is on, but maximum acceleration and speed may be reduced. Anytime this message stays on, or displays repeatedly, the vehicle should be taken to your dealer for service as soon as possible.

Under certain operating conditions, propulsion will be disabled. Try restarting after the ignition has been off for two minutes.

Vehicle Speed Messages

SPEED LIMITED TO XXX KM/H (MPH)

This message shows that the vehicle speed has been limited to the speed displayed. The limited speed is a protection for various propulsion and vehicle systems, such as lubrication, thermal, brakes, suspension, Teen Driver if equipped, or tires.

Vehicle Personalization

The following are all possible vehicle personalization features. Depending on the vehicle, some may not be available.

For System, Apps, and Personal features and functions, see *Settings* ⇨ *176*.

To access the vehicle personalization menu:

1. Touch the Settings icon on the Home Page of the infotainment display.
2. Touch Vehicle to display a list of available options.
3. Touch to select the desired feature setting.
4. Touch ◯ or | to turn a feature off or on.
5. Touch ✕ to go to the top level of the Settings menu.

The menu may contain the following:

Rear Seat Reminder

This allows for a chime and a message when the rear door has been opened before or during operation of the vehicle.

Touch Off or On.

Buckle to Drive

This feature can prevent shifting out of Park when the driver, and if applicable the front passenger, seat belt is not buckled. See *Buckle To Drive* ⇨ *41*.

Touch Off or On.

Driver Mode Customization

Touch and the following may display:

- My Mode
- V-Mode

- Visualization

My Mode

Touch and the following may display:

- Engine Sound
- Steering
- Suspension
- Brake Feel

For information on the range of settings, see “Driver Mode Customization” in *Driver Mode Control* ⇨ *241*.

V-Mode

Touch and the following may display:

- Engine Sound
- Steering
- Suspension
- Brake Feel
- Powertrain

For information on the range of settings, see “Driver Mode Customization” in *Driver Mode Control* ⇨ *241*.

Visualization

This setting shows handling and performance settings on the infotainment display when changing drive modes.

Touch Off or On.

Climate and Air Quality

Touch and the following may display:

- Auto Fan Speed
- Air Quality Sensor
- Auto Cooled Seats
- Auto Heated Seats
- Auto Defog
- Auto Rear Defog
- Ionizer

Auto Fan Speed

This setting specifies the amount of airflow when the climate control fan setting is Auto Fan.

Touch Low, Medium, or High.

Air Quality Sensor

This setting switches the system into Recirculation Mode based on the quality of the outside air.

Touch Off, Low Sensitivity, or High Sensitivity.

Auto Cooled Seats

This setting automatically turns on and regulates the ventilated seats when the cabin temperature is warm. See *Heated and Ventilated Front Seats* ⇨ *37*.

Touch Off or On.

Auto Heated Seats

This setting automatically turns on and regulates the heated seats when the cabin temperature is cool. The auto heated seats can be turned off by using the heated seat buttons on the center stack. See *Heated and Ventilated Front Seats* ⇨ *37*.

If equipped with auto heated steering wheel, this feature will turn on when the auto heated seats turn on.

Touch Off or On.

Auto Defog

This setting automatically turns the front defogger on when the engine is started.

Touch Off or On.

Auto Rear Defog

This setting automatically turns the rear defogger on when the engine is started.

Touch Off or On.

Ionizer

If equipped and on, this feature helps clean the air inside the vehicle and remove contaminants such as pollen, odors, and dust. See *Dual Automatic Climate Control System* ⇨ *196*.

Touch Off or On.

Collision / Detection Systems

Touch and the following may display:

- Alert Type
- Forward Collision System
- Front Pedestrian Detection
- Adaptive Cruise Go Notifier
- Lane Change Alert
- Rear Camera Park Assist Symbols
- Rear Cross Traffic Alert
- Super Cruise Lane Change

Alert Type

This setting specifies the type of vehicle feedback provided, either a beep or seat vibration, when you are in danger of colliding with an object.

Touch Beeps or Safety Alert Seat.

Forward Collision System

This setting can alert of a potential crash with a detected vehicle ahead and can apply brakes to help reduce a collision's severity.

Touch Off, Alert, or Alert and Brake.

Front Pedestrian Detection

This feature may help avoid or reduce the harm caused by front-end crashes with nearby pedestrians.

See *Front Pedestrian Braking (FPB) System* ⇨ *287*.

Touch Off, Alert, or Alert and Brake.

Adaptive Cruise Go Notifier

This setting determines if an alert will appear when Adaptive Cruise Control brings the vehicle to a complete stop and the vehicle ahead of you starts moving again. See *Adaptive Cruise Control (Advanced)* ⇨ *251*.

Touch Off or On.

Lane Change Alert

This setting specifies if an alert will display on the outside mirror to help you avoid crashing into a vehicle in your blind spot, or rapidly approaching your blind spot, during a lane change maneuver. See *Lane Change Alert (LCA)* ⇨ *289*.

Touch Off or On.

Rear Camera Park Assist Symbols

This setting enables the Rear Camera Park Assist Symbols. See *Assistance Systems for Parking or Backing* ⇨ *277*.

Touch Off or On.

Rear Cross Traffic Alert

This setting specifies if an alert will display when the vehicle detects approaching rear cross traffic when in R (Reverse). See *Assistance Systems for Parking or Backing* ⇨ *277*.

Touch Off or On.

Super Cruise Lane Change

When on, the vehicle can change lanes while Super Cruise is active. The vehicle will only steer to change lanes when traffic allows .

Touch Off or On.

Comfort and Convenience

Touch and the following may display:

- Chime Volume
- Reverse Tilt Mirror
- Remote Mirror Folding
- Rain Sense Wipers

Chime Volume

This setting determines the chime volume level.

Touch the controls on the infotainment display to adjust the volume.

Reverse Tilt Mirror

When on, the driver, passenger, or both driver and passenger outside mirrors will tilt downward when the vehicle is shifted into R (Reverse) to improve visibility of the ground near the rear wheels. They may move from their tilted position when the vehicle is shifted out of R (Reverse) or turned off. See *Reverse Tilt Mirrors* ⇨ *25*.

Touch Off, On - Driver and Passenger, On - Driver, or On - Passenger.

Remote Mirror Folding

This setting adjusts the outside mirrors when locking and unlocking the vehicle. Press 🔒 on the remote key or lock button on the door handle to fold the mirrors in. Press 🔓 on the remote key or unlock button on the door handle to unfold the mirrors. See *Folding Mirrors* ⇨ *24*.

Touch Off or On.

Rain Sense Wipers

This setting automatically turns on the wipers when moisture is detected and the wiper switch is in intermittent mode.

Touch Disabled or Enabled.

Lighting

Touch and the following may display:

- Vehicle Locator Lights
- Exit Lighting

Vehicle Locator Lights

This setting flashes the headlamps of your vehicle when you press 🔓 on the remote key.

Touch Off or On.

Exit Lighting

This setting specifies how long the headlamps stay on after the vehicle is turned off and exited.

Touch Off, 30 Seconds, 60 Seconds, or 120 Seconds.

Power Door Locks

Touch and the following may display:

- Auto Door Unlock
- Delayed Door Lock

Auto Door Unlock

This setting allows selection of which doors will automatically unlock when the vehicle is shifted into P (Park).

Touch Off, All Doors, or Driver Door.

Delayed Door Lock

This setting delays the locking of the vehicle's doors.

Touch Off or On.

Remote Lock, Unlock, and Start

Touch and the following may display:

- Remote Unlock Light Feedback
- Remote Lock Feedback
- Remote Door Unlock
- Remote Start Auto Cool Seats
- Remote Start Auto Heat Seats
- Remote Window Operation
- Passive Door Unlock
- Passive Door Lock
- Remote Left in Vehicle Alert
- Remote Removed from Vehicle Alert

Remote Unlock Light Feedback

This setting flashes the exterior lamps when the vehicle is unlocked with the remote key.

Touch Off or Flash Lights.

Remote Lock Feedback

This setting specifies how the vehicle responds when the vehicle is locked with the remote key.

Touch Off, Lights and Horn, Lights Only, or Horn Only.

Remote Door Unlock

This setting specifies whether all doors, or just the driver door, unlock when pressing 🔓 on the remote key.

Touch All Doors or Driver Door.

Remote Start Auto Cool Seats

This setting automatically turns on the ventilated seats when using the remote start function on warm days. See *Heated and Ventilated Front Seats* ⇨ *37* and *Remote Vehicle Start* ⇨ *13*.

Touch Off or On.

Remote Start Auto Heat Seats

This setting automatically turns on the heated seats when using the remote start function on cold days. See *Heated and Ventilated Front Seats* ⇨ *37* and *Remote Vehicle Start* ⇨ *13*.

If equipped with Auto Heated Steering Wheel, this feature will turn on when the Remote Start Auto Heated Seats turn on.

Touch Off or On.

Remote Window Operation

If equipped, this feature enables remote operation of the windows with the remote key. See *Remote Keyless Entry (RKE) System Operation* ⇨ *7*.

Touch Off or On.

Passive Door Unlock

This setting specifies which doors unlock when using the button on the driver door handle to unlock the vehicle.

Touch All Doors or Driver Door Only.

Passive Door Lock

This setting specifies if the vehicle will automatically lock, or lock and provide an alert after all the doors are closed, and you walk away from the vehicle with the remote key. See *Remote Keyless Entry (RKE) System Operation* ⇨ *7*.

Touch Off, On with Horn Chirp, or On.

Remote Left in Vehicle Alert

This feature sounds an alert when the remote key is left in the vehicle. This menu also enables Remote No Longer in Vehicle Alert.

Touch Off or On.

Remote Removed from Vehicle Alert

This feature beeps the horn three times when exiting a running vehicle with the remote key.

Touch Off or On.

Seating Position

Touch and the following may display:

- Seat Entry Memory
- Seat Exit Memory

Seat Entry Memory

This feature automatically recalls the previously stored 1 or 2 button positions when the ignition is changed from off to on or ACC/ACCESSORY. See *Memory Seats* ⇨ *34*.

Touch Off or On.

Seat Exit Memory

This feature automatically recalls the previously stored exit button positions when the ignition is changed from on or ACC/ACCESSORY to off if the driver door is open or opened. See *Memory Seats* ⇨ *34*.

Touch Off or On.

Teen Driver

See “Teen Driver” under *Settings* ⇨ *176*.

Valet Mode

This will lock the infotainment system and steering wheel controls. It may also limit access to vehicle storage locations, if equipped.

To enable valet mode:

1. Enter a four-digit code on the keypad.
2. Touch Enter to go to the confirmation screen.
3. Re-enter the four-digit code.

Touch Lock or Unlock to lock or unlock the system. Touch Back to go back to the previous menu.

Universal Remote System

See *Radio Frequency Statement* ⇨ *409*.

Universal Remote System Programming

If equipped, these buttons are in the overhead console.

This system can replace up to three remote control transmitters used to activate devices such as garage door openers, security systems, and home automation devices. These instructions refer to a garage door opener, but can be used for other devices.

Do not use the Universal Remote system with any garage door opener that does not have the stop and

reverse feature. This includes any garage door opener model manufactured before April 1, 1982.

Read these instructions completely before programming the Universal Remote system. It may help to have another person assist with the programming process.

Keep the original hand-held transmitter for use in other vehicles as well as for future programming. Erase the programming when vehicle ownership is terminated. See “Erasing Universal Remote System Buttons” later in this section.

To program a garage door opener, park outside directly in line with and facing the garage door opener receiver. Clear all people and objects near the garage door.

Make sure the hand-held transmitter has a new battery for quick and accurate transmission of the radio-frequency signal.

Programming the Universal Remote System

For questions or programming help, see www.homelink.com/gm or call 1-800-355-3515. For calls placed outside the U.S., Canada, or Puerto Rico, international rates will apply and may differ based on landline or mobile phone.

Programming involves time-sensitive actions, and may time out causing the procedure to be repeated.

To program up to three devices:

1. Hold the end of the hand-held transmitter about 3 to 8 cm (1 to 3 in) away from the Universal Remote system buttons with the indicator light in view. The hand-held transmitter was supplied by the manufacturer of the garage door opener receiver.
2. At the same time, press and hold both the hand-held transmitter button and one of the three Universal Remote system buttons to be used to operate the garage door. Do not release either button until the indicator light changes from a slow to a rapid flash. Then release both buttons.

   Some garage door openers may require substitution of Step 2 with the procedure under “Radio Signals for Some Gate Operators” later in this section.
3. Press and hold the newly programmed Universal Remote system button for five seconds while watching the indicator light and garage door activation.
   - If the indicator light stays on continuously or the garage door moves when the button is pressed, then programming is complete. There is no need to complete Steps 4–6.
   - If the indicator light does not come on or the garage door does not move, a second button press may be required. For a second time, press and hold the newly programmed button for five seconds. If the light stays on or the garage door moves, programming is complete.

- If the indicator light blinks rapidly for two seconds, then changes to a solid light and the garage door does not move, continue with programming Steps 4–6.

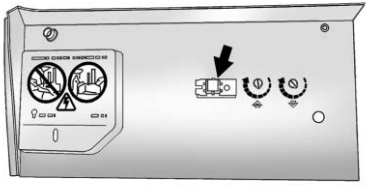

Learn or Smart Button

4. After completing Steps 1–3, locate the Learn or Smart button inside garage on the garage door opener receiver. The name and color of the button may vary by manufacturer.
5. Press and release the Learn or Smart button. Step 6 must be completed within 30 seconds of pressing this button.
6. Inside the vehicle, press and hold the newly programmed Universal Remote system button for two seconds and then release it.

   If the garage door does not move or the lamp on the garage door opener receiver does not flash, press and hold the same button a second time for two seconds, then release it. Again, if the door does not move or the garage door lamp does not flash, press and hold the same button a third time for two seconds, then release it.

The Universal Remote system should now activate the garage door.

Repeat the process for programming the two remaining buttons.

Radio Signals for Some Gate Operators

For questions or programming help, see www.homelink.com/gm or call 1-800-355-3515. For calls placed outside the U.S., Canada, or Puerto Rico, international rates will apply and may differ based on landline or mobile phone.

Some gate operators and radio-frequency laws require transmitter signals to time out or quit after several seconds of transmission. This may not be long enough for the Universal Remote system to pick up the signal during programming.

If the programming did not work, replace Step 2 under “Programming the Universal Remote System” with the following:

Press and hold the Universal Remote system button while pressing and releasing the hand-held transmitter button every two seconds until the signal has been successfully accepted by the Universal Remote system. The Universal Remote system indicator light will flash slowly at first and then rapidly. Proceed with Step 3 under “Programming the Universal Remote System” to complete.

Universal Remote System Operation

Using the Universal Remote System

Press and hold the appropriate Universal Remote system button for at least one-half second. The indicator light will come on while the signal is being transmitted.

Erasing Universal Remote System Buttons

Erase all programmed buttons when vehicle ownership is terminated.

To erase:

1. Press and hold the two outside buttons until the indicator light begins to flash. This should take about 10 seconds.
2. Release both buttons.

Reprogramming a Single Universal Remote System Button

To reprogram any of the system buttons:

1. Press and hold any one of the buttons. Do not release the button.
2. The indicator light will begin to flash after 20 seconds. Without releasing the button, proceed with Step 1 under “Programming the Universal Remote System.”

Lighting

Exterior Lighting

Exterior Lamp Controls 126
Exterior Lamps Off Reminder ... 128
Headlamp High/Low-Beam Changer 128
Flash-to-Pass 128
Daytime Running Lamps (DRL) 128
Automatic Headlamp System ... 128
Hazard Warning Flashers 129
Turn and Lane-Change Signals 129
Cornering Lamps 130

Interior Lighting

Instrument Panel Illumination Control 130
Courtesy Lamps 130
Dome Lamps 130
Reading Lamps 131

Lighting Features

Entry Lighting 131
Exit Lighting 132
Battery Load Management 132
Battery Power Protection 133
Exterior Lighting Battery Saver 133

Exterior Lighting

Exterior Lamp Controls

The exterior lamp control is on the turn signal lever.

Turn the control to the following positions:

⏻ **:** Turns the exterior lamps off and deactivates the AUTO mode. Turn to ⏻ again to reactivate the AUTO mode.

In Canada, the headlamps will automatically reactivate when the vehicle is shifted out of P (Park).

AUTO : Automatically turns the exterior lamps on and off, depending on outside lighting.

: Turns on the parking lamps including all lamps, except the headlamps.

: Turns on the headlamps together with the parking lamps and instrument panel lights.

IntelliBeam System

If equipped, this system turns the vehicle's high-beam headlamps on and off according to surrounding traffic conditions.

The system turns the high-beam headlamps on when it is dark enough and there is no other traffic present.

This light comes on in the instrument cluster when the IntelliBeam system is enabled.

Turning On and Enabling IntelliBeam

To enable the IntelliBeam system, press ⊜Ⓐ on the turn signal lever when it is dark outside and the exterior lamp control is in AUTO or ≣D.

Driving with IntelliBeam

The system only activates the high beams when driving over 40 km/h (25 mph).

The blue high-beam on light appears on the instrument cluster when the high beams are on.

There is a sensor near the top center of the windshield that automatically controls the system. Keep this area of the windshield clear of debris to allow for best system performance.

The high-beam headlamps remain on, under the automatic control, until one of the following situations occurs:

- The system detects an approaching vehicle's headlamps.
- The system detects a preceding vehicle's taillamps.
- The outside light is bright enough that high-beam headlamps are not required.
- The vehicle's speed drops below 20 km/h (12 mph).
- The IntelliBeam system is disabled by the button on the turn signal lever. If this happens, press ⊜Ⓐ on the turn signal lever when the exterior lamp control is in the AUTO or ≣D position to reactivate the IntelliBeam system. The instrument cluster light will come on to indicate the IntelliBeam system is reactivated.

The high beams may not turn off automatically if the system cannot detect another vehicle's lamps because of any of the following:

- The other vehicle's lamps are missing, damaged, obstructed from view, or otherwise undetected.
- The other vehicle's lamps are covered with dirt, snow, and/or road spray.
- The other vehicle's lamps cannot be detected due to dense exhaust, smoke, fog, snow, road spray, mist, or other airborne obstructions.
- The vehicle's windshield is dirty, cracked, or obstructed by something that blocks the view of the light sensor.
- The vehicle is loaded such that the front end points upward, causing the light sensor to aim high and not detect headlamps and taillamps.
- The vehicle is being driven on winding or hilly roads.

The automatic high-beam headlamps may need to be disabled if any of the above conditions exist.

Exterior Lamps Off Reminder

A warning chime sounds if the driver door is opened while the ignition is off and the exterior lamps are on.

Headlamp High/Low-Beam Changer

: Push the turn signal lever away from you and release, to turn the high beams on. To return to low beams, push the lever again or pull it toward you and release.

This indicator light turns on in the instrument cluster when the high-beam headlamps are on.

Flash-to-Pass

To flash the high beams, pull the turn signal lever toward you, and release.

Daytime Running Lamps (DRL)

DRL can make it easier for others to see the front of your vehicle during the day. Fully functional DRL are required on all vehicles first sold in Canada.

If equipped, the DRL will come on when all of the following conditions are met:

- The ignition is on.
- The exterior lamp control is in AUTO.
- The light sensor determines it is daytime.

The DRL turn off when the headlamps are turned to ⏻ or the ignition is off.

For vehicles first sold in Canada, the DRL can only be turned off when the vehicle is parked.

Automatic Headlamp System

When the exterior lamp control is set to AUTO and it is dark enough outside, the headlamps come on automatically.

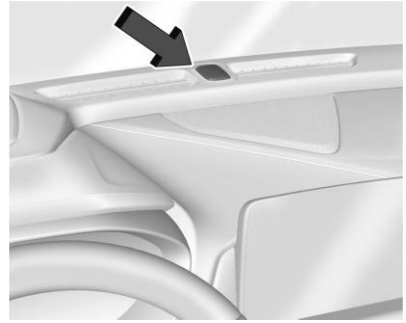

The light sensor is on top of the instrument panel or on the windshield near the rearview mirror. Do not cover the sensor, otherwise the headlamps will come on when they are not needed.

The system may also turn on the headlamps when driving through a parking garage or tunnel.

If the vehicle is started in a dark garage, the automatic headlamp system comes on immediately. If it is light outside when the vehicle leaves the garage, there is a slight delay before the automatic headlamp system turns off the headlamps. During that delay, the instrument cluster may not be as bright as usual. Make sure the instrument panel brightness control is in the full bright position. See *Instrument Panel Illumination Control* ⇨ *130*.

When it is bright enough outside, the headlamps will turn off.

The automatic headlamp system turns off when the exterior lamp control is turned to ⏻ or the ignition is off. For vehicles sold in Canada, this control only works when the transmission is in P (Park).

Lights On with Wipers

If the windshield wipers are activated in daylight with the engine on, and the exterior lamp control is in AUTO, the headlamps, parking lamps, and other exterior lamps come on. The transition time for the lamps coming on varies based on wiper speed. When the wipers are not operating, these lamps turn off. Move the exterior lamp control to ⏻ or ≋ to disable this feature.

Hazard Warning Flashers

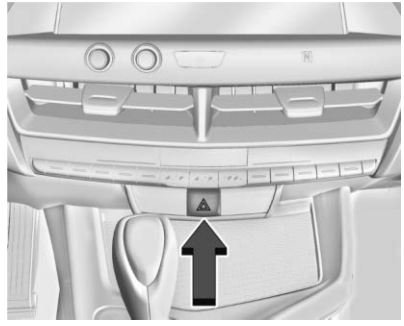

⚠ **:** Press this button to make the front and rear turn signal lamps flash on and off. Release the button for at least one second and press again to turn the flashers off.

The hazard warning flashers turn on automatically if the airbags deploy.

Turn and Lane-Change Signals

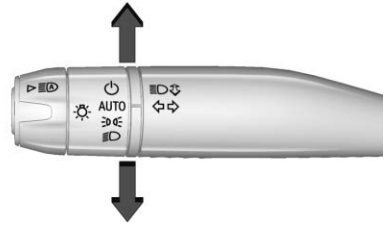

Move the lever all the way up or down to signal a turn.

An arrow on the instrument cluster flashes in the direction of the turn or lane change.

Raise or lower the lever until the arrow starts to flash to signal a lane change. Hold it there until the lane change is completed. If the lever is briefly pressed and released, the turn signal flashes three times.

The turn and lane-change signal can be turned off manually by moving the lever back to its original position.

If after signaling a turn or lane change, the arrow flashes rapidly or does not come on, a signal function may be inoperative. This vehicle may be equipped with LED lighting. For replacement of any LED lighting, contact your dealer.

Cornering Lamps

If equipped with cornering lamps, they automatically come on when all of the following occur:

- The low-beam headlamps are on.
- The turn signals are activated or the steering wheel is at a turning angle.
- The vehicle speed is below 40 km/h (25 mph) .

Interior Lighting

Instrument Panel Illumination Control

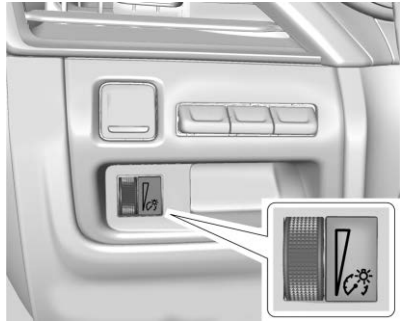

This feature adjusts the brightness of all illuminated controls.

: Move the thumbwheel up or down to brighten or dim the lights.

The thumbwheel is functional at night, or when the headlamps or parking lamps are ON.

The brightness of the displays automatically adjusts based on outdoor lighting. The instrument panel illumination control will set the lowest level to which the displays will automatically be adjusted.

Courtesy Lamps

The courtesy lamps come on when any door is opened, on the remote key is pressed, or when the ignition is switched off. See *Dome Lamps* ⇨ *130*.

Dome Lamps

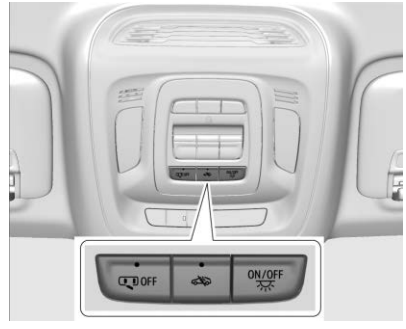

The dome lamp controls are in the overhead console.

To operate, press the following buttons:

OFF : Press to turn off the dome lamps when any door is opened, on the remote key is pressed, or when the ignition is switched off. An indicator light on the button will turn on when the dome lamp override is activated. Press OFF again to deactivate this feature and the indicator light will turn off. The dome lamps will come on when doors are opened, on the remote key is pressed, or the ignition is switched off.

ON/OFF : Press to turn the dome lamps on and off manually.

Reading Lamps

There are front and rear reading lamps on the overhead console and over the rear passenger doors. These lamps will come on when any door is opened, on the remote key is pressed, or when the ignition is switched off.

To operate, the ignition must be on, or in ACC/ACCESSORY, or using Retained Accessory Power (RAP).

To manually turn the reading lamps on or off:

Press the lamp lenses on the front reading lamps.

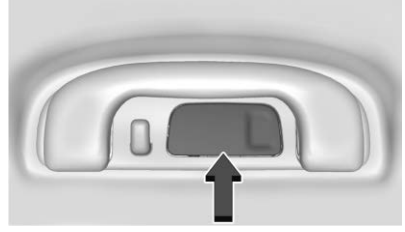

Press the lamp lenses over the rear passenger doors.

Lighting Features

Entry Lighting

Some exterior lamps turn on briefly at night, or in areas with limited lighting, when is pressed on the remote key, see *Remote Keyless Entry (RKE) System Operation* ⇨ *7*. After about 30 seconds the exterior lamps turn off. Entry lighting can be disabled manually by turning the ignition on or to ACC/ACCESSORY, or by pressing on the remote key. When any door is opened or remote unlock pressed, all interior lights turn on and then interior lamps dim to off after 20 seconds after all doors are closed.

The entry lighting feature for exterior lighting can be changed. See “Vehicle Locator Lights” under *Vehicle Personalization* ⇨ *117*.

Entry Lighting with Approach Detection

If equipped with approach detection, the entry lighting feature will automatically turn on when the remote key is detected within approximately 2 m (6 ft) of the vehicle.

If the vehicle has remained parked for an extended period of time with no remote key use or Keyless Access operation, approach detection will be disabled. To reactivate, press any button on the remote key or open and close all vehicle doors to re-enable the entry lighting feature on approach.

Approach detection will not work if:

- The vehicle battery is low.
- The ignition is on or in ACC/ ACCESSORY.
- Entry lighting is set to Off. See "Vehicle Locator Lights" under *Vehicle Personalization* ⇨ *117*.

Approach detection will not work with a single remote key if:

- The remote key is left within a 5 m (16 ft) range of the vehicle for several minutes
- The remote key is left inside the vehicle and all the doors are closed

To help maximize remote key battery life, do not store the remote key within 5 m (16 ft) of the vehicle.

Exit Lighting

Some exterior lamps come on at night, or in areas with limited lighting, when the driver door is opened after the ignition is turned off.

The dome lamp comes on after the ignition is turned off or any door is opened. The exterior lamps and dome lamp remain on after the door is closed for a set amount of time, then automatically turn off.

The exterior lamps turn off immediately by turning the exterior lamp control off.

The exit lighting for exterior lights can be changed. See *Vehicle Personalization* ⇨ *117*.

Battery Load Management

The vehicle has Electric Power Management (EPM), which estimates the battery's temperature and state of charge. It then adjusts the voltage for best performance and extended life of the battery.

When the battery's state of charge is low, the voltage is raised slightly to quickly bring the charge back up. When the state of charge is high, the voltage is lowered slightly to prevent overcharging. If the vehicle has a voltmeter gauge or a voltage display on the Driver Information Center (DIC), you may see the voltage move up or down. This is normal. If there is a problem, an alert will be displayed.

The battery can be discharged at idle if the electrical loads are very high. This is true for all vehicles. This is because the generator (alternator) may not be spinning fast enough at idle to produce all the power that is needed for very high electrical loads.

A high electrical load occurs when several of the following are on, such as: headlamps, high beams, fog lamps, rear window defogger, climate control fan at high speed, heated seats, engine cooling fans, and loads plugged into accessory power outlets.

EPM works to prevent excessive discharge of the battery. It does this by balancing the generator's output and the vehicle's electrical needs. It can increase engine idle speed to generate more power, whenever needed. It can temporarily reduce the power demands of some accessories.

Normally, these actions occur in steps or levels, without being noticeable. In rare cases at the highest levels of corrective action, this action may be noticeable to the driver. If so, a DIC message might be displayed. If a battery message is displayed, it is recommended that the driver reduce the electrical loads as much as possible. See *Driver Information Center (DIC) (Base Level)* ⇨ *107* or *Driver Information Center (DIC) (Uplevel)* ⇨ *110*.

Battery Power Protection

The battery saver feature is designed to protect the vehicle's battery.

If some interior lamps are left on and the ignition is turned off, the battery rundown protection system automatically turns the lamp off after some time.

Exterior Lighting Battery Saver

The exterior lamps turn off about 10 minutes after the ignition is turned off, if the parking lamps or headlamps have been manually left on. This protects against draining the battery. To restart the 10-minute timer, turn the exterior lamp control to the ⏻ position and then back to the 🚗 or 🔆 position.

To keep the lamps on for more than 10 minutes, the ignition must be on or in ACC/ACCESSORY.

Infotainment System

Introduction
Introduction 134
Overview 135
Steering Wheel Controls 137
Using the System 137
Software Updates 140

Radio
AM-FM Radio 141
HD Radio Technology 143
Radio Data System (RDS) 143
Satellite Radio 144
Radio Reception 144
Multi-Band Antenna 145

Audio Players
Avoiding Untrusted Media Devices 145
USB Port 145
Bluetooth Audio 148

OnStar System
OnStar System 149

Navigation
Using the Navigation System 150
Maps 153
Navigation Symbols 154
Destination 155
OnStar System 160
Global Positioning System (GPS) 161
Vehicle Positioning 162
Problems with Route Guidance 162
If the System Needs Service 163
Map Data Updates 163
Database Coverage Explanations 163

Voice Recognition
Voice Recognition 163

Phone
Bluetooth (Overview) 169
Bluetooth (Pairing and Using a Phone) 170
Apple CarPlay and Android Auto 174

Settings
Settings 176
Teen Driver 184

Trademarks and License Agreements
Trademarks and License Agreements 187

Introduction

Read the following pages to become familiar with the features.

⚠ Warning

Taking your eyes off the road for too long or too often while using any infotainment feature can cause a crash. You or others could be injured or killed. Do not give extended attention to infotainment tasks while driving. Limit your glances at the vehicle displays and focus your attention on driving. Use voice commands whenever possible.

The infotainment system has built-in features intended to help avoid distraction by disabling some features when driving. These features may gray out when they are unavailable. Many infotainment features are also available through the instrument cluster and steering wheel controls.

Before driving:

- Become familiar with the operation, center stack controls, steering wheel controls, and infotainment display.

- Set up the audio by presetting favorite stations, setting the tone, and adjusting the speakers.
- Set up phone numbers in advance so they can be called easily by pressing a single control or by using a single voice command.

See *Distracted Driving* ⇨ *203*.

Active Noise Cancellation (ANC)

If equipped, ANC reduces engine noise in the vehicle's interior. ANC requires the factory-installed audio system, radio, speakers, amplifier (if equipped), induction system, and exhaust system to work properly. Deactivation is required by your dealer if related aftermarket equipment is installed.

Overview

Infotainment System

The infotainment system is controlled by using the infotainment display, controls on the center console, steering wheel controls, and voice recognition.

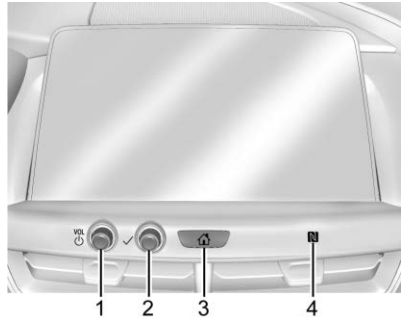

1. ⏻ (Power and Mute) Knob
   - When off, press the ⏻ knob to turn the system on.
   - Turn to decrease or increase the volume.
   - Press and hold to turn the power off.
   - Press to mute/unmute the system when on.
   - When the power is on and the system is not muted, a quick status pane will display when the knob is pressed. Pressing the knob will mute the system and trigger this pane to show a long press is required to actually power down the system.
2. ✓ Knob
   - Turn to highlight a feature. Press to activate the highlighted feature.
3. ⌂ (Home Page)
   - Press to go to the Home Page. See "Home Page" later in this section.

     Press to exit Android Auto or Apple CarPlay. To enter back into Android Auto or Apple CarPlay, press and hold. See *Apple CarPlay and Android Auto* ⇨ *174*.
4. N (Near Field Communication)
   - See "Near Field Communication (NFC)" under *Bluetooth (Overview)* ⇨ *169* or *Bluetooth (Pairing and Using a Phone)* ⇨ *170*

Infotainment Controls on the Console with Navigation Shown, Radio without Navigation Similar

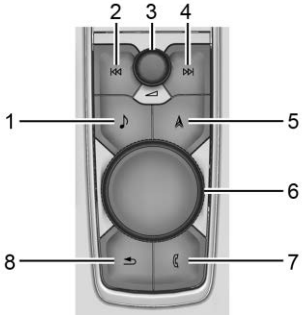

1. ♪ (Radio/AUX)
   - Press to open the “Now Playing” screen.
2. ⏮ (Seek)
   - Radio: Press and release to go to the previous station or channel. Press and hold to fast seek the next strongest previous station or channel. See *AM-FM Radio* ⇨ *141*.
   - USB/Bluetooth: Press to seek to the beginning of the current or previous track. Press and hold to quickly reverse through a track. Release to return to playing speed. See *USB Port* ⇨ *145* or *Bluetooth Audio* ⇨ *148*.
3. ◿ (Power/Volume) Knob
   - Press to turn the power on.
   - Press and hold when the system is on to turn the power off and display the time.
   - Press to mute/unmute the system when on.
   - Turn to decrease or increase the volume.
4. ⏭ (Seek)
   - Radio: Press and release to go to the next station or channel. Press and hold to fast seek the next strongest station or channel.
   - USB/Bluetooth: Press to seek the next track. Press and hold to fast forward through a track. Release to return to playing speed. See *USB Port* ⇨ *145* or *Bluetooth Audio* ⇨ *148*.
5. ⅄ (Navigation) or ✆ (Phone)
   - Press ⅄ to access the navigation menu or press ✆ to access the phone menu.
6. Primary Knob
   - Turn to highlight a feature. Press to activate the highlighted feature.
   - If equipped, move right/left or up/down to change the highlighted area on the display screen.
7. ✆ (Phone) or ⌂ (Home Page)
   - Press ✆ to access the phone menu or press ⌂ to access the Home Page. See “Home Page” later in this section.
8. ↩ (Back)
   - Press to return to the previous display in a menu.

Home Page

The Home Page is where vehicle application icons are accessed. Some applications are disabled when the vehicle is moving.

Swipe left or right across the display to access the pages of icons.

Managing Home Page Icons

1. Touch and hold any of the Home Page icons to enter edit mode.
2. Continue holding the icon and drag it to the desired position.
3. Release your finger to drop the icon in the desired position.
4. To move an application to another page, drag the icon to the edge of the display toward the desired page.
5. Continue dragging and dropping application icons as desired.

Steering Wheel Controls

The infotainment steering wheel controls can be used to control the infotainment features displayed in the instrument cluster.

When in Valet Mode, if equipped, access to the infotainment functions is disabled. See “Valet Mode,” under *Vehicle Personalization* ⇨ *117*.

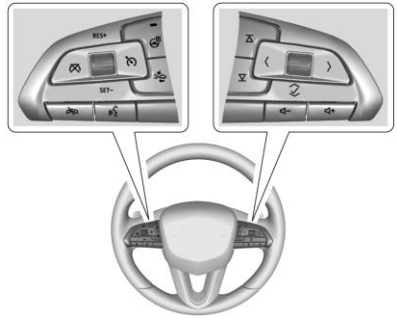

: Press to answer an incoming call or start voice recognition. See *Bluetooth (Overview)* ⇨ *169* or *Bluetooth (Pairing and Using a Phone)* ⇨ *170*.

: Press to decline an incoming call or end a current call. Press to mute or unmute the infotainment system when not on a call.

or : Press to go to the next or previous favorite when listening to the radio. Press to go to the next or previous track when listening to a media source.

< or > : Press to move between the interactive displays in the instrument cluster. Press < to go back to the previous menu.

∧ or ∨ : Use the thumbwheel to scroll to the previous or next selection.

✓ : Press the thumbwheel to open a menu or select a menu item. Press and hold to reset certain displays.

+ or – : Press to increase or decrease the volume.

Using the System

Audio

Touch the Audio icon to display the active audio source page. Examples of available sources may include AM, FM, SXM (if equipped), MyMedia, USB, and Bluetooth.

Phone

Touch the Phone icon to display the Phone main page. See *Bluetooth (Overview)* ⇨ *169* or *Bluetooth (Pairing and Using a Phone)* ⇨ *170*.

Nav

If equipped, touch the Nav icon to display the navigation map. See *Using the Navigation System* ⇨ *150*.

Wi-Fi Hotspot

Touch the Wi-Fi Hotspot icon to display the Wi-Fi Hotspot information. See *Settings* ⇨ *176*.

Climate

Touch the Climate icon to display the Climate main page. See *Dual Automatic Climate Control System* ⇨ *196*.

Users

If equipped, touch the Users icon to sign in or create a new user profile, and follow the on-screen instructions. Only four user profiles can be active at one time in the vehicle. It may be necessary to remove a profile from the menu before creating or signing into an existing profile. The removed profile can be logged into at a later time.

Settings

Touch the Settings icon to display the Settings menu. See *Settings* ⇨ *176*.

Apple CarPlay

Touch the Apple CarPlay icon to activate Apple CarPlay if equipped after a supported device is connected. See *Apple CarPlay and Android Auto* ⇨ *174*.

Android Auto

Touch the Android Auto icon to activate Android Auto, if equipped, after a supported device is connected. See *Apple CarPlay and Android Auto* ⇨ *174*.

Apps

If equipped, in-vehicle apps are available for download. Touch the Apps icon on the Home Page to begin. Downloading and using in-vehicle apps requires Internet connectivity which can be accessed with a data plan through the vehicle's built-in 4G LTE Wi-Fi hotspot, if equipped, or a compatible mobile device hotspot. On most mobile devices, activation of the Wi-Fi hotspot is in the device's Settings menu under Mobile Network Sharing, Personal Hotspot, Mobile Hotspot, or similar.

Availability of apps and connectivity varies by vehicle, conditions, and location. Data plan rates apply. Features are subject to change. For more information, see www.my.cadillac.com/learn.

OnStar Services

If equipped, touch the OnStar Services icon to display the OnStar Services and Account pages. See *OnStar Overview* ⇨ *413* and *OnStar System* ⇨ *149*.

Camera

If equipped, touch the Camera icon to access the camera application. See *Assistance Systems for Parking or Backing* ⇨ *277*.

Shortcut Tray

The shortcut menu is on the left side of the display. It shows the Home application and four other applications.

Infotainment Display Features

Infotainment display features show on the display when available. When a feature is unavailable, it may gray out. When a feature is touched, it may highlight.

Haptic Feedback

If equipped, haptic feedback is a pulse that occurs when an icon or option is touched on the display or when controls below the display are pressed.

Infotainment Gestures

Use the following finger gestures to control the infotainment system.

Touch/Tap

Touch/tap is used to select an icon or option, activate an application, or change the location inside a map.

Touch and Hold

Touch and hold can be used to start another gesture, or to move or delete an application.

Drag

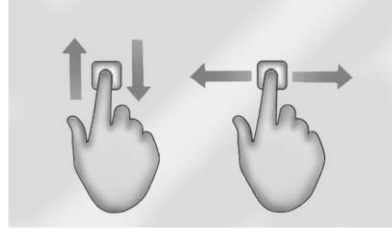

Drag is used to move applications on the Home Page, or to pan the map. To drag the item, it must be held and moved along the display to the new location. This can be done up, down, right, or left. This feature is only available when vehicle is parked and not in motion.

Nudge

Nudge is used to move items a short distance on a list or a map. To nudge, hold and move the selected item up or down to a new location.

Fling or Swipe

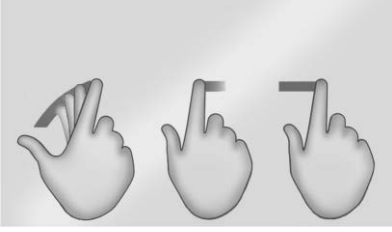

Fling or swipe is used to scroll through a list, pan the map, or change page views. Do this by placing a finger on the display then moving it rapidly up and down or right and left.

Spread

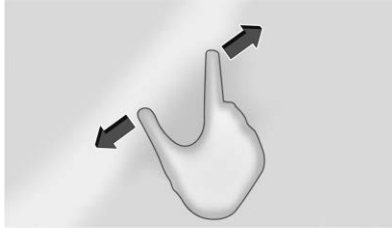

Spread is used to zoom in on a map, certain images, or a web page. Place finger and thumb together on the display, then move them apart.

Pinch

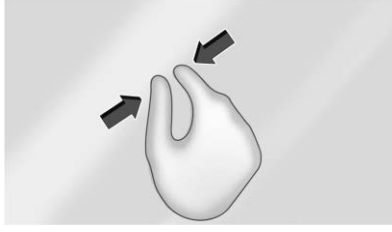

Pinch is used to zoom out on a map, certain images, or a web page. Place finger and thumb apart on the display, then move them together.

Cleaning High Gloss Surfaces and Vehicle Information and Radio Displays

For vehicles with high gloss surfaces or vehicle displays, use a microfiber cloth to wipe surfaces. Before wiping the surface with the microfiber cloth, use a soft bristle brush to remove dirt that could scratch the surface. Then use the microfiber cloth by gently rubbing to clean. Never use window cleaners or solvents. Periodically hand wash the microfiber cloth separately, using mild soap. Do not use bleach or fabric softener. Rinse thoroughly and air dry before next use.

Software Updates

Over-the-Air Software Updates

If equipped, see “Updates” under *Settings* ⇨ *176* for details on software updates.

Radio

AM-FM Radio

Playing the Radio

Press ♪ on the console controls or touch the Audio icon on the Home Page to display the active audio source page. Choose the three most recently used sources listed at the left side of the display. Choose the More option to display a list of available sources. Examples of available sources may include AM, FM, SXM (if equipped), MyMedia, USB, AUX (if equipped), and Bluetooth.

Infotainment System Sound Menu

From any of the audio source main pages, touch Sound to display the following:

Equalizer : Touch to adjust Bass, Midrange, Treble, and Surround (if equipped) using the options on the infotainment display.

Fade/Balance : Touch to adjust by using the controls on the infotainment display or by tapping/dragging the crosshair.

Sound Mode (If Equipped)

- Bose Centerpoint surround sound systems have four sound modes:
  - Normal: Adjusts the audio to provide the best sound for all seating positions.
  - Driver: Adjusts the audio to provide the best sound for the driver.
  - Rear: Adjusts the audio to provide the best sound for the rear seat occupants.
  - Centerpoint: Turns on Bose Centerpoint surround technology. This setting creates a surround sound from nearly any audio source: existing stereo and MP3 players. For more information on Bose Centerpoint surround technology, see www.boseautomotive.com.

Finding a Station

Seeking a Station

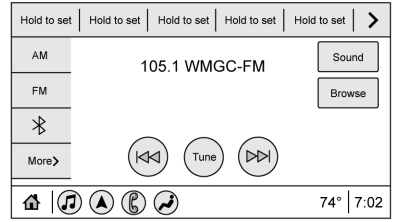

From the AM, FM, or SXM (if equipped) option, press ⏮ or ⏭ on the console controls or from the AM or FM menu, touch ⏮ or ⏭ to search for the previous or next strong station or channel.

Browsing Stations

Touch the Browse option to list all available stations or channels. Navigate up and down through all stations and channels by scrolling the list. Touch the station you want to listen to. Touch ☆ to save the station or channel as a favorite.

If equipped, touch Update Station List to update the active stations or channels in your area.

Direct Tune

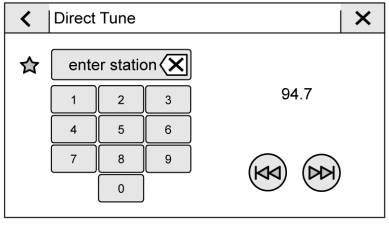

Access Direct Tune by touching the Tune icon on the infotainment display to bring up the keypad. Navigate through all frequencies using the arrows on the Direct Tune display. Directly enter a station or channel using the keypad. When a new station or channel is entered, the information about that station or channel displays on the right side. This information will update with each new valid frequency. Touch ☆ to save the station or channel as a favorite.

The keypad will gray out entries that do not contribute to a valid frequency and will automatically place a decimal point within the frequency number.

Touch (X) to delete one number at a time. Touch and hold (X) to delete all numbers.

A valid AM or FM station will automatically tune to the new frequency but not close the Direct Tune display. When listening to SXM (if equipped), touch Go after entering the channel. Press ⮌ on the console controls, touch the Back icon on the infotainment display, or ✕ to exit out of Direct Tune.

The tune arrows on the right side of the Direct Tune display tune through the complete station list one station step at a time per touch. A touch and hold advances through stations quickly.

If equipped, HD Radio multicast stations cannot be tuned directly through the Direct Tune feature. Only the analog or HD1 station can use that feature. Use the arrows on the Direct Tune display to adjust to the multicast stations.

AM, FM, and SXM Categories

From the AM stations, if equipped with HD Radio, FM, or SXM (if equipped) display, touch Categories at the top of the Browse menu to access the categories list. The list contains names associated with the AM or FM stations, or SXM channels. Touch a category name to display a list of stations or channels for that category. Touching a station or channel from the list tunes the radio to that station or channel.

Storing Radio Station Presets

Favorites are stored in the area at the top of the display.

AM, FM, SXM (if equipped), and HD Radio Stations (if equipped) : Press and hold a preset to store the current station as a favorite. Touch a saved favorite to recall a favorite station.

Favorites can also be stored by touching ☆ in a station or channel list. This will highlight indicating that it is now saved as a favorite.

The number of favorites displayed is automatically adjusted by default, but can be manually adjusted in Settings in the System tab under Favorites and then Set Number of Audio Favorites. It can also be adjusted in Settings in the Apps tab under Audio and then Set Number of Audio Favorites.

HD Radio Technology

If equipped, HD Radio is a free service with features such as digital quality sound, more stations available on a single frequency such as HD2 and HD3, and display information such as artist and song title.

From the Now Playing display, touch the HD Radio icon to turn HD on or off.

Station Access

To access HD Radio stations:

1. Tune the radio to the station. If HD Radio is turned on and the station is broadcasting in HD Radio, the radio will automatically tune to the HD version of the current channel (HD1) after several seconds. The radio will also display icons representing additional channels (HD2, ...HD8), that may be available. When the radio successfully tunes to a HD station, the HD logo will display and digital audio will play.
2. Touch the display arrows to tune to the previous or next HD Radio station.

There may be a delay before the station starts playing.

The HD Radio station number is indicated next to the HD logo.

HD Radio stations can be saved as favorites.

For a list of all stations, see www.hdradio.com.

HD Radio Troubleshooting

Digital Audio Delay : Wait for the signal to process. This can take several seconds.

Volume Change, Audio Skip, Echo, Digital Audio Lost : Station signal strength may be weak, the station is out of range, or the station may be out of alignment. Verify proper reception on another station.

If the HD Radio signal weakens while listening to HD1, the radio will automatically switch to the analog version of the radio station.

If the HD Radio signal loses reception while listening to stations HD2 to HD8, the radio mutes until the signal can be recovered or until the station is changed.

HD Radio can be disabled if driving in a weak signal area. Touch HD Radio On/Off to toggle HD Radio reception on and off.

Radio Data System (RDS)

If equipped, RDS features are available for use only on FM stations that broadcast RDS information. With RDS, the radio can:

- Group stations by Category (i.e., Program Type) such as Rock, Jazz, Classical, etc.

- Display messages from radio stations.

This system relies on receiving specific information from these stations and only works when the information is available. It is possible that a radio station could broadcast incorrect information that causes the radio features to work improperly. If this happens, contact the radio station.

When information is broadcast from a RDS station, the station name or call letters display on the audio screen. Radio text supporting the currently playing broadcast may also appear.

Satellite Radio

SiriusXM Radio Service

If equipped, vehicles with a valid SiriusXM radio subscription can receive SiriusXM programming.

SiriusXM radio has a wide variety of programming and commercial-free music, coast to coast, in digital-quality sound. In the U.S., see www.siriusxm.com or call 1-888-601-6296. In Canada, see www.siriusxm.ca or call 1-877-438-9677.

When SiriusXM is active, the channel name, number, song title, and artist appear on the display.

SiriusXM with 360L

SiriusXM with 360L interface has enhanced in-vehicle listening experience for subscribers. The experience now offers more categories and system learned recommendations toward discovering more personalized content.

To use the full SiriusXM 360L program, including streaming content and listening recommendations, OnStar Connected Access is required. Connected vehicle services vary by model and require a complete working electrical system, cell reception, and GPS signal. An active connected plan is required.

Reference the SiriusXM user guide for use and subscription information.

Radio Reception

Unplug electronic devices from the accessory power outlets if there is interference or static in the radio.

FM

FM signals only reach about 16 to 65 km (10 to 40 mi). Although the radio has a built-in electronic circuit that automatically works to reduce interference, some static can occur, especially around tall buildings or hills, causing the sound to fade in and out.

AM

The range for most AM stations is greater than for FM, especially at night. The longer range can cause station frequencies to interfere with each other. Static can also occur when things like storms and power lines interfere with radio reception. When this happens, try reducing the treble on the radio.

SiriusXM Satellite Radio Service

If equipped, SiriusXM Satellite Radio Service provides digital radio reception. Tall buildings or hills can interfere with satellite radio signals, causing the sound to fade in and out. In addition, traveling or standing under heavy foliage, bridges, garages, or tunnels may cause loss of the SiriusXM signal for a period of time. Some cellular services may interfere with SXM reception causing loss of signal.

Mobile Device Usage

Mobile device usage, such as making or receiving calls, charging, or just having the mobile device on may cause static interference in the radio. Unplug the mobile device or turn it off if this happens.

Multi-Band Antenna

The roof antenna may be used for radio, navigation, and OnStar, depending on the equipped options. Keep clear of obstructions for clear reception. If the vehicle has a sunroof, and it is open, reception can also be affected.

Audio Players

Avoiding Untrusted Media Devices

When using media devices such as SD cards, USB devices, and mobile devices, consider the source. Untrusted media devices could contain files that affect system operation or performance. Avoid use if the content or origin cannot be trusted.

USB Port

Audio stored on a USB device may be listened to.

The vehicle may be equipped with two USB ports in the center console under the armrest. These ports are for data and charging. There may also be two USB ports for charging only at the rear of the center console.

Caution

To avoid vehicle damage, unplug all accessories and disconnect all accessory cables from the vehicle when not in use. Accessory cables left plugged into the vehicle, unconnected to a device, could be damaged or cause an electrical short if the unconnected end comes in contact with liquids or another power source such as the accessory power outlet.

Playing from a USB

A USB mass storage device can be connected to the USB port.

Audio extensions supported by the USB may include:

- MP3
- AAC
- OGG
- 3GP

Gracenote

When plugging in a USB device, Gracenote service builds voice tags for music. Voice tags allow artists, albums

with hard to pronounce names, and nicknames to be used to play music through voice recognition, if equipped.

While indexing, infotainment features may be available.

My Media Library

MyMedia is only available when more than one indexed device is connected. It allows access to content from all indexed media sources. MyMedia will show as an available source in the Source page.

USB MP3 Player and USB Devices

The USB MP3 players and USB devices connected must comply with the USB Mass Storage Class specification (USB MSC).

To play a USB device:

1. Connect the USB.
2. Touch Audio from the Home Page.
3. Touch the More option and then touch the USB device.

Use the following when playing an active USB source:

▷ **:** Touch to play the current media source.

II : Touch to pause playback of the current media source.

⏮ **:**

- Touch to seek the beginning of the current or previous track.
- Touch and hold to reverse quickly through playback. Release to return to playing speed. Elapsed time displays.

⏭ **:**

- Touch to seek the next track.
- Touch and hold to advance quickly through playback. Release to return to playing speed. Elapsed time displays.

Shuffle : Touch the shuffle icon to play music in random order.

USB Sound Menu

See “Infotainment System Sound Menu” under *AM-FM Radio* ⇨ *141*.

USB Browse Menu

When a list of songs, albums, artists, or other types of media displays, the up and down arrows and A-Z appear on the left side. Select A-Z to view a display that will show all letters of the alphabet and select the letter to go to.

Touch the up and down arrows to move the list up and down.

Touch Browse and the following may display:

Playlists:

1. Touch to view the playlists stored on the USB.
2. Touch a playlist to view the list of all songs in that playlist.
3. Touch a song from the list to begin playback.

Supported playlist extensions are m3u and pls.

Artists:

1. Touch to view the list of artists stored on the USB.
2. Touch an artist name to view a list of all albums by the artist.
3. To select a song, touch All Songs or touch an album and then touch a song from the list.

Songs:

1. Touch to display a list of all songs on the USB.
2. To begin playback, touch a song from the list.

Albums:

1. Touch to view the albums on the USB.
2. Touch the album to view a list of all songs on the album.
3. Touch a song from the list to begin playback.

Genres:

1. Touch to view the genres on the USB.
2. Touch a genre to view a list of artists.
3. Touch an artist to view albums by that artist.
4. Touch an album to view songs on the album.
5. Touch a song to start playback.

Composers:

1. Touch to view the composers on the USB.
2. Touch a Composer to view a list of albums by that composer.
3. Touch an album or All Songs to view a list of songs.
4. Touch a song from the list to begin playback.

Folders:

1. Touch to view the directories on the USB.
2. Touch a folder to view a list of all files.
3. Touch a file from the list to begin playback.

Podcasts : Touch to view the podcasts on the connected Apple device and get a list of podcast episodes.

Audiobooks:

1. Touch to view the audiobooks stored on the Apple device.
2. Touch an audiobook to get a list of chapters.
3. Touch the chapter from the list to begin playback.

File System and Naming

File systems supported by the USB may include:

- FAT32
- NTFS
- HFS+

The songs, artists, albums, and genres are taken from the file's song information and are only displayed if present. The radio displays the file name as the track name if the song information is not available.

Supported Apple Devices

To view supported devices, see my.cadillac.com/learn.

Storing and Recalling Media Favorites

To store media favorites, touch Browse to display a list of media types.

Touch one of the following Browse options to save a favorite:

Playlists : Touch ☆ next to any playlist to store the playlist as a favorite. Touch a saved favorite to recall a favorite playlist. The first song in the playlist begins to play.

Artists : Touch ☆ next to any artist to store the artist as a favorite. Touch a saved favorite to recall a favorite artist. The first song in the artist list begins to play.

Songs : Touch ☆ next to any song to store the song as a favorite. Touch a saved favorite to recall a favorite song.

Albums : Touch ☆ next to any album to store the album as a favorite. Touch a saved favorite to recall a favorite album. The first song in the album list begins to play.

Genres : Touch ☆ next to any genre to store the genre as a favorite. Touch a saved favorite to recall a favorite genre. The first song of the genre begins to play.

Podcasts : Touch ☆ next to any podcast to store the podcast as a favorite. Touch a saved favorite to recall a favorite podcast. The podcast begins to play.

Audiobooks : Touch ☆ next to any audiobook to store the audiobook as a favorite. Touch a saved favorite to recall a favorite audiobook. The first chapter in the audiobook begins to play.

Media Playback and Mute

USB playback will be paused if the system is muted. If the steering wheel mute control is pressed again, playback will resume.

If the source is changed while in mute, playback resumes and audio will unmute.

Bluetooth Audio

Music may be played from a paired Bluetooth device. See *Bluetooth (Overview)* ⇨ *169* or *Bluetooth (Pairing and Using a Phone)* ⇨ *170* for help pairing a device.

Volume and song selection may be controlled by using the infotainment controls or the mobile device.
If Bluetooth is selected and no volume is present, check the volume setting on both your mobile device and the infotainment system.

Music can be launched by touching Bluetooth from the recent sources list on the left of the display or by touching the More option and then touching the Bluetooth device.

To play music via Bluetooth:

1. Power on the device, and pair to connect the device.
2. Once paired, touch Audio from the Home Page, then touch Bluetooth from the recent sources list on the left of the display.

Bluetooth Sound Menu

See “Infotainment System Sound Menu” under *AM-FM Radio* ⇨ *141*.

Manage Bluetooth Devices

From the Home Page:

1. Touch Audio.
2. Touch More.

3. Touch Bluetooth.
4. Touch Devices to add or delete devices.

When touching Bluetooth, the radio may not be able to launch the audio player on the connected device to start playing. When the vehicle is not moving, use the mobile device to begin playback.

All devices launch audio differently. When selecting Bluetooth as a source, the radio may show as paused on the display. Press play on the device or touch ▷ on the display to begin playback.

Browse functionality will be provided where supported by the Bluetooth device. This media content will not be part of the MyMedia source mode.

Some smartphones support sending Bluetooth music information to display on the radio. When the radio receives this information, it will check to see if any is available and display it. For more information about supported Bluetooth features, see my.cadillac.com/learn.

OnStar System

4G LTE

If equipped with 4G LTE, up to seven devices, such as smartphones, tablets, and laptops, can be connected to high-speed Internet through the vehicle's built-in Wi-Fi hotspot.

Call 1-888-4ONSTAR (1-888-466-7827) to connect to an OnStar Advisor for assistance. See www.onstar.com for vehicle availability, details, and system limitations. Service and connectivity may vary by make, model, year, carrier, availability, and conditions. 4G LTE service is available in select markets. 4G LTE performance is based on industry averages and vehicle systems design. Some services require a data plan.

The OnStar App

If equipped, the infotainment system has OnStar controls in the embedded OnStar app on the Home Page. Most OnStar functions that can be performed with the buttons can be done using the app. To open the app, touch the OnStar icon on the Home Page. App updates require a corresponding service plan. Features vary by region and model. Features are subject to change. For more information, see my.cadillac.com/learn or press ⓞⓝ.

Services

The Services tab displays the default view for the app. Use this page to launch the available OnStar services. Touch a service to open its display. Touch Wi-Fi to launch the connections manager. Turn-by-Turn and Advisor Call are the other tiled options.

Account

The Account tab displays a snapshot of the account linked with the vehicle. If there is no such account, this tab will show all values as ——. The call advisor call icon will be active even if there is no active account.

Advisor Call

Selecting Advisor Call is the same as pressing ⓞⓝ or calling 1-888-4ONSTAR (1-888-466-7827). The X option in the

upper right corner of the screen does not end the call, but returns to the previous screen.

Turn-by-Turn Directions

With a connected plan, an OnStar Advisor can download a destination to the vehicle or its embedded navigation system, if equipped. Select Turn-by-Turn Directions from the Services tab of the OnStar app to call an Advisor or select a recent or favorite destination. Touch the navigation icons to select home, address or place. A destination transfer from OnStar will show the detail view of the destination when it is transferred from OnStar to the Navigation application. See www.onstar.com for a coverage map. Services vary by model. Map coverage is available in the United States, Puerto Rico, and Canada.

Wi-Fi Hotspot

Touch to display the Settings page, which shows the configurations for the vehicle hotspot and allows them to be changed.

For more information, see www.onstar.com.

Navigation

Using the Navigation System

If equipped, launch the Nav application by touching the Nav icon on the Home Page or on the shortcut tray near the bottom of the infotainment display.

When the Nav application is launched for the first time, a product walkthrough is available. Use of the feature requires the Terms and Conditions and the Privacy statement to be confirmed. If available and signed into a profile, it is also suggested to enable and confirm Predictive Navigation.

Predictive Navigation (If Equipped)

If Predictive Navigation is available and confirmed, this feature learns preferences by remembering where the vehicle has been. It uses the locations and navigation history to personalize routes and results.

Predictive Navigation may learn elements such as:

- Personalized routes based on preferred streets.
- Search results that provide best matches at the top of the list.
- Predictive traffic.
- Local map content updating.

Predictive Navigation can also be enabled or disabled at a later time by touching ··· (Options). While in Options, touch Settings, then Map and Navigation Settings, and then Predictive Navigation. See *Settings* ⇨ *176*.

Navigation Map View

After opening the Nav application for the first time, the application will always open in full map view displaying the vehicle's current location. When the vehicle is stopped, the search bar will appear along the top of the navigation map view. Manually close the search bar by touching ✕. When the vehicle is moving, the 🔍 (Search) icon will replace the search bar to maximize the full map view.

Destination Card Preferences

From the Nav application, set up Home and Work addresses to enable one-touch navigation. To set up Home and Work addresses, touch ··· and select Settings, then Map and Navigation Settings, and then Destination Card Preferences. Show My Places on Map should be on by default. Select and enter Home and/or Work address and save.

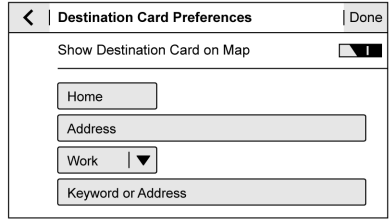

If the vehicle's system is not signed into a customized profile, the current location icon uses a generic symbol. Once signed into a customized profile, the current location symbol will show a customized icon. See *Navigation Symbols* ⇨ *154*.

Map and Navigation Settings

Touch ··· while in the map view to display options. The following may display:

- 3D Heading Up, 2D Heading Up, 2D North
- Show on Map
- Traffic Events (available with OnStar Connected Navigation)
- Settings
- Edit Destination (if a route has been set)
- Avoid on Route (if a route has been set)

Touch Settings to view Map and Navigation Settings. The following may display:

- Destination Card Preferences
- Map Preferences
- Route Preferences
- Navigation Voice Control
- Traffic Preferences
- Alert Preferences
- Fuel Grade Preferences
- Manage History
- Predictive Navigation: See "Predictive Navigation (If Equipped)" previously in this section.
- About

To exit a list, touch ✕ in the top right corner to return to the main map view.

Make sure to set up preferences before setting a destination and starting active guidance.

Map Preferences

Touch to choose between basic map feature configurations:

Map Colors

- Auto – Touch to automatically change modes based on lighting conditions.
- Day (Light)
- Night (Dark)

3D Landmark (Default is On) : Touch On or Off. When turned on, the system will display all 3D Landmarks on the map depending on the zoom level.

3D Building (Default is Off) : Touch On or Off. When turned on, the system will display all of the possible 3D building shapes on the map depending on the zoom level.

Show Terrain in 3D (Default is Off) : If equipped, touch On or Off. When turned on, the system will display terrain information on the map in 3D view.

Auto-Zoom (Default is On) : Touch On or Off. When turned on, the system will automatically adjust the zoom level when the vehicle is approaching a turn. After the turn is completed, the system automatically brings the zoom back to the originally set level. If the vehicle is approaching a turn with the next turn occurring shortly after, the Auto-Zoom will remain on until both turns are completed.

Route Preferences

Touch to access the Route Preferences. The choices are:

- Preferred Route – Choose from two different route options: Fastest or Eco-Friendly.
  - Fastest would be the route with the shortest drive time.
  - Eco-Friendly would be the most fuel-efficient route.
- Avoid on Current Route – Choose any of the road features to avoid while on route:
  - Highways
  - Unpaved Roads
  - Ferries
  - Carpool Lanes
  - Toll Roads
  - Tunnels
  - Country Borders

Navigation Voice Control

Touch to access the voice control setting display.

- Navigation Volume – To adjust the volume level, touch the up and down arrows. If the voice guidance prompt is being heard, volume can also be adjusted using the knob on the center stack or the volume switch on the steering wheel.
- Navigation Voice Prompt Level during a Call. Options available are:
  - Full Prompt (Selected by default)
  - Tone Only
  - None

Traffic Events (If Equipped)

This feature provides a list of events that are on the route or nearby. Touch ··· and then select Traffic Events. An OnStar connected Navigation service plan is required.

Traffic Preferences (If Equipped)

While in Map View, touch ···, then Settings and then Map and Navigation Settings to access Traffic Preferences. When Show Traffic on Map is turned on, the feature provides an overview of the traffic flow using different coded colors. The following options are available for rerouting:

- Auto Reroute to Better Route – The system will automatically reroute if the system detects there is a traffic issue ahead.
- Ask Before Rerouting (Default) – If the system detects there is a traffic issue ahead, it will display a pop-up with details about the issue. Choose to reroute or cancel the alert.
- Never Search for Better Route – The system will not check for a better route until one of the above options is selected.

Alert Preferences

Set alerts on or off during both inactive and active guidance views. The following alerts may be available:

- Road Safety Alerts – Touch to display upcoming School Zones.
- Traffic Camera Alerts

Manage History

Touch Manage History to access the History options:

- Clear Recent Destinations – Touch ⊗ to clear the recent destinations.
- Clear Search History – Touch ⊗ to clear the search history.

About

Touch to display software information, such as:

- Telenav Terms and Conditions
- Telenav Privacy Statement
- Navigation Version

Maps

The Nav application requires a map database to run. It is stored on an SD card that is connected to the infotainment system. If the map database is not available, a missing SD card error message will be displayed.

SD Card Error Messages

The SD card only works for one unique vehicle. The SD card must pass authentication verification to be used for that specific vehicle. Potential error scenarios and messages include:

- The SD card has initialized for the first time: “Once initialized, this SD card can only be used for navigation in this vehicle.”
- The SD card is not working properly: “SD card is not functioning properly. (Error Code).”
- The SD card is not paired with the existing system: “This SD card is not valid in this vehicle for navigation. See Owner’s Manual for more detail or visit your dealer. (Error Code).”
- The SD card has been removed from the slot: “SD card has been removed. (Error Code).”

Touch Continue to resume after the initialization error message. For the other messages, touch OK to return to the Home Page.

Navigation Symbols

Following are the most common symbols that may appear in the Nav application.

This indicates the vehicle's current location and direction on the map.

This is the vehicle's current location icon during inactive guidance mode. Once a user profile is created, the current location icon can be customized.

This icon indicates the vehicle's current location and direction on the map.

The destination pin marks the location of the final destination. Touch the pin to view the destination address or to add it or remove it from the Favorites list. Hide the information by touching the pin one more time. It will automatically time out if no action is taken.

If equipped, smart Points of Interest (POIs) are places of interest for parking and gas stations.

The progress bar provides an overview of the route progress and may show traffic and incidents along the way. As the route proceeds, the vehicle icon moves up the bar.

Touch the icon to zoom out on the map and view the entire route. Touch it again to return to the previous view.

View the drive time by touching the estimated time of arrival (ETA).

Current Location

When the vehicle is parked and not in a Navigation session, the user icon is centered on the map view, highlighting the current location.

Destination

Receiving Destination Directions from Different Sources

Destinations can be received or transferred from different sources to the Nav application for route guidance. If equipped, some of these sources may include:

- Navigation from search results.
- OnStar Advisor destination download.
- An address from the Contacts list.
- An application on the smartphone that can send destinations to the vehicle.
- An application downloaded to the vehicle such as OnStar Services that can send destinations to the navigation system.

Waypoints

Add up to five waypoints, which are additional destinations, along the route. To add an additional stop or waypoint:

1. From active guidance, touch 🔎.
2. Search for the destination using One-Box, Voice search, or the Quick Category icons.
3. Choose search results Along Route, Nearby, or Near Destination.
4. Choose the desired waypoint and touch Add to Trip or replace the current destination by touching New Destination.

Route options are not available for waypoints.

Arriving at a Waypoint

When approaching a waypoint, the system will display a Destination Arrival view. To continue on to the next destination touch the Drive to message on the infotainment display.

If the vehicle passes the waypoint or gets out of the current route, the system will automatically reroute back to this waypoint. At the same time, it will show a Drive to icon along with the next waypoint address so the current waypoint can be skipped and guidance can resume to the next waypoint or destination.

Editing a Waypoint

When waypoints are added during active guidance, the system allows a stop to be deleted or the order to be changed. To edit a waypoint:

1. Touch ⋯.
2. Touch Edit Destinations.
   - Modify destination order by touching and holding the arrow until it is highlighted. Drag to move the waypoint up or down the list.
   - Delete a waypoint by touching 🗑. A pop-up will appear to confirm waypoint removal. Once the request is confirmed, the system will remove the address from the destinations list. Touch ✕ on the top right corner so the system can recalculate the route.

     If there is only one address in the destinations list, the system will disable the move and delete functions. The system will not allow the final destination to be deleted.

Map Information

Road network attributes are contained in the map database for map information. Attributes include information such as street names, street addresses, and turn restrictions. A detailed area includes all major highways, service roads, and residential roads. The detailed areas include Places of Interest (POIs) such as restaurants, airports, banks, hospitals, police stations, gas stations, tourist attractions, and historical monuments.

If the vehicle does not have an applicable service plan, the map database may not include data for newly constructed areas or map database corrections that are completed after production. The navigation system provides full route guidance in the detailed map areas.

Zoom Control

The zoom control display is shown on the map view. A few ways to zoom in or out are:

- Touch + or – to zoom in or out on the map.
- Double tap with one finger to zoom in or single tap with two fingers to zoom out on the map.
- Use the index finger and thumb to zoom out by pinching and then zoom in by spreading those two fingers on the map.

Map Gestures and Map Scale

Use the following gestures on the infotainment display to adjust the map scale and display options.

- Pinch to zoom in or out.
- Pan the map.
- Use two fingers to tilt down and change from 2D to 3D. Tilt up to change back to 2D.
- Rotate the map.

See *Using the System* ⇨ *137*.

Mute

When in active guidance, the audio prompts while using navigation can be muted. Touch the speaker icon on the right side of the upper bar. A slash will appear on the speaker to indicate voice guidance is muted.

Active Guidance View

When a destination is chosen and a navigation session is active, the navigation system enters into an Active Guidance View (AGV).

Map Orientation

Touch ··· on the map to access map orientation settings. Map orientation is 3D Heading Up by default.

Available settings are:

- 3D Heading Up (Default): 3D map with the vehicle pointing up. In this mode, the current location icon will always head up and the map will rotate around it.
- 2D Heading Up: 2D map with the vehicle pointing up. In this mode, the current location icon will always head up and the map will rotate around it.
- 2D North Up: 2D map with North pointing up. In this mode, the current location icon will shift as the vehicle turns left and right.

Touch the icon to change the map type. The icon and label will also update accordingly.

Depending on the zoom level of the 2D Heading Up and 3D Heading Up maps, the system may automatically switch to the 2D North Up map.

When in AGV, the entire route can be viewed in 2D North Up by touching the traffic bar. The map will zoom out and readjust to display the full route. When in 2D North Up Route View, the Recenter icon will appear in the middle of the display. Touch either the Recenter icon or the traffic bar again to return to the previous view, either 2D or 3D.

Lane Guidance

The map will display the lane information for the upcoming maneuver if it is available.

Junction View

When a vehicle is on the highway and approaching the exit, an image displays the lane that the vehicle must stay in to complete the next maneuver.

Quick-Turn View

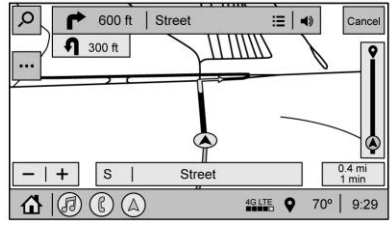

When the vehicle is approaching a turn with the next turn following in quick succession, a quick-turn list appears below the primary turn indicator. An audio prompt will announce the quick turn.

Auto-Zoom

When approaching a maneuver, the map will automatically zoom in to show both the vehicle icon and the upcoming maneuver to give a better view of the maneuver. Once the maneuver is complete, the system will zoom back to the previous zoom level. Touch ··· on the map to access Settings, then touch Map Preferences to access Auto-Zoom. This feature can be enabled or disabled.

Directions

Touch the menu option next to the next turn street name to display Directions.

Directions displays the turns and directions from the current location to the final destination.

Editing Directions

Directions can be edited by choosing ✎, which expands the list to fill the display and enters the Edit Mode. While in Edit Mode, an unwanted route segment can be removed from the route by touching 🗑 next to the segment. A pop-up appears to confirm segment removal.

When the route segment has been removed, all segments are replaced by an activity indicator while the new route is recalculated. When the recalculation is complete, the activity indicator is replaced with the new route segments.

Highway Exits List

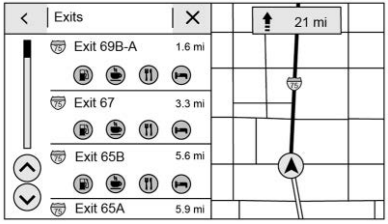

Touch to open the Exit list. This icon displays next to the current street name near the bottom of the display. The icon only appears when on a highway with defined exits.

While traveling on roads with designated exits, an Exit list may be available. The Exit list displays the exit number, distance to the exit from the current vehicle position, and convenience stops that may be available, such as gas, coffee, food, and lodging.

Next Maneuver Menu

When in Active Guidance, the Next Maneuver Turn Arrow, Street Name, and Maneuver Distance are shown in the Next Maneuver at the top of the display overlaying the map. ETA, Distance to Destination, and Traffic Indicator are displayed in a panel pinned on the right of the display.

Navigation Next Turn Maneuver Alert

If the Navigation application is not open when a near maneuver prompt is given, it is shown as an alert. Touch the alert to go to the main navigation view or touch X to dismiss the alert.

Repeat Voice Guidance

This symbol indicates the next guidance maneuver. Touch it to repeat the last spoken guidance instruction.

Incident Alert (If Equipped)

During active guidance, if the system determines that there is an incident ahead but there is not a better route, the system will play a tone and show a Quick Notice. This will only show once per incident.

Incident Reports (If Equipped)

Incident report icons, along with traffic flow data, display on the map during both active and inactive guidance.

End Route

Touch Cancel at the top right corner to end active guidance and return to inactive guidance. If active guidance is canceled before the destination has been reached, a pop-up option to Resume Trip will appear.

Resume Trip

The trip can be resumed if it was canceled by touching the Resume Trip pop-up option.

If the system has determined that the destination has been reached, either because the arrival view displayed or the destination has been passed, the Resume Trip option will not appear.

Favorites

The navigation favorites can have contacts, addresses, or POIs that have been saved through the favorite icon on the details view.

Accessing Favorites

In the Nav application, view the Favorites list by touching ☆ in the search bar along the top of the Nav map view. If the search bar is closed, touch 🔍 and select ☆.

Saving Favorites

Favorites can be added from a number of the system's applications. Touch the favorites icon to save content as a favorite.

Renaming Navigation Favorites

1. Touch the Settings icon on the Home Page and touch the System tab.
2. Touch Favorites to access the Manage Favorites option.
3. Touch a saved Navigation favorite to access the edit icon. Touch the edit icon to rename the favorite.
4. Touch Save to store the renamed favorite.

Recents

Touch ◷ to access a list of recent destinations.

Recenter Position Icon

Touch the Recenter Position arrow in the middle of the map view to reset the map to the current location.

Last Parked Location

The Last Parked Location is the last location the vehicle engine was turned off. That location is displayed in the first row of the Recents list. Touching the last Parked Location shows the Address Details view to either save the address or drive to it. The Last Parked Location can be deleted by entering the Edit display. Once the Last Parked Location is deleted, it no longer appears in the Recents list, unless the vehicle is started at that location again.

Show POI Icons

To see the POI categories, touch Options, then touch Show on Map. Up to eight categories of icons can be selected.

Smart POI Icons on Map (If Equipped)

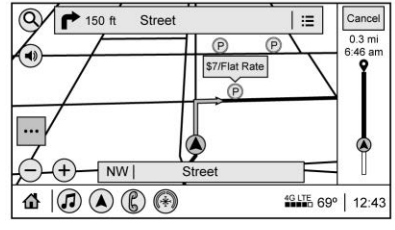

The smart POI icons such as fuel stations and parking may appear based on time, location, driver search behavior, driving conditions, and vehicle conditions.

Touch a smart POI icon to open the corresponding details:

- Left side: Name and address of the POI.
- Right side: 🚗 + ETE (Estimated Time Enroute.)

Smart Fuel Station Icons

Fuel station prices are shown if available for nearby stations when the vehicle is low on fuel.

Smart Parking Icons

When reaching a densely populated destination and the system determines that parking may be limited, the system will attempt to display nearby parking destinations with pricing information, if available.

Report an Issue Using POI Details (If Equipped)

In the POI details page, a POI issue can be reported if the data is not accurate or the address is incorrect. Touch Report an Issue near the bottom of the display to access the issue selection page. Touch one of the predefined issues on the selection page, then touch Send. The system will send the information for analysis.

Search

Touch Search on the infotainment display to open the search display. It has a search field entry box, quick category icon shortcuts, recents icon, favorites icon, and keyboard.

Auto Complete

Enter a partial location in the field entry box on the search display. Auto complete will attempt to complete the destination based on what is being entered. Touch the suggested item to search.

Search While in Motion with No Front Seat Passenger Present

The search display will not allow changes or text input with the keyboard when the vehicle is in motion. As a result, a display showing three rows of the most commonly used categories appears. Touching the search box will activate speech recognition.

Search While in Motion with Front Seat Passenger Present

If the system detects that the front seat passenger is present with both driver and passenger seat belts buckled, touching the search icon will display an alert message that allows the passenger to search for a destination as if the vehicle were stopped.

Connected Navigation

Connected Navigation is a subscription service that enables certain capabilities within the navigation system, such as Traffic, Smart Search/Routing, and Predictive Navigation capabilities. The system will show an alert when the subscription is expiring and will ask to renew the plan.

OnStar System

With a connected plan, an OnStar Advisor can download a destination to the vehicle or into the built-in navigation system.

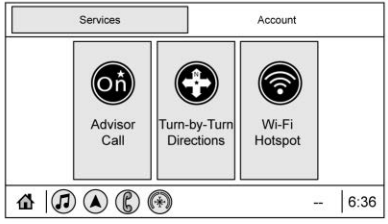

Touch OnStar Services on the Home Page to access the OnStar menu. Touch Turn-by-Turn Directions icon while on the Services tab of the OnStar menu.

Turn-by-Turn Navigation

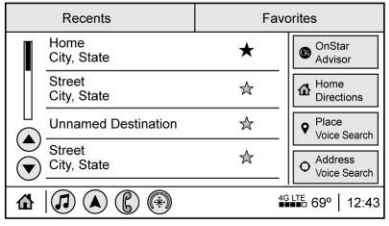

If equipped, after touching the Turn-by-Turn Directions icon, select destinations from Recents or Favorites. Recents or Favorites will be empty if this is the first use. To find new locations, touch OnStar Advisor, Home Directions, Place Voice Search, or Address Voice Search.

Lane Guidance

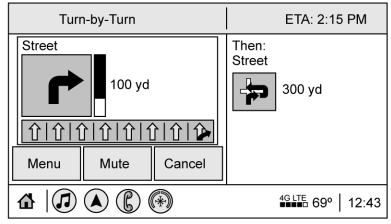

When available, the system will show the best lane(s) to be in for the next maneuver.

Cancel a Route

If a route is in progress using either the vehicle navigation system or the Turn-by-Turn route, and a new route is requested, the current route in progress will be canceled.

Global Positioning System (GPS)

If equipped, the position of the vehicle is determined by using satellite signals, various vehicle signals, and map data.

At times, other interference such as the satellite condition, road configuration, condition of the vehicle, and/or other circumstances can affect the navigation system's ability to determine the accurate position of the vehicle.

The GPS shows the current position of the vehicle using signals sent by GPS satellites. When the vehicle is not receiving signals from the satellites, a symbol appears in the status bar.

This system might not be available or interference can occur if any of the following are true:

- Signals are obstructed by tall buildings, trees, large trucks, or a tunnel.
- Satellites are being repaired or improved.

For more information if the GPS is not functioning properly, see *Problems with Route Guidance* ⇨ *162* and *If the System Needs Service* ⇨ *163*.

Vehicle Positioning

At times, the position of the vehicle on the map could be inaccurate due to one or more of the following reasons:

- The road system has changed.
- The vehicle is driving on slippery road surfaces such as sand, gravel, or snow.
- The vehicle is traveling on winding roads or long, straight roads.
- The vehicle is approaching a tall building or a large vehicle.
- The surface streets run parallel to a freeway.
- The vehicle has been transferred by a vehicle carrier or a ferry.
- The current position calibration is set incorrectly.
- The vehicle is traveling at high speed.
- The vehicle changes directions more than once, or the vehicle is turning on a turn table in a parking lot.
- The vehicle is entering and/or exiting a parking lot, garage, or a lot with a roof.
- The GPS signal is not received.
- A roof carrier is installed on the vehicle.
- Tire chains are installed on the vehicle.
- The tires are replaced or worn.
- The tire pressure for the tires is incorrect.
- This is the first navigation use after the map data is updated.
- The 12-volt battery has been disconnected for several days.
- The vehicle is driving in heavy traffic where driving is at low speeds, and the vehicle is stopped and started repeatedly.

Problems with Route Guidance

Inappropriate route guidance can occur under one or more of the following conditions:

- The turn was not made on the road indicated.
- Route guidance might not be available when using automatic rerouting for the next right or left turn.
- The route might not be changed when using automatic rerouting.
- There is no route guidance when turning at an intersection.
- Plural names of places might be announced occasionally.
- It could take a long time to operate automatic rerouting during high-speed driving.
- Automatic rerouting might display a route returning to the set waypoint if heading for a destination without passing through a set waypoint.
- The route prohibits the entry of a vehicle due to a regulation by time or season or any other regulation which may be given.
- Some routes might not be searched.
- The route to the destination might not be shown if there are new roads, if roads have recently changed, or if certain roads are not listed in the map data. See *Maps* ⇨ *153*.

To recalibrate the vehicle's position on the map, park with the vehicle running for two to five minutes, until the vehicle position updates. Make sure the vehicle is parked in a location that is safe and has a clear view of the sky and away from large obstructions.

If the System Needs Service

If the navigation system needs service, see your dealer.

Map Data Updates

The map data in the vehicle is the most up-to-date information available when the vehicle was produced.

See www.gmnavdisc.com for details on ordering, purchasing, and installing a new or replacement SD card. Features are subject to change. For more information on this feature, see my.cadillac.com/learn.

Database Coverage Explanations

Coverage areas vary with respect to the level of map detail available for any given area. Some areas feature greater levels of detail than others. If this happens, it does not mean there is a problem with the system. As the map data is updated, more detail can become available for areas that previously had limited detail. See *Map Data Updates* ⇨ *163*.

Voice Recognition

If equipped, voice recognition allows for hands-free operation within the navigation, audio, phone, and weather applications. This feature can be started by pressing on the steering wheel or touching on the infotainment display.

However, not all features within these areas are supported by voice commands. Generally, only complex tasks that require multiple manual interactions to complete are supported by voice commands.

For example, tasks that take more than one or two touches, such as a song or artist to play from a media device, would be supported by voice commands. Other tasks, like adjusting the volume or seeking up or down, are audio features that are easily performed by touching one or two options, and are not supported by voice commands.

In general there are flexible ways to speak commands for completing the tasks.

If your language supports it, try stating a one-shot command, such as “Directions to address <number, street, city, state/province>.” Do not include the ZIP code while stating the address during the command. Another example of a one-shot Destination Entry command is, “Directions to Place of Interest at <hotel>.” If these commands do not work, try saying, “Take me to Place of Interest” or “Find address” and the system will walk you through by asking additional questions.

Hybrid Speech Recognition

If equipped, this feature helps distinguish words by using Internet-based information along with the system's voice recognition database. This allows you to speak more naturally when using voice recognition.

Using Voice Recognition

Voice recognition becomes available once the system has been initialized. This begins when the ignition is turned on. Initialization may take a few moments.

1. Press on the steering wheel controls to activate voice recognition.
2. The audio system mutes and the system plays a prompt.
3. Clearly speak one of the commands described in this section.

   A voice recognition system prompt can be interrupted while it is playing by pressing again.

Once voice recognition is started, both the infotainment display and instrument cluster show the selections and visual dialog content. These displays can be turned on or off in the Tutorial Mode under *Settings* ⇨ *176*.

There are three voice prompt modes supported:

- Informative verbal prompts: This type of prompt will provide more information regarding the supported actions.
- Short prompts: This type of prompt will provide simple instructions about what can be stated.
- Auto informative prompts: This type of prompt plays during the first few speech sessions, then automatically switches to the short prompt after some experience has been gained through using the system.

If a command is not spoken, the voice recognition system says a help prompt.

Prompts and Infotainment Displays

While a voice recognition session is active, there may be corresponding options showing on the displays. A selection can be made by manually touching the option, or by speaking the number for the option to select.

Manual interaction in the voice recognition session is permitted. Interaction during a voice session may be completed entirely using voice commands while some manual commands may expedite a task. If a selection is made using a manual control, the voice recognition dialog will progress in the same way as if the selection were made using a voice command. Once the system completes the task, or the session is terminated, the voice recognition dialog stops.

An example of this type of manual intervention is touching an entry of a displayed number list instead of speaking the number associated with the entry desired.

Canceling Voice Recognition

- Touch or say "Cancel" or "Exit" to terminate the voice recognition session and show the display where voice recognition was initiated.
- Press on the steering wheel controls to terminate the voice recognition session and show the display where voice recognition was initiated.

Natural Language Commands

Most languages do not support natural language commands in sentence form. For those languages, use direct commands like the examples shown on the display.

Helpful Hints for Speaking Commands

Voice recognition can understand commands that are naturally stated in sentence form or direct commands that state the application and the task.

For best results:

- Listen for the prompt before saying a command or reply.
- Speak the command naturally, not too fast, not too slow.
- Use direct commands without a lot of extra words. For example, “Call <name> at work,” “Play” followed by the artist or song name, or “Tune” followed by the radio station number.
- Navigation destinations can be made in a single command using keywords. A few examples are: “I want directions to an address,” “I need to find a place of interest or (POI),” or “Find contact.”

  The system responds by requesting more details. For other POIs, say the name of a category like “Restaurants,” “Shopping Malls,” or “Hospitals.”
- Navigating to a destination outside of the current country takes more than one command. The first command is to tell the system where the navigation will take place, such as an Address, Intersection, POI, or Contact. If Address or Intersection is selected, the second command is to say, “Change Country.” Once the system responds, say the country before saying the rest of the address and/or intersection.

  If POI is asked for, say “Change Location,” then “Change Country.”

Direct commands might be more clearly understood by the system. An example of a direct command would be “Call <number>.” Examples of these direct commands are displayed on most of the screens while a voice session is active. If “Phone” or “Phone Commands,” is spoken, the system understands that a phone call is requested and will respond with questions until enough details are gathered to make a call.

If a cell phone number has been saved with a name and a place, the direct command should include both, for example “Call <name> at work.”

Using Voice Recognition for List Options

When a list is displayed, a voice prompt will ask to confirm or select an option from that list.

When a display contains a list, there may be options that are available but not displayed. The list on a voice recognition screen functions the same as a list on other displays. Scrolling or flinging can be used to help display other entries from the list.

Manually scrolling or paging the list on a display during a voice recognition session suspends the current voice recognition event and plays the prompt “Please select manually or touch the Back icon on the infotainment display to try again.”

If manual selection takes more than 15 seconds, the session terminates and prompts that it has timed out. The display returns to the display where voice recognition was initiated.

The Back Command

Say “Back” or touch the Back icon on the infotainment display to go to the previous menu.

If in voice recognition, and “Back” is spoken all the way back to the starting display, and then “Back” is spoken one more time, the voice recognition session will cancel.

Help

Say “Help” on any voice recognition display and the help prompt for the display is played.

Voice Recognition for the Radio

If browsing the audio sources when voice is touched, the voice recognition commands for AM, FM, and SiriusXM (if equipped) are available.

“Switch to AM” : Switch bands to AM and tune to the last AM radio station.

“Switch to FM” : Switch bands to FM and tune to the last FM radio station.

“Switch to SXM” : Switch bands to SiriusXM and tune to the last SiriusXM channel.

“Tune to <AM frequency> AM” : Tune to the radio station whose frequency is identified in the command (like “nine fifty”).

“Tune to <FM frequency> FM” : Tune to the radio station whose frequency is identified in the command (like “one oh one point one”).

“Tune to <AM frequency> AM HD” : Tune to the HD Radio station (if equipped) whose frequency is identified in the command.

“Tune to <FM frequency> FM HD” : Tune to the HD Radio station (if equipped) whose frequency is identified in the command.

“Tune to <FM frequency> FM HD <HD channel number>” : Tune to the HD Radio station (if equipped) whose frequency and HD channel are identified in the command.

“Tune to SXM <SXM channel number>” : Tune to the SiriusXM radio station whose channel number is identified in the command.

“Tune to SXM <SXM channel name>” : Tune to the SiriusXM radio station whose channel name is identified in the command.

Voice Recognition for Audio MyMedia

The available voice recognition commands for [browsing] MyMedia are:

“Play Artist” : Begin a dialog to enter a specific artist name.

“Play Artist <artist name>” : Begin playback of a specific artist.

“Play Album” : Begin a dialog to enter a specific album name.

“Play Album <album name>” : Begin playback of a specific album.

“Play Song” : Begin a dialog to enter a specific song name.

“Play Song <song name>” : Begin playback of a specific song, if available.

“Play Genre” : Begin a dialog to enter a specific genre.

“Play Genre <genre name>” : Begin playback of a specific genre.

“Play Playlist” : Begin a dialog to enter a specific playlist name.

“Play Playlist <playlist name>” : Begin playback of a specific playlist.

“Play <device name>” : Play music from a specific device identified by name. The device name is the name displayed on the display when the device is first selected as an audio source.

“Play Chapter” : Begin a dialog to enter a specific name.

“Play Chapter <chapter name>” : Begin playback of a specific chapter.

“Play Audiobook” : Begin a dialog to enter a specific audiobook.

“Play Audiobook <audiobook name>” : Begin playback of a specific audiobook.

“Play Episode” : Begin a dialog to enter a specific name.

“Play Episode <episode name>” : Begin playback of a specific episode.

“Play Podcast” : Begin a dialog to enter a specific podcast.

“Play Podcast <podcast name>” : Begin playback of a specific podcast.

“My Media” : Begin a dialog to enter the desired media content.

Handling Large Amounts of Media Content

It is expected that large amounts of media content will be brought into the vehicle. It may be necessary to handle large amounts of media content in a different way than smaller amounts of media. The system may limit the options of voice recognition by not allowing selection of files by voice at the highest level if the number of files exceeds the maximum limit.

Changes to voice commands due to media content limits are:

- Files including other individual files of all media types such as songs, audiobook chapters, podcast episodes, and videos.
- Album type folders including types such as albums and audiobooks.

There are no restrictions if the number of files and albums is fewer than 12,000. When the number of files connected to the system is between 12,000 and 24,000, the content cannot be accessed directly with one command like “Play <song name>.”

The restriction is that the command “Play Song” must be spoken first; the system will then ask for the song name. The reply command would be to say the name of the song to play.

Similar limits exist for album content. If there are more than 12,000 albums, but fewer than 24,000, the content cannot be accessed directly with one command like, “Play <album name>.”

The command “Play Album” must first be spoken; the system will then ask for the album name. The reply would be to say the name of the album to play.

Once the number of files has exceeded approximately 24,000, there is no support for accessing the songs directly through voice commands. There will still be access to the media content by using commands for playlists, artists, and genres.

The access commands for playlists, artists, and genres are prohibited after the number of this type of media exceeds 12,000.

The system will provide feedback the first time voice recognition is initiated if it has become apparent that any of these limits are reached during a device initializing process.

Voice recognition performance will degrade to some extent based on many factors when adding large amounts of data to recognize. If this is the case, perhaps accessing songs through playlists or artist name would work better.

Voice Recognition for Navigation (If Equipped)

“Navigation” : Begin a dialog to enter specific destination information.

“Navigation Commands” : Begin a dialog to enter specific destination information.

“Address” : Begin a dialog to enter a specific destination address, which includes the entire address consisting of the house number, street name, city, state/province, and country. Do not include the ZIP code.

“Place of Interest” : Begin a dialog to enter a destination Place of Interest category or major brand name.

The name must be precisely spoken. Nicknames or short names for the businesses will not likely be found. Lesser known businesses might have to be located by category, such as fast food, hotels, or banks.

“Navigate to Contact” : Begin a dialog to enter a specific destination contact name.

“Cancel Route” : End route guidance.

“Take Me Home” : Create a route to a stored home location.

Voice Recognition for the Phone

“Call <contact name>” : Initiate a call to a stored contact. The command may include location if the contact has location numbers stored.

“Call <contact> At Home,” “At Work,” “On Mobile,” or “On Other” : Initiate a call to a stored contact and location at home, at work, on mobile device, or on another phone.

“Call <cell phone number>” : Initiate a call to a cell phone number of seven digits, 10 digits, or three digit emergency numbers.

“Pair Phone” : Begin the Bluetooth pairing process. Follow the instructions on the infotainment display.

“Redial” : Initiate a call to the last dialed number.

“Switch Phone” : Select a different connected cell phone for outgoing calls.

"Voice Keypad" : Begin a dialog to enter special numbers like international numbers. The numbers can be entered in groups of digits with each group of digits being repeated back by the system. If the group of digits is not correct, the command "Delete" will remove the last group of digits and allow them to be re-entered. Once the entire number has been entered, the command "Call" will start dialing the number.

Phone Assistant Voice Recognition

Press and hold on the steering wheel controls to pass through and launch Google phone assistant or Siri.

For the low radio, whether connected by Bluetooth or phone projection, the only available voice recognition is either Siri (iPhone) or the Google Assistant (Android).

Phone

Bluetooth (Overview)

The Bluetooth-capable system can interact with many mobile devices, allowing:

- Placement and receipt of calls in a hands-free mode.
- Sharing of the device's address book or contact list with the vehicle.

To minimize driver distraction, before driving, and with the vehicle parked:

- Become familiar with the features of the mobile device. Organize the phone book and contact lists clearly and delete duplicate or rarely used entries. If possible, program speed dial or other shortcuts.
- Review the controls and operation of the infotainment system.
- Pair mobile device(s) to the vehicle. The system may not work with all mobile devices. See "Pairing" later in this section.

Vehicles with a Bluetooth system can use a Bluetooth-capable mobile device with a Hands-Free Profile to make and receive phone calls. The infotainment system and voice recognition are used to control the system. The system can be used while the ignition is on or in ACC/ACCESSORY. The range of the Bluetooth system can be up to 9.1 m (30 ft). Not all mobile devices support all functions and not all mobile devices work with the Bluetooth system. See my.cadillac.com for more information about compatible mobile devices.

Controls

Use the controls on the center stack and the steering wheel to operate the Bluetooth system.

Steering Wheel Controls

: Press to answer incoming calls and start voice recognition on your connected Bluetooth mobile device.

: Press to end a call, decline a call, or cancel an operation. Press to mute or unmute the infotainment system when not on a call.

Infotainment System Controls

For information about how to navigate the menu system using the infotainment controls, see *Using the System* ⇨ *137*.

Audio System

When using the Bluetooth mobile device system, sound comes through the vehicle's front audio system speakers and overrides the audio system. The volume level while on a mobile device call can be adjusted by pressing the steering wheel controls or the volume control on the center stack. The adjusted volume level remains in memory for later calls. The volume cannot be lowered beyond a certain level.

Bluetooth (Pairing and Using a Phone)

Pairing

A Bluetooth-enabled mobile device must be paired to the Bluetooth system and then connected to the vehicle before it can be used. See the mobile device manufacturer's user guide for Bluetooth functions before pairing the device.

Pairing Information

- If no mobile device has been connected, the Phone main page on the infotainment display will show the Connect Phone option. Touch this option to connect. Another way to connect is to touch the Phones tab at the top right of the display and then touch Add Phone.
- A Bluetooth smartphone with music capability can be paired to the vehicle as a smartphone and a music player at the same time.
- Up to 10 devices can be paired to the Bluetooth system.
- The pairing process is disabled when the vehicle is moving.
- Pairing only needs to be completed once, unless the pairing information on the cell phone changes or the cell phone is deleted from the system.
- If multiple paired cell phones are within range of the system, the system connects to the paired cell phone that is set to First to Connect. If there is no cell phone set to First to Connect, it will link to the cell phone which was used last. To link to a different paired cell phone, see “Linking to a Different Phone” later in this section.

Near Field Communication (NFC)

If equipped, Near Field Communication (NFC) allows compatible smartphones to be paired to the infotainment system. To begin the pairing process:

1. Refer to the smartphone’s user manual to verify it is NFC-compatible.
2. Unlock the smartphone.
3. Enable both NFC and Bluetooth on the smartphone if either is disabled. The NFC icon should be in the status bar of the smartphone.
4. Hold the smartphone 2.54 cm (1 in) or less from the NFC icon on the center stack.
5. Once pairing begins, a pop-up message with a six-digit code will appear on the smartphone and the infotainment display.

6. Select Yes on the smartphone to confirm the pairing process.
   A chime will sound when pairing begins.

Multiple smartphones can be paired using this technology.

Functionality varies by model and region. Full functionality requires compatible Bluetooth and smartphone, as well as USB connectivity for some devices.

Pairing a Phone

1. Make sure Bluetooth has been enabled on the cell phone before the pairing process is started.
2. Touch the Phone icon on the Home Page or the phone icon on the shortcut tray near the bottom of the display.
3. Touch Phones at the top of the infotainment display. There is also a Connect Phones option in the middle of the Phone display which will shortcut to the Phone List menu.
4. Touch Add Phone.
5. Select the vehicle name shown on the infotainment display from your cell phone's Bluetooth Settings list.
6. Follow the instructions on the cell phone to confirm the six-digit code showing on the infotainment display and touch Pair. The code on the cell phone and infotainment display will need to be acknowledged for a successful pair.
7. Start the pairing process on the cell phone to be paired to the vehicle. See the cell phone manufacturer's user guide for information on this process. Once the cell phone is paired, it will show under Connected.
8. If the vehicle name does not appear on your cell phone, there are a few ways to start the pairing process over:
   - Turn the cell phone off and then back on.
   - Go back to the beginning of the Phone menus on the infotainment display and restart the pairing process.
   - Reset the cell phone, but this step should be done as a last effort.
9. If the cell phone prompts to accept connection or allow phone book download, touch Always Accept and Allow. The phone book may not be available if not accepted.
10. Repeat Steps 1–8 to pair additional cell phones.

First to Connect Paired Phones

If multiple paired cell phones are within range of the system, the system connects to the paired cell phone that is set as First to Connect. To enable a paired cell phone as the First to Connect phone:

1. Make sure the cell phone is turned on.
2. Touch Settings, then touch System.
3. Touch Phones to access all paired and all connected cell phones and mobile devices.
4. Touch the information icon to the right of the cell phone to open the cell phone's settings menu.

5. Touch the First to Connect option, to enable the setting for that device.

Cell phones and mobile devices can be added, removed, connected, and disconnected. A sub-menu will display whenever a request is made to add or manage cell phones and mobile devices.

Secondary Phone

A cell phone can be enabled as a Secondary Phone by touching the information icon to the right of the paired cell phone name to open the phone settings menu. If a cell phone is enabled as a Secondary Phone, it can connect simultaneously alongside another Bluetooth mobile device. In doing so, the Secondary Phone will be labeled as Incoming Calls. This means the mobile device can only receive calls. The Address Book of a Secondary Phone will not be available and hands-free outgoing calls cannot be placed using this cell phone.

If needed, touch the Secondary Phone while in the Phones list to swap it into the Outgoing and Incoming role. This role makes it possible to place outgoing calls from the Contacts and Recents list.

Listing All Paired and Connected Phones

1. Touch the Phone icon on the Home Page or the phone icon on the shortcut tray near the bottom of the display.
2. Touch Phones.

Disconnecting a Connected Phone

1. Touch the Phone icon on the Home Page.
2. Touch Phones.
3. Touch the information icon next to the connected cell phone or mobile device to show the cell phone's or mobile device's information display.
4. Touch Disconnect.

Deleting a Paired Phone

1. Touch the Phone icon on the Home Page or the phone icon on the shortcut tray near the bottom of the display.
2. Touch Phones.
3. Touch the information icon next to the connected cell phone to display the cell phone's or mobile device's information display.
4. Touch Forget Device.

Linking to a Different Phone

To link to a different cell phone, the new cell phone must be in the vehicle and paired to the Bluetooth system.

1. Touch the Phone icon on the Home Page or the phone icon on the shortcut tray near the bottom of the display.
2. Touch Phones.
3. Touch the new cell phone to link to from the not connected phone list. See "First to Connect Paired Phones" and "Secondary Phone" previously in this section.

Switching to Handset or Handsfree Mode

To switch between handset or handsfree mode:

- While the active call is hands-free, touch the Handset option to switch to the handset mode.

The mute icon will not be available or functional while Handset mode is active.

- While the active call is on the handset, touch the Handset option to switch to the hands-free mode.

Making a Call Using Contacts and Recent Calls

Calls can be made through the Bluetooth system using personal cell phone contact information for all cell phones that support the Phone Book feature. Become familiar with the cell phone settings and operation. Verify the cell phone supports this feature.

The Contacts menu accesses the phone book stored in the cell phone.

The Recents menu accesses the recents call list from your cell phone.

To make a call using the Contacts menu:

1. Touch the Phone icon on the Home Page.
2. Touch Contacts.
3. The Contacts list can be searched by using the first character. Touch A-Z on the infotainment display to scroll through the list of names.

   Touch the name to call.
4. Touch the desired contact number to call.

To make a call using the Recents menu:

1. Touch Phone on the Home Page.
2. Touch Recents.
3. Touch the name or number to call.

Making a Call Using the Keypad

To make a call by dialing the numbers:

1. Touch the Phone icon on the Home Page.
2. Touch Keypad and enter a phone number.
3. Touch on the infotainment display to start dialing the number.

Searching Contacts Using the Keypad

To search for contacts using the keypad:

1. Touch the Phone icon on the Home Page.
2. Touch Keypad and enter partial phone numbers or contact names using the digits on the keypad to search.

   Results will show on the right side of the display. Touch one to place a call.

Accepting or Declining a Call

When an incoming call is received, the infotainment system mutes and a ring tone is heard in the vehicle.

Accepting a Call

There are two ways to accept a call:

- Press on the steering wheel controls.
- Touch Answer on the infotainment display.

Declining a Call

There are two ways to decline a call:

- Press on the steering wheel controls.
- Touch Ignore on the infotainment display.

Call Waiting

Call waiting must be supported on the Bluetooth cell phone and enabled by the wireless service carrier to work.

Accepting a Call

Press to answer, then touch Switch on the infotainment display.

Declining a Call

Press to decline, then touch Ignore on the infotainment display

Switching Between Calls (Call Waiting Calls Only)

To switch between calls, touch Phone on the Home Page to display Call View. While in Call View, touch the call information of the call on hold to change calls.

Three-Way Calling

Three-way calling must be supported on the Bluetooth cell phone and enabled by the wireless service carrier to work.

To start a three-way call while in a current call:

1. In the Call View, touch Add Call to add another call.
2. Initiate the second call by selecting from Recents, Contacts, or Keypad.
3. When the second call is active, touch the merge icon to conference the three-way call together.

Ending a Call

- Press on the steering wheel controls.
- Touch on the infotainment display, next to a call, to end only that call.

Dual Tone Multi-Frequency (DTMF) Tones

The in-vehicle Bluetooth system can send numbers during a call. This is used when calling a menu-driven phone system. Use the Keypad to enter the number.

Apple CarPlay and Android Auto

If equipped, Android Auto and/or Apple CarPlay capability may be available through a compatible smartphone. If available, the Android Auto and Apple CarPlay icons will change from gray to color on the Home Page of the infotainment display.

To use Android Auto and/or Apple CarPlay:

For Wired Phone Projection

1. Download the Android Auto app to your smartphone from the Google Play store. There is no app required for Apple CarPlay.
2. Connect your Android phone or Apple iPhone by using the factory-provided phone USB cable

and plugging into a USB data port. For best performance, it is highly recommended to use the device's factory-provided USB cable, which should be replaced after significant wear to maintain connection quality. Aftermarket or third-party cables may not work.

3. When the phone is first connected to activate Apple CarPlay or Android Auto, accept the terms and conditions on both the infotainment system and the phone.
4. Follow the instructions on the phone.

The Android Auto and Apple CarPlay icons on the Home Page will illuminate depending on the smartphone. Android Auto and/or Apple CarPlay may automatically launch upon USB connection. If not, touch the Android Auto or Apple CarPlay icon on the Home Page to launch.

Press ⌂ on the center stack to return to the Home Page.

For Wireless Phone Projection

Verify your phone is wireless compatible by visiting the Google Android Auto or Apple CarPlay support page.

1. Download the Android Auto app to your smartphone from the Google Play store. There is no app required for Apple CarPlay.
2. For first time connection, there are two ways to set up wireless projection:
   - Connect your Android phone or Apple iPhone by using the factory-provided phone USB cable and plugging into a USB data port. For best performance, it is highly recommended to use the device's factory-provided USB cable, which should be replaced after significant wear to maintain connection quality. Aftermarket or third-party cables may not work.
   - Connecting the phone over Bluetooth. See *Bluetooth (Overview)* ⇨ *169* or *Bluetooth (Pairing and Using a Phone)* ⇨ *170*.
3. Make sure WiFi is turned on the phone for wireless projection to work.
4. When the phone is first connected to activate Apple CarPlay or Android Auto, agree to the terms and conditions on both the infotainment system and the phone.
5. Follow the instructions on the phone.

The Android Auto and Apple CarPlay icons on the Home Page will illuminate depending on the smartphone. Android Auto and/or Apple CarPlay may automatically launch upon wireless connection. If not, touch the Android Auto or Apple CarPlay icon on the Home Page to launch.

To disconnect the phones wireless projection:

1. Select Settings from the Home Page.
2. Select Phones
3. Touch ℹ next to the phone to be disconnected.

4. Turn off Apple CarPlay or Android Auto.

Press ⌂ on the center stack to return to the Home Page.

Features are subject to change. For further information on how to set up Android Auto and Apple CarPlay in the vehicle, see my.cadillac.com.

Android Auto is provided by Google and is subject to Google's terms and privacy policy. Apple CarPlay is provided by Apple and is subject to Apple's terms and privacy policy. Data plan rates apply. For Android Auto support and to see if your phone is compatible, see https://support.google.com/androidauto. For Apple CarPlay support and to see if your phone is compatible, see www.apple.com/ios/carplay/. Apple or Google may change or suspend availability at any time. Android Auto, Android, Google, Google Play, and other marks are trademarks of Google Inc.; Apple CarPlay is a trademark of Apple Inc.

Press ⌂ on the center stack to exit Android Auto or Apple CarPlay. To enter back into Android Auto or Apple CarPlay, press and hold ⌂ on the center stack.

Apple CarPlay and Android Auto can be disabled from the infotainment system. To do this, touch Home, Settings, and then touch the Apps tab along the top of the display. Use the On/Off toggled to turn off Apple CarPlay or Android Auto.

Settings

Certain settings can be managed in the Owner Center sites when an account is established, and may be modified if other users have accessed the vehicle or created accounts. This may result in changes to the security or functionality of the infotainment system. Some settings may also be transferred to a new vehicle, if equipped. For instructions, in the U.S. see my.cadillac.com or in Canada see mycadillac.ca or moncadillac.ca.

Refer to the User Terms and Privacy Statement for important details. To view, touch the Settings icon on the Home Page of the infotainment display.

The settings menu may be organized into four categories. Select the desired category by touching System, Apps, Vehicle, or Personal.

To access the personalization menus:

1. Touch Settings on the Home Page on the infotainment display.
2. Touch the desired category to display a list of available options.
3. Touch to select the desired feature setting.
4. Touch the options on the infotainment display to disable or enable a feature.
5. Touch ✕ to go to the top level of the Settings menu.

System

The menu may contain the following:

Time / Date

Use the following features to set the clock:

- Automatic Time and Date: Touch Off or On to enable or disable automatic update of the time and date. When this feature is on, the time and date cannot be manually set.
- Set Time: Touch to manually set the time using the controls on the infotainment display.
- Set Date: Touch to manually set the date using the controls on the infotainment display.
- Automatic Time Zone: If equipped, touch Off or On to disable or enable automatic update of the time zone based on vehicle location. When this feature is on, the time zone cannot be manually set.
- Select Time Zone: Touch to manually set the time zone. Touch a time zone from the list.
- Use 24-hour Format: Touch to specify the clock format shown.

  Touch Off or On to disable or enable.

Language

This will set the display language used on the infotainment display. It may also use the selected language for voice recognition and audio feedback. Touch Language and touch the appropriate language.

Phones

Touch to connect to a different cell phone or mobile device source, disconnect a cell phone or media device, or delete a cell phone or media device.

Wi-Fi Networks

This will show connected and available Wi-Fi networks.

If a 4G LTE data package is not active on the vehicle, the infotainment system can be connected to an external protected Wi-Fi network, such as a mobile device or home hotspot, to utilize connected services.

Wi-Fi Hotspot

Touch and the following may display:

- Wi-Fi Services: This allows devices to use the vehicle hotspot.

  Touch the controls on the infotainment display to disable or enable.
- Wi-Fi Name: Touch to change the vehicle Wi-Fi name.
- Wi-Fi Password: Touch to change the vehicle Wi-Fi password.
- Connected Devices: Touch to show connected devices.
- Share Hotspot Data: Touch On to allow devices to use the vehicle hotspot and its data, or touch Off to allow devices to only use the vehicle hotspot but not its data.

Privacy

Touch and the following may display:

- Location Services: This setting enables or disables sharing of vehicle location outside the vehicle. Emergency services will not be affected when Off is selected.

- Data Services: If equipped, this setting determines if data sharing can be used by features including Wi-Fi, Hotspot, and applications. Touch Off to disable data services. Emergency services and phone calls, such as calls with OnStar Advisors or others, will not be affected when Off is selected.
- Voice Recognition Sharing: This setting determines if voice commands can be shared with a cloud-based voice recognition system. Touch Off to prevent the sharing and possible recording of your voice commands with this system. This may limit the system's ability to understand your voice commands and may disable some features.
- Types: This setting lists all Android-defined as dangerous permissions currently used by the infotainment system, the number of applications that have requested this permission, and the number of applications that are allowed to use this permission.
- Used By Applications: This setting lists all applications that are requested or are using Android-defined as dangerous permissions. Only requested and active permissions are shown.

Display

Touch and the following may display:

- Mode: This adjusts the appearance of the navigation map view and any downloaded apps optimized for day or night time conditions. Set to Auto for the display to automatically adjust based on bright/dark conditions.

  Touch Auto, Day, or Night to adjust the display.
- Calibrate Touchscreen: Touch to calibrate the infotainment display and follow the prompts.
- Turn Display Off: Touch to turn the display off. Touch anywhere on the infotainment display or press any infotainment control on the center stack again to turn the display on.

Sounds

Touch and the following may display:

- Maximum Startup Volume: This feature adjusts the maximum volume of the infotainment system when you start the vehicle. To set the maximum startup volume, touch the controls on the infotainment display to increase or decrease.
- Audio Cues: This feature determines if sounds play when the infotainment system starts up and shuts down. This feature can be turned off or on.
- Set Audio Cue Volume: This setting controls the volume of Audio Cues played on startup and shutdown. Touch the controls on the infotainment display to increase or decrease.
- Audible Touch Feedback: This setting determines if a sound plays when touching the infotainment display or radio controls. This feature can be turned off or on.

Voice

Touch and the following may display:

- Confirm More/Less: This setting specifies how often the voice recognition system confirms commands. Touch Confirm More to have the system check with you more often before acting on your commands.
- Prompt Length: This setting specifies the amount of detail the voice recognition system provides when giving you feedback. Touch Auto to have the system automatically adjust to your speech habits. Touch Informative, Short, or Auto.
- Audio Feedback Speed: Touch Slow, Medium, or Fast to adjust how quickly the voice recognition system speaks.
- Friendly Prompts: This setting adjusts the formality of voice prompts. Touch Off for shorter prompts. Touch On to hear prompts with more personality. Touch Auto to have the prompt match your command style.
- Tutorial Mode: Touch Off or On to provide tutorial feedback on the display.
- Allow Prompt Interruptions: This setting controls whether voice commands can be spoken before voice prompts finish. Turn this on to speak commands without hearing the full prompt. Speaking while the prompt is still playing will immediately stop playing the current prompt and recognize your command. Background noise may cause accidental interruptions. Touch Off or On.

Favorites

Touch and the following may display:

- Manage Favorites: Touch to display a list of Audio, Phone, and Navigation favorites.

  Favorites can be moved, renamed, or deleted.

  To move, touch and hold the favorite, and then drag up or down to rearrange the position.
- Set Number of Audio Favorites: Touch to select how many favorites pages can be viewed from the audio application. The Auto setting will automatically adjust this number based on the number of favorites you have saved. Touch Auto, 5, 10, 15, 20, 25, 30, 35, or 40.

Updates

If equipped, the vehicle can download and install select software updates over a wireless connection. The system will prompt for certain updates to be downloaded and installed. There is also an option to check for updates manually.

To manually check for updates, touch Settings on the Home Page and select the System tab. Go to the Vehicle Software section and touch Updates. Follow the on-screen prompts. The steps to check for, download, and install updates may vary by vehicle.

The vehicle can be used normally during the software download. Once the download is complete, there may be a prompt to accept the installation of the update upon the next ignition cycle or the next time the vehicle is shifted into P (Park). For most updates, the vehicle will be disabled and cannot be driven during the

installation. The system will deliver messages indicating success or error during and after the download and installation processes.

Downloading Over-the-Air vehicle software updates requires Internet connectivity, which can be accessed through the vehicle's built-in 4G LTE connection, if equipped and active. If required, data plans are provided by a third party. Optionally, a secure Wi-Fi hotspot such as a compatible mobile device hotspot, home hotspot, or public hotspot can be used. Applicable data rates may apply.

To connect the infotainment system to a secured mobile device hotspot, home hotspot, or public hotspot, touch Settings on the Home Page, select the System tab, followed by Wi-Fi Networks. Select the appropriate Wi-Fi network, and follow the on-screen prompts. Download speeds may vary.

On most compatible mobile devices, activation of the Wi-Fi hotspot is in the Settings menu under Mobile Network Sharing, Personal Hotspot, Mobile Hotspot, or similar.

Availability of Over-the-Air software updates varies by vehicle and country. Features are subject to change. For more information on this feature, see my.cadillac.com/learn.

Preferences

Touch the controls on the infotainment display to disable or enable the download of new updates in the background.

About

Touch to view the infotainment system software information.

Running Applications

Touch to see a complete list of applications that are currently running on the infotainment system.

Return to Factory Settings

Touch and the following may display:

- Reset Vehicle Settings: Resets all vehicle settings for the current user.

  Touch Reset or Cancel.
- Erase Settings and Personal Data: Erases app data settings, user profiles, and personal data including navigation and mobile device data.

  Touch Erase or Cancel.
- Clear Default Applications: Resets preferred applications that have been set to open when selecting a function. No application data will be lost.

  Touch Clear or Cancel.

Apps

The menu may contain the following:

Android Auto

This feature allows you to interact directly with your mobile device on the infotainment display. See *Apple CarPlay and Android Auto* ⇨ *174*.

Touch the controls on the infotainment display to disable or enable.

Apple CarPlay

This feature allows you to interact directly with your mobile device on the infotainment display. See *Apple CarPlay and Android Auto* ⇨ *174*.

Touch the controls on the infotainment display to disable or enable.

Apps

Touch and the following may display:

- Update Apps Automatically: This allows downloaded applications to be updated automatically.

  Touch the controls on the infotainment display to disable or enable.
- About Apps: Touch to view the versions of the apps software.

Audio

Depending on the current audio source, different options will be available.

Touch and the following may display:

- Tone Settings: Touch to adjust Equalizer, Fade/Balance, or Sound Mode. See “Infotainment System Sound Menu” in *AM-FM Radio* ⇨ *141*.
- Adaptive Volume: This feature adjusts the volume based on the vehicle speed.

  Touch Off, Low, Medium-Low, Medium, Medium-High, or High.
- Bose AudioPilot Noise Compensation Technology (If Equipped): This feature adjusts the volume based on the noise in the vehicle and the speed.

  Touch Off or On.
- Manage Favorites: Touch to display a list of Audio, Mobile Devices, and Navigation favorites.

  Favorites can be moved, renamed, or deleted.

  To move, touch and hold the favorite, and then drag up or down to rearrange the position.
- Set Number of Audio Favorites: Touch to select how many favorites pages can be viewed from the audio application. The Auto setting will automatically adjust this number based on the number of favorites you have saved. Touch Auto, 5, 10, 15, 20, 25, 30, 35, or 40.
- RDS: This allows the Radio Data System (RDS) to be turned on or off.

  Touch the controls on the infotainment display to disable or enable.
- HD Radio: This allows HD Radio reception to be turned on or off.

  Touch the controls on the infotainment display to disable or enable.
- Explicit Content Filter: This setting allows access to explicit content SiriusXM channels.

  Touch Off or On.
- Manage Phones: Select to connect to a different phone source, disconnect a phone, or delete a phone.
- Reset Music Index: This allows the music index to be reset if you are having difficulty accessing all of the media content on your device.

  Touch Yes or No.

Climate

Touch and the following may display:

- Auto Fan Speed: This setting specifies the amount of airflow when the climate control fan setting is Auto Fan.

  Touch Low, Medium, or High.

- Air Quality Sensor: This setting switches the system into Recirculation Mode based on the quality of the outside air.

  Touch Off, Low Sensitivity, or High Sensitivity.
- Auto Cooled Seats: This setting automatically turns on and regulates the ventilated seats when the cabin temperature is warm.

  Touch the controls on the infotainment display to disable or enable.
- Auto Heated Seats: This setting automatically turns on and regulates the heated seats when the cabin temperature is cool. The auto heated seats can be turned off by using the heated seat controls on the center stack.

  Touch the controls on the infotainment display to disable or enable.
- Auto Defog: This setting automatically turns the front defogger on when the vehicle engine is started.

  Touch the controls on the infotainment display to disable or enable.
- Auto Rear Defog: This setting automatically turns the rear defogger on when the vehicle engine is started.

  Touch the controls on the infotainment display to disable or enable.
- Ionizer: This setting purifies the air in the interior of the vehicle..

  Touch the controls on the infotainment display to disable or enable.

Navigation

Touch and the following may display:

- Destination Card Preferences
- Map Preferences
- Route Preferences
- Navigation Voice Control
- Traffic Preferences
- Alert Preferences
- Fuel Grade Preferences
- Manage History
- Predictive Navigation (if equipped)
- About

See *Using the Navigation System* ➪ *150*.

Phone

Touch and the following may display:

- My Number: Displays the cell phone number of the Bluetooth connected device.
- Active Call View: Shows active call display when answering a call.

  Touch the controls on the infotainment display to disable or enable.
- Privacy: Only show call alerts in the instrument cluster.

  Touch Off or On.
- Sort Contacts: Touch to sort by first or last name.
- Re-sync Device Contacts: Allows the device contacts to re-sync if you are having difficulty accessing all of the contacts on your cell phone.
- Delete All Vehicle Contacts: Touch to delete all vehicle stored contacts.
- OnStar Phone TTY Mode: This enables OnStar cell phone TTY mode.

  Touch Disable or Enable.

SiriusXM

Touch and the following may display:

- Account Information: Displays the account information and subscription information.
- Listener Options: Based on the current vehicle profile selected. Touch and the following may display:
  - SiriusXM Favorites: Favorites shown can be moved or deleted.
  - Listener Settings: Selections include hide explicit language, channels and content, reset listening history, and start songs at the beginning when tuning to a music channel.
- System Settings: Enable or disable SiriusXM location services. Also shows radio ID.
- Contact SiriusXM: Displays radio ID and phone number to call SiriusXM Customer Care.
- SiriusXM Policies: Shows information on the Customer Agreement and Privacy Policy.

Vehicle

This menu allows adjustment of different vehicle features. See *Vehicle Personalization* ⇨ *117*.

Personal

If equipped, this menu allows adjustment of different user profile settings. See “Users” in *Using the System* ⇨ *137* for information on setting up user profiles.

The menu may contain the following:

Name

Touch to edit your user name that will be displayed in the vehicle.

Vehicle Account Information

Touch to view the vehicle account information and to change the account password.

An “unverified user account” pop-up will display until the account information verification process has been completed on the Internet. Check your registered e-mail account for an activation e-mail to complete the verification process.

Profile Picture

Touch to choose or change your profile picture.

Profile Identifiers

Touch to have the vehicle recognize the identifier you choose.

Touch Vehicle Key 1 and/or Vehicle Key 2.

If the remote key is lost or stolen, see your dealer.

Security

Touch to have your profile secured with a Personal Identification Number (PIN).

Touch No or Yes.

Vehicle Name

Touch to edit your vehicle name.

Vehicle Account

Touch to view the vehicle account information and to change the account password.

Delete Profile

Touch to remove the profile from the vehicle.

Touch Remove or Cancel.

Teen Driver

If equipped, this allows multiple keys to be registered for beginner drivers to encourage safe driving habits. When the vehicle is started with a Teen Driver key, it will automatically activate certain safety systems, allow setting of some features, and limit the use of others. The Report Card will record vehicle data about driving behavior that can be viewed later. When the vehicle is started with a registered key, the Driver Information Center (DIC) displays a message that Teen Driver is active.

To access:

1. Touch Settings on the Home Page, then touch Vehicle, and then Teen Driver.
2. Create a Personal Identification Number (PIN) by choosing a four-digit PIN. Re-enter the PIN to confirm. To change the PIN, touch Change PIN.

The PIN is required to:

- Register or unregister keys.
- Change Teen Driver settings.
- Change or clear the Teen Driver PIN.
- Access or delete Report Card data.

Register keys to activate Teen Driver and assign restrictions to the key:

Any vehicle key can be registered, up to a maximum of eight keys. Label the key to tell it apart from the other keys.

For a pushbutton start system:

1. Start the engine.
2. For automatic transmissions, the vehicle must be in P (Park). For manual transmissions, the vehicle must be stopped with the parking brake set.
3. From the Settings menu, touch Vehicle and then Teen Driver.
4. Enter the PIN.
5. Place the remote key you wish to register in the rear cupholder. The key does not need to be the one that started the vehicle. See *Remote Keyless Entry (RKE) System Operation* ⇨ *7* for rear cupholder location.
6. From the Teen Driver menu, touch Setup Keys.
   - If the transmitter key has not previously been registered, the option to add the key displays. Touch Setup and a confirmation message displays. Teen Driver restrictions will be applied whenever this key is used to operate the vehicle.
   - If the transmitter key has already been registered, the option to remove the key displays. If Remove is touched, the transmitter key is no longer registered. A confirmation message displays, and Teen Driver restrictions will not be applied if this transmitter key is used to operate the vehicle.

In vehicles with a pushbutton start system, if a Teen Driver and a non-Teen Driver key are both present at start up, the vehicle will recognize the non-Teen Driver key to start the vehicle. The Teen Driver settings will not be active.

Manage Settings

Buckle To Drive : When turned ON, Buckle to Drive prevents the driver from shifting out of P (Park) for a period of time if driver seat belt, and on some vehicles, the passenger seat belt, is not buckled. See *Buckle To Drive* ⇨ *41* and *Vehicle Personalization* ⇨ *117*.

Audio Volume Limit : Allows the audio volume limit to be turned on or off. Touch Set Audio Volume Limit to choose the maximum allowable audio volume level.

Set Audio Volume Limit : Allows a maximum radio volume to be set. Use the arrows to choose the maximum allowable level for the audio volume.

Teen Driver Speed Limiter : Limits the maximum speed of the vehicle. When the speed limiter is turned on and the vehicle is started with a Teen Driver key, the DIC displays a message that the top speed is limited.

On certain vehicles, when the Speed Limiter is turned ON, the vehicle's maximum acceleration will be limited. The DIC will display a message that the acceleration is limited.

Teen Driver Speed Warning : Allows the speed warning to be turned on or off. Touch Set Teen Driver Speed Warning to set the warning speed.

Set Teen Driver Speed Warning : Displays a warning in the DIC when exceeding a selectable speed. Choose the desired speed warning level. The speed warning does not limit the speed of the vehicle.

SiriusXM Explicit Content Filter (if equipped) : Allows the SiriusXM Explicit Content Filter to be turned ON or OFF. When ON, the teen driver will not be able to listen to SiriusXM stations that contain explicit content, and the Explicit Content Filter selection in the Audio Settings will be unavailable for change.

When Teen Driver is Active:

- The radio will mute when the driver, or in some vehicles, the front passenger seat belt, is not buckled. The audio from any device paired to the vehicle will also be muted.
- If an object, such as a briefcase, handbag, grocery bag, laptop, or other electronic device, is on the front passenger seat, it could cause the radio to mute and prevent shifting from P (Park) if Buckle to Drive is ON. If this happens, remove the object from the seat. See *Passenger Sensing System* ⇨ *53*.
- Some safety systems, such as Forward Collision Alert, if equipped, cannot be turned off.
- The gap setting for the Forward Collision Alert and Adaptive Cruise Control, if equipped, cannot be changed.
- When trying to change a safety feature that is not configurable in Teen Driver, the DIC displays a message indicating that Teen Driver is active and the action is not available.

- Super Cruise, if equipped, is not available.
- Enhanced Low Fuel Warning (if equipped) – When the vehicle is low on fuel, the low fuel light on the instrument cluster flashes and the DIC low fuel warning cannot be dismissed.
- Do not tow a trailer.

Report Card

The vehicle owner must secure the driver's consent to record certain vehicle data when the vehicle is driven with a registered Teen Driver key. There is one Report Card per vehicle. Data is only recorded when a registered Teen Driver key is used to operate the vehicle.

The Report Card data is collected from the time Teen Driver is activated or the last time the Report Card was reset. The following items may be recorded:

- Distance Driven – the total distance driven.
- Maximum Speed – the maximum vehicle speed detected.
- Overspeed Warnings – the number of times the speed warning setting was exceeded.
- Wide Open Throttle – the number of times the accelerator pedal was pressed nearly all the way down.
- Forward Collision Alerts – the number of times the driver was notified when approaching a vehicle ahead too quickly and at potential risk for a crash.
- Forward Automatic Braking, also called Automatic Emergency Braking (if equipped) – the number of times the vehicle detected that a forward collision was imminent and applied the brakes.
- Reverse Automatic Braking (if equipped) – the number of times the vehicle detected that a rearward collision was imminent and applied the brakes.
- Traction Control – the number of times the Traction Control System activated to reduce wheel spin or loss of traction.
- Stability Control – the number of events which required the use of electronic stability control.
- Antilock Braking System Active – The number of Antilock Brake System activations.
- Tailgating Alerts – the number of times the driver was alerted for following a vehicle ahead too closely.

Report Card Data

Cumulative Data is saved for all trips until the Report Card is reset or until the maximum count is exceeded.
If the maximum count is exceeded for a Report Card line item, that item will no longer be updated in the Report Card until it is reset. Each item will report a maximum of 1,000 counts. The distance driven will report a maximum of 64,374 km (40,000 mi).

To delete Report Card data, do one of the following:

- From the Report Card display, touch Reset.
- Touch Clear All Teen Keys and PIN from the Teen Driver menu. This will also unregister any Teen Driver keys and delete the PIN.

Forgotten PIN

See your dealer to reset the PIN.

Trademarks and License Agreements

FCC Information

See *Radio Frequency Statement* ⇨ *409*.

Made for iPod iPhone

"Made for iPod," and "Made for iPhone," mean that an electronic accessory has been designed to connect specifically to iPod or iPhone, respectively, and has been certified by the developer to meet Apple performance standards. Apple is not responsible for the operation of this device or its compliance with safety and regulatory standards. Please note that the use of this accessory with iPod or iPhone may affect wireless performance. iPhone, iPod, iPod classic, iPod nano, iPod shuffle, and iPod touch are trademarks of Apple Inc., registered in the U.S. and other countries.

SiriusXM

If you decide to continue service after your trial, your selected subscription plan will automatically renew thereafter. You will be charged at then-current rates. Fees and taxes apply. Please see the SiriusXM Customer Agreement at siriusxm.com for complete terms and how to cancel, which includes calling SiriusXM at 1-866-635-2349. All fees and programming are subject to change.

Fees and Taxes: Subscription fee, taxes, one time activation fee, and other fees may apply. Subscription fee is consumer only. All fees and programming subject to change. Subscriptions subject to Customer Agreement available at www.siriusxm.com. SiriusXM service is only available in the 48 contiguous United States and Canada.

In Canada: Some deterioration of service may occur in extreme northern latitudes. This is beyond the control of SiriusXM Satellite Radio.

Explicit Language Notice: Channels with frequent explicit language are indicated with an “XL” preceding the channel name. Channel blocking is available for SiriusXM Satellite Radio receivers by notifying SiriusXM:

- USA Customers — See www.siriusxm.com or call 1-888-601–6296.
- Canada Customers — See www.siriusxm.ca or call 1-877-438-9677.

It is prohibited to copy, decompile, disassemble, reverse engineer, hack, manipulate, or otherwise make available any technology or software incorporated in receivers compatible with the SiriusXM Satellite Radio System or that support the SiriusXM website, the Online Service or any of its content. Furthermore, the AMBER voice compression software included in this product is protected by

intellectual property rights including patent rights, copyrights, and trade secrets of Digital Voice Systems, Inc.

General Requirements:

1. A License Agreement from SiriusXM is required for any product that incorporates SiriusXM Technology and/or for use of any of the SiriusXM marks to be manufactured, distributed, or marketed in the SiriusXM Service Area.
2. For products to be distributed, marketed, and/or sold in Canada, a separate agreement is required with Canadian Satellite Radio Inc. (operating as SiriusXM Canada).

TouchSense Technology and TouchSense System 1000 Series Licensed from Immersion Corporation. TouchSense System 1000 protected under one or more of the U.S. Patents at the following address www.immersion.com/patent-marking.html and other patents pending.

Bose

Bose AudioPilot and Bose Centerpoint surround are registered trademarks of Bose Corporation in the U.S. and other countries.

HD Radio Technology

HD Radio Technology manufactured under license from iBiquity Digital Corporation. U.S. and Foreign Patents. For patents see http://dts.com/patents. HD Radio and the HD, HD Radio, and “ARC” logos are registered trademarks or trademarks of iBiquity Digital Corporation in the United States and/or other countries.

Bluetooth

The Bluetooth word mark and logos are owned by the Bluetooth SIG, Inc. and any use of such marks by General Motors is under license. Other trademarks and trade names are those of their respective owners.

Java

Java is a registered trademark of Oracle and/or its affiliates.

Schedule I: Gracenote EULA

Music recognition technology and related data are provided by Gracenote. Gracenote is the industry standard in music recognition technology and related content delivery. For more information see www.gracenote.com.

Music-related data from Gracenote, Inc., copyright © 2000 to present Gracenote. Gracenote Software, copyright © 2000 to present Gracenote. One or more patents owned by Gracenote may apply to this product and service. See the Gracenote website for a non-exhaustive list of applicable Gracenote patents. Gracenote, CDDB, MusicID, MediaVOCS, the Gracenote logo and logotype, and the "Powered by Gracenote" logo are either registered trademarks or trademarks of Gracenote in the United States and/or other countries.

Gracenote Terms of Use

This application or device contains software from Gracenote, Inc. of Emeryville, California ("Gracenote"). The software from Gracenote (the "Gracenote Software") enables this application to do disc or file identification and obtain music-related information, including name, artist, track, and title information ("Gracenote Data") from online servers or embedded databases (collectively, "Gracenote Servers") and to perform other functions. You may use Gracenote Data only by means of the intended End-User functions of this application or device.

This application or device may contain content belonging to Gracenote's providers. If so, all of the restrictions set forth herein with respect to Gracenote Data shall also apply to such content and such content providers shall be entitled to all of the benefits and protections set forth herein that are available to Gracenote.

You agree that you will use Gracenote Data, the Gracenote Software, and Gracenote Servers for your own personal non-commercial use only. You agree not to assign, copy, transfer or transmit the Gracenote Software or any Gracenote Data to any third party. YOU AGREE NOT TO USE OR EXPLOIT GRACENOTE DATA, THE GRACENOTE SOFTWARE, OR GRACENOTE SERVERS, EXCEPT AS EXPRESSLY PERMITTED HEREIN.

You agree that your non-exclusive license to use the Gracenote Data, the Gracenote Software, and Gracenote Servers will terminate if you violate these restrictions. If your license terminates, you agree to cease any and all use of the Gracenote Data, the Gracenote Software, and Gracenote Servers. Gracenote reserves all rights in Gracenote Data, the Gracenote Software, and the Gracenote Servers, including all ownership rights. Under no circumstances will Gracenote become liable for any payment to you for any information that you provide. You agree that Gracenote may enforce its rights under this Agreement against you directly in its own name.

The Gracenote service uses a unique identifier to track queries for statistical purposes. The purpose of a randomly assigned numeric identifier is to allow the Gracenote service to count queries without knowing anything about who you are. For more information, see the web page for the Gracenote Privacy Policy for the Gracenote service.

The Gracenote Software and each item of Gracenote Data are licensed to you "AS IS." Gracenote makes no representations or warranties, express

or implied, regarding the accuracy of any Gracenote Data. Gracenote reserves the right to delete data from the Gracenote Servers or to change data categories for any cause that Gracenote deems sufficient. No warranty is made that the Gracenote Software or Gracenote Servers are error-free or that functioning of Gracenote Software or Gracenote Servers will be uninterrupted. Gracenote is not obligated to provide you with new enhanced or additional data types or categories that Gracenote may provide in the future and is free to discontinue its services at any time.

GRACENOTE DISCLAIMS ALL WARRANTIES EXPRESS OR IMPLIED, INCLUDING, BUT NOT LIMITED TO, IMPLIED WARRANTIES OF MERCHANTABILITY, FITNESS FOR A PARTICULAR PURPOSE, TITLE, AND NON-INFRINGEMENT. GRACENOTE DOES NOT WARRANT THE RESULTS THAT WILL BE OBTAINED BY YOUR USE OF THE GRACENOTE SOFTWARE OR ANY GRACENOTE SERVER. IN NO CASE WILL GRACENOTE BE LIABLE FOR ANY CONSEQUENTIAL OR INCIDENTAL DAMAGES OR FOR ANY LOST PROFITS OR LOST REVENUES.

© 2014. Gracenote, Inc. All Rights Reserved.

MPEG4–AVC (H.264)

THIS PRODUCT IS LICENSED UNDER THE AVC PATENT PORTFOLIO LICENSE FOR THE PERSONAL AND NON-COMMERCIAL USE OF A CONSUMER TO (i) ENCODE VIDEO IN COMPLIANCE WITH THE AVC STANDARD (“AVC VIDEO”) AND/OR (ii) DECODE AVC VIDEO THAT WAS ENCODED BY A CONSUMER ENGAGED IN A PERSONAL AND NON-COMMERCIAL ACTIVITY AND/OR WAS OBTAINED FROM A VIDEO PROVIDER LICENSED TO PROVIDE AVC VIDEO. NO LICENSE IS GRANTED OR SHALL BE IMPLIED FOR ANY OTHER USE. ADDITIONAL INFORMATION MAY BE OBTAINED FROM MPEG LA, LLC. SEE HTTP://WWW.MPEGLA.COM.

VC-1

THIS PRODUCT IS LICENSED UNDER THE VC-1 PATENT PORTFOLIO LICENSE FOR THE PERSONAL AND NON-COMMERCIAL USE OF A CONSUMER TO (i) ENCODE VIDEO IN COMPLIANCE WITH THE VC-1 STANDARD (“VC-1 VIDEO”) AND/OR (ii) DECODE VC-1 VIDEO THAT WAS ENCODED BY A CONSUMER ENGAGED IN A PERSONAL AND NON-COMMERCIAL ACTIVITY AND/OR WAS OBTAINED FROM A VIDEO PROVIDER LICENSED TO PROVIDE VC-1 VIDEO. NO LICENSE IS GRANTED OR SHALL BE IMPLIED FOR ANY OTHER USE. ADDITIONAL INFORMATION MAY BE OBTAINED FROM MPEG LA, LLC. SEE HTTP://WWW.MPEGLA.COM.

MPEG4–Visual

USE OF THIS PRODUCT IN ANY MANNER THAT COMPLIES WITH THE MPEG-4 VISUAL STANDARD IS PROHIBITED, EXCEPT FOR USE BY A CONSUMER ENGAGING IN PERSONAL AND NON-COMMERCIAL ACTIVITIES.

MP3

MPEG Layer-3 audio coding technology licensed from Fraunhofer IIS and Thomson.

WMV/WMA

This product includes technology owned by Microsoft Corporation and under a license from Microsoft Licensing, GP. Use or distribution of such technology outside of this product is prohibited without a license from Microsoft Corporation and/or Microsoft Licensing, GP as applicable.

Map End User License Agreement

END USER TERMS

The Map Data SD card ("Data") is provided for your personal, internal use only and not for resale. It is protected by copyright, and is subject to the following terms (this "End User License Agreement") and conditions which are agreed to by you, on the one hand, and HERE North America, LLC ("HERE") and its licensors (including their licensors and suppliers) on the other hand.

The Data for areas of Canada includes information taken with permission from Canadian authorities, including: © Her Majesty the Queen in Right of Canada, © Queen's Printer for Ontario, © Canada Post Corporation, GeoBase®.

HERE holds a nonexclusive license from the United States Postal Service® to publish and sell ZIP+4® information.

© United States Postal Service 2013. Prices are not established, controlled, or approved by the United States Postal Service. The following trademarks and registrations are owned by the USPS: United States Postal Service, USPS, and ZIP+4.

TERMS AND CONDITIONS

Personal Use Only: You agree to use this Data for the solely personal, noncommercial purposes for which you were licensed, and not for service bureau, timesharing or other similar purposes. Except as otherwise set forth herein, you agree not to otherwise reproduce, copy, modify, decompile, disassemble or reverse engineer any portion of this Data, and may not transfer or distribute it in any form, for any purpose, except to the extent permitted by mandatory laws. You may transfer the Data and all accompanying materials on a permanent basis if you retain no copies and the recipient agrees to the terms of this End User License Agreement. Multi-disc sets may only be transferred or sold as a complete set as provided to you and not as a subset thereof.

Restrictions

Except where you have been specifically licensed to do so by HERE and without limiting the preceding paragraph, you may not (a) use this Data with any products, systems, or applications installed or otherwise connected to or in communication with vehicles capable of vehicle navigation, positioning, dispatch, real time route guidance, fleet management or similar applications; or (b) with, or in communication with, including without limitation, cellular phones, palmtop and handheld computers, pagers, and personal digital assistants or PDAs.

Warning

This Data may contain inaccurate or incomplete information due to the passage of time, changing circumstances, sources used, and the nature of collecting comprehensive geographic data, any of which may lead to incorrect results.

No Warranty

This Data is provided to you "as is," and you agree to use it at your own risk. HERE and its licensors (and their licensors and suppliers) make no guarantees, representations, or warranties of any kind, express or implied, arising by law or otherwise, including but not limited to, content, quality, accuracy, completeness, effectiveness, reliability, fitness for a particular purpose, usefulness, use or results to be obtained from this Data, or that the Data or server will be uninterrupted or error free.

Disclaimer of Warranty

THE DATABASE IS PROVIDED ON AN "AS IS" AND "WITH ALL FAULTS BASIS" AND HARMAN (AND THEIR LICENSORS AND SUPPLIERS) EXPRESSLY DISCLAIM ALL OTHER WARRANTIES, EXPRESS OR IMPLIED, INCLUDING BUT NOT LIMITED TO, THE IMPLIED WARRANTIES OF NON-INFRINGEMENT, MERCHANTABILITY, SATISFACTORY QUALITY, ACCURACY, TITLE AND FITNESS FOR A PARTICULAR PURPOSE. NO ORAL OR WRITTEN ADVICE OR INFORMATION PROVIDED BY HARMAN (OR ANY OF THEIR LICENSORS, AGENTS, EMPLOYEES, OR THIRD PARTY PROVIDERS) SHALL CREATE A WARRANTY, AND YOU ARE NOT ENTITLED TO RELY ON ANY SUCH ADVICE OR INFORMATION. THIS DISCLAIMER OF WARRANTIES IS AN ESSENTIAL CONDITION OF THIS AGREEMENT.

Disclaimer of Liability

HERE AND ITS LICENSORS (INCLUDING THEIR LICENSORS AND SUPPLIERS) SHALL NOT BE LIABLE TO YOU IN RESPECT OF ANY CLAIM, DEMAND OR ACTION, IRRESPECTIVE OF THE NATURE OF THE CAUSE OF THE CLAIM, DEMAND OR ACTION ALLEGING ANY LOSS, INJURY OR DAMAGES, DIRECT OR INDIRECT, WHICH MAY RESULT FROM THE USE OR POSSESSION OF THIS DATA; OR FOR ANY LOSS OF PROFIT, REVENUE, CONTRACTS OR SAVINGS, OR ANY OTHER DIRECT, INDIRECT, INCIDENTAL, SPECIAL OR CONSEQUENTIAL DAMAGES ARISING OUT OF YOUR USE OF OR INABILITY TO USE THIS DATA, ANY DEFECT IN THIS DATA, OR THE BREACH OF THESE TERMS OR CONDITIONS, WHETHER IN AN ACTION IN CONTRACT OR TORT OR BASED ON A WARRANTY, EVEN IF HERE OR ITS LICENSORS HAVE BEEN ADVISED OF THE POSSIBILITY OF SUCH DAMAGES. Some States, Territories, and Countries do not allow certain liability exclusions or damages limitations, so to that extent the above may not apply to you.

Export Control

You agree not to export from anywhere any part of the Data provided to you or any direct product thereof except in compliance with, and with all licenses and approvals required under, applicable export laws,

rules and regulations. Entire Agreement: These terms and conditions constitute the entire agreement between HERE (and its licensors, including their licensors and suppliers) and you pertaining to the subject matter hereof, and supersedes in their entirety any and all written or oral agreements previously existing between us with respect to such subject matter.

Governing Law

The above terms and conditions shall be governed by the laws of the State of Illinois, without giving effect to (i) its conflict of laws provisions, or (ii) the United Nations Convention for Contracts for the International Sale of Goods, which is explicitly excluded. You agree to submit to the jurisdiction of the State of Illinois for any and all disputes, claims, and actions arising from or in connection with the Data provided to you hereunder.

Government End Users

If the Data is being acquired by or on behalf of the United States government or any other entity seeking or applying rights similar to those customarily claimed by the United States government, this Data is a “commercial item” as that term is defined at 48 C.F.R. (“FAR”) 2.101, is licensed in accordance with this End User License Agreement, and each copy of Data delivered or otherwise furnished shall be marked and embedded as appropriate with the following “Notice of Use,” and be treated in accordance with such Notice:

here

Maps for Life

NOTICE OF USE

CONTRACTOR (MANUFACTURER/ SUPPLIER)

NAME:

HERE North America, LLC

CONTRACTOR (MANUFACTURER/ SUPPLIER)

ADDRESS:

425 West Randolph Street, Chicago, IL 60606.

This Data is a commercial item as defined in FAR 2.101 and is subject to the End User License Agreement under which this Data was provided.

© 2014 HERE North America, LLC. All rights reserved.

If the Contracting Officer, federal government agency, or any federal official refuses to use the legend provided herein, the Contracting Officer, federal government agency, or any federal official must notify HERE prior to seeking additional or alternative rights in the Data.

Unicode

Copyright © 1991-2010 Unicode, Inc. All rights reserved. Distributed under the Terms of Use in http://www.unicode.org/copyright.html.

Free Type Project

Portions of this software are copyright © 2010 The FreeType Project (http://www.freetype.org). All rights reserved.

Open Source SW

Further information concerning the OSS licenses is shown in the infotainment display.

QNX

Portions of this software are copyright © 2008-2011, QNX Software Systems. All rights reserved.

Part C – EULA

Copyright © 2011, Software Systems GmbH & Co. KG. All Rights Reserved.

The product you have purchased ("Product") contains Software (Runtime Configuration No. 505962; "Software") which is distributed by or on behalf of the Product manufacturer "Manufacturer") under license from Software Systems Co. ("QSSC"). You may only use the Software in the Product and in compliance with the license terms below.

Subject to the terms and conditions of this License, QSSC hereby grants you a limited, non-exclusive, non-transferable license to use the Software in the Product for the purpose intended by the Manufacturer. If permitted by the Manufacturer, or by applicable law, you may make one backup copy of the Software as part of the Product software. QSSC and its licensors reserve all license+C31 rights not expressly granted herein, and retain all right, title and interest in and to all copies of the Software, including all intellectual property rights therein. Unless required by applicable law you may not reproduce, distribute or transfer, or de-compile, disassemble or otherwise attempt to unbundle, reverse engineer, modify or create derivative works of, the Software. You agree: (1) not to remove, cover or alter any proprietary notices, labels or marks in or on the Software, and to ensure that all copies bear any notice contained on the original; and (2) not to export the Product or the Software in contravention of applicable export control laws.

EXCEPT TO THE EXTENT OTHERWISE REQUIRED BY APPLICABLE LAW, QSSC AND ITS LICENSORS PROVIDE THE SOFTWARE ON AN "AS IS" BASIS, WITHOUT WARRANTIES OR CONDITIONS OF ANY KIND, EITHER EXPRESS OR IMPLIED INCLUDING, WITHOUT LIMITATION, ANY WARRANTIES OR CONDITIONS OF TITLE, NON-INFRINGEMENT, MERCHANTABILITY OR FITNESS FOR A PARTICULAR PURPOSE. ANY WARRANTIES OR OTHER PROVISIONS OFFERED BY THE MANUFACTURER OR ITS DISTRIBUTOR(S) THAT DIFFER FROM THIS LICENSE ARE OFFERED BY THE MANUFACTURER OR ITS DISTRIBUTOR(S) ALONE AND NOT BY QSSC, ITS AFFILIATES OR THEIR LICENSORS. YOU ASSUME ANY

RISKS ASSOCIATED WITH YOUR USE OF THE SOFTWARE UNDER THIS LICENSE.

EXCEPT TO THE EXTENT OTHERWISE REQUIRED BY APPLICABLE LAW (SUCH AS IN THE CASE OF DELIBERATE OR GROSSLY NEGLIGENT ACTS), IN NO EVENT SHALL QSSC, ITS AFFILIATES OR THEIR LICENSORS BE LIABLE TO YOU UNDER ANY LEGAL THEORY, WHETHER IN TORT (INCLUDING NEGLIGENCE), CONTRACT OR OTHERWISE, FOR DAMAGES, INCLUDING ANY DIRECT, INDIRECT, SPECIAL, INCIDENTAL, OR CONSEQUENTIAL DAMAGES OF ANY CHARACTER ARISING AS A RESULT OF THIS LICENSE OR OUT OF THE USE OR INABILITY TO USE THE PRODUCT (INCLUDING BUT NOT LIMITED TO DAMAGES FOR LOSS OF GOODWILL, WORK STOPPAGE, PRODUCT FAILURE OR MALFUNCTION, OR ANY AND ALL OTHER COMMERCIAL DAMAGES OR LOSSES), EVEN IF QSSC, ITS AFFILIATES OR THEIR LICENSORS HAVE BEEN ADVISED OF THE POSSIBILITY OF SUCH DAMAGES.

WMA

This product is protected by certain intellectual property rights of Microsoft. Use or distribution of such technology outside of this product is prohibited without a license from Microsoft.

For more information on the Software, including any open source software license terms (and available source code) as well as copyright attributions applicable to the Runtime Configuration indicated above, please contact the Manufacturer or contact QSSC at 175 Terence Matthews Crescent, Kanata, Ontario, Canada K2M 1W8 (licensing@qnx.com).

Linotype

Helvetica is a trademark of Linotype Corp. registered in the U.S. Patent and Trademark Office and may be registered in certain other jurisdictions in the name of Linotype Corp. or its licensee Linotype GmbH.

Usage in text form of each of the Licensed Trademarks is:

The trademark attribution requirements for the Licensed Trademarks may be viewed at http://www.linotype.com/2061-19414/trademarks.html.

END USER NOTICE

The marks of companies displayed by this product to indicate business locations are the marks of their respective owners. The use of such marks in this product does not imply any sponsorship, approval, or endorsement by such companies of this product.

Climate Controls

Climate Control Systems
Dual Automatic Climate Control System 196

Air Vents
Air Vents 200

Maintenance
Passenger Compartment Air Filter 201
Service 201

Climate Control Systems

Dual Automatic Climate Control System

The climate control buttons on the center stack and on the climate control display are used to adjust the heating, cooling, and ventilation system.

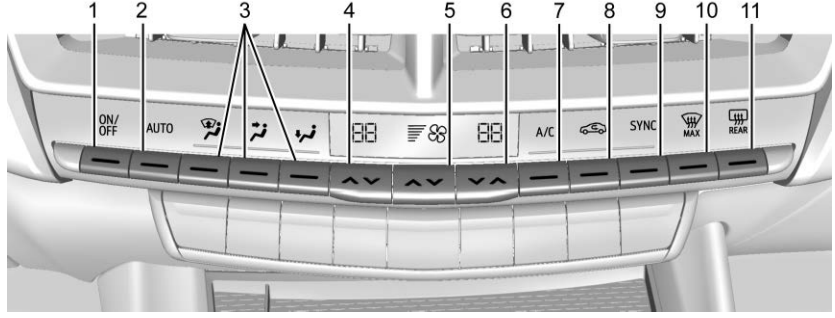

Center Stack Climate Controls

1. ON/OFF (Power)
2. AUTO (Automatic Operation)
3. Air Delivery Mode Control
4. Driver Temperature Controls
5. Fan Control
6. Passenger Temperature Controls
7. A/C (Air Conditioning)
8. Recirculation
9. SYNC (Synchronized Temperature)
10. Defrost
11. Rear Window Defogger

Climate Control Display

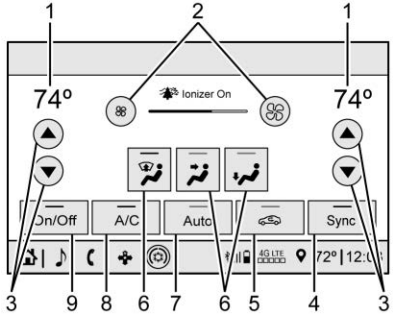

1. Driver and Passenger Temperature Displays
2. Fan Control
3. Driver and Passenger Temperature Controls
4. Sync (Synchronized Temperature)
5. Recirculation
6. Air Delivery Mode Control
7. Auto (Automatic Operation)
8. A/C (Air Conditioning)
9. On/Off (Power)

The fan speed, air delivery mode, air conditioning, driver and passenger temperatures, recirculation, and Sync settings can be controlled by touching CLIMATE icon on the infotainment Home Page or the climate button in the application tray. A selection can then be made on the front climate control page displayed. See the infotainment manual.

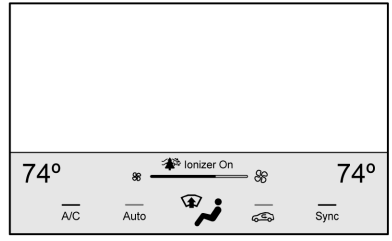

Climate Control Status Display

The climate control status display appears briefly when the center stack climate controls are adjusted.

Climate Control Influence on Fuel Economy

The climate control system depends on other vehicle systems for heat and power input. Certain climate control settings can lead to higher fuel usage.

The following climate control settings use more fuel:

- MAX air conditioning mode
- Defrost mode
- Extreme temperature settings, such as 15° C (60° F) or 32° C (90° F)
- High fan speed settings

To help reduce fuel usage:

- Use the full automatic control as described under “Automatic Operation.”
- Select a temperature setting that is higher in hot weather and lower in cold weather.
- Turn off the air conditioning when it is not needed.
- Only use defrost to clear the windows.

Automatic Operation

The system automatically controls the following four functions to heat or cool the vehicle to the desired temperature:

- Fan Speed
- Air Delivery Mode
- Air Conditioning
- Recirculation

When the AUTO indicator light is lit, all four functions are operating automatically. Each function can be manually set and the selected setting will be shown. This cancels full automatic operation and the AUTO indicator light turns off. Functions that are not manually set will continue to be automatically controlled, although the AUTO indicator light will not be lit.

To place the system in automatic mode:

1. Press AUTO.
2. Set the driver and passenger temperature.

   To find your comfort setting, start with 22 °C (72 °F) and allow the system time to stabilize. Then adjust the temperature as needed for best comfort.

To improve fuel efficiency and to cool the vehicle faster, recirculation may be automatically selected in warm weather.

The recirculation light will not come on when automatically controlled. Press to manually select recirculation; press it again to select outside air.

Do not cover the solar sensor on the top of the instrument panel near the windshield. This sensor regulates air temperature based on sun load. See “Sensors” later in this section.

Manual Operation

On/Off : Press to turn the climate control system on or off. When the system is off, outside air will be prevented from entering the vehicle. When the system is on or a button is pressed, the climate control system will turn on and deliver airflow per the current setting.

: Press button up or down to increase or decrease the fan speed.

Press AUTO to return to automatic operation.

Driver and Passenger Temperature Control : The temperature can be adjusted separately for the driver and passenger.

Press button up or down to increase or decrease the driver or passenger temperature setting.

The driver side or passenger side temperature display shows the temperature setting increasing or decreasing.

SYNC : Press to link the passenger and rear climate temperature settings, if equipped, to the driver setting. The SYNC indicator light will turn on. When the passenger or rear climate temperature settings are adjusted, the SYNC indicator light is off.

Air Delivery Mode Control : Press , , or to change the direction of the airflow. An indicator light comes

on in the selected mode button. Multiple buttons can be selected simultaneously.

Changing the mode cancels the automatic operation and the system goes into manual mode. Press AUTO to return to automatic operation.

: This mode clears the windows of fog or moisture. Air is directed to the windshield and side window vents. The system automatically forces outside air into the vehicle and the air conditioning compressor will run, unless the outside temperature is close to freezing.

: Air is directed to the instrument panel outlets.

: Air is directed to the floor outlets, with some to the windshield, side window outlets, outboard panel outlets, and second row floor outlets.

: Press to clear the windshield of fog or frost more quickly. Air is directed to the windshield and the side window outlets. The air conditioning compressor also comes on, unless the outside temperature is below freezing.

Do not drive the vehicle until all windows are clear.

See *Air Vents ⇨ 200*.

A/C : Press to turn the air conditioning system on or off. An indicator light comes on to show that the air conditioning is enabled. If the fan is turned off, the air conditioner will not run. The A/C light will stay on even if the outside temperatures are below freezing.

: Press to turn on recirculation. An indicator light comes on. Air is recirculated to quickly cool the inside of the vehicle. It can also be used to help reduce outside air and odors that enter the vehicle. The air conditioning compressor also comes on when this mode is activated.

Rear Window Defogger

The rear window defogger uses a warming grid to remove fog from the rear window.

REAR : Press to turn the rear window defogger on or off. An indicator light on the button comes on to show that the rear window defogger is on.

The rear window defogger only works when the ignition is on. The defogger turns off if the ignition is turned to off or ACC/ACCESSORY.

Caution

Using a razor blade or sharp object to clear the inside rear window can damage the rear window defogger. Repairs would not be covered by the vehicle warranty. Do not clear the inside rear window with sharp objects.

Heated Mirror : If equipped with heated outside mirrors, the mirrors heat to help clear fog or frost from the surface of the mirror when the rear window defog button is pressed. See *Heated Mirrors ⇨ 25*.

Remote Start Climate Control Operation : If equipped with remote start, the climate control system may run when the vehicle is started remotely. The rear defog may come on

during remote start based on cold ambient conditions. The rear defog indicator light does not come on during a remote start.

If equipped, the heated seats will turn on if it is cold outside or the ventilated seats will turn on if it is hot outside. The heated and ventilated seat indicator lights may not come on during a remote start. If equipped, the heated steering wheel will come on in a remote start if it is cold outside. The heated steering wheel indicator light may not come on.

Ionizer : If equipped with an ionizer, this feature helps to clean the air inside the vehicle and remove contaminants such as pollen, odors, and dust. If the climate control system is on and the ionizer is enabled, the ionizer status indicator will be lit on the climate control display. To turn the ionizer on or off, see Climate and Air Quality under *Vehicle Personalization* ⇨ *117*.

Sensors

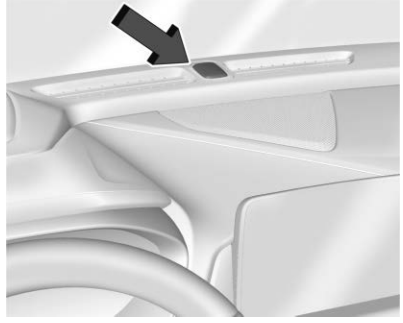

The solar sensor, located in the defrost grille in the middle of the instrument panel, monitors the solar heat. Do not cover the solar sensor or the system will not work properly.

There is also an exterior temperature sensor behind the front grille. This sensor reads the outside air temperature and helps maintain the temperature inside the vehicle. Any cover on the front of the vehicle, could cause a false reading in the displayed temperature.

The climate control system uses the information from these sensors to maintain comfort settings by adjusting the outlet temperature, fan speed, and air delivery mode. The system may also supply cooler air to the side of the vehicle facing the sun. The recirculation mode will also be used as needed to maintain cool outlet temperatures.

Air Vents

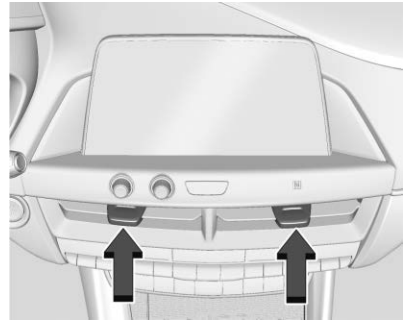

Adjustable air vents are in the center and on the sides of the instrument panel, and on the rear of the center console storage.

Move the slider knobs to change the direction of or to close off the airflow.

Operation Tips

- Clear away any ice, snow, or leaves from air inlets at the base of the windshield that could block the flow of air into the vehicle.
- Clear snow off the hood to improve visibility and help decrease moisture drawn into the vehicle.
- Keep the path under the front seats clear of objects to help circulate the air inside of the vehicle more effectively.
- Use of non-GM approved hood deflectors can adversely affect the performance of the system. Check with your dealer before adding equipment to the outside of the vehicle.
- Do not attach any devices to the air vent slats. This restricts airflow and may cause damage to the air vents.

Maintenance

Passenger Compartment Air Filter

The filter reduces dust, pollen, and other airborne irritants from outside air that is pulled into the vehicle. The filter should be replaced as part of routine scheduled maintenance. See *Maintenance Schedule* ⇨ *380*.

See your dealer regarding replacement of the filter.

Service

All vehicles have a label underhood that identifies the refrigerant used in the vehicle. The refrigerant system should only be serviced by trained and certified technicians. The air conditioning evaporator should never be repaired or replaced by one from a salvage vehicle. It should only be replaced by a new evaporator to ensure proper and safe operation.

During service, all refrigerants should be reclaimed with proper equipment. Venting refrigerants directly to the atmosphere is harmful to the environment and may also create unsafe conditions based on inhalation, combustion, frostbite, or other health-based concerns.

The air conditioning system requires periodic maintenance. See *Maintenance Schedule* ⇨ *380*.

Driving and Operating

Driving Information

Driving for Better Fuel Economy 203
Distracted Driving 203
Defensive Driving 204
Impaired Driving 204
Control of a Vehicle 204
Braking 204
Steering 205
Off-Road Recovery 206
Loss of Control 206
Track Events and Competitive Driving (V-Series Only) 207
Driving on Wet Roads 211
Hill and Mountain Roads 212
Winter Driving 213
If the Vehicle Is Stuck 214
Vehicle Load Limits 214

Starting and Operating

New Vehicle Break-In 218
Composite Materials 218
Ignition Positions 219
Starting the Engine 220
Stop/Start System 221
Engine Heater 222
Retained Accessory Power (RAP) 223
Shifting Into Park (Mechanical Shifter) 223
Shifting Into Park (Electronic Shifter) 224
Shifting out of Park (Mechanical Shifter) 225
Shifting out of Park (Electronic Shifter) 225
Parking over Things That Burn 226
Extended Parking 226

Engine Exhaust

Engine Exhaust 226
Running the Vehicle While Parked 227

Automatic Transmission

Automatic Transmission (Mechanical Shifter) 227
Automatic Transmission (Electronic Shifter) 229
Manual Mode (Mechanical Shifter) 234
Manual Mode (Electronic Shifter) 235

Drive Systems

All-Wheel Drive 236

Brakes

Electric Brake Boost 236
Antilock Brake System (ABS) 236
Electric Parking Brake 237
Brake Assist 238
Hill Start Assist (HSA) 238
Automatic Vehicle Hold (AVH) 239

Ride Control Systems

Traction Control/Electronic Stability Control 239
Driver Mode Control 241
Competitive Driving Mode 246
Limited-Slip Differential 248

Cruise Control

Cruise Control 248
Adaptive Cruise Control (Advanced) 251
Super Cruise 260

Driver Assistance Systems

Driver Assistance Systems 275
Assistance Systems for Parking or Backing 277
Rear Pedestrian Alert 282
Assistance Systems for Driving 283
Forward Collision Alert (FCA) System 283

Automatic Emergency Braking (AEB) 285
Front Pedestrian Braking (FPB) System 287
Side Blind Zone Alert (SBZA) 289
Lane Change Alert (LCA) 289
Lane Keep Assist (LKA) 291

Fuel

Top Tier Fuel 293
Recommended Fuel (LSY 2.0L L4 Turbo Engine) 293
Recommended Fuel (L3B 2.7L L4 Turbo Engine) 294
Prohibited Fuels 294
Fuels in Foreign Countries 294
Fuel Additives 294
Filling the Tank 295
Filling a Portable Fuel Container 296

Trailer Towing

General Towing Information 297
Driving Characteristics and Towing Tips 297
Trailer Towing (LSY 2.0L L4 Engine) 300
Towing Equipment 302

Conversions and Add-Ons

Add-On Electrical Equipment ... 303

Driving Information

Driving for Better Fuel Economy

Driving habits can affect fuel mileage. Here are some driving tips to get the best fuel economy possible:

- Set the climate controls to the desired temperature after the engine is started, or turn them off when not required.
- Avoid fast starts and accelerate smoothly.
- Brake gradually and avoid abrupt stops.
- Avoid idling the engine for long periods of time.
- When road and weather conditions are appropriate, use cruise control.
- Always follow posted speed limits or drive more slowly when conditions require.
- Keep vehicle tires properly inflated.
- Combine several trips into a single trip.
- Replace the vehicle's tires with the same TPC Spec number molded into the tire's sidewall near the size.
- Follow recommended scheduled maintenance.

Distracted Driving

Distraction comes in many forms and can take your focus from the task of driving. Exercise good judgment and do not let other activities divert your attention away from the road. Many local governments have enacted laws regarding driver distraction. Become familiar with the local laws in your area.

To avoid distracted driving, keep your eyes on the road, keep your hands on the steering wheel, and focus your attention on driving.

- Do not use a phone in demanding driving situations. Use a hands-free method to place or receive necessary phone calls.
- Watch the road. Do not read, take notes, or look up information on phones or other electronic devices.
- Designate a front seat passenger to handle potential distractions.

- Become familiar with vehicle features before driving, such as programming favorite radio stations and adjusting climate control and seat settings. Program all trip information into any navigation device prior to driving.
- Wait until the vehicle is parked to retrieve items that have fallen to the floor.
- Stop or park the vehicle to tend to children.
- Keep pets in an appropriate carrier or restraint.
- Avoid stressful conversations while driving, whether with a passenger or on a cell phone.

⚠ Warning

Taking your eyes off the road too long or too often could cause a crash resulting in injury or death. Focus your attention on driving.

Refer to the infotainment section for more information on using that system and the navigation system, if equipped, including pairing and using a cell phone.

Defensive Driving

Defensive driving means "always expect the unexpected." The first step in driving defensively is to wear the seat belt. See *Seat Belts* ⇨ *40*.

- Assume that other road users (pedestrians, bicyclists, and other drivers) are going to be careless and make mistakes. Anticipate what they may do and be ready.
- Allow enough following distance between you and the driver in front of you.
- Focus on the task of driving.

Impaired Driving

Death and injury associated with impaired driving is a global tragedy.

⚠ Warning

Drinking alcohol or taking drugs and then driving is very dangerous. Your reflexes, perceptions, attentiveness, and judgment can be affected by even a small amount of alcohol or drugs. You can have a

(Continued)

Warning (Continued)

serious — or even fatal — collision if you drive after drinking or taking drugs.

Do not drive while under the influence of alcohol or drugs, or ride with a driver who has been drinking or is impaired by drugs. Find alternate transportation home; or if you are with a group, designate a driver who will remain sober.

Control of a Vehicle

Braking, steering, and accelerating are important factors in helping to control a vehicle while driving.

Braking

Braking action involves perception time and reaction time. Deciding to push the brake pedal is perception time. Actually doing it is reaction time.

Average driver reaction time is about three-quarters of a second. In that time, a vehicle moving at 100 km/h

(60 mph) travels 20 m (66 ft), which could be a lot of distance in an emergency.

Helpful braking tips to keep in mind include:

- Keep enough distance between you and the vehicle in front of you.
- Avoid needless heavy braking.
- Keep pace with traffic.

If the engine ever stops or a brake fault occurs, the brakes may lose power assist. More effort will be required to stop the vehicle and it can take longer to stop.

Steering

Caution

To avoid damage to the steering system, do not drive over curbs, parking barriers, or similar objects at speeds greater than 3 km/h (1 mph). Use care when driving over other objects such as lane dividers and speed bumps. Damage caused by misuse of the vehicle is not covered by the vehicle warranty.

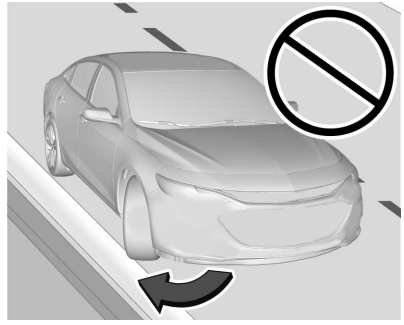

Electric Power Steering

The vehicle has electric power steering. It does not have power steering fluid. Regular maintenance is not required.

If power steering assist is lost due to a system malfunction, the vehicle can be steered, but may require increased effort.

If the steering assist is used for an extended period of time while the vehicle is not moving, power assist may be reduced.

If the steering wheel is turned until it reaches the end of its travel and is held against that position for an extended period of time, power steering assist may be reduced.

Normal use of the power steering assist should return when the system cools down.

See your dealer if there is a problem.

Curve Tips

- Take curves at a reasonable speed.
- Reduce speed before entering a curve.
- Maintain a reasonable steady speed through the curve.
- Wait until the vehicle is out of the curve before accelerating gently into the straightaway.

Steering in Emergencies

- There are some situations when steering around a problem may be more effective than braking.
- Holding both sides of the steering wheel allows you to turn 180 degrees without removing a hand.

- The Antilock Brake System (ABS) allows steering while braking.

Off-Road Recovery

The vehicle's right wheels can drop off the edge of a road onto the shoulder while driving. Follow these tips:

1. Ease off the accelerator and then, if there is nothing in the way, steer the vehicle so that it straddles the edge of the pavement.
2. Turn the steering wheel about one-eighth of a turn, until the right front tire contacts the pavement edge.
3. Turn the steering wheel to go straight down the roadway.

Loss of Control

Skidding

There are three types of skids that correspond to the vehicle's three control systems:

- Braking Skid — wheels are not rolling.
- Steering or Cornering Skid — too much speed or steering in a curve causes tires to slip and lose cornering force.
- Acceleration Skid — too much throttle causes the driving wheels to spin.

Defensive drivers avoid most skids by taking reasonable care suited to existing conditions, and by not overdriving those conditions. But skids are always possible.

If the vehicle starts to slide, follow these suggestions:

- Ease your foot off the accelerator pedal and steer the way you want the vehicle to go. The vehicle may straighten out. Be ready for a second skid if it occurs.
- Slow down and adjust your driving according to weather conditions. Stopping distance can be longer and vehicle control can be affected when traction is reduced by water, snow, ice, gravel, or other material on the road. Learn to recognize warning clues — such as enough water, ice, or packed snow on the road to make a mirrored surface — and slow down when you have any doubt.
- Try to avoid sudden steering, acceleration, or braking, including reducing vehicle speed by shifting to a lower gear. Any sudden changes could cause the tires to slide.

Remember: Antilock brakes help avoid only the braking skid.

Track Events and Competitive Driving (V-Series Only)

⚠ Danger

High-performance features are intended for use only on closed tracks by experienced and qualified drivers and should not be used on public roads. High-speed driving, aggressive cornering, hard braking, and other high-performance driving can be dangerous. Improper driver inputs for the conditions may result in loss of control of the vehicle, which could injure or kill you or others. Always drive safely.

Track events and competitive driving may affect the vehicle warranty. See the warranty manual before using the vehicle for competitive driving.

⚠ Warning

Prior to each track event and again before returning to public roads, tighten the wheel nuts with a torque wrench to the proper torque specification. Wheel nuts that are improperly or incorrectly tightened can cause the wheels to become loose or come off, resulting in a crash. See *Capacities and Specifications* ⇨ *396* for wheel nut torque specifications.

Caution

Low oil levels can damage the engine. If using the vehicle for competitive driving, the engine may use more oil than it would with normal use. Check the oil level often during competitive driving.

Competitive Driving Mode can be selected. See *Driver Mode Control* ⇨ *241*.

Axle Fluid

Axles must have 2400 km (1500 mi) before being used in track driving.

The rear axle fluid temperatures may be higher than when driving in severe conditions. Drain and refill with new fluid after the first racing or competitive driving event, and then after every 24 hours of racing or competitive driving. See *Recommended Fluids and Lubricants* ⇨ *391*.

Caution

During a first time track or racing event, high axle temperatures can occur. Damage could be caused to the axle and would not be covered by the vehicle warranty. Do not drive as long or as fast the first time the vehicle is driven on the track or raced.

- The axle lubricant should be replaced with new lubricant.
- Additional cooling capacity is also required for continuous competitive driving.

Engine Oil

Check the oil level often during track events and competitive driving and keep the oil level at or near the upper mark.

Fuel

Use premium unleaded gasoline with a posted octane rating of 93 at a track event. Unleaded gasoline with a posted octane rating of 91 may be used, but performance will be degraded.

Automatic Transmission Fluid

Have the transmission fluid set to the track specific oil level prior to track usage. Transmission fluid should be changed after every 15 hours of track usage. Any transmission level set or change should be performed at your dealer.

Brakes

Brake cooling can be improved if the front brake disc splash shield and front tire deflector are removed. Removing the shield will require that the suspension bushings and wheel speed wires visible to the brake disc be protected with insulated thermal wrapping.

Caution

Removing the splash shield can degrade wet braking performance, as well as introduce brake pedal pulsation, due to brake disc exposure to road debris. Only remove the front brake disc splash shield and front tire deflector when driving in track events.

Brake Pad Wear Sensors (V-Series Only)

If equipped, the brake pad wear sensors need to be removed from the brake calipers prior to any track or racing event. The original sensors can be reinstalled if significant brake pad wear is not observed. The sensor should not extend beyond the brake pad surface at the rotor contact.
If this condition is observed, the brake pad life system needs to be disabled until a new set of brake pads and sensors are installed and the system reset.

Brake Fluid

- Before racing, replace existing brake fluid with a qualified racing brake fluid from a sealed container. Brake fluid with a dry boiling point >279 °C (534 °F) is qualified.
  If racing brake fluid is used, replace it with GM approved brake fluid before driving on public roads. See *Recommended Fluids and Lubricants* ⇨ *391*.
- Do not use silicone-based fluids.

If racing brake fluid is in the vehicle and the age of the brake fluid is over a month old or unknown, replace the brake fluid between racing/closed track driving.

Caution

Failure to change the brake fluid and transfer case fluid after any performance or race track driving could result in damage not covered by the vehicle warranty. Have the brake fluid and transfer case fluid changed by your dealer after any

(Continued)

Caution (Continued)

performance or race track driving. See *Recommended Fluids and Lubricants* ⇨ *391*.

Brake Fade Warning Assist

The Brake Fade Warning Assist system monitors the performance of the brake system. If the system detects brake fade, or if the brake fluid is near the boiling point, the driver will be alerted.

The Brake Fade Warning Assist system is designed for use with the factory-installed brake pads or GM-approved replacement pads. If the brake pads on the vehicle need to be replaced, use GM-approved brake pads. If this is not done, the brake fade warning system may not function properly.

Stage 1 : The Driver Information Center (DIC) displays a “Reduce Braking to Avoid Overheating” message and brake pedal effort and travel is increased. When the message displays, the driver should decrease brake pedal pressure.

Stage 2 : The Driver Information Center (DIC) displays a “Brakes Overheated Service Now” message that the brake fluid temperature is excessive and is about to boil. The system increases brake pedal effort and travel, and will also limit vehicle speed. The driver should immediately start a cool down lap if on the track. If this message displays, take the vehicle to be serviced at your dealer.

Brake Burnishing

For vehicles equipped with front Brembo brake systems:

Performance/racing brake pads are required prior to racing or closed track driving. Vehicles with option code JE2 have performance brake pads.

New brake pads must be burnished before racing or other competitive driving.

These procedures are specific to the V-Series brake package. This procedure should not be performed on other models as damage may result.

Caution

Performing the brake burnish procedure on a base brake system can result in brake damage.

Caution

The new vehicle break-in period should be completed before performing the brake burnish procedure, otherwise damage may occur to the powertrain/engine. See *New Vehicle Break-In* ⇨ *218*.

Caution

Brake fade will occur during this track burnish procedure and can cause brake pedal travel and force to increase. This could extend stopping distance until the brakes are fully burnished.

When this procedure is performed as instructed, it will not damage the brakes. The brake pads will smoke and produce an odor. The braking force

and pedal travel may increase. After the procedure, the brake pads may appear white at the rotor contact.

Perform this procedure only on dry pavement, in a safe manner, and in compliance with all local and state ordinances/laws regarding motor vehicle operation.

Brake Burnish Procedure

1. Apply the brakes 25 times starting at 100 km/h (60 mph) to 50 km/h (30 mph) while decelerating at 0.4 g. This is a medium brake application. Drive for at least 1 km (0.6 mi) between applying the brakes. This first step may be skipped if there are more than 320 km (200 mi) on the brake pads.
2. Apply the brakes 25 times starting at 100 km/h (60 mph) to 25 km/h (15 mph) while decelerating at 0.8 g. This is a hard brake application, without activating the Antilock Brake System (ABS). Drive for at least 1 km (0.6 mi) between applications.
3. Cool down: Drive at 100 km/h (60 mph) for approximately 15 km (10 mi) without using the brakes.
4. Apply the brakes 25 times from 100 km/h (60 mph) to 50 km/h (30 mph) while decelerating at 0.4 g. This is a medium brake application. Drive for at least 1 km (0.6 mi) between applications.

As with all high performance brake systems, some amount of brake squeal is normal.

Wheel Alignment

Wheel alignment suggested specs for track use:

- Front: -2.0 deg camber, 0.2 deg total toe
- Rear: -1.7 deg camber, 0.2 deg total toe

Vehicles Equipped with the Original Equipment Tires

Follow the requirements and recommendations for tire inflation pressures while driving on various types of tracks/courses. This helps to achieve a well-balanced vehicle and enhance tire traction performance.

Use good judgment to determine the appropriate tire inflation pressure and speeds for the track/course configuration and environmental conditions. Contact the tire manufacturer if further assistance is needed.

To maximize tire life, drive 800 km (500 mi) prior to racetrack driving or complete the minimum track running that will increase the tire pressures by 35 kPa (5 psi). After this, immediately let the tires cool to cold pressures.

Tire Inflation Pressure Guidelines

Tire inflation pressures affect vehicle handling and tire life, and should be adjusted for various types of tracks/courses.

Inspect the tires prior to every track/course session. Track/course driving will reduce the tire tread life.

Driving and Operating

⚠ Warning

Operating the vehicle at high speeds can be dangerous. Improper tire inflation pressure can put additional strain on the tires and

(Continued)

Warning (Continued)

can cause a sudden failure. Make sure the tires are in excellent condition, and use the correct cold tire inflation pressure for the vehicle load and track/course.

⚠ Warning

Tracks/courses put high loads on tires operating at high speed, which can lead to tire failure if not inflated properly. Always limit vehicle cargo to the driver plus one passenger with no additional cargo.

⚠ Warning

Track/course loads wear tires both on the tread and internal to the tire. When driven in track/course conditions, even if tread is not worn down to the treadwear indicator, tires must be replaced after the equivalent of two tanks of fuel or approximately 160 km (100 mi).

Tire Inflation Pressure for Tracks with Sustained High-Speed Operation on Banked Turns

(e.g., Daytona International Speedway, Indianapolis Motor Speedway, or similar)

Inflate tires to a minimum of 300 kPa (44 psi) when cold.

Do not reduce tire inflation pressure when hot.

Tire Inflation Pressure for Tracks with Combined High-Speed and High-Load Corners

(e.g., Nurburgring Nordschliefe, Spa Francorchamps, or similar)

Inflate tires to a minimum of 260 kPa (38 psi) when cold.

Limit vehicle speed to below 230 km/h (143 mph) until 290 kPa (42 psi) is reached.

For continuous track use, hot tire inflation pressure may be adjusted to a minimum of 290 kPa (42 psi).

Tire Inflation Pressure for Road/Street Courses

(e.g., Virginia International Raceway, Road Atlanta, or similar)

Inflate tires to a minimum of 240 kPa (35 psi) cold.

For continuous road/street course use, hot tire inflation pressure may be adjusted to a minimum of 270 kPa (39 psi).

Return the tires to the recommended cold tire inflation pressure when high-speed driving has ended. See *Vehicle Load Limits* ⇨ *214* and *Tire Pressure* ⇨ *346*.

Driving on Wet Roads

Rain and wet roads can reduce vehicle traction and affect your ability to stop and accelerate. Always drive slower in these types of driving conditions and avoid driving through large puddles and deep-standing or flowing water.

⚠ Warning

Wet brakes can cause crashes. They might not work as well in a quick stop and could cause pulling to one side. You could lose control of the vehicle.

After driving through a large puddle of water or a car/vehicle wash, lightly apply the brake pedal until the brakes work normally.

Flowing or rushing water creates strong forces. Driving through flowing water could cause the vehicle to be carried away. If this happens, you and other vehicle occupants could drown. Do not ignore police warnings and be very cautious about trying to drive through flowing water.

Hydroplaning

Hydroplaning is dangerous. Water can build up under the vehicle's tires so they actually ride on the water. This can happen if the road is wet enough and you are going fast enough. When the vehicle is hydroplaning, it has little or no contact with the road.

There is no hard and fast rule about hydroplaning. The best advice is to slow down when the road is wet.

Other Rainy Weather Tips

Besides slowing down, other wet weather driving tips include:

- Allow extra following distance.
- Pass with caution.
- Keep windshield wiping equipment in good shape.
- Keep the windshield washer fluid reservoir filled.
- Have good tires with proper tread depth. See *Tires* ⇨ *339*.
- Turn off cruise control.

Hill and Mountain Roads

Driving on steep hills or through mountains is different than driving on flat or rolling terrain. Tips include:

- Keep the vehicle serviced and in good shape.
- Check all fluid levels and brakes, tires, cooling system, and transmission.
- Shift to a lower gear when going down steep or long hills.

⚠ Warning

Using the brakes to slow the vehicle on a long downhill slope can cause brake overheating, can reduce brake performance, and could result in a loss of braking. Shift the transmission to a lower gear to let the engine assist the brakes on a steep downhill slope.

⚠ Warning

Coasting downhill in N (Neutral) or with the ignition off is dangerous. This can cause overheating of the brakes and loss of steering assist. Always have the engine running and the vehicle in gear.

- Drive at speeds that keep the vehicle in its own lane. Do not swing wide or cross the center line.

- Be alert on top of hills; something could be in your lane (e.g., stalled car, crash).
- Pay attention to special road signs (e.g., falling rocks area, winding roads, long grades, passing or no-passing zones) and take appropriate action.

Winter Driving

Driving on Snow or Ice

Snow or ice between the tires and the road creates less traction or grip, so drive carefully. Wet ice can occur at about 0 °C (32 °F) when freezing rain begins to fall. Avoid driving on wet ice or in freezing rain until roads can be treated.

For slippery road driving:

- Accelerate gently. Accelerating too quickly causes the wheels to spin and makes the surface under the tires slick.
- Turn on Traction Control. See *Traction Control/Electronic Stability Control* ⇨ *239*.
- Antilock Brake System (ABS) improves vehicle stability during hard stops, but the brakes should be applied sooner than when on dry pavement. See *Antilock Brake System (ABS)* ⇨ *236*.

  See *Driver Mode Control* ⇨ *241*.
- Allow greater following distance and watch for slippery spots. Icy patches can occur on otherwise clear roads in shaded areas. The surface of a curve or an overpass can remain icy when the surrounding roads are clear. Avoid sudden steering maneuvers and braking while on ice.
- Turn off cruise control.

Blizzard Conditions

Stop the vehicle in a safe place and signal for help. Stay with the vehicle unless there is help nearby. If possible, use Roadside Service. See *Roadside Service* ⇨ *403*. To get help and keep everyone in the vehicle safe:

- Turn on the hazard warning flashers.
- Tie a red cloth to an outside mirror.

⚠ Warning

Snow can trap engine exhaust under the vehicle. This may cause exhaust gases to get inside. Engine exhaust contains carbon monoxide (CO), which cannot be seen or smelled. It can cause unconsciousness and even death.

If the vehicle is stuck in snow:

- Clear snow from the base of the vehicle, especially any blocking the exhaust pipe.
- Open a window about 5 cm (2 in) on the vehicle side that is away from the wind, to bring in fresh air.
- Fully open the air outlets on or under the instrument panel.
- Adjust the climate control system to circulate the air inside the vehicle and set the fan speed to the highest setting. See “Climate Control Systems.”

For more information about CO, see *Engine Exhaust* ⇨ *226*.

To save fuel, run the engine for short periods to warm the vehicle and then shut the engine off and partially close the window. Moving about to keep warm also helps.

If it takes time for help to arrive, when running the engine, push the accelerator pedal slightly so the engine runs faster than the idle speed. This keeps the battery charged to restart the vehicle and to signal for help with the headlamps. Do this as little as possible, to save fuel.

If the Vehicle Is Stuck

Slowly and cautiously spin the wheels to free the vehicle when stuck in sand, mud, ice, or snow.

If stuck too severely for the traction system to free the vehicle, turn the traction system off and use the rocking method. See *Traction Control/ Electronic Stability Control* ⇨ *239*.

⚠ Warning

If the vehicle's tires spin at high speed, they can explode, and you or others could be injured. The vehicle can overheat, causing an engine compartment fire or other damage. Spin the wheels as little as possible and avoid going above 56 km/h (35 mph).

Rocking the Vehicle to Get it Out

Turn the steering wheel left and right to clear the area around the front wheels. Turn off any traction system. Shift back and forth between R (Reverse) and a low forward gear, spinning the wheels as little as possible. To prevent transmission wear, wait until the wheels stop spinning before shifting gears. Release the accelerator pedal while shifting, and press lightly on the accelerator pedal when the transmission is in gear. Slowly spinning the wheels in the forward and reverse directions causes a rocking motion that could free the vehicle. If that does not get the vehicle out after a few tries, it might need to be towed out. If the vehicle does need to be towed out, see *Towing the Vehicle* ⇨ *369*.

Vehicle Load Limits

It is very important to know how much weight the vehicle can carry. This weight is called the vehicle capacity weight and includes the weight of all occupants, cargo, and all nonfactory-installed options. Two labels on the vehicle may show how much weight it may properly carry: the Tire and Loading Information label and the Certification label.

⚠ Warning

Do not load the vehicle any heavier than the Gross Vehicle Weight Rating (GVWR), or either the maximum front or rear Gross Axle Weight Rating (GAWR). This can cause systems to break and change the way the vehicle handles.

(Continued)

Warning (Continued)

This could cause loss of control and a crash. Overloading can also reduce stopping performance, damage the tires, and shorten the life of the vehicle.

Tire and Loading Information Label

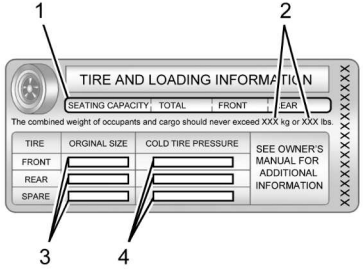

Label Example

A vehicle-specific Tire and Loading Information label is attached to the vehicle's center pillar (B-pillar). The Tire and Loading Information label shows the number of occupant seating positions (1), and the maximum vehicle capacity weight (2) in kilograms and pounds.

The Tire and Loading Information label also shows the tire size of the original equipment tires (3) and the recommended cold tire inflation pressures (4). For more information on tires and inflation see *Tires* ⇨ *339* and *Tire Pressure* ⇨ *346*.

There is also important loading information on the Certification label. It may show the Gross Vehicle Weight Rating (GVWR) and the Gross Axle Weight Rating (GAWR) for the front and rear axle. See “Certification Label” later in this section.

“Steps for Determining Correct Load Limit–

1. Locate the statement "The combined weight of occupants and cargo should never exceed XXX kg or XXX lbs." on your vehicle’s placard.
2. Determine the combined weight of the driver and passengers that will be riding in your vehicle.
3. Subtract the combined weight of the driver and passengers from XXX kg or XXX lbs.
4. The resulting figure equals the available amount of cargo and luggage load capacity. For example, if the "XXX" amount equals 1400 lbs. and there will be five 150 lb passengers in your vehicle, the amount of available cargo and luggage load capacity is 650 lbs. (1400-750 (5 x 150) = 650 lbs.)

5. Determine the combined weight of luggage and cargo being loaded on the vehicle. That weight may not safely exceed the available cargo and luggage load capacity calculated in Step 4.
6. If your vehicle will be towing a trailer, load from your trailer will be transferred to your vehicle. Consult this manual to determine how this reduces the available cargo and luggage load capacity of your vehicle."

See *Trailer Towing (LSY 2.0L L4 Engine)* ⇨ *300* for important information on towing a trailer, towing safety rules, and trailering tips.

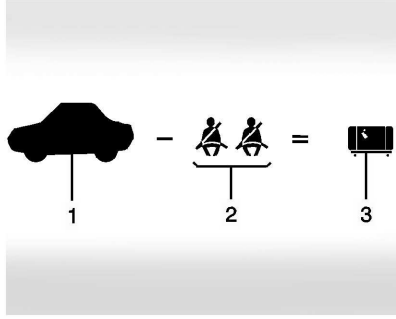

Example 1

1. Vehicle Capacity Weight for Example 1 = 453 kg (1,000 lbs).
2. Subtract Occupant Weight @ 68 kg (150 lbs) × 2 = 136 kg (300 lbs).
3. Available Occupant and Cargo Weight = 317 kg (700 lbs).

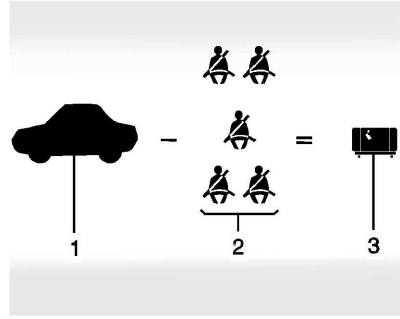

Example 2

1. Vehicle Capacity Weight for Example 2 = 453 kg (1,000 lbs).
2. Subtract Occupant Weight @ 68 kg (150 lbs) × 5 = 340 kg (750 lbs).
3. Available Cargo Weight = 113 kg (250 lbs).

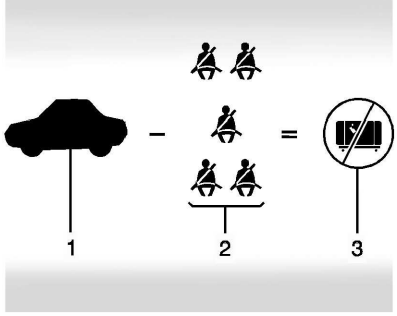

Example 3

1. Vehicle Capacity Weight for Example 3 = 453 kg (1,000 lbs).
2. Subtract Occupant Weight @ 91 kg (200 lbs) × 5 = 453 kg (1,000 lbs).
3. Available Cargo Weight = 0 kg (0 lbs).

Refer to the vehicle's Tire and Loading Information label for specific information about the vehicle's capacity weight and seating positions. The combined weight of the driver, passengers, and cargo should never exceed the vehicle's capacity weight.

Certification Label

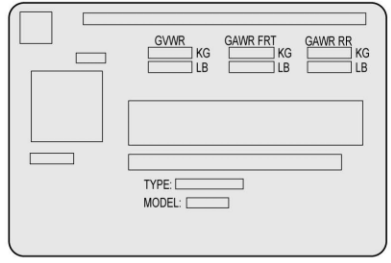

Label Example

A vehicle-specific Certification label is attached to the vehicle's center pillar (B-pillar). The label may show the gross weight capacity of the vehicle, called the Gross Vehicle Weight Rating (GVWR). The GVWR includes the weight of the vehicle, all occupants, fuel, and cargo.

⚠ Warning

Things inside the vehicle can strike and injure people in a sudden stop or turn, or in a crash.

- Put things in the cargo area of the vehicle. In the cargo area, put them as far forward as possible. Try to spread the weight evenly.
- Never stack heavier things, like suitcases, inside the vehicle so that some of them are above the tops of the seats.
- Do not leave an unsecured child restraint in the vehicle.
- Secure loose items in the vehicle.
- Do not leave a seat folded down unless needed.

Starting and Operating

New Vehicle Break-In

Follow these recommended guidelines during the first 2 400 km (1,500 mi) of driving this vehicle. Parts have a break-in period and performance will be better in the long run.

For the first 2 400 km (1,500 mi):

- Avoid full throttle starts and abrupt stops.
- Do not exceed 4000 engine rpm.
- Avoid driving at any one constant speed, fast or slow.
- Avoid downshifting to brake or slow the vehicle when the engine speed will exceed 4000 rpm.
- Do not let the engine labor. Never lug the engine in high gear at low speeds.
- Do not participate in track events, sport driving schools, or similar activities during this break-in period.
- Check engine oil with every refueling and add if necessary. Oil and fuel consumption may be higher than normal during the first 2 400 km (1,500 mi).
- To break in new tires, drive at moderate speeds and avoid hard cornering for the first 300 km (200 mi). New tires do not have maximum traction and may tend to slip.
- New brake linings also need a break-in period. Avoid making hard stops during the first 300 km (200 mi). This is recommended every time brake linings are replaced.

Composite Materials

This vehicle may be equipped with parts containing carbon fiber, sheet-molding compound, or other composite materials. Dealer-installed accessories may also contain composite materials.

⚠ Warning

Exposed edges of parts containing carbon fiber and other composite materials can be sharp. Contact with these parts could result in injury. Use caution to avoid contacting these parts, including when washing the vehicle. If the parts are damaged, replace the parts promptly with replacements from your dealer.

⚠ Warning

Rocker extensions may break under pressure, resulting in property damage or injury. Do not stand on the rocker extension or use it as a step.

⚠ Warning

Rear end spoilers may break under pressure, resulting in property damage or injury. Do not push the vehicle by the spoiler or use the spoiler as a handle.

Ignition Positions

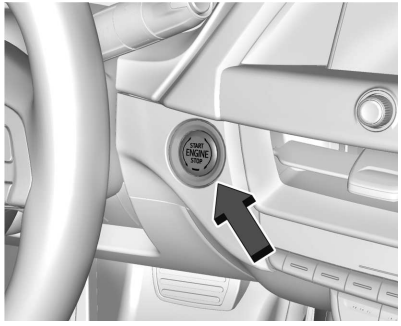

The vehicle has an electronic keyless ignition with pushbutton start.

The remote key must be in the vehicle for the system to operate. If the pushbutton start is not working, the vehicle may be near a strong radio antenna signal causing interference to the Keyless Access system. See *Remote Keyless Entry (RKE) System Operation* ⇨ *7*.

To shift out of P (Park), the vehicle must be on, and the brake pedal must be applied.

Stopping the Engine/OFF (No Indicator Lights) : When the vehicle is stopped, press ENGINE START/STOP once to turn the engine off.

If the vehicle is in P (Park), the ignition will turn off, and Retained Accessory Power (RAP) will remain active. See *Retained Accessory Power (RAP)* ⇨ *223*.

If the vehicle is not in P (Park), the ignition will return to ACC/ACCESSORY and display a message in the Driver Information Center (DIC). When the vehicle is shifted into P (Park), the ignition system will switch to OFF.

The vehicle may have an electric steering column lock. The lock is activated when the vehicle is switched to OFF and the driver door is opened. A sound may be heard as the lock actuates or releases. The steering column lock may not release with the wheels turned off center. If this happens, the vehicle may not start. Move the steering wheel from left to right while attempting to start the vehicle. If this does not work, the vehicle needs service.

Do not turn the engine off when the vehicle is moving. This will cause a loss of power assist in the brake and steering systems and disable the airbags.

If the vehicle must be shut off in an emergency:

1. Brake using a firm and steady pressure. Do not pump the brakes repeatedly. This may deplete power assist, requiring increased brake pedal force.
2. Shift the vehicle to N (Neutral). This can be done while the vehicle is moving. After shifting to N (Neutral), firmly apply the brakes and steer the vehicle to a safe location.
3. Come to a complete stop, shift to P (Park), and turn the ignition to OFF. On vehicles with an automatic transmission, the shift lever must be in P (Park) to turn the ignition switch to the OFF position.
4. Set the parking brake. See *Electric Parking Brake* ⇨ *237*.

⚠ Warning

Turning off the vehicle while moving may cause loss of power assist in the brake and steering systems and disable the airbags. While driving, only shut the vehicle off in an emergency.

If the vehicle cannot be pulled over, and must be shut off while driving, press and hold the ENGINE START/STOP button for longer than two seconds, or press twice in five seconds.

ACC/ACCESSORY (Amber Indicator Light) : This mode allows you to use some electrical accessories when the engine is off.

With the ignition off, pressing the button one time without the brake pedal applied will place the ignition system in ACC/ACCESSORY.

The ignition will switch from ACC/ACCESSORY to OFF after five minutes to prevent battery rundown.

ON/RUN/START (Green Indicator Light) : This mode is for driving and starting. With the ignition off, and the brake pedal applied, pressing the button once will place the ignition system in ON/RUN/START. Once engine cranking begins, release the button. Engine cranking will continue until the engine starts. See *Starting the Engine* ⇨ *220*. The vehicle will then remain on.

Service Mode

This power mode is available for service and diagnostics, and to verify the proper operation of the malfunction indicator lamp as may be required for emission inspection purposes. With the vehicle off, and the brake pedal not applied, pressing and holding the button for more than five seconds will place the vehicle in Service Mode. The instruments and audio systems will operate as they do in ON/RUN, but the vehicle will not be able to be driven. The engine will not start in Service Mode. Press the button again to turn the vehicle off.

Starting the Engine

Place the transmission in the proper gear

Caution

If you add electrical parts or accessories, you could change the way the engine operates. Any resulting damage would not be covered by the vehicle warranty. See *Add-On Electrical Equipment* ⇨ *303*.

Move the shift lever to P (Park) or N (Neutral). To restart the vehicle when it is already moving, use N (Neutral) only.

Caution

Do not try to shift to P (Park) if the vehicle is moving. If you do, you could damage the transmission. Shift to P (Park) only when the vehicle is stopped.

Starting the Vehicle

1. Press the brake pedal, then press ENGINE START/STOP on the instrument panel.

If the remote key is not in the vehicle, if there is interference, or if the remote key battery is low, a Driver Information Center (DIC) message will display. See *Remote Keyless Entry (RKE) System Operation* ⇨ *7*.

Caution

Cranking the engine for long periods of time, by pressing ENGINE START/STOP immediately after cranking has ended, can overheat and damage the cranking motor, and drain the battery. Wait at least 15 seconds between each try, to let the cranking motor cool down.

2. If the engine does not start after five to 10 seconds, especially in very cold weather (below –18 °C or 0 °F), it could be flooded with too much gasoline. Try pushing the accelerator pedal all the way to the floor and hold it there, then press ENGINE START/STOP for up to a maximum of 15 seconds. Wait at least 15 seconds between each try, to allow the cranking motor to cool down. When the engine starts, let go of the button and the accelerator. If the vehicle starts briefly but then stops again, do the same thing. This clears the extra gasoline from the engine. Do not race the engine immediately after starting it. Operate the engine and transmission gently until the oil warms up and lubricates all moving parts.

Stopping the Engine

Move the shift lever to P (Park) and press and hold ENGINE START/STOP on the instrument panel, until the engine shuts off. If the shift lever is not in P (Park), the engine shuts off and the ignition goes to ACC/ ACCESSORY. The DIC displays SHIFT TO PARK. Once the shift lever is moved to P (Park), the vehicle turns off.

If the remote key is not detected inside the vehicle when it is turned off the DIC displays a message.

Stop/Start System

The Stop/Start system will shut off the engine to help conserve fuel. It has components designed for the increased number of starts.

⚠ Warning

The automatic engine Stop/Start feature causes the engine to shut off while the vehicle is still on. Do not exit the vehicle before shifting to P (Park). The vehicle may restart and move unexpectedly. Always shift to P (Park), and then turn the ignition off before exiting the vehicle.

Auto Engine Stop/Start

When the brakes are applied and the vehicle is at a complete stop, the engine may turn off. When stopped, the tachometer displays AUTO STOP. See *Tachometer* ⇨ *93*. When the brake pedal is released or the accelerator pedal is pressed, the engine will restart.

To maintain vehicle performance, other conditions may cause the engine to automatically restart before the brake pedal is released.

Auto Stops may not occur and/or Auto Starts may occur because:

- The climate control settings require the engine to be running to cool or heat the vehicle interior.
- The vehicle battery needs to charge.
- The vehicle battery has recently been disconnected.
- Minimum vehicle speed has not been reached since the last Auto Stop.
- The accelerator pedal is pressed.
- The engine or transmission is not at the required operating temperature.
- The outside temperature is not in the required operating range.
- The vehicle transmission is shifted out of D (Drive) to any gear other than P (Park).
- Certain driver modes have been selected. See *Driver Mode Control* ⇨ *241*.
- The vehicle is on a steep hill or grade.
- The driver door has been opened or the driver seat belt has been unbuckled.
- The hood has been opened.
- The Auto Stop has reached the maximum allowed time.

Auto Stop Disable Switch

The automatic engine Stop/Start feature can be disabled and enabled by pressing the switch with the Ⓐ symbol. Auto Stop is enabled each time you start the vehicle.

When Ⓐ is illuminated, the system is enabled.

Engine Heater

Vehicles with the engine heater can use this option in cold weather conditions at or below –18 °C (0 °F) for easier starting and better fuel economy during engine warm-up. Plug in the engine heater at least four hours before starting your vehicle. An internal thermostat in the plug-end of the cord may exist which will prevent engine heater operation at temperatures above –18 °C (0 °F).

The engine heater cord requires the front license plate mounting bracket to be installed. See your dealer for more information.

To Use the Engine Heater

1. Turn off the engine.
2. Open the hood and unwrap the electrical cord. The cord is clipped to the diagonal brace on the passenger side of the engine compartment.

   Check the heater cord for damage. If it is damaged, do not use it. See your dealer for a replacement. Inspect the cord for damage yearly.

3. Plug it into a normal, grounded 110-volt AC outlet.

⚠ Warning

Improper use of the heater cord or an extension cord can damage the cord and may result in overheating and fire.

- Plug the cord into a three-prong electrical utility receptacle that is protected by a ground fault detection function. An ungrounded outlet could cause an electric shock.
- Use a weatherproof, heavy-duty, 15 amp-rated extension cord if needed. Failure to use the recommended extension cord in good operating condition, or using a damaged heater or extension cord, could make it

(Continued)

Warning (Continued)

overheat and cause a fire, property damage, electric shock, and injury.

- Do not operate the vehicle with the heater cord permanently attached to the vehicle. Possible heater cord and thermostat damage could occur.
- While in use, do not let the heater cord touch vehicle parts or sharp edges. Never close the hood on the heater cord.
- Before starting the vehicle, unplug the cord, reattach the cover to the plug, and securely fasten the cord. Keep the cord away from any moving parts.

4. Before starting the engine, be sure to unplug and store the cord as it was before to keep it away from moving engine parts. If you do not, it could be damaged.

Contact your dealer for information on how long to use the heater in your particular area.

Retained Accessory Power (RAP)

When the ignition is turned from on to off, the following features (if equipped) will continue to function for up to 10 minutes, or until the driver door is opened. These features will also work when the ignition is in RUN or ACC/ACCESSORY:

- Infotainment System
- Power Windows (during RAP this functionality will be lost when any door is opened)
- Sunroof (during RAP this functionality will be lost when any door is opened)
- Auxiliary Power Outlet
- Audio System
- OnStar System

Shifting Into Park (Mechanical Shifter)

1. Hold the brake pedal down and set the parking brake. See *Electric Parking Brake* ⇨ *237*.

2. Move the shift lever into P (Park) by holding in the button on the shift lever and pushing the shift lever all the way toward the front of the vehicle.
3. Turn the ignition off.

Leaving the Vehicle with the Engine Running

⚠ Warning

It can be dangerous to leave the vehicle with the engine running. It could overheat and catch fire.

It is dangerous to get out of the vehicle if the shift lever is not fully in P (Park) with the parking brake firmly set. The vehicle can roll.

Do not leave the vehicle when the engine is running. If you have left the engine running, the vehicle can move suddenly. You or others could be injured. To be sure the vehicle will not move, even when you are on fairly level ground, always set the parking brake and move the

(Continued)

Warning (Continued)

shift lever to P (Park). See *Shifting Into Park (Mechanical Shifter)* ⇨ *223* or *Shifting Into Park (Electronic Shifter)* ⇨ *224*. If you are towing a trailer, see *Driving Characteristics and Towing Tips* ⇨ *297*.

If you have to leave the vehicle with the engine running, be sure the vehicle is in P (Park) and the parking brake is set before you leave it. After you have moved the shift lever into P (Park), hold the regular brake pedal down. Then, see if you can move the shift lever away from P (Park) without first pressing the button.

If you can, it means that the shift lever was not fully locked in P (Park).

Torque Lock

Torque lock is when the weight of the vehicle puts too much force on the parking pawl in the transmission. This happens when parking on a hill and shifting the transmission into P (Park) is not done properly and then it is difficult to shift out of P (Park). To prevent torque lock, set the parking brake and then shift into P (Park). To find out how, see “Shifting Into Park” listed previously.

If torque lock does occur, your vehicle may need to be pushed uphill by another vehicle to relieve the parking pawl pressure, so you can shift out of P (Park).

Shifting Into Park (Electronic Shifter)

To shift into P (Park):

1. Hold the brake pedal down and set the parking brake. See *Electric Parking Brake* ⇨ *237*.
2. Press the button on top of the shift lever to shift into P (Park). See *Automatic Transmission (Mechanical Shifter)* ⇨ *227* or *Automatic Transmission (Electronic Shifter)* ⇨ *229*.
3. The P indicator on the shift lever will turn red when the vehicle is in P (Park).

Leaving the Vehicle with the Engine Running

⚠ Warning

It can be dangerous to leave the vehicle with the engine running. It could overheat and catch fire.

It is dangerous to get out of the vehicle if the vehicle is not in P (Park) with the parking brake set. The vehicle can roll.

Do not leave the vehicle when the engine is running. If you have left the engine running, the vehicle can move suddenly. You or others could be injured. To be sure the vehicle will not move, even when you are on fairly level ground, always set the parking brake and shift to P (Park). See *Shifting Into Park (Mechanical Shifter)* ⇨ *223* or *Shifting Into Park (Electronic Shifter)* ⇨ *224*. If you are towing a trailer, see *Driving Characteristics and Towing Tips* ⇨ *297*.

If you have to leave the vehicle with the engine running, be sure the vehicle is in P (Park) and the parking brake is set before you leave it.

If you are towing a trailer and parking on a hill, see *Driving Characteristics and Towing Tips* ⇨ *297*.

Shifting out of Park (Mechanical Shifter)

This vehicle is equipped with an electronic shift lock release system. The shift lock release is designed to prevent movement of the shift lever out of P (Park), unless the ignition is on and the brake pedal is applied.

The shift lock release is always functional except in the case of an uncharged or low voltage (less than 9 volt) battery.

If the vehicle has an uncharged battery or a battery with low voltage, try charging or jump starting the battery. See *Jump Starting - North America* ⇨ *366* for more information.

To shift out of P (Park):

1. Apply the brake pedal.
2. Release the parking brake. See *Electric Parking Brake* ⇨ *237*.
3. Press the shift lever button.
4. Move the shift lever.

If unable to shift out of P (Park):

1. Fully release the shift lever button.
2. While holding down the brake pedal, press the shift lever button again.
3. Move the shift lever.

If the shift lever will not move from P (Park), consult your dealer or a professional towing service.

Shifting out of Park (Electronic Shifter)

This vehicle is equipped with an electronic transmission. The shift lock release button is designed to prevent inadvertent shifting out of P (Park).

To shift out of P (Park):

1. Ensure the engine is running.
2. Apply the brake pedal.
3. Press and hold the shift lock release button on the shift lever.
4. Move the shift lever to the desired position. For N (Neutral) hold the lever in the N (Neutral) position until the N indicator illuminates red.
5. The P indicator will turn white and the gear indicator will turn red when the vehicle is no longer in P (Park).
6. After releasing the shift lever, it will return to the center position.

If the vehicle cannot shift from P (Park), a Driver Information Center (DIC) message may be displayed. Check that the ignition is on, the engine is running, the brake pedal is applied, and the shift lock release button is pressed when you are attempting to shift out of P (Park). If all of these are met but the vehicle will not shift out of P (Park), see your dealer for service.

Parking over Things That Burn

⚠ Warning

Things that can burn could touch hot exhaust parts under the vehicle and ignite. Do not park over papers, leaves, dry grass, or other things that can burn.

Extended Parking

It is best not to park with the vehicle running. If the vehicle is left running, be sure it will not move and there is adequate ventilation.

See *Shifting Into Park (Mechanical Shifter)* ⇨ *223* or *Shifting Into Park (Electronic Shifter)* ⇨ *224* and *Engine Exhaust* ⇨ *226*.

If the vehicle is left parked and running with the remote key outside the vehicle, it will continue to run for up to 15 minutes.

If the vehicle is left parked and running with the remote key inside the vehicle, it will continue to run for up to 30 minutes.

The vehicle could turn off sooner if it is parked on a hill, due to lack of available fuel.

The timer will reset if the vehicle is taken out of P (Park) while it is running.

Engine Exhaust

⚠ Warning

Engine exhaust contains carbon monoxide (CO), which cannot be seen or smelled. Exposure to CO can cause unconsciousness and even death.

Exhaust may enter the vehicle if:

- The vehicle idles in areas with poor ventilation (parking garages, tunnels, deep snow that may block underbody airflow or tail pipes).

(Continued)

Warning (Continued)

- The exhaust smells or sounds strange or different.
- The exhaust system leaks due to corrosion or damage.
- The vehicle exhaust system has been modified, damaged, or improperly repaired.
- There are holes or openings in the vehicle body from damage or aftermarket modifications that are not completely sealed.

If unusual fumes are detected or if it is suspected that exhaust is coming into the vehicle:

- Drive it only with the windows completely down.
- Have the vehicle repaired immediately.

Never park the vehicle with the engine running in an enclosed area such as a garage or a building that has no fresh air ventilation.

Running the Vehicle While Parked

It is better not to park with the engine running. See *Engine Exhaust* ⇨ *226*.

If the vehicle is left with the engine running, follow the proper steps to be sure the vehicle will not move. See *Shifting Into Park (Mechanical Shifter)* ⇨ *223* or *Shifting Into Park (Electronic Shifter)* ⇨ *224* and *Electric Parking Brake* ⇨ *237*.

Automatic Transmission

Automatic Transmission (Mechanical Shifter)

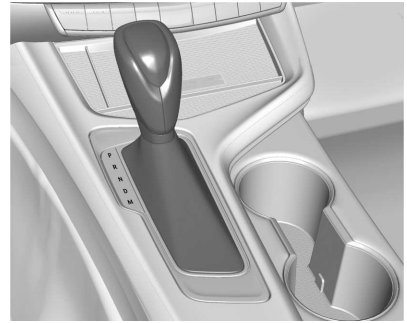

There are several different positions for the shift lever.

P : This position locks the drive wheels. Use P (Park) when starting the vehicle to ensure the vehicle does not move.

⚠ Warning

It is dangerous to get out of the vehicle if the shift lever is not fully in P (Park) with the parking brake firmly set. The vehicle can roll.

Do not leave the vehicle when the engine is running unless you have to. If you have left the engine running, the vehicle can move suddenly. You or others could be injured. To be sure the vehicle will not move, even when you are on fairly level ground, always set the parking brake and move the shift lever to P (Park). See *Shifting Into Park (Mechanical Shifter)* ➪ *223* or *Shifting Into Park (Electronic Shifter)* ➪ *224*. If you are pulling a trailer, see *Driving Characteristics and Towing Tips* ➪ *297*.

Make sure the shift lever is fully in P (Park) before starting the engine. The vehicle has an electronic shift lock release system. Fully apply the regular brakes first and then press the shift lever button before shifting from P (Park) when the ignition is on. If you cannot shift out of P (Park), ease pressure on the shift lever and push the shift lever all the way into P (Park) as you maintain brake application. Then press the shift lever button and move the shift lever into another gear. See *Shifting out of Park (Mechanical Shifter)* ➪ *225* or *Shifting out of Park (Electronic Shifter)* ➪ *225*.

Caution

Shifting to R (Reverse) while the vehicle is moving forward could damage the transmission. The repairs would not be covered by the vehicle warranty. Shift to R (Reverse) only after the vehicle is stopped.

R : Use this gear to back up.

At low vehicle speeds, R (Reverse) can be used to rock the vehicle back and forth to get out of snow, ice, or sand without damaging the transmission. See *If the Vehicle Is Stuck* ➪ *214*.

N : In this position, the engine does not connect with the wheels. To restart the engine when the vehicle is already moving, use N (Neutral) only.

⚠ Warning

Shifting into a drive gear while the engine is running at high speed is dangerous. Unless your foot is firmly on the brake pedal, the vehicle could move very rapidly. You could lose control and hit people or objects. Do not shift into a drive gear while the engine is running at high speed.

Caution

Shifting out of P (Park) or N (Neutral) with the engine running at high speed may damage the transmission. The repairs would not be covered by the vehicle warranty. Be sure the engine is not running at high speed when shifting the vehicle.

Caution

A transmission hot message may display if the automatic transmission fluid is too hot. Driving under this condition can damage the vehicle. Stop and idle the engine to cool the automatic transmission fluid. This message clears when the transmission fluid has cooled sufficiently.

D : This position is for normal driving. If more power is needed for passing, press the accelerator pedal down.

Downshifting the transmission in slippery road conditions could result in skidding. See “Skidding” under *Loss of Control* ⇨ *206*.

M : This mode can be entered by moving the shift lever from D (Drive) to M (Manual Mode). M (Manual Mode) allows the driver to select gears appropriate for current driving conditions. M (Manual Mode) can be exited by returning the shift lever to D (Drive). See *Manual Mode (Electronic Shifter)* ⇨ *235* or *Manual Mode (Mechanical Shifter)* ⇨ *234*.

Caution

Spinning the tires or holding the vehicle in one place on a hill using only the accelerator pedal may damage the transmission. The repair will not be covered by the vehicle warranty. If the vehicle is stuck, do not spin the tires. When stopping on a hill, use the brakes to hold the vehicle in place.

While in Sport or Track Mode, the vehicle monitors driving behavior, and automatically enables Performance Shift Features when spirited driving is detected. These features maintain lower transmission gears to increase available engine braking and improve acceleration response. The vehicle will exit these features and return to Sport or Track Mode normal operation after a short period when no spirited driving is detected. See *Driver Mode Control* ⇨ *241*.

Engine speeds may be increased while driving at highway speeds while the engine is still warming up.

Automatic Transmission (Electronic Shifter)

The shift pattern is displayed in the top of the shift lever. The selected gear position will illuminate red on the shift lever, while all others will be displayed in white. If the shift is not immediate, as in very cold conditions, the indicator on the shift lever may flash until it is fully engaged.

The shift lever always starts from a center position, represented by an up/down arrow on the shift pattern. After releasing the shift lever, it will return to the center position.

The transmission does not operate when the vehicle is off.

If the vehicle is in ACC/ACCESSORY, the transmission can be shifted into P (Park).

If the vehicle is turned off while at a relatively high vehicle speed, the transmission will automatically shift to N (Neutral). Once the vehicle is stopped, P (Park) is automatically selected.

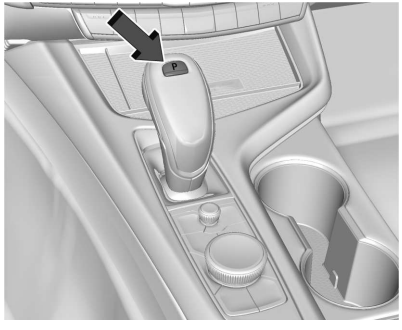

P : This position locks the drive wheels. Use P (Park) when starting the engine to prevent the vehicle from moving easily.

⚠ Warning

It is dangerous to get out of the vehicle if the transmission is not in P (Park) with the parking brake set. The vehicle can roll.

Do not leave the vehicle when the engine is running. If the engine has been left running, the vehicle can move suddenly. You or others could be injured. To be sure the vehicle will not move, even when on fairly level ground, always set the parking brake and place the transmission into P (Park). See *Shifting Into Park (Mechanical Shifter)* ⇨ *223* or *Shifting Into Park (Electronic Shifter)* ⇨ *224* and *Electric Parking Brake* ⇨ *237*.

This vehicle is equipped with an electronic controlled transmission. The shift lock release button is designed to prevent inadvertent shifting out of P (Park) unless the ignition is on, the brake pedal is applied, and the shift lock release button is pressed.

When the vehicle is stopped, press ENGINE START/STOP to turn off the vehicle. The transmission will shift to P (Park) automatically, unless the vehicle is in N (Neutral). See “Car Wash Mode” later in this section.

The vehicle will not shift into P (Park) if it is moving too fast. Stop the vehicle and shift into P (Park).

To shift in and out of P (Park), see *Shifting Into Park (Mechanical Shifter)* ⇨ *223* or *Shifting Into Park (Electronic Shifter)* ⇨ *224* and *Shifting out of Park (Mechanical Shifter)* ⇨ *225* or *Shifting out of Park (Electronic Shifter)* ⇨ *225*.

Service Shift Lever Message

If the message SERVICE SHIFTER SEE OWNER'S MANUAL appears in the Driver Information Center (DIC), the shift lever needs service. Have the vehicle serviced as soon as possible. If the vehicle is automatically shifting into P (Park), check to see if the P (Park) button on top of the shift lever is stuck. To operate the vehicle, hold the shift lever in the desired gear, R (Reverse) or D (Drive), until vehicle speed exceeds 15 km/h (10 mph), then release the shift lever.

R : Use this gear to back up.

If the vehicle is shifted from either R (Reverse) to D (Drive), or D (Drive) or M (Manual Mode) to R (Reverse) while the speed is too high, the vehicle will shift to N (Neutral). Reduce the vehicle speed and try the shift again.

To shift into R (Reverse):

1. Bring the vehicle to a complete stop.
2. Press and hold shift lock release button on the side of the shift lever.
3. From the center position, move the shift lever forward through the first detent to the end of travel. R is illuminated in red.
4. After releasing the shift lever, it will return to the center position.

To shift out of R (Reverse):

1. Bring the vehicle to a complete stop.
2. Shift to the desired gear.
3. After releasing the shift lever, it will return to the center position.

At low vehicle speeds, R (Reverse) can be used to rock the vehicle back and forth to get out of snow, ice, or sand without damaging the transmission. See *If the Vehicle Is Stuck* ⇨ *214*.

N : In this position, the engine does not connect with the wheels. To restart the engine when the vehicle is already moving, use N (Neutral) only.

⚠ Warning

Shifting into a drive gear while the engine is running at high speed is dangerous. Unless your foot is firmly on the brake pedal, the vehicle could move very rapidly. You could lose control and hit people or objects. Do not shift into a drive gear while the engine is running at high speed.

Caution

Shifting out of P (Park) or N (Neutral) with the engine running at high speed may damage the transmission. The repairs would not be covered by the vehicle warranty. Be sure the engine is not running at high speed when shifting the vehicle.

The vehicle is not designed to stay in N (Neutral) for more than five minutes. It may automatically shift into P (Park). N (Neutral) is not intended for towing. If the vehicle needs to be towed, see *Towing the Vehicle* ⇨ *369*.

To shift into N (Neutral):

1. Move the shift lever forward to the first detent from the center position.
   - If the vehicle is in P (Park), apply the brake pedal and press the shift lock release button while moving the shift lever forward.
   - N will illuminate in red.
2. After releasing the shift lever, it will return to the center position.

To shift out of N (Neutral):

1. Bring the vehicle to a complete stop.
2. Shift to the desired gear. If shifting from N (Neutral) to R (Reverse) the shift lock release button will need to be pressed.
3. After releasing the shift lever, it will return to the center position.

Car Wash Mode

This vehicle includes a Car Wash Mode that allows the vehicle to remain in N (Neutral) for use in automatic car washes.

Car Wash Mode (Engine Off – Driver in Vehicle)

To place the vehicle in N (Neutral) with the engine off and the vehicle occupied:

1. Drive to the entrance of the car wash.
2. Apply the brake pedal.
3. Shift to N (Neutral).
4. Turn off the engine and release the brake pedal.
5. The indicator should continue to show N. If it does not, repeat Steps 2–4.
6. The vehicle is now ready for the car wash.

Car Wash Mode (Engine Off – Driver out of Vehicle)

To place the vehicle in N (Neutral) with the engine off and the vehicle unoccupied:

1. Drive to the entrance of the car wash.
2. Apply the brake pedal.
3. Open the door.
4. Shift to N (Neutral).
5. Turn off the engine and release the brake pedal.
6. The indicator should continue to show N. If it does not, repeat Steps 2–5.
7. Exit the vehicle and close the door. The vehicle is now ready for the car wash.
8. The vehicle may automatically shift to P (Park) upon re-entry.

Car Wash Mode (Engine On – Driver in Vehicle)

To place the vehicle in N (Neutral) with the engine on and the vehicle occupied:

1. Drive to the entrance of the car wash.
2. Apply the brake pedal.
3. Shift to N (Neutral).
4. Release the brake pedal. The vehicle is now ready for the car wash.

Car Wash Mode (Engine On – Driver out of Vehicle)

To place the vehicle in N (Neutral) with the engine on and the vehicle unoccupied:

1. Drive to the entrance of the car wash.
2. Apply the brake pedal.
3. Open the door.
4. Shift to N (Neutral), then release the brake pedal.
5. The indicator should continue to show N. If it does not, repeat Steps 2–4.
6. Exit the vehicle and close the door. The vehicle is now ready for the car wash.
7. The vehicle may automatically shift to P (Park) upon re-entry.

Caution

A transmission hot message may display if the automatic transmission fluid is too hot. Driving under this condition can damage the vehicle. Stop and idle the engine to cool the automatic transmission fluid. This message clears when the transmission fluid has cooled sufficiently.

D : This position is for normal driving. If more power is needed for passing, press the accelerator pedal down.

To shift into D (Drive):

1. Bring the vehicle to a complete stop.
2. From the center position, move the shift lever back.
   - If the vehicle is in P (Park) press the shift lock release button while pulling the shift lever back.
   - D will illuminate in red.
   - After releasing the shift lever, it will return to the center position.

To shift out of D (Drive):

1. Bring the vehicle to a complete stop.
2. Shift to the desired gear.
3. After releasing the shift lever, it will return to the center position.

Downshifting the transmission in slippery road conditions could result in skidding. See “Skidding” under *Loss of Control* ⇨ *206*.

Caution

Spinning the tires or holding the vehicle in one place on a hill using only the accelerator pedal may damage the transmission. The repair will not be covered by the vehicle warranty. If the vehicle is stuck, do not spin the tires. When stopping on a hill, use the brakes to hold the vehicle in place.

Manual Mode (Mechanical Shifter)

Tap Shift

Caution

Driving with the engine at a high rpm without upshifting while using Tap Shift, could damage the vehicle. Always upshift when necessary while using Tap Shift.

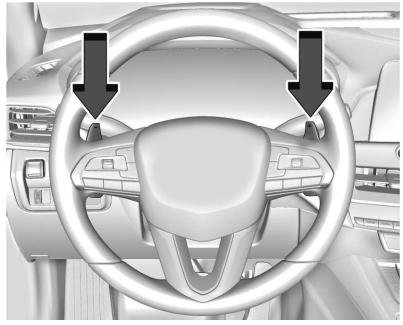

Vehicles with Tap Shift have controls on the back of the steering wheel to manually shift the automatic transmission.

To enter Permanent Tap Shift Mode:

1. Move the shift lever from D (Drive) to M (Manual Mode). While in Tap Shift Mode, the M on the instrument cluster will become highlighted, and the current gear is indicated.
2. Tap the left control to downshift, and the right control to upshift. To shift to the lowest available gear, press and hold the left control.
3. To exit, move the shift lever back to D (Drive).

With the shift lever in D (Drive) and not in Permanent Tap Shift Mode, the tap shift controls will activate a temporary tap manual shift mode, allowing the transmission to be manually shifted. While in Temporary Tap Shift Mode, the D on the instrument cluster will be highlighted and the current gear shown. Automatic shifts return after no manual shifts have been done for seven to 10 seconds. The Temporary Tap Shift Mode can also be deactivated by holding the right upshift control briefly.

While using Tap Shift, the vehicle will have firmer, quicker shifting. You can use this for sport driving or when climbing or descending hills, to stay in gear longer, or to downshift for more power or engine braking.

The transmission will only allow you to shift into gears appropriate for the vehicle speed and engine revolutions per minute (rpm). The transmission will not automatically shift to the next

lower gear if the engine rpm is too high, nor to the next higher gear when the maximum engine rpm is reached.

If shifting is prevented for any reason, a SHIFT DENIED message will be displayed in the instrument cluster.

When accelerating the vehicle from a stop in snowy and icy conditions, it is suggested to shift into second gear. A higher gear allows the vehicle to gain more traction on slippery surfaces.

Manual Mode (Electronic Shifter)

Tap Shift

Caution

Driving with the engine at a high rpm without upshifting while using Tap Shift, could damage the vehicle. Always upshift when necessary while using Tap Shift.

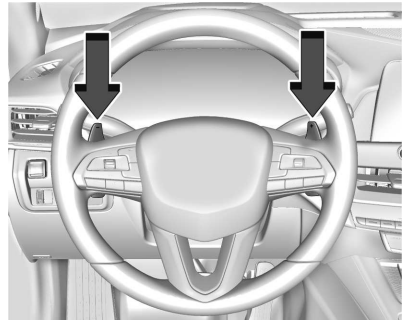

If equipped, vehicles with Tap Shift have controls on the back of the steering wheel to manually shift the automatic transmission.

Permanent Tap Shift Mode

To enter Permanent Tap Shift Mode:

1. With the vehicle in D (Drive), pull back on the shift lever to activate M (Manual Mode). The M in the shift pattern will illuminate in red, and the D will switch to white. While in Permanent Tap Shift Mode, the M on the instrument cluster will be highlighted and the current gear shown.
2. After releasing the shift lever, it will return to the center position.
3. Pull the control toward you to shift. Pull the left control to downshift, and the right control to upshift. To shift to the lowest available gear, pull and hold the left control.

To exit Permanent Tap Shift Mode:

1. To exit M (Manual Mode) and return to D (Drive), pull back on the shift lever. The D in the shift pattern will illuminate in red, and the M will switch to white.
2. After releasing the shift lever, it will return to the center position.

M (Manual Mode) can be exited to return to D (Drive) at any speed by pulling the lever rearward from the center position. It is not necessary to stop the vehicle or shift to N (Neutral) or P (Park) prior to shifting back to D (Drive).

Temporary Tap Shift Mode

To enter Temporary Tap Shift Mode:

1. With the transmission in D (Drive) and not in Permanent Tap Shift Mode, the Tap Shift controls will activate a Temporary Tap Shift Mode, allowing the transmission to be manually shifted. While in Temporary Tap Shift Mode, the D on the instrument cluster will be highlighted and the current gear shown.
2. To shift to the lowest available gear, press and hold the left control.
3. To deactivate, hold the right control briefly. Automatic shifts return after no manual shifts have been done for seven to 10 seconds.

While using Tap Shift, the vehicle will have firmer, quicker shifting. This can be used for sport driving or when climbing or descending hills, to stay in gear longer, or to downshift for more power or engine braking.

The transmission will only allow shifting into gears appropriate for the vehicle speed and engine revolutions per minute (rpm). If shifting is prevented for any reason, the M or D will flash in the instrument cluster. The transmission will not automatically shift to the next higher gear if the engine rpm is too high. It will only automatically shift to the next lower gear if the engine rpm is much too low.

Drive Systems

All-Wheel Drive

Vehicles with this feature always send engine power to all four wheels. It is fully automatic, and adjusts itself as needed for road conditions.

Brakes

Electric Brake Boost

Vehicles equipped with electric brake boost have hydraulic brake circuits that are electronically controlled when the brake pedal is applied during normal operation. The system performs routine tests and turns off within a few minutes after the vehicle is turned off. Noise may be heard during this time. If the brake pedal is pressed during the tests or when the electric brake boost system is off, a noticeable change in pedal force and travel may be felt. This is normal.

Antilock Brake System (ABS)

The Antilock Brake System (ABS) helps prevent a braking skid and maintain steering while braking hard.

If there is a problem with ABS, this warning light stays on. See *Antilock Brake System (ABS) Warning Light* ⇨ *100*.

ABS does not change the time needed to get a foot on the brake pedal and does not always decrease stopping distance. If you get too close to the vehicle ahead, there will not be enough time to apply the brakes if

that vehicle suddenly slows or stops. Always leave enough room ahead to stop, even with ABS.

Using ABS

Do not pump the brakes. Just hold the brake pedal down firmly. Hearing and feeling ABS operate is normal.

Braking in Emergencies

ABS allows steering and braking at the same time. In many emergencies, steering can help even more than braking.

Electric Parking Brake

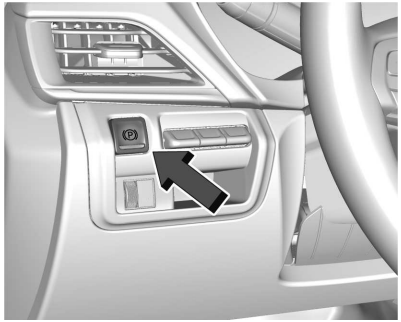

The Electric Parking Brake (EPB) can always be applied, even if the vehicle is off. In case of insufficient electrical power, the EPB cannot be applied or released. To prevent draining the battery, avoid unnecessary repeated cycles of the EPB.

The system has a red parking brake status light and an amber service parking brake warning light. See *Electric Parking Brake Light* ⇨ *100* and *Service Electric Parking Brake Light* ⇨ *100*. There are also parking brake-related Driver Information Center (DIC) messages.

Before leaving the vehicle, check the red parking brake status light to ensure that the parking brake is applied.

EPB Apply

To apply the EPB:

1. Be sure the vehicle is at a complete stop.
2. Press the EPB switch momentarily.

The red parking brake status light will flash and then stay on once the EPB is fully applied. If the red parking brake status light flashes continuously, then the EPB is only partially applied or there is a problem with the EPB. A DIC message will display. Release the EPB and try to apply it again. If the light does not come on, or keeps flashing, have the vehicle serviced. Do not drive the vehicle if the red parking brake status light is flashing. See your dealer.

If the amber service parking brake warning light is on, press the EPB switch. Continue to hold the switch until the red parking brake status light remains on. If the amber service parking brake warning light is on, see your dealer.

If the EPB is applied while the vehicle is moving, the vehicle will decelerate as long as the switch is pressed. If the switch is pressed until the vehicle comes to a stop, the EPB will remain applied.

The vehicle may automatically apply the EPB in some situations when the vehicle is not moving. This is normal, and is done to periodically check the

correct operation of the EPB system, or at the request of other safety functions that utilize the EPB.

If the EPB fails to apply, block the rear wheels to prevent vehicle movement.

EPB Release

To release the EPB:

1. Turn the ignition on or to ACC/ ACCESSORY.
2. Apply and hold the brake pedal.
3. Press the EPB switch momentarily.

The EPB is released when the red parking brake status light is off.

If the amber service parking brake warning light is on, release the EPB by pressing and holding the EPB switch. Continue to hold the switch until the red parking brake status light is off. If either light stays on after release is attempted, see your dealer.

Caution

Driving with the parking brake on can overheat the brake system and cause premature wear or damage to

(Continued)

Caution (Continued)

brake system parts. Make sure that the parking brake is fully released and the brake warning light is off before driving.

If you are towing a trailer and parking on a hill, see *Driving Characteristics and Towing Tips* ➪ *297*.

Automatic EPB Release

The EPB will automatically release if the vehicle is running, placed into gear, and an attempt is made to drive away. Avoid rapid acceleration when the EPB is applied, to preserve parking brake lining life.

Brake Assist

Brake Assist detects rapid brake pedal applications due to emergency braking situations and provides additional braking to activate the Antilock Brake System (ABS) if the brake pedal is not pushed hard enough to activate ABS normally. Minor noise, brake pedal pulsation, and/or pedal movement during this time may occur. Continue to apply the brake pedal as the driving situation dictates. Brake Assist disengages when the brake pedal is released.

Hill Start Assist (HSA)

⚠ Warning

Do not rely on the HSA feature. HSA does not replace the need to pay attention and drive safely. You may not hear or feel alerts or warnings provided by this system. Failure to use proper care when driving may result in injury, death, or vehicle damage. See *Defensive Driving* ➪ *204*.

When the vehicle is stopped on a grade, Hill Start Assist (HSA) temporarily prevents the vehicle from rolling in an unintended direction during the transition from brake pedal release to accelerator pedal apply. The brakes release when the accelerator pedal is applied or automatically release after a few seconds. The brakes may also release under other conditions. Do not rely on HSA to hold the vehicle.

HSA is available when the vehicle is facing uphill in a forward gear, or when facing downhill in R (Reverse). The vehicle must come to a complete stop on a grade for HSA to activate.

Automatic Vehicle Hold (AVH)

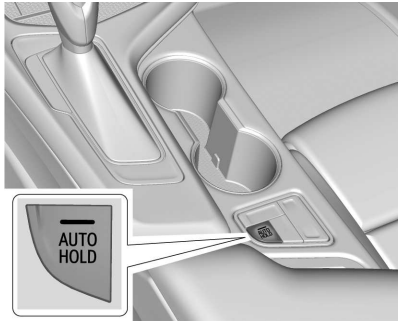

⚠ Warning

Do not rely on this feature. It does not replace the need to pay attention and drive safely. You may not hear or feel alerts or warnings

(Continued)

Warning (Continued)

provided by this system. Failure to use proper care when driving may result in injury, death, or vehicle damage.

When Automatic Vehicle Hold (AVH) is turned on and the vehicle is braked to a stop, AVH prevents the vehicle from moving during the transition from brake pedal release to accelerator pedal apply. The brakes release when the accelerator pedal is applied. The brakes may also release under other conditions. Do not rely on AVH to hold the vehicle.

If the accelerator pedal is not applied within a few minutes, the Electric Parking Brake will apply. The parking brake will also apply if the driver door is opened or the driver seat belt is unfastened while AVH is holding the vehicle.

AVH can be turned on by pressing AUTO HOLD. The indicator light on the switch will come on. The AVH light on the instrument panel will come on while AVH is actively holding the vehicle. See *Automatic Vehicle Hold (AVH) Light* ⇨ *101*.

Ride Control Systems

Traction Control/Electronic Stability Control

The vehicle has a Traction Control System (TCS) and StabiliTrak/ Electronic Stability Control (ESC). These systems help limit wheel slip and assist the driver in maintaining control, especially on slippery road conditions.

TCS activates if it senses that any of the drive wheels are spinning or beginning to lose traction. When this happens, the system brakes the spinning wheel(s) and/or reduces engine power to limit wheel spin.

StabiliTrak/ESC activates when the computer senses a difference between the intended path and the direction the vehicle is actually traveling. StabiliTrak/ESC selectively applies

braking pressure at any one of the vehicle's brakes to help steer the vehicle in the intended direction.

If cruise control is being used and TCS or StabiliTrak/ESC begins to limit wheel spin, cruise control will disengage. Cruise control may be turned back on when road conditions allow.

Both systems come on automatically when the vehicle is started and begins to move. The systems may be heard or felt while they are operating or while performing diagnostic checks. This is normal and does not mean there is a problem with the vehicle.

It is recommended to leave both systems on for normal driving conditions, but It may be necessary to turn TCS off if the vehicle gets stuck in sand, mud, ice, or snow. See *If the Vehicle Is Stuck* ⇨ *214* and "Turning the Systems Off and On" later in this section.

The indicator light for both systems is in the instrument cluster. This light will:

- Flash when TCS is limiting wheel spin.
- Flash when StabiliTrak/ESC is activated.
- Turn on and stay on when either system is not working.

If either system fails to turn on or to activate, a message may display in the Driver Information Center (DIC), and comes on and stays on to indicate that the system is inactive and is not assisting the driver in maintaining control. The vehicle is safe to drive, but driving should be adjusted accordingly.

If comes on and stays on:

1. Stop the vehicle.
2. Turn the engine off and wait 15 seconds.
3. Start the engine.

Drive the vehicle. if comes on and stays on, the vehicle may need more time to diagnose the problem. If the condition persists, see your dealer.

Turning the Systems Off and On

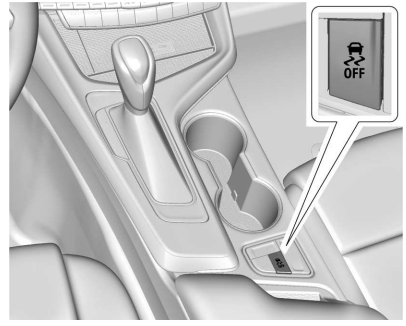

Caution

Do not repeatedly brake or accelerate heavily when TCS is off. The vehicle driveline could be damaged.

To turn off only TCS, press and release OFF. The traction off light displays in the instrument cluster. A DIC message may display.

To turn TCS on again, press and release OFF. The traction off light displayed in the instrument cluster will turn off.

If TCS is limiting wheel spin when OFF is pressed, the system will not turn off until the wheels stop spinning.

To turn off both TCS and StabiliTrak/ESC, press and hold OFF until the traction off light and StabiliTrak/ESC OFF light OFF come on and stay on in the instrument cluster. A DIC message may display.

To turn TCS and StabiliTrak/ESC on again, press and release OFF. The traction off light and StabiliTrak/ESC OFF light OFF in the instrument cluster turn off.

Adding accessories can affect the vehicle's performance. See *Accessories and Modifications* ⇨ *306*.

Driver Mode Control

Driver Mode Control (DMC) allows the driver to adjust the overall driving experience to better suit driver preference by adjusting vehicle systems to fit specific driving needs. Drive Mode availability and affected vehicle systems are dependent on vehicle trim level, region, and optional features.

If the vehicle is in Tour or My Mode, it will stay in that mode through future ignition cycles. If the vehicle is in any other mode, it will return to Tour Mode when the vehicle is restarted. When a mode is selected, an indicator will come on in the instrument cluster.

Mode Activation

Driver Mode Control Switch

To activate, press the MODE switch on the center console. Use the up and down arrows to move through the menu.

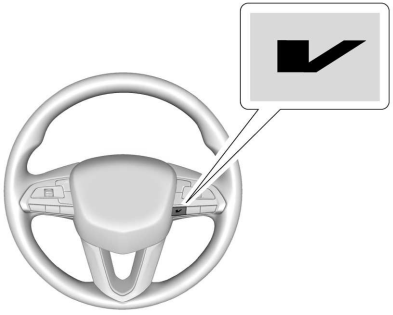

V-Mode Button

To activate V-Mode, press the V-Mode button on the steering wheel. To deactivate, select a different mode using the DMC switch, or press the V-Mode button on the steering wheel. When V-Mode is deactivated by the V-Mode button, DMC returns to Tour Mode.

Mode Description

Tour Mode

Use for normal city and highway driving to provide a smooth, soft ride. This mode provides a balance between comfort and handling. This is the standard mode. See “Mode Selection Attributes” later in this section. When Tour Mode is selected, no indicator will display.

Sport Mode

Use this mode where road conditions or personal preference demand a more controlled response. When this mode is selected, the vehicle immediately downshifts. The vehicle also monitors driving behaviors and automatically enables Performance Shift Features when spirited driving is detected. These features maintain lower transmission gears to increase available engine braking and improve acceleration response. The vehicle will exit this feature and return to normal operation after a short period when spirited driving is no longer detected. The steering changes to provide more precise control. If the vehicle has Magnetic Ride Control, the suspension changes to provide better cornering performance.

See “Mode Selection Attributes” later in this section.

Snow/Ice Mode

Use this mode for slippery surfaces to help control wheel speed. This mode can compromise the acceleration on dry asphalt.

This feature is not intended for use when the vehicle is stuck in sand, mud, or gravel. If the vehicle is stuck, see *If the Vehicle Is Stuck* ⇨ *214*.

See “Mode Selection Attributes” later in this section.

Track Mode (V-Series Only)

When in Track Mode, the automatic transmission and steering function similar to Sport Mode. The accelerator pedal is adjusted to give maximum control during the highest level of spirited driving. The Magnetic Ride Control will be set to the optimum level for vehicle responsiveness. Performance Traction Management (PTM) can be accessed through this mode. See “Performance Traction Management” in *Competitive Driving Mode* ⇨ *246*.

See “Mode Selection Attributes” later in this section.

My Mode

My Mode is used to personalize everyday driving. This mode is designed to allow the driver to configure vehicle systems to their own preference for city or normal driving.

Through the center stack, the following vehicle systems may be available for customization in this mode.

- Engine Sound: Stealth, Tour (Default), Sport, Track
- Steering: Tour (default), Sport, Track
- Suspension: Tour (default), Sport, Track
- Brake Response: Tour (default), Sport, Track

For information on the range of settings, see “Driver Mode Customization”.

V-Mode (V-Series Only)

V-Mode is used to personalize dynamic driving. This mode is designed to allow the driver to configure vehicle sub-systems to their own preference for maximum handling. V-Mode further enhances the drivers experience by adding a powertrain customization. Through the center stack, the following vehicle systems may be available for customization in this mode.

- Engine Sound: Stealth, Tour, Sport (default), Track
- Steering: Tour, Sport (default), Track
- Suspension: Tour, Sport, (default), Track
- Powertrain: Tour, Sport, (default), Track, Snow/Ice
- PTM: OFF, WET, DRY, SPORT, RACE 1, RACE 2
- Brake Response: Tour, Sport, Track

For information on the range of settings, see “Driver Mode Customization”.

Mode Selection Attributes

Modes:	TOUR *Default*	SPORT	TRACK	SNOW/ICE
Powertrain	Tour	Tour	Track	Snow/Ice
Throttle Progression	Tour	Tour	Track	Snow/Ice
Transmission Shift Mode	Tour	Sport	Track	Tour
Engine Sound	Tour	Sport	Track	Tour
Steering	Tour	Sport	Track	Tour
Suspension (if equipped with Magnetic Ride Control)	Tour	Sport	Track	Tour
Traction and Stability Control	Tour	Tour	Track	Tour
Competitive Driving Mode (if equipped)	Not Available	Available	Not Available	Not Available
Performance Traction Mode (if equipped)	Not Available	Not Available	Available	Not Available
Brake Response	Tour	Sport	Track	Tour

Throttle Progression

Adjusts throttle sensitivity by selecting how quick or slow the throttle reacts to input.

- Snow/Ice - The accelerator pedal reduces engine torque at small pedal inputs. This allows better wheel control on slippery surfaces.
- Track - The accelerator pedal adjusts to give maximum control during the highest level of spirited driving.

Transmission Shift Mode

Sport or Track – Dynamic Performance Mode (DPM) allows the transmission to hold the current gear after a quick release of a heavily applied accelerator pedal. This provides greater engine braking and enhanced vehicle control without using the paddles. DPM recognizes aggressive cornering, heavy braking, and high acceleration to select and

hold lower gears when not using paddles. The shifts are also firmer to increase the quickness of shifting.

Engine Sound

Adjusts the volume of engine noise.

The sound level changes when the variable exhaust valves open.

Steering (Assist Effort)

Adjusts from a lighter steering feel in Tour Mode to reduced assist in Sport and Track Mode for more steering feel.

Magnetic Ride Control (If Equipped)

Adjusts the shock dampening firmness from a comfort in Tour Mode to an optimized responsiveness tune in Sport and Track.

Stability Control

- Competitive Mode allows less computer control to permit some slide and drift and is selected with the TCS/StabiliTrak button – only available in Sport Mode.
- StabiliTrak/Electronic Stability Control (ESC) can be turned off by pressing and holding the TCS/ StabiliTrak button for five seconds.

Brake Response

Adjusts brake pedal sensitivity by selecting how quick or slow the brakes respond to input.

Driver Mode Customization

The following settings can be changed using the Driver Mode Customization Menu. See “Settings>Vehicle>Drive Mode Customization” in the center stack to customize My Mode or V-Mode.

Engine Sound

Engine sound adjusts the volume of engine noise. The settings range from quietest to loudest volume from Stealth through Track.

–Stealth, Tour, Sport, Track

Steering

Steering adjusts the effort required to turn the steering wheel. The steering wheel offers better feedback in the Tour setting, but requires more effort in the Sport and Track settings.

–Tour, Sport, Track

Suspension

Suspension adjusts the firmness of the suspension in the vehicle. Suspension adjusts the stiffness of the shocks and / or springs. The ride is more comfortable at lower settings and is stiffer at higher settings for better control.

–Tour, Sport, Track

Powertrain

Powertrain adjusts the throttle response, gear shifting and engine performance. Throttle response increases in the Sport, Track, and Snow/Ice settings, and gear shifting is more aggressive.

–Tour, Sport, Track, Snow/Ice

Brake Response

Brake Response adjusts the brake pedal response. Settings range from a slower response for more comfortable driving to the quickest response for quicker deceleration. Brake pedal travel decreases and caliper pressure increases in the Sport and Track settings.

–Tour, Sport, Track

PTM (Performance Traction Management)

PTM controls vehicle performance systems for professional handling on race tracks. Traction Control and Stability Control are reduced as you move through each of the settings. Changing PTM settings may also automatically change the other subsystem settings. See “Performance Traction Management” in *Competitive Driving Mode* ⇨ *246*

–Off, Wet, Dry, Sport, Race 1, Race 2

Competitive Driving Mode

To select this optional handling mode, press quickly two times and the DIC will display COMPETITIVE MODE ON. While in the Competitive Driving Mode, the traction off light and StabiliTrak/ESC OFF light will come on in the instrument cluster. TCS does not limit wheel spin, the Electronic Limited-Slip Differential (eLSD) allows increased vehicle agility, and more effort is required to turn the steering wheel. See “Limited-Slip Differential (V–Series Only)” later in this section. Adjust your driving accordingly.

Press again, or turn the ignition to ACC/ACCESSORY and restart the vehicle, to turn TCS back on. The traction off light and StabiliTrak/ESC OFF light will go out in the instrument cluster.

Caution

When traction control is turned off, or Competitive Driving Mode is active, it is possible to lose traction.

Performance Traction Management (PTM)

PTM can be activated through V-Mode customization or by pressing the ESC button twice while in Track Mode.

To activate PTM through V-Mode customization, select the desired PTM state in the center stack (Vehicle>Settings>Drive Mode Customization>V-Mode). Press the V-Mode button once to activate V-Mode. When PTM is configured on, a message will appear in the Driver Information Center (DIC) “V-Mode Active - Press Again for PTM On - ESC May be Disabled”.

To confirm and enter PTM, press the V-Mode button again. The PTM state can now be modified using the mode knob or changing the V-Mode PTM settings in the center stack. Both the V–Mode and PTM indicators will be displayed. To exit PTM, press the ESC button.

To cancel the PTM request message and not enter PTM, press the center dismiss button on the steering wheel (V–Mode remains active).

Selecting PTM states may modify other V-Mode customization options.

Off, Wet, Dry, Sport, Race 1, Race 2.

PTM 1 – WET

- Intended for all driver skill levels.
- Wet or damp conditions only — not intended for use in heavy rain or standing water.
- StabiliTrak/ESC is on and engine power is reduced based on conditions.

PTM 2 – DRY

- For use by less experienced drivers or while learning a new track.
- Dry conditions only.
- StabiliTrak/ESC is on and engine power is slightly reduced.

PTM 3 – SPORT

- For use by drivers who are familiar with the track.
- Dry conditions only.
- Requires more driving skill than mode 2.
- StabiliTrak/ESC is on and more engine power is available than in mode 2.

PTM 4 – RACE 1

- For use by drivers who are familiar with the track.
- Dry conditions only.
- Requires more driving skill than modes 2 or 3.
- StabiliTrak/ESC is off and available engine power is the same as mode 3.

PTM 5 – RACE 2

- For use by experienced drivers who are familiar with the track.
- Dry conditions only.
- Requires more driving skill than in other modes.
- StabiliTrak/ESC is off and engine power is available for maximum cornering speed.

Press and release OFF to turn off PTM and return to the TCS and StabiliTrak/ESC systems. The traction off light and StabiliTrak Off light will go out.

Launch Control

If equipped, Launch Control is available within Competitive Driving Mode and Performance Traction Management (PTM) to allow high levels of vehicle acceleration in a straight line. Launch Control is a form of traction control that manages tire spin while launching the vehicle. This feature is intended for use during closed course race events where consistent zero to 60 and quarter mile times are desirable.

Launch Control is only available when the following criteria are met:

- Competitive Driving Mode is selected or any of the Performance Traction Management modes are selected. The traction off light comes on in the instrument cluster and the appropriate Driver Information Center (DIC) message displays.
- The vehicle is not moving.
- The steering wheel is pointing straight.

Automatic Transmissions

- The brake pedal is firmly pressed to the floor, equivalent to a panic brake event.
- The accelerator pedal is rapidly applied to wide open throttle. If the vehicle rolls due to wide open throttle, release the throttle, press the brake pedal more firmly, and re-apply the accelerator to wide open throttle.

Launch Control will initially limit engine speed as you rapidly apply the accelerator pedal to wide open throttle. Allow the engine rpm to stabilize. A smooth, quick release of the brake pedal, while maintaining the fully pressed accelerator pedal, will manage wheel slip.

After the vehicle is launched, the system continues in Competitive Driving Mode or PTM.

Competitive Driving Mode, PTM, and Launch Control are systems designed for a closed course race track and not intended for public roads. The systems are not intended to compensate for lack of driver experience or familiarity with the race track.

Limited-Slip Differential

If equipped, the Electronic Limited-Slip Differential (eLSD) is automatically activated. eLSD actively monitors vehicle sensors and driver inputs to determine the amount of change for the conditions. With eLSD, the vehicle has:

- Enhanced high-speed control.
- Improved traction through corners, allowing more acceleration.
- More precise steering.
- Increased vehicle agility.
- Integration with StabiliTrak/ Electronic Stability Control (ESC).

For vehicles with eLSD, driven under severe conditions, the rear axle fluid should be changed. See *Competitive Driving Mode* ➪ *246* and *Maintenance Schedule* ➪ *380*.

Cruise Control

⚠ Warning

Cruise control can be dangerous where you cannot drive safely at a steady speed. Do not use cruise control on winding roads or in heavy traffic.

Cruise control can be dangerous on slippery roads. On such roads, fast changes in tire traction can cause excessive wheel slip, and you could lose control. Do not use cruise control on slippery roads.

With cruise control, a speed of about 40 km/h (25 mph) or more can be maintained without keeping your foot on the accelerator. Cruise control does not work at speeds below about 40 km/h (25 mph).

If the Traction Control/StabiliTrak/ Electronic Stability Control (ESC) system begins to limit wheel spin while using cruise control, the cruise control automatically disengages. See *Traction Control/Electronic Stability Control* ➪ *239*. If a collision alert

occurs when cruise control is activated, cruise control is disengaged. See *Forward Collision Alert (FCA) System* ⇨ *283*. When road conditions allow cruise control to be safely used, it can be turned back on.

Cruise control will disengage if either TCS or StabiliTrak/ESC is turned off.

If the brakes are applied, cruise control disengages.

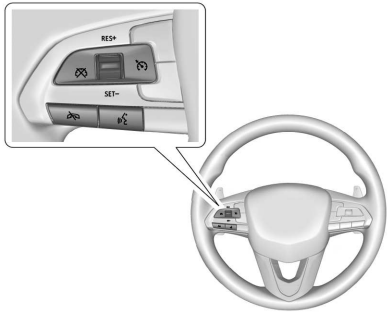

: Press to turn the system on and off. A white indicator appears in the instrument cluster when cruise is turned on.

RES+ : If there is a set speed in memory, press briefly to resume to that speed or press and hold to accelerate. If the cruise control is already active, use to increase vehicle speed. To increase speed by 1 km/h (1 mph), press RES+ to the first detent. To increase speed to the next 5 km/h (5 mph) mark on the speedometer, press RES+ to the second detent.

SET– : Press briefly to set the speed and activate cruise control. If the cruise control is already active, use to decrease vehicle speed. To decrease speed by 1 km/h (1 mph), press SET– to the first detent. To decrease speed to the next 5 km/h (5 mph) mark on the speedometer, press SET– to the second detent.

: Press to disengage cruise control without erasing the set speed from memory.

Setting Cruise Control

If is on when not in use, SET– or RES+ could get pressed and go into cruise when not desired. Keep off when cruise is not being used.

1. Press .
2. Get up to the desired speed.
3. Press and release SET–. The desired set speed briefly appears in the instrument cluster.
4. Remove your foot from the accelerator.

When the cruise control has been set to the desired speed, a green cruise control indicator appears on the instrument cluster and a cruise set speed message appears on the Head-Up Display (HUD), if equipped.

Resuming a Set Speed

If the cruise control is set at a desired speed and then the brakes are applied or is pressed, the cruise control is disengaged without erasing the set speed from memory.

Once the vehicle speed reaches about 40 km/h (25 mph) or more, press RES+ briefly. The vehicle returns to the previous set speed.

Increasing Speed While Using Cruise Control

If the cruise control system is already activated:

- Press and hold RES+ until the desired speed is reached, then release it.
- To increase vehicle speed in small increments, briefly press RES+ to the first detent. For each press, the vehicle goes about 1 km/h (1 mph) faster.
- To increase vehicle speed in larger increments, briefly press RES+ to the second detent. For each press, the vehicle speed increases to the next 5 km/h (5 mph) mark on the speedometer.

The speedometer reading can be displayed in either English or metric units. See *Instrument Cluster (Base Level)* ⇨ *88* or *Instrument Cluster (Uplevel)* ⇨ *90*. The increment value used depends on the units displayed.

Reducing Speed While Using Cruise Control

If the cruise control system is already activated:

- Press and hold SET– until the desired lower speed is reached, then release it.
- To decrease the vehicle speed in small increments, briefly press SET– to the first detent. For each press, the vehicle goes about 1 km/h (1 mph) slower.
- To decrease the vehicle speed in larger increments, briefly press SET– to the second detent. For each press, the vehicle speed decreases to the next 5 km/h (5 mph) mark on the speedometer.

The cruise control system may automatically brake to slow the vehicle down.

The speedometer reading can be displayed in either English or metric units. See *Instrument Cluster (Base Level)* ⇨ *88* or *Instrument Cluster (Uplevel)* ⇨ *90*. The increment value used depends on the units displayed.

Passing Another Vehicle While Using Cruise Control

Use the accelerator pedal to increase the vehicle speed. When you take your foot off the pedal, the vehicle will slow down to the previous set cruise speed.

While pressing the accelerator pedal or shortly following the release to override cruise, briefly applying SET– will result in cruise set to the current vehicle speed.

Using Cruise Control on Hills

How well the cruise control will work on hills depends upon the vehicle speed, load, and the steepness of the hills. When going up steep hills, you might have to step on the accelerator pedal to maintain your speed. When going downhill, the cruise control system may automatically brake to slow the vehicle down. Also, you may have to brake or shift to a lower gear to keep your speed down. If the brake pedal is applied, cruise control disengages.

Ending Cruise Control

There are four ways to end cruise control:

- Step lightly on the brake pedal.
- Press .
- Shift the transmission to N (Neutral).
- Press .

Erasing Speed Memory

The cruise control set speed is erased from memory if is pressed or if the ignition is turned off.

Adaptive Cruise Control (Advanced)

If equipped, Adaptive Cruise Control (ACC) allows the cruise control set speed and following gap to be selected. Read this entire section before using this system. The following gap is the following time between your vehicle and a vehicle detected directly ahead in your path, moving in the same direction. If no vehicle is detected in your path, ACC works like regular cruise control. ACC uses camera and radar sensors. See *Radio Frequency Statement* ⇨ *409*.

If a vehicle is detected in your path, ACC can speed up the vehicle or apply limited, moderate braking to maintain the selected following gap. To disengage ACC, apply the brake. If the Traction Control System (TCS) or StabiliTrak/Electronic Stability Control (ESC) system activates while ACC is engaged, ACC may automatically disengage. See *Traction Control/ Electronic Stability Control* ⇨ *239*. When road conditions allow ACC to be safely used, ACC can be turned back on. ACC will not engage if the TCS or StabiliTrak/ESC electronic stability control system is disabled.

ACC can reduce the need for you to frequently brake and accelerate, especially when used on expressways, freeways, and interstate highways. When used on other roads, you may need to take over the control of braking or acceleration more often.

⚠ Warning

ACC has limited braking ability and may not have time to slow the vehicle down enough to avoid a collision with another vehicle you are following. This can occur when vehicles suddenly slow or stop ahead, or enter your lane. Also see “Alerting the Driver” in this section. Complete attention is always required while driving and you should be ready to take action and apply the brakes. See *Defensive Driving* ⇨ *204*.

⚠ Warning

ACC will not detect or brake for children, pedestrians, animals, or other objects.

Do not use ACC when:

- On winding and hilly roads or when the sensors are blocked by snow, ice, or dirt. The system

(Continued)

Warning (Continued)

may not detect a vehicle ahead. Keep the entire front of the vehicle clean.

- Visibility is low, such as in fog, rain, or snow conditions. ACC performance is limited under these conditions.
- On slippery roads where fast changes in tire traction can cause excessive wheel slip.

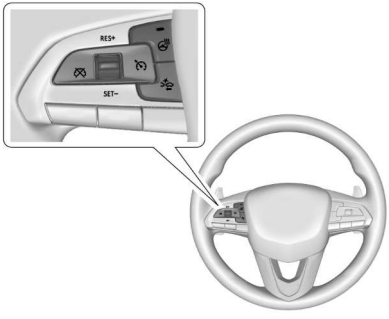

: Press to turn the system on or off. The indicator turns white on the instrument cluster when ACC is turned on.

RES+ : Press briefly to resume the previous set speed or to increase vehicle speed if ACC is already engaged. To increase speed by 1 km/h (1 mph), press RES+ to the first detent. To increase speed to the next 5 km/h (5 mph) mark on the speedometer, press RES+ to the second detent.

SET– : Press briefly to set the speed and activate ACC or to decrease vehicle speed if ACC is already engaged. To decrease speed by 1 km/h (1 mph), press SET– to the first detent. To decrease speed to the next 5 km/h (5 mph) mark on the speedometer, press SET– to the second detent.

: Press to disengage ACC without erasing the selected set speed.

: Press to select a following gap time (or distance) setting for ACC of Far, Medium, or Near.

The speedometer reading can be displayed in either English or metric units. See *Instrument Cluster (Base Level)* ⇨ *88* or *Instrument Cluster (Uplevel)* ⇨ *90*. The increment value used depends on the units displayed.

Switching Between ACC and Regular Cruise Control

To switch between ACC and regular cruise control, press and hold .
A Driver Information Display (DIC) message displays. See *Vehicle Messages* ⇨ *116*.

ACC Indicator

Regular Cruise Control Indicator

When ACC is engaged, a green indicator will be lit on the instrument cluster. When the regular cruise control is engaged, a green indicator will be lit on the instrument cluster and the following gap will not display.

When the vehicle is turned on, the cruise control mode will be set to the last mode used before the vehicle was turned off.

⚠ Warning

Always check the cruise control indicator on the instrument cluster to determine which mode cruise control is in before using the feature. If ACC is not active, the vehicle will not automatically brake for other vehicles, which could cause a crash if the brakes are not applied manually. You and others could be seriously injured or killed.

Setting Adaptive Cruise Control

If is on when not in use, SET-/RES+ could be pressed by mistake and activate ACC when not desired. Keep off when cruise is not being used.

Select the set speed desired for ACC. This is the vehicle speed when no vehicle is detected in its path.

While the vehicle is moving, ACC will not set at a speed below a minimum speed, although it can be resumed. If equipped with Super Cruise, this minimum speed is 5 km/h (3 mph), otherwise, it is 25 km/h (15 mph). The minimum allowable set speed is 25 km/h (15 mph).

To set ACC while moving:

1. Press .
2. Get up to the desired speed.
3. Press and release SET–.
4. Remove your foot from the accelerator.

After ACC is set, it may immediately apply the brakes if a vehicle ahead is detected closer than the selected following gap.

ACC can also be set while the vehicle is stopped if ACC is on and the brake pedal is applied.

The ACC indicator displays on the instrument cluster and Head-Up Display (HUD), if equipped. When ACC is turned on, the indicator will be lit white. When ACC is engaged, the indicator will turn green.

Be mindful of speed limits, surrounding traffic speeds, and weather conditions when selecting the set speed.

Resuming a Set Speed

If ACC is set at a desired speed and then the brakes are applied, ACC is disengaged without erasing the set speed from memory.

To begin using ACC again, press RES+ up briefly while moving more than 5 kph (5 mph). The vehicle returns to the previous set speed.

If the vehicle is stopped with the brake pedal applied, press RES+ and release the brake pedal. ACC will hold the vehicle until RES+ or the accelerator pedal is pressed.

A green ACC indicator and the set speed display on the instrument cluster. The vehicle ahead indicator may be flashing if a vehicle ahead was present and moved. See “Approaching and Following a Vehicle” later in this section.

Once ACC has resumed, if there is no vehicle ahead, if the vehicle ahead is beyond the selected following gap, or if the vehicle has exited a sharp curve, then the vehicle speed will increase to the set speed.

Increasing Speed While ACC Is at a Set Speed

If ACC is already activated, do one of the following:

- Use the accelerator to get to the higher speed. Press SET– . Release the control and the accelerator pedal. The vehicle will now cruise at the higher speed.

  When the accelerator pedal is pressed, ACC will not brake because it is overridden. The ACC indicator will turn blue on the instrument panel and heads up display, if equipped
- Press and hold RES+ until the desired set speed is displayed, then release it.
- To increase speed in smaller increments, press RES+ to the first detent. For each press, the vehicle goes 1 km/h (1 mph) faster.
- To increase speed in larger increments, press RES+ to the second detent. For each press, the vehicle speed increases to the next 5 km/h (5 mph) mark on the speedometer.

The set speed can also be increased while the vehicle is stopped.

- If stopped with the brake applied, press RES+ until the desired set speed is displayed.
- If ACC is holding the vehicle at a stop and there is another vehicle directly ahead, pressing RES+ will increase the set speed.
- Pressing RES+ when there is no longer a vehicle ahead or the vehicle ahead is pulling away and the brake is not applied will cause the ACC to resume.

When it is determined there is no vehicle ahead or the vehicle ahead is beyond the selected following gap, then the vehicle speed will increase to the set speed.

The speedometer reading can be displayed in either English or metric units. See *Instrument Cluster (Base Level)* ⇨ *88* or *Instrument Cluster (Uplevel)* ⇨ *90*. The increment value used depends on the units displayed.

Reducing Speed While ACC Is at a Set Speed

If ACC is already activated, do one of the following:

- Use the brake to get to the desired lower speed. Release the brake and press SET–. The vehicle will now cruise at the lower speed.
- Press and hold SET– until the desired lower speed is displayed, then release it.
- To decrease speed in smaller increments, press SET– to the first detent. For each press, the vehicle goes about 1 km/h (1 mph) slower.
- To decrease speed in larger increments, press or hold SET– to the second detent. For each press, the vehicle speed decreases to the next 5 km/h (5 mph) mark on the speedometer.

  The set speed can also be decreased while the vehicle is stopped.
- To decrease speed while the vehicle is stopped, press SET– until the desired set speed is displayed.

Selecting the Follow Distance Gap

When a slower moving vehicle is detected ahead within the selected following gap, ACC will adjust the vehicle's speed and attempt to maintain the follow distance gap selected.

Press on the steering wheel to adjust the following gap. Each press cycles the gap button through three settings: Far, Medium, or Near.

When pressed, the current gap setting displays briefly on the instrument cluster and the HUD (if equipped). Subsequent presses cycle the gap button through three settings: Far, Medium, or Near. The gap setting will be maintained until it is changed.

Since each gap setting corresponds to a following time (Far, Medium, or Near), the following distance will vary based on vehicle speed. The faster the vehicle speed, the further back your vehicle will follow a vehicle detected ahead. Consider traffic and weather conditions when selecting the following gap. The range of selectable gaps may not be appropriate for all drivers and driving conditions.

Changing the gap setting automatically changes the alert timing sensitivity (Far, Medium, or Near) for the Forward Collision Alert (FCA) feature. See *Forward Collision Alert (FCA) System* ⇨ *283*.

Courtesy Gap (If Equipped with Super Cruise)

Press and Hold on the steering wheel when vehicle is moving to temporarily increase the gap with the vehicle ahead to allow for merging traffic.

Press and Hold when stopped to cancel ACC from resuming automatically (if the stop is brief) and remain stationary. This can be used to allow traffic to merge between you and the vehicle ahead.

Press RES+ or the accelerator pedal to resume ACC. Following distance gap will return to the original selection after hold.

Alerting the Driver

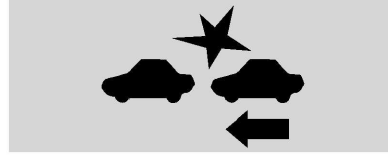

If ACC is engaged, driver action may be required when ACC cannot apply sufficient braking because of approaching a vehicle too rapidly.

When this condition occurs, the collision alert symbol will flash on the windshield. Either eight beeps will sound from the front, or both sides of the Safety Alert Seat will pulse five times. See “Collision/Detection Systems” under *Vehicle Personalization* ⇨ *117*.

See *Defensive Driving* ⇨ *204*.

Approaching and Following a Vehicle

The vehicle ahead indicator is in the instrument cluster and HUD display, if equipped.

The vehicle ahead indicator only displays when a vehicle is detected in your vehicle's path moving in the same direction.

If this symbol is not displaying, ACC will not respond to or brake to vehicles ahead.

ACC automatically slows the vehicle down and adjusts vehicle speed to follow a detected vehicle ahead at the selected follow gap. The vehicle speed increases or decreases to follow a detected vehicle in front of your vehicle when that vehicle is traveling slower than your vehicle set speed. It may apply limited braking, if necessary. When braking is active, the brake lamps will come on. The automatic braking may feel or sound different than if the brakes were applied manually. This is normal.

Passing a Vehicle While Using ACC

If the set speed is high enough, and the left turn signal is used to pass a vehicle ahead in the selected following gap, ACC may assist by gradually accelerating the vehicle prior to the lane change.

⚠ Warning

When using ACC to pass a vehicle or perform a lane change, the following distance to the vehicle being passed may be reduced. ACC may not apply sufficient acceleration or braking when passing a vehicle or performing a lane change. Always be ready to manually accelerate or brake to complete the pass or lane change.

Stationary or Very Slow-Moving Objects

⚠ Warning

ACC may not detect and react to stopped or slow-moving vehicles ahead of you. For example, the system may not brake for a vehicle it has never detected moving. This can occur in stop-and-go traffic or when a vehicle suddenly appears due to a vehicle ahead changing lanes. Your vehicle may not stop and could cause a crash. Use caution when using ACC. Your complete attention is always required while driving and you should be ready to take action and apply the brakes.

Irregular Objects Affecting ACC

ACC may have difficulty detecting the following objects:

- Vehicles with cargo extending from the back end.
- Non-standard shaped vehicles, such as vehicle transport, vehicles with a side car fitted, or horse carriages.

- Objects that are close to the front of your vehicle.

ACC Automatically Disengages

ACC may automatically disengage and you will need to manually apply the brakes to slow the vehicle when:

- The sensors are blocked.
- The Traction Control System (TCS) or StabiliTrak/ESC system has activated or been disabled.
- There is a fault in the system.
- The radar falsely reports blockage when driving in a desert or remote area with no other vehicles or roadside objects. A DIC message may display to indicate that ACC is temporarily unavailable.

The ACC indicator will turn white when ACC is no longer active.

In some cases, when ACC will not activate, regular Cruise Control may be used. See “Switching Between ACC and Regular Cruise Control” previously in this section. Always consider driving conditions before using either cruise control system.

Notification to Resume ACC

ACC will maintain a follow gap behind a detected vehicle and slow your vehicle to a stop behind that vehicle.

If the stopped vehicle ahead has driven away and ACC has not resumed, the vehicle ahead indicator will flash as a reminder to check traffic ahead before proceeding. In addition, the left and right sides of the Safety Alert Seat will pulse three times, or three beeps will sound. See “Alert Type” and “Adaptive Cruise Go Notifier” in “Collision/Detection Systems” under *Vehicle Personalization* ⇨ *117*.

When the vehicle ahead drives away, ACC resumes automatically if the stop was brief. If necessary, press RES+ or the accelerator pedal to resume ACC. If stopped for more than two minutes or if the driver door is opened and the driver seat belt is unbuckled, the ACC automatically applies the Electric Parking Brake (EPB) to hold the vehicle. The EPB status light will turn on. See *Electric Parking Brake* ⇨ *237*. To release the EPB, press the accelerator pedal.

A DIC warning message may display indicating to shift to P (Park) before exiting the vehicle.

⚠ Warning

If ACC has stopped the vehicle, and if ACC is disengaged, turned off, or canceled, the vehicle will no longer be held at a stop. The vehicle can move. When ACC is holding the vehicle at a stop, always be prepared to manually apply the brakes.

⚠ Warning

Leaving the vehicle without placing it in P (Park) can be dangerous. Do not leave the vehicle while it is being held at a stop by ACC. Always place the vehicle in P (Park) and turn off the ignition before leaving the vehicle.

ACC Override

If using the accelerator pedal while ACC is active, the ACC indicator turns blue on the instrument cluster and in

the HUD (if equipped) to indicate that automatic braking will not occur. ACC will resume operation when the accelerator pedal is not being pressed.

⚠ Warning

The ACC will not automatically apply the brakes if your foot is resting on the accelerator pedal. You could crash into a vehicle ahead of you.

Curves in the Road

⚠ Warning

On curves, ACC may not detect a vehicle ahead in your lane. You could be startled if the vehicle accelerates up to the set speed, especially when following a vehicle exiting or entering exit ramps. You could lose control of the vehicle or crash. Do not use ACC while driving on an entrance or exit ramp. Always be ready to use the brakes if necessary.

⚠ Warning

On curves, ACC may respond to a vehicle in another lane, or may not have time to react to a vehicle in your lane. You could crash into a vehicle ahead of you, or lose control of your vehicle. Give extra attention in curves and be ready to use the brakes if necessary. Select an appropriate speed while driving in curves.

ACC may operate differently in a sharp curve. It may reduce the vehicle speed if the curve is too sharp.

If equipped, the curve speed control indicator may illuminate green when ACC is actively controlling the vehicle speed and detects a sharp curve on the road ahead.

ACC automatically slows the vehicle down while navigating the curve and may increase speed out of the curve, but will not exceed the set speed.

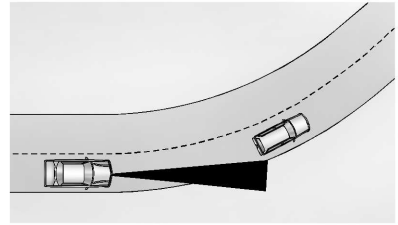

When following a vehicle and entering a curve, ACC may not detect the vehicle ahead and accelerate to the set speed. When this happens, the vehicle ahead indicator will not appear.

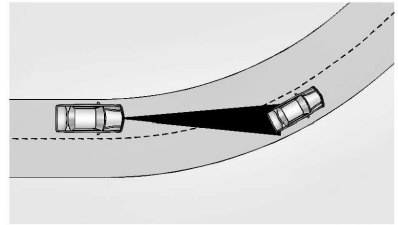

ACC may detect a vehicle that is not in your lane and apply the brakes.

ACC may occasionally provide an alert and/or braking that is considered unnecessary. It could respond to vehicles in different lanes, signs,

guardrails, and other stationary objects when entering or exiting a curve. This is normal operation. The vehicle does not need service.

Other Vehicle Lane Changes

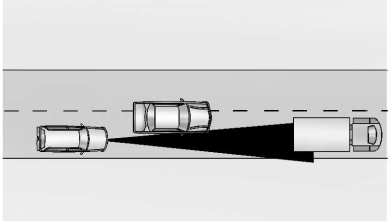

ACC will not detect a vehicle ahead until it is completely in the lane. The brakes may need to be manually applied.

Objects Not Directly in Front of Your Vehicle

The detection of objects in front of the vehicle may not be possible if:

- The vehicle or object ahead is not within your lane.
- The vehicle ahead is shifted, not centered, or is shifted to one side of the lane.

Driving in Narrow Lanes

Vehicles in adjacent traffic lanes or roadside objects may be incorrectly detected when located along the roadway.

Do Not Use ACC on Hills and When Towing a Trailer

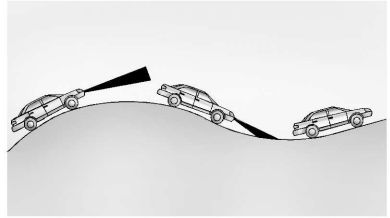

Do not use ACC when driving on steep hills or when towing a trailer. ACC will not detect a vehicle in the lane while driving on steep hills. If the brakes are applied, ACC disengages.

Disengaging ACC

There are three ways to disengage ACC:

- Step lightly on the brake pedal.
- Press .
- Press .

Erasing Speed Memory

The ACC set speed is erased from memory if is pressed or if the ignition is turned off.

Weather Conditions Affecting ACC

System operation may be limited under snow, heavy rain, or road spray conditions.

Accessory Installations and Vehicle Modifications

Do not install or place any object around the front camera windshield area that would obstruct the front camera view.

Do not install objects on top of the vehicle that overhang and obstruct the front camera, such as a canoe, kayak, or other items.

Do not modify the hood, headlamps, or fog lamps, as this may limit the camera's ability to detect an object.

Cleaning the Sensing System

The camera sensor on the windshield behind the rearview mirror and the radar sensors on the front of the vehicle can become blocked by snow,

ice, dirt, or mud. These areas need to be cleaned for ACC to operate properly.

If ACC will not operate, regular Cruise Control may be available. See "Switching Between ACC and Regular Cruise Control" previously in this section. Always consider driving conditions before using either cruise control system.

For cleaning instructions, see "Washing the Vehicle" under *Exterior Care* ⇨ *370*.

System operation may also be limited under snow, heavy rain, or road spray conditions.

Super Cruise

If equipped, Super Cruise can steer to maintain lane position under certain conditions on Super Cruise-enabled roads that are separated from opposing traffic.

Super Cruise can also steer to perform a lane change under certain conditions on Super Cruise-enabled roads when a lane change is initiated by the driver using the turn signal lever. See "Super Cruise Lane Change" later in this section and *Turn and Lane-Change Signals* ⇨ *129*.

⚠ Warning

Super Cruise can only assist to maintain lane position, or steer to change lanes, when driving on compatible roads. You must supervise the driving task and monitor the road conditions. You may need to respond to traffic events by steering, braking, or accelerating. See Defensive Driving.

Super Cruise is:

- Not a self-driving system
- Not a crash avoidance or warning system
- Not a substitute for proper supervision of the driving task.

Super Cruise uses the following to detect the current lane position and lane markings ahead on compatible roads under certain conditions:

- Cameras
- Global Positioning System (GPS) sensing
- A high-precision map
- GPS-enhancement data downloaded through Connected Services

Super Cruise works with Adaptive Cruise Control (ACC), which controls acceleration and braking while Super Cruise is enabled and operating. Review and understand both this section and the ACC section before using Super Cruise. See *Adaptive Cruise Control (Advanced)* ⇨ *251*.

An active Super Cruise service plan is required to use Super Cruise.

⚠ Warning

Super Cruise does not perform all aspects of driving, nor does it do everything a driver can do. Super Cruise only steers to maintain vehicle position in the current lane or, under some circumstances, to change lanes. Super Cruise can only be used with Adaptive Cruise Control.

(Continued)

Warning (Continued)

Super Cruise does:

- Not prevent crashes or warn of possible crashes.
- Not steer to avoid stopped or slow-moving vehicles, cross-traffic, construction barriers or cones, motorcycles, children, pedestrians, animals, or other objects on the road.
- Not steer in response to vehicles or objects next to your vehicle, including vehicles attempting to enter your lane.
- Not respond to traffic lights, stop signs, or other traffic control devices.
- Not respond to crossing traffic.
- Not make turns.
- Not steer to merge onto or to exit highways.
- Not detect, steer to avoid, or steer through construction zones.
- Not function on surface streets.

(Continued)

Warning (Continued)

- Not respond to crossing or oncoming traffic.
- Not function in city driving conditions.

⚠ Warning

Some state and local laws may require hands to be kept on the steering wheel at all times. Only remove your hands from the steering wheel if Super Cruise is engaged, it is safe to do so, and it is permitted by state and local laws. Failure to do so may result in a crash involving serious injury or death.

⚠ Warning

Failure to supervise the driving task and to respond appropriately, even while Super Cruise is operating, can cause a crash. Super Cruise may not

(Continued)

Warning (Continued)

respond as you would to all driving situations and may not maintain lane position under all conditions.

It is extremely important to pay attention to the operation of the vehicle, even while using Super Cruise. Do not use a hand-held device while driving, even with Super Cruise engaged. To prevent serious injury or death:

- Always remain properly seated in the driver seat with your seat belt fastened.
- Never remove your hands from the steering wheel when Super Cruise is not operating.
- Always make sure traffic conditions are safe before using Super Cruise.
- Always keep the entire vehicle and the sensors clean. Sensors are on the front, sides, and rear of the vehicle.

(Continued)

Warning (Continued)

- Always observe posted speed limits. Only use Super Cruise at or below the posted speed limit.

Super Cruise should not be used in complex or uncertain driving conditions, including:

- Not in construction zones.
- Not when approaching or exiting toll plazas.
- Not when approaching an intersection that is controlled with a traffic light, stop sign, or other traffic control device.
- Not when lane markings are not present or cannot be detected. For example, there is too much glare, weather conditions are poor, or lanes are poorly marked.
- Not on slippery or icy roads.
- Not in adverse weather conditions, including rain, sleet, fog, ice, or snow.
- Not on winding or hilly roads.
- Not for city driving.

(Continued)

Warning (Continued)

- Not during heavy or emergency braking.
- Not on surface streets.
- Not on a road shoulder, service drive, or under an elevated freeway.
- Not in tunnels.
- Not when towing a trailer.
- Not in a highway exit lane.

When Super Cruise is Available

Super Cruise Indicator

Super Cruise is designed to operate only when:

- ACC is on. See *Adaptive Cruise Control (Advanced)* ⇨ *251*.
- Teen Driver is not active.
- The GPS detects the vehicle is on a compatible highway.
- Both the camera and the radar sensors are functioning and not covered, obstructed, or damaged.
- The Driver Attention System (DAS) detects the driver's head and eyes are directed toward the road.
- The lane markings are clearly visible and able to be detected by the system.

Poor Conditions

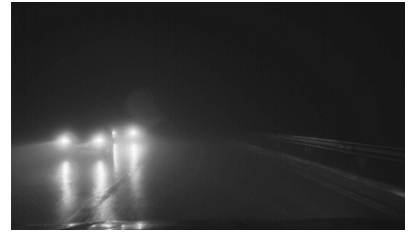

Poor Conditions

Using Super Cruise

⚠ Warning

To prevent serious injury or death:

- Always check that Super Cruise is available before pressing .
- Only remove your hands from the steering wheel if the steering wheel light bar, , and are green. Super Cruise may not begin steering immediately, even when Super Cruise is available and has been pressed.

To engage:

- Press to turn on ACC. Make sure the white indicator displays in the instrument cluster. See *Adaptive Cruise Control (Advanced)* ⇨ *251*.
- When Super Cruise is available, the white will display in the instrument cluster.
- Press . ACC will set the speed at the current vehicle speed. If ACC has a previously set speed, it may resume at that speed.
- Super Cruise, when engaged, will change Forward Collision System customization to Alert and Brake.

When engaged and not steering the vehicle, the steering wheel light bar flashes blue, and will be blue. The driver is in control of steering and Super Cruise is not steering the vehicle.

When the vehicle is positioned in the center of the lane, the steering wheel light bar and display will turn green, indicating Super Cruise is steering the vehicle.

When Super Cruise controls the steering, traffic and other conditions and laws permit, and it is safe to do so, your hands can be taken off the steering wheel.

Always pay attention to the road and the operation of the vehicle. Always monitor and be attentive of surrounding traffic, including vehicles that may cross the road in front of your vehicle.

Super Cruise steering can be overridden with manual steering at any time. When Super Cruise is engaged, always be prepared to take immediate action — including steering, accelerating, and braking quickly, if necessary.

Steering Manually and Changing Lanes

The vehicle can always be manually steered, even with Super Cruise engaged; for example, when changing lanes.

When the steering wheel is moved manually, the steering wheel light bar pulses blue and on the instrument cluster turns blue to indicate Super Cruise is not steering the vehicle.

When ready to allow Super Cruise to resume steering again, position the vehicle in the center of the lane, hold the steering wheel until the steering wheel light bar turns green, and then release the steering wheel when it is safe to do so.

Super Cruise does not respond to vehicles in other lanes near your vehicle.

⚠ Warning

To help prevent crashes before making a lane change:

- Always check mirrors.
- Glance over your shoulder.
- Use the turn signals.

Super Cruise Lane Change

Super Cruise can steer to perform a single lane change under certain conditions when requested by the driver.

To request a lane change:

1. Verify the lane next to your vehicle is clear and conditions are safe to make a lane change.
2. Use the turn signal lever to activate the turn signal in the direction of the desired lane change.
3. Return the turn signal lever to the neutral position after the lane change. See *Turn and Lane-Change Signals* ⇨ *129*.

   If Super Cruise detects that traffic is clear, Super Cruise will steer the vehicle to perform the lane change. A message appears on the Driver Information Center (DIC) during the lane change to provide more information on the status of the lane change.

To cancel a lane change, return the turn signal lever to the neutral position or move the turn signal lever.

The Super Cruise Lane Change feature can be enabled or disabled through the vehicle personalization menu. See “Super Cruise Lane Change” under *Vehicle Personalization* ⇨ *117*.

⚠ Warning

Super Cruise Lane Change may not detect a vehicle in an adjacent lane. Always supervise the driving task and monitor traffic conditions when using the Super Cruise Lane Change feature. Only request a lane change when traffic conditions are safe for a lane change, and always be ready to manually steer the vehicle. See “Steering Manually and Changing Lanes” listed previously in this section.

Take Over Alert

⚠ Warning

Super Cruise will not maintain the vehicle's speed while the steering wheel light bar is flashing red. If the steering wheel light bar flashes red, immediately resume manual steering to prevent serious injury or death. If you do not resume manual steering, the vehicle will begin to slow in the same lane and eventually come to a complete stop on the road.

Any time the steering wheel light bar flashes red, resume manual steering immediately. The instrument cluster light , will also turn red and a message will display in the Driver Information Center (DIC). In addition, beeps will sound, or the Safety Alert Seat will vibrate. See "Collision/ Detection Systems" under *Vehicle Personalization* ⇨ *117*. After you begin steering manually, then Super Cruise will disengage.

The red flashing steering wheel light bar could occur under any of the following conditions:

- Lane markings are poor, or visibility is limited.
- The Driver Attention System (DAS) does not detect that the driver's head and eyes are directed toward the road.
- ACC is canceled.
- The vehicle is on a tight curve, or the lanes are too wide, or the vehicle goes into a curve too fast.
- The compatible road ends.
- The vehicle is approaching an intersection controlled by a traffic light, stop sign, or other traffic control device.
- A Super Cruise system fault occurs.

Attention to the Road

⚠ Warning

Super Cruise is a driver assistance system and cannot accurately detect or predict all situations. Super Cruise is not a crash avoidance system. To prevent serious injury or death, you must supervise the driving task and monitor the road conditions. You may need to respond to traffic events by steering, braking, or accelerating. See *Defensive Driving* ⇨ *204*. Super Cruise also cannot determine whether you are awake, asleep, impaired, or properly focused on safe driving. The vehicle could crash into other vehicles, drive out of the lane, or drive off the road. Complete attention is always required while driving, even while using Super Cruise. Be prepared to take over steering or apply the brakes at any time.

⚠ Warning

To prevent serious injury or death, be alert and pay special attention when passing highway exits, entrances, and crossings with Super Cruise, and be ready to take control of the vehicle when necessary. Changes in lane markings around exits and entrances can momentarily cause Super Cruise to not detect the correct lane. If this occurs, Super Cruise may attempt steering inputs to bring the vehicle back into the correct lane and, in rare circumstances, could over-correct and cause the vehicle to momentarily cross into a lane next to your vehicle unless you manually steer to maintain your lane position.

The Driver Attention System (DAS) on the steering column continually monitors driver head and eye position to estimate driver attention to the road. The camera does not record or share pictures, audio, or video.

Sunglasses, hats, or other types of clothing that change the shape of the head may interfere with camera performance. To improve camera performance, raise or lower the steering wheel, or change the seat position.

Pay close attention to the road ahead to avoid these three increasing alerts:

First Alert	• If the steering wheel light bar flashes green, the system has detected that your head and eyes may not be directed toward the road. • The flashing will stop when the system detects that your head and eyes appear to be directed toward the road.
Second Alert	• If the steering wheel light bar flashes green for too long, Super Cruise will alert the driver to take control of steering immediately by flashing the light bar red. Also, either beeps will sound or the Safety Alert Seat will vibrate. See “Collision/Detection Systems” under *Vehicle Personalization* ⇨ *117*. • Take over steering, then Super Cruise will disengage. • To re-engage Super Cruise, press . See “Using Super Cruise” previously in this section.
Third Alert	• If the steering wheel light bar flashes red for too long, a voice command will tell you to take control of the vehicle. • Take control of the steering immediately; ACC and Super Cruise will disengage. • A DIC message will indicate that Super Cruise is locked out. Super Cruise cannot be re-engaged until the next ignition cycle. • Continued failure to take over steering will cause the vehicle to brake to a stop and OnStar will be called. The brake lamps and hazard warning flashers will come on. • Take control of the vehicle and continue driving.

Stationary or Very Slow-Moving Objects; Cross-Traffic

⚠ Warning

Super Cruise is not a crash avoidance system and will not steer or brake to avoid a crash. Super Cruise does not steer to prevent a crash with stopped or slow-moving vehicles. You must supervise the driving task and may need to steer and brake to prevent a crash, especially in stop-and-go traffic or when a vehicle suddenly enters your lane. Always pay attention when using Super Cruise. Failure to do so could result in a crash involving serious injury or death.

Curves in the Road

⚠ Warning

The vehicle could drift out of your lane of travel. To prevent crashes, always be ready to manually steer.

(Continued)

Warning (Continued)

Super Cruise may not detect your lane on curves in the road. Super Cruise may not detect the markings that show your lane. You may not have time to react to a vehicle in the lane next to your vehicle while on curves in the road.

Super Cruise may operate differently in sharp curves. It may drift out of your lane of travel if the curve is too sharp.

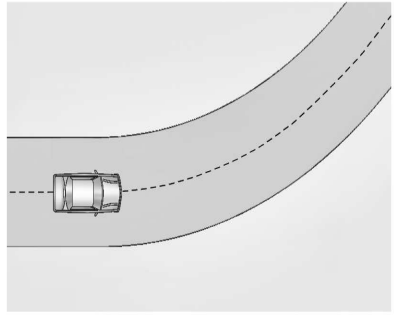

When entering a curve, Super Cruise may not detect the lane markings and may not adjust the steering enough to stay in your lane of travel. When this happens, you will need to steer the vehicle.

Super Cruise may detect other lane markings that are not in your lane and may or may not steer appropriately to maintain your lane.

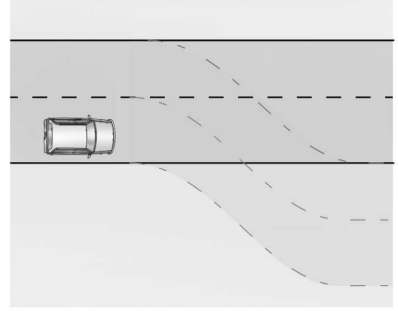

Super Cruise may occasionally provide an alert and/or steering that is considered unnecessary. It could respond to lane markings in different lanes, signs, guardrails, and other stationary objects when entering or

exiting a curve. This is normal operation. The vehicle does not need service.

Other Vehicles Entering Your Lane

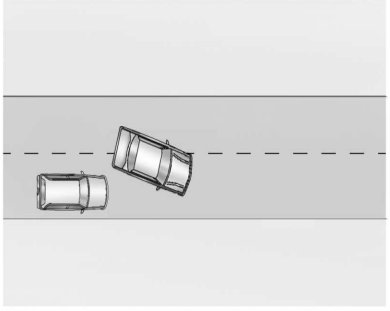

Super Cruise may not detect a vehicle that enters your lane, or may not brake fast enough to avoid a crash. You must manually brake and steer the vehicle.

Intersections; Vehicles Crossing the Road Ahead

Super Cruise will not brake the vehicle when approaching an intersection that is controlled by a traffic light or stop sign. Super Cruise will not detect vehicles crossing the road ahead, including at intersections, and will not automatically steer or brake to prevent a collision. You must manually brake and steer the vehicle.

Towing a Trailer

Do not use Super Cruise when towing a trailer. For towing capability, see *Trailer Towing (LSY 2.0L L4 Engine)* ⇨ *300*.

Super Cruise on Hills

Do not use Super Cruise while driving on steep hills.

Super Cruise Indicator Light Summary

The steering wheel light bar and instrument cluster light provide the following important information about Super Cruise operation:

Steering Wheel Light Bar	Instrument Cluster Light	Super Cruise Description
Off	Off	Super Cruise is off. There is no automatic steering. Operate the vehicle manually.
Off	White	Super Cruise is available and can be engaged.
Solid Green	Solid Green	Super Cruise is steering. Pay attention to the road and vehicle operation.
Flashing Blue	Solid Blue	Super Cruise is not steering. Operate the vehicle manually. See “Steering Manually and Changing Lanes” previously in this section.
Flashing Green	Solid Green	Super Cruise has detected you are not paying sufficiently close attention to the road. Pay attention to the road. See “Attention to the Road” previously in this section.
Flashing Red	Solid Red	Take over steering immediately. Super Cruise will disengage. See “Take Over Alert” previously in this section.

Disengaging Super Cruise

There are two ways to disengage Super Cruise:

- Press while your hands are on the steering wheel. The Super Cruise steering will disengage.
- Press the brake pedal while your hands are on the steering wheel. Both Super Cruise steering and Adaptive Cruise Control will disengage.

Super Cruise Messages

If does not appear, can be pressed to display a DIC message as to why the system is unavailable.

Immediately after a disengagement, pressing the within 10 seconds will display a DIC message with the reason for Super Cruise disengagement.

Super Cruise Message Summary

Unavailable Turn on Adaptive Cruise Control	Adaptive Cruise Control must be on before Super Cruise can be enabled. • Set speed is not required before enabling Super Cruise. • Adaptive Cruise Control is not required to be engaged before enabling Super Cruise.
Unavailable Freeways Only	Super Cruise is disabled because the vehicle is being driven on a road that is not compatible.
Unavailable Lane Ending	Super Cruise is disabled because the driving lane is ending.
Unavailable Poor Weather Conditions	Super Cruise is disabled due to inclement weather conditions affecting system performance.
Unavailable Set Forward Collision Setting to Alert and Brake	Super Cruise is disabled unless Alert and Brake is selected. 1. Select the Settings menu, then Vehicle, then Collision/ Detection Systems, and then Forward Collision System. 2. Set Forward Collision to Alert and Brake.

Super Cruise Message Summary (cont'd)

Unavailable No Road Information	• There is no map information available for that portion of the road. Recent road reconstruction may turn off Super Cruise for that section of road until new map information is available. • The vehicle is not on the correct type of road. A controlled access freeway or compatible divided highway is required for Super Cruise. • There are lanes entering or exiting on both the left and right side of the road. • The vehicle is approaching an interchange or intersection. The message will appear for 10 seconds or less.
Unavailable Sensors Can’t Find Lane Lines	• Rain or snow is inhibiting the system’s ability to see lane lines. • Direct sunlight is on the front camera at dawn or dusk. • There are missing or poor lane line markings on the road. • There is sun glare on the road surface. • There is heavy rain, puddles, or road spray.

Super Cruise Message Summary (cont'd)

Unavailable Sensor Can't See Face Clearly	• Sun is shining into the Driver Attention System (DAS) camera. • Dawn or dusk sun glare is on the driver's face. • Cups, food, hands, or other objects are obscuring the DAS view of the driver's face. • The steering column is pointed too high or low for the DAS to see the driver. Adjust the steering column or the seat if the message occurs frequently.
Unavailable Looking Away From Road for Too Long	The DAS system detects that the driver is not looking at the road.
Unavailable Driving Too Fast	The vehicle is traveling faster than 137 km/h (85 mph). The maximum Super Cruise speed in curves will vary based on how sharp the curve is. The vehicle will automatically decrease speed if needed.
Unavailable Driving in Exit Lane	The Super Cruise system has detected that the vehicle is in an exit lane.
Unavailable Press OnStar Button	The Super Cruise system has lost connectivity. • There is poor reception in isolated areas. • Reception is being blocked by buildings or other large structures. • Super Cruise subscription is required.
Unavailable You Have Taken Vehicle Control	• The brake pedal is being pressed. • The Adaptive Cruise Control has been canceled or turned off.

Super Cruise Message Summary (cont'd)

Unavailable Sensor Blocked	Clear snow, ice, dirt, or other contaminants from the front and rear areas of the vehicle.
Unavailable Sharp Curve	Some curves are too sharp to be navigated by the Super Cruise system. Super Cruise will be available after the curve is traveled.
Super Cruise Unavailable	Super Cruise is unavailable for reasons not described in other messages.
Super Cruise Locked Out See Owner's Manual	The driver did not take control of the vehicle when prompted by the Super Cruise system. The Super Cruise system will be disabled until the ignition is turned off and back on.

Map Updates

Super Cruise map information must be periodically updated at least once every seven months to determine whether Super Cruise is available on certain roads. See the following website for Super Cruise map open source compliance documentation, including the license information:

http://oss.veoneer.com/

Data Download

If the vehicle is equipped with OnStar and has an active service plan, additional data may be collected through the OnStar system. This includes information about: the vehicle's operation; a crash involving the vehicle; the use of the vehicle and its features; and, in certain situations, the location and approximate GPS speed of the vehicle. Refer to the OnStar Terms and Conditions and Privacy Statement on the OnStar website.

Location Services

This setting enables or disables sharing of vehicle location outside the vehicle for certain purposes. Even if the Location Services setting is disabled, vehicle location information will continue to be shared for emergency services and Super Cruise, if equipped.

System Care

The camera on the steering column has a lens cover that may become dirty over time and affect camera performance. Clean the lens cover with a soft cloth sprayed with glass cleaner. Wipe the lens gently, then dry it. Never use abrasive cloths/cleaners or corrosive chemicals of any kind on the lens cover.

Super Cruise uses the front radar, front camera, and 360 degree cameras for its operation. Clean surfaces are required for Super Cruise operation. See *Adaptive Cruise Control (Advanced)* ⇨ *251*, "Surround Vision Camera" under *Assistance Systems for Parking or Backing* ⇨ *277*, and *Lane Keep Assist (LKA)* ⇨ *291* for care information.

Caution

The Super Cruise system is a highly sophisticated system and should only be serviced by technicians with the proper training, tools, and safety instructions, which your dealer has. Without proper training and tools the vehicle may become damaged.

Driver Assistance Systems

This vehicle may have features that work together to help avoid crashes or reduce crash damage while driving, backing, and parking. Read this entire section before using these systems.

⚠ Warning

Do not rely on the Driver Assistance Systems. These systems do not replace the need for paying attention and driving safely. You may not hear or feel alerts or warnings provided by these systems. Failure to use proper care

(Continued)

Warning (Continued)

when driving may result in injury, death, or vehicle damage. See *Defensive Driving* ⇨ *204*.

Under many conditions, these systems will not:

- Detect children, pedestrians, bicyclists, or animals.
- Detect vehicles or objects outside the area monitored by the system.
- Work at all driving speeds.
- Warn you or provide you with enough time to avoid a crash.
- Work under poor visibility or bad weather conditions.
- Work if the detection sensor is not cleaned or is covered by ice, snow, mud, or dirt.
- Work if the detection sensor is covered up, such as with a sticker, magnet, or metal plate.

(Continued)

Warning (Continued)

- Work if the detection sensor viewing zone is interrupted by an installed accessory, such as a bike rack, or hitch mounted cargo carrier.
- Work if the area surrounding the detection sensor is damaged or not properly repaired.

Complete attention is always required while driving, and you should be ready to take action and apply the brakes and/or steer the vehicle to avoid crashes.

Audible or Safety Alert Seat

Some driver assistance features alert the driver of obstacles by beeping. To change the volume of the warning chime, see “Comfort and Convenience” under *Vehicle Personalization* ⇨ *117*.

If equipped with the Safety Alert Seat, the driver seat cushion may provide a vibrating pulse alert instead of beeping. To change this, see “Collision/Detection Systems” under *Vehicle Personalization* ⇨ *117*.

Cleaning

Depending on vehicle options, keep these areas of the vehicle clean to ensure the best driver assistance feature performance. Driver Information Center (DIC) messages may display when the systems are unavailable or blocked.

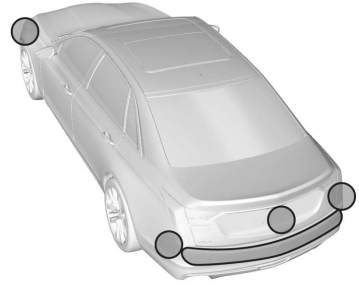

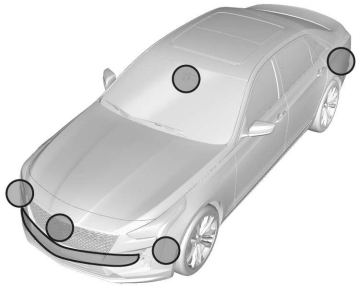

- Front and rear bumpers and the area below the bumpers
- Front grille and headlamps
- Front camera lens in the front grille or near the front emblem
- Front side and rear side panels
- Outside of the windshield in front of the rearview mirror
- Side camera lens on the bottom of the outside mirrors
- Rear side corner bumpers
- Rear Vision Camera above the license plate

Radio Frequency

This vehicle may be equipped with driver assistance systems that operate using radio frequency. See *Radio Frequency Statement* ⇨ *409*.

Assistance Systems for Parking or Backing

If equipped, the Rear Vision Camera (RVC), Rear Park Assist (RPA), Front Park Assist (FPA), Backing Warning and Reverse Automatic Braking (RAB), and Rear Cross Traffic Alert (RCTA) may help the driver park or avoid objects. Always check around the vehicle when parking or backing.

Rear Vision Camera (RVC)

When the vehicle is shifted into R (Reverse), the RVC displays an image of the area behind the vehicle in the infotainment display. The previous screen displays when the vehicle is shifted out of R (Reverse) after a short delay. To return to the previous screen sooner, press Home or Back on the infotainment system, shift into P (Park), or, while in D (Drive), reach a vehicle speed of approximately 12 km/h (8 mph).

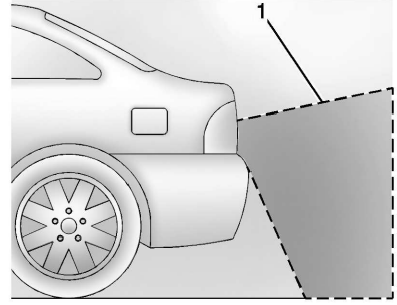

1. View Displayed by the Camera

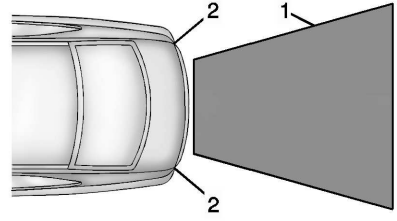

1. View Displayed by the Camera
2. Corners of the Rear Bumper

Displayed images may be farther or closer than they appear. The area displayed is limited and objects that are close to either corner of the bumper or under the bumper do not display.

A warning triangle may display to show that RPA or RCTA has detected an object. This triangle changes from amber to red and increases in size the closer the object.

⚠ Warning

The camera(s) do not display children, pedestrians, bicyclists, crossing traffic, animals, or any other object outside of the cameras' field of view, below the bumper, or under the vehicle. Shown distances may be different from actual distances. Do not drive or park the vehicle using only these camera(s). Always check behind and around the vehicle before driving. Failure to use proper care may result in injury, death, or vehicle damage.

Camera Views

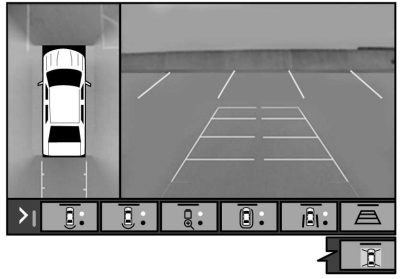

Touch the camera view buttons along the bottom of the infotainment display.

Front/Rear Standard View : Displays an image of the area in front or behind the vehicle. Touch Front/Rear Standard View on the infotainment display when a camera view is active. Touching the button multiple times will toggle between front and rear camera views.

If equipped, the front view camera also displays when the Park Assist system detects an object within 30 cm (12 in).

Front/Rear Junction View : Displays a front or rear cross traffic view that shows objects directly to the left and right of the front or back of the vehicle. Touch Junction View on the infotainment display when a camera view is active. Touching the button multiple times will toggle between front and rear camera views.

Front/Rear Overhead View : Displays a front or rear overhead view of the vehicle. Touching the button will toggle between the two views.

Front/Rear Bowl View : Displays a view of the vehicle from either the front or the back of the vehicle. Touch Bowl View on the infotainment display when a camera view is active. Touching the button multiple times will toggle between forward and rearward views. Rear Pedestrian Alert, Park Assist, and RCTA are not available when Bowl view is active.

Side Forward/Rearward View : Displays a view that shows objects next to the front or rear sides of the vehicle. Touch Side Forward/Rearward View on the infotainment display when a camera view is active.

Touching the button multiple times will toggle between forward and rearward views. Rear Pedestrian Alert, Park Assist, and RCTA are not available when Side Forward/Rearward view is active.

Guidance Lines : Displays available guidelines. The horizontal markings represent distance from the vehicle.

Top Down View : Displays an image of the area surrounding the vehicle, along with other views in the infotainment display. Top Down can be enabled or disabled by pressing the Top Down View button multiple times.

Park Assist

The vehicle may be equipped with the Rear Park Assist (RPA) and Front Park Assist (FPA). The Park Assist system may provide assistance to driver when backing up and parking. Park Assist uses ultrasonic sensors in the bumpers to measure the distance between the vehicle and objects. The system calculates the distance between vehicle and object via measuring the time it takes for the ultrasonic waves to bounce back from the object. Park Assist works only at speeds up to about 11 Km/h (7 mph). An illuminated LED in the parking assist button indicates that the system is ready to operate. The sensors on the bumpers may detect objects up to 1.8m (6 ft) behind and 1.25m (4 ft) in front of the vehicle within a zone 25 cm (10 in) high off the ground and below bumper level. These detection distances may be shorter during warmer or humid weather. Blocked sensors will not detect objects and can also cause false detections. Keep the sensors clean of mud, dirt, snow, ice, and slush; and clean sensors after a car wash in freezing temperatures.

⚠ Warning

The Park Assist System is no substitute for careful and attentive driving. The Park Assist system does not detect children, pedestrians, bicyclists, animals, or objects located below the bumper or that are too close or too far from the vehicle. It is not

(Continued)

Warning (Continued)

available at speeds greater than 11 km/h (7 mph). To prevent injury, death, or vehicle damage, even with Park Assist, always check the area around the vehicle and check all mirrors before moving forward or backing.

How the System Works

The instrument cluster may have a Park Assist display with bars that show “distance to object,” driving direction, and object location information for the Park Assist system. As the object gets closer, more bars light up and the bars change color from yellow to amber to red.

When an object is very close to the vehicle rear (<0.6m (2 ft)), five beeps will sound from the rear followed by a continuous beep from the rear, or both sides of the Safety Alert Seat will pulse five times. When an object is very close to the vehicle front (<0.3m (1 ft)), a continuous beep will sound from the front, or both sides of the Safety Alert Seat will pulse five times. Beeps for FPA are higher pitched than for RPA.

When the System Does Not Seem to Work Properly

The following messages may be displayed on the DIC:

SERVICE PARKING ASSIST : If this message occurs, check the following conditions:

- The sensors are not clean. Keep the vehicle's rear bumper free of mud, dirt, snow, ice, and slush. For cleaning instructions, see *Exterior Care* ⇨ *370*.
- The Park Assist sensors are covered by frost or ice. Frost or ice can form around and behind the sensors and may not always be seen; this can occur after washing the vehicle in cold weather. The message may not clear until the frost or ice has melted.

If the above conditions do not exist, take the vehicle to your dealer to repair the system.

PARK ASSIST OFF : If the PA system does not activate due to a temporary condition, the message displays on the DIC. This can occur under the following conditions:

- The driver has disabled the system.
- An object was hanging out of the trunk during the last drive cycle. Once the object is removed, RPA will return to normal operation.
- The bumper is damaged. Take the vehicle to your dealer to repair the system.
- Other conditions, such as vibrations from a jackhammer or the compression of air brakes on a very large truck, are affecting system performance.

Backing Warning and Reverse Automatic Braking

Vehicles with Adaptive Cruise Control (ACC) have the Backing Warning System and Reverse Automatic Braking (RAB) system. The Backing Warning part of this system can warn of rear objects when backing up at speeds greater than 8 km/h (5 mph), and RAB may automatically brake hard at speeds between 1–32 km/h (0.5–20 mph).

The Backing Warning System will beep once from the rear when an object is first detected, or pulse twice on both sides of the Safety Alert Seat. When the system detects a potential crash, beeps will be heard from the rear, or five pulses will be felt on both sides of the Safety Alert Seat. There may also be a brief, sharp application of the brakes.

⚠ Warning

The Backing Warning System only operates at speeds greater than 8 km/h (5 mph). It does not detect children, pedestrians, bicyclists,

(Continued)

Warning (Continued)

animals, or objects below the bumper or that are too close or too far from the vehicle. In some situations, such as at higher backing speeds, there may not be enough time for the short, sharp application of the vehicle brake system to occur. To prevent injury, death, or vehicle damage, even with the Backing Warning System, always check the area around the vehicle and check all mirrors before backing.

When the vehicle is in R (Reverse) and the system detects the vehicle is backing too fast to avoid a crash with a detected object behind your vehicle in your path, it may automatically brake hard to a stop to help avoid or reduce the harm caused by a backing crash.

⚠ Warning

RAB may not avoid many types of backing crashes. Do not wait for the automatic braking to apply. This system is not designed to replace driver braking and only works in R (Reverse) when an object is detected directly behind the vehicle. It may not brake or stop in time to avoid a crash. It will not brake for objects when the vehicle is moving at very low speeds. It does not detect children, pedestrians, bicyclists, animals, or objects below the bumper or that are too close or too far from the vehicle. To prevent injury, death, or vehicle damage, even with RAB, always check the area around the vehicle before and while backing.

If the brake pedal is not pressed soon after the stop, the Electric Parking Brake (EPB) may be set. When it is safe, press the accelerator pedal firmly at any time to override RAB.

⚠ Warning

There may be instances where unexpected or undesired automatic braking occurs. If this happens, either press the brake pedal or firmly press the accelerator pedal to release the brakes from the RAB system. Before releasing the brakes, check the RVC and check the area around the vehicle to make sure it is safe to proceed.

Rear Cross Traffic Alert (RCTA)

If equipped, RCTA displays a red warning triangle with a left or right pointing arrow to warn of traffic coming from the left or right. This system detects objects coming from up to 20 m (65 ft) from the left or right side of the vehicle. When an object is detected, either three beeps sound from the left or right or three Safety Alert Seat pulses occur on the left or right side, depending on the direction of the detected vehicle.

Use caution while backing up when towing a trailer, as the RCTA detection zones that extend out from the back of the vehicle do not move further back when a trailer is towed.

See *Radio Frequency Statement* ⇨ *409*.

Turning the Features On or Off

Touch P on the center stack to turn on or off the Front and Rear Park Assist, Reverse Automatic Braking (RAB), and the Backing Warning System at the same time. The indicator light next to the button comes on when the features are on and turns off when the features have been disabled.

Turn off Park Assist, RCTA, and RAB when towing a trailer.

To turn the RPA symbols or guidance lines (on some models) on or off, see "Rear Camera Park Assist Symbols" under *Vehicle Personalization* ⇨ *117*.

RCTA can also be turned on or off through vehicle personalization. See "Collision/Detection Systems" under *Vehicle Personalization* ⇨ *117*.

Rear Pedestrian Alert

Under certain conditions, this feature can provide alerts for a pedestrian within the system's range directly behind the vehicle. This feature only works in R (Reverse) below 12 km/h (8 mph), and detects pedestrians up to 8 m (26 ft) away during daytime driving. During nighttime driving, feature performance is very limited.

Rear Pedestrian Alert Indicator

When a pedestrian is detected within the system's range directly behind the vehicle, this symbol flashes amber on the infotainment display, along with two beeps from the rear, or if equipped, two pulses from both sides of the driver seat. When a pedestrian is detected close to the vehicle, the symbol flashes red on the infotainment display, along with seven beeps from the rear, or if equipped, seven pulses from both sides of the driver seat.

⚠ Warning

Rear Pedestrian Alert does not automatically brake the vehicle. It also does not provide an alert unless it detects a pedestrian, and it may not detect all pedestrians if:

- The pedestrian is not directly behind the vehicle, fully visible to the Rear Vision Camera (RVC), or standing upright.
- The pedestrian is part of a group.
- The pedestrian is a child.
- Visibility is poor, including nighttime conditions, fog, rain, or snow.
- The RVC is blocked by dirt, snow, or ice.
- The RVC, taillamps, or back-up lamps are not cleaned or in proper working condition.
- The vehicle is not in R (Reverse).

(Continued)

Warning (Continued)

To help avoid death or injury, always check for pedestrians around the vehicle before backing up. Be ready to take action and apply the brakes. See *Defensive Driving* ⇨ *204*. Keep the RVC, taillamps, and back-up lamps clean and in good repair.

Rear Pedestrian Alert can be set to Off or Alert. See “Rear Pedestrian Detection” in “Collision/Detection Systems” under *Vehicle Personalization* ⇨ *117*. If equipped, alerts can be set to beeps or seat pulses. See “Alert Type” in “Collision/Detection Systems” under *Vehicle Personalization* ⇨ *117*.

Assistance Systems for Driving

If equipped, when driving the vehicle in a forward gear, Forward Collision Alert (FCA), Lane Departure Warning (LDW), Lane Keep Assist (LKA), Side Blind Zone Alert (SBZA), Lane Change Alert (LCA), Automatic Emergency Braking (AEB), and/or the Front Pedestrian Braking (FPB) System can help to avoid a crash or reduce crash damage.

Forward Collision Alert (FCA) System

The FCA system may help to avoid or reduce the harm caused by front-end crashes. When approaching a vehicle ahead too quickly, FCA provides a red flashing alert on the windshield and rapidly beeps or pulses the driver seat. FCA also lights an amber visual alert if following another vehicle too closely.

FCA detects vehicles within a distance of approximately 60 m (197 ft) and operates at speeds above 8 km/h (5 mph). If the vehicle has Adaptive Cruise Control (ACC), it can detect vehicles to distances of approximately 110 m (360 ft) and operates at all speeds. See *Adaptive Cruise Control (Advanced)* ⇨ *251*.

⚠ Warning

FCA is a warning system and does not apply the brakes. When approaching a slower-moving or stopped vehicle ahead too rapidly, or when following a vehicle too closely, FCA may not provide a warning with enough time to help avoid a crash. It also may not provide any warning at all. FCA does not warn of pedestrians, animals, signs, guardrails, bridges, construction barrels, or other objects. Be ready to take action and apply the brakes. See *Defensive Driving* ⇨ *204*.

FCA can be disabled through vehicle personalization. See "Collision/Detection Systems" under *Vehicle Personalization* ⇨ *117*.

Detecting the Vehicle Ahead

FCA warnings will not occur unless the FCA system detects a vehicle ahead. When a vehicle is detected, the vehicle ahead indicator will display green. Vehicles may not be detected on curves, highway exit ramps, or hills, due to poor visibility; or if a vehicle ahead is partially blocked by pedestrians or other objects. FCA will not detect another vehicle ahead until it is completely in the driving lane.

⚠ Warning

FCA does not provide a warning to help avoid a crash, unless it detects a vehicle. FCA may not detect a vehicle ahead if the FCA sensor is blocked by dirt, snow, or ice, or if the windshield is damaged. It may also not detect a vehicle on winding

(Continued)

Warning (Continued)

or hilly roads, or in conditions that can limit visibility such as fog, rain, or snow, or if the headlamps or windshield are not cleaned or in proper condition. Keep the windshield, headlamps, and FCA sensors clean and in good repair.

Collision Alert

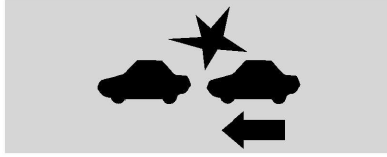

With Head-Up Display

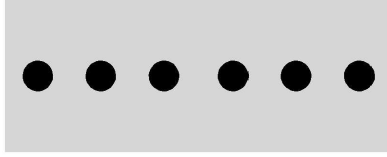

Without Head-Up Display

When your vehicle approaches another detected vehicle too rapidly, the red FCA display will flash on the windshield. Also, eight rapid high-pitched beeps will sound from the front, or both sides of the Safety Alert Seat will pulse five times. When this Collision Alert occurs, the brake system may prepare for driver braking to occur more rapidly which can cause a brief, mild deceleration. Continue to apply the brake pedal as needed.

Tailgating Alert

The vehicle ahead indicator will display amber when you are following a vehicle ahead too closely.

Selecting the Alert Timing

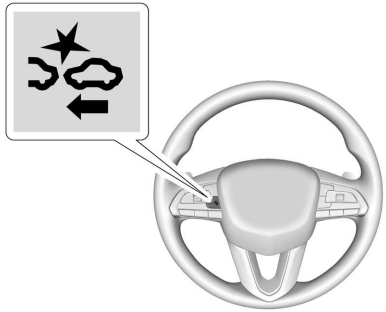

The Collision Alert control is on the steering wheel. Press to set the FCA timing to Far, Medium, or Near. The first button press shows the current setting on the DIC. Additional button presses will change this setting. The chosen setting will remain until it is changed and will affect the timing of both the Collision Alert and the Tailgating Alert features. The timing of both alerts will vary based on vehicle speed. The faster the vehicle speed, the farther away the alert will occur. Consider traffic and weather conditions when selecting the alert timing. The range of selectable alert timings may not be appropriate for all drivers and driving conditions.

If your vehicle is equipped with Adaptive Cruise Control (ACC), changing the FCA timing setting automatically changes the following gap setting (Far, Medium, or Near).

Following Distance Indicator

The following distance to a moving vehicle ahead in your path is indicated in following time in seconds on the Driver Information Center (DIC). See *Driver Information Center (DIC) (Base Level)* ⇨ *107* or *Driver Information Center (DIC) (Uplevel)* ⇨ *110*. The minimum following time is 0.5 seconds away. If there is no vehicle detected ahead, or the vehicle ahead is out of sensor range, dashes will be displayed.

Unnecessary Alerts

FCA may provide unnecessary alerts for turning vehicles, vehicles in other lanes, objects that are not vehicles, or shadows. These alerts are normal operation and the vehicle does not need service.

Cleaning the System

If the FCA system does not seem to operate properly, this may correct the issue:

- Clean the outside of the windshield in front of the rearview mirror.
- Clean the entire front of the vehicle.
- Clean the headlamps.

Automatic Emergency Braking (AEB)

The AEB system may help avoid or reduce the harm caused by front-end crashes. AEB also includes Intelligent Brake Assist (IBA). When the system detects a vehicle ahead in your path that is traveling in the same direction that you may be about to crash into, it can provide a boost to braking or automatically brake the vehicle. This can help avoid or lessen the severity of crashes when driving in a forward gear. Depending on the situation, the vehicle may automatically brake moderately or hard. This automatic emergency braking can only occur if a vehicle is detected. This is shown by

the FCA vehicle ahead indicator being lit. See *Forward Collision Alert (FCA) System* ⇨ *283*.

The system works when driving in a forward gear between 8 km/h (5 mph) and 80 km/h (50 mph), or on vehicles with Adaptive Cruise Control (ACC), above 4 km/h (2 mph). It can detect vehicles up to approximately 60 m (197 ft).

⚠ Warning

AEB is an emergency crash preparation feature and is not designed to avoid crashes. Do not rely on AEB to brake the vehicle. AEB will not brake outside of its operating speed range and only responds to detected vehicles.

AEB may not:

- Detect a vehicle ahead on winding or hilly roads.
- Detect all vehicles, especially vehicles with a trailer, tractors, muddy vehicles, etc.

(Continued)

Warning (Continued)

- Detect a vehicle when weather limits visibility, such as in fog, rain, or snow.
- Detect a vehicle ahead if it is partially blocked by pedestrians or other objects.

Complete attention is always required while driving, and you should be ready to take action and apply the brakes and/or steer the vehicle to avoid crashes.

AEB may slow the vehicle to a complete stop to try to avoid a potential crash. If this happens, AEB may hold the vehicle at rest momentarily. A firm press of the accelerator will release the braking.

⚠ Warning

AEB may automatically brake the vehicle suddenly in situations where it is unexpected and undesired. It could respond to a turning vehicle ahead, guardrails,

(Continued)

Warning (Continued)

signs, and other non-moving objects. To override AEB, firmly press the accelerator pedal, if it is safe to do so.

Intelligent Brake Assist (IBA)

IBA may activate when the brake pedal is applied quickly by providing a boost to braking based on the speed of approach and distance to a vehicle ahead.

Minor brake pedal pulsations or pedal movement during this time is normal and the brake pedal should continue to be applied as needed. IBA will automatically disengage only when the brake pedal is released.

⚠ Warning

IBA may increase vehicle braking in situations when it may not be necessary. You could block the flow of traffic. If this occurs, take your foot off the brake pedal and then apply the brakes as needed.

AEB and IBA can be disabled through vehicle personalization. See “Collision/ Detection Systems” under *Vehicle Personalization* ⇨ *117*.

⚠ Warning

Using AEB or IBA while towing a trailer could cause you to lose control of the vehicle and crash. Turn the system to Alert, or if the vehicle has ACC to Off, when towing a trailer.

A system unavailable message may display if:

- The front of the vehicle or windshield is not clean.
- Heavy rain or snow is interfering with object detection.
- There is a problem with the StabiliTrak/Electronic Stability Control (ESC) system.

The AEB system does not need service.

Front Pedestrian Braking (FPB) System

If equipped, the FPB system may help avoid or reduce the harm caused by front-end crashes with nearby pedestrians when driving in a forward gear. FPB displays an amber indicator, 🚶, when a nearby pedestrian is detected ahead. When approaching a detected pedestrian too quickly, FPB provides a red flashing alert on the windshield and rapidly beeps or pulses the driver seat. FPB can provide a boost to braking or automatically brake the vehicle. This system includes Intelligent Brake Assist (IBA), and the Automatic Emergency Braking (AEB) System may also respond to pedestrians. See *Automatic Emergency Braking (AEB)* ⇨ *285*.

The FPB system can detect and alert to pedestrians in a forward gear at speeds between 8 km/h (5 mph) and 80 km/h (50 mph). During daytime driving, the system detects pedestrians up to a distance of approximately 40 m (131 ft). During nighttime driving, system performance is very limited. If the vehicle is equipped with the Night Vision system, during nighttime driving, the vehicle can detect and alert to pedestrians whenever in a forward gear.

⚠ Warning

FPB does not provide an alert or automatically brake the vehicle, unless it detects a pedestrian. FPB may not detect pedestrians, including children:

- When the pedestrian is not directly ahead, fully visible, or standing upright, or when part of a group.
- Due to poor visibility, including nighttime conditions, fog, rain, or snow.
- If the FPB sensor is blocked by dirt, snow, or ice.
- If the headlamps or windshield are not cleaned or in proper condition.

(Continued)

Warning (Continued)

Be ready to take action and apply the brakes. For more information, see *Defensive Driving* ⇨ *204*. Keep the windshield, headlamps, and FPB sensor clean and in good repair.

FPB can be set to Off, Alert, or Alert & Brake through vehicle personalization. See “Front Pedestrian Detection” in “Collision/Detection Systems” under *Vehicle Personalization* ⇨ *117*.

Detecting the Pedestrian Ahead

FPB alerts and automatic braking will not occur unless the FPB system detects a pedestrian. When a nearby pedestrian is detected in front of the vehicle, the pedestrian ahead indicator will display amber.

Front Pedestrian Alert

With Head-Up Display

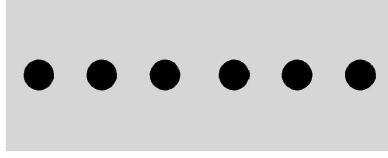

Without Head-Up Display

When the vehicle approaches a pedestrian ahead too rapidly, the red FPB alert display will flash on the windshield. Eight rapid high-pitched beeps will sound from the front, or both sides of the Safety Alert Seat will pulse five times. When this Pedestrian Alert occurs, the brake system may prepare for driver braking to occur more rapidly which can cause a brief, mild deceleration. Continue to apply the brake pedal as needed.

Cruise control may be disengaged when the Front Pedestrian Alert occurs.

Automatic Braking

If FPB detects it is about to crash into a pedestrian directly ahead, and the brakes have not been applied, FPB may automatically brake moderately or brake hard. This can help to avoid some very low speed pedestrian crashes or reduce pedestrian injury. FPB can automatically brake to detected pedestrians between 8 km/h (5 mph) and 80 km/h (50 mph). Automatic braking levels may be reduced under certain conditions, such as higher speeds. If also equipped with the Night Vision system, pedestrians detected by the Night Vision system will not cause automatic braking to occur.

If this happens, Automatic Braking may engage the Electric Parking Brake (EPB) to hold the vehicle at a stop. Release the EPB. A firm press of the accelerator pedal will also release Automatic Braking and the EPB.

⚠ Warning

FPB may alert or automatically brake the vehicle suddenly in situations where it is unexpected and undesired. It could falsely alert or brake for objects similar in shape or size to pedestrians, including shadows. This is normal operation and the vehicle does not need service. To override Automatic Braking, firmly press the accelerator pedal, if it is safe to do so.

Automatic Braking can be disabled through vehicle personalization. See "Front Pedestrian Detection" in "Collision/Detection Systems" under *Vehicle Personalization* ⇨ *117*.

⚠ Warning

Using the Front Pedestrian Braking system while towing a trailer could cause you to lose control of the vehicle and crash. Turn the system to Alert or Off when towing a trailer.

Cleaning the System

If FPB does not seem to operate properly, cleaning the outside of the windshield in front of the rearview mirror may correct the issue.

Side Blind Zone Alert (SBZA)

If equipped, the SBZA system is a lane-changing aid that assists drivers with avoiding crashes that occur with moving vehicles in the side blind zone, or blind spot areas. When the vehicle is in a forward gear, the left or right side mirror display will light up if a moving vehicle is detected in that blind zone. If the turn signal is activated and a vehicle is also detected on the same side, the display will flash as an extra warning not to change lanes. Since this system is part of the Lane Change Alert (LCA) system, read the entire LCA section before using this feature.

Lane Change Alert (LCA)

If equipped, the LCA system is a lane-changing aid that assists drivers with avoiding lane change crashes that occur with moving vehicles in the side blind zone (or spot) areas or with vehicles rapidly approaching these areas from behind. The LCA warning display will light up in the corresponding outside mirror and will flash if the turn signal is on.

⚠ Warning

LCA does not alert the driver to vehicles outside of the system detection zones, pedestrians, bicyclists, or animals. It may not provide alerts when changing lanes under all driving conditions. Failure to use proper care when changing lanes may result in injury, death, or vehicle damage. Before making a lane change, always check mirrors, glance over your shoulder, and use the turn signals.

LCA Detection Zones

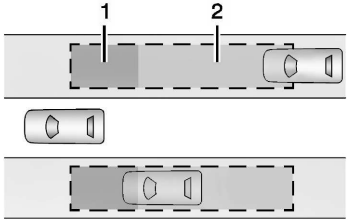

1. SBZA Detection Zone
2. LCA Detection Zone

The LCA sensor covers a zone of approximately one lane over from both sides of the vehicle, or 3.5 m (11 ft). The height of the zone is approximately between 0.5 m (1.5 ft) and 2 m (6 ft) off the ground. The Side Blind Zone Alert (SBZA) warning area starts at approximately the middle of the vehicle and goes back 5 m (16 ft). Drivers are also warned of vehicles rapidly approaching from up to 70 m (230 ft) behind the vehicle.

How the System Works

The LCA symbol lights up in the outside mirrors when the system detects a moving vehicle in the next lane over that is in the side blind zone or rapidly approaching that zone from behind. A lit LCA symbol indicates it may be unsafe to change lanes. Before making a lane change, check the LCA display, check mirrors, glance over your shoulder, and use the turn signals.

Left Outside Mirror Display

Right Outside Mirror Display

When the vehicle is started, both outside mirror LCA displays will briefly come on to indicate the system is operating. When the vehicle is in a forward gear, the left or right outside mirror display will light up if a moving vehicle is detected in the next lane over in that blind zone or rapidly approaching that zone. If the turn signal is activated in the same direction as a detected vehicle, this display will flash as an extra warning not to change lanes.

LCA can be disabled. When you disable LCA, Side Blind Zone Alert is also disabled. See “Collision/Detection Systems” under *Vehicle Personalization* ⇨ *117*. If LCA is disabled by the driver, the LCA mirror displays will not light up.

When the System Does Not Seem to Work Properly

The LCA system requires some driving for the system to calibrate to maximum performance. This calibration may occur more quickly if the vehicle is driving on a straight highway road with traffic and roadside objects (e.g., guardrails, barriers).

LCA displays may not come on when passing a vehicle quickly, for a stopped vehicle, or when towing a trailer. The LCA detection zones that extend back from the side of the vehicle do not move further back when a trailer is towed. Use caution while changing lanes when towing a

trailer. LCA may alert to objects attached to the vehicle, such as a trailer, bicycle, or object extending out to either side of the vehicle. Attached objects may also interfere with the detection of vehicles. This is normal system operation; the vehicle does not need service.

LCA may not always alert the driver to vehicles in the next lane over, especially in wet conditions or when driving on sharp curves. The system does not need to be serviced. The system may light up due to guardrails, signs, trees, shrubs, and other non-moving objects. This is normal system operation; the vehicle does not need service.

LCA may not operate when the LCA sensors in the left or right corners of the rear bumper are covered with mud, dirt, snow, ice, or slush, or in heavy rainstorms. For cleaning instructions, see "Washing the Vehicle" under *Exterior Care* ⇨ *370*. If the DIC still displays the system unavailable message after cleaning both sides of the vehicle toward the rear corners of the vehicle, see your dealer.

If the LCA displays do not light up when moving vehicles are in the side blind zone or are rapidly approaching this zone and the system is clean, the system may need service. Take the vehicle to your dealer.

Radio Frequency Information

See *Radio Frequency Statement* ⇨ *409*.

Lane Keep Assist (LKA)

If equipped, LKA may help avoid crashes due to unintentional lane departures. This system uses a camera to detect lane markings between 60 km/h (37 mph) and 180 km/h (112 mph). It may assist by gently turning the steering wheel if the vehicle approaches a detected lane marking. It may also provide a Lane Departure Warning (LDW) alert if the vehicle crosses a detected lane marking. LKA can be overridden by turning the steering wheel. This system is not intended to keep the vehicle centered in the lane. LKA will not assist and alert if the turn signal is active in the direction of lane departure, or if it detects that you are accelerating, braking or actively steering.

⚠ Warning

The LKA system does not continuously steer the vehicle. It may not keep the vehicle in the lane or give a Lane Departure Warning (LDW) alert, even if a lane marking is detected.

The LKA and LDW systems may not:

- Provide an alert or enough steering assist to avoid a lane departure or crash.
- Detect lane markings under poor weather or visibility conditions. This can occur if the windshield or headlamps are blocked by dirt, snow, or ice; if they are not in proper condition; or if the sun shines directly into the camera.
- Detect road edges.

(Continued)

Warning (Continued)

- Detect lanes on winding or hilly roads.

If LKA only detects lane markings on one side of the road, it will only assist or provide an LDW alert when approaching the lane on the side where it has detected a lane marking. Even with LKA and LDW, you must steer the vehicle. Always keep your attention on the road and maintain proper vehicle position within the lane, or vehicle damage, injury, or death could occur. Always keep the windshield, headlamps, and camera sensors clean and in good repair. Do not use LKA in bad weather conditions or on roads with unclear lane markings, such as construction zones.

⚠ Warning

Using LKA while towing a trailer or on slippery roads could cause loss of control of the vehicle and a crash. Turn the system off.

How the System Works

LKA uses a camera sensor installed on the windshield ahead of the rearview mirror to detect lane markings. It may provide brief steering assist if it detects an unintended lane departure. It may further provide an audible alert or the driver seat may pulse indicating that a lane marking has been crossed.

To turn LKA on and off, press on the center stack. If equipped, the indicator light on the button comes on when LKA is on and turns off when LKA is disabled.

When on, is white, if equipped, indicating that the system is not ready to assist. is green if LKA is ready to assist. LKA may assist by gently turning the steering wheel if the vehicle approaches a detected lane marking. is amber when assisting. It may also provide a Lane Departure Warning (LDW) alert by flashing amber if the vehicle crosses a detected lane marking. Additionally, there may be three beeps, or the driver seat may pulse three times, on the right or left, depending on the lane departure direction.

Take Steering

The LKA system does not continuously steer the vehicle. If LKA does not detect active driver steering, an alert and chime may be provided. Steer the vehicle to dismiss. LKA may become temporarily unavailable after repeated take steering alerts.

When the System Does Not Seem to Work Properly

The system performance may be affected by:

- Close vehicles ahead.
- Sudden lighting changes, such as when driving through tunnels.
- Banked roads.
- Roads with poor lane markings, such as two-lane roads.

If the LKA system is not functioning properly when lane markings are clearly visible, cleaning the windshield may help.

A camera blocked message may display if the camera is blocked. Some driver assistance systems may have reduced performance or not work at all. An LKA or LDW unavailable message may display if the systems are temporarily unavailable. This message could be due to a blocked camera. The LKA system does not need service. Clean the outside of the windshield behind the rearview mirror.

LKA assistance and/or LDW alerts may occur due to tar marks, shadows, cracks in the road, temporary or construction lane markings, or other road imperfections. This is normal system operation; the vehicle does not need service. Turn LKA off if these conditions continue.

Fuel

Top Tier Fuel

GM recommends the use of TOP TIER Detergent Gasoline to keep the engine clean, reduce engine deposits, and maintain optimal vehicle performance. Look for the TOP TIER Logo or see www.toptiergas.com for a list of TOP TIER Detergent Gasoline marketers and applicable countries.

TOP TIER
Detergent Gasoline

CATEGORIE SUPERIÉURE
Essences Détergentes

Recommended Fuel (LSY 2.0L L4 Turbo Engine)

Premium unleaded gasoline meeting ASTM specification D4814 with a posted octane rating of 93 — (R+M)/2 — is highly recommended for best performance and fuel economy. Unleaded gasoline with an octane rated as low as 87 can be used. Using unleaded gasoline rated below 93 octane, however, will lead to reduced acceleration and fuel economy. If knocking occurs, use a gasoline rated at 93 octane as soon as possible, otherwise, the engine could be damaged. If heavy knocking is heard when using gasoline with a 93 octane rating, the engine needs service.

Do not use any fuel labeled E85 or FlexFuel. Do not use gasoline with ethanol levels greater than 15% by volume.

Recommended Fuel (L3B 2.7L L4 Turbo Engine)

Use premium unleaded gasoline meeting ASTM specification D4814 with a posted octane rating of 93 — (R+M)/2. If unavailable, unleaded gasoline with a posted octane rating of 91 may be used, but with reduced performance and fuel economy. If the octane is less than 91, the engine could be damaged and the repairs would not be covered by the vehicle warranty. If heavy knocking is heard when using gasoline rated at 93 octane, the engine needs service.

Do not use any fuel labeled E85 or FlexFuel. Do not use gasoline with ethanol levels greater than 15% by volume.

Prohibited Fuels

Caution

Do not use fuels with any of the following conditions; doing so may damage the vehicle and void its warranty:

- For vehicles that are not FlexFuel, fuel labeled greater than 15% ethanol by volume, such as mid-level ethanol blends (16–50% ethanol), E85, or FlexFuel.
- Fuel with any amount of methanol, methylal, ferrocene, and aniline. These fuels can corrode metal fuel system parts or damage plastic and rubber parts.
- Fuel containing metals such as methylcyclopentadienyl manganese tricarbonyl (MMT), which can damage the emissions control system and spark plugs.
- Fuel with a posted octane rating of less than the recommended fuel. Using this fuel will lower

(Continued)

Caution (Continued)

fuel economy and performance, and may decrease the life of the emissions catalyst.

Fuels in Foreign Countries

The U.S., Canada, and Mexico post fuel octane ratings in anti-knock index (AKI). For fuel not to use in a foreign country, see *Prohibited Fuels* ⇨ *294*.

Fuel Additives

TOP TIER Detergent Gasoline is highly recommended for use with your vehicle. If your country does not have TOP TIER Detergent Gasoline, add ACDelco Fuel System Treatment Plus-Gasoline to the vehicle's gasoline fuel tank at every oil change or 15 000 km (9,000 mi), whichever occurs first. TOP TIER Detergent Gasoline and ACDelco Fuel System Treatment Plus-Gasoline will help keep your vehicle's engine fuel deposit free and performing optimally.

Filling the Tank

An arrow on the fuel gauge indicates which side of the vehicle the fuel door is on. See *Fuel Gauge* ⇨ *94*.

⚠ Warning

Fuel vapors and fuel fires burn violently and can cause injury or death.

Follow these guidelines to help avoid injuries to you and others:

- Read and follow all the instructions on the fuel pump island.
- Turn off the engine when refueling.
- Keep sparks, flames, and smoking materials away from fuel.
- Do not leave the fuel pump unattended.

(Continued)

Warning (Continued)

- Avoid using electronic devices while refueling.
- Do not re-enter the vehicle while pumping fuel.
- Keep children away from the fuel pump and never let children pump fuel.
- Before touching the fill nozzle, touch a metallic object to discharge static electricity from your body.
- Fuel can spray out if the fill nozzle is inserted too quickly. This spray can happen if the tank is nearly full, and is more likely in hot weather. Insert the fill nozzle slowly and wait for any hiss noise to stop before beginning to flow fuel.

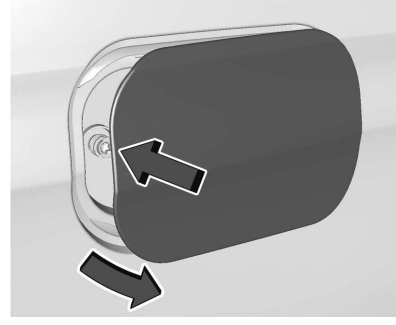

To open the fuel door, push and release the rearward center edge of the door.

The capless refueling system does not have a fuel cap. Fully insert and latch the fill nozzle, begin fueling.

⚠ Warning

Overfilling the fuel tank by more than three clicks of a standard fill nozzle may cause:

- Vehicle performance issues, including engine stalling and damage to the fuel system.

(Continued)

Warning (Continued)

- Fuel spills.
- Under certain conditions, fuel fires.

Be careful not to spill fuel. Wait five seconds after you have finished pumping before removing the fill nozzle. Clean fuel from painted surfaces as soon as possible. See *Exterior Care* ⇨ *370*. Push the fuel door closed until it latches.

⚠ Warning

If a fire starts while you are refueling, do not remove the fill nozzle. Shut off the flow of fuel by shutting off the pump or by notifying the station attendant. Leave the area immediately.

Filling the Tank with a Portable Fuel Container

If the vehicle runs out of fuel and must be filled from a portable fuel container:

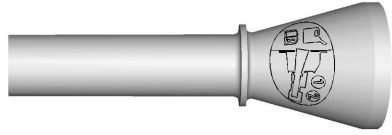

1. Locate the capless funnel adapter.
2. Insert and latch the funnel into the capless fuel system.

⚠ Warning

Attempting to refuel from a portable fuel container without using the funnel adapter may cause fuel spillage and damage the capless fuel system. This could cause a fire. You or others could be badly burned and the vehicle could be damaged.

3. Remove and clean the funnel adapter and return it to the storage location.

Filling a Portable Fuel Container

⚠ Warning

Never fill a portable fuel container while it is in the vehicle. Static electricity discharge from the container can ignite the fuel vapor. You or others could be badly burned and the vehicle could be damaged. To help avoid injury to you and others:

- Dispense fuel only into approved containers.
- Do not fill a container while it is inside a vehicle, in a vehicle's trunk, in a pickup bed, or on any surface other than the ground.
- Bring the fill nozzle in contact with the inside of the fill opening before operating the nozzle. Maintain contact until filling is complete.
- Keep sparks, flames, and smoking materials away from fuel.

(Continued)

Warning (Continued)

- Avoid using electronic devices while pumping fuel.

Trailer Towing

General Towing Information

Only use towing equipment that has been designed for the vehicle. Contact your dealer or trailering dealer for assistance with preparing the vehicle to tow a trailer. Read the entire section before towing a trailer. To tow a disabled vehicle, see *Towing the Vehicle* ⇨ *369*. To tow the vehicle behind another vehicle such as a motor home, see *Recreational Vehicle Towing* ⇨ *370*.

When towing with the 2.0L L4 engine, only use unleaded gasoline with an octane rating of 89 or higher. Using gasoline with a lower octane rating while towing may damage the engine and may not be covered by the vehicle warranty. See *Recommended Fuel (LSY 2.0L L4 Turbo Engine)* ⇨ *293* or *Recommended Fuel (L3B 2.7L L4 Turbo Engine)* ⇨ *294*.

Driving Characteristics and Towing Tips

⚠ Warning

You can lose control when towing a trailer if the correct equipment is not used or the vehicle is not driven properly. For example, if the trailer is too heavy or the trailer brakes are inadequate for the load, the vehicle may not stop as expected. You and others could be seriously injured. The vehicle may also be damaged, and the repairs would not be covered by the vehicle warranty. Pull a trailer only if all the steps in this section have been followed. Ask your dealer for advice and information about towing a trailer with the vehicle.

Driving with a Trailer

Trailering is different than just driving the vehicle by itself. Trailering means changes in handling, acceleration, braking, durability, and fuel economy. Successful, safe trailering takes correct equipment, and it has to be used properly.

The following information has many time-tested, important trailering tips and safety rules. Many of these are important for your safety and that of your passengers. Read this section carefully before pulling a trailer.

When towing a trailer:

- Become familiar with and follow all state and local laws that apply to trailer towing. These requirements vary from state to state.
- State laws may require the use of extended side view mirrors. Even if not required, you should install extended side view mirrors if your visibility is limited or restricted while towing.

- Do not tow a trailer during the first 800 km (500 mi) of vehicle use to prevent damage to the engine, axle, or other parts.
- It is recommended to perform the first oil change before heavy towing.
- During the first 800 km (500 mi) of trailer towing, do not drive over 80 km/h (50 mph) and do not make starts at full throttle.
- Vehicles can tow in D (Drive). If the transmission downshifts too often, a lower gear may be selected using Manual Mode. See *Manual Mode (Electronic Shifter)* ⇨ *235* or *Manual Mode (Mechanical Shifter)* ⇨ *234*.

If equipped, the following driver assistance features should be turned off when towing a trailer:

- Adaptive Cruise Control (ACC)
- Super Cruise Control
- Lane Keep Assist (LKA)
- Park Assist
- Automatic Parking Assist (APA)
- Reverse Automatic Braking (RAB)

If equipped, the following driver assistance features should be turned to alert or off when towing a trailer:

- Automatic Emergency Braking (AEB)
- Intelligent Brake Assist (IBA)
- Front Pedestrian Braking (FPB)

If equipped with Lane Change Alert (LCA), the LCA detection zones that extend back from the side of the vehicle do not move further back when a trailer is towed. Use caution while changing lanes when towing a trailer.

If equipped with Rear Cross Traffic Alert (RCTA), use caution while backing up when towing a trailer, as the RCTA detection zones that extend out from the back of the vehicle do not move further back when a trailer is towed.

⚠ Warning

To prevent serious injury or death from carbon monoxide (CO), when towing a trailer:

- Do not drive with the liftgate, trunk/hatch, or rear-most window open.
- Fully open the air outlets on or under the instrument panel.
- Adjust the climate control system to a setting that brings in only outside air. See “Climate Control Systems” in the Index.

For more information about carbon monoxide, see *Engine Exhaust* ⇨ *226*.

Towing a trailer requires experience. The combination of the vehicle and trailer is longer and not as responsive as the vehicle itself. Get used to the handling and braking of the combination by driving on a level road surface before driving on public roads.

The trailer structure, the tires, and the brakes must be all be rated to carry the intended cargo. Inadequate trailer equipment can cause the combination to operate in an unexpected or unsafe manner. Before driving, inspect all trailer hitch parts and attachments, safety chains, electrical connectors, lamps, tires, and mirrors. See *Towing Equipment* ⇨ *302*. If the trailer has electric brakes, start the combination moving and then manually apply the trailer brake controller to check the trailer brakes work. During the trip, occasionally check that the cargo and trailer are secure and that the lamps and any trailer brakes are working.

Towing with a Stability Control System

When towing, the stability control system might be heard. The system reacts to vehicle movement caused by the trailer, which mainly occurs during cornering. This is normal when towing heavier trailers.

Following Distance

Stay at least twice as far behind the vehicle ahead as you would when driving without a trailer. This can help to avoid heavy braking and sudden turns.

Passing

More passing distance is needed when towing a trailer. The combination of the vehicle and trailer will not accelerate as quickly and is much longer than the vehicle alone. It is necessary to go much farther beyond the passed vehicle before returning to the lane. Pass on level roadways. Avoid passing on hills if possible.

Backing Up

Hold the bottom of the steering wheel with one hand. To move the trailer to the left, move that hand to the left. To move the trailer to the right, move that hand to the right. Always back up slowly and, if possible, have someone guide you.

Making Turns

Caution

Turn more slowly and make wider arcs when towing a trailer to prevent damage to your vehicle. Making very sharp turns could cause the trailer to contact the vehicle.

Make wider turns than normal when towing, so trailer will not go over soft shoulders, over curbs, or strike road signs, trees, or other objects. Always signal turns well in advance. Do not steer or brake suddenly.

Driving on Grades

Reduce speed and shift to a lower gear before starting down a long or steep downhill grade. If the transmission is not shifted down, the brakes may overheat and result in reduced braking efficiency.

Vehicles can tow in D (Drive). Shift the transmission to a lower gear if the transmission shifts too often under heavy loads and/or hilly conditions.

When towing at higher altitudes, engine coolant will boil at a lower temperature than at lower altitudes. If the engine is turned off immediately after towing at high altitude on steep uphill grades, the vehicle could show signs similar to engine overheating. To avoid this, let the engine run, preferably on level ground, with the transmission in P (Park) for a few minutes before turning the engine off. If the overheat warning comes on, see *Engine Overheating* ⇨ *322*.

Parking on Hills

⚠ Warning

To prevent serious injury or death, always park your vehicle and trailer on a level surface when possible.

When parking your vehicle and your trailer on a hill:

1. Press the brake pedal, but do not shift into P (Park) yet. Turn the wheels into the curb if facing downhill or into traffic if facing uphill.
2. Have someone place chocks under the trailer wheels.
3. When the wheel chocks are in place, gradually release the brake pedal to allow the chocks to absorb the load of the trailer.
4. Reapply the brake pedal. Then apply the parking brake and shift into P (Park).
5. Release the brake pedal.

Leaving After Parking on a Hill

1. Apply and hold the brake pedal.
   - Start the engine.
   - Shift into a gear.
   - Release the parking brake.
2. Let up on the brake pedal.
3. Drive slowly until the trailer is clear of the chocks.
4. Stop and have someone pick up and store the chocks.

Maintenance when Trailer Towing

The vehicle needs service more often when used to tow trailers. See *Maintenance Schedule* ⇨ *380*. It is especially important to check the automatic transmission fluid, engine oil, axle lubricant, belts, cooling system, and brake system before and during each trip.

Check periodically that all nuts and bolts on the trailer hitch are tight.

Engine Cooling when Trailer Towing

The cooling system may temporarily overheat during severe operating conditions. See *Engine Overheating* ⇨ *322*.

Trailer Towing (LSY 2.0L L4 Engine)

Caution

Towing a trailer improperly can damage the vehicle and result in costly repairs not covered by the vehicle warranty. To tow a trailer correctly, follow the directions in this section and see your dealer for important information about towing a trailer with the vehicle.

Trailer Weight

⚠ Warning

Never exceed the towing capacity for your vehicle.

Safe trailering requires monitoring the weight, speed, altitude, road grades, outside temperature, dimensions of the front of the trailer, and how frequently the vehicle is used to tow a trailer.

Before towing a trailer, always separately weigh:

- the total weight on the vehicle's tires.
- the trailer.
- the trailer tongue.

⚠ Warning

You and others could be seriously injured or killed if the trailer is too heavy or the trailer brakes are inadequate for the load. The vehicle may be damaged, and the repairs would not be covered by the vehicle warranty.

(Continued)

Warning (Continued)

Only tow a trailer if all the steps in this section have been followed. Ask your dealer for advice and information about towing a trailer.

Gross Vehicle Weight Rating (GVWR)

For information about the vehicle's maximum load capacity, see *Vehicle Load Limits* ⇨ *214*. When calculating the GVWR with a trailer attached, the trailer tongue weight must be included as part of the weight the vehicle is carrying.

Maximum Trailer Weight

The trailer should never weigh more than 454 kg (1,000 lb). The maximum allowable weight of the trailer may be lower based on the weight of the passengers and cargo in your trailer.

The maximum trailer weight rating is calculated assuming only the driver is in the tow vehicle and it has all the required trailering equipment. The weight of additional optional equipment, passengers, and cargo in the tow vehicle must be subtracted from the maximum trailer weight.

Trailer Load Balance

The correct trailer load balance must be maintained to ensure trailer stability. Incorrect load balance is a leading cause of trailer sway.

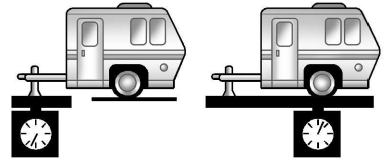

The trailer tongue weight (1) should be 10–15% of the loaded trailer weight (2). Some specific trailer types, such as boat trailers, fall outside of this range. Always refer to the trailer owner's manual for the recommended

trailer tongue weight for each trailer. Never exceed the maximum loads for your vehicle, hitch, and trailer.

After loading the trailer, separately weigh the trailer and then the trailer tongue and calculate the trailer load balance percentage to see if the weights and distribution are appropriate for your vehicle. If the trailer weight is too high, it may be possible to transfer some of the cargo into your vehicle. If the trailer tongue weight is too high or too low, it may be possible to rearrange some of the cargo inside of the trailer.

Do not exceed the maximum allowable tongue weight for your vehicle. Use the shortest hitch extension available to position the hitch ball closer to your vehicle. This will help reduce the effect of the trailer tongue weight on the trailer hitch and the rear axle.

If a cargo carrier is used in the trailer hitch receiver, choose a carrier that positions the load as close to the vehicle as possible. Make sure the total weight, including the carrier, is no more than half of the maximum allowable tongue weight for the vehicle or 227 kg (500 lb), whichever is less.

Ask your dealer for trailering information or assistance.

Towing Equipment

Hitches

Always use the correct hitch equipment for your vehicle. Crosswinds, large trucks going by, and rough roads can affect the trailer and the hitch.

Never attach rental hitches or other bumper-type hitches. Only use frame-mounted hitches that do not attach to the bumper.

Always seal any holes in your vehicle if the trailer hitch removed. If not sealed, dirt, water, and carbon monoxide (CO) from the exhaust may enter your vehicle. See *Engine Exhaust* ⇨ *226*.

Consider using mechanical sway controls with any trailer. Ask a trailering professional about sway controls or refer to the trailer manufacturer's recommendations and instructions.

Tires

- Do not tow a trailer while using a compact spare tire on the vehicle.
- Tires must be properly inflated to support loads while towing a trailer. See *Tires* ⇨ *339* for instructions on proper tire inflation.

Safety Chains

Always attach chains between the vehicle and the trailer, and attach the chains to the holes on the trailer hitch platform. Instructions about safety chains may be provided by the hitch manufacturer or by the trailer manufacturer.

Cross the safety chains under the tongue of the trailer to help prevent the tongue from contacting the road if it becomes separated from the hitch. Always leave just enough slack so the combination can turn. Never allow safety chains to drag on the ground.

Trailer Brakes

Loaded trailers over 450 kg (1,000 lb) must be equipped with brake systems and with brakes for each axle. Trailer braking equipment conforming to Canadian Standards Association (CSA) requirement CAN3-D313, or its equivalent, is recommended.

State or local regulations may require trailers to have their own braking system if the loaded weight of the trailer exceeds certain minimums that can vary from state to state. Read and follow the instructions for the trailer brakes so they are installed, adjusted, and maintained properly. Never attempt to tap into your vehicle's hydraulic brake system. If you do, both the vehicle anti-lock brakes and the trailer brakes may not function, which could result in a crash.

Trailer Lamps

Always check all trailer lamps are working at the beginning of each trip, and periodically on longer trips.

Turn Signals When Towing a Trailer

When properly connected, the trailer turn signals will illuminate to indicate the vehicle is turning, changing lanes, or stopping. When towing a trailer, the arrows on the instrument cluster will illuminate even if the trailer is not properly connected or the bulbs are burned out.

Conversions and Add-Ons

Add-On Electrical Equipment

⚠ Warning

The Data Link Connector (DLC) is used for vehicle service and Emission Inspection/Maintenance testing. See *Malfunction Indicator Lamp (Check Engine Light)* ⇨ *97*.
A device connected to the DLC — such as an aftermarket fleet or driver-behavior tracking device —

(Continued)

Warning (Continued)

may interfere with vehicle systems. This could affect vehicle operation and cause a crash. Such devices may also access information stored in the vehicle's systems.

Caution

Some electrical equipment can damage the vehicle or cause components to not work and would not be covered by the vehicle warranty. Always check with your dealer before adding electrical equipment.

Add-on equipment can drain the vehicle's 12-volt battery, even if the vehicle is not operating.

The vehicle has an airbag system. Before attempting to add anything electrical to the vehicle, see *Servicing the Airbag-Equipped Vehicle* ⇨ *57* and *Adding Equipment to the Airbag-Equipped Vehicle* ⇨ *58*.

Vehicle Care

General Information

General Information 305
California Proposition 65 Warning 305
California Perchlorate Materials Requirements 306
Accessories and Modifications 306

Vehicle Checks

Doing Your Own Service Work 306
Hood 307
Engine Compartment Overview 309
Engine Oil 312
Engine Oil Life System 314
Automatic Transmission Fluid 315
Engine Air Filter Life System 315
Engine Air Cleaner/Filter 316
Cooling System 317
Engine Overheating 322
Washer Fluid 323
Brakes 323
Brake Pad Life System (If Equipped) 324
Brake Fluid 325
Battery - North America 326
All-Wheel Drive 327
Park Brake and P (Park) Mechanism Check 327
Wiper Blade Replacement 327
Windshield Replacement 328
Gas Strut(s) 328

Headlamp Aiming

Front Headlamp Aiming 329

Bulb Replacement

Bulb Replacement 329
Halogen Bulbs 330
High Intensity Discharge (HID) Lighting 330
LED Lighting 330
Front Turn Signal Lamps 330

Electrical System

Electrical System Overload 330
Fuses and Circuit Breakers 331
Engine Compartment Fuse Block 332
Instrument Panel Fuse Block 334
Rear Compartment Fuse Block 337

Wheels and Tires

Tires 339
All-Season Tires 339
Winter Tires 340
Run-Flat Tires 340
Self-Sealing Tires 341
Low-Profile Tires 341
Summer Tires 341
Tire Sidewall Labeling 342
Tire Designations 343
Tire Terminology and Definitions 344
Tire Pressure 346
Tire Pressure for High-Speed Operation 347
Tire Pressure Monitor System ... 348
Tire Pressure Monitor Operation 349
Tire Inspection 352
Tire Rotation 352
When It Is Time for New Tires 353
Buying New Tires 354
Different Size Tires and Wheels 356
Uniform Tire Quality Grading ... 356
Wheel Alignment and Tire Balance 357

Wheel Replacement 357
Tire Chains 358
If a Tire Goes Flat 359
Tire Sealant and Compressor Kit 360
Storing the Tire Sealant and Compressor Kit 366

Jump Starting

Jump Starting - North America 366

Towing the Vehicle

Towing the Vehicle 369
Recreational Vehicle Towing 370

Appearance Care

Exterior Care 370
Interior Care 375
Floor Mats 377

General Information

For service and parts needs, visit your dealer. You will receive genuine GM parts and GM-trained and supported service people.

Genuine GM parts have one of these marks:

GM GENUINE PARTS

ACDelco

California Proposition 65 Warning

⚠ Warning

Most motor vehicles, including this one, as well as many of its service parts and fluids, contain and/or emit chemicals known to the State of California to cause cancer and birth defects or other reproductive harm. Engine exhaust, many parts and systems, many fluids, and some component wear by-products contain and/or emit these chemicals. For more information go to www.P65Warnings.ca.gov/passenger-vehicle.

See *Battery - North America* ⇨ *326* and *Jump Starting - North America* ⇨ *366* and the back cover.

California Perchlorate Materials Requirements

Certain types of automotive applications, such as airbag initiators, seat belt pretensioners, and lithium batteries contained in electronic keys, may contain perchlorate materials. Perchlorate Material – special handling may apply. See www.dtsc.ca.gov/hazardouswaste/perchlorate.

Accessories and Modifications

Adding non-dealer accessories or making modifications to the vehicle can affect vehicle performance and safety, including such things as airbags, braking, stability, ride and handling, emissions systems, aerodynamics, durability, and electronic systems like antilock brakes, traction control, and stability control. These accessories or modifications could even cause malfunction or damage not covered by the vehicle warranty.

Damage to suspension components caused by modifying vehicle height outside of factory settings will not be covered by the vehicle warranty.

Damage to vehicle components resulting from modifications or the installation or use of non-GM certified parts, including control module or software modifications, is not covered under the terms of the vehicle warranty and may affect remaining warranty coverage for affected parts.

GM Accessories are designed to complement and function with other systems on the vehicle. See your dealer to accessorize the vehicle using genuine GM Accessories installed by a dealer technician.

Also, see *Adding Equipment to the Airbag-Equipped Vehicle* ⇨ *58*.

Vehicle Checks

Doing Your Own Service Work

⚠ Warning

It can be dangerous to work on your vehicle if you do not have the proper knowledge, service manual, tools, or parts. Always follow owner's manual procedures and consult the service manual for your vehicle before doing any service work.

If doing some of your own service work, use the proper service manual. It tells you much more about how to service the vehicle than this manual can. To order the proper service manual, see *Publication Ordering Information* ⇨ *408*.

This vehicle has an airbag system. Before attempting to do your own service work, see *Servicing the Airbag-Equipped Vehicle* ⇨ *57*.

If equipped with remote vehicle start, open the hood before performing any service work to prevent remote starting the vehicle accidentally. See *Remote Vehicle Start* ⇨ *13*.

Keep a record with all parts receipts and list the mileage and the date of any service work performed. See *Maintenance Records* ⇨ *394*.

Caution

Even small amounts of contamination can cause damage to vehicle systems. Do not allow contaminants to contact the fluids, reservoir caps, or dipsticks.

Hood

⚠ Warning

For vehicles with auto engine stop/start, turn the vehicle off before opening the hood. If the vehicle is on, the engine will start when the hood is opened. You or others could be injured.

⚠ Warning

Components under the hood can get hot from running the engine. To help avoid the risk of burning unprotected skin, never touch these components until they have cooled, and always use a glove or towel to avoid direct skin contact.

Clear any snow from the hood before opening.

To open the hood:

1. Pull the hood release lever with the symbol. It is on the lower left side of the instrument panel.

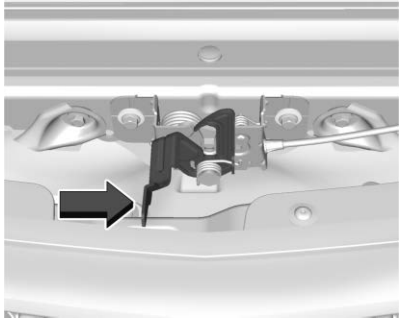

2. Go to the front of the vehicle and locate the secondary release lever under the front center of the hood. Push the secondary hood release lever to the right to release.
3. After you have partially lifted the hood, the gas strut system will automatically lift the hood and hold it in the fully open position.

To close the hood:

1. Before closing the hood, be sure all filler caps are on properly, and all tools are removed.
2. Pull the hood down until the strut system is no longer holding up the hood.
3. Lower the hood 20 cm (8 in) above the vehicle. Allow the hood to fall. Check to make sure the hood is latched completely. Repeat this process with additional force if necessary.

⚠ Warning

Do not drive the vehicle if the hood is not latched completely. The hood could open fully, block your vision, and cause a crash. You or others could be injured. Always close the hood completely before driving.

The Driver Information Center (DIC) will display a message if the hood is not fully closed.

Stop and turn off the vehicle, check the hood for obstructions, and close the hood again. Check to see if the message still appears on the DIC.

Engine Compartment Overview

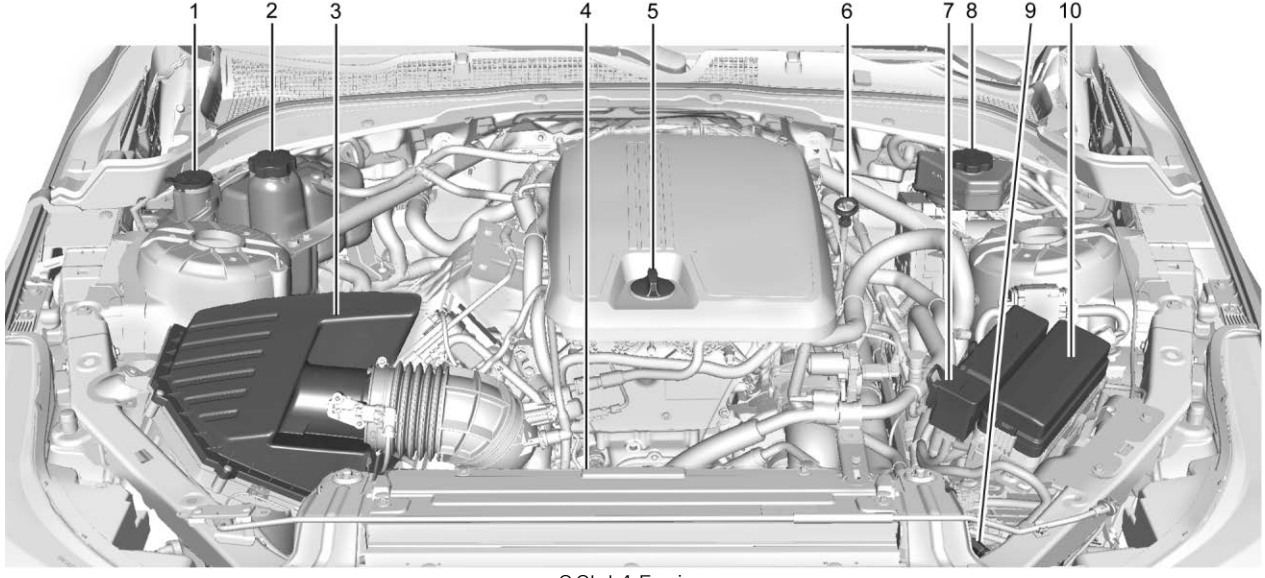

2.0L L4 Engine

1. Windshield Washer Fluid Reservoir. See *Washer Fluid* ⇨ *323*.
2. Engine Coolant Surge Tank and Pressure Cap. See *Cooling System* ⇨ *317*.
3. *Engine Air Cleaner/Filter* ⇨ *316*.
4. Engine Cooling Fan (Out of View). See *Cooling System* ⇨ *317*.
5. Engine Oil Fill Cap. See *Engine Oil* ⇨ *312*.
6. Engine Oil Dipstick. See *Engine Oil* ⇨ *312*.
7. Remote Positive (+) Battery Terminal. See *Jump Starting - North America* ⇨ *366*.
8. Brake Fluid Reservoir. See *Brake Fluid* ⇨ *325*.
9. Remote Negative (-) Battery Terminal. See *Jump Starting - North America* ⇨ *366*.
10. *Engine Compartment Fuse Block* ⇨ *332*.

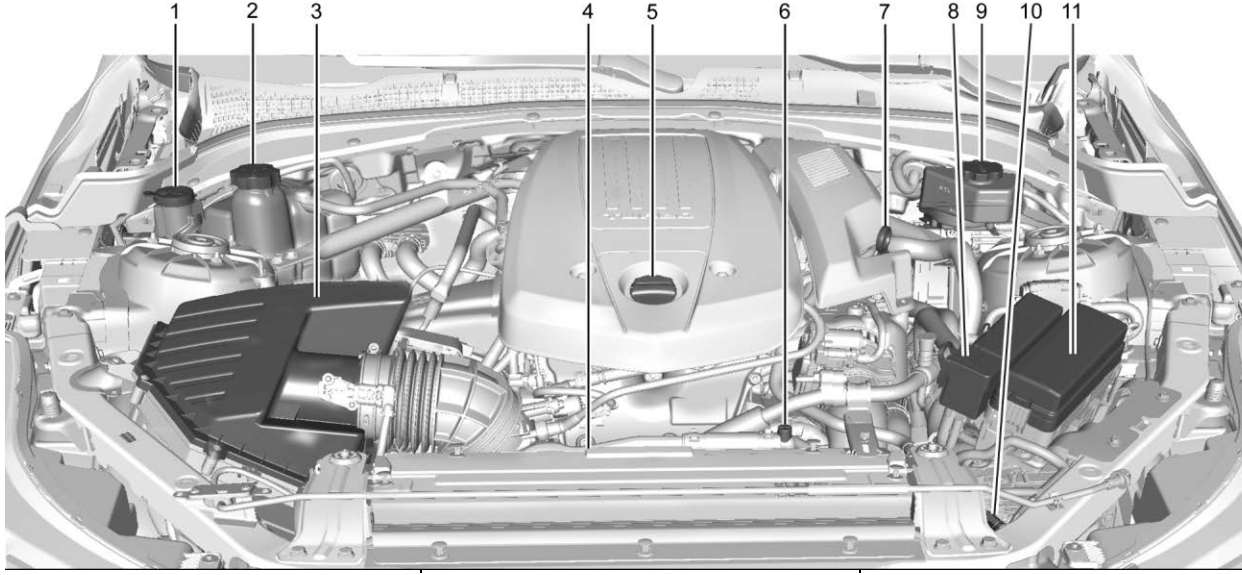

2.7L L4 Engine

1. Windshield Washer Fluid Reservoir. See *Washer Fluid* ⇨ *323*.
2. Engine Coolant Surge Tank and Pressure Cap. See *Cooling System* ⇨ *317*.
3. *Engine Air Cleaner/Filter* ⇨ *316*.
4. Engine Cooling Fan (Out of View). See *Cooling System* ⇨ *317*.
5. Engine Oil Fill Cap. See *Engine Oil* ⇨ *312*.
6. Cooling System Air Bleeder Cap. See *Cooling System* ⇨ *317*.
7. Engine Oil Dipstick. See *Engine Oil* ⇨ *312*.
8. Remote Positive (+) Battery Terminal. See *Jump Starting - North America* ⇨ *366*.

9. Brake Fluid Reservoir. See *Brake Fluid* ⇨ *325*.
10. Remote Negative (-) Battery Terminal. See *Jump Starting - North America* ⇨ *366*.
11. Engine Compartment Fuse Block. See *Engine Compartment Fuse Block* ⇨ *332*.

Engine Oil

To ensure proper engine performance and long life, careful attention must be paid to engine oil. Following these simple, but important steps will help protect your investment:

- Use engine oil approved to the proper specification and of the proper viscosity grade. See "Selecting the Right Engine Oil" in this section.
- Check the engine oil level regularly and maintain the proper oil level. See "Checking Engine Oil" and "When to Add Engine Oil" in this section.
- Change the engine oil at the appropriate time. See *Engine Oil Life System* ⇨ *314*.
- Always dispose of engine oil properly. See "What to Do with Used Oil" in this section.

Checking Engine Oil

Check the engine oil level regularly, every 650 km (400 mi), especially prior to a long trip. The engine oil dipstick handle is a loop. See *Engine Compartment Overview* ⇨ *309* for the location.

⚠ Warning

The engine oil dipstick handle may be hot; it could burn you. Use a towel or glove to touch the dipstick handle.

If a low oil Driver Information Center (DIC) message displays, check the oil level.

Follow these guidelines:

- To get an accurate reading, park the vehicle on level ground. Check the engine oil level after the engine has been off for at least two hours. Checking the engine oil level on steep grades or too soon after engine shutoff can result in incorrect readings. Accuracy improves when checking a cold engine prior to starting. Remove the dipstick and check the level.
- If unable to wait two hours, the engine must be off for at least 15 minutes if the engine is warm, or at least 30 minutes if the engine is not warm. Pull out the dipstick, wipe it with a clean paper towel or cloth, then push it back in all the way. Remove it again, keeping the tip down, and check the level.

When to Add Engine Oil

If the oil is below the cross-hatched area at the tip of the dipstick and the engine has been off for at least 15 minutes, add 1 L (1 qt) of the recommended oil and then recheck the level. See "Selecting the Right Engine Oil" later in this section for an

explanation of what kind of oil to use. For engine oil crankcase capacity, see *Capacities and Specifications* ⇨ *396*.

Caution

Do not add too much oil. Oil levels above or below the acceptable operating range shown on the dipstick are harmful to the engine. If the oil level is above the operating range (i.e., the engine has so much oil that the oil level gets above the cross-hatched area that shows the proper operating range), the engine could be damaged. Drain the excess oil or limit driving of the vehicle, and seek a service professional to remove the excess oil.

See *Engine Compartment Overview* ⇨ *309* for the location of the engine oil fill cap.

Add enough oil to put the level somewhere in the proper operating range. Push the dipstick all the way back in when finished.

Selecting the Right Engine Oil

Selecting the right engine oil depends on both the proper oil specification and viscosity grade. See *Recommended Fluids and Lubricants* ⇨ *391*.

Specification

Use full synthetic engine oils that meet the dexos1 specification. Engine oils that have been approved by GM as meeting the dexos1 specification are marked with the dexos1 approved logo. See www.gmdexos.com.

Caution

Failure to use the recommended engine oil or equivalent can result in engine damage not covered by the vehicle warranty.

Viscosity Grade

For the LSY 2.0L L4 turbo engine, use SAE 0W-20 viscosity grade engine oil.

For the L3B 2.7L L4 turbo engine, use SAE 5W-30 viscosity grade engine oil. Cold Temperature Operation: In an area of extreme cold, where the temperature falls below –29 °C (–20 ° F), an SAE 0W-30 oil may be used. An oil of this viscosity grade will provide easier cold starting for the engine at extremely low temperatures.

When selecting an oil of the appropriate viscosity grade, it is recommended to select an oil of the correct specification. See “Specification” earlier in this section.

Engine Oil Additives/Engine Oil Flushes

Do not add anything to the oil. The recommended oils meeting the dexos1 specification are all that is needed for good performance and engine protection.

Engine oil system flushes are not recommended and could cause engine damage not covered by the vehicle warranty.

What to Do with Used Oil

Used engine oil contains certain elements that can be unhealthy for your skin and could even cause cancer. Do not let used oil stay on your skin for very long. Clean your skin and nails with soap and water, or a good hand cleaner. Wash or properly dispose of clothing or rags containing used engine oil. See the manufacturer's warnings about the use and disposal of oil products.

Used oil can be a threat to the environment. If you change your own oil, be sure to drain all the oil from the filter before disposal. Never dispose of oil by putting it in the trash or pouring it on the ground, into sewers, or into streams or bodies of water. Recycle it by taking it to a place that collects used oil.

Engine Oil Life System

When to Change Engine Oil

This vehicle has a computer system that indicates when to change the engine oil and filter. This is based on a combination of factors which include engine revolutions, engine temperature, and miles driven. Based on driving conditions, the mileage at which an oil change is indicated can vary considerably. For the oil life system to work properly, the system must be reset every time the oil is changed.

When the system has calculated that oil life has been diminished, it indicates that an oil change is necessary. A CHANGE ENGINE OIL SOON message comes on. Change the oil as soon as possible within the next 1 000 km (600 mi). It is possible that, if driving under the best conditions, the oil life system might indicate that an oil change is not necessary for up to a year. The engine oil and filter must be changed at least once a year and at this time the system must be reset. Your dealer has trained service people who will perform this work and reset the system. It is also important to check the oil regularly over the course of an oil drain interval and keep it at the proper level.

If the system is ever reset accidentally, the oil must be changed at 5 000 km (3,000 mi) since the last oil change. Remember to reset the oil life system whenever the oil is changed.

How to Reset the Engine Oil Life System

Reset the system whenever the engine oil is changed so that the system can calculate the next engine oil change. To reset the system:

1. Using the DIC buttons, display REMAINING OIL LIFE on the DIC. See *Driver Information Center (DIC) (Base Level)* ⇨ *107* or *Driver Information Center (DIC) (Uplevel)* ⇨ *110*.
2. Press and hold the thumbwheel on the steering wheel. When the confirmation message displays, select YES. The oil life will change to 100%.

Be careful not to reset the oil life display accidentally at any time other than after the oil is changed. It cannot be reset accurately until the next oil change.

The oil life system can also be reset as follows:

1. Using the DIC buttons, display REMAINING OIL LIFE on the DIC. See *Driver Information Center (DIC) (Base Level)* ⇨ *107* or *Driver Information Center (DIC) (Uplevel)* ⇨ *110*.
2. Fully press and release the accelerator pedal three times within five seconds.

   If the CHANGE ENGINE OIL SOON message is not on, the system is reset.

The system is reset when the CHANGE ENGINE OIL SOON message is off.

If the CHANGE ENGINE OIL SOON message comes back on when the vehicle is started, the engine oil life system has not been reset. Repeat the procedure.

Automatic Transmission Fluid

How to Check Automatic Transmission Fluid

It is not necessary to check the transmission fluid level.
A transmission fluid leak is the only reason for fluid loss. If a leak occurs, take the vehicle to your dealer and have it repaired as soon as possible.

The vehicle is not equipped with a transmission fluid level dipstick. There is a special procedure for checking and changing the transmission fluid. Because this procedure is difficult, this should be done at the dealer. Contact your dealer for additional information.

Caution

Use of the incorrect automatic transmission fluid may damage the vehicle, and the damage may not be covered by the vehicle warranty. Always use the correct automatic

(Continued)

Caution (Continued)

transmission fluid. See *Recommended Fluids and Lubricants* ⇨ *391*.

Change the fluid and filter at the intervals listed in *Maintenance Schedule* ⇨ *380*, and be sure to use the fluid listed in *Recommended Fluids and Lubricants* ⇨ *391*.

Engine Air Filter Life System

If equipped, this feature provides the engine air filter's remaining life and best timing for a change. The timing to change an engine air filter depends on driving and environmental conditions.

When to Change the Engine Air Filter

When the Driver Information Center (DIC) displays a message to replace the engine air filter at the next oil change, follow this timing.

When the DIC displays a message to replace the engine air filter soon, replace the engine air filter at the earliest convenience.

The system must be reset after the engine air filter is changed.

If the DIC displays a message to check the engine air filter system, see your dealer.

How to Reset the Engine Air Filter Life System

To reset:

1. Place the vehicle in P (Park).
2. Display the Air Filter Life on the DIC. See *Driver Information Center (DIC) (Base Level)* ⇨ *107* or *Driver Information Center (DIC) (Uplevel)* ⇨ *110*.
3. Press > on the steering wheel, or press the trip odometer reset stem if the vehicle does not have DIC controls, to move to the Reset/Disable display area. Select Reset, then press the thumbwheel or press the reset stem for several seconds.
4. Press the thumbwheel or the reset stem to confirm the reset.

Engine Air Cleaner/Filter

The engine air cleaner/filter is in the engine compartment on the passenger side of the vehicle. See *Engine Compartment Overview* ⇨ *309*.

When to Inspect the Engine Air Cleaner/Filter

- For intervals on changing and inspecting the engine air filter, see *Maintenance Schedule* ⇨ *380*.
- If equipped with Engine Air Filter Life System, see *Engine Air Filter Life System* ⇨ *315*.
- If driving in very dusty areas, follow the engine air filter inspecting and changing intervals, see *Maintenance Schedule* ⇨ *380*.

How to Inspect/Replace the Engine Air Cleaner/Filter

Do not start the engine or have the engine running with the engine air cleaner/filter housing open. Before removing the engine air cleaner/filter, make sure that the engine air cleaner/filter housing and nearby components are free of dirt and debris.

Do not clean the engine air cleaner/filter or components with water or compressed air.

To inspect or replace the air cleaner/filter:

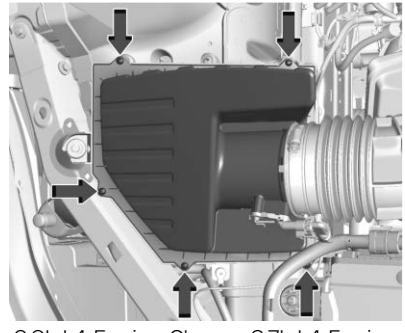

2.0L L4 Engine Shown, 2.7L L4 Engine Similar

1. Remove the five screws on top of the air cleaner/filter cover.
2. Lift the air/cleaner/filter cover away from the air cleaner/filter housing.
3. Pull out the air cleaner/filter.

⚠ Warning

If part replacement is necessary, the part must be replaced with one of the same part number or with an equivalent part. Use of a replacement part without the same fit, form, and function may result in personal injury or damage to the vehicle.

4. Inspect or replace the air cleaner/filter.
5. Reverse Steps 1–3 to reinstall the air cleaner/filter cover.
6. If equipped, reset the engine air filter life system after replacing the engine air filter. See *Engine Air Filter Life System* ⇨ *315*.

⚠ Warning

Operating the engine with the air cleaner/filter off can cause you or others to be burned. Use caution when working on the engine. Do not start the engine or drive the vehicle with the air cleaner/filter off, as flames may be present if the engine backfires.

Caution

If the air cleaner/filter is off, dirt can easily get into the engine, which could damage it. Always have the air cleaner/filter in place when driving.

Cooling System

The cooling system allows the engine to maintain the correct working temperature.

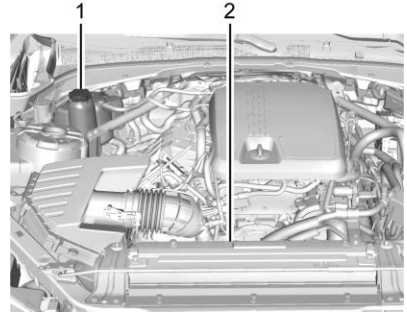

2.0L L4 Engine

1. Engine Coolant Surge Tank and Pressure Cap
2. Engine Cooling Fan (Out of View)

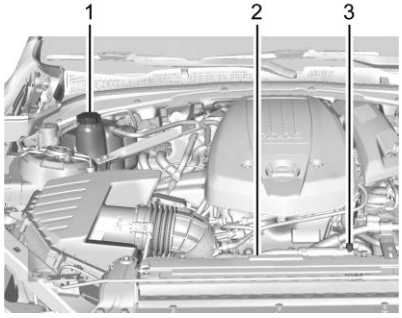

2.7L L4 Engine

1. Engine Coolant Surge Tank and Pressure Cap
2. Engine Cooling Fan (Out of View)
3. Cooling System Air Bleeder Cap

⚠ Warning

An underhood electric fan can start up even when the engine is not running and can cause injury. Keep hands, clothing, and tools away from any underhood electric fan.

⚠ Warning

Do not touch heater or radiator hoses, or other engine parts. They can be very hot and can burn you. Do not run the engine if there is a leak; all coolant could leak out. That could cause an engine fire and can burn you. Fix any leak before driving the vehicle.

Engine Coolant

The cooling system in the vehicle is filled with DEX-COOL engine coolant. See *Maintenance Schedule* ⇨ *380* and *Recommended Fluids and Lubricants* ⇨ *391*.

The following explains the cooling system and how to check and add coolant when it is low. If there is a problem with engine overheating, see *Engine Overheating* ⇨ *322*.

What to Use

⚠ Warning

Do not touch heater or radiator hoses, or other engine parts. They can be very hot and can burn you. Do not run the engine if there is a leak; all coolant could leak out. That could cause an engine fire and can burn you. Fix any leak before driving the vehicle.

Use a 50/50 mixture of clean drinkable water and DEX-COOL coolant. This mixture:

- Gives freezing protection down to -37 °C (-34 °F), outside temperature.
- Gives boiling protection up to 129 °C (265 °F), engine temperature.
- Protects against rust and corrosion.
- Will not damage aluminum parts.
- Helps keep the proper engine temperature.

Caution

Do not use anything other than a mix of DEX-COOL coolant that meets GM Standard GMW3420 and clean, drinkable water. Anything else can cause damage to the engine cooling system and the vehicle, which would not be covered by the vehicle warranty.

Never dispose of engine coolant by putting it in the trash, pouring it on the ground, or into sewers, streams, or bodies of water. Have the coolant changed by an authorized service center, familiar with legal requirements regarding used coolant disposal. This will help protect the environment and your health.

Checking Coolant

The vehicle must be on a level surface when checking the coolant level.

It is normal to see coolant moving in the upper coolant hose return line when the engine is running. It is also normal to see bubbles entering the surge tank through the small hose.

Check to see if coolant is visible in the coolant surge tank. If the coolant inside the coolant surge tank is boiling, do not do anything else until it cools down.

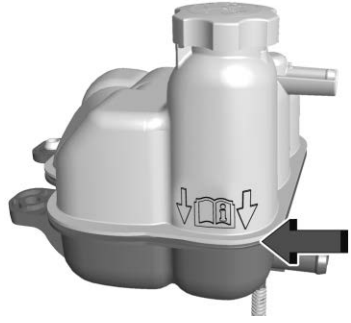

If coolant is visible but the coolant level is not at or above the indicated mark, add a 50/50 mixture of clean drinkable water and DEX-COOL coolant.

Be sure the cooling system is cool before this is done.

If no coolant is visible in the coolant surge tank, add coolant as follows:

How to Add Coolant to the Coolant Surge Tank

⚠ Warning

Spilling coolant on hot engine parts can burn you. Coolant contains ethylene glycol and it will burn if the engine parts are hot enough.

⚠ Warning

Plain water, or other liquids such as alcohol, can boil before the proper coolant mixture will. With plain water or the wrong mixture, the engine could get too hot but there would not be an overheat warning. The engine could catch fire and you or others could be burned.

⚠ Warning

Steam and scalding liquids from a hot cooling system are under pressure. Turning the pressure cap, even a little, can cause them to come out at high speed and you could be burned. Never turn the cap when the cooling system, including the pressure cap, is hot. Wait for the cooling system and pressure cap to cool.

Caution

Failure to follow the specific coolant fill procedure could cause the engine to overheat and could cause system damage. If coolant is not visible in the surge tank, contact your dealer.

If no problem is found, check to see if coolant is visible in the coolant surge tank. If coolant is visible but the coolant level is not at or above the indicated mark, add a 50/50 mixture of clean, drinkable water and DEX-COOL coolant at the coolant surge tank, but be sure the cooling system, including the coolant surge tank pressure cap, is cool before you do it.

2.0L L4 Engine

Automatic Coolant Service Fill Instructions

The vehicle is equipped with a service feature that assists with filling and removing air from the cooling system after service of components or when coolant is added after being to low.

To use this feature:

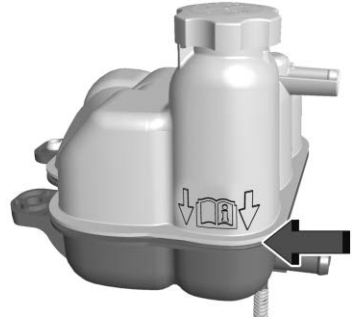

1. With a cold system, add coolant to the indicated line on the surge tank.
2. Replace the pressure cap on the surge tank.
3. Activate the service feature:
   3.1. Connect the vehicle to a battery charger.
   3.2. Turn the ignition to Service Mode. See *Ignition Positions* ⇨ *219*.
   3.3. Turn off the air conditioning.
   3.4. Set the parking brake.

3.5. At the same time, press the accelerator and the brake pedal for two seconds, then release.

3.6. At the end of the cycle, check the coolant level in the surge tank and add coolant if it is below the indicated line. Turn the ignition off, allow the Electronic Control Module (ECM) to go to sleep, about two minutes, and repeat Steps 3.2 – 3.6.

Listen for pump activation and movement of the control valves while watching the level of the coolant in the surge tank. If the tank empties, turn the ignition off, carefully remove the pressure cap, refill to the indicated line, replace the pressure cap, and repeat steps 3.2 – 3.6.

The fill and air removal process will run for approximately 15 minutes.

Caution

If the pressure cap is not tightly installed, coolant loss and engine damage may occur. Be sure the cap is properly and tightly secured.

2.7L L4 Engine

Automatic Coolant Service Fill Instructions

The vehicle is equipped with a service feature that assists with filling and removing air from the cooling system after service of components or when coolant is added after being to low.

To use this feature:

1. With a cold system unscrew the cooling system air bleeder cap. If coolant can be seen through the bleeder move to Step 3.
2. Add coolant through the surge tank until it is visible through the air bleeder.
3. Replace the cooling system air bleeder cap.
4. Add coolant to the indicated line on the surge tank.
5. Replace the pressure cap on the surge tank.
6. Activate the service feature:

   6.1. Connect the vehicle to a battery charger.

   6.2. Turn the ignition to Service Mode. See *Ignition Positions* ⇨ *219*.

   6.3. Turn off the air conditioning.

   6.4. Set the parking brake.

   6.5. At the same time, press the accelerator and the brake pedal for two seconds, then release.

   6.6. At the end of the cycle, check the coolant level in the surge tank and add coolant if it is below the indicated line. Turn the ignition off, carefully remove the pressure cap, refill to the indicated line, replace the pressure cap, and repeat steps 6.2 – 6.6.

Listen for pump activation and movement of the control valves while watching the level of the coolant in the surge tank. If the tank empties, turn the ignition off, carefully remove

the pressure cap, refill to the indicated line, replace the pressure cap, and repeat steps 6.2 – 6.6.

The fill and air removal process will run for approximately 15 minutes.

Caution

If the pressure cap is not tightly installed, coolant loss and engine damage may occur. Be sure the cap is properly and tightly secured.

Engine Overheating

The vehicle has an indicator to warn of the engine overheating.

If the decision is made not to lift the hood when this warning appears, get service help right away. See *Roadside Service* ⇨ *403*.

If the decision is made to lift the hood, make sure the vehicle is parked on a level surface.

Then check to see if the engine cooling fan is running. If the engine is overheating, the fan should be running. If it is not, do not continue to run the engine. Have the vehicle serviced.

Caution

Do not run the engine if there is a leak in the engine cooling system. This can cause a loss of all coolant and can damage the system and vehicle. Have any leaks fixed right away.

If Steam Is Coming from the Engine Compartment

⚠ Warning

Steam and scalding liquids from a hot cooling system are under pressure. Turning the pressure cap, even a little, can cause them to come out at high speed and you could be burned. Never turn the cap when the cooling system, including the pressure cap, is hot. Wait for the cooling system and pressure cap to cool.

If No Steam Is Coming from the Engine Compartment

If an engine overheat warning is displayed but no steam can be seen or heard, the problem may not be too serious. Sometimes the engine can get a little too hot when the vehicle:

- Climbs a long hill on a hot day.
- Stops after high-speed driving.
- Idles for long periods in traffic.

If the overheat warning is displayed with no sign of steam:

1. Turn the air conditioning off.
2. Turn the heater on to the highest temperature and to the highest fan speed. Open the windows as necessary.
3. When it is safe to do so, pull off the road, shift to P (Park) or N (Neutral) and let the engine idle.

If the overheat warning no longer displays, the vehicle can be driven. Continue to drive the vehicle slowly for about 10 minutes. Keep a safe vehicle distance from the vehicle in front. If the warning does not come

back on, continue to drive normally and have the cooling system checked for proper fill and function.

If the warning continues, pull over, stop, and park the vehicle right away.

If there is no sign of steam, idle the engine for three minutes while parked. If the warning is still displayed, turn off the engine until it cools down.

Washer Fluid

What to Use

When windshield washer fluid is needed, be sure to read the manufacturer's instructions before use. If operating the vehicle in an area where the temperature may fall below freezing, use a fluid that has sufficient protection against freezing.

Adding Washer Fluid

Open the cap with the washer symbol on it. Add washer fluid until the tank is full. See *Engine Compartment Overview* ⇨ *309* for reservoir location.

Caution

- Do not use washer fluid that contains any type of water repellent coating. This can cause the wiper blades to chatter or skip.
- Do not use engine coolant (antifreeze) in the windshield washer. It can damage the windshield washer system and paint.
- Do not mix water with ready-to-use washer fluid. Water can cause the solution to freeze and damage the washer fluid tank and other parts of the washer system.
- When using concentrated washer fluid, follow the manufacturer instructions for adding water.

(Continued)

Caution (Continued)

- Fill the washer fluid tank only three-quarters full when it is very cold. This allows for fluid expansion if freezing occurs, which could damage the tank if it is completely full.

Brakes

Disc brake linings have built-in wear indicators that make a high-pitched warning sound when the brake linings are worn and new linings are needed. The sound can come and go or can be heard all the time when the vehicle is moving, except when applying the brake pedal firmly.

⚠ Warning

The brake wear warning sound means that soon the brakes will not work well. That could lead to a crash. When the brake wear warning sound is heard, have the vehicle serviced.

Caution

Continuing to drive with worn-out brake linings could result in costly brake repairs.

Some driving conditions or climates can cause a brake squeal when the brakes are first applied, clearing up following several applications. This does not mean something is wrong with the brakes.

Properly torqued wheel nuts are necessary to help prevent brake pulsation. When tires are rotated, inspect brake linings for wear and evenly tighten wheel nuts in the proper sequence to torque specifications. See *Capacities and Specifications* ⇨ *396*.

Brake pads should be replaced as complete axle sets.

Brake Pedal Travel

See your dealer if the brake pedal does not return to normal height, or if there is a rapid increase in pedal travel. This could be a sign that brake service may be required.

Replacing Brake System Parts

Always replace brake system parts with new, approved replacement parts. If this is not done, the brakes may not work properly. The braking performance can change in many ways if the wrong brake parts are installed or if parts are improperly installed.

Brake Pad Life System (If Equipped)

When to Change Brake Pads

This vehicle has a system that estimates the remaining life of the front and rear brake pads. Brake pad life is displayed in the Driver Information Center (DIC), along with a percentage for each axle. The system must be reset every time the brake pads are changed.

When the system has determined that the brake pads need to be replaced, a message will display, which may include mileage remaining.

Brake pads should always be replaced as complete axle sets.

How to Reset the Brake Pad Life System

The system will automatically detect when significantly worn brake pads and sensors are replaced. When the ignition is turned on after new pads and sensors are installed, a message will display. Follow the prompts to reset the system.

The brake pad life system can also be manually reset:

1. Display Brake Pad Life on the DIC. See *Driver Information Center (DIC) (Base Level)* ⇨ *107* or *Driver Information Center (DIC) (Uplevel)* ⇨ *110*.
2. Press the thumbwheel. Select front or rear pads as appropriate.
3. Select YES on the confirmation message. Repeat for pads on the other axle if they were also replaced.

How to Disable the Brake Pad Life System

The brake pad life system can be turned off. This may be necessary if aftermarket brake pads without wear sensors are installed. When the system is turned off, the front and rear brake pad life percentages will not display. However, the built-in wear indicators that make a high-pitched warning sound when the brake pads are worn can still determine when the pads should be replaced. See *Brakes* ⇨ *323*.

To turn off the brake pad life system:

1. Display Brake Pad Life on the DIC. See *Driver Information Center (DIC) (Base Level)* ⇨ *107* or *Driver Information Center (DIC) (Uplevel)* ⇨ *110*.
2. Select DISABLE.

To turn the brake pad life system back on, follow the above steps but select ENABLE in Step 2.

Brake Fluid

The brake master cylinder reservoir is filled with GM approved DOT 4 brake fluid as indicated on the reservoir cap. See *Engine Compartment Overview* ⇨ *309* for the location of the reservoir.

Checking Brake Fluid

With the vehicle in P (Park) on a level surface, the brake fluid level should be between the minimum and maximum marks on the brake fluid reservoir.

There are only two reasons why the brake fluid level in the reservoir may go down:

- Normal brake lining wear. When new linings are installed, the fluid level goes back up.
- A fluid leak in the brake hydraulic system. Have the brake hydraulic system fixed. With a leak, the brakes will not work well.

Always clean the brake fluid reservoir cap and the area around the cap before removing it.

Do not top off the brake fluid. Adding fluid does not correct a leak. If fluid is added when the linings are worn, there will be too much fluid when new brake linings are installed. Add or remove fluid, as necessary, only when work is done on the brake hydraulic system.

⚠ Warning

If too much brake fluid is added, it can spill on the engine and burn, if the engine is hot enough. You or others could be burned, and the vehicle could be damaged. Add brake fluid only when work is done on the brake hydraulic system.

When the brake fluid falls to a low level, the brake warning light comes on. See *Brake System Warning Light* ⇨ *99*.

Brake fluid absorbs water over time which degrades the effectiveness of the brake fluid. Replace brake fluid at the specified intervals to prevent increased stopping distance. See *Maintenance Schedule* ⇨ *380*.

What to Add

Use only GM approved DOT 4 brake fluid from a clean, sealed container. See *Recommended Fluids and Lubricants* ⇨ *391*.

⚠ Warning

The wrong or contaminated brake fluid could result in damage to the brake system. This could result in the loss of braking leading to a possible injury. Always use the proper GM approved brake fluid.

Caution

If brake fluid is spilled on the vehicle's painted surfaces, the paint finish can be damaged. Immediately wash off any painted surface.

Battery - North America

The original equipment battery is maintenance free. Do not remove the cap and do not add fluid.

Refer to the replacement number shown on the original battery label when a new battery is needed.

The vehicle has an Absorbed Glass Mat (AGM) 12-volt battery. Installation of a standard 12-volt battery will result in reduced 12-volt battery life.

When using a 12-volt battery charger on the 12-volt AGM battery, some chargers have an AGM battery setting on the charger. If available, use the AGM setting on the charger, to limit charge voltage to 14.8 volts. Follow the charger manufacturer's instructions.

Stop/Start System

This vehicle has a Stop/Start system to shut off the engine to help conserve fuel. See *Stop/Start System* ⇨ *221*.

⚠ Warning

WARNING: Battery posts, terminals, and related accessories contain lead and lead compounds, chemicals known to the State of California to cause cancer and birth defects or other reproductive harm. Batteries also contain other chemicals known to the State of California to cause cancer. **WASH HANDS AFTER HANDLING.** For more information go to www.P65Warnings.ca.gov/passenger-vehicle.

See *California Proposition 65 Warning* ⇨ *305* and the back cover.

Vehicle Storage

⚠ Warning

Batteries have acid that can burn you and gas that can explode. You can be badly hurt if you are not

(Continued)

Warning (Continued)

careful. See *Jump Starting - North America* ⇨ *366* for tips on working around a battery without getting hurt.

Infrequent Usage: Remove the black, negative (-) cable from the battery to keep the battery from running down.

Extended Storage: Remove the black, negative (-) cable from the battery or use a battery trickle charger.

All-Wheel Drive

If the vehicle is equipped with All-Wheel-Drive (AWD), this is an additional system that needs lubrication.

Transfer Case

Under normal driving conditions, transfer case fluid does not require maintenance unless there is a fluid leak or unusual noise. If required, have the transfer case serviced by your dealer.

Park Brake and P (Park) Mechanism Check

⚠ Warning

When you are doing this check, the vehicle could begin to move. You or others could be injured and property could be damaged. Make sure there is room in front of the vehicle in case it begins to roll. Be ready to apply the regular brake at once should the vehicle begin to move.

Park on a fairly steep hill, with the vehicle facing downhill. Keeping your foot on the regular brake, set the parking brake.

- To check the parking brake's holding ability: With the engine running and the transmission in N (Neutral), slowly remove foot pressure from the regular brake pedal. Do this until the vehicle is held by the parking brake only.
- To check the P (Park) mechanism's holding ability: With the engine running, shift to P (Park). Then release the parking brake followed by the regular brake.

Contact your dealer if service is required.

Wiper Blade Replacement

Windshield wiper blades should be inspected for wear and cracking. See *Maintenance Schedule* ⇨ *380*.

Replacement blades come in different types and are removed in different ways. For proper type and length, see *Maintenance Replacement Parts* ⇨ *392*.

Caution

Allowing the wiper arm to touch the windshield when no wiper blade is installed could damage the windshield. Any damage that occurs would not be covered by the vehicle warranty. Do not allow the wiper arm to touch the windshield.

To replace the windshield wiper blade:

1. Pull the windshield wiper assembly away from the windshield.

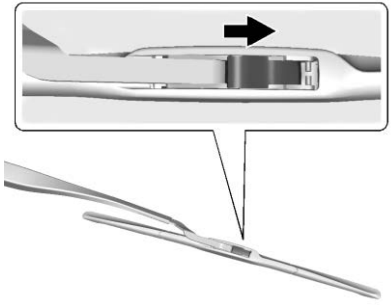

2. Lift up on the latch in the middle of the wiper blade where the wiper arm attaches.
3. With the latch open, pull the wiper blade down toward the windshield far enough to release it from the J-hooked end of the wiper arm.
4. Remove the wiper blade.
5. Reverse Steps 1–3 for wiper blade replacement.

Windshield Replacement

HUD System

The windshield is part of the HUD system. If the windshield needs to be replaced, be sure to get one that is designed for HUD or the HUD image may look out of focus.

Driver Assistance Systems

If the windshield needs to be replaced and the vehicle is equipped with a front camera sensor for the Driver Assistance Systems, a GM replacement windshield is recommended. The replacement windshield must be installed according to GM specifications for proper alignment. If it is not, these systems may not work properly, they may display messages, or they may not work at all. See your dealer for proper windshield replacement.

Acoustic Windshield

The vehicle is equipped with an acoustic windshield. If the windshield needs to be replaced be sure to get an acoustic windshield so you will continue to have the benefits an acoustic windshield can provide.

Gas Strut(s)

This vehicle is equipped with gas strut(s) to provide assistance in lifting and holding open the hood/trunk/liftgate system in full open position.

⚠ Warning

If the gas struts that hold open the hood, trunk, and/or liftgate fail, you or others could be seriously injured. Take the vehicle to your dealer for service immediately. Visually inspect the gas struts for signs of wear, cracks, or other damage periodically. Check to make sure the hood/trunk/liftgate is held open with enough force. If struts are failing to hold the hood/trunk/liftgate, do not operate. Have the vehicle serviced.

Caution

Do not apply tape or hang any objects from gas struts. Also do not push down or pull on gas struts. This may cause damage to the vehicle.

See *Maintenance Schedule* ⇨ *380*.

Hood

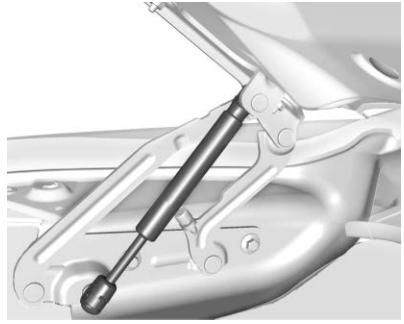

Trunk

Liftgate

Headlamp Aiming

Front Headlamp Aiming

Headlamp aim has been preset and should need no further adjustment.

If the vehicle is damaged in a crash, the headlamp aim may be affected. If adjustment to the headlamps is necessary, see your dealer.

Bulb Replacement

For the proper type of replacement bulbs, or any bulb changing procedure not listed in this section, contact your dealer.

Caution

Do not replace incandescent bulbs with aftermarket LED replacement bulbs. This can cause damage to the vehicle electrical system.

Halogen Bulbs

⚠ Warning

Halogen bulbs have pressurized gas inside and can burst if you drop or scratch the bulb. You or others could be injured. Be sure to read and follow the instructions on the bulb package.

High Intensity Discharge (HID) Lighting

⚠ Warning

The High Intensity Discharge (HID) lighting system operates at a very high voltage. If you try to service any of the system components, you could be seriously injured. Have your dealer or a qualified technician service them.

After an HID headlamp bulb has been replaced, the beam might be a slightly different shade than it was originally. This is normal.

LED Lighting

This vehicle has several LED lamps. For replacement of any LED lighting assembly, contact your dealer.

Front Turn Signal Lamps

Uplevel

See your dealer for turn signal replacement.

Base level

To replace one of these lamps:

1. Open the hood.
2. If your vehicle is equipped with a beauty cover, remove the beauty cover to get access to the bulb.

3. Turn the bulb socket counterclockwise to remove it from the headlamp assembly.
4. Unplug the electrical connector from the bulb by releasing the clip on the connector.
5. Replace the bulb and reverse Steps 1–4 to reinstall.

Electrical System

Electrical System Overload

The vehicle has fuses and circuit breakers to protect against an electrical system overload.

When the electrical load is too heavy a circuit breaker opens, protecting the circuit until overcurrent condition is removed. This greatly reduces the chance of circuit overload and fire caused by electrical problems.

Fuses and circuit breakers protect electrical devices in the vehicle.

Replace a blown or open fuse with a new one of the identical size and rating.

If there is a problem on the road and a fuse needs to be replaced, the same amperage fuse can be borrowed. Choose some feature of the vehicle that is not needed to use and replace it as soon as possible.

Headlamp Wiring

An electrical overload may cause the lamps to go on and off, or in some cases to remain off. Have the headlamp wiring checked right away if the lamps go on and off or remain off.

Windshield Wipers

If the wiper motor overheats due to heavy snow or ice, the windshield wipers will stop. Wiper function is available immediately after the wiper switch is set to off, and back to on.

To protect the wiper motor from overheating, the wipers may slow down when the windshield is dry for a long period of time. If a period of dry operation, or little moisture, exceeds 10 minutes, the wipers may switch to intermittent operation, and remain there. When moisture is again detected on the windshield, wiper operation will return to the operator selected speed.

Although the circuit is protected from electrical overload, overload due to heavy snow or ice may cause wiper linkage damage. Always clear ice and heavy snow from the windshield before using the windshield wipers.

If the overload is caused by an electrical problem and not snow or ice, be sure to get it fixed.

Fuses and Circuit Breakers

The wiring circuits in the vehicle are protected from short circuits by a combination of fuses and circuit breakers. This greatly reduces the chance of damage caused by electrical problems.

⚠ Danger

Fuses and circuit breakers are marked with their ampere rating. Do not exceed the specified amperage rating when replacing fuses and circuit breakers. Use of an oversized fuse or circuit breaker can result in a vehicle fire. You and others could be seriously injured or killed.

⚠ Warning

Installation or use of fuses that do not meet GM's original fuse specifications is dangerous. The fuses could fail, and result in a fire. You or others could be injured or killed, and the vehicle could be damaged.

See *Accessories and Modifications* ⇨ *306* and *General Information* ⇨ *305*.

To check a fuse, look at the silver-colored band inside the fuse. If the band is broken or melted, replace the fuse. Be sure to replace a bad fuse with a new one of the identical size and rating.

Fuses of the same amperage can be temporarily borrowed from another fuse location, if a fuse goes out. Replace the fuse as soon as possible.

Engine Compartment Fuse Block

The engine compartment fuse block is on the driver side of the engine compartment.

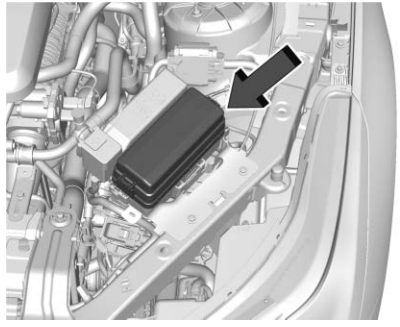

Lift the fuse block cover to access the fuses.

The vehicle may not be equipped with all of the fuses and relays shown.

Caution

Spilling liquid on any electrical component on the vehicle may damage it. Always keep the covers on any electrical component.

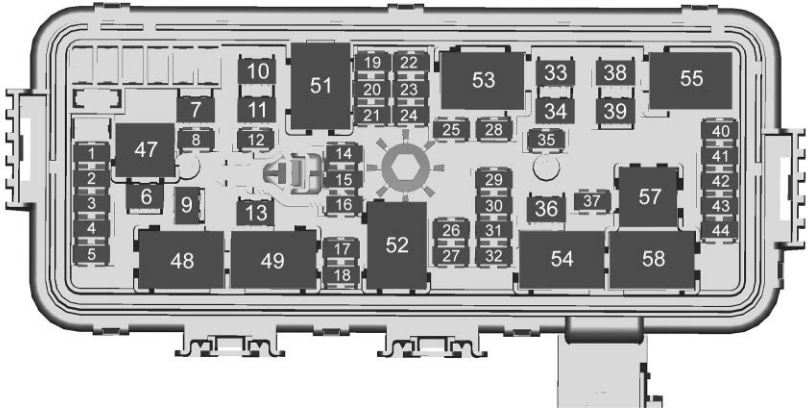

Fuses	Usage
1	Long range radar front sensor
2	Park/Daytime running lamps
3	Exterior lighting module 4
4	Exterior lighting module 7
5	Headlamp level

Fuses	Usage
6	–
7	Electronic brake control module
8	Washer pump
9	–
10	–
11	–
12	Horn

Fuses	Usage
13	Front wiper
14	Exterior lighting module 6
15	Exterior lighting module 1
16	Exterior lighting module 5
17	Exterior lighting module 3
18	Aero shutter
19	–
20	–
21	Virtual key system/ Power sounder module
22	Engine control module
23	Transmission control module/Transmission reverse lock out
24	Active engine mount
25	–

Fuses	Usage
26	Engine control module
27	Injectors/Ignition 2
28	Charged air cooler
29	Transmission aux oil pump/Transmission reverse lock out
30	Injectors/Ignition 1
31	Emissions 1
32	Emissions 2
33	Starter solenoid
34	–
35	–
36	Starter pinion
37	AC clutch
38	–
39	–
40	–
41	–
42	Water pump
43	–
44	–

Relays	Usage
47	–
48	Front wiper speed
49	Front wiper control
51	–
52	Engine control module
53	Starter solenoid
54	Starter pinion
55	–
57	AC clutch
58	–

Instrument Panel Fuse Block

The instrument panel fuse block is in the end of the driver side of the instrument panel.

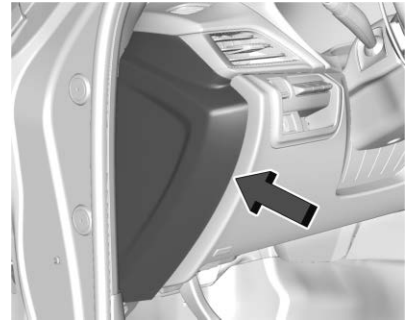

To access the fuses, remove the end panel by gently prying with a plastic tool near each clip, beginning at the point shown.

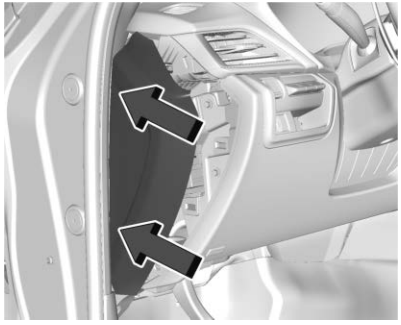

To install the end cover, insert the tabs on the back of the cover into the slots in the instrument panel at the points shown. Align the clips with the slots in the instrument panel, and press the cover into place.

The vehicle may not be equipped with all of the fuses and relays shown.

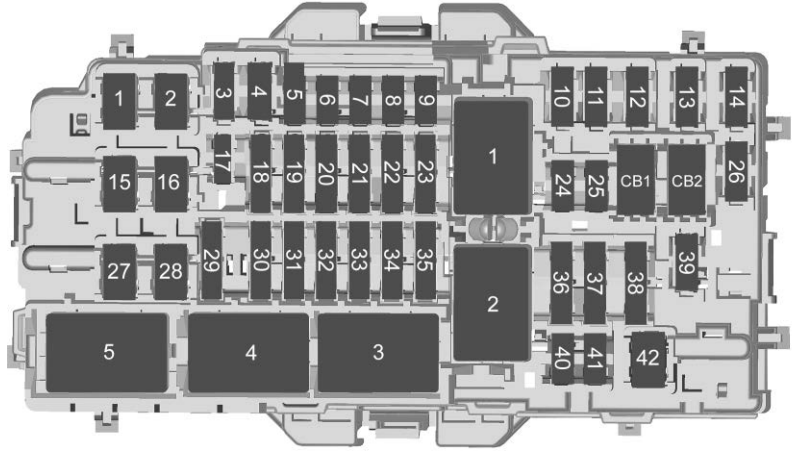

Fuses	Usage
1	–
2	HVAC blower
3	–
4	–
5	Theft deterrent/ Universal garage door opener/Overhead console/Rain sensor

Fuses	Usage
6	–
7	Air quality ionizer
8	Heated steering wheel
9	–
10	Electronic steering column lock 1
11	–
12	–

Fuses	Usage
13	–
14	–
15	–
16	–
17	–
18	Display/Infotainment/ USB/Multi-function control module
19	Airbag/ Automatic occupant sensing / Data link connection/ Wireless charging module/ Virtual key module
20	Power steering column module/ Electronic steering column lock 2
21	Driver monitor system/Performance data recorder
22	–
23	–
24	–

Fuses	Usage
25	USB
26	–
27	–
28	–
29	–
30	–
31	Headlamp level
32	–
33	Body ignition/IP ignition
34	Exhaust valve
35	Transmission control module ignition/ Engine control module ignition/Shift ignition/Brake ignition
36	Shift module
37	Body control module 1/Electronic park brake switch
38	Center stack module

Fuses	Usage
39	Steering wheel controls
40	Body control module 2
41	Body control module 3
42	Body control module 4

Circuit Breakers	Usage
CB1	Auxiliary power outlet 1
CB2	Auxiliary power outlet 2

Relays	Usage
1	Run after park/ Accessory
2	Run crank
3	–
4	–
5	–

Rear Compartment Fuse Block

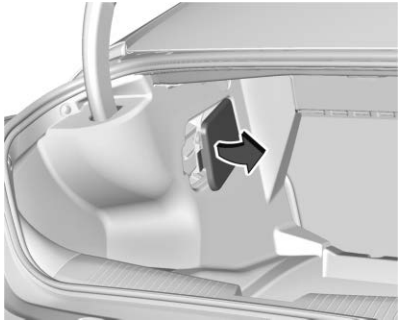

The rear compartment fuse block is behind a cover on the driver side of the rear compartment.

The vehicle may not be equipped with all of the fuses, relays, and features shown.

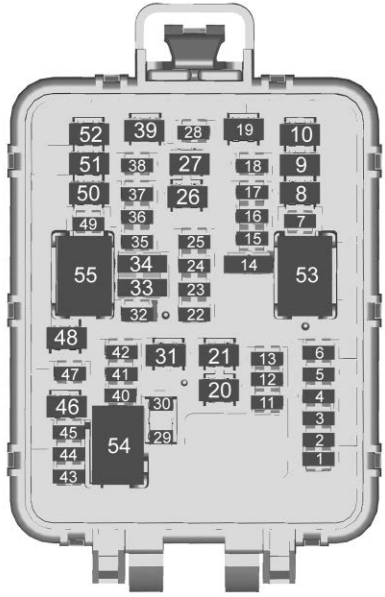

Fuses	Usage
1	Remote function actuator
2	–
3	Driver heated seat
4	Fuel tank zone module
5	–
6	–
7	–
8	–
9	–
10	Motor seat belt passenger
11	Canister vent solenoid
12	Sunroof
13	–
14	–
15	Passenger heated seat
16	–

Fuses	Usage
17	Electronic suspension control
18	–
19	Motor seat belt driver
20	Rear defog
21	DC to DC transformer 2
22	Driver power window / Door handle switch
23	External object calculating module/ Front camera module/High definition localization/Short range radar
24	Passenger power window / Door handle switch
25	–
26	–
27	Rear drive control module
28	–
29	–
30	–
31	DC to DC transformer 1
32	Transfer case electronic control
33	Central gateway module/Side blind zone alert
34	Video processing module
35	Hands free closure release
36	Exterior lighting module 2
37	Passenger memory seat module
38	–
39	Right front/Right rear window
40	–
41	–
42	Amplifier
43	Park assist module
44	Driver memory seat module
45	OnStar
46	–
47	–
48	–
49	–
50	Driver seat
51	Left front/Left rear window
52	Passenger seat

Relays	Usage
53	–
54	–
55	Run

Wheels and Tires

Tires

Every new GM vehicle has high-quality tires made by a leading tire manufacturer. See the warranty manual for information regarding the tire warranty and where to get service. For additional information refer to the tire manufacturer.

⚠ Warning

- Poorly maintained and improperly used tires are dangerous.
- Overloading the tires can cause overheating as a result of too much flexing. There could be a blowout and a serious crash. See *Vehicle Load Limits* ⇨ *214*.
- Underinflated tires pose the same danger as overloaded tires. The resulting crash

(Continued)

Warning (Continued)

could cause serious injury. Check all tires frequently to maintain the recommended pressure. Tire pressure should be checked when the tires are cold.

- Overinflated tires are more likely to be cut, punctured, or broken by a sudden impact — such as when hitting a pothole. Keep tires at the recommended pressure.
- Worn or old tires can cause a crash. If the tread is badly worn, replace them.
- Replace any tires that have been damaged by impacts with potholes, curbs, etc.
- Improperly repaired tires can cause a crash. Only the dealer or an authorized tire service

(Continued)

Warning (Continued)

center should repair, replace, dismount, and mount the tires.

- Do not spin the tires in excess of 56 km/h (35 mph) on slippery surfaces such as snow, mud, ice, etc. Excessive spinning may cause the tires to explode.

See *Tire Pressure for High-Speed Operation* ⇨ *347* for inflation pressure adjustment for high-speed driving.

All-Season Tires

This vehicle may come with all-season tires. These tires are designed to provide good overall performance on most road surfaces and weather conditions. Original equipment tires designed to GM's specific tire performance criteria have a TPC specification code molded onto the sidewall. Original equipment

all-season tires can be identified by the last two characters of this TPC code, which will be “MS.”

Consider installing winter tires on the vehicle if frequent driving on snow or ice-covered roads is expected. All-season tires provide adequate performance for most winter driving conditions, but they may not offer the same level of traction or performance as winter tires on snow or ice-covered roads. See *Winter Tires* ⇨ *340*.

Winter Tires

This vehicle was not originally equipped with winter tires. Winter tires are designed for increased traction on snow and ice-covered roads. Consider installing winter tires on the vehicle if frequent driving on ice or snow covered roads is expected. See your dealer for details regarding winter tire availability and proper tire selection. Also, see *Buying New Tires* ⇨ *354*.

With winter tires, there may be decreased dry road traction, increased road noise, and shorter tread life.

After changing to winter tires, be alert for changes in vehicle handling and braking.

If using winter tires:

- Use tires of the same brand and tread type on all four wheel positions.
- Use only radial ply tires of the same size, load range, and speed rating as the original equipment tires.

Winter tires with the same speed rating as the original equipment tires may not be available for H, V, W, Y, and ZR speed rated tires. If winter tires with a lower speed rating are chosen, never exceed the tire's maximum speed capability.

Run-Flat Tires

This vehicle, when new, may have had run-flat tires. There is no spare tire, no tire changing equipment, and no place to store a tire in the vehicle.

⚠ Warning

While driving with run-flat tires at a reduced inflation pressure, avoid making sudden stops or severe maneuvers as the handling capabilities of the tires will be reduced. Driving too fast could cause loss of control and you or others could be injured. Do not drive over 80 km/h (50 mph) with the tire operating at low pressure. Drive cautiously and check the tire pressure as soon as possible.

Run-flat tires can be driven up to 80 km (50 mi) at speeds less than 80 km/h (50 mph) after a loss of inflation pressure has occurred. There is no need to stop on the side of the road to change the tire. The possible driving range after a pressure loss will vary based on the vehicle load and driving conditions. As soon as possible, contact the nearest authorized GM or run-flat servicing facility for inspection and repair or replacement.

When driving on a deflated run-flat tire, avoid potholes and other road hazards that could damage the tire and/or wheel beyond repair. When a tire has been damaged, or if driven any distance while deflated, check with an authorized run-flat tire service center to determine whether the tire can be repaired or should be replaced. To maintain the run-flat feature, all replacement tires must be run-flat tires.

To locate the nearest GM or run-flat servicing facility, call Customer Assistance.

Self-Sealing Tires

This vehicle may have self-sealing tires. These tires have a material inside that can seal punctures from common road hazards, such as nails and screws, in the tread area. The tire may lose air pressure if the sidewall is damaged or the tread puncture is too large. If the Tire Pressure Monitor System indicates the tire pressure is low, inspect the tire for damage and inflate it to the recommended pressure. If the tire is unable to maintain the recommended pressure, contact the nearest authorized GM servicing facility immediately for inspection and repair or replacement. To locate the nearest GM servicing facility, call GM Customer Assistance.

Caution

Do not drive on a deflated self-sealing tire as this could damage the tire. Make sure the tire is inflated to the recommended pressure or have it immediately repaired or replaced.

When tire replacement is needed replace with a self-sealing tire, because the vehicle does not come with a spare tire or tire changing equipment.

Low-Profile Tires

If the vehicle has 225/45R17 91V, 235/40R18 91V, 235/40R18 XL 95Y, or 235/35R19 XL 91V size tires, they are classified as low-profile tires.

Caution

Low-profile tires are more susceptible to damage from road hazards or curb impact than standard profile tires. Tire and/or wheel assembly damage can occur when coming into contact with road hazards like potholes, or sharp edged objects, or when sliding into a curb. The warranty does not cover this type of damage. Keep tires set to the correct inflation pressure and when possible, avoid contact with curbs, potholes, and other road hazards.

Summer Tires

High Performance Summer Tires

This vehicle may come with 235/40R18 XL 95Y high performance summer tires. These tires have a special tread and compound that are optimized for maximum dry and wet road performance. This special tread and compound will have decreased performance in cold climates, and on ice and snow. It is recommended that winter tires be installed on the vehicle

if frequent driving at temperatures below approximately 5 °C (40 °F) or on ice or snow covered roads is expected. See *Winter Tires* ⇨ *340*.

Caution

High performance summer tires have rubber compounds that lose flexibility and may develop surface cracks in the tread area at temperatures below –7 °C (20 °F). Always store high performance summer tires indoors and at temperatures above –7 °C (20 °F) when not in use. If the tires have been subjected to –7 °C (20 °F) or less, let them warm up in a heated space to at least 5 °C (40 °F) for 24 hours or more before being installed or driving a vehicle on which they are installed. Do not apply heat or blow heated air directly on the tires. Always inspect tires before use. See *Tire Inspection* ⇨ *352*.

Tire Sidewall Labeling

Useful information about a tire is molded into its sidewall. The example shows a typical passenger tire sidewall.

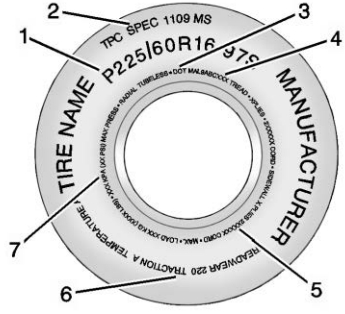

Passenger (P-Metric) Tire Example

(1) Tire Size : The tire size is a combination of letters and numbers used to define a particular tire's width, height, aspect ratio, construction type, and service description. See the “Tire Size” illustration later in this section.

(2) TPC Spec (Tire Performance Criteria Specification) : Original equipment tires designed to GM's specific tire performance criteria have a TPC specification code molded onto the sidewall. GM's TPC specifications meet or exceed all federal safety guidelines.

(3) DOT (Department of Transportation) : The Department of Transportation (DOT) code indicates that the tire is in compliance with the U.S. Department of Transportation Motor Vehicle Safety Standards.

DOT Tire Date of Manufacture : The last four digits of the TIN indicate the tire manufactured date. The first two digits represent the week and the last two digits, the year. For example, the third week of the year 2020 would have a 4-digit DOT date of 0320. Week 01 is the first full week (Sunday through Saturday) of each year.

(4) Tire Identification Number (TIN) : The letters and numbers following the DOT code are the Tire Identification Number (TIN). The TIN shows the manufacturer and plant code, tire size, and date the tire was manufactured. The TIN is molded onto both sides of the tire, although only one side may have the date of manufacture.

(5) Tire Ply Material : The type of cord and number of plies in the sidewall and under the tread.

(6) Uniform Tire Quality Grading (UTQG) : Tire manufacturers are required to grade tires based on three performance factors: treadwear, traction, and temperature resistance. For more information see *Uniform Tire Quality Grading* ⇨ *356*.

(7) Maximum Cold Inflation Load Limit : Maximum load that can be carried and the maximum pressure needed to support that load.

Tire Designations

Tire Size

The example shows a typical passenger vehicle tire size.

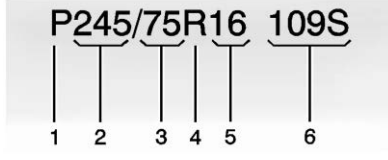

Passenger (P-Metric) Tire

(1) Passenger (P-Metric) Tire : The United States version of a metric tire sizing system. The letter "P" as the first character in the tire size means a passenger vehicle tire engineered to standards set by the U.S. Tire and Rim Association.

(2) Tire Width : The 3-digit number indicates the tire section width in millimeters from sidewall to sidewall.

(3) Aspect Ratio : A 2-digit number that indicates the tire height-to-width measurements. For example, if the tire size aspect ratio is 75, as shown in item (3) of the illustration, it would mean that the tire's sidewall is 75 percent as high as it is wide.

(4) Construction Code : A letter code is used to indicate the type of ply construction in the tire. The letter "R" means radial ply construction; the letter "D" means diagonal or bias ply construction.

(5) Rim Diameter : Diameter of the wheel in inches.

(6) Service Description : These characters represent the load index and speed rating of the tire. The load index represents the load carrying capacity a tire is certified

to carry. The speed rating is the maximum speed a tire is certified to carry a load.

Tire Terminology and Definitions

Air Pressure : The amount of air inside the tire pressing outward on each square inch of the tire. Air pressure is expressed in kPa (kilopascal) or psi (pounds per square inch).

Accessory Weight : The combined weight of optional accessories. Some examples of optional accessories are automatic transmission, power windows, power seats, and air conditioning.

Aspect Ratio : The relationship of a tire's height to its width.

Belt : A rubber coated layer of cords between the plies and the tread. Cords may be made from steel or other reinforcing materials.

Bead : The tire bead contains steel wires wrapped by steel cords that hold the tire onto the rim.

Bias Ply Tire : A pneumatic tire in which the plies are laid at alternate angles less than 90 degrees to the centerline of the tread.

Cold Tire Pressure : The amount of air pressure in a tire, measured in kPa (kilopascal) or psi (pounds per square inch) before a tire has built up heat from driving. See *Tire Pressure* ⇨ *346*.

Curb Weight : The weight of a motor vehicle with standard and optional equipment including the maximum capacity of fuel, oil, and coolant, but without passengers and cargo.

DOT Markings : A code molded into the sidewall of a tire signifying that the tire is in compliance with the U.S. Department of Transportation (DOT) Motor Vehicle Safety Standards. The DOT code includes the Tire Identification Number (TIN), an alphanumeric designator which can also identify the tire manufacturer, production plant, brand, and date of production.

GVWR : Gross Vehicle Weight Rating. See *Vehicle Load Limits* ⇨ *214*.

GAWR FRT : Gross Axle Weight Rating for the front axle. See *Vehicle Load Limits* ⇨ *214*.

GAWR RR : Gross Axle Weight Rating for the rear axle. See *Vehicle Load Limits* ⇨ *214*.

Intended Outboard Sidewall : The side of an asymmetrical tire that must always face outward when mounted on a vehicle.

Kilopascal (kPa) : The metric unit for air pressure.

Light Truck (LT-Metric) Tire : A tire used on light duty trucks and some multipurpose passenger vehicles.

Load Index : An assigned number ranging from 1 to 279 that corresponds to the load carrying capacity of a tire.

Maximum Inflation Pressure : The maximum air pressure to which a cold tire can be inflated. The maximum air pressure is molded onto the sidewall.

Maximum Load Rating : The load rating for a tire at the maximum permissible inflation pressure for that tire.

Maximum Loaded Vehicle Weight : The sum of curb weight, accessory weight, vehicle capacity weight, and production options weight.

Normal Occupant Weight : The number of occupants a vehicle is designed to seat multiplied by 68 kg (150 lb). See *Vehicle Load Limits* ⇨ *214*.

Occupant Distribution : Designated seating positions.

Outward Facing Sidewall : The side of an asymmetrical tire that has a particular side that faces outward when mounted on a vehicle. The side of the tire that contains a whitewall, bears white lettering, or bears manufacturer, brand, and/or model name molding that is higher or deeper than the same moldings on the other sidewall of the tire.

Passenger (P-Metric) Tire : A tire used on passenger cars and some light duty trucks and multipurpose vehicles.

Recommended Inflation Pressure : Vehicle manufacturer's recommended tire inflation pressure as shown on the tire placard. See *Tire Pressure* ⇨ *346* and *Vehicle Load Limits* ⇨ *214*.

Radial Ply Tire : A pneumatic tire in which the ply cords that extend to the beads are laid at 90 degrees to the centerline of the tread.

Rim : A metal support for a tire and upon which the tire beads are seated.

Sidewall : The portion of a tire between the tread and the bead.

Speed Rating : An alphanumeric code assigned to a tire indicating the maximum speed at which a tire can operate.

Traction : The friction between the tire and the road surface. The amount of grip provided.

Tread : The portion of a tire that comes into contact with the road.

Treadwear Indicators : Narrow bands, sometimes called wear bars, that show across the tread of a tire when only 1.6 mm (1/16 in) of tread remains. See *When It Is Time for New Tires* ⇨ *353*.

UTQGS (Uniform Tire Quality Grading Standards) : A tire information system that provides consumers with ratings for a tire's traction, temperature, and

treadwear. Ratings are determined by tire manufacturers using government testing procedures. The ratings are molded into the sidewall of the tire. See *Uniform Tire Quality Grading* ⇨ *356*.

Vehicle Capacity Weight : The number of designated seating positions multiplied by 68 kg (150 lb) plus the rated cargo load. See *Vehicle Load Limits* ⇨ *214*.

Vehicle Maximum Load on the Tire : Load on an individual tire due to curb weight, accessory weight, occupant weight, and cargo weight.

Vehicle Placard : A label permanently attached to a vehicle showing the vehicle capacity weight and the original equipment tire size and recommended inflation pressure. See “Tire and Loading Information Label” under *Vehicle Load Limits* ⇨ *214*.

Tire Pressure

Tires need the correct amount of air pressure to operate effectively.

⚠ Warning

Neither tire underinflation nor overinflation is good. Underinflated tires, or tires that do not have enough air, can result in:

- Tire overloading and overheating, which could lead to a blowout.
- Premature or irregular wear.
- Poor handling.
- Reduced fuel economy.

Overinflated tires, or tires that have too much air, can result in:

- Unusual wear.
- Poor handling.
- Rough ride.
- Needless damage from road hazards.

The Tire and Loading Information label on the vehicle indicates the original equipment tires and the correct cold tire inflation pressures. The recommended pressure is the minimum air pressure needed to support the vehicle's maximum load carrying capacity. See *Vehicle Load Limits* ⇨ *214*.

How the vehicle is loaded affects vehicle handling and ride comfort. Never load the vehicle with more weight than it was designed to carry.

When to Check

Check the pressure of the tires once a month or more.

How to Check

Use a good quality pocket-type gauge to check tire pressure. Proper tire inflation cannot be determined by looking at the tire. Check the tire inflation pressure when the tires are cold, meaning

the vehicle has not been driven for at least three hours or no more than 1.6 km (1 mi).

Remove the valve cap from the tire valve stem. Press the tire gauge firmly onto the valve to get a pressure measurement. If the cold tire inflation pressure matches the recommended pressure on the Tire and Loading Information label, no further adjustment is necessary. If the inflation pressure is low, add air until the recommended pressure is reached. If the inflation pressure is high, press on the metal stem in the center of the tire valve to release air.

Recheck the tire pressure with the tire gauge.

Put the valve caps back on the valve stems to keep out dirt and moisture. Use only valve caps designed for the vehicle by GM.

TPMS sensors could be damaged and would not be covered by the vehicle warranty.

Tire Pressure for High-Speed Operation

⚠ Warning

Driving at high speeds, 160 km/h (100 mph) or higher, puts additional strain on tires. Sustained high-speed driving causes excessive heat buildup and can cause sudden tire failure. This could cause a crash, and you or others could be killed. Some high-speed rated tires require inflation pressure adjustment for high-speed operation. When speed limits and road conditions allow the vehicle to be driven at high speeds, make sure the tires are rated for high-speed operation, are in excellent condition, and are set to the correct cold tire inflation pressure for the vehicle load.

Vehicles with tire sizes listed in the High Speed Operation Inflation Pressures table require inflation pressure adjustment when driving the vehicle at speeds of 160 km/h (100 mph) or higher. Set the cold tire inflation pressure to the corresponding value in the table for the tire size on the vehicle.

High Speed Operation Inflation Pressures	
Tire Size	**Cold Inflation Pressure kPa (psi)**
225/45R17 (91V)	240 kPa (35 psi) Front
225/45R17 (91V)	280 kPa (41 psi) Rear
235/40R18 (91V)	250 kPa (36 psi) Front
235/40R18 (91V)	280 kPa (41 psi) Rear
235/40R18 (95Y)	300 kPa (44 psi) Front
235/40R18 (95Y)	340 kPa (49 psi) Rear
235/35R19 (91V)	270 kPa (39 psi) Front
235/35R19 (91V)	320 kPa (46 psi) Rear

Return the tires to the recommended cold tire inflation pressure when high-speed driving has ended. See *Vehicle Load Limits* ⇨ *214* and *Tire Pressure* ⇨ *346*.

Tire Pressure Monitor System

The Tire Pressure Monitor System (TPMS) uses radio and sensor technology to check tire pressure levels. The TPMS sensors monitor the air pressure in your tires and transmit tire pressure readings to a receiver located in the vehicle.

Each tire, including the spare (if provided), should be checked monthly when cold and inflated to the inflation pressure recommended by the vehicle manufacturer on the vehicle placard or tire inflation pressure label. (If your vehicle has tires of a different size than the size indicated on the vehicle placard or tire inflation pressure label, you should determine the proper tire inflation pressure for those tires.)

As an added safety feature, your vehicle has been equipped with a tire pressure monitoring system (TPMS) that illuminates a low tire pressure telltale when one or more of your tires is significantly under-inflated.

Accordingly, when the low tire pressure telltale illuminates, you should stop and check your tires as

soon as possible, and inflate them to the proper pressure. Driving on a significantly under-inflated tire causes the tire to overheat and can lead to tire failure. Under-inflation also reduces fuel efficiency and tire tread life, and may affect the vehicle's handling and stopping ability.

Please note that the TPMS is not a substitute for proper tire maintenance, and it is the driver's responsibility to maintain correct tire pressure, even if under-inflation has not reached the level to trigger illumination of the TPMS low tire pressure telltale.

Your vehicle has also been equipped with a TPMS malfunction indicator to indicate when the system is not operating properly. The TPMS malfunction indicator is combined with the low tire pressure telltale. When the system detects a malfunction, the telltale will flash for approximately one minute and then remain continuously illuminated. This sequence will continue upon subsequent vehicle start-ups as long as the malfunction exists.

When the malfunction indicator is illuminated, the system may not be able to detect or signal low tire pressure as intended. TPMS malfunctions may occur for a variety of reasons, including the installation of replacement or alternate tires or wheels on the vehicle that prevent the TPMS from functioning properly. Always check the TPMS malfunction telltale after replacing one or more tires or wheels on your vehicle to ensure that the replacement or alternate tires and wheels allow the TPMS to continue to function properly.

See *Tire Pressure Monitor Operation* ⇨ *349*.

See *Radio Frequency Statement* ⇨ *409*.

Tire Pressure Monitor Operation

This vehicle may have a Tire Pressure Monitor System (TPMS). The TPMS is designed to warn the driver when a low tire pressure condition exists.

TPMS sensors are mounted onto each tire and wheel assembly, excluding the spare tire and wheel assembly. The TPMS sensors monitor the air pressure in the tires and transmit the tire pressure readings to a receiver located in the vehicle.

When a low tire pressure condition is detected, the TPMS illuminates the low tire pressure warning light located on the instrument cluster. If the warning light comes on, stop as soon as possible and inflate the tires to the recommended pressure shown on the Tire and Loading Information label. See *Vehicle Load Limits* ⇨ *214*.

A message to check the pressure in a specific tire displays in the Driver Information Center (DIC). The low tire pressure warning light and the DIC warning message come on at each ignition cycle until the tires are inflated to the correct inflation

pressure. Using the DIC, tire pressure levels can be viewed. For additional information and details about the DIC operation and displays see *Driver Information Center (DIC) (Base Level)* ⇨ *107* or *Driver Information Center (DIC) (Uplevel)* ⇨ *110*.

The low tire pressure warning light may come on in cool weather when the vehicle is first started, and then turn off as the vehicle is driven. This could be an early indicator that the air pressure is getting low and needs to be inflated to the proper pressure.

A Tire and Loading Information label, attached to your vehicle, shows the size of the original equipment tires and the correct inflation pressure for the tires when they are cold. See *Vehicle Load Limits* ⇨ *214*, for an example of the Tire and Loading Information label and its location. Also see *Tire Pressure* ⇨ *346*.

The TPMS can warn about a low tire pressure condition but it does not replace normal tire maintenance. See *Tire Inspection* ⇨ *352*, *Tire Rotation* ⇨ *352* and *Tires* ⇨ *339*.

Caution

Tire sealant materials are not all the same. A non-approved tire sealant could damage the TPMS sensors. TPMS sensor damage caused by using an incorrect tire sealant is not covered by the vehicle warranty. Always use only the GM approved tire sealant available through your dealer or included in the vehicle.

Factory-installed Tire Inflator Kits use a GM-approved liquid tire sealant. Using non-approved tire sealants could damage the TPMS sensors. See *Tire Sealant and Compressor Kit* ⇨ *360* for information regarding the inflator kit materials and instructions.

TPMS Malfunction Light and Message

The TPMS will not function properly if one or more of the TPMS sensors are missing or inoperable. When the system detects a malfunction, the low tire pressure warning light flashes for about one minute and then stays on for the remainder of the ignition cycle. A DIC warning message also displays. The malfunction light and DIC warning message come on at each ignition cycle until the problem is corrected. Some of the conditions that can cause these to come on are:

- One of the road tires has been replaced with the spare tire. The spare tire does not have a TPMS sensor. The malfunction light and DIC message should go off after the road tire is replaced and the sensor matching process is performed successfully. See “TPMS Sensor Matching Process” later in this section.
- The TPMS sensor matching process was not done or not completed successfully after rotating the tires. The malfunction light and the DIC

message should go off after successfully completing the sensor matching process. See "TPMS Sensor Matching Process" later in this section.

- One or more TPMS sensors are missing or damaged. The malfunction light and the DIC message should go off when the TPMS sensors are installed and the sensor matching process is performed successfully. See your dealer for service.
- Replacement tires or wheels do not match the original equipment tires or wheels. Tires and wheels other than those recommended could prevent the TPMS from functioning properly. See *Buying New Tires* ⇨ *354*.
- Operating electronic devices or being near facilities using radio wave frequencies similar to the TPMS could cause the TPMS sensors to malfunction.

If the TPMS is not functioning properly it cannot detect or signal a low tire pressure condition. See your dealer for service if the TPMS malfunction light and DIC message come on and stay on.

Tire Fill Alert (If Equipped)

This feature provides visual and audible alerts outside the vehicle to help when inflating an underinflated tire to the recommended cold tire pressure.

When the low tire pressure warning light comes on:

1. Park the vehicle in a safe, level place.
2. Set the parking brake firmly.
3. Place the vehicle in P (Park).
4. Add air to the tire that is underinflated. The turn signal lamp will flash.

   When the recommended pressure is reached, the horn sounds once and the turn signal lamp will stop flashing and briefly turn solid.

Repeat these steps for all underinflated tires that have illuminated the low tire pressure warning light.

⚠ Warning

Overinflating a tire could cause the tire to rupture and you or others could be injured. Do not exceed the maximum pressure listed on the tire sidewall. See *Tire Sidewall Labeling* ⇨ *342* and *Vehicle Load Limits* ⇨ *214*.

If the tire is overinflated by more than 35 kPa (5 psi), the horn will sound multiple times and the turn signal lamp will continue to flash for several seconds after filling stops. To release and correct the pressure, while the turn signal lamp is still flashing, briefly press the center of the valve stem. When the recommended pressure is reached, the horn sounds once.

If the turn signal lamp does not flash within 15 seconds after starting to inflate the tire, the tire fill alert has not been activated or is not working.

If the hazard warning flashers are on, the tire fill alert visual feedback will not work properly.

The TPMS will not activate the tire fill alert properly under the following conditions:

- There is interference from an external device or transmitter.
- The air pressure from the inflation device is not sufficient to inflate the tire.
- There is a malfunction in the TPMS.
- There is a malfunction in the horn or turn signal lamps.
- The identification code of the TPMS sensor is not registered to the system.
- The battery of the TPMS sensor is low.

If the tire fill alert does not operate due to TPMS interference, move the vehicle about 1 m (3 ft) back or forward and try again. If the tire fill alert feature is not working, use a tire pressure gauge.

TPMS Sensor Matching Process — Auto Learn Function

Each TPMS sensor has a unique identification code. The identification code needs to be matched to a new tire/wheel position after rotating the tires or replacing one or more of the TPMS sensors. When a tire is installed, the vehicle must be stationary for about 20 minutes before the system recalculates. The following relearn process takes up to 10 minutes, driving at a minimum speed of 20 km/h (12 mph). A dash (-) or pressure value will display in the DIC. See *Driver Information Center (DIC) (Base Level)* ⇨ *107* or *Driver Information Center (DIC) (Uplevel)* ⇨ *110*. A warning message displays in the DIC if a problem occurs during the relearn process.

Tire Inspection

We recommend that the tires, including the spare tire, if the vehicle has one, be inspected for signs of wear or damage at least once a month.

Replace the tire if:

- The indicators at three or more places around the tire can be seen.
- There is cord or fabric showing through the tire's rubber.
- The tread or sidewall is cracked, cut, or snagged deep enough to show cord or fabric.
- The tire has a bump, bulge, or split.
- The tire has a puncture, cut, or other damage that cannot be repaired well because of the size or location of the damage.

Tire Rotation

Tires should be rotated every 12 000 km (7,500 mi). See *Maintenance Schedule* ⇨ *380*.

Tires are rotated to achieve a more uniform wear for all tires. The first rotation is the most important.

Anytime unusual wear is noticed, rotate the tires as soon as possible, check for proper tire inflation pressure, and check for damaged tires or wheels. If the unusual wear continues after the

rotation, check the wheel alignment. See *When It Is Time for New Tires* ⇨ *353* and *Wheel Replacement* ⇨ *357*.

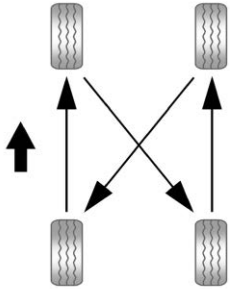

Use this rotation pattern when rotating the tires.

Adjust the front and rear tires to the recommended inflation pressure on the Tire and Loading Information label after the tires have been rotated. See *Tire Pressure* ⇨ *346* and *Vehicle Load Limits* ⇨ *214*.

Reset the Tire Pressure Monitor System. See *Tire Pressure Monitor Operation* ⇨ *349*.

Check that all wheel nuts are properly tightened. See "Wheel Nut Torque" under *Capacities and Specifications* ⇨ *396*.

⚠ Warning

Rust or dirt on a wheel, or on the parts to which it is fastened, can cause wheel nuts to become loose over time. The wheel could come off and cause a crash. When changing a wheel, remove any rust or dirt from places where the wheel attaches to the vehicle. In an emergency, a cloth or paper towel can be used; however, use a scraper or wire brush later to remove all rust or dirt.

Lightly coat the inner diameter of the wheel hub opening with wheel bearing grease after a wheel change or tire rotation to prevent corrosion or rust build-up.

⚠ Warning

Do not apply grease to the wheel mounting surface, wheel conical seats, or the wheel nuts or bolts. Grease applied to these areas could cause a wheel to become loose or come off, resulting in a crash.

When It Is Time for New Tires

Factors, such as maintenance, temperatures, driving speeds, vehicle loading, and road conditions affect the wear rate of the tires.

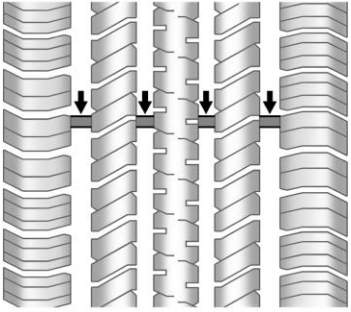

Treadwear indicators are one way to tell when it is time for new tires. Treadwear indicators appear when the tires have only 1.6 mm (1/16 in) or less of tread remaining. See *Tire Inspection* ⇨ *352* and *Tire Rotation* ⇨ *352* for additional information.

The rubber in tires ages over time. This also applies to the spare tire, if the vehicle has one, even if it is never used. Multiple factors including temperatures, loading conditions, and inflation pressure maintenance affect how fast aging takes place. GM recommends that tires, including the spare if equipped, be replaced after six years, regardless of tread wear. To identify the age of a tire, use the tire manufacture date, which is the last four digits of the DOT Tire Identification Number (TIN) molded into one side of the tire sidewall. The last four digits of the TIN indicate the tire manufactured date. The first two digits represent the week and the last two digits, the year. For example, the third week of the year 2020 would have a 4-digit DOT date of 0320. Week 01 is the first full week (Sunday through Saturday) of each year.

Vehicle Storage

Tires age when stored normally mounted on a parked vehicle. Park a vehicle that will be stored for at least a month in a cool, dry, clean area away from direct sunlight to slow aging. This area should be free of grease, gasoline, or other substances that can deteriorate rubber.

Parking for an extended period can cause flat spots on the tires that may result in vibrations while driving. When storing a vehicle for at least a month, remove the tires or raise the vehicle to reduce the weight from the tires.

Buying New Tires

GM has developed and matched specific tires for the vehicle. The original equipment tires installed were designed to meet General Motors Tire Performance Criteria Specification (TPC Spec) system rating. When replacement tires are needed, GM strongly recommends buying tires with the same TPC Spec rating.

GM's exclusive TPC Spec system considers over a dozen critical specifications that impact the overall performance of the vehicle, including brake system performance, ride and handling, traction control, and tire pressure monitoring performance. GM's TPC Spec number is molded onto the tire's sidewall near the tire size. If the tires have an all-season tread design, the TPC Spec

number will be followed by MS for mud and snow. See *Tire Sidewall Labeling* ⇨ *342* for additional information.

GM recommends replacing worn tires in complete sets of four. Uniform tread depth on all tires will help to maintain the performance of the vehicle. Braking and handling performance may be adversely affected if all the tires are not replaced at the same time. If proper rotation and maintenance have been done, all four tires should wear out at about the same time. However, if it is necessary to replace only one axle set of worn tires, place the new tires on the rear axle. See *Tire Rotation* ⇨ *352*.

⚠ Warning

Tires could explode during improper service. Attempting to mount or dismount a tire could cause injury or death. Only your

(Continued)

Warning (Continued)

dealer or authorized tire service center should mount or dismount the tires.

⚠ Warning

Mixing tires of different sizes (other than those originally installed on the vehicle), brands, tread patterns, or types may cause loss of vehicle control, resulting in a crash or other vehicle damage. Use the correct size, brand, and type of tire on all wheels.

⚠ Warning

Using bias-ply tires on the vehicle may cause the wheel rim flanges to develop cracks after many miles of driving. A tire and/or wheel could fail suddenly

(Continued)

Warning (Continued)

and cause a crash. Use only radial-ply tires with the wheels on the vehicle.

Winter tires with the same speed rating as the original equipment tires may not be available for H, V, W, Y and ZR speed rated tires. Never exceed the winter tires' maximum speed capability when using winter tires with a lower speed rating.

If the vehicle tires must be replaced with a tire that does not have a TPC Spec number, make sure they are the same size, load range, speed rating, and construction (radial) as the original tires.

The Tire and Loading Information label indicates the original equipment tires on the vehicle. See *Vehicle Load Limits* ⇨ *214*.

Different Size Tires and Wheels

If wheels or tires are installed that are a different size than the original equipment wheels and tires, vehicle performance, including its braking, ride and handling characteristics, stability, and resistance to rollover may be affected. If the vehicle has electronic systems such as antilock brakes, rollover airbags, traction control, electronic stability control, or All-Wheel Drive, the performance of these systems can also be affected.

⚠ Warning

If different sized wheels are used, there may not be an acceptable level of performance and safety if tires not recommended for those wheels are selected. This increases the chance of a crash and serious injury. Only use GM specific wheel and tire systems developed for the vehicle, and have them properly installed by a GM certified technician.

See *Buying New Tires* ⇨ *354* and *Accessories and Modifications* ⇨ *306*.

Uniform Tire Quality Grading

The following information relates to the system developed by the United States National Highway Traffic Safety Administration (NHTSA), which grades tires by treadwear, traction, and temperature performance. This applies only to vehicles sold in the United States. The grades are molded on the sidewalls of most passenger car tires. The Uniform Tire Quality Grading (UTQG) system does not apply to deep tread, winter tires, compact spare tires, tires with nominal rim diameters of 10 to 12 inches (25 to 30 cm), or to some limited-production tires.

While the tires available on General Motors passenger cars and light trucks may vary with respect to these grades, they must also conform to federal safety requirements and additional General Motors Tire Performance Criteria (TPC) standards.

Quality grades can be found where applicable on the tire sidewall between tread shoulder and maximum section width. For example:

Treadwear 200 Traction AA Temperature A

All Passenger Car Tires Must Conform to Federal Safety Requirements In Addition To These Grades.

Treadwear

The treadwear grade is a comparative rating based on the wear rate of the tire when tested under controlled conditions on a specified government test course. For example, a tire graded 150 would wear one and one-half (1½) times as well on the government course as a tire

graded 100. The relative performance of tires depends upon the actual conditions of their use, however, and may depart significantly from the norm due to variations in driving habits, service practices and differences in road characteristics and climate.

Traction

The traction grades, from highest to lowest, are AA, A, B, and C. Those grades represent the tire's ability to stop on wet pavement as measured under controlled conditions on specified government test surfaces of asphalt and concrete. A tire marked C may have poor traction performance. Warning: The traction grade assigned to this tire is based on straight-ahead braking traction tests, and does not include acceleration, cornering, hydroplaning, or peak traction characteristics.

Temperature

The temperature grades are A (the highest), B, and C, representing the tire's resistance to the generation of heat and its ability to dissipate heat when tested under controlled conditions on a specified indoor laboratory test wheel. Sustained high temperature can cause the material of the tire to degenerate and reduce tire life, and excessive temperature can lead to sudden tire failure. The grade C corresponds to a level of performance which all passenger car tires must meet under the Federal Motor Safety Standard No. 109. Grades B and A represent higher levels of performance on the laboratory test wheel than the minimum required by law. Warning: The temperature grade for this tire is established for a tire that is properly inflated and not overloaded. Excessive speed, underinflation, or excessive loading, either separately or in combination, can cause heat buildup and possible tire failure.

Wheel Alignment and Tire Balance

The tires and wheels were aligned and balanced at the factory to provide the longest tire life and best overall performance. Adjustments to wheel alignment and tire balancing are not necessary on a regular basis. Consider an alignment check if there is unusual tire wear or the vehicle is significantly pulling to one side or the other. Some slight pull to the left or right, depending on the crown of the road and/or other road surface variations such as troughs or ruts, is normal. If the vehicle is vibrating when driving on a smooth road, the tires and wheels may need to be rebalanced. See your dealer for proper diagnosis.

Wheel Replacement

Replace any wheel that is bent, cracked, or badly rusted or corroded. If wheel nuts keep coming loose, the wheel, wheel bolts, and wheel nuts

should be replaced. If the wheel leaks air, replace it. Some aluminum wheels can be repaired. See your dealer if any of these conditions exist.

Your dealer will know the kind of wheel that is needed.

Each new wheel should have the same load-carrying capacity, diameter, width, offset, and be mounted the same way as the one it replaces.

Replace wheels, wheel bolts, wheel nuts, or Tire Pressure Monitor System (TPMS) sensors with new GM original equipment parts.

⚠ Warning

Using the wrong replacement wheels, wheel bolts, or wheel nuts can be dangerous. It could affect the braking and handling of the vehicle. Tires can lose air, and cause loss of control, causing a crash. Always use the correct wheel, wheel bolts, and wheel nuts for replacement.

Caution

The wrong wheel can also cause problems with bearing life, brake cooling, speedometer or odometer calibration, headlamp aim, bumper height, vehicle ground clearance, and tire or tire chain clearance to the body and chassis.

Used Replacement Wheels

⚠ Warning

Replacing a wheel with a used one is dangerous. How it has been used or how far it has been driven may be unknown. It could fail suddenly and cause a crash. When replacing wheels, use a new GM original equipment wheel.

Tire Chains

⚠ Warning

If the vehicle has 235/40R18 or 235/35R19 size tires, do not use tire chains. There is not enough clearance. Tire chains used on a vehicle without the proper amount of clearance can cause damage to the brakes, suspension, or other vehicle parts. The area damaged by the tire chains could cause loss of control and a crash. Use another type of traction device only if its manufacturer recommends it for the vehicle's tire size combination and road conditions. Follow that manufacturer's instructions. To avoid vehicle damage, drive slow and readjust or remove the traction device if it contacts the vehicle. Do not spin the wheels. If traction devices are used, install them on the rear tires.

Caution

If the vehicle is equipped with a tire size other than 235/40R18 or 235/35R19, use tire chains only where legal and only when necessary. Use low profile chains that add no more than 12 mm thickness to the tire tread and inner sidewall. Use chains that are the proper size for the tires. Install them on the tires of the rear axle. Don't use chains on the tires of the front axle. Tighten them as tightly as possible with the ends securely fastened. Drive slowly and follow the chain manufacturer's instructions. If the chains contact the vehicle, stop and retighten them. If the contact continues, slow down until it stops. Driving too fast or spinning the wheels with chains on will damage the vehicle.

If a Tire Goes Flat

It is unusual for a tire to blow out while driving, especially if the tires are maintained properly. If air goes out of a tire, it is much more likely to leak out slowly. See *Tires* ⇨ *339* for additional information. But if there ever is a blowout, here are a few tips about what to expect and what to do:

If a front tire fails, the flat tire creates a drag that pulls the vehicle toward that side. Take your foot off the accelerator pedal and grip the steering wheel firmly. Steer to maintain lane position, and then gently brake to a stop, well off the road, if possible.

A rear blowout, particularly on a curve, acts much like a skid and may require the same correction as used in a skid. Stop pressing the accelerator pedal and steer to straighten the vehicle. It may be very bumpy and noisy. Gently brake to a stop, well off the road, if possible.

⚠ Warning

Driving on a flat tire will cause permanent damage to the tire. Re-inflating a tire after it has been driven on while severely underinflated or flat may cause a blowout and a serious crash. Never attempt to re-inflate a tire that has been driven on while severely underinflated or flat. Have your dealer or an authorized tire service center repair or replace the flat tire as soon as possible.

If the vehicle has run-flat tires, there is no need to stop on the side of the road to change a flat tire. See *Run-Flat Tires* ⇨ *340*.

⚠ Warning

Special tools and procedures are required to service a run-flat tire. If these special tools and procedures are not used, injury or vehicle damage may occur. Always

(Continued)

Warning (Continued)

be sure the proper tools and procedures, as described in the service manual, are used.

If a tire goes flat, avoid further tire and wheel damage by driving slowly to a level place, well off the road, if possible. Turn on the hazard warning flashers. See *Hazard Warning Flashers* ⇨ *129*.

The vehicle has no spare tire, no tire changing equipment, and no place to store a tire.

If the vehicle has self-sealing tires, see *Self-Sealing Tires* ⇨ *341*. Tread punctures typically will not cause tires to lose air. However, if the vehicle does get a flat tire, there is no spare tire, tire changing equipment, or place to store a tire. Contact Roadside Service for help.

This vehicle may come with a tire sealant and compressor kit. To use the tire sealant and compressor kit, see *Tire Sealant and Compressor Kit* ⇨ *360*.

Tire Sealant and Compressor Kit

⚠ Warning

Idling a vehicle in an enclosed area with poor ventilation is dangerous. Engine exhaust may enter the vehicle. Engine exhaust contains carbon monoxide (CO) which cannot be seen or smelled. It can cause unconsciousness and even death. Never run the engine in an enclosed area that has no fresh air ventilation. For more information, see *Engine Exhaust* ⇨ *226*.

⚠ Warning

Overinflating a tire could cause the tire to rupture and you or others could be injured. Be sure to read and follow the tire sealant and compressor kit instructions and inflate the tire to its recommended pressure. Do not exceed the recommended pressure.

⚠ Warning

Storing the tire sealant and compressor kit or other equipment in the passenger compartment of the vehicle could cause injury. In a sudden stop or collision, loose equipment could strike someone. Store the tire sealant and compressor kit in its original location.

If this vehicle has a tire sealant and compressor kit, there may not be a spare tire or tire changing equipment, and on some vehicles there may not be a place to store a tire.

The tire sealant and compressor can be used to temporarily seal punctures up to 6 mm (0.25 in) in the tread area of the tire. It can also be used to inflate an underinflated tire.

If the tire has been separated from the wheel, has damaged sidewalls, or has a large puncture, the tire is too severely damaged for the tire sealant and compressor kit to be effective. See *Roadside Service* ⇨ *403*.

Read and follow all of the tire sealant and compressor kit instructions.

The kit includes:

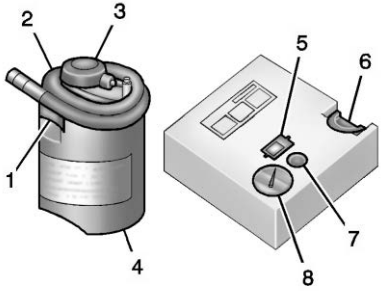

1. Sealant Canister Inlet Valve
2. Sealant/Air Hose
3. Base of Sealant Canister
4. Tire Sealant Canister
5. On/Off Button
6. Slot on Top of Compressor
7. Pressure Deflation Button
8. Pressure Gauge

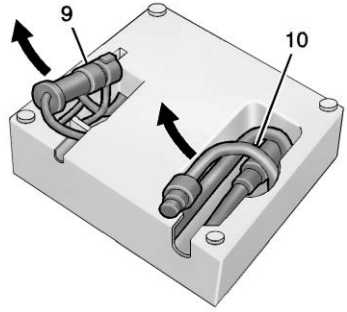

9. Power Plug
10. Air Only Hose

Tire Sealant

Read and follow the safe handling instructions on the label adhered to the tire sealant canister (4).

Check the tire sealant expiration date on the tire sealant canister. The tire sealant canister (4) should be replaced before its expiration date. Replacement tire sealant canisters are available at your local dealer.

There is only enough sealant to seal one tire. After usage, the tire sealant canister must be replaced.

Using the Tire Sealant and Compressor Kit to Temporarily Seal and Inflate a Punctured Tire

When using the tire sealant and compressor kit during cold temperatures, warm the kit in a heated environment for five minutes. This will help to inflate the tire faster.

If a tire goes flat, avoid further tire and wheel damage by driving slowly to a level place. Turn on the hazard warning flashers. See *Hazard Warning Flashers* ⇨ *129*.

See *If a Tire Goes Flat* ⇨ *359* for other important safety warnings.

Do not remove any objects that have penetrated the tire.

1. Remove the tire sealant canister (4) and compressor from its storage location. See *Storing the Tire Sealant and Compressor Kit* ⇨ *366*.
2. Remove the air only hose (10) and the power plug (9) from the bottom of the compressor.
3. Place the compressor on the ground near the flat tire.

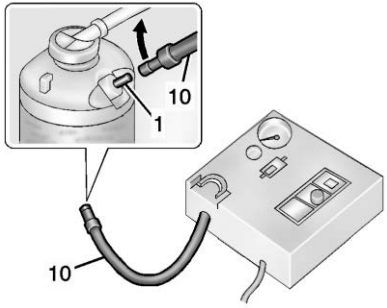

4. Attach the air only hose (10) to the sealant canister inlet valve (1) by turning it clockwise until tight.

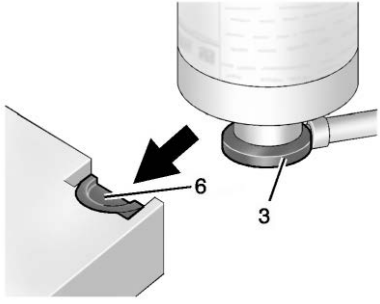

5. Slide the base of the tire sealant canister (3) into the slot on the top of the compressor (6) to hold it upright.

   Make sure the tire valve stem is positioned close to the ground so the hose will reach it.

6. Remove the valve stem cap from the flat tire by turning it counterclockwise.

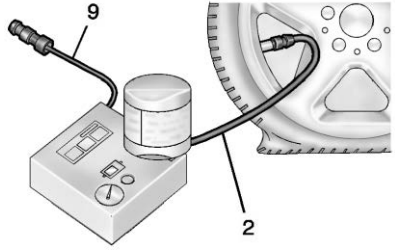

7. Attach the sealant/air hose (2) to the tire valve stem by turning it clockwise until tight.

8. Plug the power plug (9) into the accessory power outlet in the vehicle. Unplug all items from other accessory power outlets. See *Power Outlets* ⇨ *85*.

   Do not pinch the power plug cord in the door or window.

9. Start the vehicle. The vehicle must be running while using the air compressor.

10. Press the on/off button (5) to turn the tire sealant and compressor kit on.

    The compressor will inject sealant and air into the tire.

    The pressure gauge (8) will initially show a high pressure while the compressor pushes the sealant into the tire. Once the sealant is completely dispersed into the tire, the pressure will quickly drop and start to rise again as the tire inflates with air only.

11. Inflate the tire to the recommended inflation pressure using the pressure gauge (8). The recommended inflation pressure

can be found on the Tire and Loading Information label. See *Tire Pressure* ⇨ *346*.

The pressure gauge (8) may read higher than the actual tire pressure while the compressor is on. Turn the compressor off to get an accurate pressure reading. The compressor may be turned on/off until the correct pressure is reached.

Caution

If the recommended pressure cannot be reached after approximately 25 minutes, the vehicle should not be driven farther. The tire is too severely damaged and the tire sealant and compressor kit cannot inflate the tire. Remove the power plug from the accessory power outlet and unscrew the inflating hose from the tire valve.

12. Press the on/off button (5) to turn the tire sealant and compressor kit off.

    The tire is not sealed and will continue to leak air until the vehicle is driven and the sealant is distributed in the tire. Therefore, Steps 13–21 must be done immediately after Step 12.

    Be careful while handling the tire sealant and compressor kit as it could be warm after usage.

13. Unplug the power plug (9) from the accessory power outlet in the vehicle.
14. Turn the sealant/air hose (2) counterclockwise to remove it from the tire valve stem.
15. Replace the tire valve stem cap.
16. Remove the tire sealant canister (4) from the slot on top of the compressor (6).
17. Turn the air only hose (10) counterclockwise to remove it from the tire sealant canister inlet valve (1).
18. Turn the sealant/air hose (2) clockwise onto the sealant canister inlet valve (1) to prevent sealant leakage.
19. Return the air only hose (10) and power plug (9) back to their original storage location.

20. If the flat tire was able to inflate to the recommended inflation pressure, remove the maximum speed label from the sealant canister and place it in a highly visible location.

    Do not exceed the speed on this label until the damaged tire is repaired or replaced.

21. Return the equipment to its original storage location in the vehicle.
22. Immediately drive the vehicle 8 km (5 mi) to distribute the sealant in the tire.
23. Stop at a safe location and check the tire pressure. Refer to Steps 1–10 under “Using the Tire

Sealant and Compressor Kit without Sealant to Inflate a Tire (Not Punctured)."

If the tire pressure has fallen more than 68 kPa (10 psi) below the recommended inflation pressure, stop driving the vehicle. The tire is too severely damaged and the tire sealant cannot seal the tire.

If the tire pressure has not dropped more than 68 kPa (10 psi) from the recommended inflation pressure, inflate the tire to the recommended inflation pressure.

24. Wipe off any sealant from the wheel, tire, or vehicle.
25. Dispose of the used tire sealant canister (4) at a local dealer or in accordance with local state codes and practices.
26. Replace it with a new canister available from your dealer.
27. After temporarily sealing a tire using the tire sealant and compressor kit, take the vehicle to an authorized dealer within 161 km (100 mi) of driving to have the tire repaired or replaced.

Using the Tire Sealant and Compressor Kit without Sealant to Inflate a Tire (Not Punctured)

The kit includes:

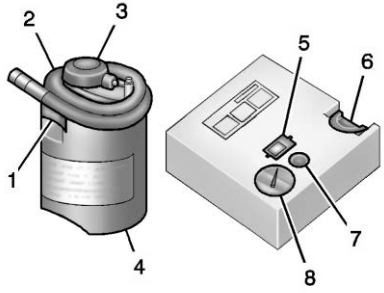

1. Sealant Canister Inlet Valve
2. Sealant/Air Hose
3. Base of Sealant Canister
4. Tire Sealant Canister
5. On/Off Button
6. Slot on Top of Compressor
7. Pressure Deflation Button
8. Pressure Gauge

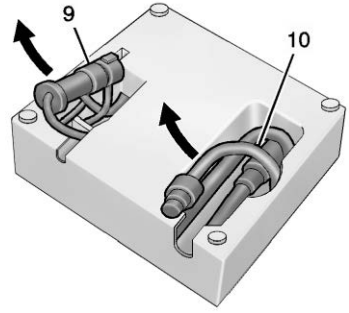

9. Power Plug
10. Air Only Hose

If a tire goes flat, avoid further tire and wheel damage by driving slowly to a level place. Turn on the hazard warning flashers. See *Hazard Warning Flashers* ⇨ *129*.

See *If a Tire Goes Flat* ⇨ *359* for other important safety warnings.

1. Remove the compressor from its storage location. See *Storing the Tire Sealant and Compressor Kit* ⇨ *366*.
2. Remove the air only hose (10) and the power plug (9) from the bottom of the compressor.

3. Place the compressor on the ground near the flat tire.

   Make sure the tire valve stem is positioned close to the ground so the hose will reach it.

4. Remove the valve stem cap from the flat tire by turning it counterclockwise.

5. Attach the air only hose (10) to the tire valve stem by turning it clockwise until tight.

6. Plug the power plug (9) into the accessory power outlet in the vehicle. Unplug all items from other accessory power outlets. See *Power Outlets* ⇨ *85*.

   Do not pinch the power plug cord in the door or window.

7. Start the vehicle. The vehicle must be running while using the air compressor.

8. Press the on/off button (5) to turn the tire sealant and compressor kit on.

   The compressor will inflate the tire with air only.

9. Inflate the tire to the recommended inflation pressure using the pressure gauge (8). The recommended inflation pressure can be found on the Tire and Loading Information label. See *Tire Pressure* ⇨ *346*.

   The pressure gauge (8) may read higher than the actual tire pressure while the compressor is on. Turn the compressor off to get an accurate pressure reading. The compressor may be turned on/off until the correct pressure is reached.

Caution

If the recommended pressure cannot be reached after approximately 25 minutes, the vehicle should not be driven farther. The tire is too severely damaged and the tire sealant and compressor kit cannot inflate the tire. Remove the power plug from the accessory power outlet and unscrew the inflating hose from the tire valve.

10. Press the on/off button (5) to turn the tire sealant and compressor kit off.

    Be careful while handling the compressor as it could be warm after usage.

11. Unplug the power plug (9) from the accessory power outlet in the vehicle.

12. Turn the air only hose (10) counterclockwise to remove it from the tire valve stem.

13. Replace the tire valve stem cap.

14. Return the air only hose (10) and power plug (9) back to their original storage location.

15. Return the equipment to its original storage location in the vehicle.

The tire sealant and compressor kit has accessory adapters located in a compartment on the bottom of its housing that can be used to inflate air mattresses, balls, etc.

Storing the Tire Sealant and Compressor Kit

The tire sealant and compressor kit is in a bag in the trunk.

1. Open the trunk. See *Trunk* ⇨ *19*.
2. Lift the load floor.

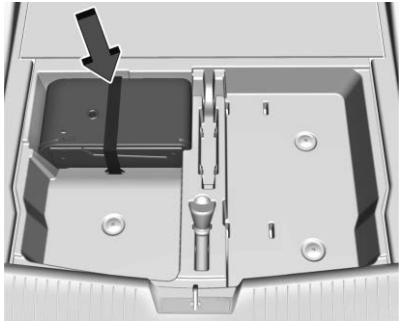

3. Remove the tire sealant and compressor kit bag.
4. Remove the tire sealant and compressor kit from the bag.

To store the tire sealant and compressor kit, reverse the steps.

Jump Starting

Jump Starting - North America

For more information about the vehicle battery, see *Battery - North America* ⇨ *326*.

If the battery has run down, try to use another vehicle and some jumper cables to start your vehicle. Be sure to use the following steps to do it safely.

⚠ Warning

WARNING: Battery posts, terminals, and related accessories contain lead and lead compounds, chemicals known to the State of California to cause cancer and birth defects or other reproductive harm. Batteries also contain other chemicals known to the State of California to cause cancer. **WASH HANDS AFTER HANDLING.** For more information go to www.P65Warnings.ca.gov/passenger-vehicle.

See *California Proposition 65 Warning* ⇨ *305* and the back cover.

⚠ Warning

Batteries can hurt you. They can be dangerous because:

- They contain acid that can burn you.
- They contain gas that can explode or ignite.
- They contain enough electricity to burn you.

If you do not follow these steps exactly, some or all of these things can hurt you.

Caution

Ignoring these steps could result in costly damage to the vehicle that would not be covered by the vehicle warranty. Trying to start the vehicle by pushing or pulling it will not work, and it could damage the vehicle.

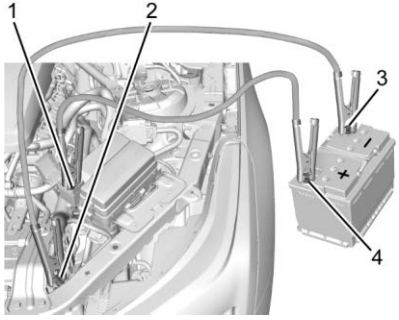

2.0L L4 Engine Shown, 2.7L L4 Engine Similar

1. Discharged Battery Remote Positive Terminal
2. Discharged Battery Negative Grounding Terminal
3. Good Battery Negative Terminal
4. Good Battery Positive Terminal

The jump start positive terminal (4) and negative post (3) are on the battery of the vehicle providing the jump start.

The jump start remote positive terminal (1) and the remote negative grounding terminal (2) for the discharged battery are on the passenger side of the vehicle.

The positive jump start connection for the discharged battery is under a cover. Lift the cover to expose the terminal.

1. Check the other vehicle. It must have a 12-volt battery with a negative ground system.

Caution

If the other vehicle does not have a 12-volt system with a negative ground, both vehicles can be damaged. Only use a vehicle that has a 12-volt system with a negative ground for jump starting.

2. Position the two vehicles so that they are not touching.
3. Set the parking brake firmly and put the shift lever in P (Park) with an automatic transmission, or Neutral with a manual transmission.

Caution

If any accessories are left on or plugged in during the jump starting procedure, they could be damaged. The repairs would not be covered by the vehicle warranty. Whenever possible, turn off or unplug all accessories on either vehicle when jump starting.

4. Turn the ignition off. Turn off all lights and accessories in both vehicles, except the hazard warning flashers if needed.

⚠ Warning

An electric fan can start up even when the engine is not running and can injure you. Keep hands, clothing, and tools away from any underhood electric fan.

⚠ Warning

Using a match near a battery can cause battery gas to explode. People have been hurt doing this, and some have been blinded. Use a flashlight if you need more light.

Battery fluid contains acid that can burn you. Do not get it on you. If you accidentally get it in your eyes or on your skin, flush the place with water and get medical help immediately.

⚠ Warning

Fans or other moving engine parts can injure you badly. Keep your hands away from moving parts once the engine is running.

5. Connect one end of the red positive (+) cable to the remote positive (+) terminal on the discharged battery.
6. Connect the other end of the red positive (+) cable to the positive (+) terminal of the good battery.
7. Connect one end of the black negative (–) cable to the negative (–) terminal of the good battery.

   Do not let the other end touch anything until the next step. The other end of the negative (–) cable does not go to the dead battery. It goes to a heavy, unpainted metal engine part.
8. Connect the other end of the black negative (–) cable to the negative (–) grounding point for the discharged battery.
9. Start the engine in the vehicle with the good battery and run the engine at idle speed for at least four minutes.
10. Try to start the vehicle that had the dead battery. If it will not start after a few tries, it probably needs service.

Caution

If the jumper cables are connected or removed in the wrong order, electrical shorting may occur and damage the vehicle. The repairs would not be covered by the vehicle warranty. Always connect and remove the jumper cables in the correct order, making sure that the cables do not touch each other or other metal.

Jumper Cable Removal

Reverse the sequence exactly when removing the jumper cables.

After starting the disabled vehicle and removing the jumper cables, allow it to idle for several minutes.

Towing the Vehicle

Caution

Incorrectly towing a disabled vehicle may cause damage. The damage would not be covered by the vehicle warranty. Do not lash or hook to suspension components. Use the proper straps around the tires to secure the vehicle. Do not drag a locked wheel/tire. Use tire skates or dollies under any locked wheel/tire while loading the vehicle. Do not use a sling type lift to tow the vehicle. This could damage the vehicle.

GM recommends a flatbed tow truck to transport a disabled vehicle. Use ramps to help reduce approach angles, if necessary. A towed vehicle should have its drive wheels off the ground. Contact a professional towing service if the disabled vehicle must be towed.

To tow the vehicle behind another vehicle for recreational purposes, such as behind a motor home, see *Recreational Vehicle Towing* ⇨ *370*.

Front Tow Eye

Caution

Improper use of the tow eye can damage the vehicle. If equipped, use the tow eye to load a disabled vehicle onto a flatbed tow truck from a flat road surface, or to move the vehicle a short distance. Use caution and low speeds. The transmission must be in (N) Neutral when moving the vehicle.

The vehicle is equipped with a tow eye. Only use the tow eye to pull the vehicle onto a flatbed car carrier from a flat road surface. Do not use the tow eye to pull the vehicle from snow, mud, or sand. The tow eye is located under the carpet in the trunk.

Carefully open the cover in the fascia by using the small notch that conceals the tow eye socket.

Install the tow eye into the socket and turn it until it is fully tightened. When the tow eye is removed, reinstall the cover with the notch in the original position.

Rear Tow Eye

If equipped, carefully open the cover by using the small notch that conceals the rear tow eye socket. Install the tow eye into the socket and turn it until it is fully tightened. When the tow eye is removed, reinstall the cover with the notch in the original position.

Recreational Vehicle Towing

Caution

Dolly towing or dinghy towing the vehicle may cause damage because of reduced ground clearance. Always put the vehicle on a flatbed truck or trailer.

The vehicle was neither designed nor intended to be towed with any of its wheels on the ground. If the vehicle must be towed, see *Towing the Vehicle* ⇨ *369*.

Appearance Care

Exterior Care

Locks

Locks are lubricated at the factory. Use a de-icing agent only when absolutely necessary, and have the locks greased after using. See *Recommended Fluids and Lubricants* ⇨ *391*.

Washing the Vehicle

To preserve the vehicle's finish, wash it often and out of direct sunlight.

Caution

Do not use petroleum-based, acidic, or abrasive cleaning agents as they can damage the vehicle's paint, metal, or plastic parts. If damage occurs, it would not be covered by the vehicle warranty. Approved cleaning products can be obtained from your dealer. Follow all manufacturer directions regarding correct product usage, necessary

(Continued)

Caution (Continued)

safety precautions, and appropriate disposal of any vehicle care product.

Caution

Avoid using high-pressure washes closer than 30 cm (12 in) to the surface of the vehicle. Use of power washers exceeding 8 274 kPa (1,200 psi) can result in damage or removal of paint and decals.

Caution

Some automatic car washes can cause damage to the vehicle, wheels and ground effects. Automatic car washes are not recommended, due to lack of clearance for the undercarriage and/or wide rear tires and wheels.

If using an automatic car wash, follow the car wash instructions. The windshield wiper and rear window wiper, if equipped, must be off.

Remove any accessories that may be damaged or interfere with the car wash equipment.

Rinse the vehicle well, before washing and after, to remove all cleaning agents completely. If they are allowed to dry on the surface, they could stain.

Dry the finish with a soft, clean chamois or an all-cotton towel to avoid surface scratches and water spotting.

Cleaning Underhood Components

Caution

Do not power wash any component under the hood that has this symbol.

This could cause damage that would not be covered by the vehicle warranty.

Solvents or aggressive cleaners may harm underhood components. The usages of these chemicals should be avoided.

Recommend water only.

A pressure washer may be used, but care must be utilized. The following criteria must be followed:

- Water pressure must be kept below 14 000 KPa (2,000 PSI).
- Water temperature must be below 80 °C (180 °F).
- Spray nozzle with a 40 degree wide angle spray pattern or wider must be used.
- Nozzle must be kept at least 30 cm (1 ft) away from all surfaces.

Finish Care

Application of aftermarket clearcoat sealant/wax materials is not recommended. If painted surfaces are damaged, see your dealer to have the damage assessed and repaired. Foreign materials such as calcium chloride and other salts, ice melting agents, road oil and tar, tree sap, bird droppings, chemicals from industrial chimneys, etc., can damage the vehicle's finish if they remain on painted surfaces. Wash the vehicle as soon as possible. If necessary, use non-abrasive cleaners that are marked safe for painted surfaces to remove foreign matter.

Occasional hand waxing or mild polishing should be done to remove residue from the paint finish. See your dealer for approved cleaning products.

Do not apply waxes or polishes to uncoated plastic, vinyl, rubber, decals, simulated wood, or flat paint as damage can occur.

Caution

Machine compounding or aggressive polishing on a basecoat/clearcoat paint finish may damage it. Use only non-abrasive waxes and polishes that are made for a basecoat/clearcoat paint finish on the vehicle.

To keep the paint finish looking new, keep the vehicle garaged or covered whenever possible.

Carbon Fiber Care

Carbon fiber composite parts can be washed and waxed like any other parts. Use a clear or black pigmented wax. See *Composite Materials* ⇨ *218*.

Protecting Exterior Bright Metal Moldings

Caution

Failure to clean and protect the bright metal moldings can result in a hazy white finish or pitting. This damage would not be covered by the vehicle warranty.

The bright metal moldings on the vehicle are aluminum, chrome or stainless steel. To prevent damage always follow these cleaning instructions:

- Be sure the molding is cool to the touch before applying any cleaning solution.
- Use only approved cleaning solutions for aluminum, chrome or stainless steel. Some cleaners are highly acidic or contain alkaline substances and can damage the moldings.
- Always dilute a concentrated cleaner according to the manufacturer's instructions.
- Do not use cleaners that are not intended for automotive use.
- Use a nonabrasive wax on the vehicle after washing to protect and extend the molding finish.

Cleaning Exterior Lamps/Lenses, Emblems, Decals, and Stripes

Use only lukewarm or cold water, a soft cloth, and a car washing soap to clean exterior lamps, lenses, emblems, decals, and stripes. Follow instructions under "Washing the Vehicle" previously in this section.

Lamp covers are made of plastic, and some have a UV protective coating. Do not clean or wipe them when dry.

Do not use any of the following on lamp covers:

- Abrasive or caustic agents.
- Washer fluids and other cleaning agents in higher concentrations than suggested by the manufacturer.
- Solvents, alcohols, fuels, or other harsh cleaners.
- Ice scrapers or other hard items.
- Aftermarket appearance caps or covers while the lamps are illuminated, due to excessive heat generated.

Caution

Failure to clean lamps properly can cause damage to the lamp cover that would not be covered by the vehicle warranty.

Caution

Using wax on low gloss black finish stripes can increase the gloss level and create a non-uniform finish. Clean low gloss stripes with soap and water only.

Air Intakes

Clear debris from the air intakes, between the hood and windshield, when washing the vehicle.

Shutter System

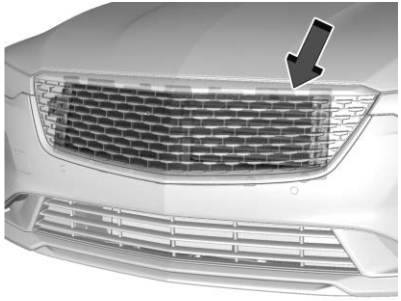

The vehicle may have a shutter system designed to help improve fuel economy. Keep the shutter system clear of debris, snow and ice. If the check engine light is activated, please check to see if the shutter system is clear of debris, snow or ice.

Windshield and Wiper Blades

Clean the outside of the windshield with glass cleaner.

Clean rubber blades using a lint-free cloth or paper towel soaked with windshield washer fluid or a mild detergent. Wash the windshield thoroughly when cleaning the blades. Bugs, road grime, sap, and a buildup of vehicle wash/wax treatments may cause wiper streaking.

Replace the wiper blades if they are worn or damaged. Damage can be caused by extreme dusty conditions, sand, salt, heat, sun, snow, and ice.

Weatherstrips

Apply weatherstrip lubricant on weatherstrips to make them last longer, seal better, and not stick or squeak. Lubricate weatherstrips at least once a year. Hot, dry climates may require more frequent application. Black marks from rubber material on painted surfaces can be removed by rubbing with a clean cloth. See *Recommended Fluids and Lubricants* ⇨ *391*.

Tires

Use a stiff brush with tire cleaner to clean the tires.

Caution

Using petroleum-based tire dressing products on the vehicle may damage the paint finish and/or tires. When applying a tire dressing, always wipe off any overspray from all painted surfaces on the vehicle.

Wheels and Wheel Trim

Use a soft, clean cloth with mild soap and water to clean the wheels. After rinsing thoroughly with clean water, dry with a soft, clean towel. A wax may then be applied.

Caution

Chrome wheels and chrome wheel trim may be damaged if the vehicle is not washed after driving on roads that have been sprayed with magnesium chloride or calcium chloride. These are used on roads for conditions such as dust and ice. Always wash the chrome with soap and water after exposure.

Caution

To avoid surface damage on wheels and wheel trim, do not use strong soaps, chemicals, abrasive polishes, cleaners, or brushes. Use only GM approved cleaners. Do not drive the vehicle through an automatic car wash that uses silicon carbide tire/wheel cleaning brushes. Damage could occur and the repairs would not be covered by the vehicle warranty.

Brake System

Visually inspect brake lines and hoses for proper hook-up, binding, leaks, cracks, chafing, etc. Inspect disc brake pads for wear and rotors for surface condition. Inspect drum brake linings/shoes for wear or cracks. Inspect all other brake parts.

Steering, Suspension, and Chassis Components

Visually inspect steering, suspension, and chassis components for damaged, loose, or missing parts or signs of wear at least once a year.

Inspect power steering for proper attachment, connections, binding, leaks, cracks, chafing, etc.

Visually check constant velocity joint boots and axle seals for leaks.

Body Component Lubrication

Lubricate all key lock cylinders, hood hinges, liftgate hinges, and the steel fuel door hinge, unless the components are plastic. Applying silicone grease on weatherstrips with a clean cloth will make them last longer, seal better, and not stick or squeak.

Underbody Maintenance

At least twice a year, spring and fall, use plain water to flush any corrosive materials from the underbody. Take care to thoroughly clean any areas where mud and other debris can collect.

Do not directly power wash the transfer case and/or front/rear axle output seals. High pressure water can overcome the seals and contaminate the fluid. Contaminated fluid will decrease the life of the transfer case and/or axles and should be replaced

Sheet Metal Damage

If the vehicle is damaged and requires sheet metal repair or replacement, make sure the body repair shop applies anti-corrosion material to parts repaired or replaced to restore corrosion protection.

Original manufacturer replacement parts will provide the corrosion protection while maintaining the vehicle warranty.

Finish Damage

Quickly repair minor chips and scratches with touch-up materials available from your dealer to avoid corrosion. Larger areas of finish damage can be corrected in your dealer's body and paint shop.

Chemical Paint Spotting

Airborne pollutants can fall upon and attack painted vehicle surfaces causing blotchy, ring-shaped discolorations, and small, irregular

dark spots etched into the paint surface. See “Finish Care” previously in this section.

Interior Care

To prevent dirt particle abrasions, regularly clean the vehicle's interior. Immediately remove any soils. Newspapers or dark garments can transfer color to the vehicle’s interior.

Use a soft bristle brush to remove dust from knobs and crevices on the instrument cluster. Using a mild soap solution, immediately remove hand lotions, sunscreen, and insect repellent from all interior surfaces or permanent damage may result.

Use cleaners specifically designed for the surfaces being cleaned to prevent permanent damage. Apply all cleaners directly to the cleaning cloth. Do not spray cleaners on any switches or controls. Remove cleaners quickly.

Before using cleaners, read and follow all safety instructions on the label. While cleaning the interior, open the doors and windows to get proper ventilation.

To prevent damage, do not clean the interior using the following cleaners or techniques:

- Never use a razor or any other sharp object to remove soil from any interior surface.
- Never use a brush with stiff bristles.
- Never rub any surface aggressively or with too much pressure.
- Do not use laundry detergents or dishwashing soaps with degreasers. For liquid cleaners, use approximately 20 drops per 3.8 L (1 gal) of water. A concentrated soap solution will create streaks and attract dirt. Do not use solutions that contain strong or caustic soap.
- Do not heavily saturate the upholstery when cleaning.
- Do not use solvents or cleaners containing solvents.

Interior Glass

To clean, use a terry cloth fabric dampened with water. Wipe droplets left behind with a clean dry cloth. If necessary, use a commercial glass cleaner after cleaning with plain water.

Caution

To prevent scratching, never use abrasive cleaners on automotive glass. Abrasive cleaners or aggressive cleaning may damage the rear window defogger.

Cleaning the windshield with water during the first three to six months of ownership will reduce tendency to fog.

Speaker Covers

Vacuum around a speaker cover gently, so that the speaker will not be damaged. Clean spots with water and mild soap.

Coated Moldings

Coated moldings should be cleaned.

- When lightly soiled, wipe with a sponge or soft, lint-free cloth dampened with water.
- When heavily soiled, use warm soapy water.

Fabric/Carpet/Suede

Start by vacuuming the surface using a soft brush attachment. If a rotating vacuum brush attachment is being used, only use it on the floor carpet. Before cleaning, gently remove as much of the soil as possible:

- Gently blot liquids with a paper towel. Continue blotting until no more soil can be removed.
- For solid soils, remove as much as possible prior to vacuuming.

To clean:

1. Saturate a clean, lint-free colorfast cloth with water. Microfiber cloth is recommended to prevent lint transfer to the fabric or carpet.
2. Remove excess moisture by gently wringing until water does not drip from the cleaning cloth.
3. Start on the outside edge of the soil and gently rub toward the center. Fold the cleaning cloth to a clean area frequently to prevent forcing the soil in to the fabric.
4. Continue gently rubbing the soiled area until there is no longer any color transfer from the soil to the cleaning cloth.
5. If the soil is not completely removed, use a mild soap solution followed only by plain water.

If the soil is not completely removed, it may be necessary to use a commercial upholstery cleaner or spot lifter. Test a small hidden area for colorfastness before using a commercial upholstery cleaner or spot lifter. If ring formation occurs, clean the entire fabric or carpet.

After cleaning, use a paper towel to blot excess moisture.

Cleaning High Gloss Surfaces and Vehicle Information and Radio Displays

Use a microfiber cloth on high gloss surfaces or vehicle displays. First, use a soft bristle brush to remove dirt that can scratch the surface. Then gently clean by rubbing with a microfiber cloth. Never use window cleaners or solvents. Periodically hand wash the microfiber cloth separately, using mild soap. Do not use bleach or fabric softener. Rinse thoroughly and air dry before next use.

Caution

Do not attach a device with a suction cup to the display. This may cause damage and would not be covered by the vehicle warranty.

Instrument Panel, Leather, Vinyl, Other Plastic Surfaces, Low Gloss Paint Surfaces, and Natural Open Pore Wood Surfaces

Use a soft microfiber cloth dampened with water to remove dust and loose dirt. For a more thorough cleaning, use a soft microfiber cloth dampened with a mild soap solution.

Caution

Soaking or saturating leather, especially perforated leather, as well as other interior surfaces, may cause permanent damage. Wipe excess moisture from these surfaces

(Continued)

Caution (Continued)

after cleaning and allow them to dry naturally. Never use heat, steam, or spot removers. Do not use cleaners that contain silicone or wax-based products. Cleaners containing these solvents can permanently change the appearance and feel of leather or soft trim, and are not recommended.

Do not use cleaners that increase gloss, especially on the instrument panel. Reflected glare can decrease visibility through the windshield under certain conditions.

Caution

Use of air fresheners may cause permanent damage to plastics and painted surfaces. If an air freshener comes in contact with any plastic or painted surface in the vehicle, blot immediately and clean with a soft cloth dampened with a mild soap solution. Damage caused by air fresheners would not be covered by the vehicle warranty.

Cargo Cover and Convenience Net

If equipped, wash with warm water and mild detergent. Do not use chlorine bleach. Rinse with cold water, and then dry completely.

Care of Seat Belts

Keep belts clean and dry.

⚠ Warning

Do not bleach or dye seat belt webbing. It may severely weaken the webbing. In a crash, they might not be able to provide adequate protection. Clean and rinse seat belt webbing only with mild soap and lukewarm water. Allow the webbing to dry.

Floor Mats

⚠ Warning

If a floor mat is the wrong size or is not properly installed, it can interfere with the pedals. Interference with the pedals can

(Continued)

Warning (Continued)

cause unintended acceleration and/or increased stopping distance which can cause a crash and injury. Make sure the floor mat does not interfere with the pedals.

Use the following guidelines for proper floor mat usage.

- The original equipment floor mats were designed for your vehicle. If the floor mats need replacing, it is recommended that GM certified floor mats be purchased. Non-GM floor mats may not fit properly and may interfere with the pedals. Always check that the floor mats do not interfere with the pedals.
- Do not use a floor mat if the vehicle is not equipped with a floor mat retainer on the driver side floor.
- Use the floor mat with the correct side up. Do not turn it over.
- Do not place anything on top of the driver side floor mat.
- Use only a single floor mat on the driver side.

- Do not place one floor mat on top of another.

The floor mats are held in place by button-type retainers.

Removing and Replacing the Floor Mats

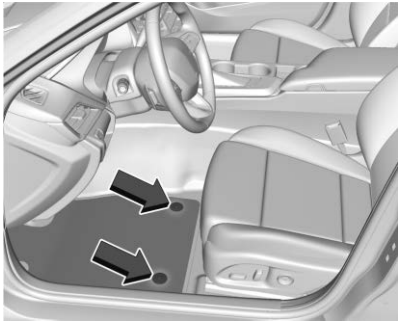

1. Pull up on the rear of the floor mat to unlock the retainers and remove.
2. Reinstall by lining up the floor mat retainer openings over the carpet retainers and snap into position.
3. Make sure the floor mat is properly secured in place. Verify the floor mat does not interfere with the pedals.

Cleaning Rubber Floor Mats (All-Weather Mats and Floor Liners)

⚠ Warning

Do not use cleaners that contain silicone, wax-based products, or cleaners that increase gloss on rubber floor mats/liners. These cleaners can permanently change the appearance and feel of the rubber and can make the floor mats/liners slippery. Your foot could slip while operating the vehicle, and you could lose control, resulting in a crash. You or others could be injured.

Use a soft cloth and/or a brush dampened with water to remove dust and loose dirt. For more thorough cleaning, use a mild soap solution.

Service and Maintenance

General Information
General Information 379

Maintenance Schedule
Maintenance Schedule 380

Special Application Services
Special Application Services 388

Additional Maintenance and Care
Additional Maintenance and Care 388

Recommended Fluids, Lubricants, and Parts
Recommended Fluids and Lubricants 391
Maintenance Replacement Parts 392

Maintenance Records
Maintenance Records 394

General Information

Your vehicle is an important investment. This section describes the required maintenance for the vehicle. Follow this schedule to help protect against major repair expenses resulting from neglect or inadequate maintenance. It may also help to maintain the value of the vehicle if it is sold. It is the responsibility of the owner to have all required maintenance performed.

Your dealer has trained technicians who can perform required maintenance using genuine replacement parts. They have up-to-date tools and equipment for fast and accurate diagnostics. Many dealers have extended evening and Saturday hours, courtesy transportation, and online scheduling to assist with service needs.

Your dealer recognizes the importance of providing competitively priced maintenance and repair services. With trained technicians, the dealer is the place for routine maintenance such as oil changes and tire rotations and additional maintenance items like tires, brakes, batteries, and wiper blades.

Caution

Damage caused by improper maintenance can lead to costly repairs and may not be covered by the vehicle warranty. Maintenance intervals, checks, inspections, recommended fluids, and lubricants are important to keep the vehicle in good working condition.

Do not have chemical flushes that are not approved by GM performed on the vehicle. The use of flushes, solvents, cleaners, or lubricants that are not approved by GM could damage the vehicle, requiring expensive repairs that are not covered by the vehicle warranty.

The Tire Rotation and Required Services are the responsibility of the vehicle owner. It is recommended to have your dealer perform these services every 12 000 km/7,500 mi. Proper vehicle maintenance helps to

keep the vehicle in good working condition, improves fuel economy, and reduces vehicle emissions.

Because of the way people use vehicles, maintenance needs vary. There may need to be more frequent checks and services. The Additional Required Services - Normal are for vehicles that:

- Carry passengers and cargo within recommended limits on the Tire and Loading Information label. See *Vehicle Load Limits* ⇨ *214*.
- Are driven on reasonable road surfaces within legal driving limits.
- Use the recommended fuel. See *Recommended Fuel (LSY 2.0L L4 Turbo Engine)* ⇨ *293* or *Recommended Fuel (L3B 2.7L L4 Turbo Engine)* ⇨ *294*.

Refer to the information in the Maintenance Schedule Additional Required Services - Normal chart.

The Additional Required Services - Severe are for vehicles that are:

- Mainly driven in heavy city traffic in hot weather.
- Mainly driven in hilly or mountainous terrain.
- Used for high speed or competitive driving.
- Used for taxi, police, or delivery service.

Refer to the information in the Maintenance Schedule Additional Required Services - Severe chart.

⚠ Warning

Performing maintenance work can be dangerous and can cause serious injury. Perform maintenance work only if the required information, proper tools, and equipment are available. If they are not, see your dealer to have a trained technician do the work. See *Doing Your Own Service Work* ⇨ *306*.

Maintenance Schedule

Owner Checks and Services

Check the engine oil level. See *Engine Oil* ⇨ *312*.

Once a Month

- Check the tire inflation pressures. See *Tire Pressure* ⇨ *346*.
- Inspect the tires for wear. See *Tire Inspection* ⇨ *352*.
- Check the windshield washer fluid level. See *Washer Fluid* ⇨ *323*.

Engine Oil Change

When the CHANGE ENGINE OIL SOON message displays, have the engine oil and filter changed within the next 1 000 km (600 mi). If driven under the best conditions, the engine oil life system may not indicate the need for vehicle service for up to a year. The engine oil and filter must be changed at least once a year and the

oil life system must be reset. Your trained dealer technician can perform this work. If the engine oil life system is reset accidentally, service the vehicle within 5 000 km (3,000 mi) since the last service. Reset the oil life system when the oil is changed. See *Engine Oil Life System* ⇨ *314*.

Air Conditioning Desiccant (Replace Every Seven Years)

The air conditioning system requires maintenance every seven years. This service requires replacement of the desiccant to help the longevity and efficient operation of the air conditioning system. This service can be complex. See your dealer.

Tire Rotation and Required Services Every 12 000 km (7,500 mi)

Rotate the tires, if recommended for the vehicle, and perform the following services. See *Tire Rotation* ⇨ *352*.

- Check engine oil level and oil life percentage. If needed, change engine oil and filter, and reset oil life system. See *Engine Oil* ⇨ *312* and *Engine Oil Life System* ⇨ *314*.
- If equipped, check the air filter life percentage. If necessary, replace the engine air filter and reset the engine air filter life system. See *Engine Air Filter Life System* ⇨ *315*. If the vehicle is not equipped with the engine air filter life system, inspect the engine air cleaner filter. See *Engine Air Cleaner/Filter* ⇨ *316*.
- Check engine coolant level. See *Cooling System* ⇨ *317*.
- Check windshield washer fluid level. See *Washer Fluid* ⇨ *323*.
- Check tire inflation pressures. See *Tire Pressure* ⇨ *346*.
- Inspect tire wear. See *Tire Inspection* ⇨ *352*.
- Visually check for fluid leaks.
- Inspect brake system. See *Exterior Care* ⇨ *370*.
- Visually inspect steering, suspension, and chassis components for damage, including cracks or tears in the rubber boots, loose or missing parts, or signs of wear at least once a year. See *Exterior Care* ⇨ *370*.
- Inspect power steering for proper attachment, connections, binding, leaks, cracks, chafing, etc.

- Visually inspect halfshafts and drive shafts for excessive wear, lubricant leaks, and/or damage including: tube dents or cracks, constant velocity joint or universal joint looseness, cracked or missing boots, loose or missing boot clamps, center bearing excessive looseness, loose or missing fasteners, and axle seal leaks.
- Check restraint system components. See *Safety System Check* ⇨ *47*.
- Visually inspect fuel system for damage or leaks.
- Visually inspect exhaust system and nearby heat shields for loose or damaged parts.
- Lubricate body components. See *Exterior Care* ⇨ *370*.
- Check parking brake and automatic transmission park mechanism. See *Park Brake and P (Park) Mechanism Check* ⇨ *327*.
- Check accelerator pedal for damage, high effort, or binding. Replace if needed.
- Visually inspect gas strut for signs of wear, cracks, or other damage. Check the hold open ability of the strut. If the hold open is low, service the gas strut. See *Gas Strut(s)* ⇨ *328*.
- Inspect sunroof track and seal, if equipped. See *Sunroof* ⇨ *28*.

Maintenance Schedule Additional Required Services - Normal	**12 000 km/7,500 mi**	**24 000 km/15,000 mi**	**36 000 km/22,500 mi**	**48 000 km/30,000 mi**	**60 000 km/37,500 mi**	**72 000 km/45,000 mi**	**84 000 km/52,500 mi**	**96 000 km/60,000 mi**	**108 000 km/67,500 mi**	**120 000 km/75,000 mi**	**132 000 km/82,500 mi**	**144 000 km/90,000 mi**	**156 000 km/97,500 mi**	**168 000 km/105,000 mi**	**180 000 km/112,500 mi**	**192 000 km/120,000 mi**	**204 000 km/127,500 mi**	**216 000 km/135,000 mi**	**228 000 km/142,500 mi**	**240 000 k m/150,000 mi**
Rotate tires, if recommended for the vehicle, and perform Required Services. (1) Check engine oil level and oil life percentage. Change engine oil and filter, if needed. If equipped, check engine air filter life percentage and status. Change engine air filter, if needed.	✓	✓	✓	✓	✓	✓	✓	✓	✓	✓	✓	✓	✓	✓	✓	✓	✓	✓	✓	✓
Replace passenger compartment air filter. (2)			✓			✓			✓			✓			✓			✓		
If the vehicle is not equipped with the engine air filter life system, replace engine air cleaner filter. (3)						✓						✓						✓		
Inspect evaporative control system. (4)						✓						✓						✓		
Replace spark plugs. Inspect spark plug wires and/or boots.								✓								✓				
Change transfer case fluid, if equipped with AWD. (5)													✓							
Change rear axle fluid, if equipped with limited slip differential. (5)						✓						✓						✓		

Maintenance Schedule Additional Required Services - Normal	12 000 km/7,500 mi	24 000 km/15,000 mi	36 000 km/22,500 mi	48 000 km/30,000 mi	60 000 km/37,500 mi	72 000 km/45,000 mi	84 000 km/52,500 mi	96 000 km/60,000 mi	108 000 km/67,500 mi	120 000 km/75,000 mi	132 000 km/82,500 mi	144 000 km/90,000 mi	156 000 km/97,500 mi	168 000 km/105,000 mi	180 000 km/112,500 mi	192 000 km/120,000 mi	204 000 km/127,500 mi	216 000 km/135,000 mi	228 000 km/142,500 mi	240 000 km/150,000 mi
Change rear axle fluid, without limited slip differential. (5)																				✓
Change front axle fluid, if equipped with AWD. (5)																				✓
Drain and fill engine cooling system. (6)																				✓
Visually inspect accessory drive belts. (7)																				✓
Replace brake fluid. (8)																				
Replace windshield wiper blades. (9)		✓		✓		✓		✓		✓		✓		✓		✓		✓		✓
Replace hood and/or body lift support gas struts. (10)										✓										✓
Replace air conditioning desiccant. (11)																				

Footnotes — Maintenance Schedule Additional Required Services - Normal

(1) Vehicles with different size front and rear tires do not have tire rotation. See *Tire Rotation* ⇨ *352*.

(2) Or every two years, whichever comes first. More frequent passenger compartment air filter replacement may be needed if driving in areas with heavy traffic, poor air quality, high dust levels, or environmental allergens. Passenger compartment air filter replacement may also be needed if there is reduced airflow, window fogging, or odors. Your GM dealer can help determine when to replace the filter.

(3) Or every four years, whichever comes first. If driving in dusty conditions, inspect the filter at each oil change or more often as needed. See *Engine Air Cleaner/Filter* ⇨ *316*.

(4) Visually check all fuel and vapor lines and hoses for proper attachment, connection, routing, and condition.

(5) Do not directly power wash the transfer case and/or front/rear axle output seals. High pressure water can overcome the seals and contaminate the transfer case fluid. Contaminated fluid will decrease the life of the transfer case and/or axles and should be replaced.

(6) Or every five years, whichever comes first. See *Cooling System* ⇨ *317*.

(7) Or every 10 years, whichever comes first. Inspect for fraying, excessive cracking, or damage; replace, if needed.

(8) Replace brake fluid every five years. See *Brake Fluid* ⇨ *325*.

(9) Or every 12 months, whichever comes first. See *Wiper Blade Replacement* ⇨ *327*.

(10) Or every 10 years, whichever comes first. See *Gas Strut(s)* ⇨ *328*.

(11) Replace air conditioning desiccant every seven years.

Maintenance Schedule Additional Required Services - Severe	**12 000 km/7,500 mi**	**24 000 km/15,000 mi**	**36 000 km/22,500 mi**	**48 000 km/30,000 mi**	**60 000 km/37,500 mi**	**72 000 km/45,000 mi**	**84 000 km/52,500 mi**	**96 000 km/60,000 mi**	**108 000 km/67,500 mi**	**120 000 km/75,000 mi**	**132 000 km/82,500 mi**	**144 000 km/90,000 mi**	**156 000 km/97,500 mi**	**168 000 km/105,000 mi**	**180 000 km/112,500 mi**	**192 000 km/120,000 mi**	**204 000 km/127,500 mi**	**216 000 km/135,000 mi**	**228 000 km/142,500 mi**	**240 000 km/150,000 mi**
Rotate tires, if recommended for the vehicle, and perform Required Services. (1) Check engine oil level and oil life percentage. Change engine oil and filter, if needed. If equipped, check engine air filter life percentage and status. Change engine air filter, if needed.	✓	✓	✓	✓	✓	✓	✓	✓	✓	✓	✓	✓	✓	✓	✓	✓	✓	✓	✓	✓
Replace passenger compartment air filter. (2)			✓			✓			✓			✓			✓			✓		
If the vehicle is not equipped with the engine air filter life system, replace engine air cleaner filter. (3)						✓						✓						✓		
Inspect evaporative control system. (4)						✓						✓						✓		
Replace spark plugs. Inspect spark plug wires and/or boots.								✓								✓				
Change automatic transmission fluid and filter.						✓						✓						✓		
Change transfer case fluid, if equipped with AWD. (5)						✓						✓						✓		
Change rear axle fluid, if equipped with limited slip differential. (5)						✓						✓						✓		

Maintenance Schedule Additional Required Services - Severe	12 000 km/7,500 mi	24 000 km/15,000 mi	36 000 km/22,500 mi	48 000 km/30,000 mi	60 000 km/37,500 mi	72 000 km/45,000 mi	84 000 km/52,500 mi	96 000 km/60,000 mi	108 000 km/67,500 mi	120 000 km/75,000 mi	132 000 km/82,500 mi	144 000 km/90,000 mi	156 000 km/97,500 mi	168 000 km/105,000 mi	180 000 km/112,500 mi	192 000 km/120,000 mi	204 000 km/127,500 mi	216 000 km/135,000 mi	228 000 km/142,500 mi	240 000 km/150,000 mi
Change rear axle fluid, without limited slip differential. (5)										✓										✓
Change front axle fluid, if equipped with AWD. (5)						✓						✓						✓		
Drain and fill engine cooling system. (6)																				✓
Visually inspect accessory drive belts. (7)																				✓
Replace brake fluid. (8)																				
Replace windshield wiper blades. (9)		✓		✓		✓		✓		✓		✓		✓		✓		✓		✓
Replace hood and/or body lift support gas struts. (10)										✓										✓
Replace air conditioning desiccant. (11)																				

Footnotes — Maintenance Schedule Additional Required Services - Severe

(1) Vehicles with different size front and rear tires do not have tire rotation. See *Tire Rotation* ⇨ *352*.

(2) Or every two years, whichever comes first. More frequent passenger compartment air filter replacement may be needed if driving in areas with heavy traffic, poor air quality, high dust levels, or environmental allergens. Passenger compartment air filter replacement may also be needed if there is reduced airflow, window fogging, or odors. Your GM dealer can help determine when to replace the filter.

(3) Or every four years, whichever comes first. If driving in dusty conditions, inspect the filter at each oil change or more often as needed. See *Engine Air Cleaner/Filter* ⇨ *316*.

(4) Visually check all fuel and vapor lines and hoses for proper attachment, connection, routing, and condition.

(5) Do not directly power wash the transfer case and/or front/rear axle output seals. High pressure water can overcome the seals and contaminate the transfer case fluid. Contaminated fluid will decrease the life of the transfer case and/or axles and should be replaced.

(6) Or every five years, whichever comes first. See *Cooling System* ⇨ *317*.

(7) Or every 10 years, whichever comes first. Inspect for fraying, excessive cracking, or damage; replace, if needed.

(8) Replace brake fluid every five years. See *Brake Fluid* ⇨ *325*.

(9) Or every 10 years, whichever comes first. See *Gas Strut(s)* ⇨ *328*.

(10) Replace air conditioning desiccant every seven years.

Special Application Services

- Severe Commercial Use Vehicles Only: Lubricate chassis components every oil change.
- Have underbody flushing service performed. See "Underbody Maintenance" in *Exterior Care* ⇨ *370*.

Additional Maintenance and Care

Your vehicle is an important investment and caring for it properly may help to avoid future costly repairs. To maintain vehicle performance, additional maintenance services may be required.

It is recommended that your dealer perform these services — their trained dealer technicians know your vehicle best. Your dealer can also perform a thorough assessment with a multi-point inspection to recommend when your vehicle may need attention.

The following list is intended to explain the services and conditions to look for that may indicate services are required.

Battery

The 12-volt battery supplies power to start the engine and operate any additional electrical accessories.

- To avoid break-down or failure to start the vehicle, maintain a battery with full cranking power.
- Trained dealer technicians have the diagnostic equipment to test the battery and ensure that the connections and cables are corrosion-free.

Belts

- Belts may need replacing if they squeak or show signs of cracking or splitting.
- Trained dealer technicians have access to tools and equipment to inspect the belts and recommend adjustment or replacement when necessary.

Brakes

Brakes stop the vehicle and are crucial to safe driving.

- Signs of brake wear may include chirping, grinding, or squealing noises, or difficulty stopping.
- Trained dealer technicians have access to tools and equipment to inspect the brakes and recommend quality parts engineered for the vehicle.

Fluids

Proper fluid levels and approved fluids protect the vehicle's systems and components. See *Recommended Fluids and Lubricants* ⇨ *391* for GM approved fluids.

- Engine oil and windshield washer fluid levels should be checked at every fuel fill.
- Instrument cluster lights may come on to indicate that fluids may be low and need to be filled.

Hoses

Hoses transport fluids and should be regularly inspected to ensure that there are no cracks or leaks. With a multi-point inspection, your dealer can inspect the hoses and advise if replacement is needed.

Lamps

Properly working headlamps, taillamps, and brake lamps are important to see and be seen on the road.

- Signs that the headlamps need attention include dimming, failure to light, cracking, or damage. The brake lamps need to be checked periodically to ensure that they light when braking.
- With a multi-point inspection, your dealer can check the lamps and note any concerns.

Shocks and Struts

Shocks and struts help aid in control for a smoother ride.

- Signs of wear may include steering wheel vibration, bounce/sway while braking, longer stopping distance, or uneven tire wear.
- As part of the multi-point inspection, trained dealer technicians can visually inspect the shocks and struts for signs of leaking, blown seals, or damage, and can advise when service is needed.

Tires

Tires need to be properly inflated, rotated, and balanced. Maintaining the tires can save money and fuel, and can reduce the risk of tire failure.

- Signs that the tires need to be replaced include three or more visible treadwear indicators; cord or fabric showing through the rubber; cracks or cuts in the tread or sidewall; or a bulge or split in the tire.
- Trained dealer technicians can inspect and recommend the right tires. Your dealer can also provide tire/wheel balancing services to ensure smooth vehicle operation at all speeds. Your dealer sells and services name brand tires.

Vehicle Care

To help keep the vehicle looking like new, vehicle care products are available from your dealer. For information on how to clean and protect the vehicle's interior and exterior, see *Interior Care* ⇨ *375* and *Exterior Care* ⇨ *370*.

Wheel Alignment

Wheel alignment is critical for ensuring that the tires deliver optimal wear and performance.

- Signs that the alignment may need to be adjusted include pulling, improper vehicle handling, or unusual tire wear.
- Your dealer has the required equipment to ensure proper wheel alignment.

Windshield

For safety, appearance, and the best viewing, keep the windshield clean and clear.

- Signs of damage include scratches, cracks, and chips.
- Trained dealer technicians can inspect the windshield and recommend proper replacement if needed.

Wiper Blades

Wiper blades need to be cleaned and kept in good condition to provide a clear view.

- Signs of wear include streaking, skipping across the windshield, and worn or split rubber.
- Trained dealer technicians can check the wiper blades and replace them when needed.

Recommended Fluids, Lubricants, and Parts

Recommended Fluids and Lubricants

Fluids and lubricants identified below by name or specification, including fluids or lubricants not listed here, can be obtained from your dealer.

Usage	Fluid/Lubricant
Automatic Transmission (8-Speed Transmission)	DEXRON-HP Automatic Transmission Fluid.
Automatic Transmission (10-Speed Transmission)	DEXRON ULV Automatic Transmission Fluid.
Chassis Lubrication	Chassis lubricant meeting requirements of NLGI #2, Category LB or GC-LB.
Engine Coolant	50/50 mixture of clean, drinkable water and use only DEX-COOL Coolant. See *Cooling System* ⇨ *317*.
Engine Oil	Engine oil meeting the dexos1 specification of the proper SAE viscosity grade. ACDelco dexos1 full synthetic is recommended. See *Engine Oil* ⇨ *312*.
Hood Latch Assembly, Secondary Latch, Pivots, Spring Anchor, and Release Pawl	Lubriplate Lubricant Aerosol or lubricant meeting requirements of NLGI #2, Category LB or GC-LB.
Hydraulic Brake System	DOT 4 Hydraulic Brake Fluid.
Key Lock Cylinders, Hood and Door Hinges	Multi-Purpose Lubricant, Superlube. See your dealer.
Rear Axle/Front Axle (All-Wheel Drive)	See your dealer.
Windshield Washer	Automotive windshield washer fluid that meets regional freeze protection requirements.

Maintenance Replacement Parts

Replacement parts identified below by name, part number, or specification can be obtained from your dealer.

Part	GM Part Number	ACDelco Part Number
Engine Air Cleaner/Filter		
2.0L L4 Engine	84498926	A3245C
2.7L L4 Engine	84498926	A3245C
Engine Oil Filter		
2.0L L4 engine	55495105	PF66
2.7L L4 engine	55495105	PF66
Passenger Compartment Air Filter		
Particulate	13508023	CF185
Carbon	23195727	CF184

Part	GM Part Number	ACDelco Part Number
Spark Plugs		
2.0L L4 engine	55504354	41–103–IP
2.7L L4 engine	12688094	41–106–IP
Wiper Blades		
Driver Side – 55 cm (22 in)	84613732	—
Passenger Side – 45 cm (18 in)	84574892	—

Maintenance Records

After the scheduled services are performed, record the date, odometer reading, who performed the service, and the type of services performed in the boxes provided. Retain all maintenance receipts.

Date	Odometer Reading	Serviced By	Maintenance Stamp	Services Performed

Technical Data

Vehicle Identification

Vehicle Identification Number (VIN) 395
Service Parts Identification 395

Vehicle Data

Capacities and Specifications 396
Engine Drive Belt Routing 398

Vehicle Identification

Vehicle Identification Number (VIN)

This legal identifier is in the front corner of the instrument panel, on the driver side of the vehicle. It can be seen through the windshield from outside. The Vehicle Identification Number (VIN) also appears on the Vehicle Certification label and certificates of title and registration.

Engine Identification

The eighth character in the VIN is the engine code. This code identifies the vehicle's engine, specifications, and replacement parts. See “Engine Specifications” under *Capacities and Specifications* ⇨ *396* for the vehicle's engine code.

Service Parts Identification

There may be a large barcode on the certification label on the center pillar that you can scan for the following information:

- Vehicle Identification Number (VIN)
- Model designation
- Paint information
- Production options

If there is not a large barcode on this label, then you will find this same information on a label inside of the trunk.

Vehicle Data

Capacities and Specifications

Application	Capacities	
	Metric	English
Air Conditioning Refrigerant	For the air conditioning system refrigerant type and charge amount, see the refrigerant label under the hood. See your dealer for more information.	
Engine Cooling System*		
2.0L L4 Engine	10.4 L	11.0 qt
2.7L L4 Engine	13.0 L	13.7 qt
Engine Oil with Filter		
2.0L L4 Engine	5.0 L	5.3 qt
2.7L L4 Engine	5.7 L	6.0 qt
Fuel Tank	66.0 L	17.5 gal
Transfer Case – AWD	0.78 L	0.8 qt
Front Axle – AWD	0.4 L	0.42 qt

Application	Capacities	
	Metric	English
Rear Axle		
Open Differential - Small	0.75 L	0.79 qt
Open Differential - Large	1.0 L	1.0 qt
Mechanical Limited Slip	1.0 L	1.0 qt
Wheel Nut Torque (M12)	140 N•m	100 lb ft
All capacities are approximate. When adding, be sure to fill to the approximate level, as recommended in this manual. Recheck fluid level after filling.		
*Engine cooling system capacity values are based on the entire cooling system and its components.		

Engine Specifications

Engine	VIN Code	Transmission	Spark Plug Gap
2.0L L4 Turbo Engine (LSY)	K	Automatic	0.65–0.75 mm (0.026–0.030 in)
2.7L L4 Turbo Engine (L3B)	L	Automatic	0.65–0.75 mm (0.026–0.030 in)
Spark plug gaps are preset by the manufacturer. Re-gapping the spark plug is not recommended and can damage the spark plug.			

Engine Drive Belt Routing

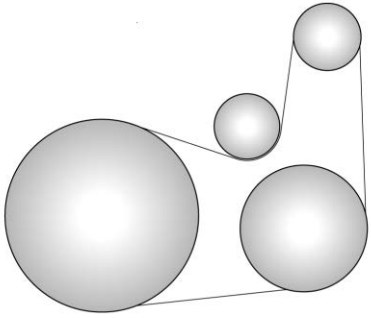

2.0L L4 Engine (LSY)

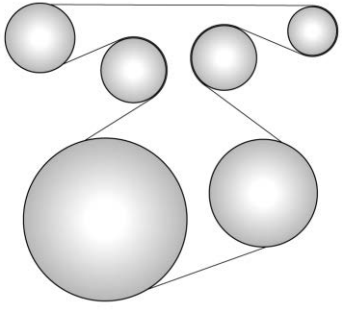

2.7L L4 Engine (L3B)

Customer Information

Customer Information

Customer Satisfaction Procedure 399
Customer Assistance Offices 401
Customer Assistance for Text Telephone (TTY) Users 402
Online Owner Center 402
GM Mobility Reimbursement Program 402
Roadside Service 403
Scheduling Service Appointments 405
Courtesy Transportation Program 405
Collision Damage Repair 406
Publication Ordering Information 408
Radio Frequency Statement 409

Reporting Safety Defects

Reporting Safety Defects to the United States Government 409
Reporting Safety Defects to the Canadian Government 409
Reporting Safety Defects to General Motors 410

Vehicle Data Recording and Privacy

Vehicle Data Recording and Privacy 410
Cybersecurity 410
Event Data Recorders 411
OnStar 412
Infotainment System 412

Customer Information

Customer Satisfaction Procedure

Your satisfaction and goodwill are important to your dealer and to Cadillac. Normally, any concerns with the sales transaction or the operation of the vehicle will be resolved by your dealer's sales or service departments. Sometimes, however, despite the best intentions of all concerned, misunderstandings can occur. If your concern has not been resolved to your satisfaction, the following steps should be taken:

STEP ONE : Discuss your concern with a member of dealership management. Normally, concerns can be quickly resolved at that level. If the matter has already been reviewed with the sales, service or parts manager, contact the owner of your dealership or the general manager.

STEP TWO : If after contacting a member of dealership management, it appears your concern cannot be resolved by your dealership without further help, in the U.S., call the Cadillac Customer Assistance Center at 1-800–458–8006. In Canada, call the Canadian Cadillac Customer Care Centre at 1-888-446-2000.

We encourage you to call the toll-free number in order to give your inquiry prompt attention. Have the following information available to give the Customer Assistance representative:

- Vehicle Identification Number (VIN). This is available from the vehicle registration or title, or the plate at the top left of the instrument panel and visible through the windshield.
- Dealership name and location.
- Vehicle delivery date and present mileage.

When contacting Cadillac, remember that your concern will likely be resolved at a dealer's facility. That is why we suggest following Step One first.

STEP THREE — U.S. Owners : Both General Motors and your dealer are committed to making sure you are completely satisfied with the new vehicle. However, if you continue to remain unsatisfied after following the procedure outlined in Steps One and Two, you can file with the Better Business Bureau (BBB) Auto Line Program to enforce your rights.

The BBB Auto Line Program is an out-of-court program administered by BBB National Programs, Inc. to settle automotive disputes regarding vehicle repairs or the interpretation of the New Vehicle Limited Warranty. Although you may be required to resort to this informal dispute resolution program prior to filing a court action, use of the program is free of charge and your case will generally be heard within 40 days. If you do not agree with the decision given in your case, you may reject it and proceed with any other venue for relief available to you.

You may contact the BBB Auto Line Program using the toll-free telephone number or write them at the following address:

BBB Auto Line Program
BBB National Programs, Inc.
3033 Wilson Boulevard
Suite 600
Arlington, VA 22201

Telephone: 1-800-955-5100
http://www.bbb.org/council/programs-services/dispute-handling-and-resolution/bbb-auto-line

This program is available in all 50 states and the District of Columbia. Eligibility is limited by vehicle age, mileage, and other factors. General Motors reserves the right to change eligibility limitations and/or discontinue its participation in this program.

STEP THREE — Canadian Owners : In the event that you do not feel your concerns have been addressed after following the procedure outlined in Steps One and Two, General Motors of Canada Company wants you to be aware of its participation in a no-charge mediation/arbitration program. General Motors of Canada Company has committed to binding arbitration of owner disputes involving factory-related vehicle service claims. The program provides for the review of the facts involved by an impartial third party arbiter, and may include an informal hearing before the arbiter. The program is designed so that the entire dispute settlement process, from the time you file your complaint to the final decision, should be completed in about 70 days. We believe our impartial program offers advantages over courts in most jurisdictions because it is informal, quick, and free of charge.

For further information concerning eligibility in the Canadian Motor Vehicle Arbitration Plan (CAMVAP), call toll-free 1-800-207-0685, or call the Cadillac Customer Care Centre, 1-888-446-2000, or write to:

General Motors Cadillac Customer Care Centre
General Motors of Canada Company
Mail Code: CA1-163-005
1908 Colonel Sam Drive
Oshawa, Ontario L1H 8P7

The inquiry should be accompanied by the Vehicle Identification Number (VIN).

Customer Assistance Offices

Cadillac encourages customers to call the toll-free number for assistance. However, if a customer wishes to write or e-mail Cadillac, the letter should be addressed to:

United States and Puerto Rico

Cadillac Customer Assistance Center
Cadillac Motor Car Division
P.O. Box 33169
Detroit, MI 48232-5169
www.Cadillac.com

1-800-458-8006
1-800-833-2622 (For Text Telephone devices (TTYs))
Roadside Service: 1-800-224-1400

From U.S. Virgin Islands:

1-800-496-9994

Canada

General Motors of Canada Company
Cadillac Customer Care Centre, Mail Code: CA1-163-005
1908 Colonel Sam Drive
Oshawa, Ontario L1H 8P7
www.cadillaccanada.ca

1-888-446-2000 (English/French)
Cadillac Roadside Service:
1-800-882-1112

Overseas

Contact the local General Motors Business Unit.

Customer Assistance for Text Telephone (TTY) Users

To assist customers who are deaf, hard of hearing, or speech-impaired and who use Text Telephones (TTYs), Cadillac has TTY equipment available at its Customer Assistance Center. Any TTY user can communicate with Cadillac by dialing: 1-800-833-2622. TTY users in Canada can dial 1-800-263-3830.

Online Owner Center

The Cadillac Owner Center (U.S.) my.cadillac.com

Learn more about your vehicle features, shop for and manage your connected services and OnStar plans, and access diagnostic information specific to your vehicle.

Membership Benefits

: Download owner's manuals and view vehicle-specific how-to videos.

: View maintenance schedules, alerts, and Vehicle Diagnostic Information. Schedule service appointments.

: View service records from your dealership and add your own.

: Select a dealer and view locations, maps, phone numbers, and hours.

: Track your vehicle's warranty information.

: View active recalls or search by Vehicle Identification Number (VIN). See *Vehicle Identification Number (VIN)* ⇨ *395*.

: Manage your profile and payment information. View your GM Rewards Card earnings and My Cadillac Rewards points.

: Chat with online help representatives.

Visit my.cadillac.com and create an account today.

Cadillac Owner Centre (Canada) mycadillac.ca

Visit the Cadillac Owner Centre at mycadillac.ca (English) or my.cadillac.ca (French) to access similar benefits to the U.S. site.

GM Mobility Reimbursement Program

GENERAL MOTORS MOBILITY

This program is available to qualified applicants for cost reimbursement, up to certain limits, of eligible aftermarket adaptive equipment required for the vehicle, such as hand controls or a wheelchair/scooter lift for the vehicle.

To learn about the GM Mobility program, see www.gmmobility.com or call the GM Mobility Assistance Center at 1-800-323-9935. Text Telephone (TTY) users, call 1-800-833-9935.

General Motors of Canada also has a Mobility program. See cadillaccanada.ca, or call 1-800-GM-DRIVE (800-463-7483) for details. TTY users call 1-800-263-3830.

Roadside Service

U.S.: 1-800-224-1400.

Canada: 1-800-882-1112.

Text Telephone (TTY) Users (U.S. Only): 1-888-889-2438.

Service is available 24 hours a day, 365 days a year.

Calling for Service

When calling Roadside Service, have the following information ready:

- Your name, home address, and home telephone number
- Telephone number of your location
- Location of the vehicle
- Model, year, color, and license plate number of the vehicle
- Odometer reading, Vehicle Identification Number (VIN), and delivery date of the vehicle
- Description of the problem

Coverage

Services are provided for the duration of the vehicle's powertrain warranty.

In the U.S., anyone driving the vehicle is covered. In Canada, a person driving the vehicle without permission from the owner is not covered.

Roadside Service is not a part of the New Vehicle Limited Warranty. General Motors North America and Cadillac reserve the right to make any changes or discontinue the Roadside Service program at any time without notification.

General Motors North America and Cadillac reserve the right to limit services or payment to an owner or driver if they decide the claims are made too often, or the same type of claim is made many times.

Cadillac Owner Privileges™

- **Emergency Fuel Delivery:** Delivery of enough fuel for the vehicle to get to the nearest service station.
- **Lock-Out Service:** Service to unlock the vehicle if you are locked out. A remote unlock may be available if you have OnStar. For security reasons, the driver must present identification before this service is given.
- **Emergency Tow from a Public Road or Highway:** Tow to the nearest Cadillac dealer for warranty service, or if the vehicle was in a crash and cannot be driven. Assistance is not given when the vehicle is stuck in the sand, mud, or snow.
- **Flat Tire Change:** Service to change a flat tire with a spare tire. The spare tire, if equipped, must be in good condition and properly inflated. It is your responsibility for the repair or replacement of the tire if it is not covered by the warranty.
- **Battery Jump Start:** Service to jump start a dead battery.

- **Trip Interruption Benefits and Service:** If your trip is interrupted due to a warranty failure, incidental expenses may be reimbursed during the Powertrain warranty period. Items considered are hotel, meals, and rental car or a vehicle being delivered back to the customer, up to 500 miles.

Cadillac Technician Roadside Service (U.S. Only)

Cadillac's exceptional Roadside Service is more than an auto club or towing service. It provides every Cadillac owner in the United States with the advantage of contacting a Cadillac advisor and, where available, a Cadillac trained dealer technician who can provide on-site service.

A dealer technician will travel to your location within a 30-mile radius of a participating Cadillac dealership. If beyond this radius, we will arrange to have your car towed to the nearest Cadillac dealership. Each technician travels with a specially equipped service vehicle complete with the necessary Cadillac parts and tools required to handle most roadside repairs.

Services Not Included in Roadside Service

- Impound towing caused by violation of any laws
- Legal fines
- Mounting, dismounting, or changing of snow tires, chains, or other traction devices

Service is not provided if a vehicle is in an area that is not accessible to the service vehicle or is not a regularly traveled or maintained public road, which includes ice and winter roads. Off-road use is not covered.

Services Specific to Canadian-Purchased Vehicles

- **Fuel delivery:** Reimbursement is up to 7 liters. Diesel fuel delivery may be restricted. Propane and other fuels are not provided through this service.
- **Lock-Out Service:** Vehicle registration is required.
- **Trip Interruption Benefits and Service:** Pre-authorization, original detailed receipts, and a copy of the repair orders are required. Once authorization has been received, the Roadside Service advisor will help you make arrangements and explain how to receive payment. Items considered are hotel, meals, and rental car or a vehicle being delivered back to the customer, up to 800 km.
- **Alternative Service:** If assistance cannot be provided right away, the Roadside Service advisor may give you permission to get local emergency road service. You will receive payment, up to $100, after sending the original receipt to Roadside Service. Mechanical failures may be covered, however any cost for parts and labor for repairs not covered by the warranty are the owner responsibility.

Scheduling Service Appointments

When the vehicle requires warranty service, contact your dealer and request an appointment. By scheduling a service appointment and advising the service consultant of your transportation needs, your dealer can help minimize your inconvenience.

If the vehicle cannot be scheduled into the service department immediately, keep driving it until it can be scheduled for service, unless, of course, the problem is safety related. If it is, please call your dealership, let them know this, and ask for instructions.

If your dealer requests you to bring the vehicle for service, you are urged to do so as early in the work day as possible to allow for same-day repair.

Courtesy Transportation Program

To enhance your ownership experience, we and our participating dealers are proud to offer Courtesy Transportation, a customer support program for vehicles with the Bumper-to-Bumper (Base Warranty Coverage period in Canada), extended powertrain, and/or hybrid-specific warranties in both the U.S. and Canada.

Several Courtesy Transportation options are available to assist in reducing inconvenience when warranty repairs are required.

Courtesy Transportation is not a part of the New Vehicle Limited Warranty. A separate manual entitled “Limited Warranty and Owner Assistance Information” furnished with each new vehicle provides detailed warranty coverage information.

Transportation Options

Warranty service can generally be completed while you wait. However, if you are unable to do so, your dealer may offer the following transportation options:

Shuttle Service

This includes one-way or round-trip shuttle service within reasonable time and distance parameters of your dealer's area.

Public Transportation or Fuel Reimbursement

If overnight warranty repairs are needed, and public transportation is used, the expense must be supported by original receipts and within the maximum amount allowed by GM. If U.S. customers arrange their own transportation, limited reimbursement for reasonable fuel expenses may be available. Claim amounts should reflect actual costs and be supported by original receipts. See your dealer for information.

Courtesy Rental Vehicle

For an overnight warranty repair, the dealer may provide an available courtesy rental vehicle or provide for reimbursement of a rental vehicle. Reimbursement is limited and must be supported by original receipts as well as a signed and completed rental agreement and meet state/provincial, local, and rental vehicle provider requirements. Requirements vary and may include minimum age requirements, insurance coverage, credit card, etc. Additional fees such as fuel, rental vehicle insurance, taxes, levies, usage fees, excessive mileage, or rental usage beyond the completion of the repair are also your responsibility.

It may not be possible to provide a like vehicle as a courtesy rental.

Additional Program Information

All program options, such as shuttle service, may not be available at every dealer. Contact your dealer for specific availability.

General Motors reserves the right to unilaterally modify, change, or discontinue Courtesy Transportation at any time and to resolve all questions of claim eligibility pursuant to the terms and conditions described herein at its sole discretion.

Collision Damage Repair

If the vehicle is involved in a collision and it is damaged, have the damage repaired by a qualified technician using the proper equipment and quality replacement parts. Poorly performed collision repairs diminish the vehicle resale value, and safety performance can be compromised in subsequent collisions.

Collision Parts

Genuine GM Collision parts are new parts made with the same materials and construction methods as the parts with which the vehicle was originally built. Genuine GM Collision parts are the best choice to ensure that the vehicle's designed appearance, durability, and safety are preserved.

The use of Genuine GM parts can help maintain the GM New Vehicle Limited Warranty.

Recycled original equipment parts may also be used for repair. These parts are typically removed from vehicles that were total losses in prior crashes. In most cases, the parts being recycled are from undamaged sections of the vehicle. A recycled original equipment GM part may be an acceptable choice to maintain the vehicle's originally designed appearance and safety performance; however, the history of these parts is not known. Such parts are not covered by the GM New Vehicle Limited Warranty, and any related failures are not covered by that warranty.

Aftermarket collision parts are also available. These are made by companies other than GM and may not have been tested for the vehicle. As a result, these parts may fit poorly, exhibit premature durability/corrosion problems, and may not perform properly in subsequent collisions. Aftermarket parts are not covered by the GM New Vehicle Limited

Warranty, and any vehicle failure related to such parts is not covered by that warranty.

Repair Facility

GM also recommends that you choose a collision repair facility that meets your needs before you ever need collision repairs. Your dealer may have a collision repair center with GM-trained technicians and state-of-the-art equipment, or be able to recommend a collision repair center that has GM-trained technicians and comparable equipment.

Insuring the Vehicle

Protect your investment in the GM vehicle with comprehensive and collision insurance coverage. There are significant differences in the quality of coverage afforded by various insurance policy terms. Many insurance policies provide reduced protection to the GM vehicle by limiting compensation for damage repairs by using aftermarket collision parts. Some insurance companies will not specify aftermarket collision parts. When purchasing insurance, we recommend that you ensure that the vehicle will be repaired with GM original equipment collision parts. If such insurance coverage is not available from your current insurance carrier, consider switching to another insurance carrier.

If the vehicle is leased, the leasing company may require you to have insurance that ensures repairs with Genuine GM Original Equipment Manufacturer (OEM) parts or Genuine Manufacturer replacement parts. Read the lease carefully, as you may be charged at the end of the lease for poor quality repairs.

If a Crash Occurs

If there has been an injury, call emergency services for help. Do not leave the scene of a crash until all matters have been taken care of. Move the vehicle only if its position puts you in danger, or you are instructed to move it by a police officer.

Give only the necessary information to police and other parties involved in the crash.

For emergency towing see *Roadside Service* ⇨ *403*.

Gather the following information:

- Driver name, address, and telephone number
- Driver license number
- Owner name, address, and telephone number
- Vehicle license plate number
- Vehicle make, model, and model year
- Vehicle Identification Number (VIN)
- Insurance company and policy number
- General description of the damage to the other vehicle

Choose a reputable repair facility that uses quality replacement parts. See “Collision Parts” earlier in this section.

If the airbag has inflated, see *What Will You See after an Airbag Inflates?* ⇨ *52*.

Managing the Vehicle Damage Repair Process

In the event that the vehicle requires damage repairs, GM recommends that you take an active role in its repair. If you have a pre-determined repair facility of choice, take the vehicle there, or have it towed there. Specify to the facility that any required replacement collision parts be original equipment parts, either new Genuine GM parts or recycled original GM parts. Remember, recycled parts will not be covered by the GM vehicle warranty.

Insurance pays the bill for the repair, but you must live with the repair. Depending on your policy limits, your insurance company may initially value the repair using aftermarket parts. Discuss this with the repair professional, and insist on Genuine GM parts. Remember, if the vehicle is leased, you may be obligated to have the vehicle repaired with Genuine GM parts, even if your insurance coverage does not pay the full cost.

If another party's insurance company is paying for the repairs, you are not obligated to accept a repair valuation based on that insurance company's collision policy repair limits, as you have no contractual limits with that company. In such cases, you can have control of the repair and parts choices as long as the cost stays within reasonable limits.

Publication Ordering Information

Service Manuals

Service manuals have the diagnosis and repair information on the engine, transmission, axle, suspension, brakes, electrical system, steering system, body, etc.

Customer Literature

Owner's manuals are written specifically for owners and are intended to provide basic operational information about the vehicle. The owner's manual includes the Maintenance Schedule for all models.

Customer literature publications available for purchase include owner's manuals, warranty manuals, and portfolios. Portfolios include an owner's manual, warranty manual, if applicable, and zip lock bag or pouch.

Current and Past Models

Service manuals and customer literature are available for many current and past model year GM vehicles.

To order, call 1-800-551-4123 Monday–Friday, 8:00 a.m.–6:00 p.m. eastern time

For credit card orders only (VISA, MasterCard, or Discover), see Helm, Inc. at: www.helminc.com.

To order by mail, write to:

Helm, Incorporated
Attention: Customer Service
47911 Halyard Drive
Plymouth, MI 48170

Make checks payable in U.S. funds.

Radio Frequency Statement

This vehicle uses license-exempt transmitters / receivers / systems that operate on a radio frequency that complies with Part 15/Part 18 of the Federal Communications Commission (FCC) rules and with Innovation, Science and Economic Development (ISED) Canada's license-exempt RSS(s) / RSP-100 / ICES-GEN.

Operation is subject to the following two conditions:

1. The device may not cause harmful interference.
2. The device must accept any interference received, including interference that may cause undesired operation of the device.

Changes or modifications to any of these systems by other than an authorized service facility could void authorization to use this equipment.

Reporting Safety Defects

Reporting Safety Defects to the United States Government

If you believe that your vehicle has a defect which could cause a crash or could cause injury or death, you should immediately inform the National Highway Traffic Safety Administration (NHTSA) in addition to notifying General Motors.

If NHTSA receives similar complaints, it may open an investigation, and if it finds that a safety defect exists in a group of vehicles, it may order a recall and remedy campaign. However, NHTSA cannot become involved in individual problems between you, your dealer, or General Motors.

To contact NHTSA, you may call the Vehicle Safety Hotline toll-free at 1-888-327-4236 (TTY: 1-800-424-9153); go to *http://www.safercar.gov;* or write to:

Administrator, NHTSA
1200 New Jersey Avenue, S.E.
Washington, D.C. 20590

You can also obtain other information about motor vehicle safety from *http://www.safercar.gov.*

Reporting Safety Defects to the Canadian Government

If you live in Canada, and you believe that the vehicle has a safety defect, notify Transport Canada immediately, and notify General Motors of Canada Company. Call Transport Canada at 1-800-333-0510; go to:

www.tc.gc.ca/recalls (English)

www.tc.gc.ca/rappels (French)

or write to:

Transport Canada
Motor Vehicle Safety Directorate
Defect Investigations and Recalls Division
80 Noel Street
Gatineau, QC J8Z 0A1

Reporting Safety Defects to General Motors

In addition to notifying NHTSA (or Transport Canada) in a situation like this, notify General Motors.

In the U.S., call 1-800-458-8006, or write:

Cadillac Customer Assistance Center
Cadillac Motor Car Division
P.O. Box 33169
Detroit, MI 48232-5169

In Canada, call 1-888-446-2000, or write:

Canadian Cadillac Customer Care Centre, Mail Code: CA1-163-005
General Motors of Canada Company
1908 Colonel Sam Drive
Oshawa, Ontario L1H 8P7

In Mexico, call 800-466-0805 or 800-212-234-5522.

In other Central America and Caribbean Countries, call 52-555-901-2369.

Vehicle Data Recording and Privacy

The vehicle has a number of computers that record information about the vehicle's performance and how it is driven or used. For example, the vehicle uses computer modules to monitor and control engine and transmission performance, to monitor the conditions for airbag deployment and deploy them in a crash, and, if equipped, to provide antilock braking to help the driver control the vehicle. These modules may store data to help the dealer technician service the vehicle or to help GM improve safety or features. Some modules may also store data about how the vehicle is operated, such as rate of fuel consumption or average speed. These modules may retain personal preferences, such as radio presets, seat positions, and temperature settings.

Cybersecurity

GM collects information about the use of your vehicle including operational and safety related information. We collect this information to provide, evaluate, improve, and troubleshoot our products and services and to develop new products and services. The protection of vehicle electronics systems and customer data from unauthorized outside electronic access or control is important to GM. GM maintains appropriate security standards, practices, guidelines and

controls aimed at defending the vehicle and the vehicle service ecosystem against unauthorized electronic access, detecting possible malicious activity in related networks, and responding to suspected cybersecurity incidents in a timely, coordinated and effective manner. Security incidents could impact your safety or compromise your private data. To minimize security risks, please do not connect your vehicle electronic systems to unauthorized devices or connect your vehicle to any unknown or untrusted networks (such as Bluetooth, WIFI or similar technology). In the event you suspect any security incident impacting your data or the safe operation of your vehicle, please stop operating your vehicle and contact your dealer.

Event Data Recorders

This vehicle is equipped with an event data recorder (EDR). The main purpose of an EDR is to record, in certain crash or near crash-like situations, such as an air bag deployment or hitting a road obstacle, data that will assist in understanding how a vehicle's systems performed. The EDR is designed to record data related to vehicle dynamics and safety systems for a short period of time, typically 30 seconds or less. The EDR in this vehicle is designed to record such data as:

- How various systems in your vehicle were operating;
- Whether or not the driver and passenger safety belts were buckled/fastened;
- How far (if at all) the driver was depressing the accelerator and/or brake pedal; and,
- How fast the vehicle was traveling.

These data can help provide a better understanding of the circumstances in which crashes and injuries occur.

Note

EDR data are recorded by your vehicle only if a non-trivial crash situation occurs; no data are recorded by the EDR under normal driving conditions and no personal data (e.g., name, gender, age, and crash location) are recorded. However, other parties, such as law enforcement, could combine the EDR data with the type of personally identifying data routinely acquired during a crash investigation.

To read data recorded by an EDR, special equipment is required, and access to the vehicle or the EDR is needed. In addition to the vehicle manufacturer, other parties, such as law enforcement, that have the special equipment, can read the information if they have access to the vehicle or the EDR.

GM will not access these data or share it with others except: with the consent of the vehicle owner or, if the vehicle is leased, with the consent of the lessee; in response to an official request by police or similar government office; as part of GM's defense of litigation through the discovery process; or, as required by law. Data that GM collects or receives may also be used for GM research needs or may be made available to others for research purposes, where a need is shown and the data is not tied to a specific vehicle or vehicle owner.

OnStar

If the vehicle is equipped with OnStar and has an active service plan, additional data may be collected and transmitted through the OnStar system. This includes information about the vehicle's operation; collisions involving the vehicle; the use of the vehicle and its features, including infotainment; and the location and approximate GPS speed of the vehicle. Refer to the OnStar Terms and Conditions and Privacy Statement on the OnStar website.

See *OnStar Additional Information* ⇨ *414*.

Infotainment System

If the vehicle is equipped with a navigation system as part of the infotainment system, use of the system may result in the storage of destinations, addresses, telephone numbers, and other trip information. See the infotainment section for information on stored data and for deletion instructions.

OnStar

OnStar Overview
OnStar Overview 413

OnStar Services
Emergency 414
Security 414

OnStar Additional Information
OnStar Additional Information 414

OnStar Overview

Voice Command Button

Blue OnStar Button

Red Emergency Button

This vehicle may be equipped with a comprehensive, in-vehicle system that can connect to an OnStar Advisor for Emergency, Security, Navigation, Connections, and Diagnostics Services. OnStar services may require a paid service plan and data plan. OnStar requires the vehicle battery and electrical system, cellular service, and GPS satellite signals to be available and operating. OnStar acts as a link to existing emergency service providers. OnStar may collect information about you and your vehicle, including location information. See OnStar User Terms, Privacy Statement, and Software Terms for more details including system limitations at www.onstar.com (U.S.) or www.onstar.ca (Canada).

The OnStar system status light is next to the OnStar buttons. If the status light is:

- Solid Green: System is ready.
- Flashing Green: On a call.
- Red: Indicates a problem.
- Off: System is off. Press On twice to speak with an OnStar Advisor.

Press On or call 1-888-4ONSTAR (1-888-466-7827) to speak to an Advisor.

Functionality of the Voice Command button may vary by vehicle and region.

Press to:

- Open the OnStar app on the infotainment display. See *OnStar System* ⇨ *149* for information on how to use the OnStar app.

Or

- Give OnStar Turn-by-Turn Navigation voice commands.

- Obtain and customize the Wi-Fi hotspot name or SSID and password, if equipped.

Press OnStar to connect to an Advisor to:

- Verify account information or update contact information.
- Get driving directions.
- Receive a Diagnostic check of the vehicle's key operating systems.
- Receive Roadside Service.
- Manage Wi-Fi Settings, if equipped.

Press SOS to get a priority connection to an OnStar Advisor available 24/7 to:

- Get help for an emergency.
- Be a Good Samaritan or respond to an AMBER Alert.
- Get assistance in severe weather or other crisis situations and find evacuation routes.

OnStar Services

Emergency

Emergency Services require an active safety and security plan. With Automatic Crash Response, built-in sensors can automatically alert a specially trained OnStar Advisor who is immediately connected in to the vehicle to help.

Press SOS for a priority connection to an OnStar Advisor who can contact emergency service providers, direct them to your exact location, and relay important information.

With OnStar Crisis Assist, specially trained Advisors are available 24 hours a day, 7 days a week, to provide a central point of contact, assistance, and information during a crisis.

With Roadside Service, Advisors can locate a nearby service provider to help with a flat tire, a battery jump, or an empty gas tank.

Security

If equipped, OnStar provides these services:

- With Stolen Vehicle Assistance, OnStar Advisors can use GPS to pinpoint the vehicle and help authorities quickly recover it.
- With Remote Ignition Block, if equipped, OnStar can block the engine from being restarted.
- With Stolen Vehicle Slowdown, if equipped, OnStar can work with law enforcement to gradually slow the vehicle down.

Theft Alarm Notification

If equipped, if the doors are locked and the vehicle alarm sounds, a notification by text, e-mail, or phone call will be sent. If the vehicle is stolen, an OnStar Advisor can work with authorities to recover the vehicle.

OnStar Additional Information

In-Vehicle Audio Messages

Audio messages may play important information at the following times:

- Prior to vehicle purchase. Press OnStar to set up an account.
- After change in ownership and at 90 days.

Transferring Service

Press ⓞⓝ to request account transfer eligibility information. The Advisor can cancel or change account information.

Selling/Transferring the Vehicle

Call 1-888-4ONSTAR (1-888-466-7827) immediately to terminate your OnStar or connected services if the vehicle is disposed of, sold, transferred, or if the lease ends.

Reactivation for Subsequent Owners

Press ⓞⓝ and follow the prompts to speak to an Advisor as soon as possible. The Advisor will update vehicle records and explain OnStar or connected service options.

How OnStar Service Works

Automatic Crash Response, Emergency Services, Crisis Assist, Stolen Vehicle Assistance, Remote Services, and Roadside Service are available on most vehicles. Not all OnStar services are available everywhere or on all vehicles.

For more information, a full description of OnStar services, system limitations, and OnStar User Terms, Privacy Statement, and Software Terms:

- Call 1-888-4ONSTAR (1-888-466-7827).
- See www.onstar.com (U.S.).
- See www.onstar.ca (Canada).
- Call TTY 1-877-248-2080.
- Press ⓞⓝ to speak with an Advisor.

OnStar or connected services cannot work unless the vehicle is in a place where OnStar has an agreement with a wireless service provider for service in that area. The wireless service provider must also have coverage, network capacity, reception, and technology compatible with OnStar or connected services. Service involving location information about the vehicle cannot work unless GPS signals are available, unobstructed, and compatible with the OnStar hardware. OnStar or connected services may not work if the OnStar equipment is not properly installed or it has not been properly maintained. If equipment or software is added, connected, or modified, OnStar or connected services may not work. Other problems beyond the control of OnStar — such as hills, tall buildings, tunnels, weather, electrical system design and architecture of the vehicle, damage to the vehicle in a crash, or wireless phone network congestion or jamming — may prevent service.

See *Radio Frequency Statement* ⇨ *409*.

Services for People with Disabilities

Advisors provide services to help with physical disabilities and medical conditions.

Press ⓞⓝ to help:

- Locate a gas station with an attendant to pump gas.
- Find a hotel, restaurant, etc., that meets accessibility needs.
- Provide directions to the closest hospital or pharmacy in urgent situations.

TTY Users

OnStar has the ability to communicate to deaf, hard-of-hearing, or speech-impaired customers while in the vehicle. The available dealer-installed TTY system can provide in-vehicle access to all OnStar services, except Virtual Advisor and OnStar Turn-by-Turn Navigation.

If equipped, TTY mode can be turned on or off by touching Settings, then Apps, and then Phone. When TTY mode is on, phone calls can be made or received with OnStar using the infotainment display.

OnStar Personal Identification Number (PIN)

A PIN is needed to access some OnStar services. The PIN will need to be changed the first time when speaking with an Advisor. To change the OnStar PIN, contact an OnStar Advisor by pressing or calling 1-888-4ONSTAR.

Warranty

OnStar equipment may be warranted as part of the vehicle warranty.

Languages

The vehicle can be programmed to respond in multiple languages. Press and ask for an Advisor. Advisors are available in English, Spanish, and French. Available languages may vary by country.

Potential Issues

OnStar cannot perform Remote Door Unlock or Stolen Vehicle Assistance after the vehicle has been off continuously for 10 days without an ignition cycle. If the vehicle has not been started for 10 days, OnStar can contact Roadside Service or a locksmith to help gain access to the vehicle.

Global Positioning System (GPS)

- Obstruction of the GPS can occur in a large city with tall buildings; in parking garages; around airports; in tunnels and underpasses; or in an area with very dense trees. If GPS signals are not available, the OnStar system should still operate to call OnStar. However, OnStar could have difficulty identifying the exact location.
- In emergency situations, OnStar can use the last stored GPS location to send to emergency responders.

A temporary loss of GPS can cause loss of the ability to send a Turn-by-Turn Navigation route. The Advisor may give a verbal route or may ask for a call back after the vehicle is driven into an open area.

Cellular and GPS Antennas

Cellular reception is required for OnStar to send remote signals to the vehicle. Do not place items over or near the antenna to prevent blocking cellular and GPS signal reception.

Unable to Connect to OnStar Message

If there is limited cellular coverage or the cellular network has reached maximum capacity, this message may come on. Press to try the call again or try again after driving a few miles into another cellular area.

Vehicle and Power Issues

OnStar services require a vehicle electrical system, wireless service, and GPS satellite technologies to be available and operating for features to function properly. These systems may not operate if the battery is discharged or disconnected.

Add-on Electrical Equipment

The OnStar system is integrated into the electrical architecture of the vehicle. Do not add any electrical equipment. See *Add-On Electrical Equipment* ⇨ *303*. Added electrical equipment may interfere with the operation of the OnStar system and cause it to not operate.

Vehicle Software Updates

OnStar or GM may remotely deliver software updates or changes to the vehicle without further notice or consent. These updates or changes may enhance or maintain safety, security, or the operation of the vehicle or the vehicle systems. Software updates or changes may affect or erase data or settings that are stored in the vehicle, such as saved navigation destinations or pre-set radio stations. Neither OnStar nor GM is responsible for any affected or erased data or settings. These updates or changes may also collect personal information. Such collection is described in the OnStar privacy statement or separately disclosed at the time of installation. These updates or changes may also cause a system to automatically communicate with GM servers to collect information about vehicle system status, identify whether updates or changes are available, or deliver updates or changes. An active OnStar agreement constitutes consent to these software updates or changes and agreement that either OnStar or GM may remotely deliver them to the vehicle.

Privacy

The complete OnStar Privacy Statement may be found at www.onstar.com (U.S.), or www.onstar.ca (Canada). We recommend that you review it. If you have any questions, call 1-888-4ONSTAR (1-888-466-7827) or press On to speak with an Advisor.

Users of wireless communications are cautioned that the privacy of any information sent via wireless cellular communications cannot be assured. Third parties may unlawfully intercept or access transmissions and private communications without consent.

OnStar - Software Acknowledgements

To obtain the source code under GPL, LGPL, MPL, and other open source licenses, that is contained in this product, please visit http://opensource.lge.com. In addition to the source code, all referred license terms, warranty disclaimers, and copyright notices are available for download. This offer is valid for a period of three years after our last shipment of this product. This offer is valid to anyone in receipt of this information.

*Provided through LG Electronics Inc., who is solely responsible for provisions of related OSS compliance.

Connected Services

Connected Services

Navigation 418
Connections 419
Diagnostics 420

Connected Services

Navigation

Navigation requires a specific OnStar or connected service plan.

Press to receive Turn-by-Turn directions or have them sent to the vehicle's navigation screen, if equipped.

Turn-by-Turn Navigation

1. Press to connect to an Advisor.
2. Request directions to be downloaded to the vehicle.
3. Follow the voice-guided commands.

Using Voice Commands During a Planned Route

Functionality of the Voice Command button, if equipped, may vary by vehicle and region. For some vehicles, press to open the OnStar app on the infotainment display. For other vehicles press as follows.

Cancel Route

1. Press . System responds: "OnStar ready," then a tone.
2. Say "Cancel route." System responds: "Do you want to cancel directions?"
3. Say "Yes." System responds: "OK, request completed, thank you, goodbye."

Route Preview

1. Press . System responds: "OnStar ready," then a tone.
2. Say "Route preview." System responds with the next three maneuvers.

Repeat

1. Press . System responds: "OnStar ready," then a tone.
2. Say "Repeat." System responds with the last direction given, then responds with "OnStar ready," then a tone.

Get My Destination

1. Press . System responds: "OnStar ready," then a tone.

2. Say “Get my destination.” System responds with the address and distance to the destination, then responds with “OnStar ready,” then a tone.

Send Destination to Vehicle

Directions can be sent to the vehicle’s navigation screen, if equipped.

Press , then ask the Advisor to download directions to the vehicle’s navigation system, if equipped. After the call ends, the navigation screen will provide prompts to begin driving directions. Routes that are sent to the navigation screen can only be canceled through the navigation system.

See www.onstar.com (U.S.) or www.onstar.ca (Canada).

Connections

The following services help with staying connected.

For coverage maps, see www.onstar.com (U.S.) or www.onstar.ca (Canada).

Ensuring Security

- Change the default passwords for the Wi-Fi hotspot and myCadillac mobile app. Make these passwords different from each other and use a combination of letters and numbers to increase the security.
- Change the default name of the SSID (Service Set Identifier). This is your network’s name that is visible to other wireless devices. Choose a unique name and avoid family names or vehicle descriptions.

Wi-Fi Hotspot (If Equipped)

The vehicle may have a built-in Wi-Fi hotspot that provides access to the Internet and web content at 4G LTE speed. Up to seven mobile devices can be connected. A data plan is required. Use the in-vehicle controls only when it is safe to do so.

1. To retrieve Wi-Fi hotspot information, press to open the OnStar app on the infotainment display, then select Wi-Fi Hotspot. On some vehicles, touch Wi-Fi or Wi-Fi Settings on the screen.
2. The Wi-Fi settings will display the Wi-Fi hotspot name (SSID), password, and on some vehicles, the connection type (no Internet connection, 3G, 4G, 4G LTE), and signal quality (poor, good, excellent). The LTE icon shows connection to Wi-Fi. It is possible that the icon may not illuminate even though the vehicle has an active connection.
3. To change the SSID or password, press or call 1-888-4ONSTAR to connect with an Advisor. On some vehicles, the SSID and password can be changed in the Wi-Fi Hotspot menu.

After initial set-up, your vehicle’s Wi-Fi hotspot will connect automatically to your mobile devices. Manage data usage by turning Wi-Fi on or off on your mobile device, by using the myCadillac mobile app, or by contacting an OnStar Advisor. On some vehicles, Wi-Fi can also be managed from the Wi-Fi Hotspot menu.

MyCadillac Mobile App (If Available)

Download the myCadillac mobile app to compatible Apple and Android smartphones. Cadillac users can access the following services from a smartphone:

- Remotely start/stop the vehicle, if factory-equipped.
- Lock/unlock doors, if equipped with automatic locks.
- Activate the horn and lamps.
- Check the vehicle's fuel level, oil life, or tire pressure, if factory-equipped with the Tire Pressure Monitor System.
- Send destinations to the vehicle.
- Locate the vehicle on a map (U.S. market only).
- Turn the vehicle's Wi-Fi hotspot on/off, manage settings, and monitor data consumption, if equipped.
- Locate a dealer and schedule service.
- Request Roadside Service.
- Set a parking reminder with pin drop, take a photo, make a note, and set a timer.
- Connect with Cadillac on social media.

Features are subject to change. For myCadillac mobile app information and compatibility, see my.cadillac.com.

An active OnStar or connected service plan may be required. A compatible device, factory-installed remote start, and power locks are required. Data rates apply. See www.onstar.com for details and system limitations.

Remote Services

Contact an OnStar Advisor to unlock the doors or sound the horn and flash the lamps.

Marketplace

OnStar Advisors can provide offers from restaurants and retailers on your route, help locate hotels, or book a room. These services vary by market.

Diagnostics

By monitoring and reporting on the vehicle's key systems, OnStar Advanced Diagnostics, if equipped, provides a way to keep up on maintenance. Capabilities vary by model. See www.onstar.com for details and system limitations. Features are subject to change. For updates on feature capabilities, see my.cadillac.com. Message and data rates may apply.

Index

A

Accessories and Modifications 306
Accessory Power 223
Adaptive Cruise Control 251
Add-On Electrical Equipment 303
Additional Information
  OnStar 414
Additional Maintenance
  and Care 388
Adjustments
  Lumbar, Front Seats 32
  Thigh Support 33
Agreements
  Trademarks and License 187
Air Cleaner/Filter, Engine 316
Air Conditioning 196
Air Filter
  Life System 315
Air Filter, Passenger
  Compartment 201
Air Vents 200
Airbag System
  Check 58
  How Does an Airbag Restrain? 52
  Passenger Sensing System 53
  What Makes an Airbag
    Inflate? 52
Airbag System (cont'd)
  What Will You See after an
    Airbag Inflates? 52
  When Should an Airbag
    Inflate? 51
  Where Are the Airbags? 49
Airbags
  Adding Equipment to the
    Vehicle 58
  Passenger Status Indicator 96
  Readiness Light 96
  Servicing Airbag-Equipped
    Vehicles 57
  System Check 48
Alarm
  Vehicle Security 20
Alert
  Lane Change 289
  Rear Pedestrian 282
  Side Blind Zone (SBZA) 289
All-Season Tires 339
All-Wheel Drive 236, 327
AM-FM Radio 141
Antenna
  Multi-band 145
Antilock Brake System (ABS) 236
  Warning Light 100

Appearance Care
Exterior 370
Interior 375
Apple CarPlay and
Android Auto 174
Assistance Systems for Driving 283
Assistance Systems for Parking
and Backing 277
Audio
Bluetooth 148
Auto Stop
Stop/Start System 221
Automatic
Dimming Mirrors 25
Door Locks 17
Emergency Braking (AEB) 285
Headlamp System 128
Transmission 227, 229
Transmission Fluid 315
Vehicle Hold Light 101
Automatic Transmission
Manual Mode 234, 235
Automatic Vehicle Hold (AVH) 239
Avoiding Untrusted Media
Devices 145

B

Battery
Exterior Lighting Battery
Saver 133
Load Management 132
Power Protection 133
Battery - North America 326, 366
Blade Replacement, Wiper 327
Bluetooth
Overview 169, 170
Bluetooth Audio 148
Brake
Electric Boost 236
Parking, Electric 237
System Warning Light 99
Brake Pad Life System 324
Brakes 323
Antilock 236
Assist 238
Fluid 325
Pad Life System 324
Braking 204
Automatic Emergency (AEB) 285
Braking System
Front Pedestrian (FPB) 287
Break-In, New Vehicle 218
Buckle To Drive 41
Bulb Replacement
Front Turn Signal Lamps 330
Halogen Bulbs 330
Headlamp Aiming 329
Headlamps 329
High Intensity Discharge
(HID) Lighting 330
Buying New Tires 354

C

Calibration 84
California
Perchlorate Materials
Requirements 306
California Proposition
65 Warning 305, 326, 366,
Back Cover
Canadian Vehicle Owners 1
Capacities and Specifications 396
Carbon Monoxide
Engine Exhaust 226
Trunk 19
Winter Driving 213
Cargo
Management System 80
Tie-Downs 80
Caution, Danger, and Warning 2
Center Console Storage 79

Chains, Tire 358
Charging
  Wireless 85
Charging System Light 97
Check
  Engine Light (Malfunction
    Indicator) 97
Child Restraints
  Infants and Young Children 60
  Lower Anchors and Tethers
    for Children 65
  Older Children 59
  Securing 72, 74
  Systems 63
Circuit Breakers 331
Cleaning
  Exterior Care 370
  Interior Care 375
Climate Control Systems
  Dual Automatic 196
Clock 84
Cluster, Instrument 88, 90
Collision Damage Repair 406
Compartments
  Storage 78
Compass 84
Competitive Driving Mode 246
Composite Materials 218
Compressor Kit, Tire Sealant 360
Connected Services
  Connections 419
  Diagnostics 420
  Navigation 418
Connections
  Connected Services 419
Control
  Traction and Electronic
    Stability 239
Control of a Vehicle 204
Controls
  Steering Wheel 137
Convex Mirrors 23
Coolant
  Engine Temperature Gauge ... 94, 95
  Engine Temperature Warning
    Light 103
Cooling 196
Cooling System 317
Cornering Lamps 130
Courtesy Lamps 130
Courtesy Transportation
  Program 405
Coverage Explanations 163
Cruise Control 248
  Light 106
Cruise Control, Adaptive 251
Cruise Control, Super 260
Cupholders 78
Customer Assistance 402
  Offices 401
  Text Telephone (TTY) Users 402
Customer Information
  Publications Ordering
    Information 408
Customer Satisfaction
  Procedure 399
Cybersecurity 410

D

Damage Repair, Collision 406
Danger, Warning, and Caution 2
Data Collection
  Infotainment System 412
  OnStar 412
Data Recorders, Event 411
Database Coverage
  Explanations 163
Daytime Running Lamps (DRL) ... 128
Defensive Driving 204
Delayed Locking 17
Destination 155
Diagnostics
  Connected Services 420
Differential, Limited-Slip 248

Distracted Driving 203
Dome Lamps 130
Door
  Ajar Light 107
  Delayed Locking 17
  Locks 15
  Power Locks 17
Drive Belt Routing, Engine 398
Drive Systems
  All-Wheel Drive 236, 327
Driver
  Teen 184
Driver Assistance Systems 275
Driver Information
  Center (DIC) 107, 110
Driver Mode Control 241
Driver Mode Control Light 103
Driving
  Assistance Systems 283
  Better Fuel Economy 203
  Characteristics and
    Towing Tips 297
  Competitive 246
  Defensive 204
  Hill and Mountain Roads 212
  If the Vehicle is Stuck 214
  Impaired 204
  Loss of Control 206
Driving (cont'd)
  Off-Road Recovery 206
  Track Events and
    Competitive 207
  Vehicle Load Limits 214
  Wet Roads 211
  Winter 213
Dual Automatic Climate
  Control System 196

E

Electric Brake Boost 236
Electric Parking Brake 237
Electric Parking Brake Light 100
Electrical Equipment, Add-On 303
Electrical System
  Engine Compartment Fuse
    Block 332
  Fuses and Circuit Breakers 331
  Instrument Panel Fuse Block 334
  Overload 330
  Rear Compartment Fuse
    Block 337
Emergency
  OnStar 414
Engine
  Air Cleaner/Filter 316
Engine (cont'd)
  Check Light (Malfunction
    Indicator) 97
  Compartment Overview 309
  Coolant Temperature
    Gauge 94, 95
  Coolant Temperature
    Warning Light 103
  Cooling System 317
  Drive Belt Routing 398
  Exhaust 226
  Heater 222
  Oil Life System 314
  Oil Pressure Light 104
  Overheating 322
  Power Messages 117
  Running While Parked 227
  Starting 220
Engine Air Filter Life System 315
Entry Lighting 131
Equipment, Towing 302
Event Data Recorders 411
Exit Lighting 132
Extended Parking 226
Extender, Seat Belt 46
Exterior Lamp Controls 126
Exterior Lamps Off Reminder 128
Exterior Lighting Battery Saver 133

F

Filter,
  Engine Air Cleaner 316
Flash-to-Pass 128
Flashers, Hazard Warning 129
Flat Tire 359
Floor Mats 377
Fluid
  Automatic Transmission 315
  Brakes 325
  Washer 323
Folding Mirrors 24
Forward Collision Alert (FCA)
  System 283
Frequency Statement
  Radio 409
Front Pedestrian Braking (FPB)
  System 287
Front Seats
  Heated and Ventilated 37
Front Turn Signal Lamps 330
Fuel
  Additives 294
  Economy, Driving for Better 203
  Filling a Portable Fuel
    Container 296
  Filling the Tank 295
  Foreign Countries 294
Fuel (cont'd)
  Gauge 94
  Low Fuel Warning Light 105
  Prohibited Fuels 294
  Recommended 293, 294
  Top Tier 293
Fuses
  Engine Compartment Fuse
    Block 332
  Fuses and Circuit Breakers 331
  Instrument Panel Fuse Block 334
  Rear Compartment Fuse
    Block 337

G

Garage Door Opener 122
  Programming 122
Gas Strut(s) 328
Gauges
  Engine Coolant
    Temperature 94, 95
  Fuel 94
  Odometer 93
  Speedometer 93
  Tachometer 93
  Trip Odometer 93
  Warning Lights and Indicators ... 87
General Information
  Service and Maintenance 379
  Towing 297
  Vehicle Care 305
Global Positioning
  System (GPS) 161
Glove Box 78
GM Mobility Reimbursement
  Program 402
Guidance
  Problems with the Route 162

H

Halogen Bulbs 330
Hazard Warning Flashers 129
HD Radio Technology 143
Head Restraints 31
Head-up Display 112
Headlamps
  Aiming 329
  Automatic 128
  Bulb Replacement 329
  Daytime Running
    Lamps (DRL) 128
  Flash-to-Pass 128
  High Intensity Discharge
    (HID) Lighting 330
  High-Beam On Light 105

Headlamps (cont'd)
High/Low Beam Changer 128
Lamps On Reminder 106
Heated
Steering Wheel 82
Heated and Ventilated Front
Seats 37
Heated Mirrors 25
Heater
Engine 222
Heating 196
High-Beam On Light 105
High-Speed Operation 347
Hill and Mountain Roads 212
Hill Start Assist (HSA) 238
Hood 307
Horn 82
How to Wear Seat Belts Properly ... 42
HVAC 196

I

If the System Needs Service 163
Ignition Positions 219
Immobilizer 22
Indicator
Pedestrian Ahead 102
Vehicle Ahead 102
Infants and Young Children,
Restraints 60
Information
Publication Ordering 408
Infotainment System 412
Instrument Cluster 88, 90
Instrument Panel Overview 4
Interior Rearview Mirrors 26
Introduction 1, 134

J

Jump Starting - North America 366

K

Keyless Entry
Remote (RKE) System 7
Keys 6

L

Labeling, Tire Sidewall 342
Lamps
Cornering 130
Courtesy 130
Daytime Running (DRL) 128
Dome 130
Exterior Controls 126
Exterior Lamps Off Reminder 128
Exterior Lighting Battery
Saver 133
Lamps (cont'd)
Front Turn Signal 330
Malfunction Indicator (Check
Engine) 97
On Reminder 106
Reading 131
Lane Change Alert (LCA) 289
Lane Keep Assist (LKA) 291
Lane Keep Assist Light 101
Lap-Shoulder Belt 44
LATCH System
Replacing Parts after a Crash 72
LATCH, Lower Anchors and
Tethers for Children 65
LED Lighting 330
Light
Performance Shifting 101
Lighting
Entry 131
Exit 132
Illumination Control 130
LED 330
Lights
Airbag Readiness 96
Antilock Brake System (ABS)
Warning 100
Automatic Vehicle Hold 101
Brake System Warning 99

Lights (cont'd)
Charging System 97
Check Engine (Malfunction Indicator) 97
Cruise Control 106
Door Ajar 107
Driver Mode Control 103
Electric Parking Brake 100
Engine Coolant Temperature Warning 103
Engine Oil Pressure 104
Flash-to-Pass 128
High-Beam On 105
High/Low Beam Changer 128
Lane Keep Assist 101
Low Fuel Warning 105
Seat Belt Reminders 95
Security 105
Service Electric Parking Brake 100
StabiliTrak OFF 102
Tire Pressure 104
Traction Control System (TCS)/StabiliTrak 103
Traction Off 102
Limited-Slip Differential 248
Locks
Automatic Door 17
Delayed Locking 17
Door 15
Lockout Protection 18
Power Door 17
Safety 18
Loss of Control 206
Low Fuel Warning Light 105
Low-Profile Tires 341
Lower Anchors and Tethers for Children (LATCH System) 65
Lumbar Adjustment 32
Front Seats 32

M

Maintenance Records 394
Maintenance and Care Additional 388
Maintenance Schedule 380
Recommended Fluids and Lubricants 391
Malfunction Indicator Lamp 97
Manual Mode 234, 235
Map Data Updates 163
Maps 153
Massage 38
Media
Avoiding Untrusted Devices 145
Memory Seats 34
Messages
Engine Power 117
Vehicle 116
Vehicle Speed 117
Mirrors
Automatic Dimming 25
Automatic Dimming Rearview 26
Convex 23
Folding 24
Heated 25
Manual Rearview 26
Power 24
Tilt in Reverse 25
Mirrors, Interior Rearview 26
Mode 241
Driver Control 241
Monitor System, Tire Pressure 348
Multi-band Antenna 145

N

Navigation
Connected Services 418
Destination 155
Using the System 150
Navigation Symbols 154
New Vehicle Break-In 218

O

Odometer 93
Trip 93
Off-Road
Recovery 206
Oil
Engine 312
Engine Oil Life System 314
Pressure Light 104
Older Children, Restraints 59
Online Owner Center 402
OnStar 412
OnStar Additional Information 414
OnStar Emergency 414
OnStar Overview 413
OnStar Security 414
OnStar System 149, 160
Outlets
Power 85
Overheating, Engine 322
Overview 135
Instrument Panel 4

P

Park
Shifting Into 223, 224
Shifting Out of 225
Park Assist 277
Parking
Brake and P (Park)
Mechanism Check 327
Extended 226
Over Things That Burn 226
Parking or Backing
Assistance Systems 277
Passenger Airbag Status
Indicator 96
Passenger Compartment Air
Filter 201
Passenger Sensing System 53
Pedestrian Ahead Indicator 102
Perchlorate Materials
Requirements, California 306
Performance Shifting Light 101
Personalization
Vehicle 117
Phone
Apple CarPlay and
Android Auto 174
Bluetooth 169, 170
Port
USB 145
Positioning
Vehicle 162
Power
Door Locks 17
Mirrors 24
Outlets 85
Protection, Battery 133
Retained Accessory (RAP) 223
Seat Adjustment 32
Windows 26
Pregnancy, Using Seat Belts 46
Privacy
Vehicle Data Recording 410
Problems with Route Guidance 162
Program
Courtesy Transportation 405
Prohibited Fuels 294
Proposition
65 Warning,
California 305, 326, 366,
Back Cover

Publication Ordering
Information 408

R

Radio
HD Radio Technology 143
Radio Data System (RDS) 143
Radio Frequency Statement 409
Radio Reception 144
Radios
AM-FM Radio 141
Satellite 144
Reading Lamps 131
Rear Pedestrian Alert 282
Rear Seats 38
Rear Vision Camera (RVC) 277
Rearview Mirrors 26
Automatic Dimming 26
Reclining Seatbacks 33
Recognition
Voice 163
Recommended
Fuel 293, 294
Recommended Fluids and
Lubricants 391
Records
Maintenance 394
Recreational Vehicle Towing 370
Reimbursement Program, GM
Mobility 402
Remote Keyless Entry (RKE)
System 7
Remote Vehicle Start 13
Replacement Parts
Airbags 59
Maintenance 392
Replacing Airbag System 59
Replacing LATCH System Parts
after a Crash 72
Replacing Seat Belt System
Parts after a Crash 47
Reporting Safety Defects
Canadian Government 409
General Motors 410
U.S. Government 409
Restraints
Where to Put 64
Retained Accessory
Power (RAP) 223
Reverse Tilt Mirrors 25
Ride Control Systems
Enhanced Traction
System (ETS) 248
Roads
Driving, Wet 211
Roadside Service 403
Roof
Sunroof 28
Rotation, Tires 352
Routing, Engine Drive Belt 398
Run-Flat Tires 340
Running the Vehicle While
Parked 227

S

Safety Defects Reporting
Canadian Government 409
General Motors 410
U.S. Government 409
Safety Locks 18
Safety System Check 47
Satellite Radio 144
Scheduling Appointments 405
Sealant Kit, Tire 360
Seat Belts 40
Buckle To Drive 41
Care 47
Extender 46
How to Wear Seat Belts
Properly 42
Lap-Shoulder Belt 44
Reminders 95
Replacing after a Crash 47
Use During Pregnancy 46

Seats
Head Restraints 31
Heated and Ventilated Front 37
Lumbar Adjustment, Front 32
Memory 34
Power Adjustment, Front 32
Rear 38
Reclining Seatbacks 33
Securing Child Restraints 72, 74
Security
Light 105
OnStar 414
Vehicle 20
Vehicle Alarm 20
Self-Sealing Tires 341
Service 201
Accessories and Modifications 306
Doing Your Own Work 306
Maintenance Records 394
Maintenance, General Information 379
Parts Identification 395
Scheduling Appointments 405
Service Electric Parking Brake Light 100
Services
Special Application 388
Servicing System 163
Servicing the Airbag 57
Settings 176
Shifting
Into Park 223, 224
Out of Park 225
Side Blind Zone Alert (SBZA) 289
Signals, Turn and Lane-Change 129
Software Updates 140
Special Application Services 388
Specifications and Capacities 396
Speedometer 93
StabiliTrak
OFF Light 102
Start Assist, Hill 238
Start Vehicle, Remote 13
Starting the Engine 220
Steering 205
Heated Wheel 82
Wheel Adjustment 82
Wheel Controls 82
Steering Wheel Controls 137
Stop/Start System 221
Storage Areas
Cargo Management System 80
Center Console 79
Glove Box 78
Umbrella 79
Storage Compartments 78
Storing the Tire Sealant and Compressor Kit 366
Struts
Gas 328
Stuck Vehicle 214
Summer Tires 341
Sun Visors 28
Sunroof 28
Super Cruise 260
Symbols 2
Navigation 154
System
Brake Pad Life 324
Engine Air Filter Life 315
Forward Collision Alert (FCA) 283
Global Positioning 161
Infotainment 412
OnStar 160
Systems
Driver Assistance 275

T

Tachometer 93
Teen Driver 184
Text Telephone (TTY) Users 402
Theft-Deterrent Systems 23
Immobilizer 22

Thigh Support Adjustment 33
Time 84
Tires 339
All-Season 339
Buying New Tires 354
Chains 358
Designations 343
Different Size 356
If a Tire Goes Flat 359
Inspection 352
Low Profile 341
Pressure 346, 347
Pressure Light 104
Pressure Monitor Operation 349
Pressure Monitor System 348
Rotation 352
Run-Flat 340
Sealant and Compressor Kit 360
Sealant and Compressor Kit, Storing 366
Self-Sealing 341
Sidewall Labeling 342
Terminology and Definitions 344
Uniform Tire Quality Grading 356
Wheel Alignment and Tire Balance 357
Wheel Replacement 357
Tires (cont'd)
When It Is Time for New Tires 353
Winter 340
Top Tier Fuel 293
Towing
Driving Characteristics 297
Equipment 302
General Information 297
Recreational Vehicle 370
Trailer 300
Vehicle 369
Track Events and Competitive Driving 207
Traction
Control System (TCS)/StabiliTrak Light 103
Limited-Slip Differential 248
Off Light 102
Traction Control/Electronic Stability Control 239
Trademarks and License Agreements 187
Trailer
Towing 300
Transmission
Automatic 227, 229
Fluid, Automatic 315
Transportation Program, Courtesy 405
Trip Odometer 93
Trunk 19
Turn and Lane-Change Signals 129

U

Umbrella Storage 79
Uniform Tire Quality Grading 356
Universal Remote System 122
Operation 124
Programming 122
Updates
Map Data 163
Software 140
USB Port 145
Using the Navigation System 150
Using the System 137
Using This Manual 2

V

Vehicle
Alarm System 20
Automatic Hold Light 101
Canadian Owners 1
Control 204
Identification Number (VIN) 395
Load Limits 214
Messages 116
Personalization 117
Remote Start 13
Security 20
Speed Messages 117
Towing 369
Vehicle Ahead Indicator 102
Vehicle Care
Storing the Tire Sealant and Compressor Kit 366
Tire Pressure 346
Vehicle Data Recording and Privacy 410
Vehicle Hold
Automatic 239
Vehicle Hold (AVH)
Automatic 239
Vehicle Positioning 162
Ventilation, Air 200
Visors 28
Voice Recognition 163

W

Warning
Brake System Light 99
Caution and Danger 2
Warning Lights, Gauges, and Indicators 87
Warnings
Hazard Flashers 129
Washer Fluid 323
Wheels
Alignment and Tire Balance 357
Different Size 356
Replacement 357
When It Is Time for New Tires 353
Where to Put the Restraint 64
Windows 26
Power 26
Windshield
Replacement 328
Wiper/Washer 82
Winter
Driving 213
Winter Tires 340
Wiper Blade Replacement 327
Wireless Charging 85

WARNING

Operating, servicing and maintaining a passenger vehicle or off-highway motor vehicle can expose you to chemicals including engine exhaust, carbon monoxide, phthalates, and lead, which are known to the State of California to cause cancer and birth defects or other reproductive harm. To minimize exposure, avoid breathing exhaust, do not idle engine except as necessary, service your vehicle in a well-ventilated area and wear gloves or wash your hands frequently when servicing your vehicle. For more information go to www.P65Warnings.ca.gov/passenger-vehicle.

United States

Customer Assistance:
1-800-458-8006

Roadside Assistance:
1-800-224-1400

Canada

Customer Assistance:
1-888-446-2000

Roadside Assistance:
1-800-882-1112

US

My Cadillac App

Download the my.Cadillac App for full manuals and "how to" videos. The full owner's manual is located with your vehicle infotainment system, if equipped.

Canada

Connected Services and OnStar:
1-888-4-ONSTAR

84432194 B

US ONLY

MyCertifiedService.com

Visit MyCertifiedService.com to easily locate your nearest dealer and schedule your next service appointment online.