2007-08 TRANSMISSION

Automatic Transmission - Repair Instructions - X5

00 TRANSMISSION ASSEMBLY

00 DANGER OF POISONING IF OIL IS INGESTED/ABSORBED THROUGH THE SKIN

Danger of poisoning!

Ingesting oil or absorbing through the skin may cause poisoning!

Possible symptoms are:

- Headaches
- Dizziness
- Stomach aches
- Vomiting
- Diarrhoea
- Cramps/fits
- Unconsciousness

Protective measures/rules of conduct:

- Pour oil only into appropriately marked containers
- Do not pour oil into drinking vessels (drinks bottles, glasses, cups or mugs)
- Observe country-specific safety regulations

First aid measures:

- Do not induce vomiting.

  If the person affected is still conscious, he/she must rinse out their mouth with water, drink plenty of water and consult a doctor immediately.

  If the person affected is unconscious, do not administer anything by mouth, place the person in the recovery position and seek immediate medical attention.

00 RISK OF INJURY IF OIL COMES INTO CONTACT WITH EYES AND SKIN

Danger of injury!

Contact with eyes or skin may result in injury!

cardiagn.com

Possible symptoms are:

- Impaired sight
- Irritation of the eyes
- Reddening of the skin
- Rough and cracked skin

Protective measures/rules of conduct:

- Wear protective goggles
- Wear oil-resistant protective gloves
- Observe country-specific safety regulations

First aid measures:

- Eye contact: Rinse eyes immediately with plenty of water for at least 15 minutes; if available, use an eye-rinsing bottle. If irritation of the eyes persists, consult a doctor.
- Skin contact: Wash off with soap and water immediately. If irritation persists, consult a doctor.

NOTE: Do not use solvents/thinners.

00 SAFETY INSTRUCTIONS FOR HANDLING OIL

WARNING: Danger of poisoning if oil is ingested/absorbed through the skin! See 00 DANGER OF POISONING IF OIL IS INGESTED/ABSORBED THROUGH THE SKIN.
Risk of injury if oil comes into contact with eyes and skin! See 00 RISK OF INJURY IF OIL COMES INTO CONTACT WITH EYES AND SKIN.

Recycling:

Observe country-specific waste-disposal regulations.

Measures if oil is unintentionally released:

- Personal precautionary measures: Danger of slipping! Keep non-involved persons away from the work area. Wear personal protective clothing/equipment.
- Environmental protection measures: Prevent oil from draining into drain channels, sewerage systems, pits, cellars, water and the ground.
- Limiting spread: Use oil blocks to prevent the surface spread of oil.
- Cleaning procedure: Bind and dispose of escaped oil with nonflammable absorbents.

NOTE: Do not flush oil away with water or aqueous cleaning agents.

cardiagn.com

00 11 500 CHECKING/TOPPING UP FLUID LEVEL IN AUTOMATIC TRANSMISSION (GA6HP26Z)

IMPORTANT: Use only the approved transmission fluid. See AUTOMATIC TRANSMISSION - OPERATING FLUIDS .
Failure to comply with this requirement will result in serious damage to the automatic transmission!

Installation:

Tighten down filler plug using

1. Hexagon wrench 8 A/F
2. torque wrench
3. Socket 8 A/F

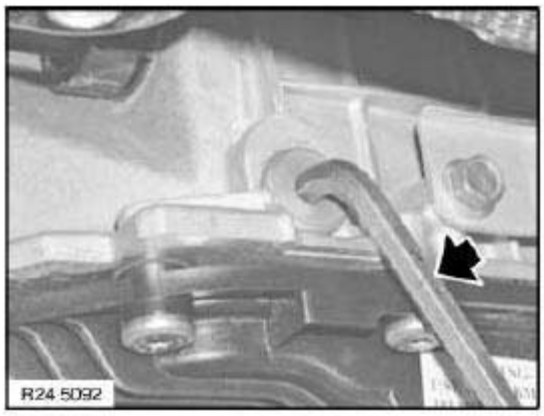

Fig. 1: Hexagon Wrench 8 A/F
Courtesy of BMW OF NORTH AMERICA, INC.

Topping up transmission fluid after a repair:

Stand vehicle on a level surface and secure against rolling off.

Undo filler plug (1).

Installation:

Replace sealing ring.

Top up transmission fluid until it emerges from filling orifice.

Start engine.

cardiagn.com

Replenish transmission fluid until it emerges from filling orifice.

Screw in filler plug (1).

Tightening torque. See **AUTOMATIC TRANSMISSION - TIGHTENING TORQUES** .

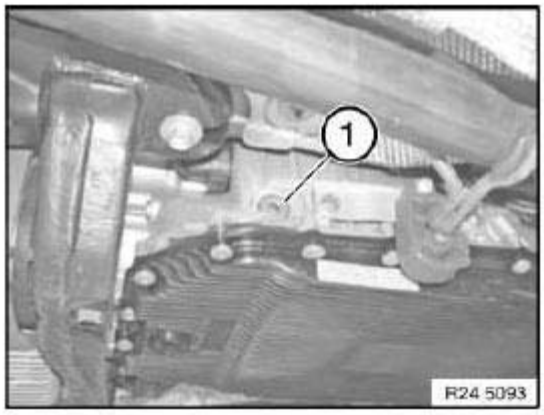

Fig. 2: Identifying Filler Plug
Courtesy of BMW OF NORTH AMERICA, INC.

Press brake pedal to floor and shift through all gears several times at idle speed. Then shift to "P" position (Park).

Then check fluid level.

Checking fluid level:

- Call up Service functions (Drive) in BMW diagnosis system
- Carry out fluid level check in accordance with instructions

23 TRANSMISSION DESIGNATIONS

Breakdown of BMW designation:

BREAKDOWN OF BMW DESIGNATION

A5S 300J (old designation)		
A	Transmission type	○ S = Manual transmission ○ A = Automatic transmission
5	Number of forward gears	
S	Type of top gear	○ D = Direct gear ○ S = Overdrive gear
300	Max. input torque (Nm)	
		○ G = Getrag

cardiagn.com

J	Code letter of transmission manufacturer	○ J = Jatco ○ R = GMPT (General Motors Powertrain) ○ Z = ZF (Zahnradfabrik Friedrichshafen)
SMG	Notes	SMG = Sequential M gearbox/transmission
GS6-37BZ (new designation according to BMW Group Standard GS 90007)		
G	Transmission	
S	Transmission type	○ S = Manual transmission ○ A = Automatic transmission
6	Number of forward gears	
-		○ = Standard with manual gearshift ○ HP = Hydraulic planetary gear
37	Transmission type	○ 26 = D-transmission ○ 31 = C-transmission ○ 39 = F-transmission ○ 37 = H-transmission ○ 53 = G-transmission ○ 17 = I-transmission ○ 47 = J-transmission
B	Gear set	○ B = Petrol/gasoline gear ratio ○ D = Diesel gear ratio
Z	Code letter of transmission manufacturer	○ G = Getrag ○ Z = ZF (Zahnradfabrik Friedrichshafen)

Manual transmission:

BREAKDOWN OF BMW DESIGNATION (MANUAL TRANSMISSION)

BMW designation	Manufacturer	Manufacturer designation	Remark
S5D 200G	Getrag	B transmission (220/5)	
S5D 200G	Getrag	B transmission (221/5)	for M41 engine only
S5D 250G	Getrag	B transmission (220/5)	Reinforced design
S5D 260Z	ZF	C-transmission (S5-31 D)	for M51 engine only
S5D 280Z	ZF	C-transmission (S5-31)	
S5D 310Z	ZF	C-transmission (S5-31)	up to 9.95
S5D 320Z	ZF	C-transmission (S5-31)	from 9.95 (reinforced design)
GS5S31BZ (SMG)	ZF	C transmission	SMG
GS5-39DZ	ZF	F transmission	
S6S 420G	Getrag	D-transmission (226/6)	
S6S 420G (SMG)	Getrag	D transmission	SMG

cardiagn.com

S6S 560G	Getrag	E-transmission (286/6)	
GS6-37BZ	ZF	H-transmission	
GS6S37BZ (SMG)	ZF	H-transmission	
GS6-37DZ	ZF	H-transmission	
GS6-37BG	Getrag	H-transmission	
GS6-53BZ	ZF	G-transmission	
GS6-53DZ	ZF	G-transmission	
GS6-17BG	Getrag	I-transmission	
GS7S47BG (SMG)	Getrag	J-transmission (247)	SMG 7-speed

Automatic transmission:

BREAKDOWN OF BMW DESIGNATION (AUTOMATIC TRANSMISSION)

BMW designation	Manufacturer	Manufacturer designation	Remark
A4S 200R	GMPT	GM4	
A4S 270R	GMPT	THM-R1w	Transmission widestepped
A4S 310R	GMPT	THM-R1	
A5S 300J	Jatco	Jatco	
A5S 310Z	ZF	5HP-18	
A5S 325Z	ZF	5HP-19	
A5S 440Z	ZF	5HP-24	
A5S 560Z	ZF	5HP-30	
A5S 360R / 390R	GM	GM5	
GA6HP19Z	ZF	6HP19	
GA6HP26Z	ZF	6HP26	
GA6HP32Z	ZF	6HP32	
GA6L45R	GM	GM6	

23 .. UNIVERSAL TRANSMISSION BRACKET

Special tools required:

- 00 2 030
- 23 0 132
- 23 4 050

NOTE:

- **The universal transmission bracket is introduced for the E60 AWD**
- **Suitable for manual and automatic transmissions**

IMPORTANT: Front and rear supports (1) can be laterally adjusted by means of screws (2). Carrier (3) of rear supports (1) can be longitudinally adjusted by means of

cardiagn.com

screw.
Supports must be adapted in length and width to the transmission.

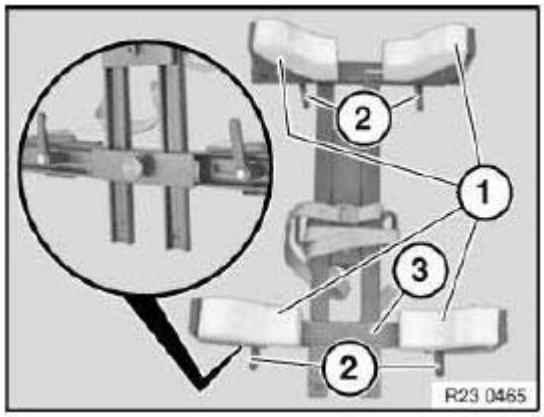

Fig. 3: Identifying Front And Rear Supports Of Screws
Courtesy of BMW OF NORTH AMERICA, INC.

Supporting transmission:

Support transmission with special tools 23 4 050, 23 0 132, 00 2 030.

IMPORTANT: Transmission must be secured with tensioning strap (1).

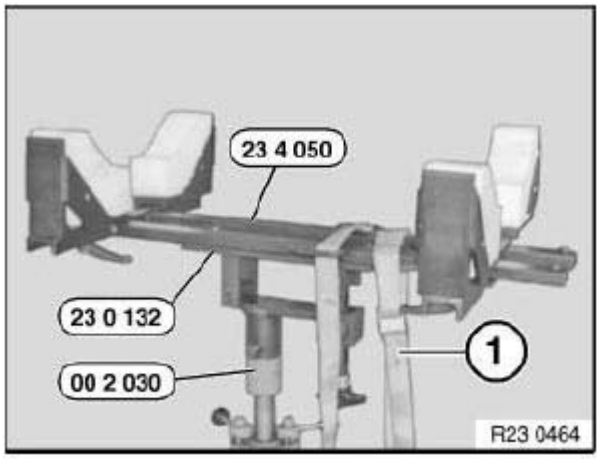

Fig. 4: Identifying Tensioning Strap And Special Tools (23 4 050, 23 0 132, 00 2 030)
Courtesy of BMW OF NORTH AMERICA, INC.

23 .. ... UNIVERSAL TRANSMISSION RETAINING BRIDGE

Special tools required:

- 00 1 450

cardiagn.com

- 24 0 200

NOTE:

- **The transmission retaining bridge 24 0 200 is suitable for both manual and automatic transmissions**

IMPORTANT: Adapters and spindles must be adapted for positive locking to the transmission.
(Risk of injury)

Adapt adapters (1) and spindle with thrust piece (3) to transmission.

Adapt length with slide (2).

Screw in spindle (4).

IMPORTANT: Before mounting on assembly stand 00 1 450, check retaining bridge for secure seating.

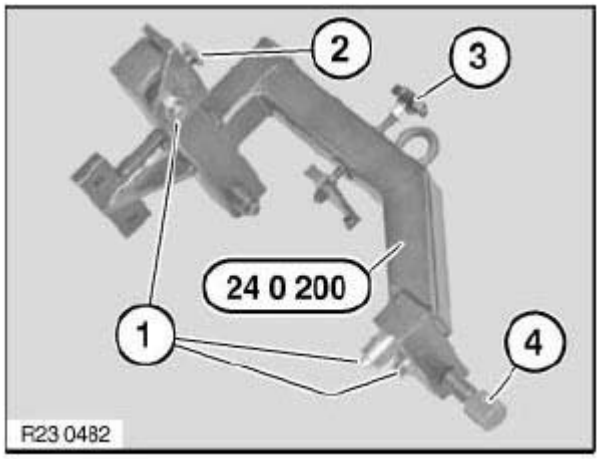

Fig. 5: Identifying Adapters, Thrust Piece And Spindle
Courtesy of BMW OF NORTH AMERICA, INC.

24 00 023 REMOVING AND INSTALLING AUTOMATIC TRANSMISSION (GA6HP26Z) N62TU

Special tools required:

- 00 2 030
- 23 0 132
- 23 4 050
- 24 1 110
- 24 2 390

cardiagn.com

- 24 4 160
- 23 4 161
- 24 4 165

IMPORTANT: After completion of work, check transmission oil level. See 00 11 500 CHECKING/TOPPING UP FLUID LEVEL IN AUTOMATIC TRANSMISSION (GA6HP26Z) .
Use only the approved transmission fluid. See AUTOMATIC TRANSMISSION - OPERATING FLUIDS .
Failure to comply with this requirement will result in serious damage to the automatic transmission!

WARNING: ***Danger to life!***
Mount securing fixture for vehicle on lifting platform to prevent the vehicle from slipping off or tilting down. See 51 71 505 MOUNT SECURING FIXTURE FOR VEHICLE ON LIFTING PLATFORM .

Necessary preliminary tasks:

- Disconnect battery . See **12 00... INSTRUCTIONS FOR DISCONNECTING AND CONNECTING BATTERY** .
- If necessary, remove fan cowl . See **17 11 035 REMOVING AND INSTALLING/REPLACING FAN COWL WITH ELECTRIC FAN (N52K)** .
- Remove underbody protection . See **51 47 491 REMOVING AND INSTALLING/REPLACING REAR UNDERBODY PROTECTION** .
- Remove reinforcement plate . See **31 10 010 REMOVING AND INSTALLING/REPLACING REINFORCEMENT PLATE** .

  Important notes on installation are described in this work step.

- Remove exhaust system . See **18 00 020 REMOVING AND INSTALLING COMPLETE EXHAUST SYSTEM (N52K)** .
- Remove heat shields
- Remove propeller shaft from front differential . See **26 11 000 REMOVING AND INSTALLING PROPELLER SHAFT (INSERTED) COMPLETELY** .
- Remove propeller shaft
- Support engine with lifter when removing transmission

Unfasten nut.

Disconnect cable (1).

Installation:

cardiagn.com

- Unfasten nut.
- Adjust cable by means of holder (2) until spacing A = 1 mm is obtained
- Tighten nut.

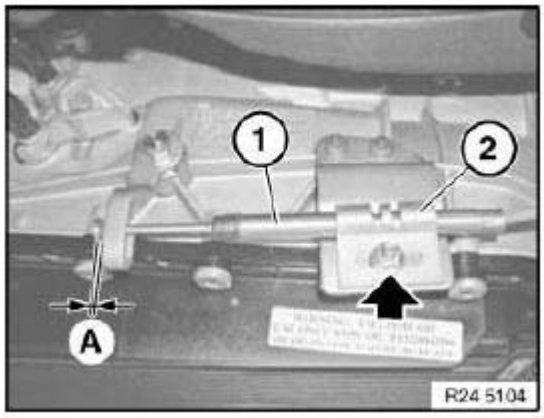

Fig. 6: Identifying Cable And Holder
Courtesy of BMW OF NORTH AMERICA, INC.

Unfasten screws (1 and 2).

Tightening torque. See **AUTOMATIC TRANSMISSION - TIGHTENING TORQUES** .

Release lines (3) from retaining clips.

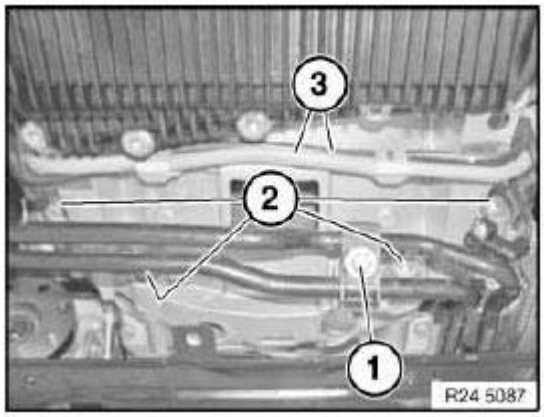

Fig. 7: Identifying Screws, Lines And Retaining Clips
Courtesy of BMW OF NORTH AMERICA, INC.

Release screw (1).

Detach oil line (2) from front axle.

cardiagn.com

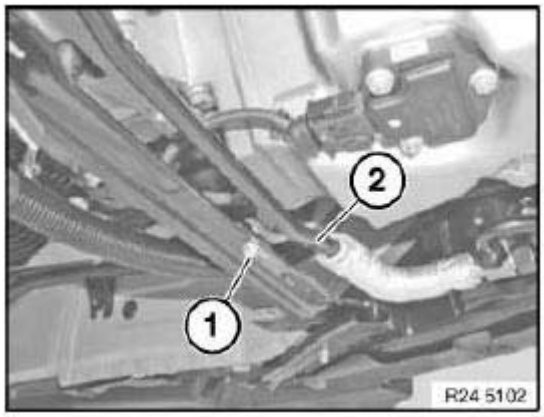

Fig. 8: Identifying Screw And Oil Line
Courtesy of BMW OF NORTH AMERICA, INC.

Release screw (1).

Disconnect hydraulic lines (2) to transmission fluid cooler.

Installation:

Replace sealing rings.

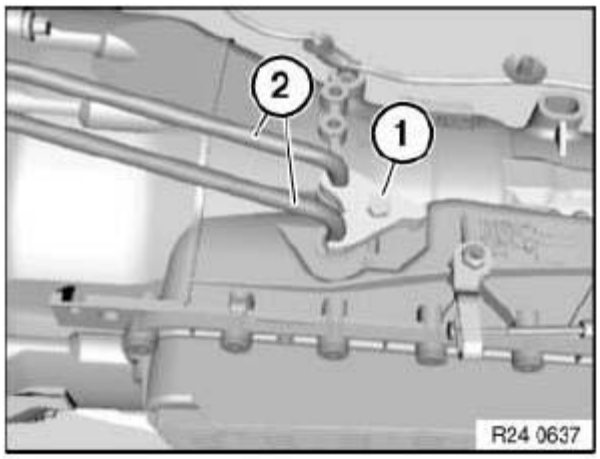

Fig. 9: Identifying Screw And Hydraulic Lines
Courtesy of BMW OF NORTH AMERICA, INC.

- Unlock plug (1) by turning and disconnect
- Release cable from retainers
- Insert special tool 24 2 390 in sealing sleeve

These tasks are described in **NOTES ON MECHATRONICS**.

cardiagn.com

(Important: Observe important note)

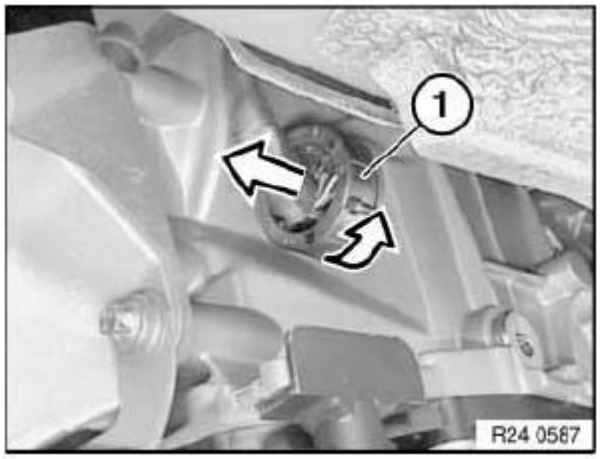

Fig. 10: Identifying Plug
Courtesy of BMW OF NORTH AMERICA, INC.

Release screw (1) and remove crankshaft sensor.

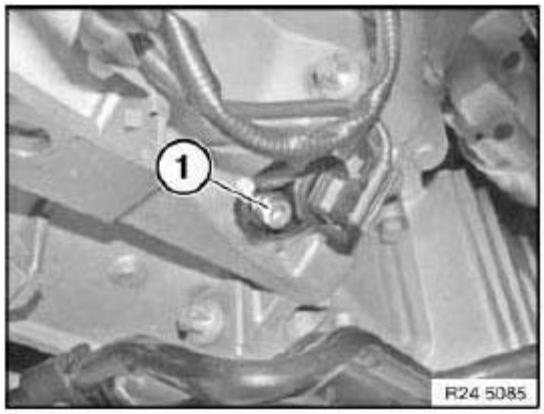

Fig. 11: Identifying Screw And Crankshaft Sensor
Courtesy of BMW OF NORTH AMERICA, INC.

Release cable box (1) from holder (2).

cardiagn.com

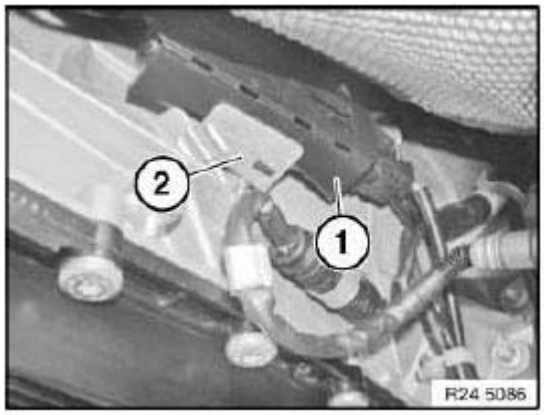

Fig. 12: Identifying Cable Box And Holder
Courtesy of BMW OF NORTH AMERICA, INC.

Release connector (1) from holder and disconnect.

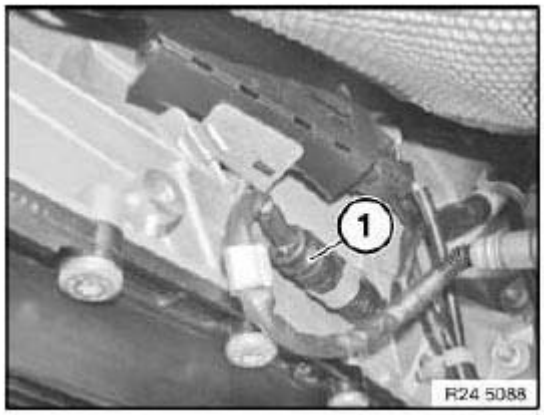

Fig. 13: Identifying Connector And Holder
Courtesy of BMW OF NORTH AMERICA, INC.

Supporting transmission:

Support with special tools 23 4 050, 23 0 132 and 00 2 030.

Secure transmission with tensioning strap (1).

Tasks are described in **TRANSMISSION BRACKET**.

cardiagn.com

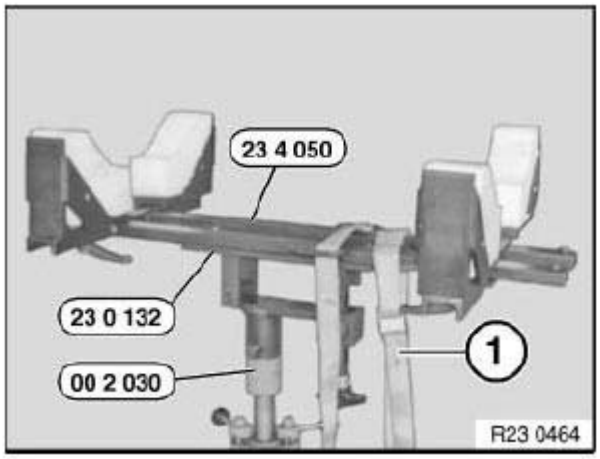

Fig. 14: Identifying Tensioning Strap And Special Tools (23 4 050, 23 0 132, 00 2 030)
Courtesy of BMW OF NORTH AMERICA, INC.

Unlock and detach plugs (1) and (2).

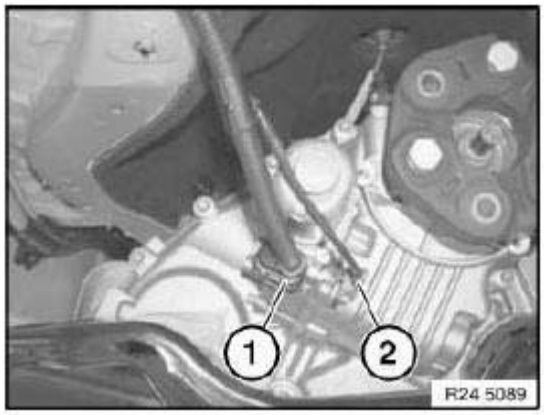

Fig. 15: Identifying Plugs
Courtesy of BMW OF NORTH AMERICA, INC.

Crank engine at vibration damper in direction of rotation until screw is visible in opening.

Release all screws of torque converter with special tool 24 1 110.

Crank engine further and release remaining 3 bolts.

Tightening torque. See **AUTOMATIC TRANSMISSION - TIGHTENING TORQUES** .

cardiagn.com

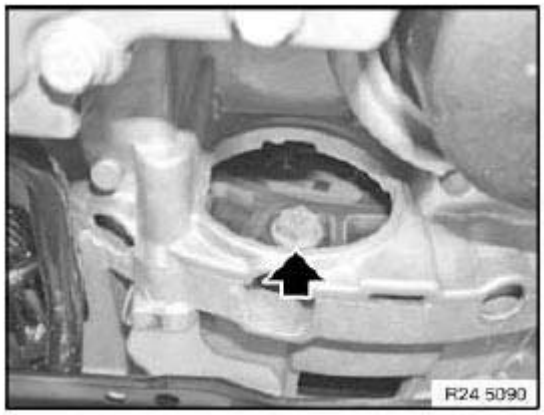

Fig. 16: Identifying Screws
Courtesy of BMW OF NORTH AMERICA, INC.

Prepare special tool (1) 24 4 161 (A) with shaped section (2) 24 4 165 side (A) to (A).

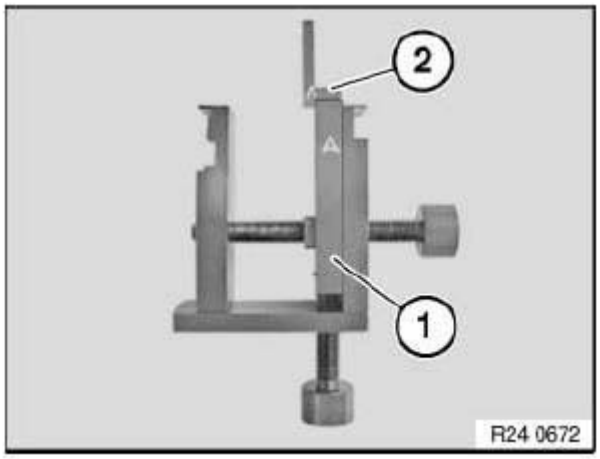

Fig. 17: Identifying Special Tool (24 4 161)
Courtesy of BMW OF NORTH AMERICA, INC.

Insert special tool 24 4 160 into opening of transmission housing and tensions slightly with screw (1).

Raise by turning screw (2) and clamp down.

Then tighten down screw (1).

cardiagn.com

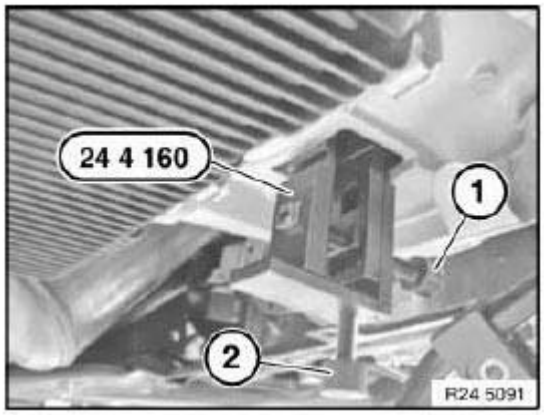

Fig. 18: Identifying Special Tool (24 4 160)
Courtesy of BMW OF NORTH AMERICA, INC.

Release screws.

Tightening torque. See **AUTOMATIC TRANSMISSION - TIGHTENING TORQUES** .

Unflange transmission.

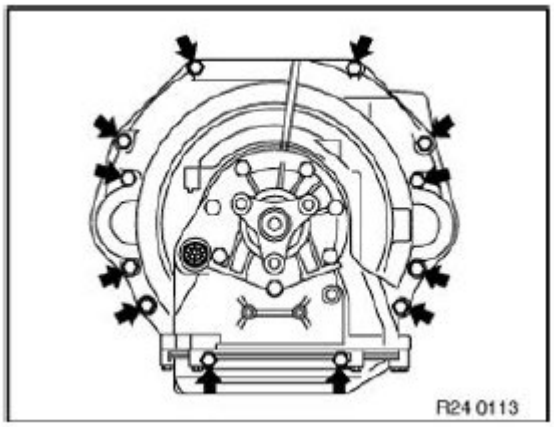

Fig. 19: Locating Screws
Courtesy of BMW OF NORTH AMERICA, INC.

Installation:

Bore (1) in driving disk must be accessible from opening on engine oil pan.

cardiagn.com

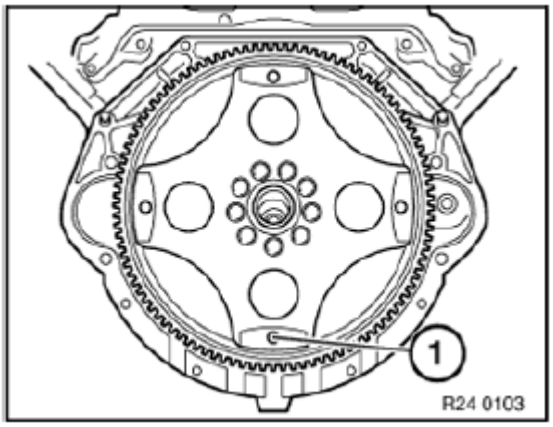

Fig. 20: Identifying Bore
Courtesy of BMW OF NORTH AMERICA, INC.

Check that dowel sleeves are correctly seated.

Replace damaged dowel sleeves.

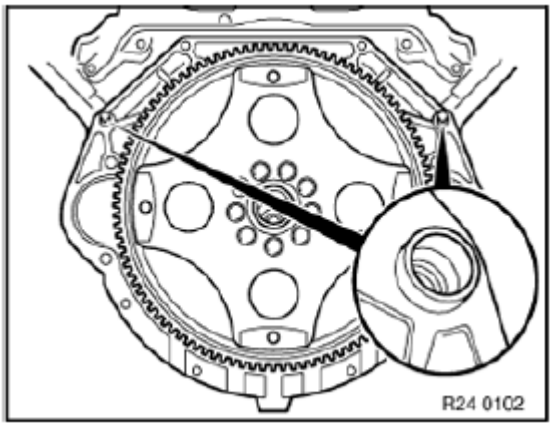

Fig. 21: Identifying Dowel Sleeves
Courtesy of BMW OF NORTH AMERICA, INC.

Installation:

Rotate torque converter until bore in torque converter is flush with bore in driving disk.

Flange automatic transmission to engine.

24 00 043 INSTALLING REPLACEMENT TRANSMISSION (GA6HP26Z)

Drain automatic transmission fluid at oil drain plug.

Tightening torque. See **AUTOMATIC TRANSMISSION - TIGHTENING TORQUES** .

cardiagn.com

IMPORTANT: After completion of work, program transmission control unit.

Recycling:

Catch and dispose of escaping transmission fluid.

Observe country-specific waste-disposal regulations.

IMPORTANT:

- **Before installing replacement transmission, always flush transmission fluid cooler together with lines. See 17 21 500 FLUSHING OIL COOLER WITH LINES (AUTOMATIC TRANSMISSION) .**
- **After completion of work, check transmission fluid level. See 00 11 500 CHECKING/TOPPING UP FLUID LEVEL IN AUTOMATIC TRANSMISSION (GA6HP26Z) .**
- **Use only the approved transmission fluid. See AUTOMATIC TRANSMISSION - OPERATING FLUIDS .**

Failure to comply with this requirement will result in serious damage to the automatic transmission!
Replacement transmission is supplied filled with transmission fluid.

Necessary preliminary tasks:

- Remove automatic transmission. See **24 00 023 REMOVING AND INSTALLING AUTOMATIC TRANSMISSION (GA6HP26Z) N62TU**.

Convert selector lever (1).

Tightening torque. See **AUTOMATIC TRANSMISSION - TIGHTENING TORQUES** .

Convert holder (2) for cable.

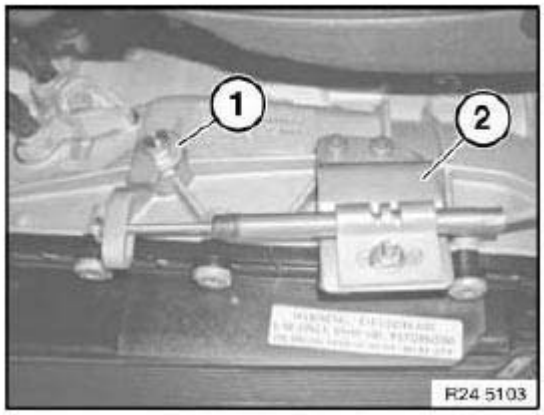

cardiagn.com

Fig. 22: Identifying Convert Selector Lever
Courtesy of BMW OF NORTH AMERICA, INC.

Convert transportation lock (1).

Convert all cable holders.

Convert all seal plugs.

Convert protective cap on output shaft.

IMPORTANT: After removing transportation lock, secure torque converter against slipping out.

Transmission identification:

- refer to BMW Parts Service
- on type plate

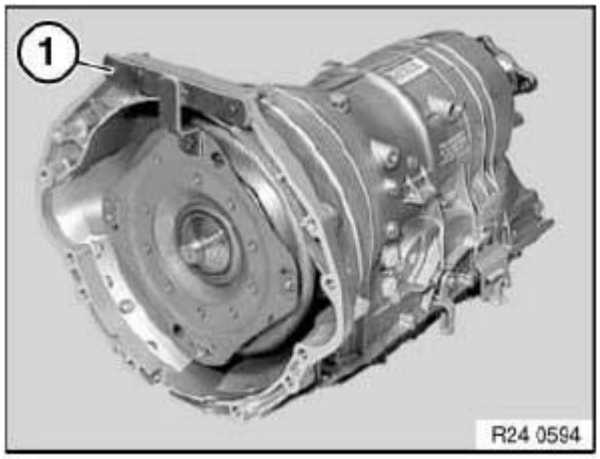

Fig. 23: Identifying Convert Transportation Lock
Courtesy of BMW OF NORTH AMERICA, INC.

11 TRANSMISSION CASE, OIL

24 11 010 REMOVING AND INSTALLING/SEALING OR REPLACING TRANSMISSION SUMP (GA6HP26Z)

IMPORTANT: Remove transmission sump only after it has cooled down.
After completion of work, check transmission oil level. See 00 11 500 CHECKING/TOPPING UP FLUID LEVEL IN AUTOMATIC TRANSMISSION (GA6HP26Z) .
Use only the approved gear oil. See AUTOMATIC TRANSMISSION -

cardiagn.com

OPERATING FLUIDS .
Failure to comply with this requirement will result in serious damage to the automatic transmission!

Necessary preliminary tasks:

- Remove assembly underside protection . See **51 47 491 REMOVING AND INSTALLING/REPLACING REAR UNDERBODY PROTECTION** .
- Remove heat shields

Remove oil drain plug (1).

Tightening torque. See **AUTOMATIC TRANSMISSION - TIGHTENING TORQUES** .

Drain automatic transmission fluid.

Installation:

Replace oil drain plug.

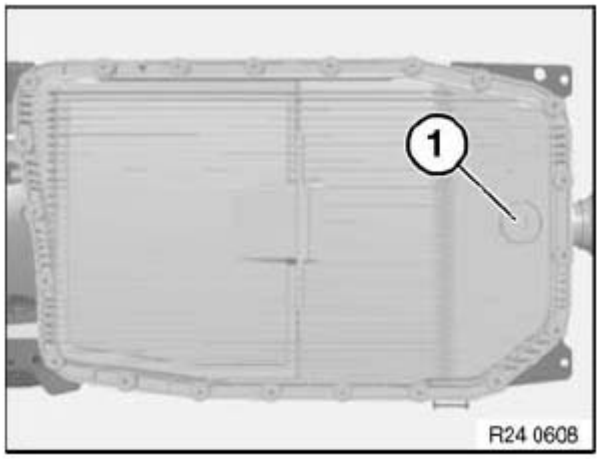

Fig. 24: Identifying Oil Drain Plug
Courtesy of BMW OF NORTH AMERICA, INC.

Recycling:

Catch and dispose of escaping transmission fluid.

Observe country-specific waste-disposal regulations.

Unscrew all bolts.

Remove transmission sump (1).

cardiagn.com

Installation:

Insert screws (2) until screw heads make contact.

Insert all further screws in diagonal sequence from inside to outside until screw heads make contact.

Tightening torque. See **AUTOMATIC TRANSMISSION - TIGHTENING TORQUES** .

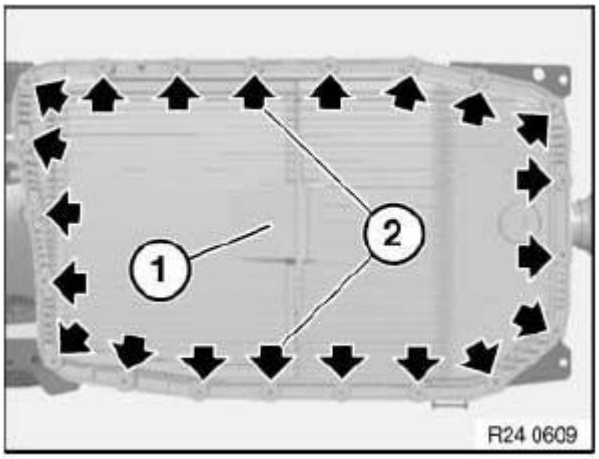

Fig. 25: Locating Transmission Sump Screws
Courtesy of BMW OF NORTH AMERICA, INC.

Remove gasket (1) from transmission sump.

Clean transmission oil sump to remove residual oil.

Clean sealing faces and groove with a cloth.

Insert new gasket in transmission sump groove.

IMPORTANT: Do not degrease transmission sump with cleaning agent.

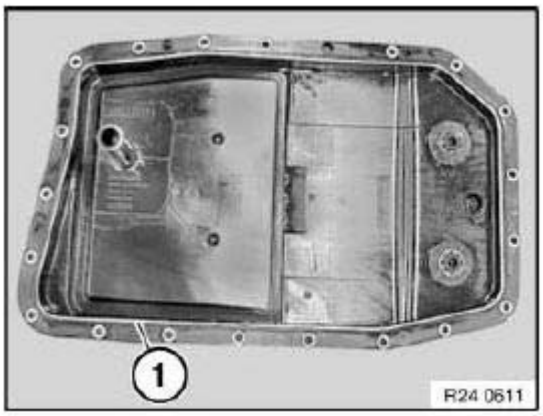

cardiagn.com

Fig. 26: Identifying Gasket
Courtesy of BMW OF NORTH AMERICA, INC.

Replace sealing ring (1) on oil filter tube.

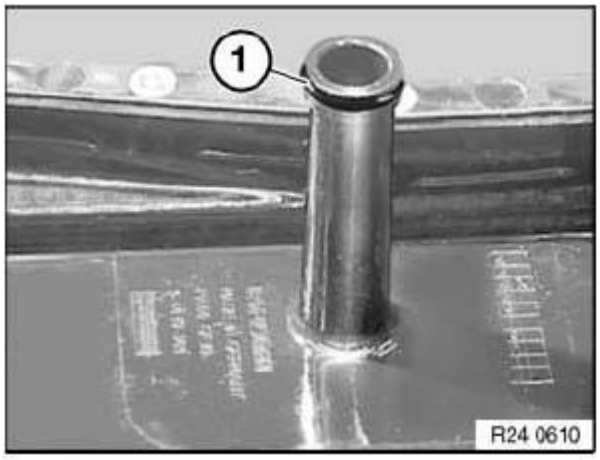

Fig. 27: Identifying Sealing Ring On Oil Filter Tube
Courtesy of BMW OF NORTH AMERICA, INC.

Installation:

The gasket is correctly installed when it is engaged in the locating opening of the transmission sump.

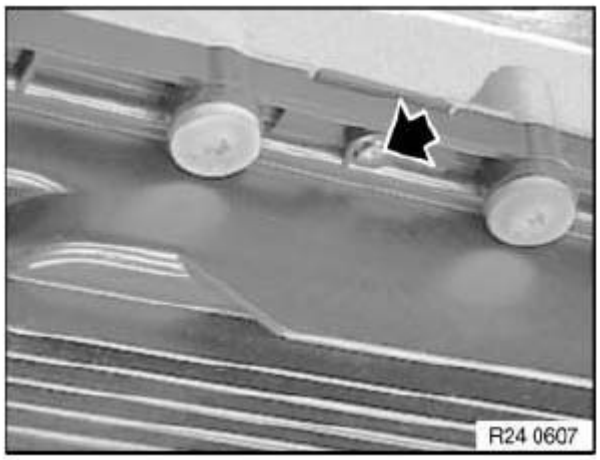

Fig. 28: Locating Opening Of Transmission Sump
Courtesy of BMW OF NORTH AMERICA, INC.

12 TORQUE CONVERTER BEARING

24 31 010 REPLACING TORQUE CONVERTER SHAFT SEAL (GA6HP26Z)

cardiagn.com

Special tools required:

- 00 1 450
- 24 0 200
- 24 2 351
- 24 2 352
- 24 2 353
- 24 2 360

Necessary preliminary tasks:

- Remove automatic transmission. See **24 00 023 REMOVING AND INSTALLING AUTOMATIC TRANSMISSION (GA6HP26Z) N62TU**.

IMPORTANT: After completion of work, check transmission oil level. See 00 11 500 CHECKING/TOPPING UP FLUID LEVEL IN AUTOMATIC TRANSMISSION (GA6HP26Z) .
Use only approved transmission oil. See AUTOMATIC TRANSMISSION - OPERATING FLUIDS .
Failure to comply with this instruction will result in serious damage to the transmission.

Secure transmission with special tool 24 0 200 to assembly stand 00 1 450.

Remove torque converter. See **24 40 010 REMOVING AND INSTALLING/REPLACING TORQUE CONVERTER (GA6HP26Z)**.

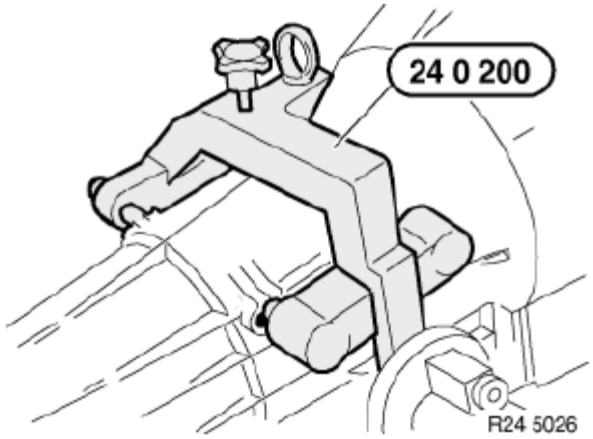

Fig. 29: Identifying Special Tool (24 0 200)
Courtesy of BMW OF NORTH AMERICA, INC.

Attach special tool 24 2 353 to drive shaft (1).

cardiagn.com

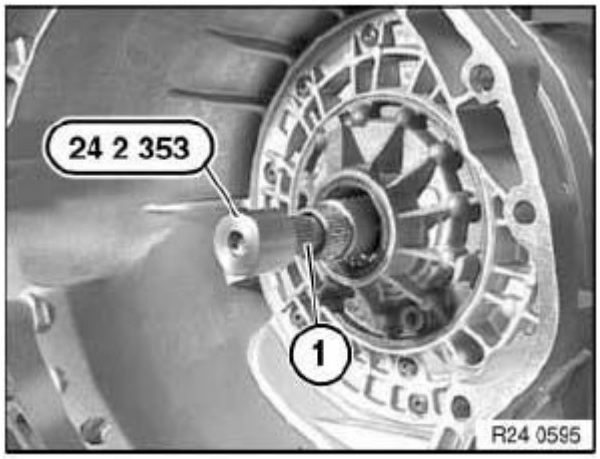

Fig. 30: Identifying Special Tool (24 2 353)
Courtesy of BMW OF NORTH AMERICA, INC.

Screw in special tool 24 2 351 until it is firmly connected with shaft seal.

Screw in special tool 24 2 352 to remove shaft seal.

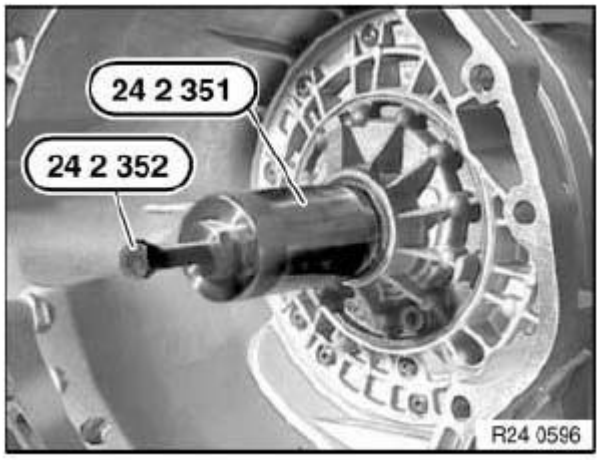

Fig. 31: Identifying Special Tool (24 2 351) And (24 2 352)
Courtesy of BMW OF NORTH AMERICA, INC.

Oil sealing lip on shaft seal.

Drive in shaft seal (1) with special tool 24 2 360 as far as it will go.

cardiagn.com

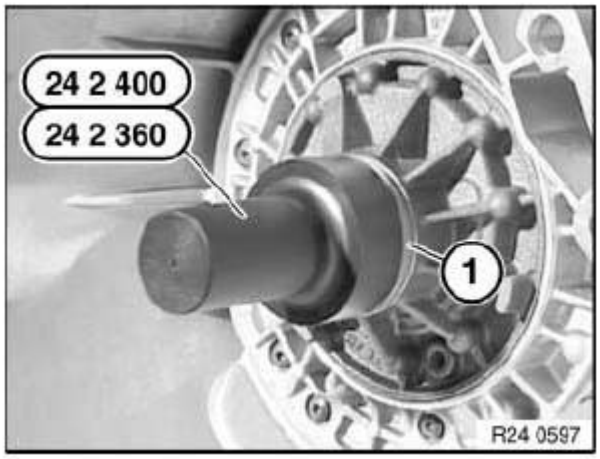

Fig. 32: Identifying Special Tool (24 2 360)
Courtesy of BMW OF NORTH AMERICA, INC.

13 EXTENSION HOUSING, BEA

24 13 012 REPLACING OUTPUT FLANGE SHAFT SEAL (GA6HP26Z)

Special tools required:

- 23 0 490
- 24 4 310

IMPORTANT: After completion of work, check transmission fluid level. See 00 11 500 CHECKING/TOPPING UP FLUID LEVEL IN AUTOMATIC TRANSMISSION (GA6HP26Z) .
Use only the approved transmission fluid. See AUTOMATIC TRANSMISSION - OPERATING FLUIDS .
Failure to comply with this requirement will result in serious damage to the automatic transmission!

Necessary preliminary tasks:

- Remove rear underbody protection. See **51 47 491 REMOVING AND INSTALLING/REPLACING REAR UNDERBODY PROTECTION** .
- Remove exhaust system. See **18 00 020 REMOVING AND INSTALLING COMPLETE EXHAUST SYSTEM (N52K)** .
- Remove heat shields
- Support transmission.
- Remove transfer box. See **27 10 010 REMOVING AND INSTALLING TRANSFER BOX ATC 700 (AUTOMATIC TRANSMISSION)** .

cardiagn.com

Drive a hole into radial shaft seal (1) using a center punch.

IMPORTANT: Do not use a drill as drillings may result in transmission malfunction.

Screw special tool 23 0 490 into radial shaft seal (1).

Drive out radial shaft seal (1) with impact weight (2).

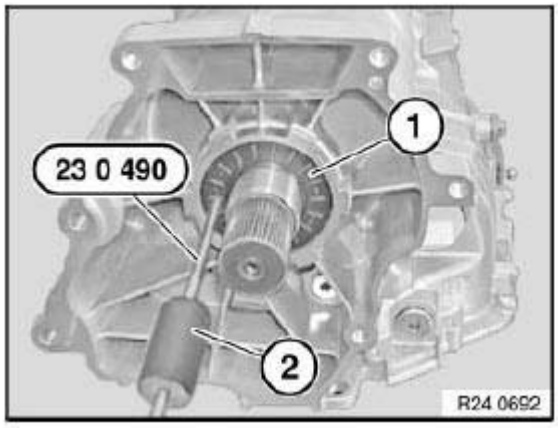

Fig. 33: Identifying Radial Shaft Seal With Special Tool (23 0 490)
Courtesy of BMW OF NORTH AMERICA, INC.

Installation:

Coat sealing lips of new radial seal with clean transmission oil.

Drive shaft seal firmly home with special tool 24 4 310.

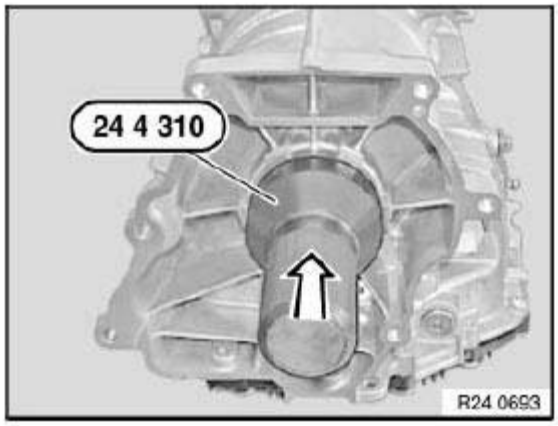

Fig. 34: Identifying Special Tool (24 4 310)
Courtesy of BMW OF NORTH AMERICA, INC.

cardiagn.com

14 MECHANICAL ATTACHMENTS

24 14 001 REPLACING SELECTOR SHAFT SEAL (GA6HP26Z)

Special tools required:

- 24 5 361
- 24 5 362
- 24 5 364
- 24 5 366

IMPORTANT: After completion of work, check transmission fluid level.
Use only the approved transmission fluid. See AUTOMATIC TRANSMISSION - OPERATING FLUIDS .
Failure to comply with this requirement will result in serious damage to the automatic transmission!

Necessary preliminary tasks:

- Remove underbody protection . See **51 47 491 REMOVING AND INSTALLING/REPLACING REAR UNDERBODY PROTECTION** .

Unfasten nut.

Remove cable (1).

Installation:

Adjusting cable:

- Release nut
- Adjust cable by means of holder (2)

  Distance A > or = 1 mm.

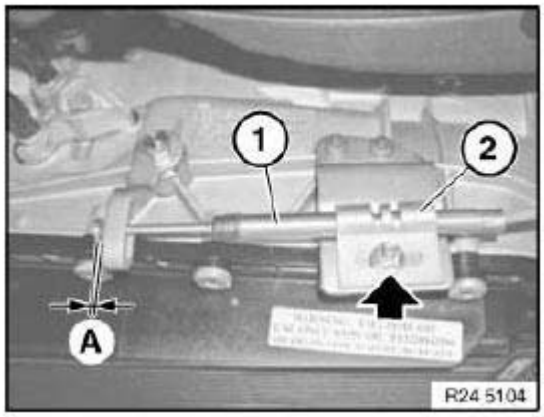

cardiagn.com

Fig. 35: Identifying Cable And Holder
Courtesy of BMW OF NORTH AMERICA, INC.

Unfasten nut.

Take off holder (1).

Tightening torque. See **AUTOMATIC TRANSMISSION - TIGHTENING TORQUES** .

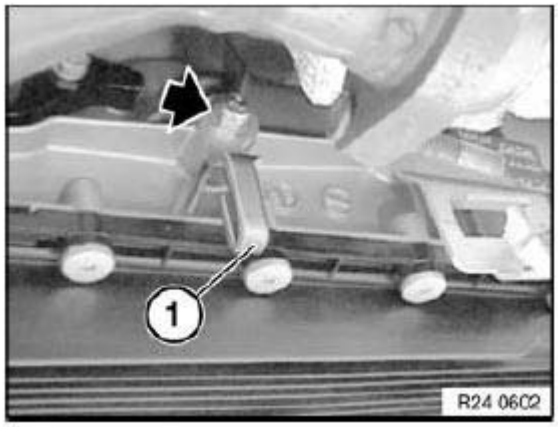

Fig. 36: Locating Nut And Holder
Courtesy of BMW OF NORTH AMERICA, INC.

Screw in special tool 24 5 361 until it is firmly connected with shaft seal.

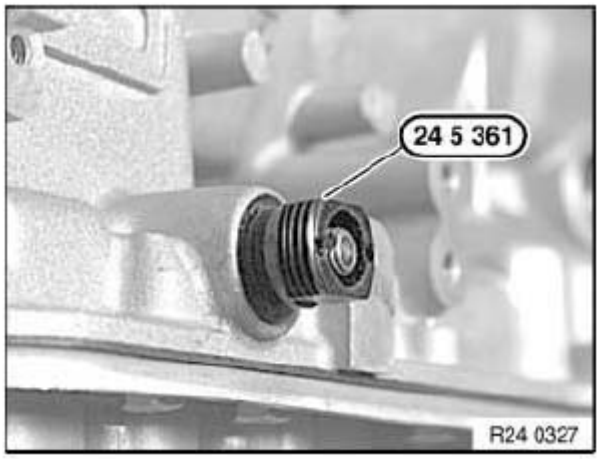

Fig. 37: Identifying Special Tool (24 5 361)
Courtesy of BMW OF NORTH AMERICA, INC.

Screw special tool 24 5 362 onto special tool 24 5 361 and tighten down.

This pulls the shaft seal out of the transmission housing.

cardiagn.com

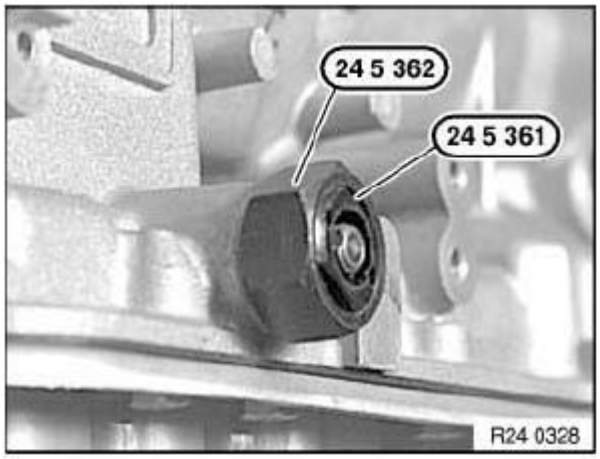

Fig. 38: Identifying Special Tool (24 5 362) And (24 5 361)
Courtesy of BMW OF NORTH AMERICA, INC.

Oil sealing lip on shaft seal (1).

Screw in shaft seal (1) with special tools 24 5 366 and 24 5 364 as far as it will go.

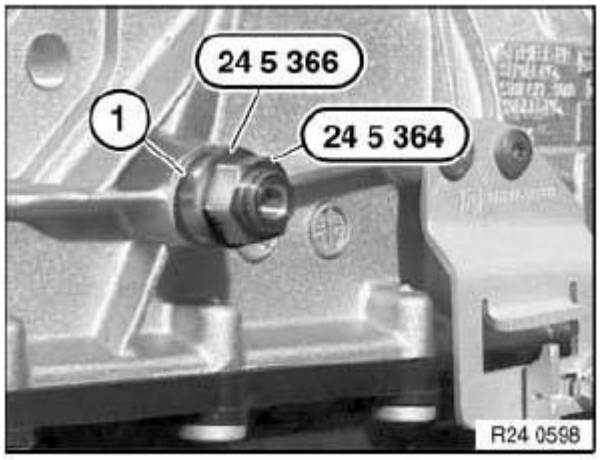

Fig. 39: Identifying Special Tools (24 5 366) And (24 5 364)
Courtesy of BMW OF NORTH AMERICA, INC.

31 OIL PUMP

24 31 010 REPLACING TORQUE CONVERTER SHAFT SEAL (GA6HP26Z)

Special tools required:

- 00 1 450
- 24 0 200
- 24 2 351

cardiagn.com

- 24 2 352
- 24 2 353
- 24 2 360

Necessary preliminary tasks:

- Remove automatic transmission. See **24 00 023 REMOVING AND INSTALLING AUTOMATIC TRANSMISSION (GA6HP26Z) N62TU**.

IMPORTANT: After completion of work, check transmission oil level. See 00 11 500 CHECKING/TOPPING UP FLUID LEVEL IN AUTOMATIC TRANSMISSION (GA6HP26Z) .
Use only approved transmission oil. See AUTOMATIC TRANSMISSION - OPERATING FLUIDS .
Failure to comply with this instruction will result in serious damage to the transmission.

Secure transmission with special tool 24 0 200 to assembly stand 00 1 450.

Remove torque converter. See **24 40 010 REMOVING AND INSTALLING/REPLACING TORQUE CONVERTER (GA6HP26Z)**.

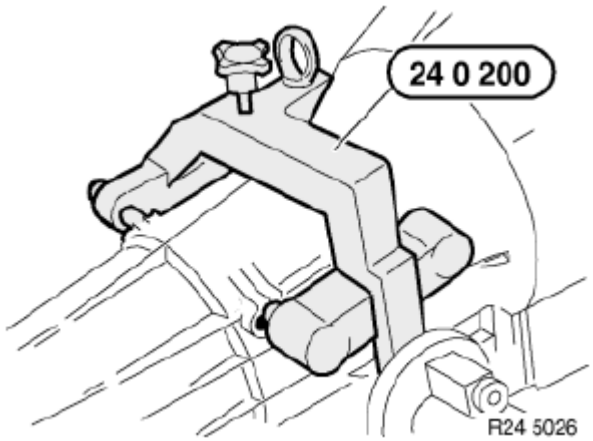

Fig. 40: Identifying Special Tool (24 0 200)
Courtesy of BMW OF NORTH AMERICA, INC.

Attach special tool 24 2 353 to drive shaft (1).

cardiagn.com

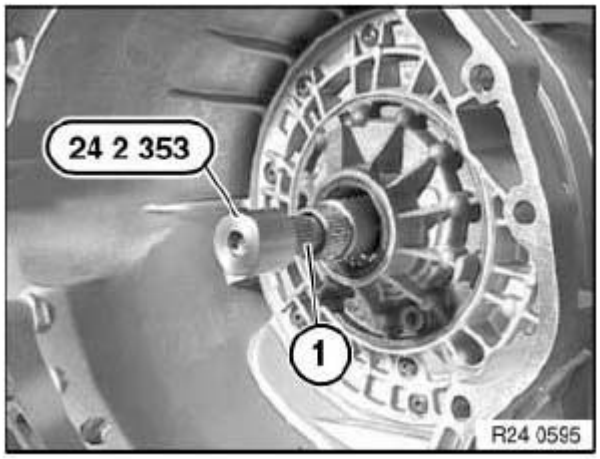

Fig. 41: Identifying Special Tool (24 2 353)
Courtesy of BMW OF NORTH AMERICA, INC.

Screw in special tool 24 2 351 until it is firmly connected with shaft seal.

Screw in special tool 24 2 352 to remove shaft seal.

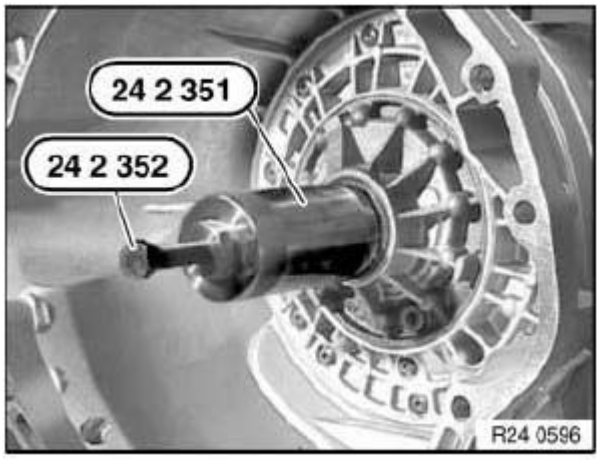

Fig. 42: Identifying Special Tool (24 2 351) And (24 2 352)
Courtesy of BMW OF NORTH AMERICA, INC.

Oil sealing lip on shaft seal.

Drive in shaft seal (1) with special tool 24 2 360 as far as it will go.

cardiagn.com

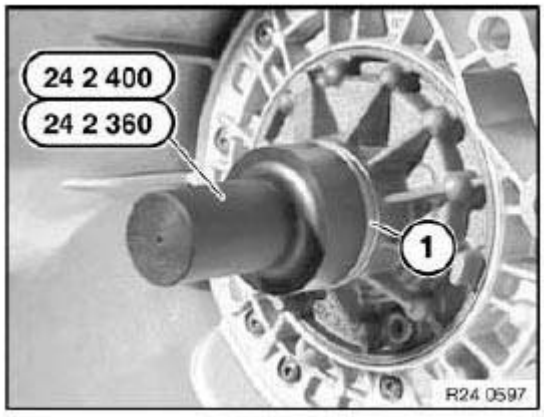

Fig. 43: Identifying Special Tool (24 2 360)
Courtesy of BMW OF NORTH AMERICA, INC.

32 REGULATOR

24 34 ... MANUAL EMERGENCY RELEASE OF TRANSMISSION LOCK

In the event of a power supply interruption, e.g. flat battery or electrical fault, the transmission lock must be manually released, otherwise the wheel will be locked and the vehicle cannot be moved.

IMPORTANT: Secure vehicle against rolling, e.g. with chocks.
Press the brake pedal when manually releasing the transmission lock, otherwise there is a risk that the vehicle will roll when the transmission lock is manually released.
If the parking brake has to be released as well, observe the following procedure:

1. **First, manually release the parking brake.**
2. **Then manually release the automatic transmission lock.**

NOTE: The release tool is located in the tool kit under the floor panel in the luggage compartment!

Slide back cover mat (1) of drinks holder and remove.

cardiagn.com

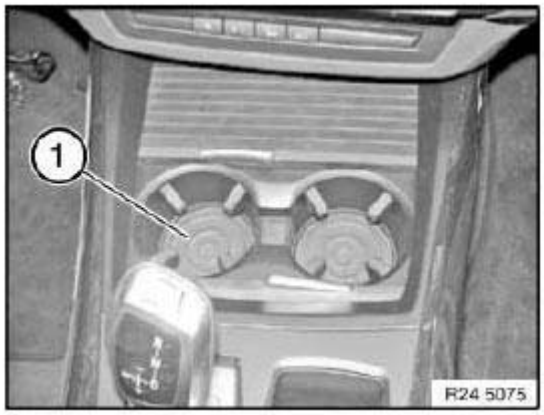

Fig. 44: Identifying Slide Back Cover Mat
Courtesy of BMW OF NORTH AMERICA, INC.

Open cover (1) in drinks holder base with release tool in direction of arrow.

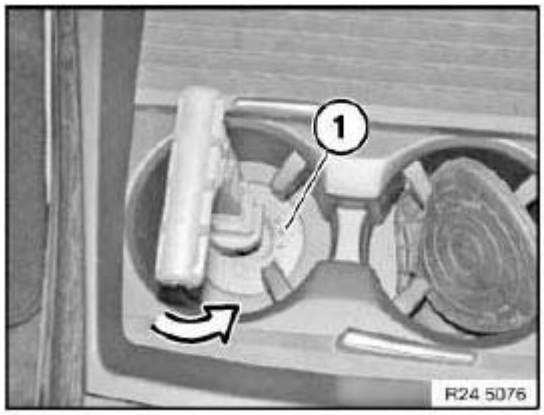

Fig. 45: Identifying Cover
Courtesy of BMW OF NORTH AMERICA, INC.

Insert release tool into opening.

Turn release tool clockwise up to stop and press down.

Transmission lock is released!

cardiagn.com

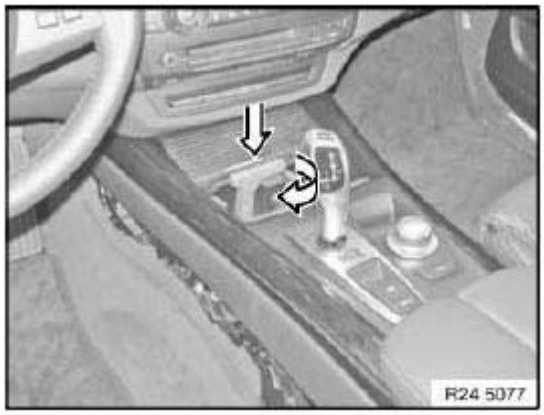

Fig. 46: Identifying Release Tool Turning Direction
Courtesy of BMW OF NORTH AMERICA, INC.

Locking transmission lock :

Pull out release tool in direction of arrow.

Transmission lock is locked.

Fig. 47: Identifying Release Tool Pulling Direction
Courtesy of BMW OF NORTH AMERICA, INC.

34 SHIFT VALVES, PARKING

24 34 ... MANUAL EMERGENCY RELEASE OF TRANSMISSION LOCK

In the event of a power supply interruption, e.g. flat battery or electrical fault, the transmission lock must be manually released, otherwise the wheel will be locked and the vehicle cannot be moved.

IMPORTANT: Secure vehicle against rolling, e.g. with chocks.
Press the brake pedal when manually releasing the transmission lock,

cardiagn.com

otherwise there is a risk that the vehicle will roll when the transmission lock is manually released.
If the parking brake has to be released as well, observe the following procedure:

1. **First, manually release the parking brake.**
2. **Then manually release the automatic transmission lock.**

NOTE: **The release tool is located in the tool kit under the floor panel in the luggage compartment!**

Slide back cover mat (1) of drinks holder and remove.

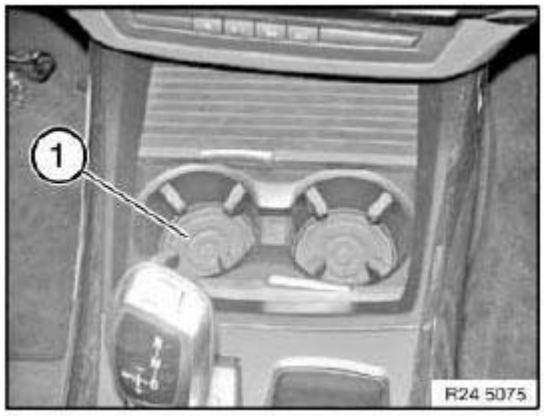

Fig. 48: Identifying Slide Back Cover Mat
Courtesy of BMW OF NORTH AMERICA, INC.

Open cover (1) in drinks holder base with release tool in direction of arrow.

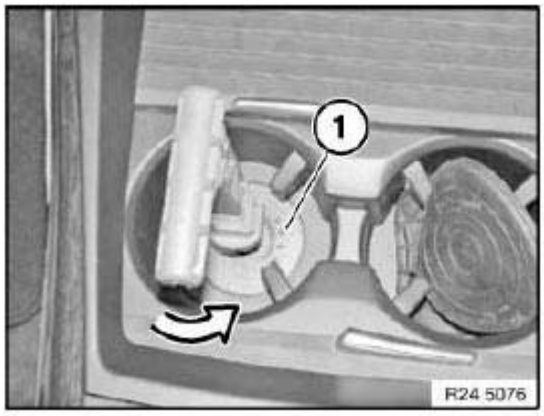

Fig. 49: Identifying Cover
Courtesy of BMW OF NORTH AMERICA, INC.

cardiagn.com

Insert release tool into opening.

Turn release tool clockwise up to stop and press down.

Transmission lock is released!

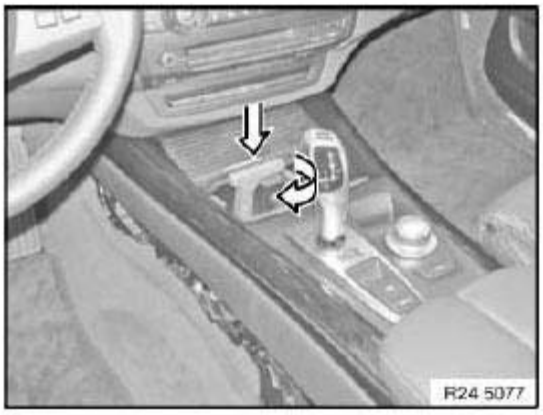

Fig. 50: Identifying Release Tool Turning Direction
Courtesy of BMW OF NORTH AMERICA, INC.

Locking transmission lock :

Pull out release tool in direction of arrow.

Transmission lock is locked.

Fig. 51: Identifying Release Tool Pulling Direction
Courtesy of BMW OF NORTH AMERICA, INC.

24 34 ... MANUALLY UNLOCKING TRANSMISSION LOCK

For various tasks, it is necessary to unlock and lock the transmission lock.

cardiagn.com

This can be done from inside or underneath the vehicle.

From vehicle interior:

- Refer to **MANUAL EMERGENCY UNLOCKING OF TRANSMISSION LOCK**.

Underneath car:

- Remove underbody protection . See **51 47 491 REMOVING AND INSTALLING/REPLACING REAR UNDERBODY PROTECTION** .
- Press lever (1) towards rear.

  Clamp lever firmly if permanently unlocking is desired.

Locking:

- Release lever (1) or release clamping

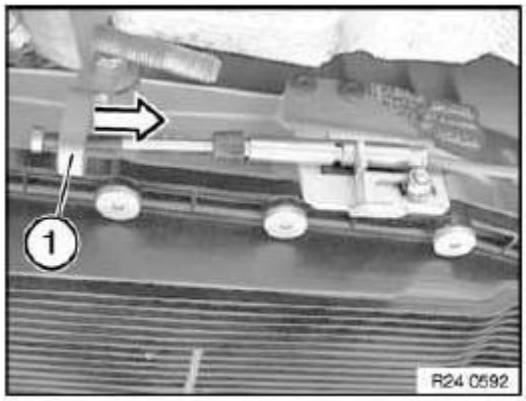

Fig. 52: Identifying Lever
Courtesy of BMW OF NORTH AMERICA, INC.

24 34 ... NOTES ON MECHATRONICS (GA6HP26Z/GA6HP32Z/GA6HP19Z)

Special tools required:

- 24 2 390

IMPORTANT: After completing work:

- **Load specific data version with DIS**
- **Check transmission fluid level . See 00 11 500 CHECKING/TOPPING UP FLUID LEVEL IN AUTOMATIC TRANSMISSION (GA6HP26Z) .**

cardiagn.com

Use only approved transmission fluid. See AUTOMATIC TRANSMISSION - OPERATING FLUIDS .
Failure to comply with this requirement will result in serious damage to the automatic transmission!

IMPORTANT: Read and comply with notes on protection against electrostatic damage (ESD protection). See 61 35... NOTES ON ESD PROTECTION (ELECTRO STATIC DISCHARGE) .

Unscrew plug (1) and disconnect.

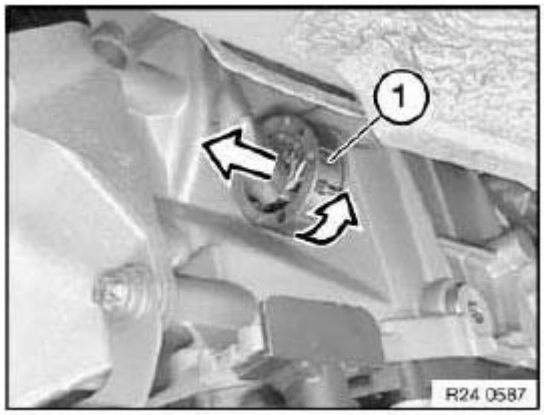

Fig. 53: Identifying Plug
Courtesy of BMW OF NORTH AMERICA, INC.

Insert special tool 24 2 390 in sealing sleeve (1).

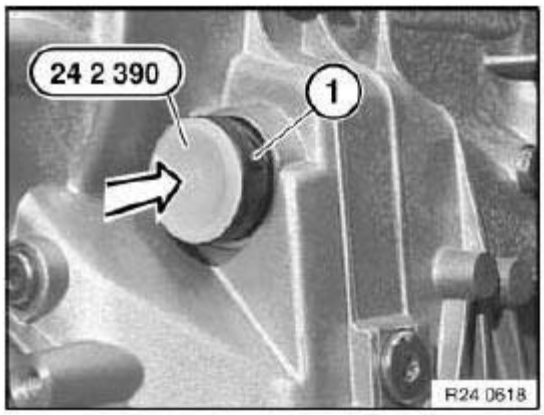

Fig. 54: Identifying Special Tool (24 2 390)
Courtesy of BMW OF NORTH AMERICA, INC.

24 34 020 REPLACING SEALING SLEEVE FOR TRANSMISSION HOUSING (GA6HP26Z)

cardiagn.com

Special tools required:

- 24 2 390

IMPORTANT: After completion of work, check transmission oil level. See 00 11 500 CHECKING/TOPPING UP FLUID LEVEL IN AUTOMATIC TRANSMISSION (GA6HP26Z) .
Use only approved transmission fluid. See AUTOMATIC TRANSMISSION - OPERATING FLUIDS .
Failure to comply with this requirement will result in serious damage to the automatic transmission!

Necessary preliminary tasks:

- Remove underbody protection . See **51 47 491 REMOVING AND INSTALLING/REPLACING REAR UNDERBODY PROTECTION** .
- Remove transmission oil sump . See **24 11 010 REMOVING AND INSTALLING/SEALING OR REPLACING TRANSMISSION SUMP (GA6HP26Z)**.

IMPORTANT: Support transmission with workshop hoist.

Unlock and disconnect plug (1) by turning.

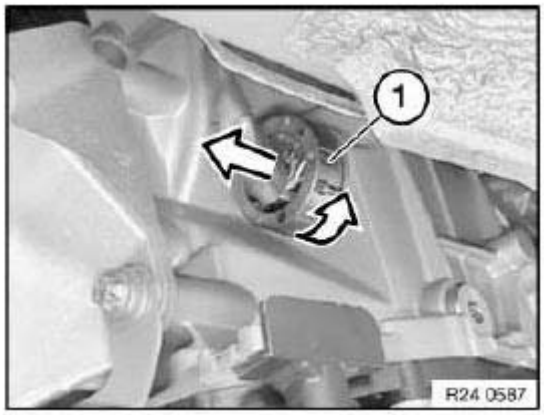

Fig. 55: Identifying Plug
Courtesy of BMW OF NORTH AMERICA, INC.

Insert special tool 24 2 390 in sealing sleeve (1).

cardiagn.com

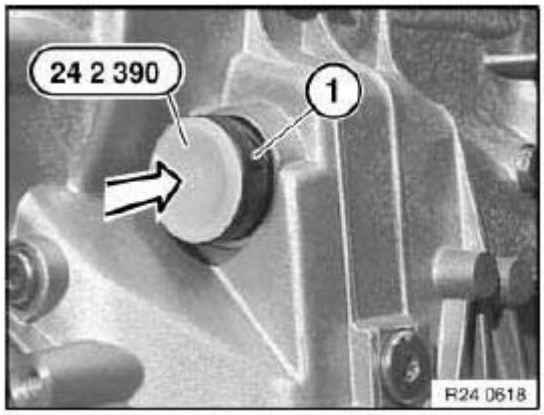

Fig. 56: Identifying Special Tool (24 2 390)
Courtesy of BMW OF NORTH AMERICA, INC.

Unlock sealing sleeve with slide (1).

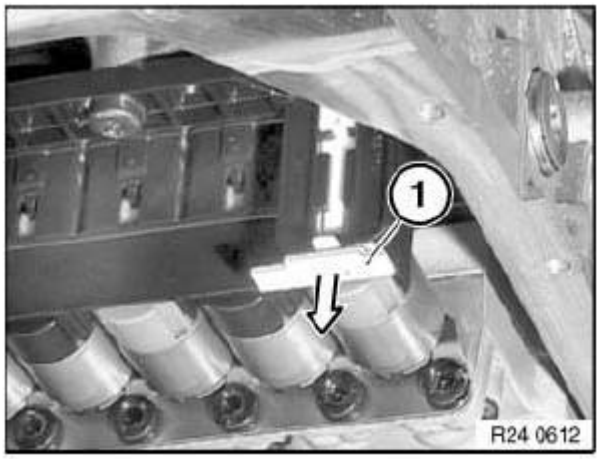

Fig. 57: Identifying Sealing Sleeve With Slide
Courtesy of BMW OF NORTH AMERICA, INC.

NOTE: Note position of sealing sleeve.

Pull out sealing sleeve (1).

Installation:

Screw in sealing sleeve partially (lug in upper area). Turn until lug engages in groove of transmission. Slide in sealing sleeve.

Lug on sealing sleeve must not be damaged!

cardiagn.com

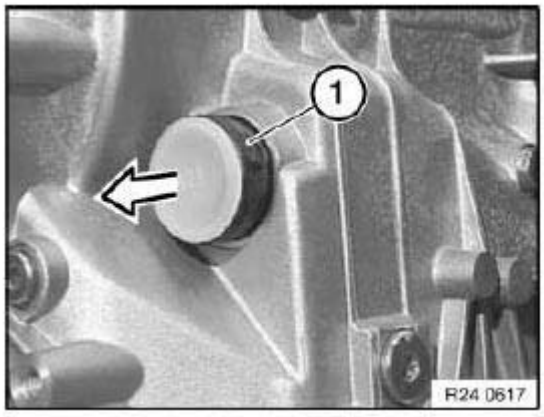

Fig. 58: Identifying Sealing Sleeve
Courtesy of BMW OF NORTH AMERICA, INC.

24 34 561 REPLACING MECHATRONICS (GA6HP26Z/6HP32Z)

Special tools required:

- 24 2 390

NOTE: After completing work:

- **Load specific data version with DIS.**

IMPORTANT: After completion of work, check transmission oil level. See 00 11 500 CHECKING/TOPPING UP FLUID LEVEL IN AUTOMATIC TRANSMISSION (GA6HP26Z) .
Use only approved transmission fluid. See AUTOMATIC TRANSMISSION - OPERATING FLUIDS .
Failure to comply with this requirement will result in serious damage to the automatic transmission!

IMPORTANT: Read and comply with notes on protection against electrostatic damage (ESD protection). See 61 35... NOTES ON ESD PROTECTION (ELECTRO STATIC DISCHARGE) .

Necessary preliminary tasks:

E60/E61/E63/E64, E70 N62 only:

- Remove exhaust system at manifold and lower. See **18 00 020 REMOVING AND INSTALLING COMPLETE EXHAUST SYSTEM (N52K)** .
- Release crossmember from exhaust system on transmission.
- Remove left and right heat shields.

cardiagn.com

- Remove transmission crossmember.

Secure lever (1) with a cable tie (2) or wire in vertical position.

NOTE: Illustration shows E65.

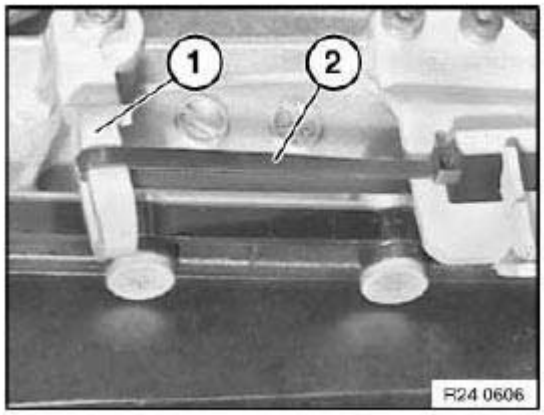

Fig. 59: Identifying Lever And Cable Tie
Courtesy of BMW OF NORTH AMERICA, INC.

IMPORTANT: Mechatronics can be destroyed by static discharges. Therefore the contacts inside the plug must not be touched. Insert special tool immediately after work step.

Unscrew plug (1) and disconnect.

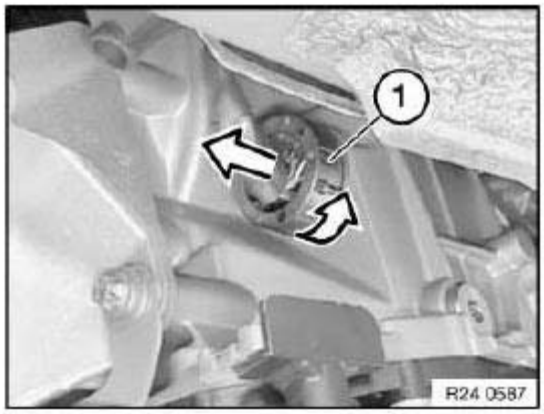

Fig. 60: Identifying Plug
Courtesy of BMW OF NORTH AMERICA, INC.

Insert special tool 24 2 390 in sealing sleeve (1).

Remove transmission oil sump. See **24 11 010 REMOVING AND INSTALLING/SEALING OR**

cardiagn.com

REPLACING TRANSMISSION SUMP (GA6HP26Z).

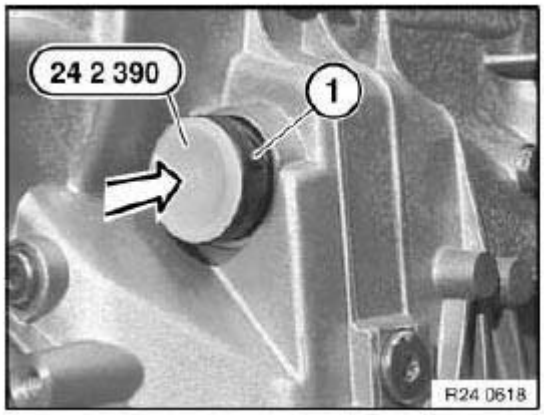

Fig. 61: Identifying Special Tool (24 2 390)
Courtesy of BMW OF NORTH AMERICA, INC.

Unlock sealing sleeve with slide (1).

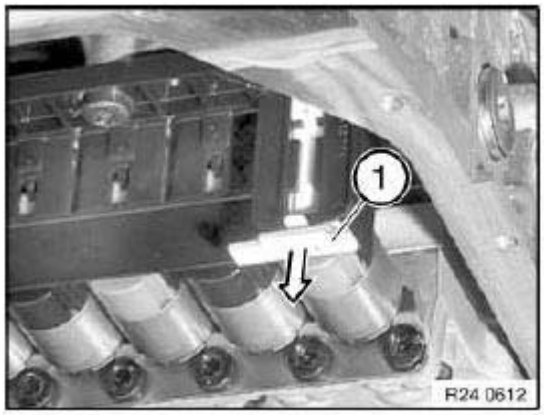

Fig. 62: Identifying Sealing Sleeve With Slide
Courtesy of BMW OF NORTH AMERICA, INC.

Note position of sealing sleeve.

Pull out sealing sleeve (1).

Installation:

Screw in sealing sleeve partially (lug in upper area). Turn until lug engages in groove of transmission. Slide in sealing sleeve.

Lug on sealing sleeve must not be damaged!

cardiagn.com

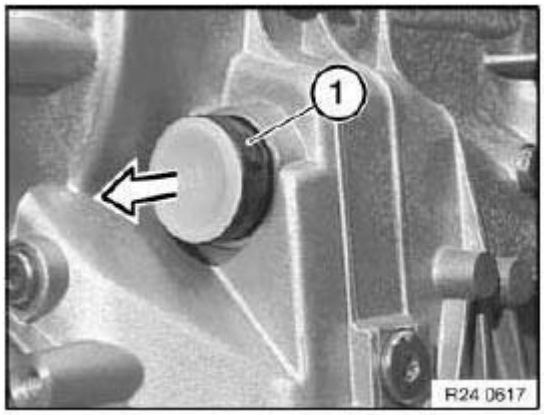

Fig. 63: Identifying Sealing Sleeve
Courtesy of BMW OF NORTH AMERICA, INC.

Release all screws (1 and 2).

- 1 = M6 x 58 mm
- 2 = M6 x 20 mm

Remove mechatronics.

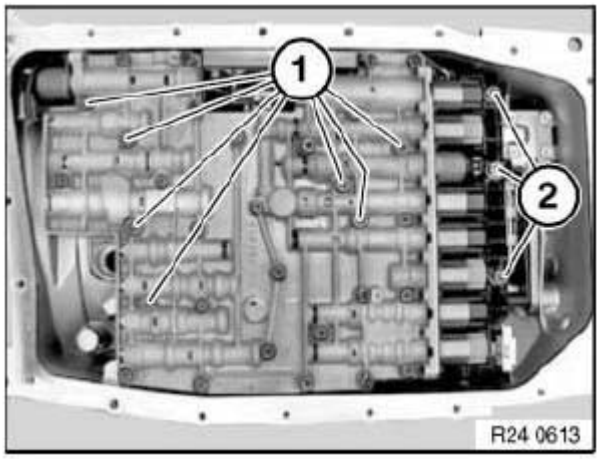

Fig. 64: Identifying Screws
Courtesy of BMW OF NORTH AMERICA, INC.

IMPORTANT: E65/66 only:
Mechatronics without protective bar for solenoid valve must not be reused after removal.

cardiagn.com

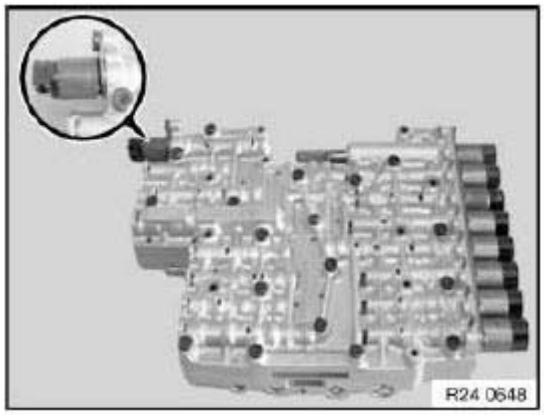

Fig. 65: Identifying Protective Bar And Solenoid Valve
Courtesy of BMW OF NORTH AMERICA, INC.

IMPORTANT: E65/66 only:
Fit/reuse only mechatronics with protective bar (1) for solenoid valve.

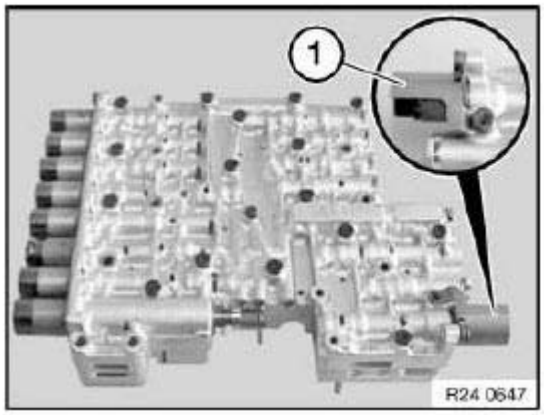

Fig. 66: Identifying Protective Bar
Courtesy of BMW OF NORTH AMERICA, INC.

Installation:

Check gaskets (1 and 2) for damage, replace gaskets if necessary.

Coat new seals with automatic transmission fluid and install.

cardiagn.com

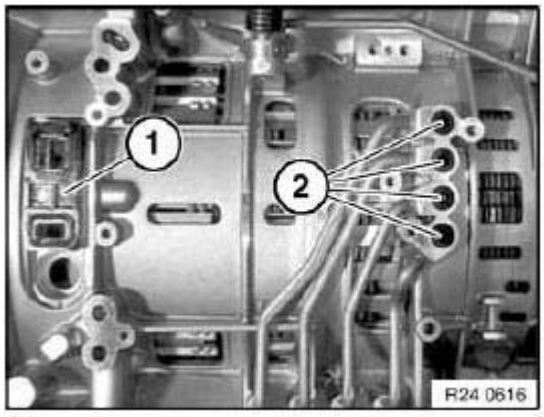

Fig. 67: Identifying Gaskets
Courtesy of BMW OF NORTH AMERICA, INC.

Installation:

Insert screws (3) alternately until contact is made with each screw head.

Insert all further screws contact is made with each screw head.

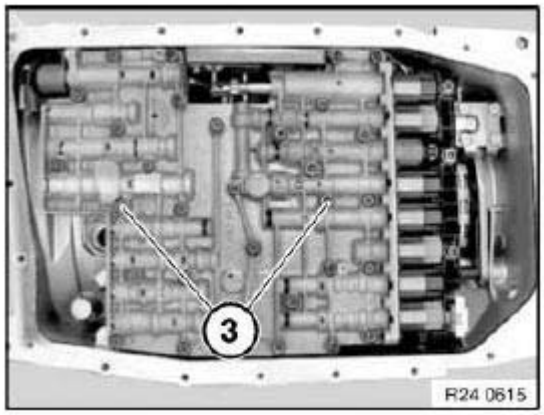

Fig. 68: Identifying Screws
Courtesy of BMW OF NORTH AMERICA, INC.

IMPORTANT: Tighten down screws in order 1...10.
Failure to comply with this requirement will result in serious damage to the automatic transmission!

Tightening torque. See AUTOMATIC TRANSMISSION - TIGHTENING TORQUES .

cardiagn.com

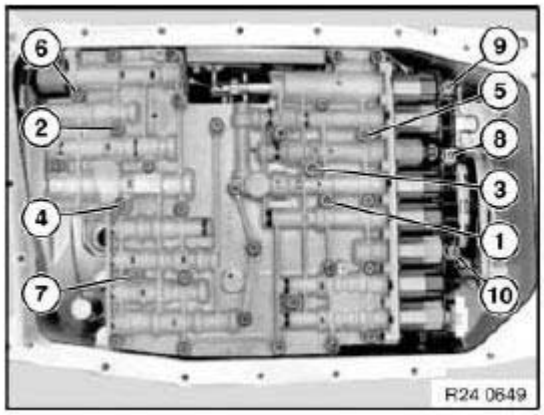

Fig. 69: Identifying Screws Tightening Sequence
Courtesy of BMW OF NORTH AMERICA, INC.

40 TORQUE CONVERTER

24 40 010 REMOVING AND INSTALLING/REPLACING TORQUE CONVERTER (GA6HP26Z)

Special tools required:

- 00 2 550
- 24 4 000

IMPORTANT: After completion of work, check transmission fluid level. See 00 11 500 CHECKING/TOPPING UP FLUID LEVEL IN AUTOMATIC TRANSMISSION (GA6HP26Z) .
Use only approved transmission oil. See AUTOMATIC TRANSMISSION - OPERATING FLUIDS .
Failure to comply with this instruction will result in serious damage to the transmission.

Necessary preliminary tasks:

- Remove automatic transmission . See **24 00 023 REMOVING AND INSTALLING AUTOMATIC TRANSMISSION (GA6HP26Z) N62TU**.

Screw special tool 24 4 000 into torque converter.

Remove torque converter.

NOTE: When torque converter is removed, transmission oil flows out.

cardiagn.com

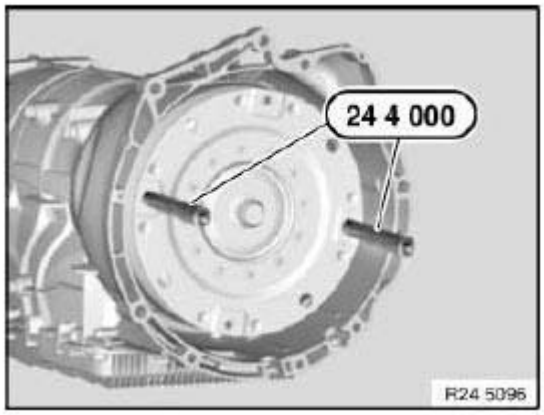

Fig. 70: Identifying Special Tool (24 4 000)
Courtesy of BMW OF NORTH AMERICA, INC.

Installation:

When installing, do not damage shaft seal and bearing.

If the torque converter is not correctly installed, the driver of the pump impeller may be damaged when the transmission is flanged to the engine.

Remove torque converter and set down vertically.

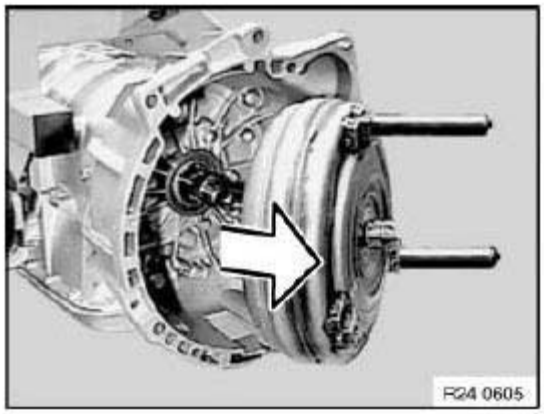

Fig. 71: Removing Torque Converter
Courtesy of BMW OF NORTH AMERICA, INC.

Installation:

Push torque converter through shaft seal onto transmission shaft as far as it will go.

Press torque converter by hand into converter housing and turn in the process. Converter hub opening must snap into place in driver of pump impeller. Torque converter must be felt to slip inwards.

cardiagn.com

Determine distance between contact surface and surface (1) of tapped hole in torque converter with special tool 00 2 550.

NOTE: Measured value must be greater than 25 mm.

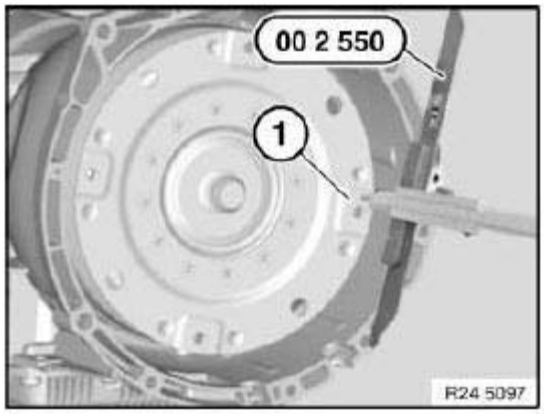

Fig. 72: Identifying Torque Converter With Special Tool (00 2 550)
Courtesy of BMW OF NORTH AMERICA, INC.

cardiagn.com