CHRYSLER

2019 Pacifica

OWNER'S MANUAL

VEHICLES SOLD IN CANADA

With respect to any Vehicles Sold in Canada, the name FCA US LLC shall be deemed to be deleted and the name FCA Canada Inc. used in substitution therefore.

DRIVING AND ALCOHOL

Drunken driving is one of the most frequent causes of accidents.

Your driving ability can be seriously impaired with blood alcohol levels far below the legal minimum. If you are drinking, don't drive. Ride with a designated non-drinking driver, call a cab, a friend, or use public transportation.

WARNING!
Driving after drinking can lead to an accident. Your perceptions are less sharp, your reflexes are slower, and your judgment is impaired when you have been drinking. Never drink and then drive.

This manual illustrates and describes the operation of features and equipment that are either standard or optional on this vehicle. This manual may also include a description of features and equipment that are no longer available or were not ordered on this vehicle. Please disregard any features and equipment described in this manual that are not on this vehicle.

FCA US LLC reserves the right to make changes in design and specifications, and/or make additions to or improvements to its products without imposing any obligation upon itself to install them on products previously manufactured.

Copyright © 2018 FCA US LLC

TABLE OF CONTENTS

SECTION		PAGE
1	INTRODUCTION	3
2	GRAPHICAL TABLE OF CONTENTS	7
3	GETTING TO KNOW YOUR VEHICLE	13
4	GETTING TO KNOW YOUR INSTRUMENT PANEL	189
5	SAFETY	219
6	STARTING AND OPERATING	317
7	IN CASE OF EMERGENCY	441
8	SERVICING AND MAINTENANCE	507
9	TECHNICAL SPECIFICATIONS	569
10	MULTIMEDIA	581
11	CUSTOMER ASSISTANCE	693
12	INDEX	699

INTRODUCTION

CONTENTS

■ INTRODUCTION 4
■ HOW TO USE THIS MANUAL 5
□ Essential Information 5
□ Symbols 5
■ WARNINGS AND CAUTIONS 5
■ VEHICLE MODIFICATIONS/ALTERATIONS 5

INTRODUCTION

Dear Customer,

Congratulations on selecting your new vehicle. Be assured that it represents precision workmanship, distinctive styling, and high quality. This Owner's Manual has been prepared with the assistance of service and engineering specialists to acquaint you with the operation and maintenance of your vehicle. It is supplemented by Warranty Information, and customer oriented documents. In the attached Warranty Booklet, you will find a description of the services that FCA offers to its customers, the Warranty Certificate and the details of the terms and conditions for maintaining its validity. Please take the time to read all of these publications carefully before driving your vehicle for the first time. Following the instructions, recommendations, tips, and important warnings in this manual will help assure safe and enjoyable operation of your vehicle. Be sure you are familiar with all vehicle controls, particularly those used for braking, steering, transmission, and transfer case shifting (if equipped). Learn how your vehicle handles on different road surfaces. Your driving skills will improve with experience.

This Owner's Manual describes all versions of this vehicle. Options and equipment dedicated to specific markets or versions are not expressly indicated in the text. Therefore, you should only consider the information which is related to the trim level, engine, and version that you have purchased. Any content introduced throughout the Owner's Information, that may or may not be applicable to your vehicle, will be identified with the wording "If Equipped". All data contained in this publication are intended to help you use your vehicle in the best possible way. FCA aims at a constant improvement of the vehicles produced. For this reason, it reserves the right to make changes to the model described for technical and/or commercial reasons. For further information, contact an authorized dealer.

NOTE: After reviewing the Owner's Information, it should be stored in the vehicle for convenient referencing, and remain with the vehicle when sold.

When it comes to service, remember that an authorized dealer knows your vehicle best, has factory-trained technicians and genuine MOPAR® parts, and cares about your satisfaction.

HOW TO USE THIS MANUAL

Essential Information

Consult the Table of Contents to determine which section contains the information you desire.

Since the specification of your vehicle depends on the items of equipment ordered, certain descriptions and illustrations may differ from your vehicle's equipment.

The detailed index at the back of this Owner's Manual contains a complete listing of all subjects.

Symbols

Some vehicle components have colored labels whose symbols indicate precautions to be observed when using this component. Refer to "Warning Lights and Messages" in "Getting To Know Your Instrument Panel" for further information on the symbols used in your vehicle.

WARNINGS AND CAUTIONS

This Owner's Manual contains **WARNINGS** against operating procedures that could result in a collision, bodily injury and/or death. It also contains **CAUTIONS** against procedures that could result in damage to your vehicle. If you do not read this entire Owner's Manual, you may miss important information. Observe all Warnings and Cautions.

VEHICLE MODIFICATIONS/ALTERATIONS

WARNING!

Any modifications or alterations to this vehicle could seriously affect its roadworthiness and safety and may lead to a collision resulting in serious injury or death.

GRAPHICAL TABLE OF CONTENTS

CONTENTS

- FRONT VIEW 8
- REAR VIEW 9
- INSTRUMENT PANEL 10
- INTERIOR 11

FRONT VIEW

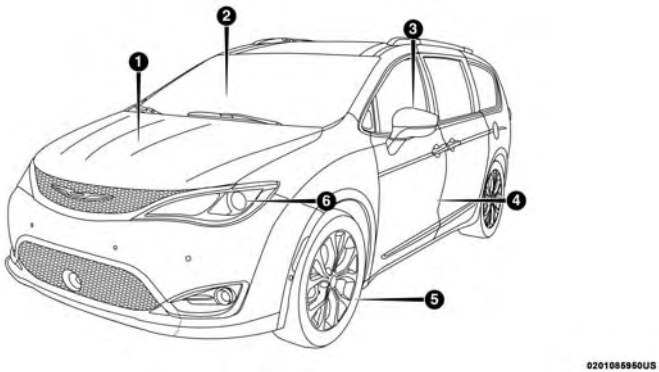

Front View

1 — Hood/Engine Compartment
2 — Windshield
3 — Exterior Mirrors
4 — Doors
5 — Wheels/Tires
6 — Headlights

REAR VIEW

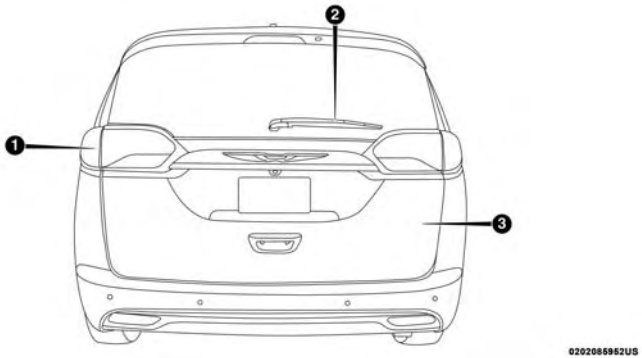

Rear View

1 — Tail Lamps
2 — Rear Windshield Wiper
3 — Liftgate

INSTRUMENT PANEL

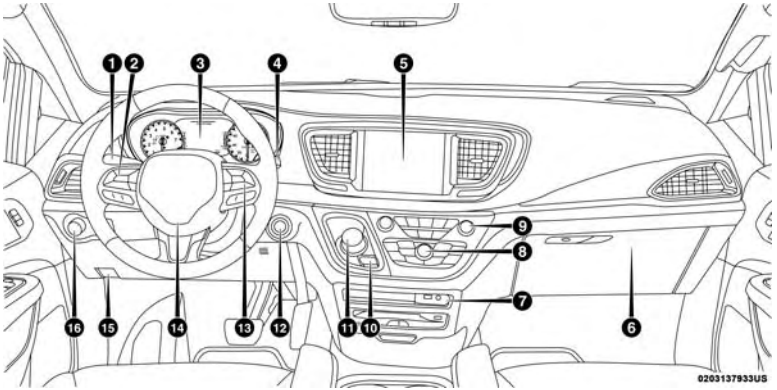

Instrument Panel

1 — Multifunction Lever
2 — Instrument Cluster Display Controls
3 — Instrument Cluster
4 — Windshield Wiper Lever
5 — Uconnect System
6 — Glove Compartment
7 — Front Center Stack AUX Jack and USB Port
8 — Climate Controls
9 — Switch Panel
10 — Electronic Park Brake Switch
11 — Gear Selector
12 — Ignition
13 — Speed Controls
14 — Steering Wheel
15 — Hood Release
16 — Headlight Switch

INTERIOR

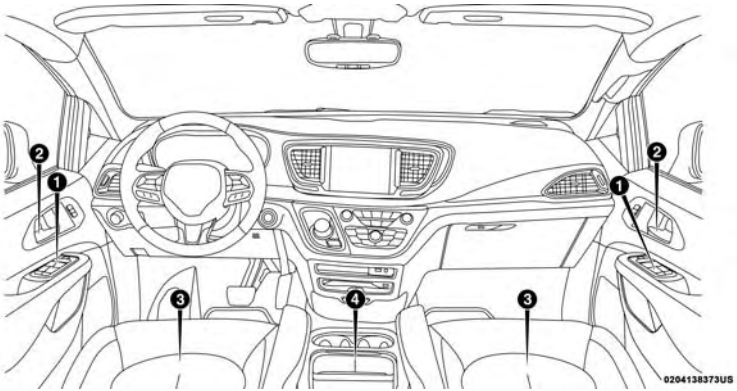

Interior Features

1 — Power Window/Door Lock Switches
2 — Door Handles
3 — Seats
4 — Storage Compartment

GETTING TO KNOW YOUR VEHICLE

CONTENTS

■ VEHICLE USER GUIDE — IF EQUIPPED 18

■ KEYS 20

- Key Fob 20

■ IGNITION SWITCH 28

- Keyless Enter-N-Go — Ignition 28

■ REMOTE STARTING SYSTEM — IF EQUIPPED . . .30

- How To Use Remote Start. 30
- Remote Start Cancel Message — If Equipped 31
- To Enter Remote Start Mode 32
- To Exit Remote Start Mode Without Driving The Vehicle 32
- To Exit Remote Start Mode And Drive The Vehicle 32
- Remote Start Comfort Systems — If Equipped . . .33
- General Information 33

■ SENTRY KEY 33

- Key Programming 34
- Replacement Keys 34
- General Information 34

■ VEHICLE SECURITY ALARM — IF EQUIPPED . . .35

- To Arm The System 35
- To Disarm The System 35
- Rearming Of The System 36

■ DOORS 36

- Manual Lock. 36
- Central Lock/Unlock — If Equipped 39
- Unlock Doors Automatically On Exit — If Equipped 39
- Keyless Enter-N-Go — Passive Entry 39

- Manual Sliding Side Door. 43
- Power Sliding Side Door — If Equipped 45
- Hands-Free Sliding Doors — If Equipped. 47
- Child Locks. 48

■ SEATS 50
- Manual Adjustment (Front Seats) — If Equipped .50
- Manual Adjustment (Rear Seats) 52
- Power Adjustment (Front Seats) — If Equipped . .73
- Power Adjustment (Rear Seats) — If Equipped . .75
- Driver Memory Seat — If Equipped 79
- Heated Seats 81
- Ventilated Seats — If Equipped. 83
- Adjustable Armrest (Front Seats) — If Equipped. .84
- Plastic Grocery Bag Retainer Hooks. 84

■ HEAD RESTRAINTS 85
- Head Restraints — Front Seats 85
- Head Restraints — Second Row Quad Seats. 87
- Head Restraints — Second Row Bench. 87
- Head Restraints — Third Row 88

■ STEERING WHEEL 90
- Tilt/Telescoping Steering Column 90
- Heated Steering Wheel — If Equipped 91

■ MIRRORS 92
- Inside Day/Night Mirror — If Equipped 92
- Automatic Dimming Mirror — If Equipped 92
- Outside Mirrors 93
- Driver's Outside Automatic Dimming Mirror — If Equipped 93
- Conversation Mirror 94
- Power Mirrors — If Equipped 94
- Outside Mirrors Folding Feature 95
- Heated Mirrors — If Equipped 95
- Tilt Side Mirrors In Reverse (Available With Memory Seat Only) — If Equipped 95
- Power Folding Mirrors — If Equipped. 95

- Illuminated Vanity Mirrors — If Equipped 96

■ EXTERIOR LIGHTS 97

- Multifunction Lever 97
- Headlight Switch 97
- Daytime Running Lights — If Equipped 98
- High/Low Beam Switch 98
- Automatic High Beam — If Equipped 98
- Flash-To-Pass 99
- Automatic Headlights — If Equipped 99
- Headlights On With Wipers — If Equipped 99
- Headlight Delay — If Equipped 99
- Lights-On Reminder 100
- Front Fog Lights — If Equipped 100
- Turn Signals 100
- Lane Change Assist — If Equipped 101
- Battery Protection 101

■ INTERIOR LIGHTS 101

- Courtesy/Interior Lighting 101

■ WINDSHIELD WIPER AND WASHERS 104

- Windshield Wiper Operation 104
- Rain Sensing Wipers — If Equipped 106
- Rear Wiper And Washer 107

■ CLIMATE CONTROLS 108

- Manual Climate Controls Overview 108
- Automatic Uconnect 4 Climate Control Overview 121
- Automatic Uconnect 4C/4C NAV Climate Control Overview 122
- Climate Control Functions. 134
- Automatic Temperature Control (ATC) — If Equipped 135
- Operating Tips 136

■ WINDOWS 138
□ Power Windows. 138
■ PANORAMIC SUNROOF — IF EQUIPPED 141
□ Opening Sunroof 142
□ Closing Sunroof 143
□ Wind Buffeting 143
□ Power Sun Shade — If Equipped. 143
□ Pinch Protect Feature 144
□ Sunroof Maintenance 144
□ Ignition Off Operation 144
■ HOOD 145
□ Opening 145
□ Closing 146
■ LIFTGATE 146
□ Opening 146
□ Closing 147
□ Power Liftgate — If Equipped 148
□ Hands-Free Liftgate — If Equipped 150
□ Cargo Area Features 152
■ GARAGE DOOR OPENER — IF EQUIPPED 160
□ Before You Begin Programming HomeLink. 160
□ Canadian/Gate Operator Programming 163
□ Using HomeLink 164
□ Security. 165
□ Troubleshooting Tips 165
□ General Information 166
■ INTERNAL EQUIPMENT 166
□ Storage 166
□ Sun Screens — If Equipped. 173
□ Power Outlets 174
□ Power Inverter — If Equipped 177
□ Wireless Charging Pad — If Equipped 177

□ Cigar Lighter — If Equipped 179
□ Smoker's Package Kit — If Equipped 179
□ Overhead Sunglass Storage 180
■ ROOF LUGGAGE RACK — IF EQUIPPED 180
□ Deploying The Crossbars 181
□ Stowing The Crossbars 183

VEHICLE USER GUIDE — IF EQUIPPED

Access your Owner's Information right through your Uconnect 4C or 4C NAV touchscreen system — If Equipped.

To access the Vehicle User Guide on your Uconnect Touchscreen: Press the Uconnect **Apps** button. From there, press the **Vehicle User Guide** icon on your touchscreen. No Uconnect registration is required.

Uconnect 4C NAV With 8.4–inch Display Vehicle User Guide Touchscreen Icon

NOTE: Vehicle User Guide features are not available while the vehicle is moving. If you try to access while the vehicle is in motion, the system will display: Feature not available while the vehicle is in motion.

Pre-Installed Features

Your User Guide — Updated in real-time	Available when and where you need it
Touchscreen convenience	Customizable interface
Maintenance schedules and information	Multilingual
Comprehensive icon & symbol glossary	

Once you launch your Vehicle User Guide, you will be able to explore your warranty information and radio manual when and where you need them. Your Uconnect system displays the Vehicle User Guide on your touchscreen radio to assist in better understanding your vehicle. There's no app to download, no phone to connect and no external device needed for playback. Plus, it's updated throughout the year, in real-time, so it never goes out of date.

Features/Benefits

- Pre-installed on your Uconnect touchscreen radio
- Enhanced search and browsing capability
- Robust NAV application — If Equipped
- Add selected topics to a fast-access Favorites category
- Icon and symbol glossary
- Warranty information
- Crucial driver information and assistance:

Operating Instructions	Maintenance Schedules
Warranty Information	Emergency Procedures
Fluid Level Standards	911 Contact and More

Tip: When viewing a topic, tap the star icon to add it to your Favorites, for easy access in the future.

KEYS

Key Fob

Your vehicle uses a keyless ignition system. The ignition system consists of a key fob with Remote Keyless Entry (RKE) and a START/STOP push button ignition system. The Remote Keyless Entry system uses a receiver module in the vehicle that wirelessly links with the key fob.

NOTE: The key fob may not be found if it is located next to a mobile phone, laptop or other electronic device; these devices may block the key fob's wireless signal.

This system allows you to lock or unlock the doors and liftgate, activate the Panic Alarm, optional power liftgate, left power sliding door, and right power sliding door from distances up to approximately 66 ft (20 m) using a key fob. When any button on the key fob is pushed, or when any signal is being transferred between the key fob and the vehicle, an LED light on the key fob will flash as an indicator. The key fob does not need to be pointed at the vehicle to activate the system.

NOTE: The emergency key allows for entry into the vehicle should the battery in the vehicle or the key fob go dead. The emergency key is also for locking/unlocking the glove compartment. You can keep the emergency key with you when valet parking.

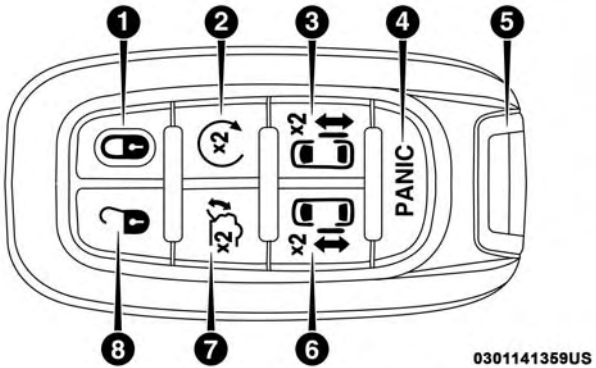

Key Fob

1 — Lock
2 — Remote Start
3 — Right Power Sliding Side Door
4 — PANIC Alarm
5 — Emergency Key
6 — Left Power Sliding Side Door
7 — Liftgate
8 — Unlock

In case the ignition switch does not change with the push of a button, the key fob may have a low or fully depleted battery. A low key fob battery can be verified by referring to the instrument cluster, which will display directions to follow.

NOTE:

- A low key fob battery condition may be indicated by a message in the instrument cluster display, or by the LED light on the key fob. If the LED key fob light no longer illuminates from key fob button pushes, then the key fob battery requires replacement.
- The key fob LED light brightness is designed for indoor light viewing, so the LED light may not be visible in direct sunlight.

In a situation where the battery is low or fully depleted, a back up method can be used to operate the ignition switch. Put the nose side of the key fob (side opposite of the Emergency Key) against the ENGINE START/STOP button and push to operate the ignition switch.

To Unlock The Doors

NOTE: Uconnect Settings lets you program the system to unlock either the driver's side doors on the first push (default) or unlock all doors on the first push of the unlock button on the key fob. To change the default setting, refer to "Uconnect Settings" in "Multimedia" for further information.

1st Push Of Key Fob Unlocks

Push and release the unlock button on the key fob once to unlock the driver front door and sliding door or twice within five seconds to unlock all doors and liftgate. The hazard lights will flash to acknowledge the unlock signal. The illuminated entry system will be activated.

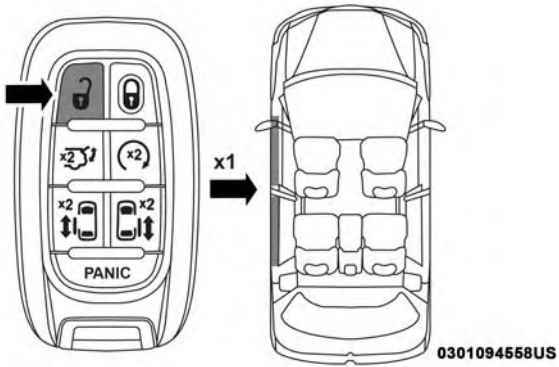

First Push Unlock

2nd Push Of Key Fob Unlocks

Push and release the unlock button on the key fob twice within five seconds to unlock all doors and liftgate. The turn signal lights will flash to acknowledge the unlock signal. The illuminated entry system will be activated.

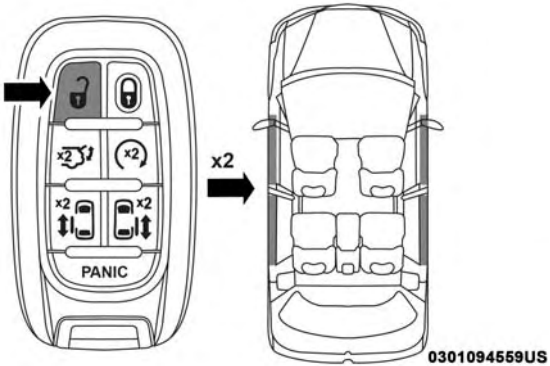

Second Push Unlock

This feature lets you program the system to unlock either the driver's side doors or all doors on the first push of the unlock button on the key fob. To change the current setting, refer to "Uconnect Settings" in "Multimedia" for further information.

NOTE: Your vehicle is equipped with Passive Entry; refer to "Keyless Enter-N-Go — Passive Entry" in "Getting To Know Your Vehicle" for further information.

Emergency Key Feature

The key fob also contains an emergency key. The emergency key is stored in the bottom of the key fob.

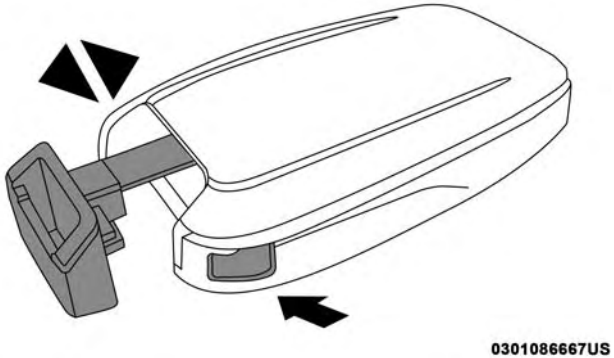

Mechanical Latch To Release Emergency Key

The emergency key allows for entry into the vehicle should the battery in the vehicle or the key fob go dead. The emergency key is also for locking/unlocking the glove compartment. You can keep the emergency key with you when valet parking.

To remove the emergency key, press the mechanical button on the side of the key fob with your thumb and pull the emergency key out with your other hand while pushing the mechanical button.

To Lock The Doors And Liftgate

Push and release the lock button on the key fob to lock all doors and liftgate. The hazard lights will flash once and the horn will chirp once to acknowledge the signal. Settings in radio can change to lights only, chirp only, or both.

Refer to "Keyless Enter-N-Go — Passive Entry" in "Getting To Know Your Vehicle" for further information.

Key Fob With Remote Control And Integrated Vehicle Key

If one or more doors are open or the liftgate is open, the doors can be locked. This is signaled by a quick flash of the turn signals.

Vehicles Equipped With Keyless Enter-N-Go — Passive Entry

If one or more doors are open, or the liftgate is open, the doors can be locked. The doors will unlock again only if the key is inside the passenger compartment.

Key Fob Battery Replacement

The recommended replacement battery is one CR2032 battery.

NOTE:

- Batteries contain harmful chemicals. Dispose old batteries by placing them in correct containers according to the law or by taking them to a dealership, where they will be handled appropriately.
- Perchlorate Material — special handling may apply. See www.dtsc.ca.gov/hazardouswaste/perchlorate
- Do not touch the battery terminals that are on the back housing or the printed circuit board.

1. Remove the emergency key by pushing the mechanical release button on the side of the key fob with your thumb and then pull the key out with your other hand.

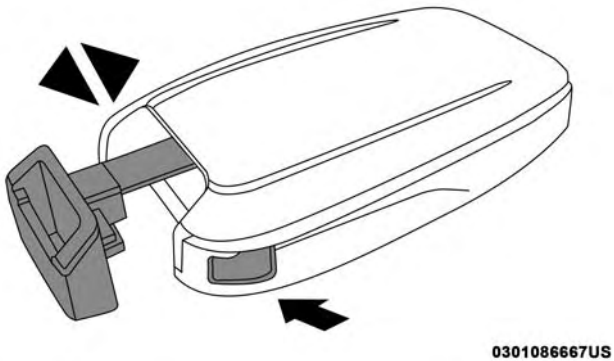

Emergency Key Removal

2. Insert a coin, a flat blade screw driver, or the tip of your emergency key into the now exposed slot and carefully pry on both sides to disengage the snaps. Gently remove the back cover from the fob being careful not to damage any of the snaps.

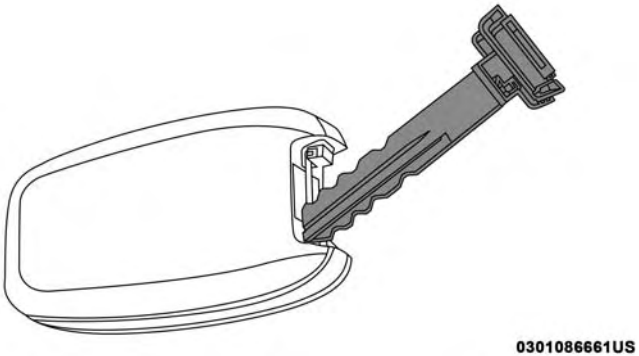

Separating The Key Fob Case

3. Remove the battery by sliding the battery rearward in its pocket until the battery lifts up. Remove the depleted battery from the battery pocket and dispose appropriately.

4. Fit a new CR2032 battery ensuring that the positive (+) side is facing upwards. Push the battery into the pocket until it is firmly seated in place and secured under both tabs.

5. Align the back cover into its original position and snap it back in place by pushing it against the fob until it is seated all around.

Programming Additional Key Fobs

Programming the key fob may be performed by an authorized dealer.

NOTE: Once a key fob is programmed to a vehicle, it cannot be repurposed and reprogrammed to another vehicle.

Request For Additional Remote Controls

NOTE: Only key fobs that are programmed to the vehicle electronics can be used to start and operate the vehicle. Once a key fob is programmed to a vehicle, it cannot be programmed to any other vehicle.

CAUTION!

- **Always remove the key fobs from the vehicle and lock all doors when leaving the vehicle unattended.**
- **For vehicles equipped with Keyless Enter-N-Go — Ignition, always remember to place the ignition in the OFF position.**

Duplication of key fobs may be performed at an authorized dealer. This procedure consists of programming a blank key fob to the vehicle electronics. A blank key fob is one that has never been programmed.

NOTE: When having the Sentry Key Immobilizer System serviced, bring all vehicle keys with you to an authorized dealer.

KeySense Features — If Equipped

This feature provides the vehicle owner with the ability to customize vehicle settings that can be applied to determine the driving experience for other drivers of the vehicle. The vehicle settings are protected by a unique 4-digit PIN, which the vehicle owner creates when accessing the specific settings for the first time.

This feature also has additional features that are always enabled when the specific key is in use that cannot be set by the vehicle owner. While this specific key fob is in use, the vehicle will respond accordingly to the customized vehicle settings and mandatory features. This includes enhanced driving assistance features, increased driver alerts, and the locking of certain optional features.

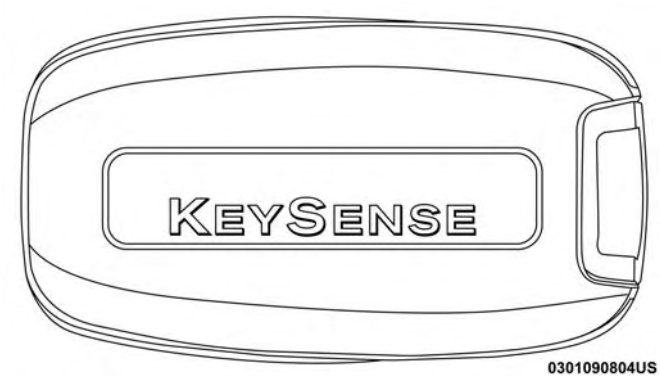

KeySense Key Fob

KeySense Unique Splash Screen

At start-up the KeySense splash screen should inform the driver that the vehicle will be functioning in KeySense mode when the KeySense key is in use.

Start Up Display Features

- Unique splash screen graphic
- Telltale illuminated
- After unique splash screen, and after stored messages are cycled, then start-up KeySense messages (Range & Max Speed) are displayed

The following features are always enabled when this key is in use:

- Entertainment Audio Muted if 1st row occupied Seat Belts are not Fastened
- Consistent Seat Belt Unfastened Chime
- Maximum Radio Volume limited to 15 out of 39
- Daytime Running Lights
- Headlights with Wipers
- Rain Sensing Auto Wipers
- Auto Dim High Beams

For additional information please refer to “Uconnect Settings” in “Multimedia” for further information.

General Information

The following regulatory statement applies to all radio frequency (RF) devices equipped in this vehicle:

This device complies with Part 15 of the FCC Rules and with Industry Canada license-exempt RSS standard(s). Operation is subject to the following two conditions:

1. This device may not cause harmful interference, and

2. This device must accept any interference received, including interference that may cause undesired operation.

NOTE: Changes or modifications not expressly approved by the party responsible for compliance could void the user's authority to operate the equipment.

IGNITION SWITCH

Keyless Enter-N-Go — Ignition

This feature allows the driver to start the vehicle with the push of a button, as long as the key fob is in the passenger compartment, and the drivers foot on the brake pedal.

The Keyless Push Button Ignition has four operating positions; three of which are labeled and will illuminate when in position. The three positions are OFF, ACC, and ON/RUN. The fourth position is START, during start RUN will illuminate.

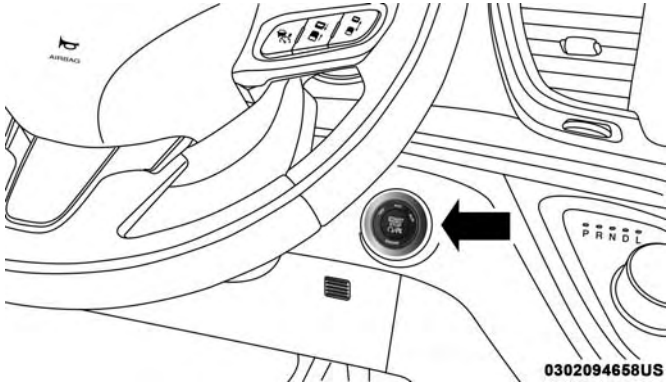

Keyless Push Button Ignition

The ignition can be placed in the following positions:

OFF

- The engine is stopped.
- Some electrical devices are available.

ACC

- The engine is stopped.
- Some electrical devices are available.

ON/RUN

- Driving position.
- All the electrical devices are available.

START

- Start the vehicle.

The engine only runs in the ON/RUN ignition position or from a remote start request.

In case the ignition switch does not change with the push of a button, the key fob may have a low or dead battery. In this situation, a back up method can be used to operate the ignition switch. Put the nose side (side opposite of the emergency key) of the key fob against the ENGINE START/STOP button and push to operate the ignition switch.

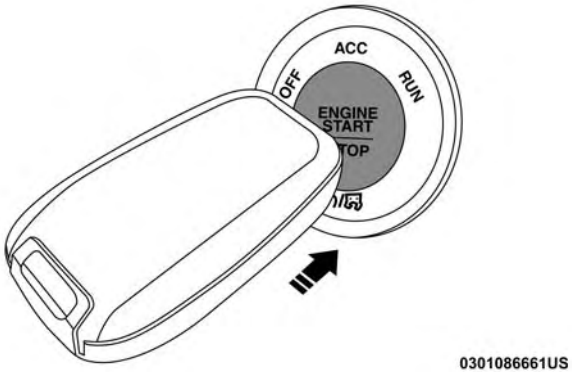

Backup Starting Method

NOTE: The key fob may not be able to be detected by the vehicle keyless-go system if it is located next to a mobile phone, laptop or other electronic device; these devices may block the key fob's wireless signal and prevent the keyless-go system from starting the vehicle.

WARNING!

- **When leaving the vehicle, always remove the key fob from the vehicle and lock your vehicle.**
- **Never leave children alone in a vehicle, or with access to an unlocked vehicle.**

(Continued)

WARNING! *(Continued)*

- **Allowing children to be in a vehicle unattended is dangerous for a number of reasons. A child or others could be seriously or fatally injured. Children should be warned not to touch the parking brake, brake pedal or the gear selector.**
- **Do not leave the key fob in or near the vehicle, or in a location accessible to children, and do not leave the ignition of a vehicle equipped with Keyless Enter-N-Go in the RUN mode. A child could operate power windows, other controls, or move the vehicle.**
- **Do not leave children or animals inside parked vehicles in hot weather. Interior heat build-up may cause serious injury or death.**

CAUTION!

An unlocked car is an invitation. Always remove the key fobs from the vehicle and lock all doors when leaving the vehicle unattended.

NOTE: For further information, refer to "Starting The Engine" in "Starting And Operating."

REMOTE STARTING SYSTEM — IF EQUIPPED

This system uses the key fob to start the engine conveniently from outside the vehicle while still maintaining security. The system has a range of 328 ft (100 m).

The Remote Starting System also activates the Climate Control, vented seats (if equipped) in temperatures above 80° F (26.7° C), and the optional heated seats, and optional heated steering wheel in temperatures below 40° F (4.4° C).

NOTE:

- The vehicle must be equipped with an automatic transmission to be equipped with Remote Start.
- Obstructions between the vehicle and key fob may reduce this range.

How To Use Remote Start

- Push Remote Start button on the key fob twice within five seconds. Pushing the Remote Start button a third time shuts the engine off.
- To drive the vehicle, push unlock button, and place the ignition in the ON/RUN position.

- With remote start, the engine will only run for 15 minutes (timeout) unless the ignition key is placed in the ON/RUN position.
- The vehicle must be started with the key after two consecutive timeouts.

All of the following conditions must be met before the engine will remote start:

- Gear Selector in PARK
- Doors closed
- Hood closed
- Liftgate closed
- Hazard switch off
- Brake switch inactive (brake pedal not pushed)
- Battery at an acceptable charge level
- PANIC button not pushed
- System not disabled from previous remote start event
- Vehicle alarm system indicator flashing
- Ignition in STOP/OFF position
- Fuel level meets minimum requirement

WARNING!

- **Do not start or run an engine in a closed garage or confined area. Exhaust gas contains Carbon Monoxide (CO) which is odorless and colorless. Carbon Monoxide is poisonous and can cause serious injury or death when inhaled.**
- **Keep key fobs away from children. Operation of the Remote Start System, windows, door locks or other controls could cause serious injury or death.**

Remote Start Cancel Message — If Equipped

The following messages will display in the instrument cluster if the vehicle fails to remote start or exits remote start prematurely:

- Remote Start Cancelled — Door Open
- Remote Start Cancelled — Hood Open
- Remote Start Cancelled — Fuel Low
- Remote Start Cancelled — Liftgate Open
- Remote Start Cancelled — Too Cold
- Remote Start Cancelled — Time Expired
- Remote Start Disabled — Start Vehicle To Reset

The message will stay active until the ignition is placed in the ON/RUN position.

To Enter Remote Start Mode

Push and release the Remote Start button on the key fob twice within five seconds. The vehicle doors will lock, the turn signals will flash twice, and the horn will chirp twice. Then the engine will start, and the vehicle will remain in the Remote Start mode for a 15-minute cycle.

NOTE:

- If an engine fault is present or fuel level is low, the vehicle will start and then shut down in 10 seconds.
- The park lamps will turn on and remain on during Remote Start mode.
- For security, power window operation is disabled when the vehicle is in the Remote Start mode.
- The engine can be started two consecutive times (two 15-minute cycles) with the key fob. However, the ignition must be placed in the ON/RUN position before you can repeat the start sequence for a third cycle.

To Exit Remote Start Mode Without Driving The Vehicle

Push and release the Remote Start button one time or allow the remote start cycle to complete the entire 15-minute cycle.

NOTE: To avoid unintentional shutdowns, the system will disable the one time push of the Remote Start button for two seconds after receiving a valid Remote Start request.

To Exit Remote Start Mode And Drive The Vehicle

Before the end of 15-minute cycle, push and release the unlock button on the key fob to unlock the doors, or unlock the vehicle using Keyless Enter-N-Go — Passive Entry via the door handles, and disarm the vehicle security alarm (if equipped). Then, prior to the end of the 15-minute cycle, push and release the START/STOP button.

NOTE: For vehicles equipped with the Keyless Enter-N-Go — Passive Entry feature, the message “Remote Start Active — Push Start Button” will display in the instrument cluster display until you push the ignition START button.

Remote Start Comfort Systems — If Equipped

When Remote Start is activated, the Climate Control, vented seats (if equipped) are also activated in temperatures above 80° F (26.7° C), and the optional heated seats, and optional heated steering wheel in temperatures below 40° F (4.4° C). These features will stay on through the duration of Remote Start or until the ignition switch is cycled to the ON/RUN position.

General Information

The following regulatory statement applies to all radio frequency (RF) devices equipped in this vehicle:

This device complies with Part 15 of the FCC Rules and with Industry Canada license-exempt RSS standard(s). Operation is subject to the following two conditions:

1. This device may not cause harmful interference, and
2. This device must accept any interference received, including interference that may cause undesired operation.

NOTE: Changes or modifications not expressly approved by the party responsible for compliance could void the user's authority to operate the equipment.

SENTRY KEY

The Sentry Key Immobilizer system prevents unauthorized vehicle operation by disabling the engine. The system does not need to be armed or activated. Operation is automatic, regardless of whether the vehicle is locked or unlocked.

The system uses a key fob, keyless push button ignition and a RF receiver to prevent unauthorized vehicle operation. Therefore, only key fobs that are programmed to the vehicle can be used to start and operate the vehicle. The system cannot reprogram a key fob obtained from another vehicle.

After turning the ignition switch to the ON/RUN position, the vehicle security light will turn on for three seconds for a bulb check. If the light remains on after the bulb check, it indicates that there is a problem with the electronics. In addition, if the light begins to flash after the bulb check, it indicates that someone attempted to start the engine with an invalid key fob. In the event that a valid key fob is used to start the engine but there is an issue with the vehicle electronics, the engine will start and shut off after two seconds.

If the vehicle security light turns on during normal vehicle operation (vehicle running for longer than ten seconds), it indicates that there is a fault in the electronics. Should this

occur, have the vehicle serviced as soon as possible by an authorized dealer.

CAUTION!

The Sentry Key Immobilizer system is not compatible with some aftermarket remote starting systems. Use of these systems may result in vehicle starting problems and loss of security protection.

All of the key fobs provided with your new vehicle have been programmed to the vehicle electronics.

Key Programming

Key fob programming is performed at an authorized dealer.

Replacement Keys

NOTE: Only key fobs that are programmed to the vehicle electronics can be used to start and operate the vehicle. Once a key fob is programmed to a vehicle, it cannot be programmed to any other vehicle.

CAUTION!

Always remove the key fobs from the vehicle and lock all doors when leaving the vehicle unattended.

NOTE: Duplication of key fobs may be performed at an authorized dealer. This procedure consists of programming a blank key fob to the vehicle electronics. A blank key fob is one that has never been programmed.

When having the Sentry Key Immobilizer System serviced, bring all vehicle keys with you to an authorized dealer.

General Information

The following regulatory statement applies to all radio frequency (RF) devices equipped in this vehicle:

This device complies with Part 15 of the FCC Rules and with Industry Canada license-exempt RSS standard(s). Operation is subject to the following two conditions:

1. This device may not cause harmful interference, and
2. This device must accept any interference received, including interference that may cause undesired operation.

NOTE: Changes or modifications not expressly approved by the party responsible for compliance could void the user's authority to operate the equipment.

VEHICLE SECURITY ALARM — IF EQUIPPED

The vehicle security alarm monitors the vehicle doors for unauthorized entry and the ignition switch for unauthorized operation. When the alarm is activated, the interior switches for door locks, power sliding doors and power liftgate are disabled. The vehicle security alarm provides both audible and visible signals. If something triggers the alarm, the vehicle security alarm will provide the following audible and visible signals: the horn will pulse, the park lamps and/or turn signals will flash, and the vehicle security light in the instrument cluster will flash.

To Arm The System

Follow these steps to arm the vehicle security alarm:

1. Make sure the vehicles ignition is cycled to the "OFF" position (refer to "Starting The Engine" in "Starting And Operating" for further information).
   - For vehicles equipped with Keyless Enter-N-Go — Passive Entry, make sure the vehicle ignition system is OFF.
2. Perform one of the following methods to lock the vehicle:
   - Push lock on the interior power door lock switch with the driver and/or passenger door open.
   - Push the lock button on the exterior Passive Entry Door Handle with a valid key fob available in the same exterior zone (refer to "Keyless Enter-N-Go — Passive Entry" in "Getting To Know Your Vehicle" for further information).
   - Push the lock button on the key fob.
3. If any doors are open, close them.

To Disarm The System

The vehicle security alarm can be disarmed using any of the following methods:

- Push the unlock button on the key fob.
- Grasp the Passive Entry Unlock Door Handle (if equipped, refer to "Keyless Enter-N-Go — Passive Entry" under "Getting To Know Your Vehicle" for further information).
- Hands Free Liftgate passive entry activation (if equipped with Hands Free Liftgate passive entry).

- Cycle the vehicle ignition system out of the OFF position.
  - For vehicles equipped with Keyless Enter-N-Go — Passive Entry, push the keyless ignition START/STOP button (requires at least one valid key fob in the vehicle).

NOTE:

- The driver's door key cylinder and the liftgate button on the key fob cannot arm or disarm the vehicle security alarm.
- The vehicle security alarm remains armed during power liftgate entry. Pushing the liftgate button will not disarm the vehicle security alarm. If someone enters the vehicle through the liftgate and opens any door, the alarm will sound.
- When the vehicle security alarm is armed, the interior power door lock switches will not unlock the doors.

The vehicle security alarm is designed to protect your vehicle. However, you can create conditions where the system will give you a false alarm. If one of the previously described arming sequences has occurred, the vehicle security alarm will arm regardless of whether you are in the vehicle or not. If you remain in the vehicle and open a door, the alarm will sound. If this occurs, disarm the vehicle security alarm.

If the vehicle security alarm is armed and the battery becomes disconnected, the vehicle security alarm will remain armed when the battery is reconnected; the exterior lights will flash, and the horn will sound. If this occurs, disarm the vehicle security alarm.

Rearming Of The System

If something triggers the alarm, and no action is taken to disarm it, the vehicle security alarm will turn the horn off after 29 seconds, 5 seconds between cycles, up to 8 cycles if the trigger remains active and then the vehicle security alarm will rearm itself.

DOORS

Manual Lock

To lock each door, rotate the door lock knob on each door trim panel forward. To unlock the front doors, pull the inside door handle to the first detent or rotate the door lock button until the ribbing is visible. To unlock the rear doors, rotate the door lock button until the red indicator is visible.

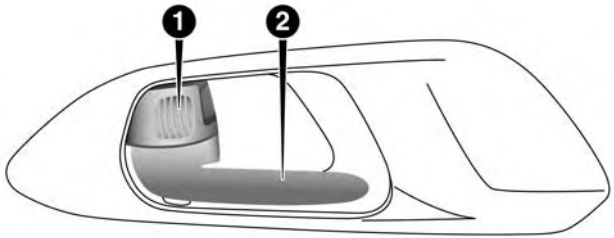

0305110337US

Manual Front Door Lock Location

1 — Manual Door Lock
2 — Door Handle

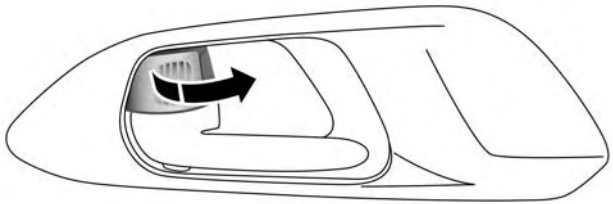

0305110338US

Manual Door Lock Rocker Switch

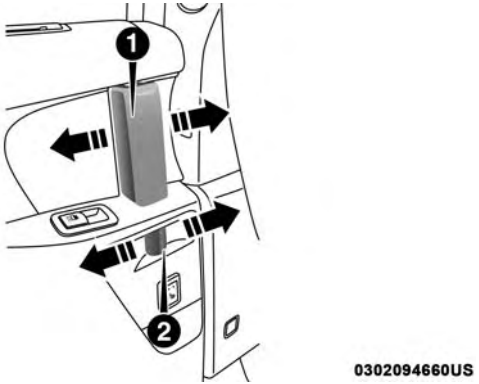

Manual Rear Door Lock Location

1 — Door Handle
2 — Manual Door Lock

If the door lock button is locked (no ribbing is visible) when you shut the door, the door will lock. Therefore, make sure the key fob is not inside the vehicle before closing the door.

NOTE: The manual door locks will not lock or unlock the liftgate.

WARNING!

- **For personal security and safety in the event of a collision, lock the vehicle doors before you drive as well as when you park and leave the vehicle.**
- **Never use the PARK position as a substitute for the parking brake. Always apply the parking brake fully when parked to guard against vehicle movement and possible injury or damage.**
- **When exiting the vehicle, always make sure the keyless ignition node is in the "OFF" mode, remove the key fob from the vehicle and lock the vehicle.**
- **Never leave children alone in a vehicle, or with access to an unlocked vehicle. Allowing children to be in a vehicle unattended is dangerous for a number of reasons. A child or others could be seriously or fatally injured. Children should be warned not to touch the parking brake, brake pedal or the gear selector.**
- **Do not leave the key fob in or near the vehicle, or in a location accessible to children, and do not leave the ignition of a vehicle equipped with Keyless Enter-N-Go in the ACC or ON/RUN mode. A child could operate power windows, other controls, or move the vehicle.**

Central Lock/Unlock — If Equipped

A power door lock switch is on each front door trim panel. Use this switch to lock or unlock the doors.

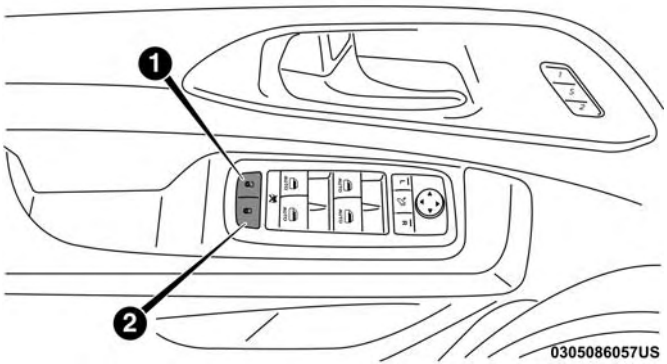

Driver Power Door Lock Switches

1 — Power Unlock Switch
2 — Power Lock Switch

If you push the power door lock switch while the ignition is in the ACC or ON/RUN position, and any front door is open, the power locks will not operate. This prevents you from accidentally locking your keys in the vehicle. Placing the ignition in the OFF position or closing the door will allow the locks to operate. A chime will sound if the ignition is in the ACC or ON/RUN position and a door is open, as a reminder to place the ignition in the OFF position and remove the key fob.

Unlock Doors Automatically On Exit — If Equipped

The Unlock Doors Automatically On Exit feature unlocks all of the vehicle doors when any door is opened. This will occur only after the gear selector has been placed into the PARK position, after the vehicle has been driven (the gear selector has been placed out of PARK and all doors closed).

The Unlock Doors Automatically On Exit feature will not operate if there is any manual operation of the door locks (lock or unlock).

For further information, refer to “Uconnect Settings” in “Multimedia”.

Keyless Enter-N-Go — Passive Entry

The Passive Entry system is an enhancement to the vehicle’s Remote Keyless Entry system and a feature of Keyless Enter-N-Go. This feature allows you to lock and unlock the vehicle’s door(s) without having to push the key fob lock or unlock buttons.

NOTE:

- Passive Entry may be programmed ON/OFF. Refer to "Uconnect Settings" in "Multimedia" for further information.
- If wearing gloves on your hands, or if it has been raining/snowing on the Passive Entry door handle, the unlock sensitivity can be affected, resulting in a slower response time.
- If the vehicle is unlocked by Passive Entry and no door is opened within 60 seconds, the vehicle will re-lock and if equipped will arm the security alarm.
- The sliding side doors can be unlocked from the outside using the hands free or Passive Entry system.
- The key fob may not be able to be detected by the vehicle passive entry system if it is located next to a mobile phone, laptop, wireless charging pad, or other electronic device; these devices may block the key fob's wireless signal and prevent the passive entry handle from locking/unlocking the vehicle.
- If set by the customer in the Uconnect Settings, unlocking with Passive Entry will initiate illuminated approach (low beams, license plate lamp, position lamps) for the time 0, 30(default), 60 or 90 seconds. Passive Entry also initiates two flashes of the turn lamps.

To Unlock From The Driver's Side:

With a valid key fob within 5 ft (1.5 m) of the driver's door handle, grab the driver's front door handle to unlock the drivers side doors (driver/sliding door) automatically. The interior door panel rocker knob will rotate when the door is unlocked.

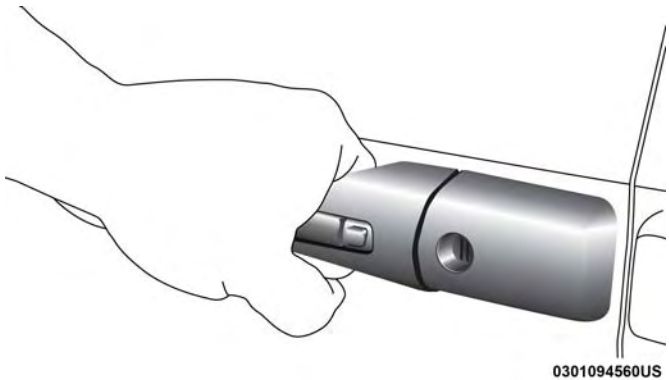

Grab The Door Handle To Unlock

NOTE: If "Unlock All Doors 1st Press" is programmed, all doors and liftgate will unlock when you grab hold of the driver's front door handle. To select between "Unlock Driver Door 1st Press" and "Unlock All Doors 1st Press," refer to "Uconnect Settings" in "Multimedia" for further information.

To Unlock From The Passenger Side:

With a valid key fob within 5 ft (1.5 m) of the passenger door handle, grab the front passenger door handle to unlock all four doors and the liftgate automatically. The interior door panel lock knob will rotate when the door is unlocked.

NOTE: All doors will unlock when the front passenger door handle is grabbed regardless of the driver's door unlock preference setting ("Unlock Driver Door 1st Press" or "Unlock All Doors 1st Press").

Preventing Inadvertent Locking Of Key Fob In Vehicle (FOBIK-Safe)

To minimize the possibility of unintentionally locking a key fob inside your vehicle, the Passive Entry system is equipped with an automatic door unlock feature.

FOBIK-Safe only executes in vehicles with Passive Entry. There are three situations that trigger a FOBIK-Safe search in any Passive Entry vehicle:

- A lock request is made by a valid key fob while a door is open.
- A lock request is made by the Passive Entry door handle while a door is open.
- A lock request is made by the door panel switch while the door is open.

When any of these situations occur, after all open doors are shut, the FOBIK-Safe search will be executed. If it finds a key fob inside the car, and it does not find any key fob outside the car, then the car will unlock and alert the customer.

NOTE: The vehicle will only unlock the doors when a valid key fob is detected inside the vehicle, and no valid key fob is detected outside the vehicle. The vehicle will not unlock the doors when any of the following conditions are met:

- The doors are manually locked using the door lock knobs.
- There is a valid key fob outside the vehicle and within 5 ft (1.5 m) of either Passive Entry door handle.

- Three attempts are made to lock the doors using the door panel switch and then close the doors.

NOTE: On the third attempt ALL doors will lock and the key fob can be locked in the vehicle.

To Enter The Liftgate

With a valid key fob within 5 ft (1.5 m) of the liftgate, cycle the handle to open the liftgate and pull the liftgate open with one fluid motion.

NOTE: If "Unlock Driver Door 1st Press" is programmed, only the liftgate will unlock when the liftgate release handle is pulled. If "Unlock All Doors 1st Press" is programmed, all doors and the liftgate will unlock when the liftgate release handle is pulled. To select between "Unlock Driver Door 1st Press" and "Unlock All Doors 1st Press," refer to "Uconnect Settings" in "Multimedia" for further information.

To Lock The Vehicle's Doors

With one of the vehicle's key fobs within 5 ft (1.5 m) of the driver or passenger front door handle, push the door handle lock button to lock all four doors and the liftgate.

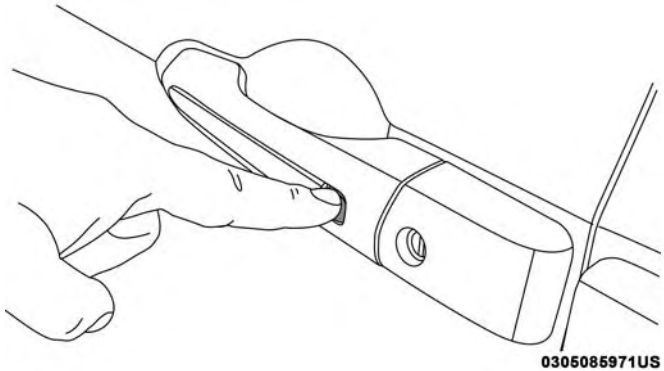

Push The Door Handle Button To Lock

Do NOT grab the door handle, when pushing the door handle button. This could unlock the door(s).

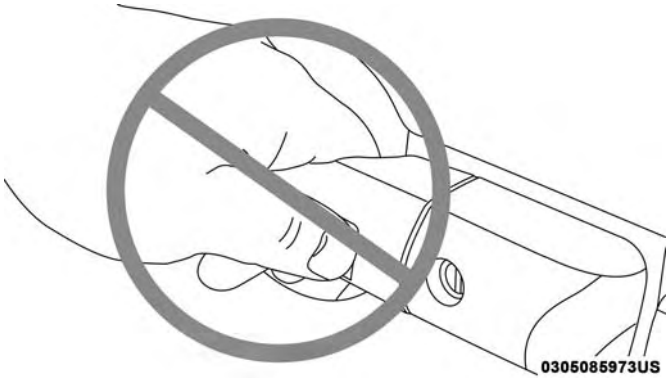

Do NOT Grab The Door Handle When Locking

NOTE:

- After pushing the door handle button, you must wait two seconds before you can lock or unlock the doors, using either Passive Entry door handle. This is done to allow you to check if the vehicle is locked by pulling the door handle, without the vehicle reacting and unlocking.
- The Passive Entry system will not operate if the key fob battery is dead.

The vehicle doors can also be locked by using the key fob lock button, or the lock button located on the vehicle's interior door panel.

General Information

The following regulatory statement applies to all radio frequency (RF) devices equipped in this vehicle:

This device complies with Part 15 of the FCC Rules and with Industry Canada license-exempt RSS standard(s). Operation is subject to the following two conditions:

1. This device may not cause harmful interference, and
2. This device must accept any interference received, including interference that may cause undesired operation.

NOTE: Changes or modifications not expressly approved by the party responsible for compliance could void the user's authority to operate the equipment.

Manual Sliding Side Door

The sliding door may be opened from the inside or the outside. Pull outward on the exterior handle to open the sliding door. The sliding door inside handle functions by rocking forward and back. Rocking the handle backwards

opens the door and rocking forward releases the hold open latch in order to close the door.

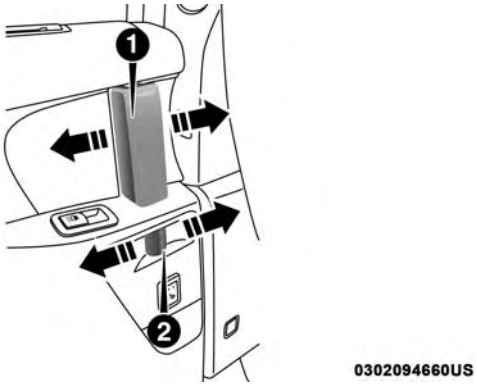

Side Door Handle And Lock Functions

1 — Door Handle
2 — Door Lock

To keep your door operating properly, observe the following guidelines:

- Always open the door smoothly.
- Avoid high impacts against the door stop when opening the door. This is very important when your vehicle is parked on an incline as the door will slide faster in the downhill direction.
- There is a hold-open latch that is activated when the sliding door is fully opened. This latch will keep your sliding door open on any incline. To close the sliding door after the hold-open latch is activated, you must rock the inside handle forward or pull outward on the exterior handle.

Always make sure that the sliding door is fully latched anytime the vehicle is in motion.

NOTE: The left side sliding door cannot be opened while the fuel door is open.

Power Sliding Side Door — If Equipped

The power sliding door may be power opened or closed in several ways:

- Key fob
- Inside or outside handles
- Buttons located:
  - In the overhead console
  - Just inside the sliding door
  - On the outside handle

Push the button on the key fob twice within five seconds to open, close, or reverse a power sliding door.

The key fob and the overhead console button will operate the door when the door is locked. All other ways require the sliding door to be unlocked. If the vehicle is equipped with Passive Entry, pressing the button on the outside handle or Hands-Free feature (if equipped) will unlock and open the sliding door, with a valid Passive Entry key fob within 5 ft (1.5 m) of the door handle.

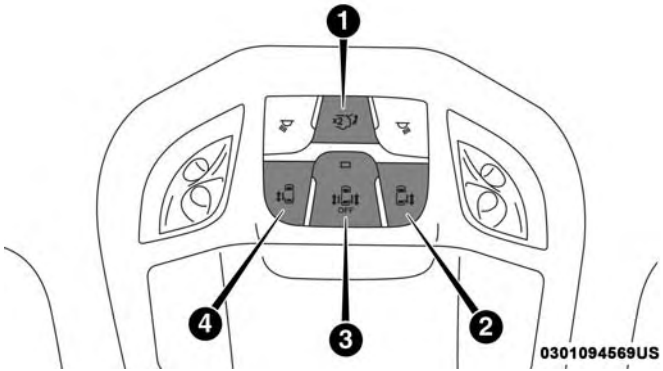

Overhead Console Power Switches

1 — Liftgate
2 — Right Sliding Door
3 — Sliding Door Power Off
4 — Left Sliding Door

There are power sliding side door switches located on the B-Pillar trim panel, just in front of the power sliding door for the rear seat passengers.

To operate the sliding door manually with the handles or to avoid unintentional operation of the power sliding doors from the rear seats, push the power sliding door power off button, located in the overhead console, to remove power to the handles and buttons just inside the sliding doors. The power off LED, in the overhead console, will be lit when the handles are manual. When the LED is lit, pushing the power sliding door power off button will return the handles to power operation.

NOTE:

- If anything obstructs the power sliding side door while it is closing or opening, the door will automatically reverse to the closed or open position and an audible tone will sound, provided it meets sufficient resistance. The turn signals will flash with sliding door movements.
- If the power sliding door stops in the middle due to obstacles, it will power open on the next command.

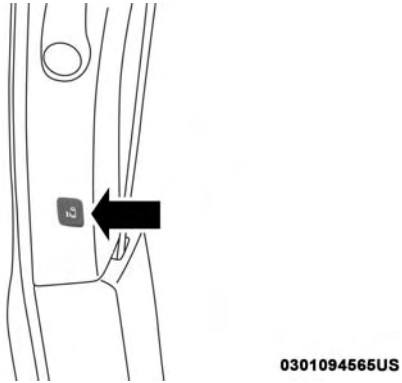

Driver Side Power Sliding Side Door Switch

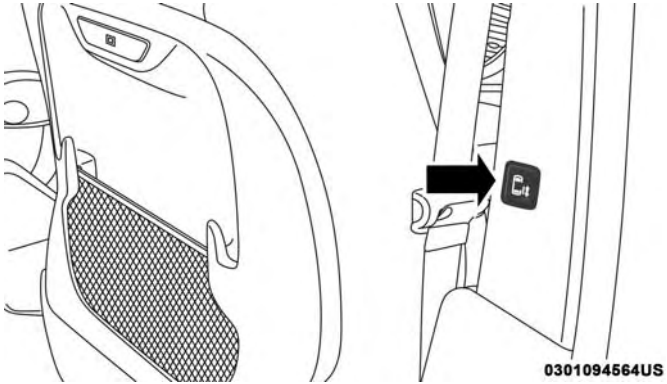

Passenger Side Power Sliding Side Door Switch

WARNING!

Personal injury or cargo damage may occur if caught in the path of the sliding door. Make sure the door path is clear before closing the door.

WARNING!

Before driving off, check the instrument cluster for a sliding door or door open message or warning indicator. Failure to do this could result in unintentionally leaving the sliding door open while driving.

Hands-Free Sliding Doors — If Equipped

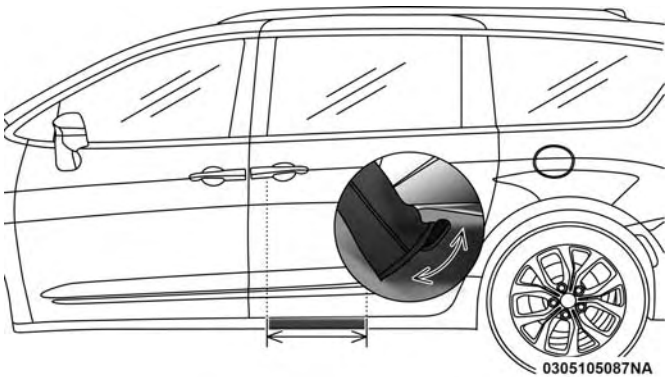

Hands-Free Sliding Doors

To open the Hands-Free Sliding Doors, use a straight in and out kicking motion under the vehicle in the general

location below the door handle(s). Do not move your foot sideways or in a sweeping motion or the sensors may not detect the motion.

When a valid kicking motion is completed, the sliding door will chime, the hazard lights will flash and the sliding door will open almost instantaneously. This assumes all options are enabled in the radio settings.

NOTE:

- To open the Hands-Free Sliding Doors requires a valid Passive Entry key fob within 5 ft (1.5 m) of the door handle. If a valid Passive Entry key fob is not within 5 ft (1.5 m), the door will not respond to any kicks.
- The Hands-Free Sliding Door will only operate when the transmission is in PARK.
- With every movement of the Hands-Free sliding doors, an audible tone will sound and the turn signals will flash. Refer to "Uconnect Settings" in "Multimedia" in the Owner's Manual for further information on turning these alerts on or off.
- If anything obstructs the power sliding side door while it is closing or opening, the door will automatically reverse to the closed or open position and an audible tone will sound, provided it meets sufficient resistance. The turn signals will flash with sliding door movements.
- If the power sliding doors encounters multiple obstructions within the same cycle, the system will automatically stop.

The Hands-Free Sliding Doors feature may be turned off through Uconnect Settings. Refer to "Uconnect Settings" in "Multimedia" for further information. The Hands-Free Sliding Doors feature should be turned off during Jacking, Tire Changing, and Vehicle Service.

Child Locks

To provide a safer environment for small children riding in the rear seats, the sliding doors are equipped with a Child Protection Door Lock system.

To Engage The Child Protection Door Lock

1. Open the sliding side door.
2. On the rear of the sliding door, slide the Child Protection Door Lock control inward (toward the vehicle) to engage the Child Protection Door Lock.

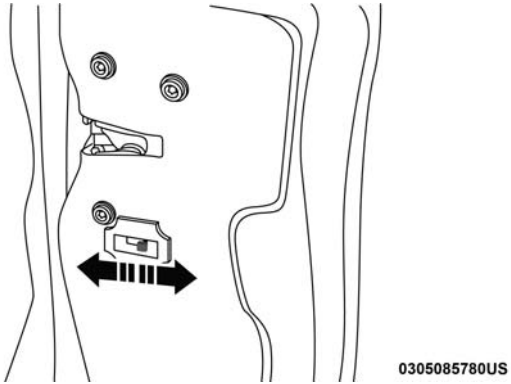

Child Protection Door Locks

3. Repeat Steps 1 and 2 on the opposite sliding door.

NOTE:

- After engaging (or disengaging) the Child Protection Door Lock, always test the inside door handle with the sliding door closed to make certain the Child Protection Door Lock is in the desired position. The inside door handle will not open the sliding door when the Child Protection Door Lock is engaged.
- The power sliding door will operate from the switch located just inside the sliding door, regardless of the Child Protection Door Lock lever position.
- **To avoid unintentional operation of the power sliding door from the rear seats, push the Sliding Door Power Off button, located in the overhead console.** When the overhead console power OFF LED is lit, the sliding door may not be power opened or closed by pushing the buttons just inside the sliding doors or pulling on the handles.

WARNING!

Avoid trapping anyone in the vehicle in a collision. Remember that the sliding doors cannot be opened from the inside door handle when the Child Protection Door Locks are engaged.

To Disengage The Child Protection Door Lock

1. Open the sliding side door.
2. Slide the Child Protection Door Lock control outward (away from the vehicle) to disengage the Child Protection Door Lock.

3. Repeat Steps 1 and 2 on the opposite sliding door.

NOTE:

- After disengaging (or engaging) the Child Protection Door Lock, always test the inside door handle with the sliding door closed to make certain the Child Protection Door Lock is in the desired position. The inside door handle will open the sliding door when the Child Protection Door Lock is disengaged.

SEATS

Seats are a part of the Occupant Restraint System of the vehicle.

WARNING!

- **It is dangerous to ride in a cargo area, inside or outside of a vehicle. In a collision, people riding in these areas are more likely to be seriously injured or killed.**
- **Do not allow people to ride in any area of your vehicle that is not equipped with seats and seat belts. In a collision, people riding in these areas are more likely to be seriously injured or killed.**

(Continued)

WARNING! ***(Continued)***

- **Be sure everyone in your vehicle is in a seat and using a seat belt properly.**

Manual Adjustment (Front Seats) — If Equipped

WARNING!

- **Adjusting a seat while the vehicle is moving is dangerous. The sudden movement of the seat could cause you to lose control. The seat belt might not be adjusted properly and you could be injured. Adjust the seat only while the vehicle is parked.**
- **Do not ride with the seatback reclined so that the shoulder belt is no longer resting against your chest. In a collision you could slide under the seat belt and be seriously or even fatally injured. Use the recliner only when the vehicle is parked.**

Manual Front Adjuster

Both front seats are adjustable forward or rearward. The manual seat adjustment handle is located under the seat cushion at the front edge of each seat.

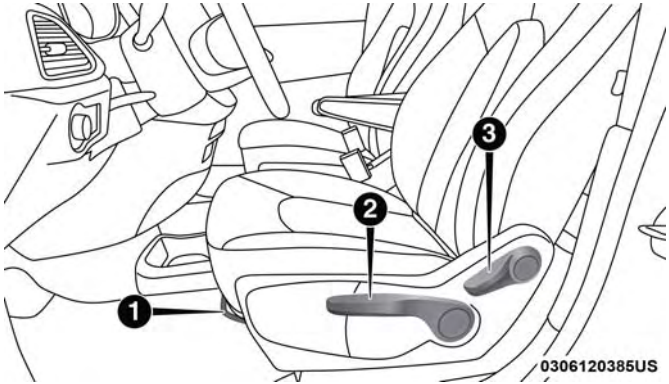

Manual Seat Adjustment

1 — Forward/Rearward Adjustment Handle
2 — Height Adjustment
3 — Recline Lever

While sitting in the seat, pull up on the handle and slide the seat forward or rearward. Release the bar once you have reached the desired position. Then, using body pressure, move forward and rearward on the seat to be sure that the seat adjusters have latched.

WARNING!

- **Adjusting a seat while driving may be dangerous. Moving a seat while driving could result in loss of control which could cause a collision and serious injury or death.**
- **Seats should be adjusted before fastening the seat belts and while the vehicle is parked. Serious injury or death could result from a poorly adjusted seat belt.**

Seat Height Adjustment

The driver's seat height can be raised or lowered by using a lever, located on the outboard side of the seat. Pump the lever upward to raise the seat height or pump the lever downward to lower the seat height.

Manual Reclining Seats — If Equipped

For models equipped with manual seats, the recline lever is located on the outboard side of the seat.

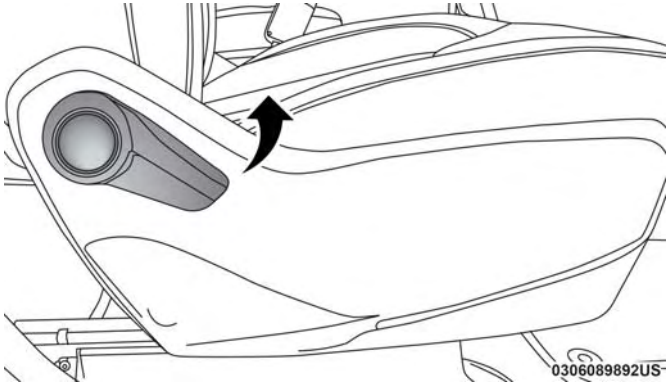

Manual Recline Lever

To recline, lean forward slightly, lift the lever and push back to the desired position and release the lever. Lean forward and lift the lever to return the seatback to its normal position. Using body pressure, lean forward and rearward on the seat to be sure the seatback has latched.

WARNING!

Do not ride with the seatback reclined so that the shoulder belt is no longer resting against your chest. In a collision you could slide under the seat belt, which could result in serious injury or death.

Manual Adjustment (Rear Seats)

WARNING!

- **Adjusting a seat while the vehicle is moving is dangerous. The sudden movement of the seat could cause you to lose control. The seat belt might not be adjusted properly and you could be injured. Adjust the seat only while the vehicle is parked.**
- **Do not ride with the seatback reclined so that the shoulder belt is no longer resting against your chest. In a collision you could slide under the seat belt and be seriously or even fatally injured. Use the recliner only when the vehicle is parked.**

Manual Recline — Quad Seats

To recline, lean forward slightly, lift the lever, and push back to the desired position and release the lever. Lean forward and lift the lever to return the seatback to its normal position. Using body pressure, lean forward and rearward on the seat to be sure the seatback has latched.

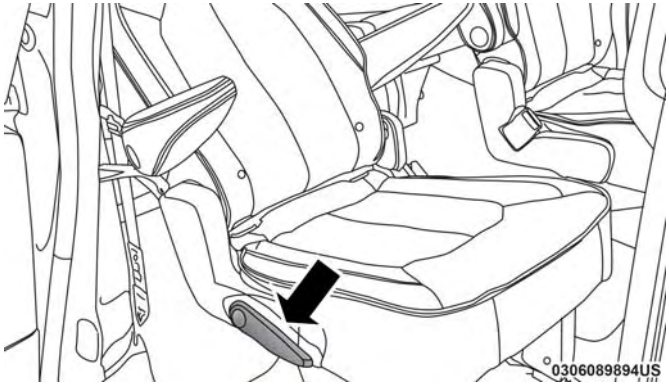

Recline Lever

WARNING!

Do not ride with the seatback reclined so that the shoulder belt is no longer resting against your chest. In a collision you could slide under the seat belt, which could result in serious injury or death.

Second Row Bench Seat — If Equipped

The second row bench seat can accommodate two passengers, while providing easy access to the third row seats without any folding of the second row seats.

To recline the seatback, lean forward slightly, lift the recline lever located on the outboard side of the seat cushion, and push back to the desired position and release the lever. Lean forward and lift the lever to return the seatback to its normal position. Using body pressure, lean forward and rearward on the seat to be sure the seatback has latched.

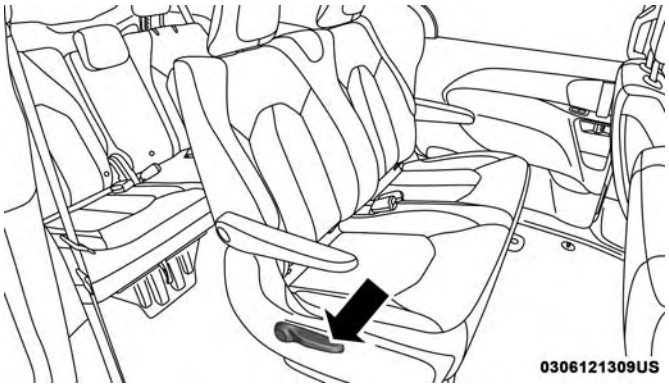

Recline Lever

The bench seat does not stow in the floor, but is removable for added cargo space.

Removing The Bench Seat

1. Adjust the driver and passenger seats forward to allow room for the bench seat removal.

2. Raise the armrest completely, then lift the recline lever located on the outboard side of the seat to fold the seatback flat against the seat cushion.

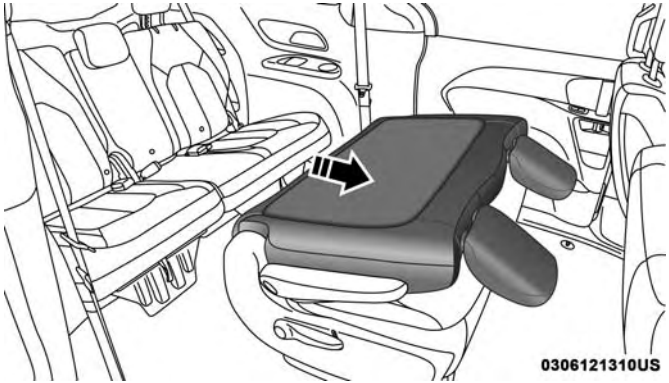

Folded Position

3. Pull the release strap located behind the seat, in the center near the floor to release the latches.

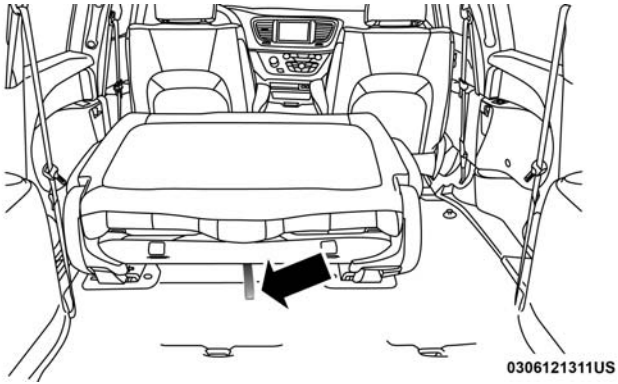

Release Strap Location

4. Once the latches are released, tilt the entire seat toward the front of the vehicle. The seat can now be removed through either sliding side door, or through the lift gate.

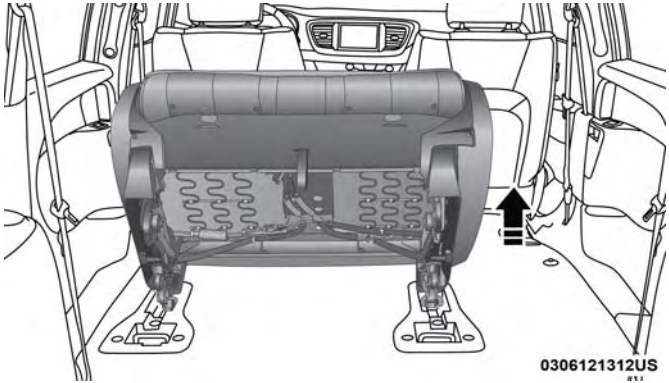

Tilt Bench Seat Forward

NOTE:

- Due to the weight of the bench seat, it is recommended that two people are utilized for its removal.
- When storing the removed bench seat, it is important to keep the seatback in the folded position.

Reinstalling The Bench Seat

1. To reinstall the bench seat, align the seats front attachments into the detent positions on the floor.
2. Tilt seat rearward to lock the seat back into its original position.

NOTE: Push downward to ensure the rear latches are in the locked position.

3. Lift the recline handle and return the seat back to the seating position.

WARNING!
If not properly latched, the seat could become loose. Personal injuries could result.

Second Row Removable 8th Seat — If Equipped

While the 8th seat does not stow in the floor, it is foldable and removable for added cargo space.

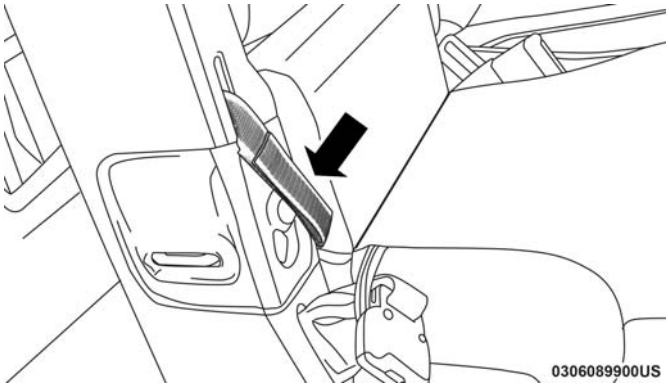

Second Row 8th Seat Fold Flat Strap

The release strap is located on the front of the seat, near the floor. To remove the seat, pull the release strap to release the rear latches. The seat assembly can now be removed from the vehicle by moving it in a rearward direction from the detent positions in the floor.

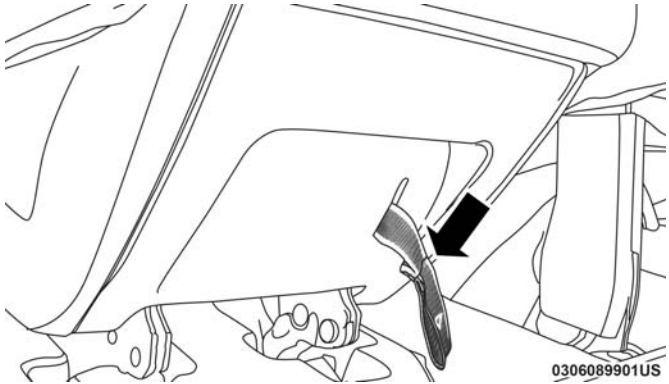

Release Strap

NOTE: Seat can be removed easier with one outboard seat stowed in the load floor.

To reinstall the seat, align the seat into the detent positions on the floor. Tilt seat rearward to lock the seat back into its original position.

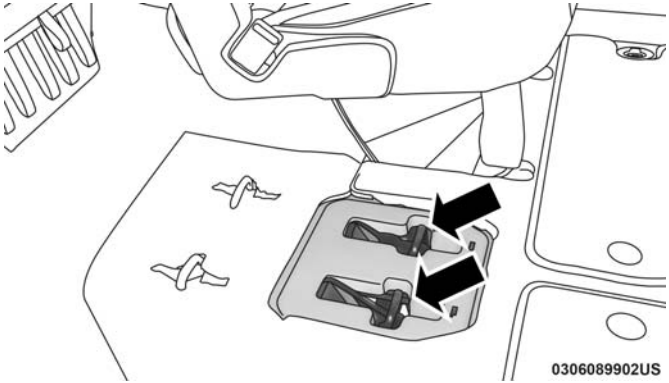

In Floor Detent Guides

WARNING!
If not properly latched, the seat could become loose. Personal injuries could result.

Fold-Flat — Quad Seats

To fold the seat, lift the recliner lever to the full upward position and push the seatback forward until it rests on the seat cushion.

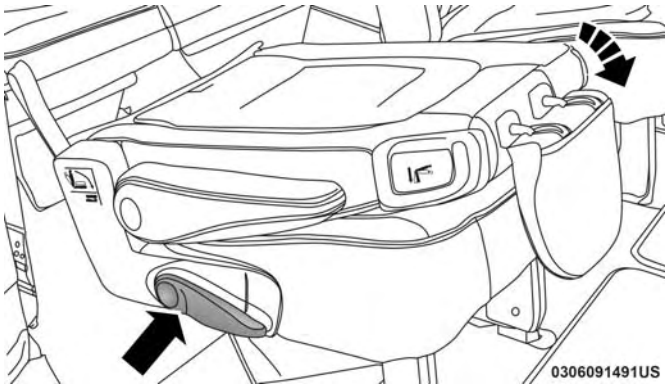

Fold-Flat Seat Recline Lever

NOTE:

- The seatback may lock into the fold flat position. Use the recline lever to unlock the seatback.
- When returning the seat to the original position, the headrest must be folded back to the original position.

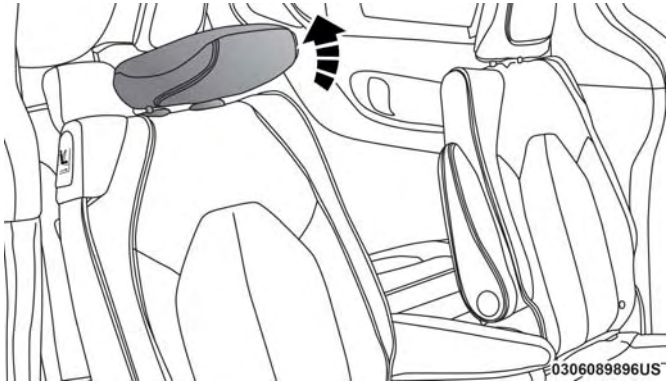

Fold Headrest To Upward Position

Easy Entry

Easy Tilt Seat — With Or Without Child Seat Installed

The second row seats can be tilted forward for easy entry into the third row with or without a child seat installed.

1. Located in the seatback of the second row seat is a handle that provides easier access to the third row by tilting the seat forward.

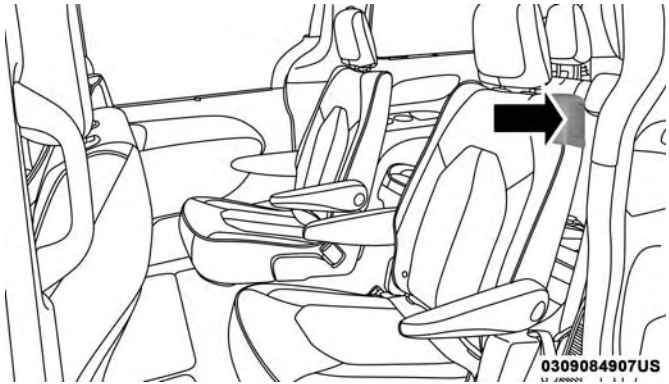

Easy Tilt Seat Handle

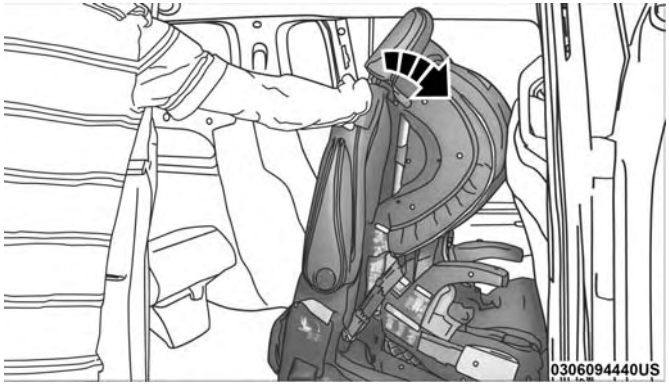

Seat Folded Forward With Child Seat Installed

2. To put the seat back into original position, just pull back on the seatback and lock the seat into position.

WARNING!
Do not use this feature with a child in seat. Serious injury or death my occur.

Easy Entry — With The Seat Folded Flat

The seats can be folded and tilted for more accessibility for passengers to enter and exit the third row.

1. Without a child seat installed, you can fold the seat by pulling the recliner handle on the bottom part of the seat. Before pulling the recliner lever, make sure the arm rests are folded up.

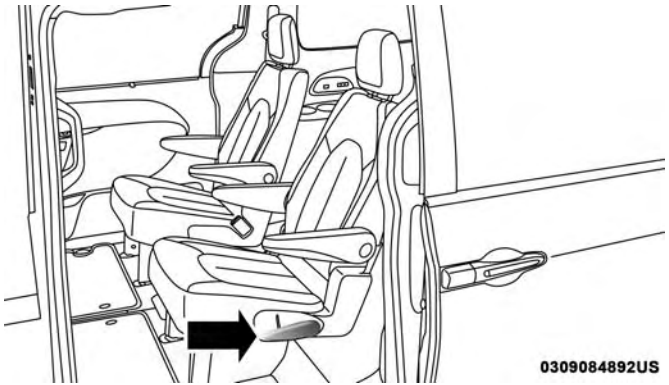

Recliner Lever

Pull the strap on the back of the seat and the seat will tilt forward.

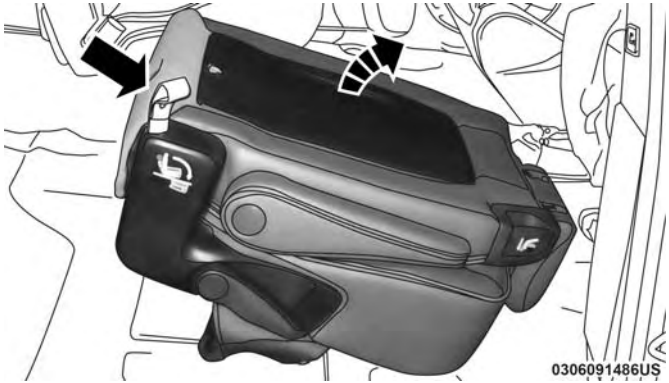

Pull Strap

2. To put it back into position, pull back on the folded seat and make sure that it locks into position. Then, pull the seatback toward the back and fold down the arm rests.

Exit For Third Row Passengers

For passengers seated in the third row, there is a pull strap located on the outboard side of the seat near the bottom of the seat back. Third row passengers can pull on the strap and push the seat forward for folding the seatback down and tilting the seat to the floor.

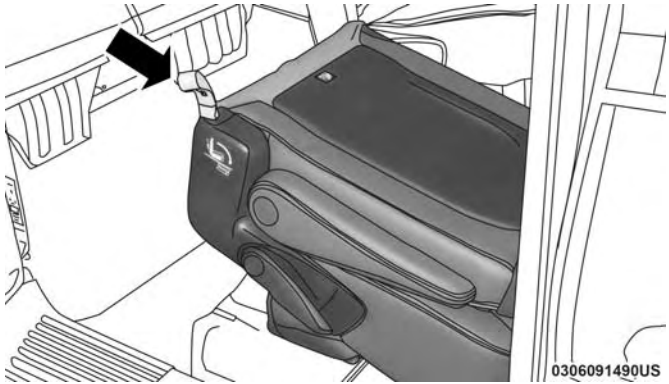

Pull Strap For Third Row Passengers

NOTE: This process is for when there is no child seat installed. Use the easy entry lever if a child seat is installed.

Manually Folding Third Row Seats — If Equipped

1. Lower the center head restraint down to the seatback by pushing the button on the guide and pushing the head restraint down.
2. Pull release strap marked "1" to release the anchors.

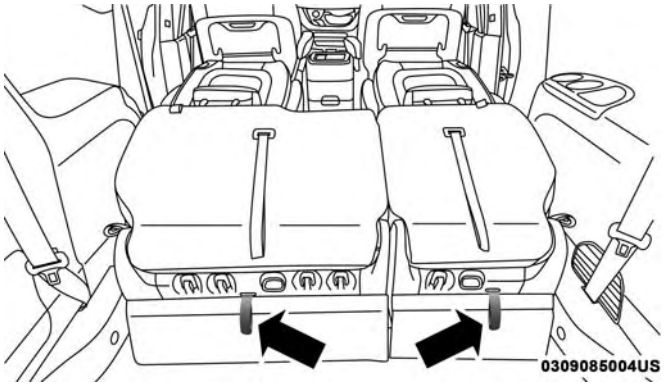

Release Strap "1"

3. Pull release strap marked "2" and tumble the seat rearward into the storage bin.

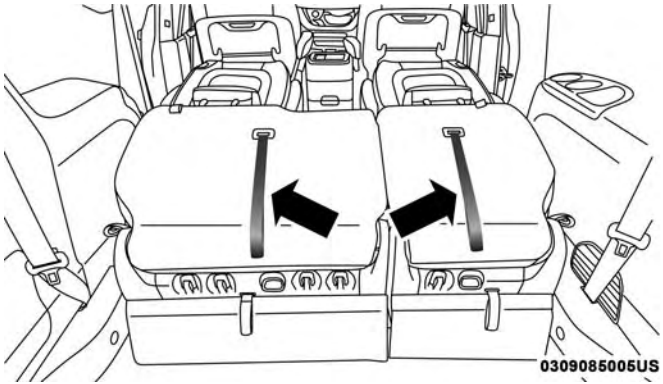

Strap "2"

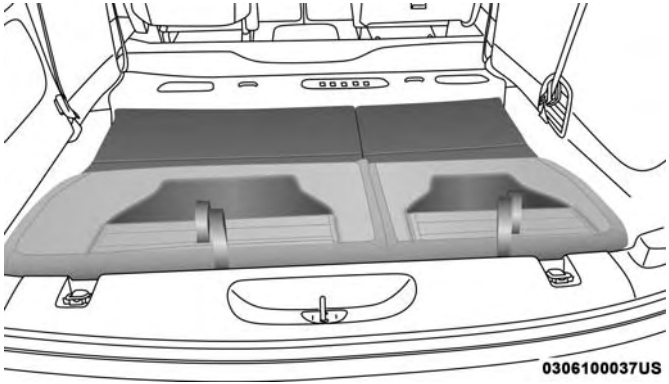

Stowed Third Row Seat

To Unfold Third Row Seats

1. Pull up on the assist strap to lift the seat out of the storage bin and push the seat forward until the anchors latch.

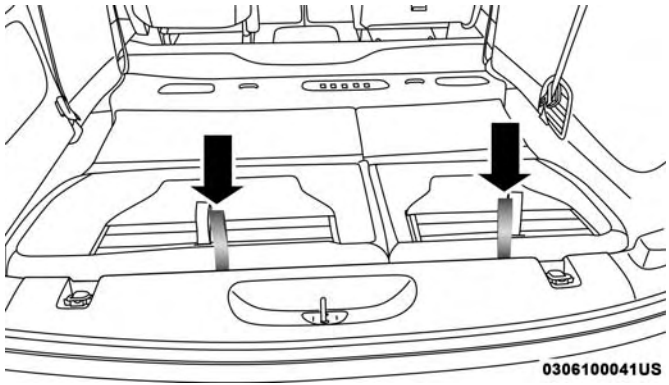

Assist Straps

2. Pulling strap "2" releases the seatback to return to its full upright position.

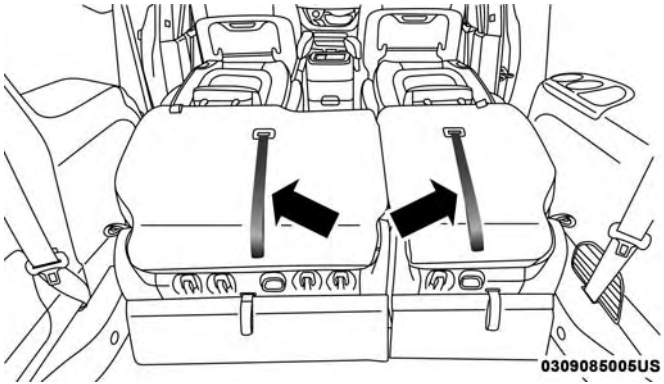

Strap "2"

3. Raise the head restraint to its upright position.

WARNING!

- **In a collision, you or others in your vehicle could be injured if seats are not properly latched to their floor attachments. Always be sure the seats are fully latched.**

(Continued)

WARNING! *(Continued)*

- **Sitting in a seat with the head restraint in its lowered position could result in serious injury or death in a collision. Always make sure the head restraints are in their upright positions when the seat is to be occupied.**

Stow 'n Go Seating

On vehicles equipped with Stow 'n Go seating, the second and third row seats can be folded into the floor for convenient storage.

Auto Advance 'n Return — If Equipped

On vehicles equipped with the Auto Advance 'n Return feature, the front seat will move forward automatically to a location that will allow the second row Stow 'n Go seat movement, without interference by the front seat. After the second row seat is stowed, the front seat will move back to the previous location once the Auto Advance 'n Return button is pushed again.

The Auto Advance 'n Return feature is available to both the front driver and passenger power seats, if equipped.

WARNING!

During power seat operation, personal injury or cargo damage may occur. Ensure the front seat is not occupied and the seat travel path is clear.

A one-touch Auto Advance 'n Return button is located on the B-pillar trim panel, just in front of the power sliding door.

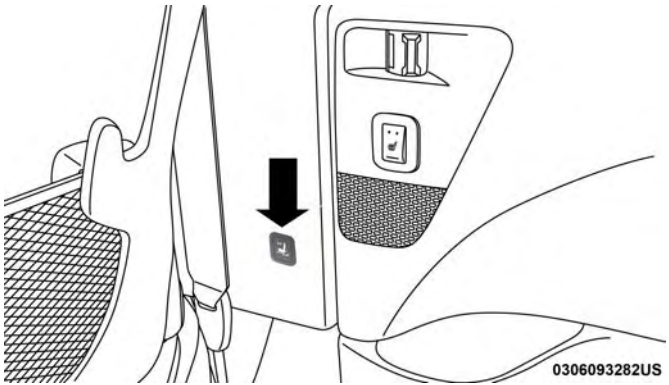

Auto Advance 'n Return Button

Using the Auto Advance 'n Return Feature

NOTE:

- The button is only functional when the power sliding door is open and the vehicle is in PARK. If the door is not open or the vehicle is not in PARK when the button is pushed, the front seat will not move and a message will be displayed in instrument cluster display.
- If the power sliding door is closing when the button is pushed, the front seat will not move and a message will be displayed in the instrument cluster display.

1. Push and release the Auto Advance 'n Return button. The front seat cushion and seat back will move as necessary to a location that will allow space for the second row Stow 'n Go seat movement.
2. Perform the second row Stow 'n Go seat movement. Refer to "Second Row Stow 'n Go" for further information.
3. Push and release the Auto Advance 'n Return button a second time. The front seat cushion and seat back will return to the original starting location.

NOTE:

- To abort seat operation while seat is in motion, push the Auto Advance 'n Return button, or push the front power seat button to stop the seat movement. Pushing the Auto Advance 'n Return button again will return the front seat to the original starting location.
- The Auto Advance 'n Return system includes obstacle detection. When the system detects an obstacle, the seat will stop, reverse direction, and return to the previous location. A message will be displayed in the instrument cluster indicating that an obstacle has been detected.
- If the front seat is already in a location that will allow space for Stow 'n Go of the second row seat, the front seat will not move and a message will be displayed in the instrument cluster.
- If calibration of the front seat is lost, the seat will automatically re-calibrate when the Auto Advance 'n Return button is pushed. This may result in the seat cushion moving forward and downward, before moving to the location that will allow space for the second row Stow 'n Go seat movement.

Second Row Stow 'n Go

For Manual Seats: To stow the seat in the floor, move the front seat all the way forward using the manual seat adjustment bar. Move the seat back all the way forward using the recliner handle located on the outboard side of the cushion. Move the seat height to at least mid position using the height adjuster handle in the outboard side of the cushion.

For Power Seats: Push the Auto Advance 'n Return button located on the B pillar trim (if equipped.) Refer to "Auto Advance 'n Return - If Equipped" in this section for instructions.

1. To access the storage bin, place the lock rod in the locked position.

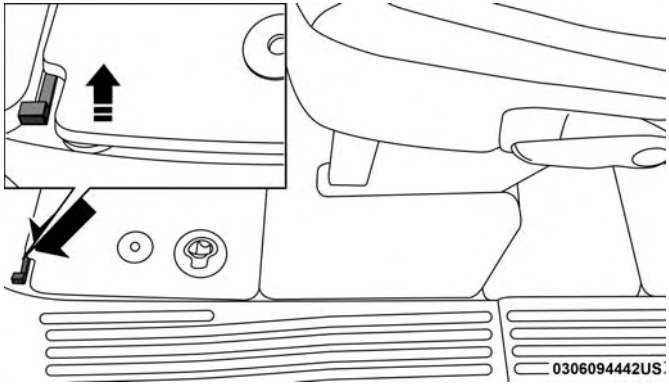

Lock Rod

NOTE:

- Push the lock rod inward for the locked position.
- Pull outward on the lock rod for the unlocked position.
- For information on storage bin function with the seats rearward refer to “Second Row Floor Storage Bins” in “Internal Equipment” for further information.

2. Pull the latch located near the second row seat to open the floor panel.

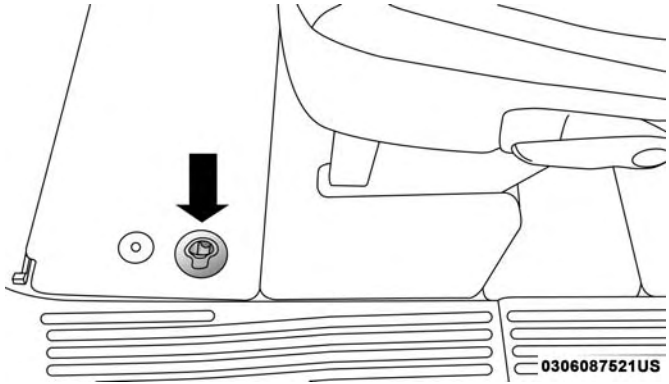

Floor Latch

3. Pull the floor panel and position it toward the front seats while folding the top half down and rest it against the front seats.

Push Panel Forward

4. Fold the armrest upward and stow the seat by grabbing the strap on the lower part of the seat back, and guide the seat into the tub.

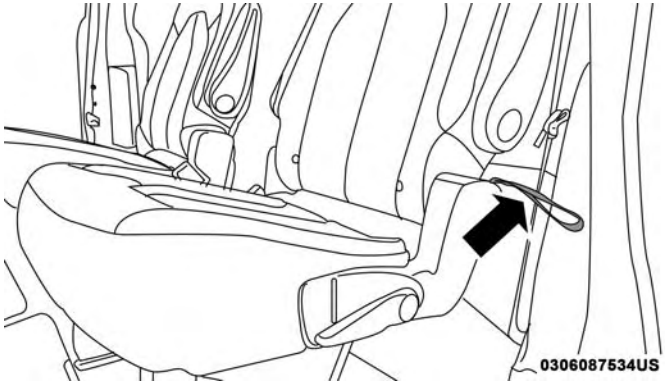

Pull Strap

5. Push down on the seat back to lock the seat in the tub.

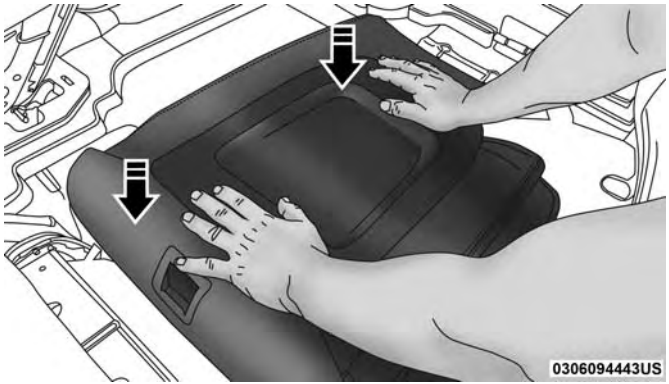

Push To Lock

6. Close the floor by pulling the floor panel backwards by the bottom corner edge of the panel.

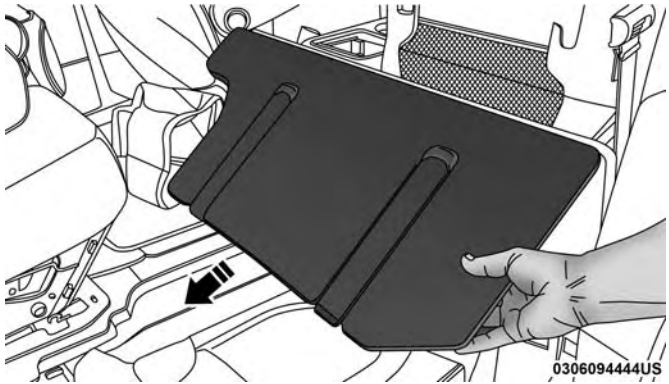

Extend Floor Panel

7. Push down on floor panel to lock into place.

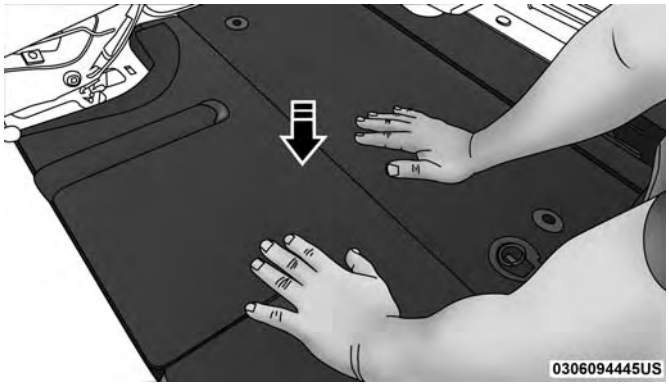

Push To Lock

8. Readjust the front seat as needed.

WARNING!

In a collision, serious injury could result if the seat storage bin covers are not properly latched:
- **Do not drive the vehicle with the storage bin covers open.**
- **Keep the storage bin covers closed and latched while the vehicle is in motion.**
- **Do not use a storage bin latch as a tie down.**

CAUTION!

- **The storage bin cover must be locked and flat to avoid damage from contact with the front seat tracks, which have minimal clearance to the cover.**
- **Do not sit on the second row seat when it is in the stowed position with the seatback upright otherwise damage to the seat may occur.**

To Unstow Second Row Seats

For Manual Seats: To unstow the seat from the floor, move the front seat all the way forward using the manual seat adjustment bar.

For Power Seats: Push the Auto Advance 'n Return button located on the B pillar trim (if equipped). Refer to "Auto Advance 'n Return - If Equipped" in this section for instructions.

1. To access the storage bin, place the lock rod in the locked position.

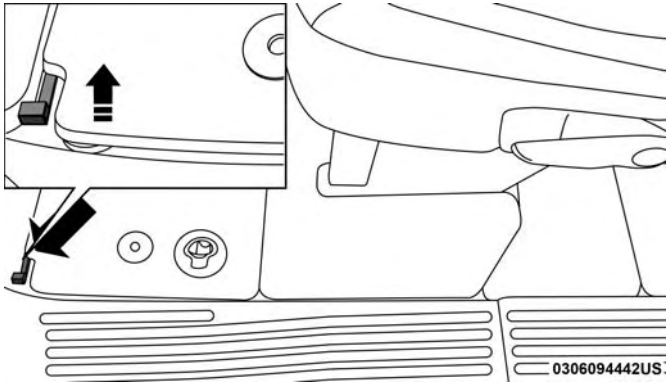

Lock Rod

NOTE:

- Push the lock rod inward for the locked position.
- Pull outward on the lock rod for the unlocked position.

2. Pull the latch located near the second row seat to open the floor panel.

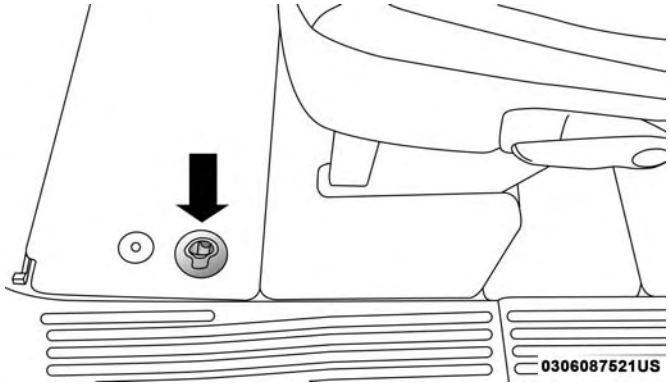

Floor Latch

3. Pull the floor panel and position it toward the front seats while folding the top half down and rest it against the front seats.

Push Panel Forward

4. Pull the strap located on the seat and pull the seat out of the storage bin. Push the seat rearward making sure that it locks into the floor. Fold the seatback into the upright position and pull the headrest up.

NOTE: The seatback may be locked, if it is, it will be necessary to use the recliner handle to unlock the back before folding into the upright position.

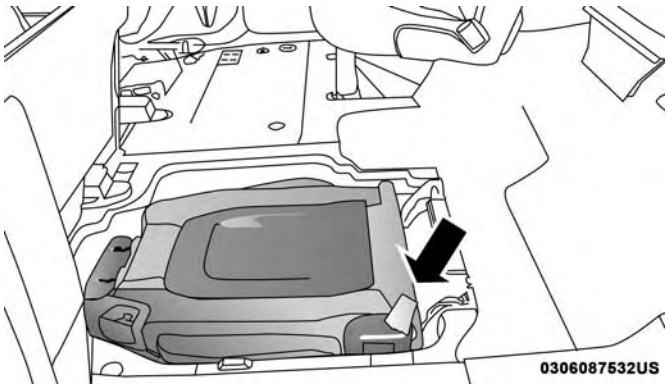

Pull Strap

5. To position the floor panel back into its original state, grab the bottom corner and extend it outward.

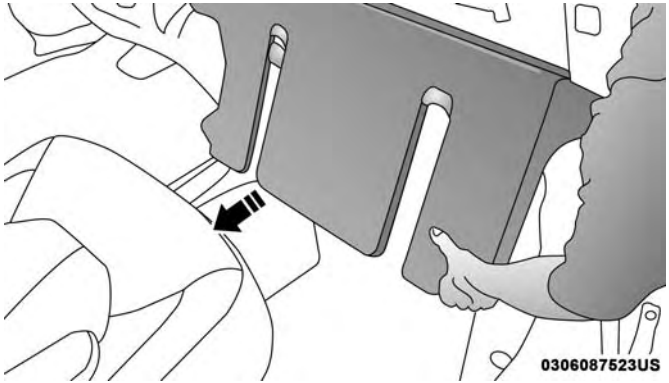

Extend Panel

6. Lay the floor panel flat and push down until it clicks into position. Replace the floor mat as needed.

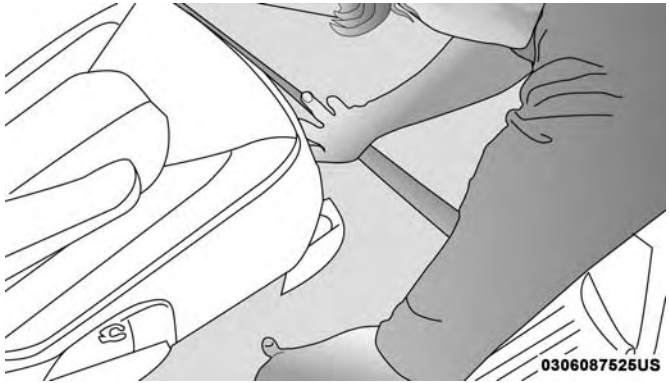

Push Down To Lock

7. Readjust the front seat as needed.

WARNING!

- **In a collision, you or others in your vehicle could be injured if seats are not properly latched to their floor attachments. Always be sure the seats are fully latched.**

(Continued)

WARNING! *(Continued)*

- **Sitting in a seat with the head restraint in its lowered position could result in serious injury or death in a collision. Always make sure the head restraints are in their upright positions when the seat is to be occupied.**

Power Adjustment (Front Seats) — If Equipped

Some models may be equipped with eight-way power seats for the driver and front passenger. The power seat switches are located on the outboard side of the seat. The switches control the movement of the seat cushion and the seatback.

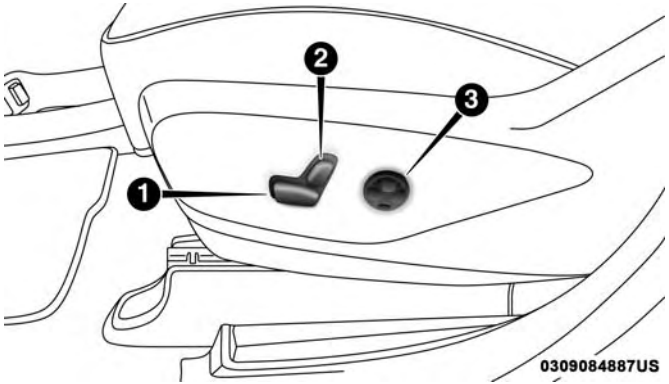

Driver Power Seat Switches

1 — Seat Switch
2 — Seatback Switch
3 — Lumbar Switch

WARNING!

- **Adjusting a seat while driving may be dangerous. Moving a seat while driving could result in loss of control which could cause a collision and serious injury or death.**

(Continued)

WARNING! *(Continued)*

- **Seats should be adjusted before fastening the seat belts and while the vehicle is parked. Serious injury or death could result from a poorly adjusted seat belt.**
- **Do not ride with the seatback reclined so that the shoulder belt is no longer resting against your chest. In a collision you could slide under the seat belt, which could result in serious injury or death.**

CAUTION!

Do not place any article under a power seat or impede its ability to move as it may cause damage to the seat controls. Seat travel may become limited if movement is stopped by an obstruction in the seat's path.

Adjusting The Seat Forward Or Rearward

The seat can be adjusted both forward and rearward. Push the seat switch forward or rearward, and the seat will move in the direction of the switch. Release the switch when the desired position has been reached.

Adjusting The Seat Up Or Down

The height of the seats can be adjusted up or down. Pull upward or push downward on the rear of seat switch, the seat will move in the direction of the switch. Release the switch when the desired position has been reached.

Tilting The Seat Up Or Down

The angle of the seat cushion can be adjusted in two directions. Pull upward or push downward on the front of the seat switch, the front of the seat cushion will move in the direction of the switch. Release the switch when the desired position has been reached.

Reclining The Seatback

The angle of the seatback can be adjusted forward or rearward. Push the seatback switch forward or rearward, the seat will move in the direction of the switch. Release the switch when the desired position is reached.

WARNING!

- **Adjusting a seat while driving may be dangerous. Moving a seat while driving could result in loss of control which could cause a collision and serious injury or death.**
- **Seats should be adjusted before fastening the seat belts and while the vehicle is parked. Serious injury or death could result from a poorly adjusted seat belt.**

(Continued)

WARNING! *(Continued)*

- **Do not ride with the seatback reclined so that the shoulder belt is no longer resting against your chest. In a collision you could slide under the seat belt, which could result in serious injury or death.**

CAUTION!

Do not place any article under a power seat or impede its ability to move as it may cause damage to the seat controls. Seat travel may become limited if movement is stopped by an obstruction in the seat's path.

Power Lumbar — If Equipped

Vehicles equipped with power driver or passenger seats may be equipped with power lumbar. The power lumbar switch is located on the outboard side of the power seat. Push the switch forward or rearward to increase or decrease the lumbar support. Push the switch upward or downward to raise or lower the lumbar support.

Power Adjustment (Rear Seats) — If Equipped

WARNING!

- **Adjusting a seat while driving may be dangerous. Moving a seat while driving could result in loss of control which could cause a collision and serious injury or death.**
- **Seats should be adjusted before fastening the seat belts and while the vehicle is parked. Serious injury or death could result from a poorly adjusted seat belt.**
- **Do not ride with the seatback reclined so that the shoulder belt is no longer resting against your chest. In a collision you could slide under the seat belt, which could result in serious injury or death.**
- **Do not place the seat belt webbing behind the third row stow clip when using the seat belt to restrain an occupant. The seat belt will not be positioned properly on the occupant and they could be more seriously injured in an accident as a result.**

CAUTION!

Do not place any article under a power seat or impede its ability to move as it may cause damage to the seat controls. Seat travel may become limited if movement is stopped by an obstruction in the seat's path.

Third Row Power Recline — If Equipped

The power recline feature, located on the trim panel next to the seat, adjusts the seatback angle forward/rearward for occupant comfort.

Reclining The Seatback

The angle of the seatback can be adjusted forward or rearward. Push and hold the forward or rearward button, the seat will move in the direction of the button push. Release the button when the desired position is reached.

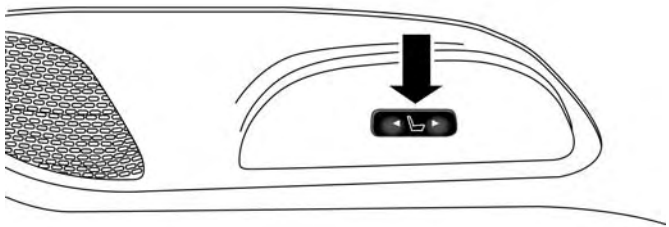

0306087559US

Third Row Power Seat Switch

Third Row Power Stow 'n Go Seat — If Equipped

A one-touch power folding seat switch is located in the right rear trim panel as part of a switch bank.

NOTE: The third row outboard seat belts may interfere with the power folding of the seat. Place the seat belt webbing behind the stow clip before stowing or opening the seat. When the seat is in the desired position, remove the webbing from the stow clip so that it is ready for use. Never leave the seat belt in the stow clip when it is used to restrain an occupant.

NOTE:

- The outer head restraints will lower automatically as necessary when the power seat begins to move.
- The center head restraint raises and lowers manually but will not lower automatically.
- The head restraint can also be lowered manually using the pull strap located at the back of the seat. Refer to "Head Restraints - Third Row" in "Head Restraints" for further information.

The switch is only functional when the liftgate is open and the vehicle is in PARK.

The rear switch bank allows multiple power folding and unfolding positions for the third row seats.

Left and right third row seats can be folded individually or together. The third row power folding seat adjusts to the following positions using the switch bank located on the left rear trim panel:

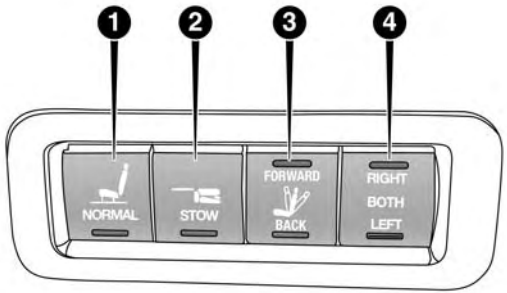

0306092122US

Rear Panel Power Switch Bank

1 — Open To Normal	3 — Fold Forward/Rearward
2 — Stow	4 — Right/Left Seats/Both Seats

To move the selected seat(s) to the normal (seated) position, push and release the "Normal" button. The seat will automatically stop when the Normal position is reached.

To move the selected seat(s) to the stow position, push and release the "Stow" button. The seat will automatically stop when the Stow position is reached.

To move the selected seat(s) back in the forward or reverse direction, push and hold the “Fold Forward/Back” button. Release the button when the desired position is reached.

NOTE:

1. Disconnect the center shoulder belt from the mini-buckle before attempting to fold/stow the power third row seats.
2. Before pushing the “Normal” or “Stow” button, place the outboard seat belt webbing behind the stow clips located on the rear trim panel. When the seat reaches the desired position, remove the webbing from the clip so it is ready for use to restrain an occupant.

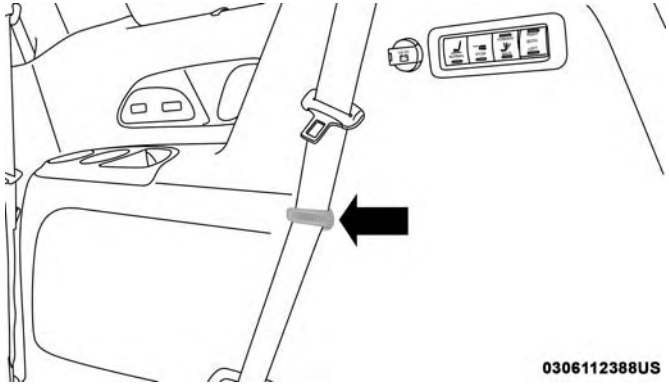

Seat Belt Stowage Clip

3. To abort seat operation while seat is in motion, push a different seat position selector switch to stop the seat. Once the seat stops moving, then the desired position can be selected.
4. The third row power seat system includes obstacle detection. When the system detects an obstacle, the motors will stop and reverse direction. Should this occur, remove the obstacle before pushing the button again.

Driver Memory Seat — If Equipped

The Memory Buttons (1) and (2) on the driver's door panel can be programmed to recall the driver's seat, outside mirrors, and radio station preset settings. Your key fobs can also be programmed to recall the same positions when the unlock button is pushed.

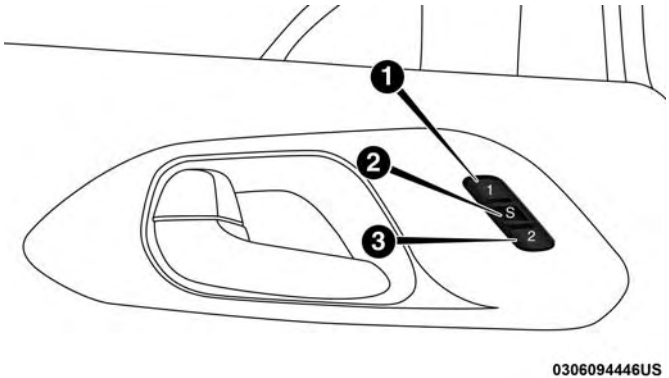

Driver Memory Switch

1 — Memory Button 1
2 — Set Button
3 — Memory Button 2

Your vehicle may have been delivered with two key fobs, one key fob can be linked to each of the memory positions.

Programming The Memory Feature

To create a new memory profile, perform the following:

1. Cycle the vehicle's ignition to the ON/RUN position (do not start the engine).
2. Adjust all memory profile settings to desired preferences (i.e., driver's seat, outside mirrors and radio station presets).
3. Push and release the set (S) button on the memory switch.
4. Within five seconds, push and release either of the memory buttons (1) or (2). The instrument cluster display will show which memory position has been set.

NOTE:

- Memory profiles can be set without the vehicle in PARK, but the vehicle must be in PARK to recall a memory profile.
- To set a memory profile to your key fob, refer to "Linking And Unlinking The Remote Keyless Entry Key Fob To Memory" in this section.

Linking And Unlinking The Remote Keyless Entry Key Fob To Memory

Your key fob can be programmed to recall one of two pre-programmed memory profiles by pushing the unlock button on the key fob.

NOTE: Before programming your key fob you must select the "Personal Settings Linked to Key Fob" feature through the Uconnect Settings. Refer to "Uconnect Settings" in "Multimedia" for further information.

To program your key fob, perform the following:

1. Cycle the vehicle's ignition to the OFF position.
2. Select a desired memory profile 1 or 2.

NOTE: If a memory profile has not already been set, refer to "Programming The Memory Feature" in this section for instructions on how to set a memory profile.

3. Once the profile has been recalled, push and release the set (S) button on the memory switch.
4. Push and release button (1) or (2) accordingly. "Memory Profile Set" (1 or 2) will display in the instrument cluster.
5. Push and release the lock button on the key fob within 10 seconds.

NOTE: Your key fob can be unlinked to your memory settings by pushing the set (S) button, and within 10 seconds, followed by pushing the unlock button on the key fob.

Memory Position Recall

NOTE: The vehicle speed must be less than or equal to 5 mph (8 km/h) to recall memory positions. If a recall is attempted when the vehicle speed is greater than 5 mph (8 km/h), a message will be displayed in the instrument cluster display.

To recall the memory settings for driver one, push memory button (1) on the driver's door or the unlock button on the key fob linked to memory position 1.

To recall the memory setting for driver two, push memory button (2) on the driver's door or the unlock button on the key fob linked to memory position 2.

A recall can be cancelled by pushing any of the memory buttons on the driver's door during a recall (S, 1, or 2). When a recall is cancelled, the driver's seat stops moving. A delay of one second will occur before another recall can be selected.

NOTE: Pushing the mirror adjust switch will cancel the memory mirror recall.

Easy Entry/Exit Seat (Available With Memory Seat Only)

This feature provides automatic driver seat positioning to enhance driver mobility when entering and exiting the vehicle.

The distance the driver seat moves depends on where you have the driver seat positioned when you cycle the vehicle's ignition to the OFF position.

- When the ignition is cycled to the OFF position, the driver seat will move about 2.4 inches (60 mm) rearward if the driver seat position is greater than or equal to 2.7 inches (67.7 mm) forward of the rear stop. The seat will return to its previously set position when the ignition is cycled out of the OFF position.
- When the ignition is cycled to the OFF position, the driver seat will move to a position 0.3 inches (7.7 mm) forward of the rear stop if the driver seat position is between 0.9 – 2.7 inches (22.7 – 67.7 mm) forward of the rear stop. The seat will return to its previously set position when the ignition is cycled out of the OFF position.
- The Easy Entry/Easy Exit feature is disabled when the driver seat position is less than 0.9 inches (22.7 mm) forward of the rear stop. At this position, there is no benefit to the driver by moving the seat for Easy Exit or Easy Entry.

Each stored memory setting will have an associated Easy Entry and Easy Exit Position.

NOTE: The Easy Entry/Easy Exit feature can be enabled or disabled through the programmable features in the instrument cluster display. For further information, refer to "Instrument Cluster Display" in "Getting To Know Your Instrument Panel".

Heated Seats

Front Heated Seats — If Equipped

The front heated seats control buttons are located within the climate or controls screen of the touchscreen.

You can choose from HI, LO or off heat settings. The indicator lights in each switch indicate the level of heat in use. Two indicator lights will illuminate for HI, one for LO and none for off.

- Press the heated seat button once to turn the HI setting on.

- Press the heated seat button a second time to turn the LO setting on.
- Press the heated seat button a third time to turn the heating elements off.

If the HI-level setting is selected, the system will automatically switch to LO-level after approximately 60 minutes of continuous operation. At that time, the display will change from HI to LO, indicating the change. The LO-level setting will turn off automatically after approximately 45 minutes.

NOTE:

- Once a heat setting is selected, heat will be felt within two to five minutes.
- The engine must be running for the heated seats to operate.

Vehicles Equipped With Remote Start

On models that are equipped with remote start, the heated seats can be programmed to come on during a remote start.

This feature can be programmed through the Uconnect system. Refer to "Uconnect Settings" in "Multimedia" for further information.

WARNING!

- **Persons who are unable to feel pain to the skin because of advanced age, chronic illness, diabetes, spinal cord injury, medication, alcohol use, exhaustion or other physical condition must exercise care when using the seat heater. It may cause burns even at low temperatures, especially if used for long periods of time.**
- **Do not place anything on the seat or seatback that insulates against heat, such as a blanket or cushion. This may cause the seat heater to overheat. Sitting in a seat that has been overheated could cause serious burns due to the increased surface temperature of the seat.**

Rear Heated Seats — If Equipped

On some models, the second row seats are equipped with heaters. There are two heated seat switches that allow the second row passengers to operate the seats independently. The heated seat switches are located on the sliding side door handle trim panels.

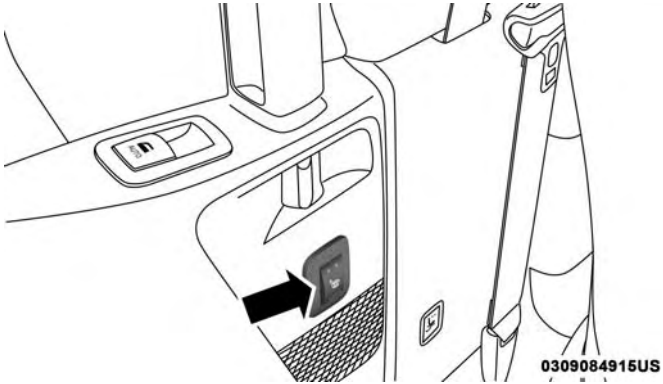

Second Row Heated Seat Switch

You can choose from HI, LO or off heat settings. Amber indicator lights in each switch indicate the level of heat in use. Two indicator lights will illuminate for HI, one for LO and none for off.

Push the switch once to select HI-level heating. Push the switch a second time to select LO-level heating. Push the switch a third time to shut the heating elements off.

NOTE: Once a heat setting is selected, heat will be felt within two to five minutes.

When the HI-level setting is selected, the heater will provide a boosted heat level during the initial stages of operation. Then, the heat output will drop to the normal HI-level. If the HI-level setting is selected, the system will automatically switch to LO-level after approximately 60 minutes of continuous operation. At that time, the display will change from HI to LO, indicating the change. The LO-level setting will turn off automatically after approximately 45 minutes.

Ventilated Seats — If Equipped

Located in the first row seat cushions are small fans that draw the air from the passenger compartment and move air through fine perforations in the seat cover to help keep the driver and front passenger cooler in higher ambient temperatures. The fans operate at two speeds, HI and LO.

The front ventilated seats control buttons are located within the climate or controls screen of the touchscreen.

- Press the ventilated seat button once to choose HI.
- Press the ventilated seat button a second time to choose LO.
- Press the ventilated seat button a third time to turn the ventilated seat off.

NOTE: The engine must be running for the ventilated seats to operate.

Vehicles Equipped With Remote Start

On models that are equipped with remote start, the ventilated seats can be programed to come on during a remote start.

This feature can be programmed through the Uconnect system. Refer to "Uconnect Settings" in "Multimedia" for further information.

Adjustable Armrest (Front Seats) — If Equipped

Your vehicle may be equipped with armrests on the front seats. To adjust, push and hold the button while moving to the desired position. Release the button once the desired position is reached.

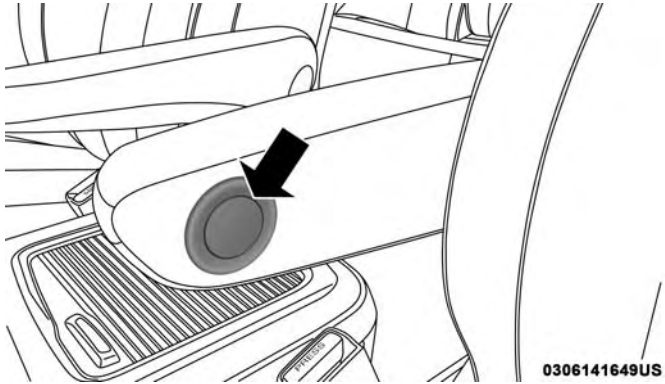

Adjustable Armrest

Plastic Grocery Bag Retainer Hooks

Retainer hooks which will hold plastic grocery bag handles are built into the seatbacks of the first and third row rear seats. The floor supports the partial weight of the bagged goods.

HEAD RESTRAINTS

Head restraints are designed to reduce the risk of injury by restricting head movement in the event of a rear impact. Head restraints should be adjusted so that the top of the head restraint is located above the top of your ear.

WARNING!

- **All occupants, including the driver, should not operate a vehicle or sit in a vehicle's seat until the head restraints are placed in their proper positions in order to minimize the risk of neck injury in the event of a crash.**
- **Head restraints should never be adjusted while the vehicle is in motion. Driving a vehicle with the head restraints improperly adjusted or removed could cause serious injury or death in the event of a collision.**

Head Restraints — Front Seats

The front driver and passenger seats are equipped with four-way head restraints.

To raise the head restraint, pull upward on the head restraint. To lower the head restraint, push the adjustment button, located at the base of the head restraint, and push downward. The front head restraints are also adjustable forward and rearward. To adjust forward, pull the head restraint toward the front of the vehicle to desired position. To adjust the head restraint rearward, pull forward on the head restraint to furthest forward position and head restraint will reset to furthest rearward position.

NOTE: To remove the head restraint, raise it as far as it can go. Then, push the release button and the adjustment button at the base of each post while pulling the head restraint up. Seatback angle may need to be adjusted to fully remove the head restraint. To reinstall the head

restraint, put the head restraint posts into the holes and push downward. Then, adjust the head restraint to the appropriate height.

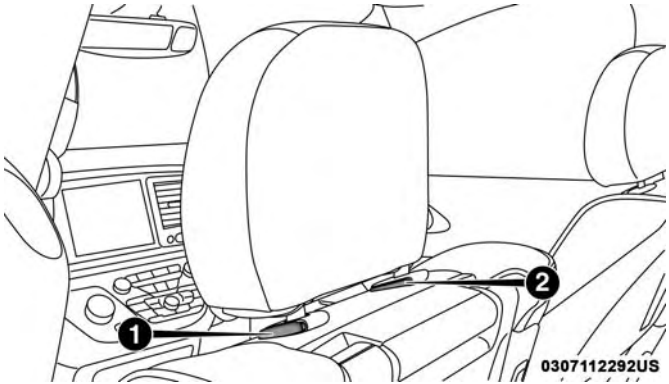

Front Head Restraint

1 — Adjustment Button
2 — Release Button

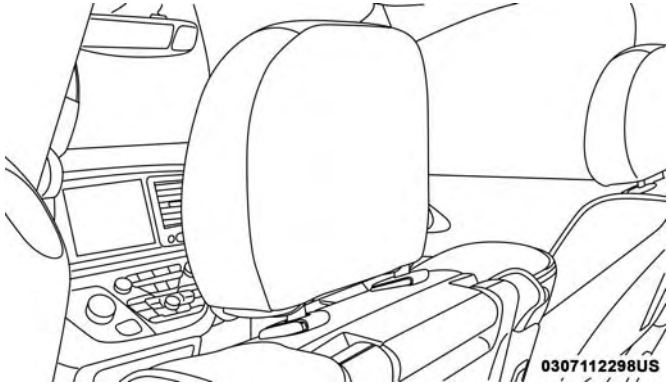

Normal Position

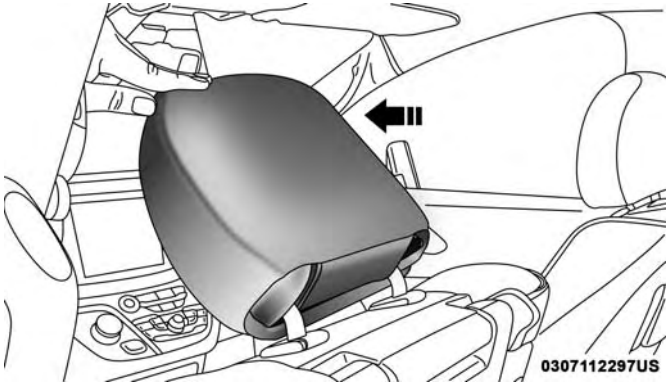

Forward Adjustment

WARNING!

- **A loose head restraint thrown forward in a collision or hard stop could cause serious injury or death to occupants of the vehicle. Always securely stow removed head restraints in a location outside the occupant compartment.**
- **ALL the head restraints MUST be reinstalled in the vehicle to properly protect the occupants. Follow the re-installation instructions above prior to operating the vehicle or occupying a seat.**

Head Restraints — Second Row Quad Seats

The second row outboard head restraints, as well as the removable 8th passenger seat (if equipped) have adjustable head restraints.

To raise the head restraint, pull upward on the head restraint. To lower the head restraint, push the adjustment button, located at the base of the head restraint, and push downward.

NOTE: If equipped with Stow 'n Go seating, the head restraints are non-adjustable. **Do not** pull on non-adjustable head restraints when folding.

Head Restraints — Second Row Bench

The second row bench seat is equipped with adjustable head restraints.

To raise the head restraint, pull upward on the head restraint. To lower the head restraint, push the adjustment button, located at the base of the head restraint, and push downward.

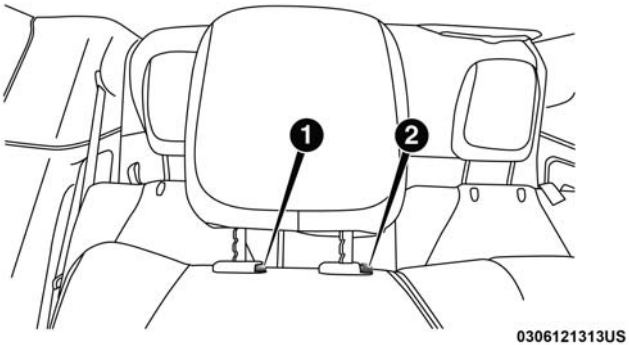

Bench Seat Head Restraint

1 — Release Button
2 — Adjustment Button

To remove the head restraint, raise it as far as it can go. Then, push the release button and the adjustment button at the base of each post while pulling the head restraint up. Seatback angle may need to be adjusted to fully remove the head restraint. To reinstall the head restraint, put the head restraint posts into the holes and push downward. Then, adjust the head restraint to the appropriate height.

WARNING!

- **A loose head restraint thrown forward in a collision or hard stop could cause serious injury or death to occupants of the vehicle. Always securely stow removed head restraints in a location outside the occupant compartment.**
- **ALL the head restraints MUST be reinstalled in the vehicle to properly protect the occupants. Follow the re-installation instructions above prior to operating the vehicle or occupying a seat.**

NOTE: For child restraint tethering, refer to “Occupant Restraint Systems” in “Safety” for further information.

Head Restraints — Third Row

The outboard head restraints can be manually folded forward for improved rearward visibility. Pull the release strap to fold them forward.

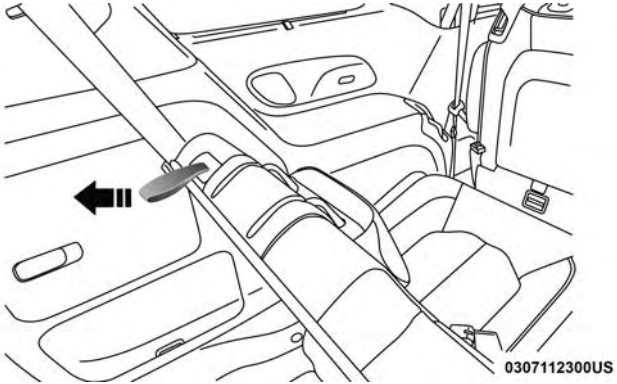

Release Strap

NOTE:

- The head restraints must be raised manually when occupying the third row.
- Do not fold if there are passengers seated in the third row seats.

The head restraint in the center position can be raised and lowered for tether routing or height adjustment. Refer to "Occupant Restraint Systems" in "Safety" for further information.

NOTE: To remove the center head restraint, raise it as far as it can go. Then, push the release button and the adjustment button at the base of each post while pulling the head restraint up. To reinstall the head restraint, put the head restraint posts into the holes and push downward. Then, using the adjustment button, adjust the head restraint to the appropriate height.

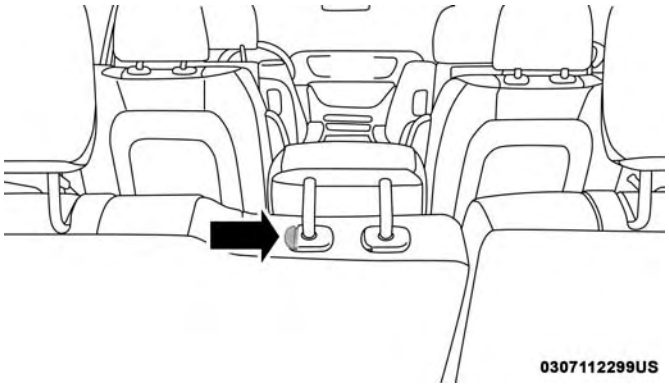

Adjustment Button

WARNING!

ALL the head restraints MUST be reinstalled in the vehicle to properly protect the occupants. Follow the re-installation instructions above prior to operating the vehicle or occupying a seat.

Power Folding Third Row Head Restraints — If Equipped

For improved visibility, the third row outboard head restraints can be folded using the Uconnect System.

Press the "Controls" button located on the bottom of the Uconnect display.

Press the Head Restraint Fold button to power fold the third row head restraints.

NOTE:

- The head restraints can be folded downward using the Head Restraint button or using the manual release strap. The head restraints must be raised manually when occupying the third row.
- Do not fold if there are passengers seated in the third row seats.

STEERING WHEEL

Tilt/Telescoping Steering Column

This feature allows you to tilt the steering column upward or downward. It also allows you to lengthen or shorten the steering column. The tilt/telescoping lever is located left of the steering wheel at the end of the steering column.

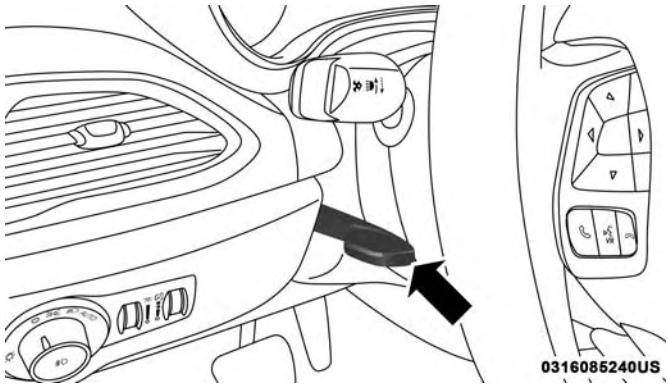

Tilt/Telescoping Lever

To unlock the steering column, push the lever downward (toward the floor). To tilt the steering column, move the steering wheel upward or downward as desired. To lengthen or shorten the steering column, pull the steering wheel outward or push it inward as desired. To lock the

steering column in position, push the lever upward until fully engaged.

WARNING!

Do not adjust the steering column while driving. Adjusting the steering column while driving or driving with the steering column unlocked, could cause the driver to lose control of the vehicle. Failure to follow this warning may result in serious injury or death.

Heated Steering Wheel — If Equipped

The steering wheel contains a heating element that helps warm your hands in cold weather. The heated steering wheel has only one temperature setting. Once the heated steering wheel has been turned on, it will operate for an average of 80 minutes or more before automatically shutting off. This time may vary depending on the temperature of the environment. The heated steering wheel can shut off early or may not turn on when the steering wheel is already warm.

The heated steering wheel control button is located within the Uconnect system. You can gain access to the control button through the climate screen or the controls screen.

- Press the heated steering wheel button once to turn the heating element on.
- Press the heated steering wheel button a second time to turn the heating element off.

NOTE: The engine must be running for the heated steering wheel to operate.

Vehicles Equipped With Remote Start

On models that are equipped with remote start, the heated steering wheel can be programmed to come on during a remote start through the Uconnect system. Refer to "Uconnect Settings" in "Multimedia" for further information.

WARNING!

- **Persons who are unable to feel pain to the skin because of advanced age, chronic illness, diabetes, spinal cord injury, medication, alcohol use, exhaustion, or other physical conditions must exercise care when using the steering wheel heater. It may cause**

(Continued)

WARNING! *(Continued)*

burns even at low temperatures, especially if used for long periods.

- **Do not place anything on the steering wheel that insulates against heat, such as a blanket or steering wheel covers of any type and material. This may cause the steering wheel heater to overheat.**

MIRRORS

Inside Day/Night Mirror — If Equipped

A single ball joint mirror is used to allow the driver to adjust up, down and left, right. Mirror should be adjusted to center on the view through the rear window.

Headlight glare can be reduced by moving the small control under the mirror to the night position (toward the rear of the vehicle). The mirror should be adjusted while set in the day position (toward the windshield).

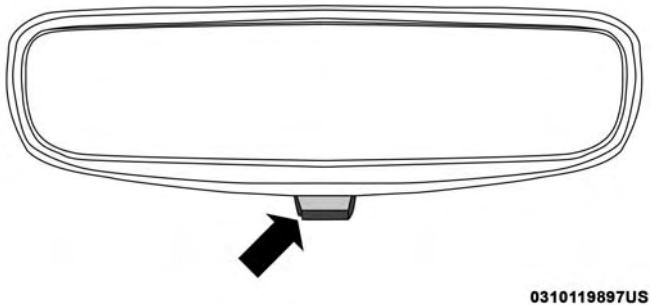

Manual Rearview Mirror

Automatic Dimming Mirror — If Equipped

This mirror automatically adjusts for headlight glare from vehicles behind you. You can turn the feature on or off by pushing the button at the base of the mirror. A light to the left of the button will illuminate to indicate when the dimming feature is activated. The sensor to the right of the button does not illuminate.

NOTE: This feature is disabled when the vehicle is in REVERSE.

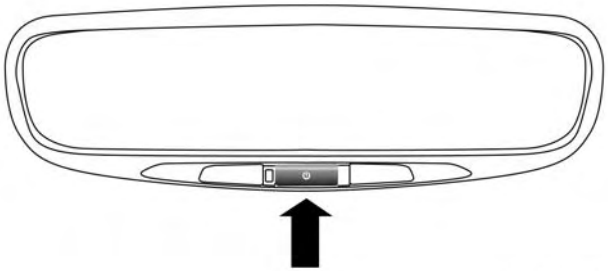

Automatic Dimming Mirror

CAUTION!

To avoid damage to the mirror during cleaning, never spray any cleaning solution directly onto the mirror. Apply the solution onto a clean cloth and wipe the mirror clean.

Outside Mirrors

To receive maximum benefit, adjust the outside mirror(s) to center on the adjacent lane of traffic with a slight overlap of the view obtained on the inside mirror.

WARNING!

Vehicles and other objects seen in an outside convex mirror will look smaller and farther away than they really are. Relying too much on side convex mirrors could cause you to collide with another vehicle or other object. Use your inside mirror when judging the size or distance of a vehicle seen in a side convex mirror.

Driver's Outside Automatic Dimming Mirror — If Equipped

The driver's outside mirror will automatically adjust for glare from vehicles behind you. This feature is controlled by the inside automatic dimming mirror and will automatically adjust for headlight glare when the inside mirror adjusts.

Conversation Mirror

Located in the overhead console there is a conversation mirror to view all the passengers in the vehicle. Push the panel to release the drop down mirror. Raise the mirror and push to latch it back in the stowed position.

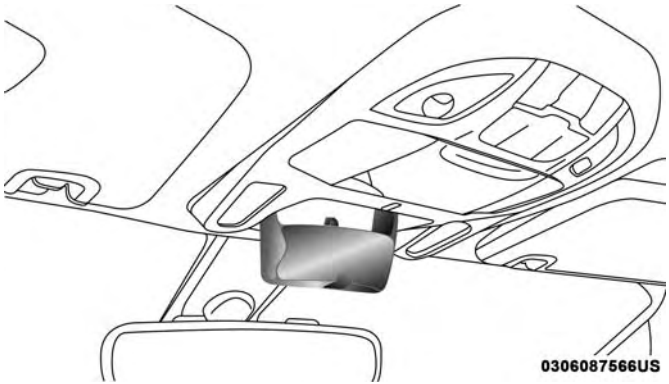

Conversation Mirror

Power Mirrors — If Equipped

The power mirror controls are located on the driver-side door trim panel.

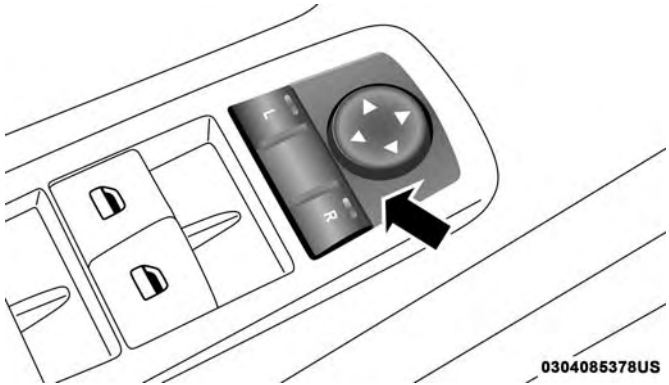

Power Mirror Controls

The power mirror controls consist of mirror select buttons and a four-way mirror control switch. To adjust a mirror, push either the L (left) or R (right) to select the mirror that you want to adjust.

NOTE: A light in the selected button will illuminate indicating the mirror is activated and can be adjusted.

Using the mirror control switch, push on any of the four arrows for the direction that you want the mirror to move.

Left and Right side power mirror preselected positions can be controlled by the optional Driver Memory Seat Feature. Refer to "Driver Memory Seat" in "Seats" for further information.

Outside Mirrors Folding Feature

All outside mirrors are hinged and may be moved either forward or rearward to resist damage. The hinges have three detent positions:

- Full forward position
- Full rearward position
- Normal position

Heated Mirrors — If Equipped

These mirrors are heated to melt frost or ice. This feature will be activated whenever you turn on the rear window defroster (if equipped).

Refer to "Climate Controls" in this section for further information.

Tilt Side Mirrors In Reverse (Available With Memory Seat Only) — If Equipped

Tilt Side Mirrors In Reverse provides automatic outside mirror positioning which will aid the driver's view of the ground rearward of the front doors. The driver's outside mirror will move slightly downward from the present position when the vehicle is shifted into REVERSE. The driver's outside mirror will then return to the original position when the vehicle is shifted out of the REVERSE position. Each stored memory setting will have an associated Tilt Side Mirrors In Reverse position.

NOTE: The Tilt Side Mirrors In Reverse feature is not enabled when delivered from the factory. The Tilt Side Mirrors In Reverse feature can be enabled or disabled through the radio touchscreen. Refer to "Uconnect Settings" in "Multimedia" for further information.

Power Folding Mirrors — If Equipped

The switch for the power folding mirrors is located between the power mirror switches L (left) and R (right). Push the switch once and the mirrors will fold in, pushing the switch a second time will return the mirrors to the normal driving position.

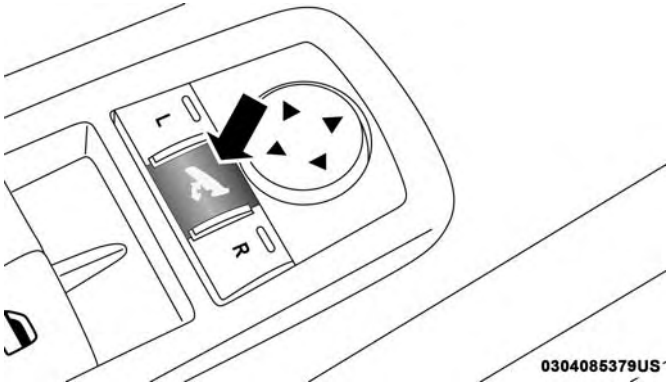

Power Folding Mirror Switch

NOTE: If the vehicle speed is greater than 10 mph (16 km/h), the folding feature will be disabled.

If the mirrors are in the folded position, and vehicle speed is equal or greater than 10 mph (16 km/h), they will automatically unfold.

Resetting The Power Folding Outside Mirrors

You may need to reset the power folding mirrors if the following occurs:

- The mirrors are accidentally blocked while folding.
- The mirrors are accidentally manually folded/unfolded.
- The mirrors come out of the unfolded position.
- The mirrors shake and vibrate at normal driving speeds.

To reset the power folding mirrors: fold and unfold them by pushing the button (this may require multiple button pushes). This resets them to their normal position.

Illuminated Vanity Mirrors — If Equipped

An illuminated vanity mirror is located on the sun visor. To use the mirror, rotate the sun visor down and swing the mirror cover upward. The lights turn on automatically. Closing the mirror cover turns off the lights.

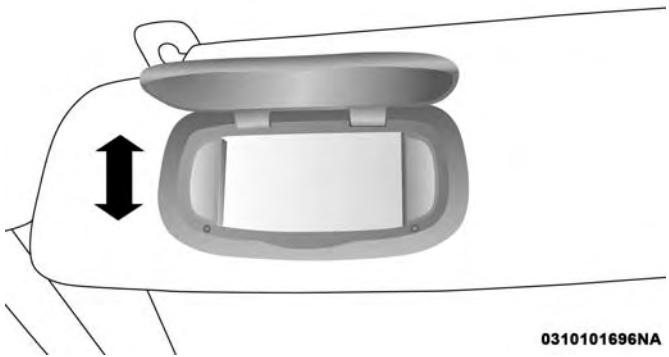

Illuminated Mirror

EXTERIOR LIGHTS

Multifunction Lever

The multifunction lever is located on the left side of the steering column. The multifunction lever controls the turn signals, headlight high/low beams, and flash-to-pass functions.

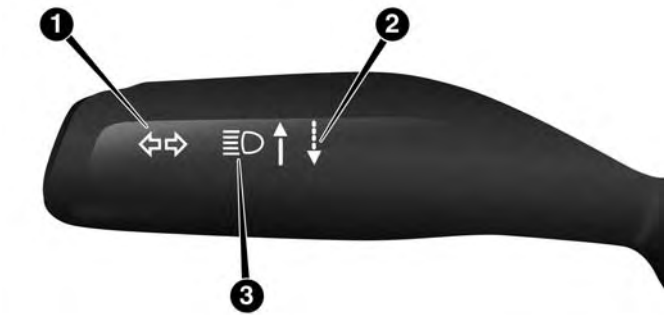

0306094451US

Multifunction Lever

1 — Turn Signals
2 — Flash-To-Pass
3 — Headlight Beams Low/High

Headlight Switch

The headlight switch is located on the left side of the instrument panel. The switch controls the operation of the headlights, parking lights, instrument panel lights, interior lights and the fog lights.

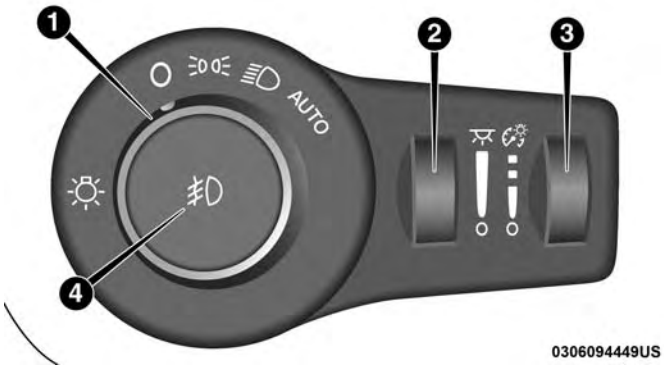

0306094449US

Headlight Switch

1 — Rotate Headlight Switch
2 — Ambient Dimmer Control
3 — Instrument Panel Dimmer
4 — Fog Lamps Button

Rotate the headlight switch clockwise to the second detent for parking light and instrument panel light operation.

Rotate the headlight switch to the third detent for headlight, parking light and instrument panel operation.

Daytime Running Lights — If Equipped

The headlights or LED light bars on your vehicle will illuminate when the engine is started. This provides a constant lights on condition until the ignition is turned OFF. If the parking brake is applied, the Daytime Running Lights (DRL) will turn off. Also, if a turn signal is activated, the DRL lamp on the same side of the vehicle will turn off for the duration of the turn signal activation. Once the turn signal is no longer active, the DRL lamp will illuminate.

High/Low Beam Switch

When the headlights are turned on, pushing the multifunction lever toward the instrument panel will switch from low beams to high beams. Pulling back to the neutral position returns the headlights to the low beam operation.

Automatic High Beam — If Equipped

The Automatic High Beam system provides increased forward lighting at night by automating high beam control through the use of a digital camera mounted on the windshield. This camera detects vehicle specific light and automatically switches from high beams to low beams until the approaching vehicle is out of view.

NOTE: Broken, muddy, or obstructed headlights and taillights of vehicles in the field of view will cause headlights to remain on longer (closer to the vehicle). Also, dirt, film and other obstructions on the windshield or camera lens will cause the system to function improperly.

To Activate

1. Select “Automatic High Beams — ON” through the Uconnect system. Refer to ″Uconnect Settings” in “Multimedia” for further information.
2. Rotate the headlight switch clockwise to the AUTO position.
3. Push the multifunction lever away from you to switch the headlights to the high beam position. Refer to “Multifunction Lever” for further information.

NOTE: This system will not activate until the vehicle is at, or above 16 mph (25 km/h).

To Deactivate

Perform either of the following steps to deactivate the Automatic High Beam system.

1. Select “Automatic High Beams — OFF” through the Uconnect System. Refer to “Uconnect Settings” in “Multimedia” for further information.

2. Pull the multifunction lever toward you to switch the headlights from the high beam to the low beam position.
3. Rotate the headlight switch counterclockwise from the AUTO to the on position.

NOTE: Once active, the Automatic High Beam system will stop functioning below 12 mph (20 km/h).

Flash-To-Pass

You can signal another vehicle with your headlights by lightly pulling the multifunction lever toward you. This will cause the high beam headlights to turn on, and remain on, until the lever is released.

Automatic Headlights — If Equipped

This system automatically turns your headlights on or off based on ambient light levels. To turn the system on, turn the headlight switch to the extreme clockwise position aligning the indicator with the AUTO on the headlight switch. When the system is on, the Headlight Time Delay feature is also on. This means your headlights will stay on for up to 90 seconds after you turn the ignition switch OFF. To turn the Automatic System off, turn the headlight switch counterclockwise to the O (off) position.

NOTE: The engine must be running before the headlights will come on in the Automatic mode.

Headlights On With Wipers — If Equipped

When your headlights are in the AUTO mode and the engine is running, the headlights will automatically turn on when the wiper system is also turned on. Headlights on when windshield wipers are on may be found on vehicles equipped with an automatic headlight system.

NOTE: The Headlights with Wipers feature can be turned on or off through the Uconnect system. Refer to “Uconnect Settings” in “Multimedia” for further information.

Headlight Delay — If Equipped

This feature provides the safety of headlight illumination for up to 90 seconds after exiting your vehicle.

To activate the delay feature, turn the ignition OFF while the headlights are still on. The 90 second delay interval begins when headlight switch is turned off. If the headlights or parking lights are turned back on or the ignition switch is turned ON, the delay will be cancelled.

When exiting the vehicle the driver can choose to have the headlights remain on for 30, 60, or 90 seconds or not remain on. To change the timer setting, select the proper setting through the Uconnect System.

Refer to “Uconnect Settings” in “Multimedia” for further information.

If the headlights are turned off before the ignition, they will turn off in the normal manner.

NOTE: The headlights must be turned off within 45 seconds of turning the ignition OFF to activate this feature.

Lights-On Reminder

If the headlights or the parking lights are left on after the ignition switch is turned OFF, a chime will sound when the driver’s door is opened.

Front Fog Lights — If Equipped

To activate the front fog lights, turn on the parking lights or the low beam headlights and push in the headlight switch control knob. Pushing the headlight switch control knob in a second time will turn the front fog lights off.

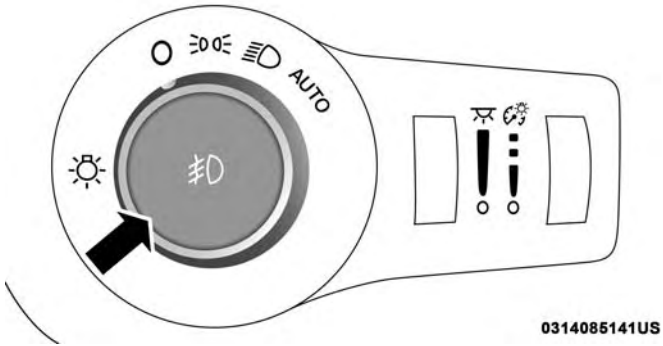

Fog Light Switch

Turn Signals

Move the multifunction lever up or down and the arrows on each side of the instrument cluster flash to show proper operation of the front and rear turn signal lights.

NOTE: If either light remains on and does not flash, or there is a very fast flash rate, check for a defective outside light bulb. If an indicator fails to light when the lever is moved, it would suggest that the indicator bulb is defective.

Turn Signal Warning

If the vehicle electronics sense that the vehicle has traveled for about 1 mile (1.6 km) with the turn signals on, a chime will sound and a message will display in the cluster to alert the driver.

Lane Change Assist — If Equipped

Tap the multifunction lever up or down once, without moving beyond the detent, and the turn signal (right or left) will flash three times then automatically turn off.

Battery Protection

This feature provides battery protection to avoid wearing down the battery if the headlights or parking lights are left on for extended periods of time when the ignition is in the OFF position. After eight minutes of the ignition being in the OFF position and the headlight switch in any position other than OFF or AUTO, the lights will turn off automatically until the next cycle of the ignition or headlight switch.

The battery protection feature will be disabled if the ignition is placed in any position other than OFF during the eight minute delay.

INTERIOR LIGHTS

Courtesy/Interior Lighting

The courtesy light switches are used to turn the courtesy lights on/off.

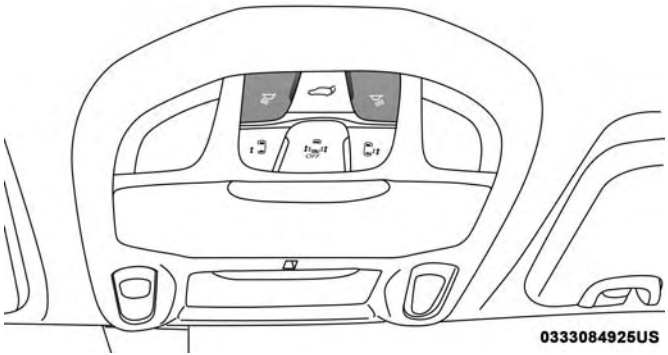

Courtesy Light Switches

To operate the courtesy lights, push either the driver or passenger light switch.

NOTE:

- Before exiting the vehicle, make sure that the interior lights are turned off. This will prevent the battery from discharging once the doors are closed.
- If a light is left on, it will automatically be turned off approximately 10 minutes after the ignition is in the STOP/OFF position.

Rear Courtesy/Reading Lights — If Equipped

Located above the rear passengers are courtesy/reading lights. The lights turn on when a front door, a sliding door or the liftgate is opened. If your vehicle is equipped with remote keyless entry the lights will also turn on when the unlock button on the key fob is pushed.

The courtesy lights also function as reading lights. Push the lens to turn these lights on while inside the vehicle. Push the lens a second time to turn each light off.

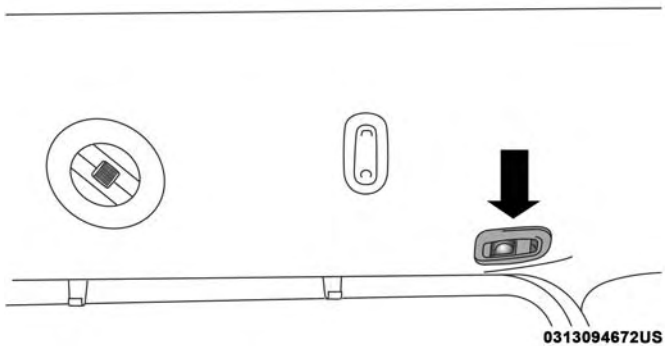

Reading Lights

Ambient Light Control — If Equipped

Rotate the ambient dimmer control upward or downward to increase or decrease the brightness of the ambient light located in the overhead console, door handle lights, under I/P lights, door map pocket lights, and cubby bin lights.

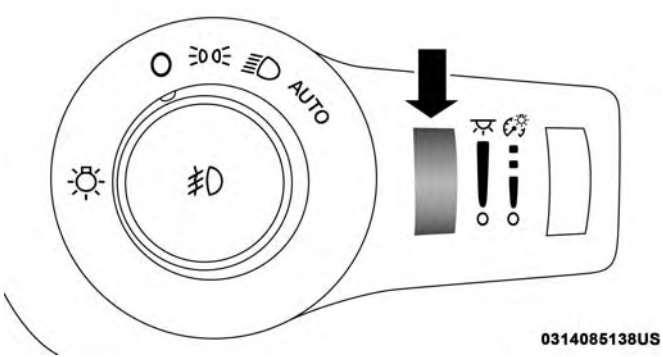

Ambient Light/Door Handle Light Dimmer

Interior Lighting Off

Rotate the right (instrument panel) dimmer control to the off position (extreme bottom). The interior lights will remain off when the doors or liftgate are open.

Instrument Panel Dimmer Control

The instrument panel dimmer control is part of the headlight switch, and is located on the driver's side of the instrument panel.

With the parking lights or headlights on, rotate the instrument panel dimmer control upward or downward to increase or decrease the brightness of the instrument panel. At the top detent of the instrument panel dimmer, all the interior lights will also illuminate. At the bottom most

setting (extreme bottom) interior lights are turned off (dome off), and the cluster, radio and instrument lighting go to their lowest dimmable setting.

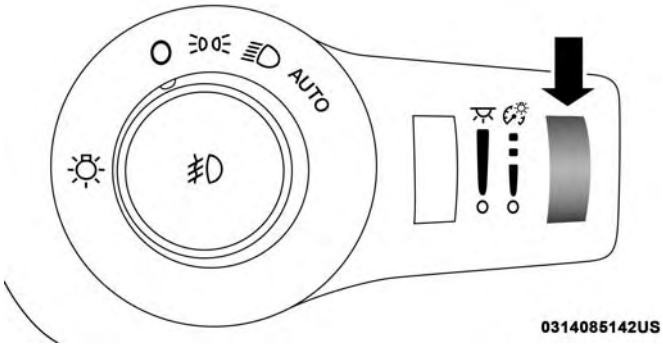

Instrument Panel Dimmer

Parade Mode (Daytime Brightness Feature)

Rotate the instrument panel dimmer control upward to the first detent. This feature brightens all text displays such as the odometer, instrument cluster display, and radio when the position lights or headlights are on.

WINDSHIELD WIPER AND WASHERS

Windshield Wiper Operation

The wipers and washers are operated by a switch within the wiper lever. Rotate the end of the lever upward, to the first detent past the intermittent settings for low-speed wiper operation. Rotate the end of the lever upward to the second detent past the intermittent settings for high-speed wiper operation.

Washer And Wiper Controls

NOTE: Always remove any buildup of snow that prevents the windshield wiper blades from returning to the off position. If the windshield wiper switch is turned off and the blades cannot return to the off position, damage to the wiper motor may occur.

WARNING!

Sudden loss of visibility through the windshield could lead to a collision. You might not see other vehicles or other obstacles. To avoid sudden icing of the windshield during freezing weather, warm the windshield with the defroster before and during windshield washer use.

Intermittent Wiper System

Use the intermittent wiper when weather conditions make a single wiping cycle with a variable pause between cycles desirable. Rotate the end of the wiper lever to the first detent position, and then turn the end of the lever to select the desired delay interval. There are four delay settings, which allow you to regulate the wipe interval from a minimum of one cycle every second to a maximum of approximately 36 seconds between cycles. The delay intervals will double in duration when the vehicle speed is 10 mph (16 km/h) or less.

Windshield Washers

To use the washer, pull the lever rearward toward you and hold while spray is desired. If the lever is pulled while on the intermittent setting, the wipers will turn on and operate for several wipe cycles after the lever is released, and then resume the intermittent interval previously selected. If the lever is pulled while the wipers are in the off position, the wipers will operate several wipe cycles, then turn off.

Mist Feature

Use the Mist feature when weather conditions make occasional usage of the wipers necessary. Push the lever upward to the MIST position and release for a single wiping cycle.

NOTE: The mist feature does not activate the washer pump; therefore, no washer fluid will be sprayed on the windshield. The wash function must be used in order to spray the windshield with washer fluid.

Rain Sensing Wipers — If Equipped

This feature senses rain or snowfall on the windshield and automatically activates the wipers for the driver. This feature is especially useful for road splash or overspray from the windshield washers of the vehicle ahead. Rotate the end of the multifunction lever to one of the four intermittent wiper sensitivity settings to activate this feature.

The sensitivity of the system is adjustable from the multifunction lever. Wiper sensitivity position 3 has been calibrated for best overall wiping sensitivity. If the operator desires more wiping sensitivity, they may select sensitivity position 4. If the operator desires less wiping sensitivity, they may select sensitivity positions 2 or 1. Place the multifunction lever in the OFF position when not using the system.

NOTE:

- The Rain Sensing feature will not operate when the wiper speed is in the low or high position.
- The Rain Sensing feature may not function properly when ice or dried saltwater is present on the windshield.
- Use of Rain-X or products containing wax or silicone may reduce rain sensor performance.
- The Rain Sensing feature can be turned on and off through the Uconnect System. Refer to “Uconnect Settings” in “Multimedia” for further information.

The Rain Sensing system has protective features for the wiper blades and arms. It will not operate under the following conditions:

- **Low Temperature Wipe Inhibit** — The Rain Sensing feature will not operate when the ignition is first switched ON, when the vehicle is stationary and the outside temperature is below 32°F (0°C), unless the wiper control on the multifunction lever is moved, the vehicle speed becomes greater than 3 mph (5 km/h) or the outside temperature rises above freezing.

- **Neutral Wipe Inhibit** — The Rain Sensing feature will not operate when the ignition is ON, when the transmission gear selector is in the NEUTRAL position and the vehicle speed is less than 3 mph (5 km/h), unless the wiper control on the multifunction lever is moved, the vehicle speed is greater than 3 mph (5 km/h) or the gear selector is moved out of the NEUTRAL position.
- **Remote Start Mode Inhibit** — On vehicles equipped with Remote Starting system, Rain Sensing wipers are not operational when the vehicle is in the remote start mode. Once the operator is in the vehicle and has placed the ignition switch in the RUN position, rain sensing wiper operation can resume, if it has been selected, and no other inhibit conditions (mentioned previously) exist.

Rear Wiper And Washer

Rear Windshield Wiper Operation

Rotate the windshield wiper lever center ring upwards to operate one of two modes for the rear window wiper:

- First detent — intermittent mode.
- Second detent — continuous mode.

Rear Windshield Washer Operation

Pushing the windshield wiper lever forward activates the rear window washer. If the lever is pushed while on the intermittent setting, the wipers will turn on and operate for several wipe cycles after the lever is released, and then resume the intermittent interval previously selected. If the lever is pushed while the wipers are in the off position, the wipers will operate several wipe cycles, then turn off.

CLIMATE CONTROLS

Manual Climate Controls Overview

Uconnect 4 With 7–inch Display Manual Climate Controls

Uconnect 4/4C NAV With 8.4–inch Display Manual Climate Controls

Manual Climate Control Descriptions

Icon	Description
MAX A/C	**MAX A/C Button** Press and release to change the current setting, the indicator illuminates when MAX A/C is ON. Performing this function again will cause the MAX A/C operation to switch into manual mode and the MAX A/C indicator will turn off. **NOTE:** The MAX A/C setting is only available on the touchscreen.
A/C	**A/C Button** Press and release to change the current setting, the indicator illuminates when A/C is ON.
	Recirculation Button Press and release this button to change the system between recirculation mode and outside air mode. Recirculation can be used when outside conditions such as smoke, odors, dust, or high humidity are present. Recirculation can be used in all modes except for Defrost. Recirculation may be unavailable (button on the touchscreen greyed out) if conditions exist that could create fogging on the inside of the windshield. The A/C can be deselected manually without disturbing the mode control selection. Continuous use of the Recirculation mode may make the inside air stuffy and window fogging may occur. Extended use of this mode is not recommended.

Icon	Description
FRONT	**Front Defrost Button** Press and release to change the current airflow setting to Defrost mode. The indicator illuminates when this feature is ON. Air comes from the windshield and side window demist outlets. When the defrost button is selected, the blower level may increase. Use Defrost mode with maximum temperature settings for best windshield and side window defrosting and defogging. Performing this function will cause the ATC to switch into manual mode. If the front defrost mode is turned off the climate system will return the previous setting.
REAR	**Rear Defrost Button** Push and release the Rear Defrost Control button to turn on the rear window defroster and the heated outside mirrors (if equipped). An indicator will illuminate when the rear window defroster is on. The rear window defroster automatically turns off after ten minutes.
Rear Climate	**Rear Climate Control Button** Press and release this button to access the rear climate controls. The indicator will illuminate when the rear climate controls are on.
	Driver and Passenger Temperature UP and DOWN Buttons Provides the driver and passenger with independent temperature control. Push the red button on the faceplate or touchscreen or press and slide the temperature bar towards the red arrow button on the touchscreen for warmer temperature settings. Push the blue button on the faceplate or touchscreen or press and slide the temperature bar towards the blue arrow button on the touchscreen for cooler temperature settings.

Icon	Description
SYNC	**SYNC Button** Press the SYNC button on the touchscreen to toggle the Sync feature on/off. The SYNC indicator is illuminated when this feature is enabled. SYNC is used to synchronize the front and rear passenger temperature settings with the driver temperature setting. Changing the front or rear passenger temperature setting while in SYNC will automatically exit this feature. **NOTE:** The SYNC setting is only available on the touchscreen.
Blower Control Faceplate Knob **Touchscreen Buttons**	**Blower Control** Blower Control is used to regulate the amount of air forced through the climate system. There are seven blower speeds available. The speeds can be selected using either the blower control knob on the faceplate or the buttons on the touchscreen. • **Faceplate:** The blower speed increases as you turn the blower control knob clockwise from the lowest blower setting. The blower speed decreases as you turn the blower control knob counterclockwise. • **Touchscreen:** Use the small blower icon to reduce the blower setting and the large blower icon to increase the blower setting. Blower speed can also be selected by pressing the blower bar area between the icons.
Modes Control Faceplate Knob	**Modes Control** • **Faceplate:** Push the button in the center of the knob to change the airflow distribution mode. • **Touchscreen:** Select Mode by pressing one of the Mode Buttons on the touchscreen. The airflow distribution mode can be adjusted so air comes from the instrument panel outlets, floor outlets, defrost outlets and demist outlets. The Mode settings are as follows:

Icon	Description
Panel Mode	**Panel Mode** Air comes from the outlets in the instrument panel. Each of these outlets can be individually adjusted to direct the flow of air. The air vanes of the center outlets and outboard outlets can be moved up and down or side to side to regulate airflow direction. There is a shut off wheel located below the air vanes to shut off or adjust the amount of airflow from these outlets.
Bi-Level Mode	**Bi-Level Mode** Air comes from the instrument panel outlets and floor outlets. A slight amount of air is directed through the defrost and side window demister outlets. **NOTE:** Bi-Level mode is designed under comfort conditions to provide cooler air out of the panel outlets and warmer air from the floor outlets.
Floor Mode	**Floor Mode** Air comes from the floor outlets. A slight amount of air is directed through the defrost and side window demister outlets.

Icon	Description
Mix Mode	**Mix Mode** Air is directed through the floor, defrost, and side window demister outlets. This setting works best in cold or snowy conditions that require extra heat to the windshield. This setting is good for maintaining comfort while reducing moisture on the windshield.
OFF	**Climate Control OFF Button** Press and release this button to turn the Climate Control ON/OFF.

Controlling The Rear Climate Controls From The Front MTC Display/Touchscreen

The Three-Zone MTC system allows for adjustment of the rear climate controls from the front MTC display/touchscreen.

Uconnect 4 Front MTC Panel Rear Control Display

Uconnect 4C/4C NAV Front MTC Panel Rear Control Display

- Press the "REAR CLIMATE" button on the touchscreen to change control to rear control mode, Rear display appears. Control functions now operate rear system.
- To return to the Front screen on the Uconnect system, press the "Front Climate" button on the touchscreen.

To change the rear system settings:

Icon	Description
LOCK REAR	**Rear Lock Button** Press and release to lock out the rear manual temperature controls from adjusting the rear temperature and blower settings.

Icon	Description
FRONT CLIMATE	**Front Climate Button** Press and release this button to change the display on the Uconnect system back to the Front Climate Controls.
△ ▽	**Rear Passenger Temperature Up and Down Buttons** Provides the rear passengers with independent temperature control. Push the up arrow button on the touchscreen to increase the temperature. Push the down arrow button on the touchscreen to decrease the temperature. When the SYNC feature is active, the passenger's temperature moves up and down with the driver's temperature.
SYNC	**SYNC Button** Press the SYNC button on the touchscreen to toggle the SYNC feature on/off. The SYNC indicator is illuminated when this feature is enabled. SYNC is used to synchronize the front and rear passenger temperature settings with the driver temperature setting. Changing the front or rear passenger temperature setting while in SYNC exits this feature. **NOTE:** The SYNC setting is only available on the touchscreen.
▲▼	**Blower Control** Blower Control is used to regulate the amount of air forced through the climate system. There are seven blower speeds available. Adjusting the blower causes automatic mode to switch to manual operation. The speeds can be selected using the buttons on the touchscreen.

Icon	Description
REAR OFF	**Rear Passenger Climate Control OFF Button** Press and release this button to turn the Rear Climate Controls off.
Panel Mode	**Panel Mode** Press this button on the touchscreen to change the air distribution mode to Panel Mode. In Panel Mode, air comes from the outlets in the instrument panel. Each of these outlets can be individually adjusted to direct the flow of air. The air vanes of the center outlets and outboard outlets can be moved up and down or side to side to regulate airflow direction. There is a shut off wheel located below the air vanes to shut off or adjust the amount of airflow from these outlets.
Bi-Level Mode	**Bi-Level Mode** Press this button on the touchscreen to change the air distribution mode to Bi-Level Mode. In Bi-Level Mode, air comes from the instrument panel outlets and floor outlets. A slight amount of air is directed through the defrost and side window demister outlets. **NOTE:** Bi-Level mode is designed under comfort conditions to provide cooler air out of the panel outlets and warmer air from the floor outlets.
Floor Mode	**Floor Mode** Press this button on the touchscreen to change the air distribution mode to Floor Mode. In Floor Mode, air comes from the floor outlets. A slight amount of air is directed through the defrost and side window demister outlets.

Rear Manual Temperature Control

The rear MTC system has floor air outlets at the rear right side of the 3rd Row seats and overhead outlets at each outboard rear seating position. The system provides heated air through the floor outlets or cool, dehumidified air through the headliner outlets.

The rear system temperature control buttons are located on the headliner on the passenger side of the vehicle.

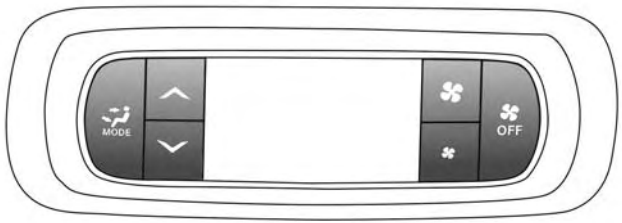

0313099958US

Rear Manual Climate Controls

Icon	Description
MODE	**Rear Mode Control** Push this button on the Rear Climate Hard Controls to change the air distribution mode for the rear passengers to one of the following:
Panel Mode	**Panel Mode** Air comes from the outlets in the headliner. Each of these outlets can be individually adjusted to direct the flow of air. Moving the air vanes of the outlets to one side will shut off the airflow.

Icon	Description
Bi-Level Mode	**Bi-Level Mode** Air comes from both the headliner outlets and the floor outlets. **NOTE:** In many temperature positions, the Bi-Level mode is designed to provide cooler air out of the headliner outlets and warmer air from the floor outlets.
Floor Mode	**Floor Mode** Air comes from the floor outlets.
	Rear Temperature Control • **Rear Passenger Temperature Up Button** To change the temperature in the rear of the vehicle, push temperature control up button to raise the temperature. The rear temperature settings are displayed in control head. • **Rear Passenger Temperature Down Button** To change the temperature in the rear of the vehicle, push temperature control down button to lower the temperature. The rear temperature settings are displayed in control head.
	Rear Blower Controls The rear blower control can be manually set to off, or any fixed blower speed by pushing the blower control buttons. This allows the rear seat occupants to control the volume of air circulated in the rear of the vehicle. The larger of the two icons increases blower speed, whereas the smaller of the two icons decreases the blower speed.

Icon	Description
OFF	**Rear Climate Control/Blower Off** To manually set the rear blower controls to off, press the Rear Climate Control/Blower Off button.

CAUTION!

Interior air enters the Rear Automatic Temperature Control System through an intake grille, located in floor under the passengers' seats. Do not block or place objects directly in front of the inlet grille or heater outlets. The electrical system could overload causing damage to the blower motor.

Automatic Uconnect 4 Climate Control Overview

Uconnect 4 With 7–inch Display Automatic Temperature Controls

Automatic Uconnect 4C/4C NAV Climate Control Overview

Uconnect 4C/4C With 8.4–inch Display NAV Automatic Climate Controls

Automatic Climate Control Descriptions

Icon	Description
MAX A/C	**MAX A/C Button** Press and release to change the current setting, the indicator illuminates when MAX A/C is ON. Performing this function again will cause the MAX A/C operation to switch into manual mode and the MAX A/C indicator will turn off. **NOTE:** The MAX A/C setting is only available on the touchscreen.
A/C	**A/C Button** Press and release to change the current setting, the indicator illuminates when A/C is ON.
	Recirculation Button Press and release this button to change the system between recirculation mode and outside air. Recirculation can be used when outside conditions such as smoke, odors, dust, or high humidity are present. Recirculation can be used in all modes. Recirculation may be unavailable (button on the touchscreen greyed out) if conditions exist that could create fogging on the inside of the windshield. The A/C can be deselected manually without disturbing the mode control selection. Continuous use of Recirculation mode may make the inside air stuffy and window fogging may occur. Extended use of this mode if not recommended.

Icon	Description
AUTO	**AUTO Button** Automatically controls the interior cabin temperature by adjusting airflow distribution and amount. Performing this function will cause the system to switch between manual mode and automatic modes. Refer to “Automatic Operation” within this section for more information.
FRONT	**Front Defrost Button** Press and release to change the current airflow setting to Defrost mode. The indicator illuminates when this feature is ON. Air comes from the windshield and side window demist outlets. When the defrost button is selected, the blower level may increase. Use Defrost mode with maximum temperature settings for best windshield and side window defrosting and defogging. Performing this function will cause the ATC to switch into manual mode. If the front defrost mode is turned off the climate system will return the previous setting.
REAR	**Rear Defrost Button** Push and release the Rear Defrost Control button to turn ON the rear window defroster and the heated outside mirrors (if equipped). An indicator will illuminate when the rear window defroster is ON. The rear window defroster automatically turns OFF after ten minutes.
Rear Climate	**Rear Climate Control Button** Press and release this button to access the rear climate controls. The indicator will illuminate when the rear climate controls are ON.

Icon	Description
△ ▽	**Driver And Passenger Temperature UP And DOWN Buttons** Provides the driver and passenger with independent temperature control. Push the red button on the faceplate or touchscreen or press and slide the temperature bar towards the red arrow button on the touchscreen for warmer temperature settings. Push the blue button on the faceplate or touchscreen or press and slide the temperature bar towards the blue arrow button on the touchscreen for cooler temperature settings.
SYNC	**SYNC Button** Press the Sync button on the touchscreen to toggle the Sync feature On/Off. The Sync indicator is illuminated when this feature is enabled. SYNC is used to synchronize the front and rear passenger temperature settings. Changing the front or rear passenger temperature setting while in SYNC will automatically exit this feature. **NOTE:** The SYNC setting is only available on the touchscreen.
Faceplate Knob **Touchscreen Buttons**	**Blower Control** Blower Control is used to regulate the amount of air forced through the climate system. There are seven blower speeds available. The speeds can be selected using either the blower control knob on the faceplate or the buttons on the touchscreen. • **Faceplate:** The blower speed increases as you turn the blower control knob clockwise from the lowest blower setting. The blower speed decreases as you turn the blower control knob counterclockwise. • **Touchscreen:** Use the small blower icon to reduce the blower setting and the large blower icon to increase the blower setting. Blower speed can also be selected by pressing the blower bar area between the icons.

Icon	Description
Modes Control	**Modes Control** The airflow distribution mode can be adjusted so air comes from the instrument panel outlets, floor outlets, defrost outlets and demist outlets. The Mode settings are as follows: **Faceplate:** Push the button in the center of the knob to change the airflow distribution mode. **Touchscreen:** Select Mode by pressing one of the Mode Buttons on the touchscreen.
Panel Mode	**Panel Mode** Air comes from the outlets in the instrument panel. Each of these outlets can be individually adjusted to direct the flow of air. The air vanes of the center outlets and outboard outlets can be moved up and down or side to side to regulate airflow direction. There is a shut off wheel located below the air vanes to shut off or adjust the amount of airflow from these outlets.
Bi-Level Mode	**Bi-Level Mode** Air comes from the instrument panel outlets and floor outlets. A slight amount of air is directed through the defrost and side window demister outlets. **NOTE:** Bi-Level mode is designed under comfort conditions to provide cooler air out of the panel outlets and warmer air from the floor outlets.
Floor Mode	**Floor Mode** Air comes from the floor outlets. A slight amount of air is directed through the defrost and side window demister outlets.

Icon	Description
Mix Mode	**Mix Mode** Air is directed through the floor, defrost, and side window demister outlets. This setting works best in cold or snowy conditions that require extra heat to the windshield. This setting is good for maintaining comfort while reducing moisture on the windshield.
OFF	**Climate Control OFF Button** Press and release this button to turn the Climate Control ON/OFF.

Controlling The Rear Climate Controls From The Front ATC Panel—If Equipped

The Three-Zone ATC system allows for adjustment of the rear climate controls from the front ATC panel.

To change the rear system settings:

- Press the "REAR CLIMATE" button on the touchscreen to change control to rear control mode, Rear display appears. Control functions now operate rear system.
- To return to the Front screen on the Uconnect system, press the "Front Climate" or "Done" button on the touchscreen.

Uconnect 4 Front ATC Panel Rear Control Display

Uconnect 4C/4C NAV Front ATC Panel Rear Control Display

Icon	Description
REAR AUTO	**Rear Auto Button** Automatically controls the rear interior cabin temperature by adjusting airflow distribution and amount. Performing this function causes the system to switch between manual mode and automatic modes. Refer to "Automatic Operation" within this section for more information.
LOCK REAR	**Rear Lock Button** Press and release to lock out the rear manual temperature controls from adjusting the rear temperature and blower settings.

Icon	Description
FRONT CLIMATE	**Front Climate Button** Press and release this button to change the display on the Uconnect system back to the Front Climate Controls.
△ ▽	**Rear Passenger Temperature Up And Down Buttons** Provides the front occupants with the ability to control the rear temperature. Push the up arrow button on the touchscreen to increase the temperature. Push the down arrow button on the touchscreen to decrease the temperature. When the SYNC feature is active, the passenger's temperature will move up and down with the driver's temperature.
SYNC	**SYNC Button** Press the SYNC button on the touchscreen to toggle the SYNC feature on/off. The SYNC indicator is illuminated when this feature is enabled. SYNC is used to synchronize the front and rear passenger temperature settings with the driver temperature setting. Changing the front or rear passenger temperature/mode/blower settings while in SYNC will automatically exit this feature. **NOTE:** The SYNC setting is only available on the touchscreen.
▲▼	**Blower Control** Blower Control is used to regulate the amount of air forced through the climate system. There are seven blower speeds available. Adjusting the blower causes automatic mode to switch to manual operation. The speeds can be selected using the buttons on the touchscreen.

Icon	Description
REAR OFF	**Rear Passenger Climate Control OFF Button** Press and release this button to turn the Rear Climate Controls off.
Panel Mode	**Panel Mode** Press this button on the touchscreen to change the air distribution mode to Panel Mode. In Panel Mode, air comes from the outlets in the headliner. Each of these outlets can be individually adjusted to direct the flow of air. Moving the air vanes of the outlets to one side will shut off the airflow.
Bi-Level Mode	**Bi-Level Mode** Press this button on the touchscreen to change the air distribution mode to Bi-Level Mode. In Bi-Level Mode, air comes from both the headliner outlets and the floor outlets. **NOTE:** Bi-Level mode is designed under comfort conditions to provide cooler air out of the panel outlets and warmer air from the floor outlets.
Floor Mode	**Floor Mode** Press this button on the touchscreen to change the air distribution mode to Floor Mode. In Floor Mode, air comes from the floor outlets.

Rear Automatic Temperature Control (ATC) — If Equipped

The rear ATC system has floor air outlets underneath the passengers' seats, and overhead outlets at each outboard rear seating position. The system provides heated air through the floor outlets or cool, dehumidified air through the headliner outlets.

Rear second row occupants can only adjust the rear ATC control when the Rear Temperature Lock button is turned off.

The rear ATC system is located in the headliner, on the passenger side of the vehicle.

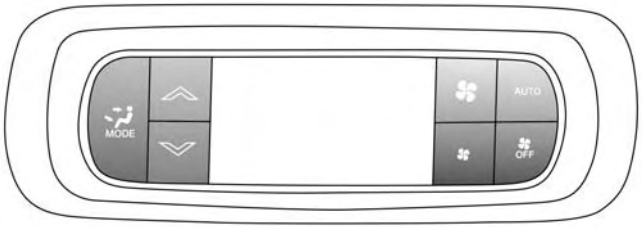

0313100145US

Rear Automatic Climate Controls

1. Adjust the rear blower, rear temperature and the rear modes to suit your comfort needs.
2. ATC is selected by pushing the AUTO button.

Once the desired temperature is displayed, the ATC System will automatically achieve and maintain that comfort level. When the system is set up for your comfort level, it is not necessary to change the settings. You will experience

the greatest efficiency by simply allowing the system to function automatically.

NOTE:

- It is not necessary to move the temperature settings. The system automatically adjusts the temperature, mode and fan speed to provide comfort as quickly as possible.

Icon	Description
MODE	**Rear Mode Control** Push this button on the Rear Climate Hard Controls to change the air distribution mode for the rear passengers to one of the following:
Panel Mode	**Panel Mode** Air comes from the outlets in the headliner. Each of these outlets can be individually adjusted to direct the flow of air. Moving the air vanes of the outlets to one side will shut off the airflow.
Bi-Level Mode	**Bi-Level Mode** Air comes from both the headliner outlets and the floor outlets. **NOTE:** In many temperature positions, the Bi-Level mode is designed to provide cooler air out of the headliner outlets and warmer air from the floor outlets.

Icon	Description
Floor Mode	**Floor Mode** Air comes from the floor outlets.
	Rear Temperature Control • **Rear Passenger Temperature Up Button** To change the temperature in the rear of the vehicle, push temperature control up button to raise the temperature. The rear temperature settings are displayed in control head. • **Rear Passenger Temperature Down Button** To change the temperature in the rear of the vehicle, push temperature control down button to lower the temperature. The rear temperature settings are displayed in control head.
	Rear Blower Control The rear blower control can be manually set to off, or any fixed blower speed by pushing the blower control buttons. This allows the rear seat occupants to control the volume of air circulated in the rear of the vehicle. The larger of the two icons increases blower speed, whereas the smaller of the two icons decreases the blower speed.

Icon	Description
AUTO	**AUTO Button** Automatically controls the interior cabin temperature by adjusting airflow distribution and amount. Performing this function will cause the system to switch between manual mode and automatic modes. Refer to "Automatic Operation" within this section for more information.
OFF	**Rear Climate Control/Blower Off** To manually set the rear blower controls to off, press the Rear Climate Control/Blower Off button.

Climate Control Functions

Air Conditioning (A/C)

The Air Conditioning (A/C) button allows the operator to manually activate or deactivate the air conditioning system. When in A/C mode with the ATC set to a cool temperature, dehumidified air flows through the air outlets. If Economy mode is desired, push the A/C button to turn off the A/C mode in the ATC display and deactivate the A/C system.

NOTE:

- If the system is in Mix or Defrost Mode, the A/C can be turned off, but the A/C system shall remain active to prevent fogging of the windows.
- If not operating in AUTO mode, the system will not automatically sense the presence of fog, mist or ice on the windshield. Defrost Mode must be manually selected to clear the windshield and side glass.
- If fog or mist appears on the windshield or side glass, select Defrost Mode and adjust blower speed if needed.

Recirculation For Automatic Temperature Control

When outside air contains smoke, odors, or high humidity, or if rapid cooling is desired, you may wish to recirculate interior air by pressing the Recirculation control button. The recirculation indicator will illuminate when this button is selected. Press the button a second time to turn off the Recirculation mode and allow outside air into the vehicle.

NOTE: In cold weather, use of recirculation mode may lead to excessive window fogging. The recirculation feature may be unavailable (button on the touchscreen greyed out) if conditions exist that could create fogging on the inside of the windshield. On systems with Manual Climate Controls, the Recirculation mode is not allowed in Defrost mode to improve window clearing operation. Recirculation will be disabled automatically if this mode is selected. Attempting to use Recirculation while in this mode will cause the LED in the control button to blink and then turn off.

Automatic Temperature Control (ATC) — If Equipped

Automatic Operation

1. Push the AUTO button on the faceplate, or the AUTO button on the touchscreen on the Automatic Temperature Control (ATC) Panel.
2. Next, adjust the temperature you would like the system to maintain by adjusting the driver and passenger temperature control buttons. Once the desired temperature is displayed, the system will achieve and automatically maintain that comfort level.
3. When the system is set up for your comfort level, it is not necessary to change the settings. You will experience the greatest efficiency by simply allowing the system to function automatically.

NOTE:

- It is not necessary to move the temperature settings for cold or hot vehicles. The system automatically adjusts the temperature, mode, and blower speed to provide comfort as quickly as possible.
- The temperature can be displayed in U.S. or Metric units by selecting the US/Metric customer-programmable feature. Refer to the “Uconnect Settings” in “Multimedia” for further information.

To provide you with maximum comfort in the Automatic mode during cold start-ups, the blower fan will remain on low until the engine warms up. The blower will increase in speed and transition into Auto mode.

Manual Operation Override

This system offers a full complement of manual override features. The AUTO symbol in the front ATC display will be turned off when the system is being used in the manual mode.

Operating Tips

NOTE: Refer to the chart at the end of this section for suggested control settings for various weather conditions.

Summer Operation

The engine cooling system must be protected with a high-quality antifreeze coolant to provide proper corrosion protection and to protect against engine overheating. OAT coolant (conforming to MS.90032) is recommended. Refer to "Fluids And Lubricants" in "Technical Specifications" for proper coolant selection.

Winter Operation

To ensure the best possible heater and defroster performance, make sure the engine cooling system is functioning properly and the proper amount, type, and concentration of coolant is used. Refer to "Fluids And Lubricants" in "Technical Specifications" for proper coolant selection. Use of the air Recirculation mode during Winter months is not recommended, because it may cause window fogging.

Vacation/Storage

Before you store your vehicle, or keep it out of service (i.e., vacation) for two weeks or more, run the air conditioning system at idle for about five minutes, in fresh air with the blower setting on high. This will ensure adequate system lubrication to minimize the possibility of compressor damage when the system is started again.

Window Fogging

Vehicle windows tend to fog on the inside in mild, rainy, and/or humid weather. To clear the windows, select Defrost or Mix mode and increase the front blower speed. Do not use the Recirculation mode without A/C for long periods, as fogging may occur.

CAUTION!

Failure to follow these cautions can cause damage to the heating elements:

- **Use care when washing the inside of the rear window. Do not use abrasive window cleaners on the**

(Continued)

CAUTION! *(Continued)*

interior surface of the window. Use a soft cloth and a mild washing solution, wiping parallel to the heating elements. Labels can be peeled off after soaking with warm water.

- **Do not use scrapers, sharp instruments, or abrasive window cleaners on the interior surface of the window.**
- **Keep all objects a safe distance from the window.**

Outside Air Intake

Make sure the air intake, located directly in front of the windshield, is free of obstructions such as leaves. Leaves collected in the air intake may reduce airflow, and if they enter the plenum, they could plug the water drains. In winter months, make sure the air intake is clear of ice, slush, and snow.

A/C Air Filter

The climate control system filters out dust and pollen from the air. Refer to an authorized dealer for filter replacement instructions.

Operating Tips Chart

WEATHER	CONTROL SETTINGS
Hot weather and vehicle interior is very hot	Set the mode control to , on, and blower on high. Roll down the windows for a minute to flush out the hot air. Once comfort is achieved adjust controls for comfort.
Warm weather	Turn on and set the mode control to the position.
Cool Sunny	Operate in position.
Cool & Humid conditions	Set the mode control to and turn on to keep windows clear.
Cold Weather	Set the mode control to the position. If windshield fogging starts to occur, move the control towards the position.

8000cb71

WINDOWS

Power Windows

You can control either the front or rear windows using controls located on the driver's door trim panel.

The driver may lock out the rear power windows by pushing the bar control just below the power window controls.

The controls will operate only when the ignition switch is in the ON/RUN or ACC position and during power accessory delay.

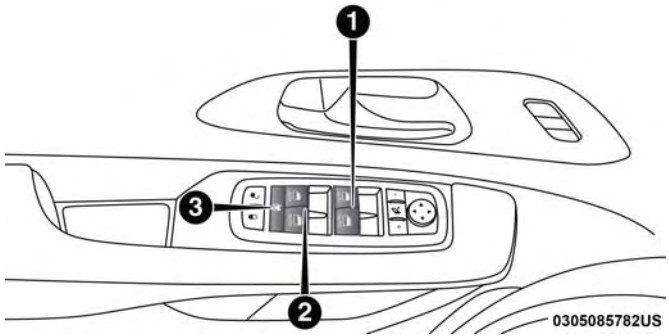

Driver's Power Window Controls

1 — Front Driver And Passenger Window Controls
2 — Rear Passenger Window Controls
3 — Power Window Lockout Switch — If Equipped

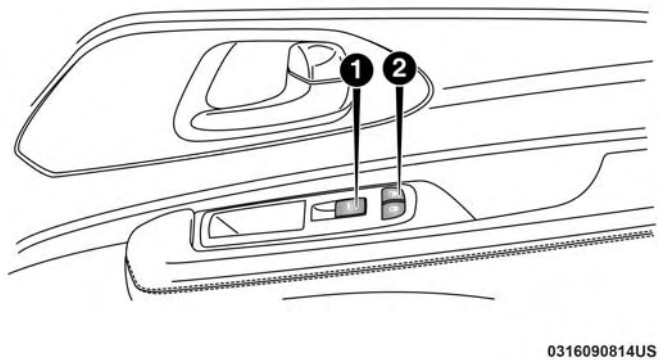

Front Passenger Power Door Controls

1 — Window Open/Close
2 — Power Door Locks

NOTE: Power Window controls will also remain active for up to 10 minutes after the ignition switch has been turned to OFF, depending upon the accessory delay setting. Opening a front door will cancel this feature.

There is a single control on the front passenger's door trim panel which operates the passenger door window and a set of controls that lock and unlock all doors. The controls will operate only when the ignition switch is in the ON/RUN or ACC position and during power accessory delay.

Auto Up Feature With Anti-Pinch Protection — If Equipped

The front driver and front passenger controls may be equipped with an Auto Up feature. Lift the window control fully upward to the second detent, release, and the window will go up automatically.

To stop the window from going all the way up during the Auto Up operation, push down on the control briefly.

To close the window part way, lift the window control to the first detent and release when you want the window to stop.

NOTE:

- If the window runs into any obstacle during auto-closure, it will reverse direction and then go back down. Remove the obstacle and use the window control again to close the window.
- Any impact due to rough road conditions may trigger the auto reverse function unexpectedly during auto-closure. If this happens, pull the control lightly to the first detent and hold to close window manually.

WARNING!

There is no anti-pinch protection when the window is almost closed. To avoid personal injury be sure to clear your arms, hands, fingers and all objects from the window path before closing.

Auto Up Reset — If Equipped

To reactivate the Auto Up feature, perform the following steps after vehicle power is restored:

1. Pull the window control up to close the window completely and continue to hold the control up for an additional two seconds after the window is closed.
2. Push the window control down firmly to the second detent to open the window completely and continue to hold the control down for an additional two seconds after the window is fully open.

Sliding Side Door Power Window Control — If Equipped

Second row passengers may open and close the sliding door window by a single control on the door handle assembly.

The controls will operate only when the ignition switch is in the ON/RUN or ACC position and during power accessory delay.

NOTE: The controls will not operate if the driver has activated the Power Window Lockout.

Sliding Door Power Window Control

NOTE: The sliding door windows do not fully open, stopping several inches above the window sill.

Wind Buffeting

Wind buffeting can be described as the perception of pressure on the ears or a helicopter-type sound in the ears.

Your vehicle may exhibit wind buffeting with the windows down, or the sunroof (if equipped) in certain open or partially open positions. This is a normal occurrence and can be minimized. If the rear windows are open and buffeting occurs, open the front and rear windows together to minimize the buffeting. If the buffeting occurs with the sunroof open, adjust the sunroof opening to minimize the buffeting.

PANORAMIC SUNROOF — IF EQUIPPED

The Panoramic Sunroof switch is located to the left between the sun visors on the overhead console.

The Power Shade switch is located to the right between the sun visors on the overhead console.

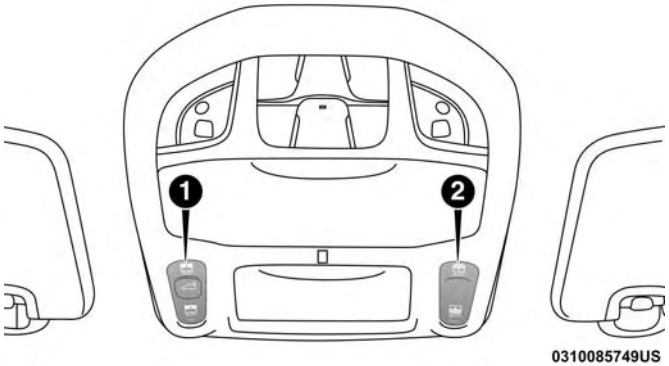

Panoramic Sunroof And Power Shade Switches

1 — Sunroof Switch
2 — Power Shade Switch

WARNING!

- **Never leave children unattended in a vehicle, or with access to an unlocked vehicle. Never leave the key fob in or near the vehicle, or in a location accessible to children. Do not leave the ignition of a vehicle equipped with Keyless Enter-N-Go in the ACC or**

(Continued)

WARNING! ***(Continued)***

ON/RUN mode. Occupants, particularly unattended children, can become entrapped by the power sunroof while operating the power sunroof switch. Such entrapment may result in serious injury or death.

- **In a collision, there is a greater risk of being thrown from a vehicle with an open sunroof. You could also be seriously injured or killed. Always fasten your seat belt properly and make sure all passengers are also properly secured.**
- **Do not allow small children to operate the sunroof. Never allow your fingers, other body parts, or any object, to project through the sunroof opening. Injury may result.**

Opening Sunroof

Express Mode

Push the switch rearward and release it within one second. The sunroof will open automatically from any position and stop at the full open position. This is called "Express Open." During Express Open operation, any other actuation of the sunroof switch will stop the sunroof.

NOTE: If the sunshade is in the closed position when the open switch is pushed, the sunshade will automatically cycle to the halfway open position prior to the sunroof opening.

Manual Mode

Push and hold the switch rearward and the sunroof will open to the full open position. Any release of the switch will stop the movement. The sunroof will remain in a partially opened condition until the sunroof switch is pushed again.

Venting Sunroof — Express

Push and release the "Vent" button within one second and the sunroof will open to the vent position. This is called "Express Vent", and it will occur regardless of sunroof position.

NOTE: If the sunshade is in the closed position when the vent switch is pushed, the sunshade will automatically cycle to the halfway open position prior to the sunroof opening to the Vent position.

Closing Sunroof

Express Mode

Push the switch forward and release it within one second and the sunroof will close automatically from any position. The sunroof will close fully and stop automatically. This is called "Express Close." During Express Close operation, any other actuation of the switch will stop the sunroof.

Manual Mode

To close the sunroof, push and hold the switch in the forward position. Any release of the switch will stop the movement and the sunroof will remain in a partially closed condition until the sunroof switch is pushed again.

Wind Buffeting

Wind buffeting can be described as the perception of pressure on the ears or a helicopter-type sound in the ears. Your vehicle may exhibit wind buffeting with the windows down, or the sunroof (if equipped) in certain open or partially open positions. This is a normal occurrence and can be minimized. If the buffeting occurs with the rear windows open, open the front and rear windows together to minimize the buffeting. If the buffeting occurs with the sunroof open, adjust the sunroof opening to minimize the buffeting or open any window.

Power Sun Shade — If Equipped

The sunshade has two programmed open positions: half-open and full-open. When opening the sunshade from the closed position, the sunshade will always stop at the half-open position regardless of express or manual open operation. The switch must be actuated again to continue to the full-open position.

Opening Power Shade — Express Mode

Push the sunshade switch rearward and release it within one second and the sunshade will open to the half-open position and stop automatically. Push and release the switch again from the half-open position and the sunshade will open to the full-open position and stop automatically. This is called "Express Open." During Express open operation, any movement of the sunshade switch will stop the shade.

Opening Power Shade — Manual Mode

Push and hold the sunshade switch rearward and the shade will open to the half-open position and stop automatically. Push and hold the sunshade switch rearward again and the shade will open automatically to the full-open position. Any release of the switch will stop the

movement and the sunshade will remain in a partially opened condition until the switch is pushed again.

Closing Power Shade — Express Mode

Push the switch forward and release it within one second and the shade will close automatically from any position. If the sunroof is completely closed the shade will close fully and stop automatically. This is called "Express Close". During Express Close operation, any other actuation of the switch will stop the shade.

NOTE: If the sunroof is open, the shade will close to the half-open position. Pushing the shade close button again will automatically close both the sunroof and shade completely.

Closing Power Shade — Manual Mode

To close the shade, push and hold the switch in the forward position. Any release of the switch will stop the movement and the shade will remain in a partially closed condition until the switch is pushed again.

Pinch Protect Feature

This feature will detect an obstruction in the closing of the sunroof during the Express Close operation. If an obstruction in the path of the sunroof is detected, the sunroof will automatically retract. Remove the obstruction if this occurs.

NOTE: If three consecutive sunroof close attempts result in Pinch Protect reversals, Pinch Protect will disable and the sunroof must be closed in Manual Mode.

Sunroof Maintenance

Use only a non-abrasive cleaner and a soft cloth to clean the glass panel.

Ignition Off Operation

The power sunroof switch will remain active for up to approximately 10 minutes after the ignition switch is turned to the OFF/LOCK position. Opening either front door will cancel this feature.

NOTE: Ignition Off time is programmable through the Uconnect System. Refer to "Uconnect Settings" in "Multimedia" for further information.

HOOD

Opening

The hood release lever (to open the primary latch) and safety latch (to open the secondary latch) must be released to open the hood.

1. Pull the hood release lever located under the driver's side of the instrument panel.

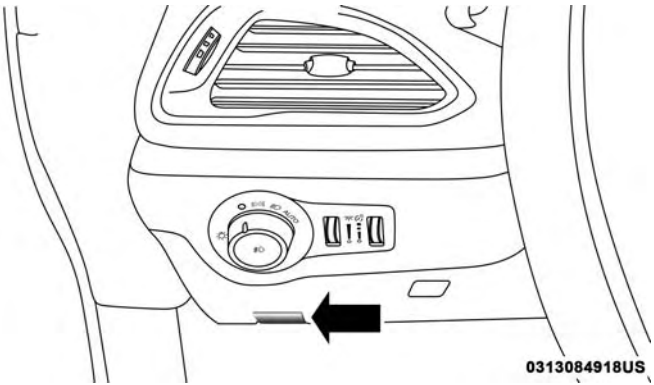

Hood Release Lever

2. Move to the outside of the front of the vehicle.
3. Push the safety latch release lever toward the passenger side of the vehicle. The safety latch is located behind the center front edge of the hood.

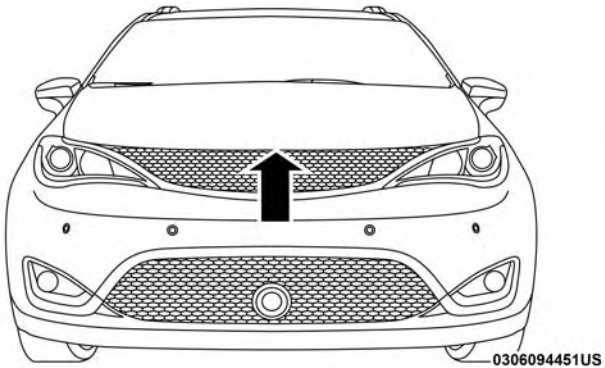

Safety Latch Release Lever Location

4. Remove the support rod from the locking tab and insert it into the seat located on the underside of the hood.

NOTE:

- Before lifting the hood, check that the wiper arms are not in motion and not in the lifted position.
- While lifting the hood, use both hands.
- Vehicle must be at a stop and the transmission must be in PARK.

Closing

1. Hold up the hood with one hand and with the other hand remove the support rod from its seat and reinsert it into the locking tab.
2. Lower the hood to approximately 12 inches (30 cm) from the engine compartment and drop it. Make sure that the hood is completely closed.

WARNING!

Be sure the hood is fully latched before driving your vehicle. If the hood is not fully latched, it could open when the vehicle is in motion and block your vision. Failure to follow this warning could result in serious injury or death.

CAUTION!

To prevent possible damage, do not slam the hood to close it. Lower hood to approximately 12 inches (30 cm) and drop the hood to close. Make sure hood is fully closed for both latches. Never drive vehicle unless hood is fully closed, with both latches engaged.

LIFTGATE

Opening

To Unlock/Enter The Liftgate

The liftgate may be released in several ways:

- Overhead console liftgate button
- Key fob
- Outside handle

Push the liftgate button on the key fob twice within five seconds to release the liftgate.

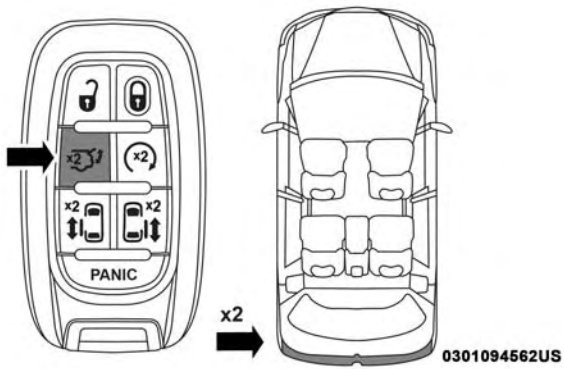

Unlock Liftgate Using Key Fob

The key fob and the overhead console button will release the liftgate when the liftgate is locked. The outside handle requires the liftgate to be unlocked. If the vehicle is equipped with Passive Entry, pulling the outside handle will unlock and release the liftgate, with a valid Passive Entry key fob within 5 ft (1.5 m) of the liftgate.

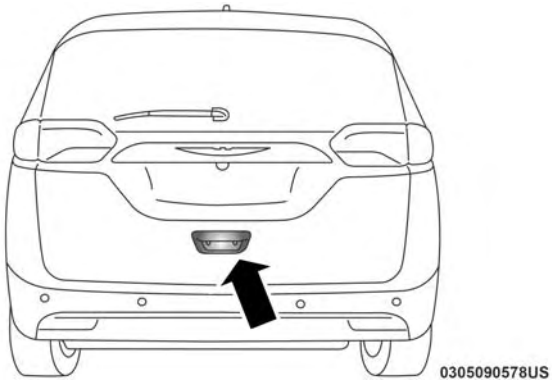

Unlock Liftgate Using Passive Entry

NOTE: If 1st Press of key fob Unlocks "All Doors" is programmed in Uconnect Settings, all doors will unlock with a Passive Entry handle activation. If 1st Press of key fob Unlocks "Driver Door" is programmed in Uconnect Settings, the liftgate will only unlock with handle activation. Refer to "Uconnect Settings" in "Multimedia" for further information.

Closing

To Close The Liftgate

Grasp the liftgate closing handle and initiate lowering the liftgate. Release the handle when the liftgate takes over the closing effort.

To Lock The Vehicle

With a valid Passive Entry key fob within 5 ft (1.5 m) of the liftgate, pushing the passive entry lock button located to the right of the outside handle will lock the vehicle.

WARNING!

- **Driving with the liftgate open can allow poisonous exhaust gases into your vehicle. You and your passengers could be injured by these fumes. Keep the liftgate closed when you are operating the vehicle.**
- **If you are required to drive with the liftgate open, make sure that all windows are closed, and the climate control blower switch is set at high speed. Do not use the recirculation mode.**

Power Liftgate — If Equipped

The power liftgate may be opened or closed in several ways:

- Overhead console liftgate button
- Key fob
- Outside handle (opens liftgate only)
- Button just inside the liftgate on the upper left trim (when liftgate is open)
- Hands-Free Liftgate (opens liftgate only) — If Equipped

Using the above ways:

- When the liftgate is fully closed, the liftgate will open
- When the liftgate is fully open, the liftgate will close
- When the liftgate is moving, the liftgate will reverse

Push the Power Liftgate button on the Overhead Console to open or close the liftgate.

Push the liftgate button on the key fob twice within five seconds to open or close the liftgate.

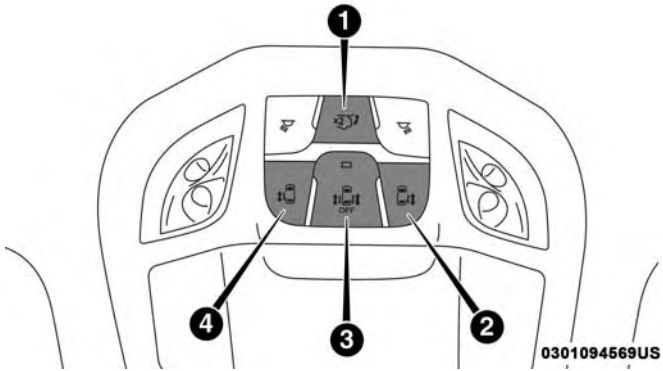

Overhead Console Power Switches

1 — Liftgate
2 — Right Sliding Door
3 — Sliding Door Power Off
4 — Left Sliding Door

The key fob and the overhead console button will operate the liftgate when the liftgate is locked. The outside handle requires the liftgate to be unlocked. If the vehicle is equipped with Passive Entry, depressing the touch pad on the outside handle or Hands-Free Liftgate foot activation

(if equipped) will unlock and open the liftgate, with a valid Passive Entry key fob within 5 ft (1.5 m) of the liftgate handle.

NOTE:

- To open the liftgate, the Hands-Free Liftgate foot activation (if equipped) requires a valid Passive Entry key fob within 5 ft (1.5 m) of the door handle.
- If 1st Press of key fob Unlocks "All Doors" is programmed in Uconnect Settings, all doors will unlock with a Passive Entry hands-free activation. If 1st Press of key fob Unlocks "Driver Door" is programmed in Uconnect Settings, the liftgate will only unlock with hands-free activation.
- Tones are sounded and the turn signals are flashed with liftgate movements. These alerts can be turned on or off in Uconnect Settings.
- Refer to "Uconnect Settings" in "Multimedia" for further information.

To Close The Liftgate

The liftgate can also be closed using the Rear Interior Power Liftgate button (if equipped), located in the upper left trim in the liftgate opening.

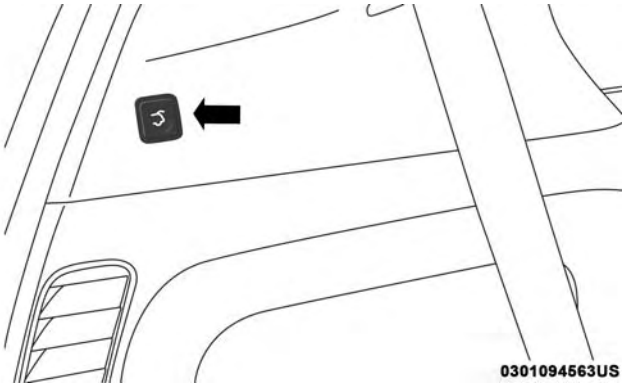

Rear Interior Power Liftgate Switch

Lock The Vehicle

With a valid Passive Entry key fob within 5 ft (1.5 m) of the liftgate, pushing the passive entry lock button located to the right of the outside handle will lock the vehicle.

Hands-Free Liftgate — If Equipped

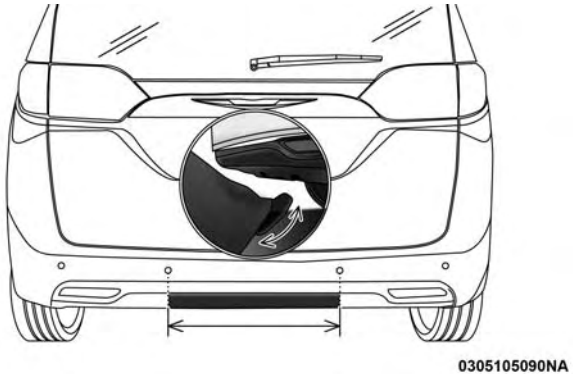

Hands-Free Liftgate Activation Zone

To open the liftgate using hands-free activation, use a straight in and out kicking motion under the vehicle activation zone in the general location below the liftgate door handle. Do not move your foot sideways or in a sweeping motion or the sensors may not detect the motion.

Vehicles Equipped With A Trailer Tow Package

NOTE: If your vehicle is equipped with the Trailer Tow Package, the hands-free activation zone(s) for the Power Liftgate will be located on the left and right side of the receiver. Use a straight kicking motion under either activation zone to open the Hands-Free Liftgate.

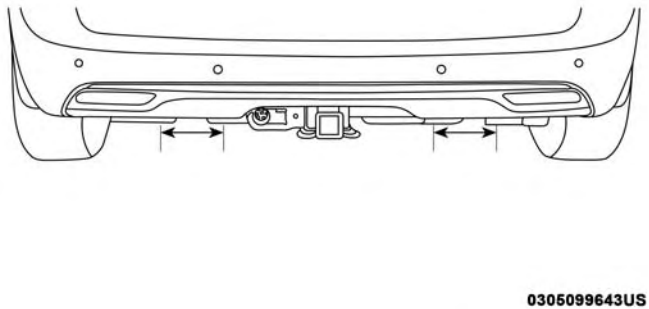

Hands-Free Liftgate Trailer Tow Activation Zones

When a valid kicking motion is completed, the liftgate will chime, the hazard lights will flash and the liftgate will open after approximately one second. This assumes all options are enabled in the radio.

NOTE: To open the Hands-Free Liftgate requires a valid Passive Entry key fob within 5 ft (1.5 m) of the door handle. If a valid Passive Entry key fob is not within 5 ft (1.5 m), the liftgate will not respond to any kicks.

CAUTION!

The Hands-Free Liftgate feature may be turned on or off in Uconnect Settings. Refer to "Uconnect Settings" in "Multimedia" for further information. The Hands-Free Liftgate feature should be turned off during Jacking, Tire Changing, and Vehicle Service.

NOTE:

- The Hands-Free Liftgate will only operate when the transmission is in PARK.
- If anything obstructs the Hands-Free liftgate while it is opening or closing, the liftgate will automatically reverse to the closed position, provided it meets sufficient resistance.
- There are pinch sensors attached to the side of the liftgate opening. Light pressure anywhere along these strips will cause the liftgate to return to the open position.
- If the power liftgate encounters multiple obstructions within the same cycle, the system will automatically stop. If this occurs, the liftgate must be operated manually.
- The power liftgate will release, but not power open, in temperatures below –12° F (–24° C). Be sure to remove any buildup of snow or ice from the liftgate before opening the liftgate.
- If the liftgate is left open for an extended period of time, the liftgate may need to be closed manually to reset power liftgate functionality.

WARNING!

- **Driving with the liftgate open can allow poisonous exhaust gases into your vehicle. You and your passengers could be injured by these fumes. Keep the liftgate closed when you are operating the vehicle.**
- **If you are required to drive with the liftgate open, make sure that all windows are closed, and the climate control blower switch is set at high speed. Do not use the recirculation mode.**

Gas props support the liftgate in the open position. However, because the gas pressure drops with temperature, it may be necessary to assist the props when opening the liftgate in cold weather.

NOTE: Allow the power system to open the liftgate. Manually pushing or pulling the liftgate may activate the liftgate obstacle detection feature and stop the power operation or reverse its direction.

WARNING!

During power operation, personal injury or cargo damage may occur. Ensure the liftgate travel path is clear. Make sure the liftgate is closed and latched before driving away.

Cargo Area Features

Cargo Area Storage

When the third row seats are not in the stowed position, there is a large area for cargo storage.

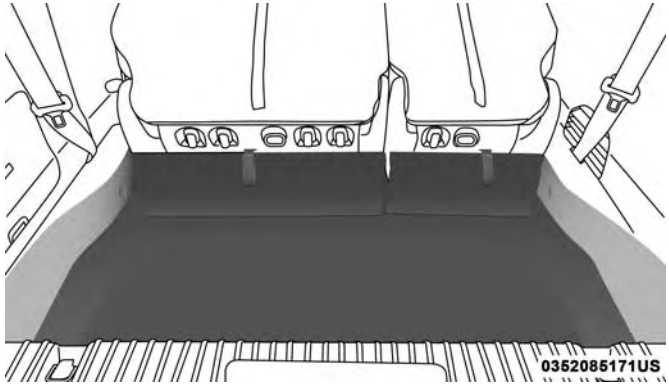

Rear Cargo Area

NOTE: With all rear seats stowed or removed, 4 x 8 ft (1.2 x 2.4 m) sheets of building material will fit on the vehicle floor with the liftgate closed. The front seats must be moved slightly forward of the rearmost position.

Stow 'n Vac Integrated Vacuum — If Equipped

Your vehicle may be equipped with an integrated vacuum system. This vacuum is for in-vehicle use only and should only be used on dry materials and on in-vehicle surfaces. It is located in the rear trim panel behind the sliding door on the driver's side of the vehicle.

IMPORTANT SAFETY INSTRUCTIONS

Read all instructions before using. When using your vacuum, basic precautions should be followed, including the following:

WARNING!

- **Never leave children alone in a vehicle, or with access to an unlocked vehicle. Allowing children to be in a vehicle unattended is dangerous for a number of reasons. A child or others could be seriously or fatally injured. Children should be warned not to touch the parking brake, brake pedal or the gear selector.**
- **Do not leave the key fob in or near the vehicle, or in a location accessible to children, and do not leave the ignition of a vehicle equipped with Keyless Enter-N-Go in either ACC mode or engine running (ON) unless you are using the vacuum system. Be aware a child could operate power windows, other controls, or move the vehicle when the vacuum system is in use. ALWAYS push ignition button to place ignition in the OFF mode when finished using the vacuum system.**

WARNING!

To reduce the risk of fire, serious injury or death:

- **Do not use vacuum while vehicle is in motion or while driving.**

- **Do not vacuum wet surfaces or any liquids.**
- **Do not use to vacuum up anything outside of the vehicle.**
- **Do not vacuum any flammable liquids, such as gasoline, or use around explosive vapors. Vapors from flammable liquids may form an explosive mixture with air and can be ignited by heat, sparks, or flames. Vapors may travel to a source of ignition and explode.**

- **Do not vacuum anything that is burning or smoking, such as cigarettes, matches, or hot ashes/embers.**

(Continued)

WARNING! *(Continued)*

- **Do not allow to be used as a toy. Close attention is necessary when used by or near children.**
- **Do not leave the vacuum running while unattended.**
- **Use only as described in this manual. Use only attachments provided with your vehicle.**
- **Do not put any object into openings. Do not use with any opening blocked; keep free of dust, lint, hair, and anything that may reduce air flow.**
- **Do not vacuum toxic material such as chlorine bleach, ammonia, drain cleaner, etc.**
- **Do not vacuum hard or sharp objects such as glass, nails, screws, coins, etc.**
- **Keep hair, loose clothing, fingers, and all parts of body away from openings and moving parts.**
- **Only use with filter in place. Periodically check that the filter is in place and in good condition.**

WARNING!

This equipment incorporates parts such as switches, motors, or the like that tend to produce arcs or sparks that can cause an explosion. When using your vacuum

(Continued)

WARNING! *(Continued)*

near gasoline-dispensing equipment or service stations, park vehicle at least 20 ft (6 m) away from the exterior enclosure of any dispensing pump. The vacuum is mounted more than 18 inches (45 cm) above ground level in your vehicle.

1. Before Using Vacuum:

Accessory (ACC) Mode Operation - For up to 10 minutes of operation

Always apply the parking brake, shift the transmission into PARK, and push ignition button to place ignition in Accessory (ACC) mode. The engine will not be running in this mode. Do not leave the key fob in or near the vehicle, or in a location accessible to children.

NOTE: The vacuum system will run for 10 minutes off battery power and then the vacuum will shut down. A low battery indication light (LOW PWR) located below the vacuum nozzle storage location will come on one minute before the vacuum shuts down.

Engine Running (ON) Operation - For more than 10 minutes of operation

- Position vehicle outdoors and fully open all side windows.
- Always apply the parking brake, shift the transmission into PARK, and leave engine running.

WARNING!

Carbon monoxide (CO) in exhaust gases can cause serious injury or death. Follow the precautions below to prevent carbon monoxide poisoning:

- **Do not inhale exhaust gases.**
- **Do not start or run an engine in a closed garage or confined area. Always position vehicle outdoors and fully open all side windows before using vacuum system with the engine running.**
- **Guard against carbon monoxide with proper maintenance. Have the exhaust system inspected every time the vehicle is raised. Have any abnormal conditions repaired promptly.**

2. Unclip the vacuum nozzle and pull to extend vacuum hose from the storage location.

NOTE: The hose can reach every corner of the vehicle floor.

3. Install desired attachment if needed.

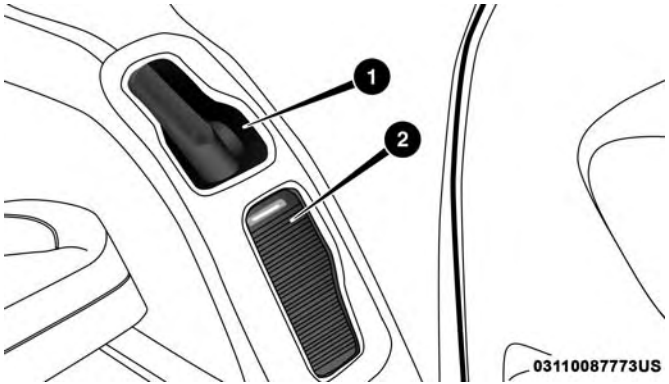

Front Storage Compartments

1 — Vacuum Nozzle Storage Location
2 — Attachment Compartment

NOTE: To access crevice or upholstery attachments, open the front Attachment Compartment.

- Crevice Tool — Able to reach into tight spaces including the seat latches located in the floor.
- Upholstery Tool — Use to agitate dirt and debris from carpets and seats. This tool can also be used to pick up pet hair.

- Hose Extension — Use to add another 12 ft (3.6 m) of usable length to the vacuum hose. Hose extension is located in the upper access panel behind the third row seat on the driver's side.

4. Push vacuum On/Off button ⏻ located under the vacuum nozzle storage location. Use vacuum as needed.

NOTE:

- When the vacuum is ON, the LED indicator on the On/Off button will illuminate.
- When the vacuum is OFF, the LED indicator will also be off.
- After nine minutes of operation in ACC mode (engine not running), the Low Power Indicator Light (LOW PWR) will illuminate.

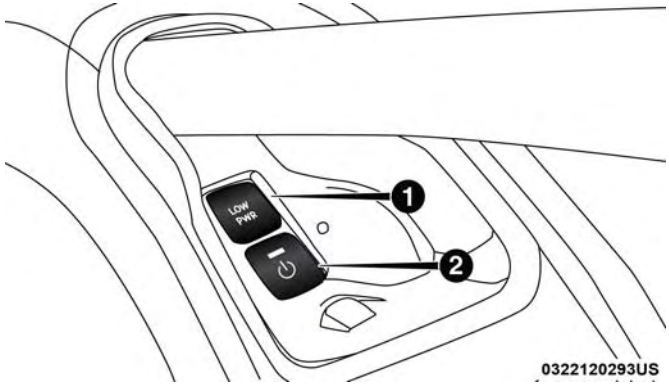

Power Buttons

1 — Low Power Indicator Light
2 — On/Off Button

WARNING!

For in vehicle use ONLY. To reduce the risk of fire, serious injury or death:

- **Do not use vacuum while vehicle is in motion or while driving.**

- **Do not vacuum wet surfaces or any liquids.**
- **Do not use to vacuum up anything outside of the vehicle.**
- **Do not vacuum any flammable liquids, such as gasoline, or use around explosive vapors. Vapors from flammable liquids may form an explosive mixture with air and can be ignited by heat, sparks, or flames. Vapors may travel to a source of ignition and explode.**

- **Do not vacuum anything that is burning or smoking, such as cigarettes, matches, or hot ashes/embers.**

(Continued)

WARNING! ***(Continued)***

- **Do not allow to be used as a toy. Close attention is necessary when used by or near children.**
- **Do not leave the vacuum running while unattended.**
- **Use only as described in this manual. Use only attachments provided with your vehicle.**
- **Do not put any object into openings. Do not use with any opening blocked; keep free of dust, lint, hair, and anything that may reduce air flow.**
- **Do not vacuum toxic material such as chlorine bleach, ammonia, drain cleaner, etc.**
- **Do not vacuum hard or sharp objects such as glass, nails, screws, coins, etc.**
- **Keep hair, loose clothing, fingers, and all parts of body away from openings and moving parts.**
- **Only use with filter in place. Periodically check that the filter is in place and in good condition.**

WARNING!

This equipment incorporates parts such as switches, motors, or the like that tend to produce arcs or sparks that can cause an explosion. When using your vacuum

(Continued)

WARNING! *(Continued)*

near gasoline-dispensing equipment or service stations, park vehicle at least 20 ft (6 m) away from the exterior enclosure of any dispensing pump. The vacuum is mounted more than 18 inches (45 cm) above ground level in your vehicle.

5. When finished, push power button to turn vacuum off and store vacuum hose and any attachments.
6. Before exiting the vehicle:
   - If vehicle is in ACC mode, push ignition button to place ignition in the OFF mode, remove key fob from the vehicle, and lock the vehicle.
   - If the engine is running, raise all of the windows, push ignition button to place ignition in the OFF mode, remove key fob from the vehicle, close all of the doors and the liftgate and lock the vehicle.

Vacuum Troubleshooting

- DO NOT use with any opening blocked. If an object becomes lodged in the hose, attempt to fully extend the hose in a straight line while the vacuum motor is running. If this does not dislodge the object, turn the vacuum OFF and remove the hose from the vehicle following the removal instructions below. If the filter is clogged, follow the emptying debris bin procedure and lightly tap the filter on the collection bin to remove any collected debris from the filter. Both the bin and the filter can be rinsed with water if needed. To avoid mold and stale odors, allow both to dry completely before reinstalling in your vehicle. If filter has tears, holes or other damage and needs to be replaced, please contact your authorized dealer.
- If there are any other issues with your vacuum, contact your authorized dealer. Your vacuum has no user serviceable parts.

Debris Bin

The debris bin is located behind the lower access panel behind the third row seat on the driver's side.

To Empty

1. Push power button to turn vacuum OFF.
2. Open the lower access panel by pulling the finger grip towards you and then pull downward.

3. Twist the release knob counterclockwise and pull the bin towards you.

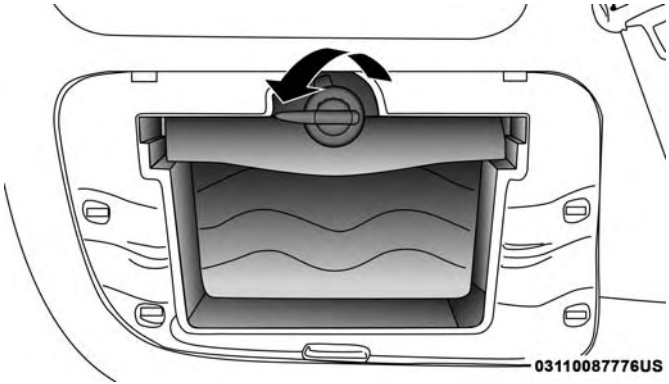

Debris Bin Release Knob

4. Remove the filter and dump the debris in a trash can. Lightly tap the filter on the collection bin to remove loose debris from the filter. If the filter is clogged from extended use, have the filter replaced by your authorized dealer.

5. Reverse the procedure to reinstall.

NOTE: The debris bin must be fully installed and locked for the vacuum to function properly.

Hose Access Port

The hose access port is located behind the upper access panel behind the third row seat on the driver's side.

To Remove Vacuum Hose For Cleaning

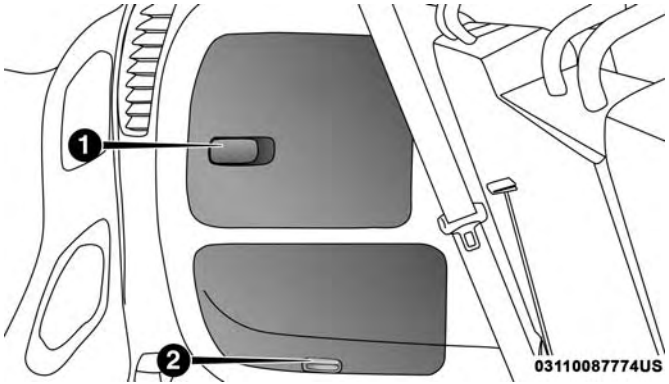

Vacuum System Access Panels

1 — Upper Access Panel
2 — Lower Access Panel

1. Unclip the hose from the hose access port located in the rear of the vehicle by pushing the yellow vacuum hose release lever with right thumb and lifting the hose with index finger.

2. Return to vacuum nozzle storage location located behind the sliding door.
3. Grab the vacuum nozzle and gently pull the hose out through vacuum nozzle storage location.
4. Shake the hose to remove any objects stuck in the hose. Take care not to perforate the hose while attempting to dislodge any objects.
5. Reverse the procedure to reinstall and clip the hose into place.

GARAGE DOOR OPENER — IF EQUIPPED

HomeLink replaces up to three hand-held transmitters that operate devices such as garage door openers, motorized gates, lighting or home security systems. The HomeLink unit is powered by your vehicle's 12 Volt battery.

The HomeLink buttons, located on the driver's sunvisor, designate the three different HomeLink channels. The HomeLink indicator is located above the center button.

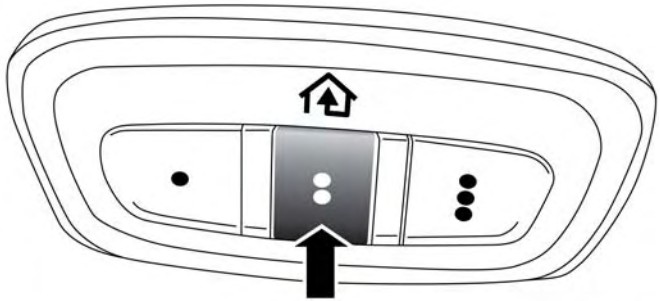

HomeLink Buttons/Overhead Console

NOTE: HomeLink is disabled when the Vehicle Security Alarm is active.

Before You Begin Programming HomeLink

Be sure that your vehicle is parked outside of the garage before you begin programming.

For more efficient programming and accurate transmission of the radio-frequency signal it is recommended that a new battery be placed in the hand-held transmitter of the device that is being programmed to the HomeLink system.

To erase the channels, place the ignition in the ON/RUN position, and push and hold the two outside HomeLink buttons (I and III) for up to 20 seconds or until the orange indicator flashes.

NOTE:

- Erasing all channels should only be performed when programming HomeLink for the first time. Do not erase channels when programming additional buttons.
- If you have any problems, or require assistance, please call toll-free 1-800-355-3515 or, on the Internet at HomeLink.com for information or assistance.

Programming A Rolling Code

For programming garage door openers that were manufactured after 1995. These garage door openers can be identified by the "LEARN" or "TRAIN" button located where the hanging antenna is attached to the garage door opener.

NOTE: It is NOT the button that is normally used to open and close the door. The name and color of the button may vary by manufacturer.

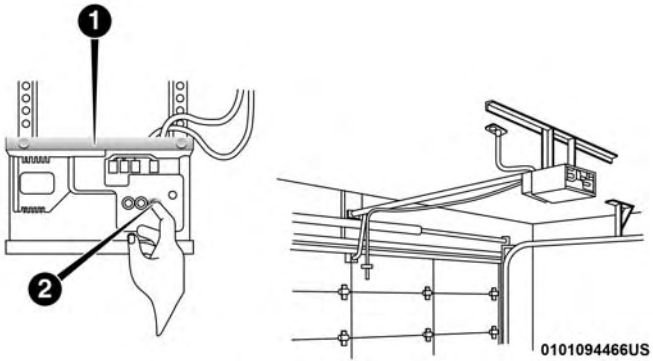

Training The Garage Door Opener

1 — Door Opener
2 — Training Button

1. Place the ignition in the ON/RUN position.
2. Place the hand-held transmitter 1 to 3 inches (3 to 8 cm) away from the HomeLink button you wish to program while keeping the HomeLink indicator light in view.
3. Push and hold the HomeLink button you want to program while you push and hold the hand-held transmitter button.

4. Continue to hold both buttons and observe the indicator light. The HomeLink indicator will flash slowly and then rapidly after HomeLink has received the frequency signal from the hand-held transmitter. Release both buttons after the indicator light changes from slow to rapid.

5. At the garage door opener motor (in the garage), locate the "LEARN" or "TRAINING" button. This can usually be found where the hanging antenna wire is attached to the garage door opener/device motor. Firmly push and release the "LEARN" or "TRAINING" button. On some garage door openers/devices there may be a light that blinks when the garage door opener/device is in the LEARN/TRAIN mode.

NOTE: You have 30 seconds in which to initiate the next step after the LEARN button has been pushed.

6. Return to the vehicle and push the programmed HomeLink button twice (holding the button for two seconds each time). If the garage door opener/device activates, programming is complete.

NOTE: If the garage door opener/device does not activate, push the button a third time (for two seconds) to complete the training.

To program the remaining two HomeLink buttons, repeat each step for each remaining button. DO NOT erase the channels.

Reprogramming A Single HomeLink Button (Rolling Code)

To reprogram a channel that has been previously trained, follow these steps:

1. Cycle the ignition to the ON/RUN position.

2. Push and hold the desired HomeLink button until the indicator light begins to flash after 20 seconds. Do not release the button.

3. Without releasing the button proceed with "Programming A Rolling Code" step 2 and follow all remaining steps."

Programming A Non-Rolling Code

For programming Garage Door Openers manufactured before 1995.

1. Cycle the ignition to the ON/RUN position.

2. Place the hand-held transmitter 1 to 3 inches (3 to 8 cm) away from the HomeLink button you wish to program while keeping the HomeLink indicator light in view.

3. Press and hold the HomeLink button you want to program while you press and hold the hand-held transmitter button.

4. Continue to hold both buttons and observe the indicator light. The HomeLink indicator will flash slowly and then rapidly after HomeLink has received the frequency signal from the hand-held transmitter. Release both buttons after the indicator light changes from slow to rapid.

5. Press and hold the programmed HomeLink button and observe the indicator light.
   - If the indicator light stays on constantly, programming is complete and the garage door/device should activate when the HomeLink button is pressed.
   - To program the two remaining HomeLink buttons, repeat each step for each remaining button. DO NOT erase the channels.

Reprogramming A Single HomeLink Button (Non-Rolling Code)

To reprogram a channel that has been previously trained, follow these steps:

1. Cycle the ignition to the ON/RUN position.

2. Press and hold the desired HomeLink button until the indicator light begins to flash after 20 seconds. Do not release the button.

3. Without releasing the button, proceed with "Programming A Non-Rolling Code" step 2 and follow all remaining steps.

Canadian/Gate Operator Programming

For programming transmitters in Canada/United States that require the transmitter signals to "time-out" after several seconds of transmission.

Canadian radio frequency laws require transmitter signals to time-out (or quit) after several seconds of transmission – which may not be long enough for HomeLink to pick up the signal during programming. Similar to this Canadian law, some U.S. gate operators are designed to time-out in the same manner.

It may be helpful to unplug the device during the cycling process to prevent possible overheating of the garage door or gate motor.

1. Cycle the ignition to the ON/RUN position.

2. Place the hand-held transmitter 1 to 3 inches (3 to 8 cm) away from the HomeLink button you wish to program while keeping the HomeLink indicator light in view.
3. Continue to press and hold the HomeLink button, while you press and release ("cycle") your hand-held transmitter every two seconds until HomeLink has successfully accepted the frequency signal. The indicator light will flash slowly and then rapidly when fully trained.
4. Watch for the HomeLink indicator to change flash rates. When it changes, it is programmed. It may take up to 30 seconds or longer in rare cases. The garage door may open and close while you are programming.
5. Press and hold the programmed HomeLink button and observe the indicator light.

NOTE:

- If the indicator light stays on constantly, programming is complete and the garage door/device should activate when the HomeLink button is pressed.
- To program the two remaining HomeLink buttons, repeat each step for each remaining button. DO NOT erase the channels.

If you unplugged the garage door opener/device for programming, plug it back in at this time.

Reprogramming A Single HomeLink Button (Canadian/ Gate Operator)

To reprogram a channel that has been previously trained, follow these steps:

1. Cycle the ignition to the ON/RUN position.
2. Press and hold the desired HomeLink button until the indicator light begins to flash after 20 seconds. Do not release the button.
3. Without releasing the button, proceed with "Canadian/ Gate Operator Programming" step 2 and follow all remaining steps.

Using HomeLink

To operate, push and release the programmed HomeLink button. Activation will now occur for the programmed device (i.e. garage door opener, gate operator, security system, entry door lock, home/office lighting, etc.). The hand-held transmitter of the device may also be used at any time.

Security

It is advised to erase all channels before you sell or turn in your vehicle.

To do this, push and hold the two outside buttons for 20 seconds until the orange indicator flashes. Note that all channels will be erased. Individual channels cannot be erased.

The HomeLink Universal Transceiver is disabled when the Vehicle Security Alarm is active.

Troubleshooting Tips

If you are having trouble programming HomeLink, here are some of the most common solutions:

- Replace the battery in the Garage Door Opener hand-held transmitter.
- Push the LEARN button on the Garage Door Opener to complete the training for a Rolling Code.
- Did you unplug the device for programming and remember to plug it back in?

If you have any problems, or require assistance, please call toll-free 1-800-355-3515 or, on the Internet at HomeLink.com for information or assistance.

WARNING!

- **Vehicle exhaust contains carbon monoxide, a dangerous gas. Do not run your vehicle in the garage while programming the transceiver. Exhaust gas can cause serious injury or death.**
- **Your motorized door or gate will open and close while you are programming the universal transceiver. Do not program the transceiver if people, pets or other objects are in the path of the door or gate. Only use this transceiver with a garage door opener that has a "stop and reverse" feature as required by Federal safety standards. This includes most garage door opener models manufactured after 1982. Do not use a garage door opener without these safety features. Call toll-free 1-800-355-3515 or, on the Internet at HomeLink.com for safety information or assistance.**

General Information

The following regulatory statement applies to all Radio Frequency (RF) devices equipped in this vehicle:

This device complies with Part 15 of the FCC Rules and with Innovation, Science and Economic Development Canada license-exempt RSS standard(s). Operation is subject to the following two conditions:

1. This device may not cause harmful interference, and
2. This device must accept any interference received, including interference that may cause undesired operation.

NOTE: Changes or modifications not expressly approved by the party responsible for compliance could void the user's authority to operate the equipment.

INTERNAL EQUIPMENT

Storage

Glove Compartment

The glove compartment is located on the passenger side of the instrument panel.

To open the glove compartment, pull the release handle.

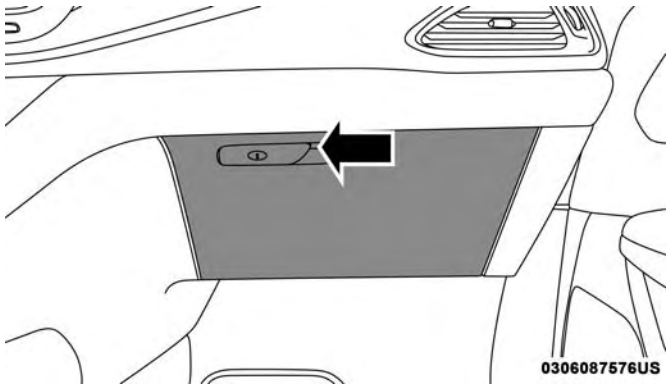

Release Handle

Front Door Storage

Both interior front door panels have multiple pockets for storage.

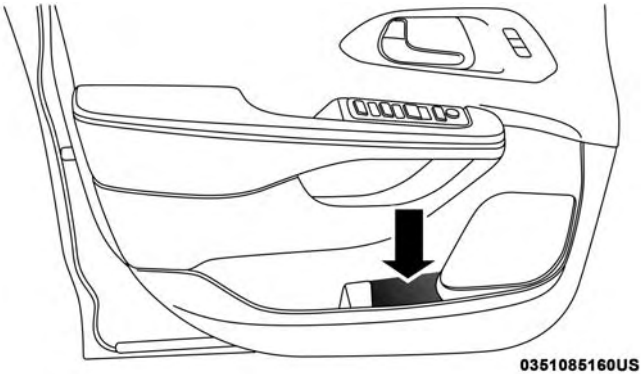

Front Door Storage

WARNING!

If containers of hot liquid are placed in the bottle holder, they can spill when the door is closed, burning the occupants. Be careful when closing the doors to avoid injury.

Instrument Panel Drawer

There is a storage drawer located in the lower center of the instrument panel. It can be released by pushing the access button above it. The drawer is actuator assisted once the access button is pushed. Pull drawer outward to the fully open position.

Drawer Access Button

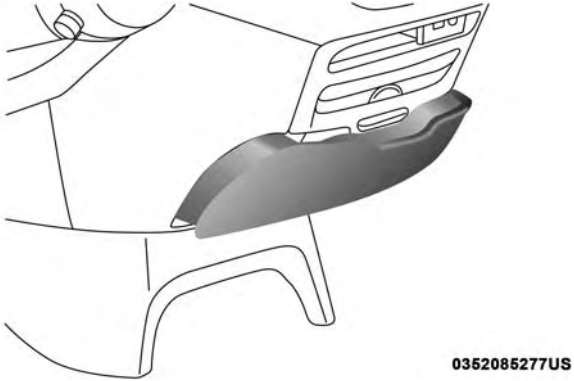

Drawer Released

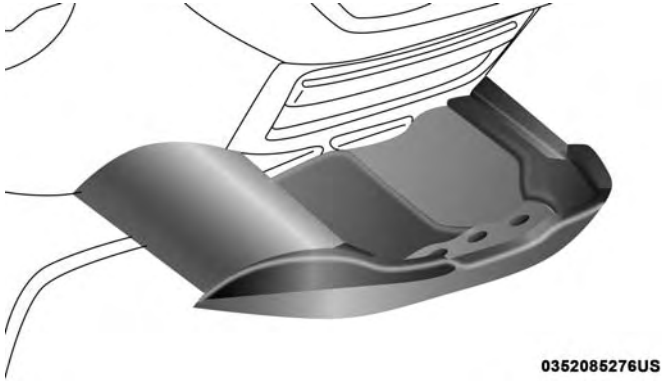

Drawer Fully Open

CAUTION!

The storage drawer must be closed while driving. If left open during a collision, additional damage may occur to property or the drawer mechanism.

Front Seatback Storage — If Equipped

The front seatbacks have a storage pocket on some models.

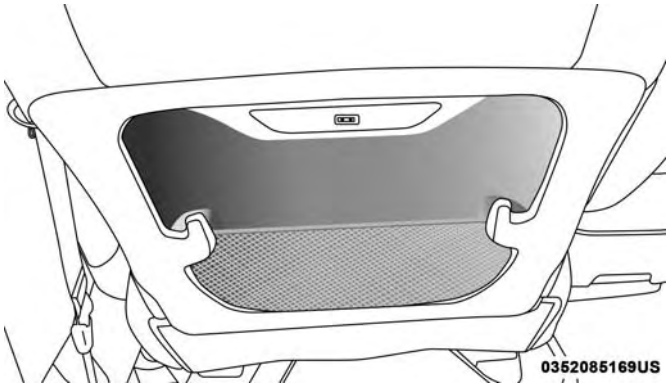

Front Seatback Storage

Umbrella Holder

An umbrella holder has been conveniently molded into the front door entry scuff moldings.

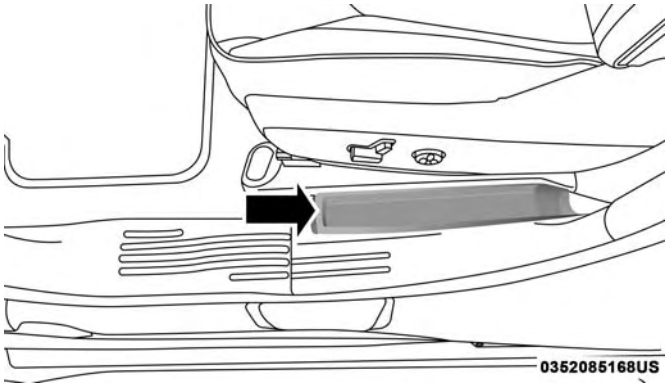

Umbrella Holder

Second Row Floor Storage Bins

The area below the load floor, located in front of the second row seats, is available for storage.

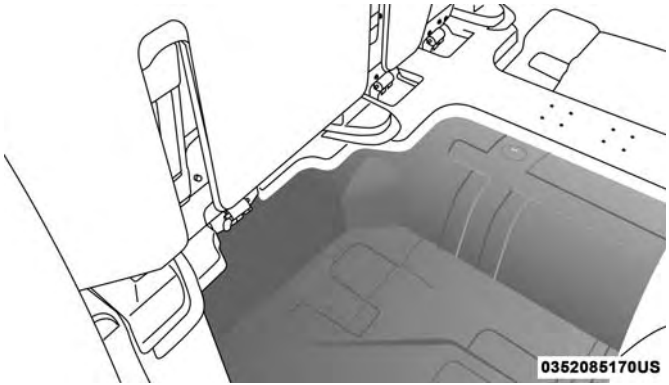

In Floor Storage Location

1. To access the storage bin with front seats in the rearward position, place the lock rod in the unlocked position so the load floor can fold upwards towards the seatback.

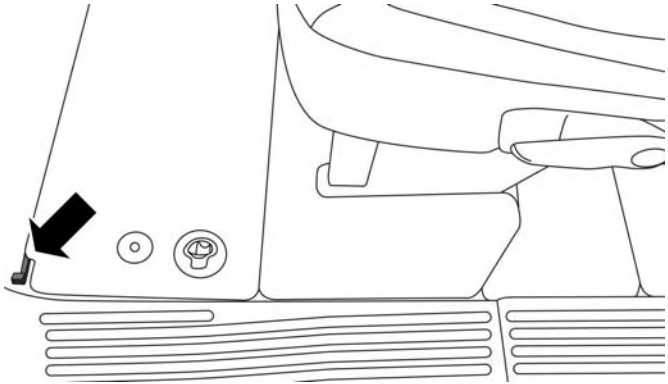

Lock Rod

NOTE:

- Push the lock rod inward for the locked position.
- Pull outward on the lock rod for the unlocked position.

2. Pull the latch located near the second row seat to open the floor panel.

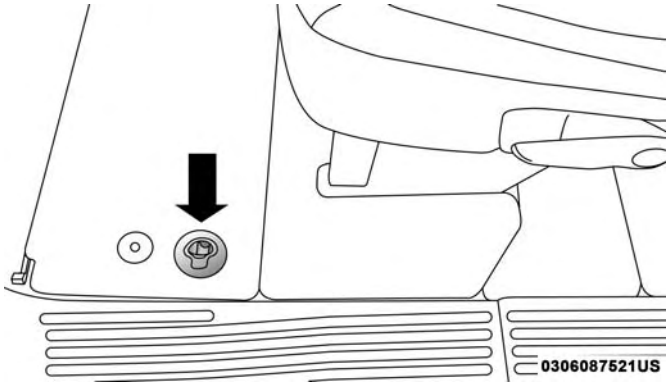

Floor Latch

WARNING!

In a collision, serious injury could result if the seat storage bin covers are not properly latched.
- **Do not drive the vehicle with the storage bin covers open.**
- **Keep the storage bin covers closed and latched while the vehicle is in motion.**

(Continued)

WARNING! ***(Continued)***

- **Do not operate the storage bin covers while the vehicle is in motion.**
- **Do not use a storage bin latch as a tie down.**

CAUTION!

The storage bin cover must lay flat and be locked to avoid damage from contact with the front seat tracks, which have minimal clearance to the cover. If the storage bin cover is left in the open position, front seat adjustment may damage the cover.

Storage Bin Safety Warning

Carefully follow these warnings to help prevent personal injury or damage to your vehicle:

WARNING!

- **Always close the storage bin covers when your vehicle is unattended.**
- **Do not allow children to have access to the second row seat storage bins. Once in the storage bin, young**

(Continued)

WARNING! *(Continued)*

children may not be able to escape. If trapped in the storage bin, children can die from suffocation or heat stroke.

- **In a collision, serious injury could result if the seat storage bin covers are not properly latched.**
- **Do not drive the vehicle with the storage bin covers open. Keep the storage bin covers closed and latched while the vehicle is in motion.**
- **Do not operate the storage bin covers while the vehicle is in motion.**
- **Do not use a storage bin latch as a tie down.**

CAUTION!

The storage bin cover must lay flat and be locked to avoid damage from contact with the front seat tracks, which have minimal clearance to the cover. If the storage bin cover is left in the open position, front seat adjustment may damage the cover.

Seat Storage Bin Cover Emergency Release Lever

As a security measure, the Seat Storage Bin Cover has an Emergency Release Lever built into the latching mechanism.

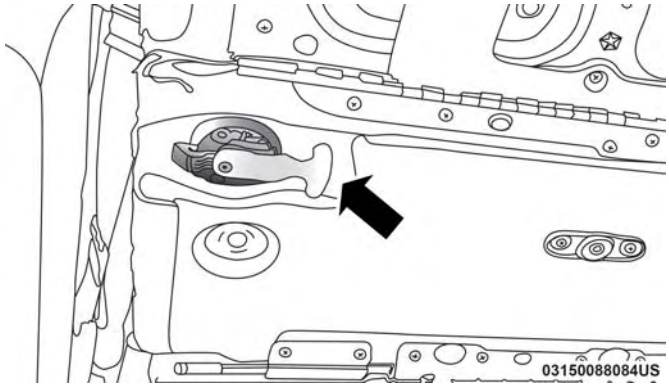

Storage Bin Cover Emergency Release Lever

NOTE: In the event of an individual being locked inside the storage bin, the storage bin cover can be opened from inside of the bin by pushing on the glow-in-the-dark lever attached to the storage bin cover latching mechanism.

Coat Hooks — If Equipped

Coat hooks are located along the headliner for the second and third row seating positions. The coat hook load limit is 10 lbs (4.5 kg). Exceeding the recommended load limit can cause the coat hooks to break or disengage from the vehicle.

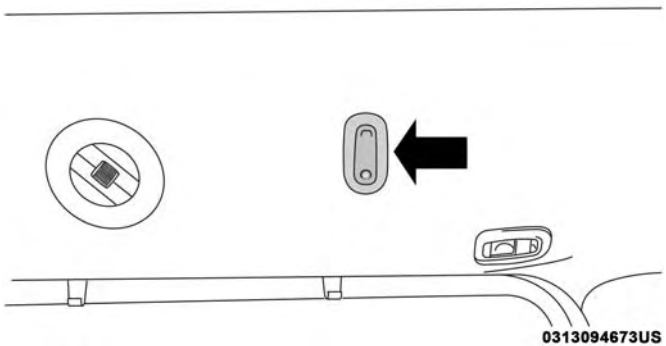

Coat Hook

Sun Screens — If Equipped

Sun screens are available for second and third row seating windows. The screens store in the sill trim panels, and the tops of the windows are equipped with hooks that the sun screens attach to when pulled out.

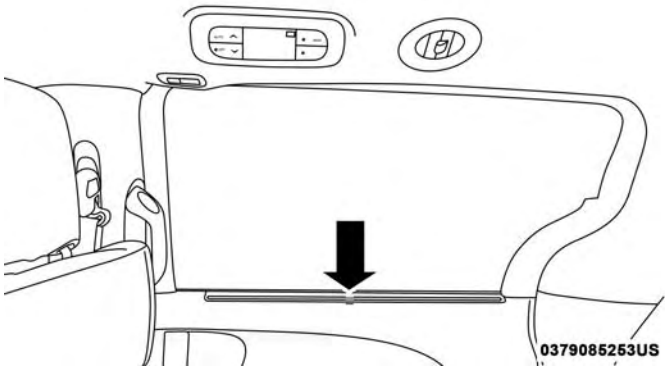

Sun Screen Retracted

Gently pull up on the tab to raise the sun screen. Continue pulling the sun screen until the tab is near the top of the window.

Once the screen is completely to the top of the window, extend the top bar of the sun screen over the two hooks attached to the top of the window.

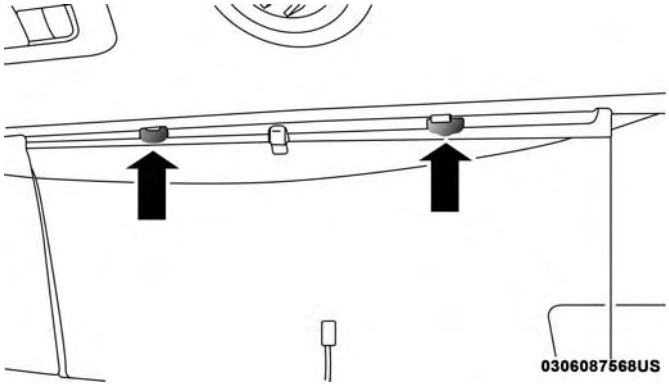

Sun Screen Extended

To lower the sun screen, gently lift the tab upward to disengage the hooks, and feed the screen back into the base sill.

Power Outlets

Your vehicle is equipped with 12 Volt (15 Amp) power outlets, and 5 Volt (2.5 Amp) USB power outlets, that can be used to power cellular phones, small electronics and other low powered electrical accessories. The power outlets can be labeled with either a “key” or a “battery” symbol to indicate how the outlet is powered. Power outlets labeled with a “key” are powered when the ignition is in the ON or ACC position, while the outlets labeled with a “battery” are connected directly to the battery and powered at all times.

NOTE:

- All accessories connected to the “battery” powered outlets should be removed or turned off when the vehicle is not in use to protect the battery against discharge.

CAUTION!

Power outlets are designed for accessory plugs only. Do not insert any other object in the power outlets as this will damage the outlet and blow the fuse. Improper use of the power outlet can cause damage not covered by your New Vehicle Limited Warranty.

The front power outlet is located at the bottom of the instrument panel.

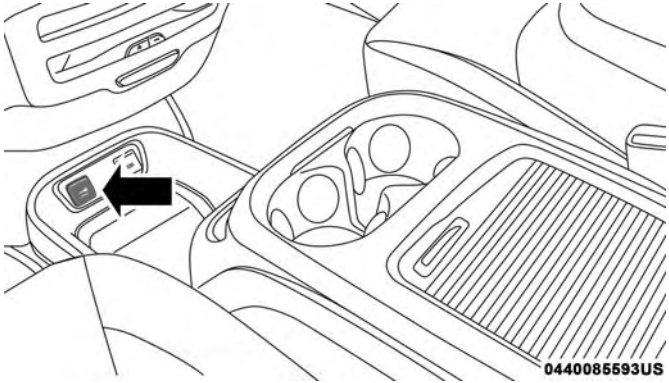

12 Volt Front Power Outlet

In addition to the front power outlets, there is also a power outlet located in the rear cargo area.

The rear power outlet is located in the right rear cargo area.

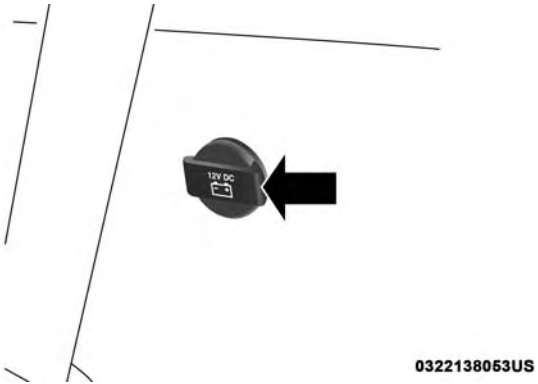

Rear Power Outlet

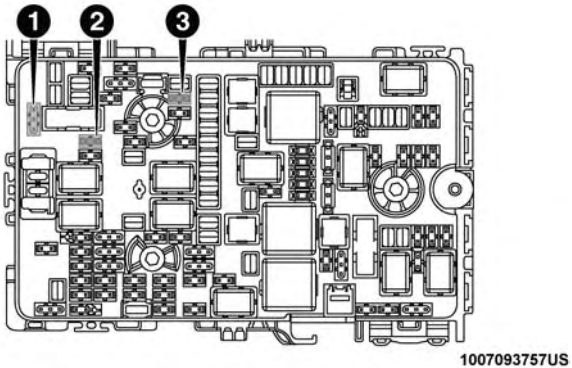

Power Outlet Fuse Locations

1 — F95A-F95B USB IP 10A
2 — F85 Cigar Lighter 20A
3 — F60 RR Cargo Power Outlet 20A

WARNING!

To avoid serious injury or death:

- **Only devices designed for use in this type of outlet should be inserted into any 12 Volt outlet.**
- **Do not touch with wet hands.**

(Continued)

WARNING! ***(Continued)***

- **Close the lid when not in use and while driving the vehicle.**
- **If this outlet is mishandled, it may cause an electric shock and failure.**

CAUTION!

- **Many accessories that can be plugged in draw power from the vehicle's battery, even when not in use (i.e., cellular phones, etc.). Eventually, if plugged in long enough, the vehicle's battery will discharge sufficiently to degrade battery life and/or prevent the engine from starting.**
- **Accessories that draw higher power (i.e., coolers, vacuum cleaners, lights, etc.) will degrade the battery even more quickly. Only use these intermittently and with greater caution.**
- **After the use of high power draw accessories, or long periods of the vehicle not being started (with accessories still plugged in), the vehicle must be driven a sufficient length of time to allow the generator to recharge the vehicle's battery.**

Power Inverter — If Equipped

There is a 115 Volt, 150 Watt Power Inverter outlet located on the right side of the vehicle, before the third row of seats to convert DC current to AC current. The Power Inverter can power cellular phones, electronics and other low power devices requiring up to 150 Watts. Certain high-end video game consoles will exceed this power limit, as will most power tools.

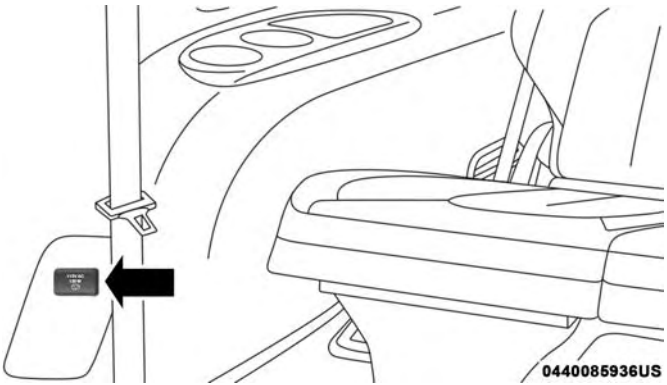

Power Inverter

The Power Inverter turns on when the device is plugged in, and the ignition is in RUN mode. It turns off when the device is unplugged or the ignition is no longer in RUN mode.

The Power Inverter is designed with built-in overload protection. If the power rating of 150 Watts is exceeded, the Power Inverter shuts down. Once the electrical device has been removed from the Power Inverter, it resets. To avoid overloading the circuit, check the power ratings on electrical devices prior to using the Power Inverter.

WARNING!

To avoid serious injury or death:
- **Do not insert any objects into the receptacles.**
- **Do not touch with wet hands.**
- **Close the lid when not in use.**
- **If this outlet is mishandled, it may cause an electric shock and failure.**

Wireless Charging Pad — If Equipped

Your vehicle may be equipped with an Open Dots compatible wire-free phone charging surface located below the instrument panel near the front power outlet. The wireless charger features continuous wireless charging during vehicle operation and allows for uninterrupted Bluetooth streaming to properly equipped vehicle audio systems.

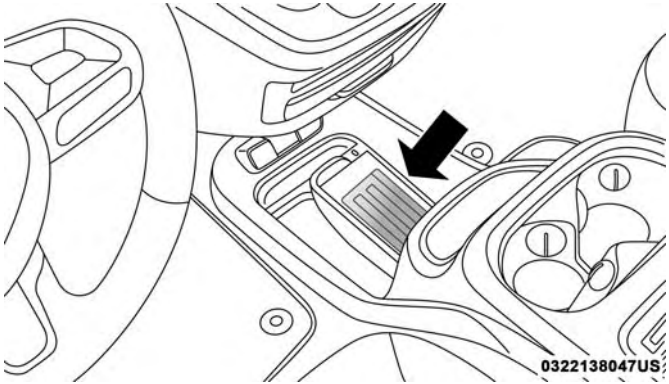

Wireless Charging Pad

In order to enjoy the convenience of Open Dots wire-free charging, you must obtain an aftermarket wireless-enabled case and then install the case on your phone. Set the phone on the wireless charging pad face up. The charging indicator on your phone will light up indicating that your phone is charging.

NOTE: The charging pad is safe to the touch. However, if metallic items are placed on the charging surface while in use, the device will turn off. Clean all spills immediately and allow to dry before using.

For phones that already have built-in wireless charging capability (Samsung, Apple iPhone 8, 8 Plus and X Phones), a Qi Adapter is available to charge your phone using the Open Dot wire-free phone charging surface. Simply place the Qi Adapter (dot side down) on the charging surface and then place your built-in charging capable phone face up on top of the Qi Adapter. This product may not be compatible with all vehicle/Open Dots compatible wire-free phone charging surface combinations.

CAUTION!

The key fob should not be placed on the charging pad or within 15 cm (150 mm) of it. Doing so can cause excessive heat buildup and damage to the fob. Placing the fob in close proximity of the charging pad blocks the fob from being detected by the vehicle and prevents the vehicle from starting.

To get your free aftermarket phone case or Qi Adapter, go to http://invehiclewirelesscharging.com. You will need your vehicle/voucher identification number (located in your vehicle's glove box). If you have any questions or are not sure if you need a phone case or the Qi Adapter, please call our customer support line for assistance: 877–360–7702

Cigar Lighter — If Equipped

NOTE: Cigar lighters can be purchased at an authorized dealer through Mopar parts.

The cigar lighter is located at the bottom of the instrument panel. Push lighter inward to heat.

After a few seconds, the lighter automatically returns to its initial position and is ready to be used.

WARNING!

When the cigar lighter is in use it becomes very hot. To avoid serious injury, handle the cigar lighter with care. Always check that the cigar lighter has turned off.

CAUTION!

Do not connect devices with power higher than 180 Watts (15 Amps) to the socket. Do not damage the socket by using unsuitable adaptors. If the 180 Watt (15 Amp) power rating is exceeded the fuse protecting the system will need to be replaced.

Smoker's Package Kit — If Equipped

With the optional authorized dealer-installed Smoker's Package Kit, a removable ash receiver is inserted into one of the two cupholders in the center floor console. To install the ash receiver, align the receiver so the thumb grip on the lid is facing rearward. Push the ash receiver into either of the cup wells to secure. Pull upward on the ash receiver to remove for cleaning and/or storage.

The left rear trim panel cupholder is designed to accommodate a second ash receiver, if desired.

Overhead Sunglass Storage

At the front of the overhead console, a compartment is provided for the storage of one pair of sunglasses.

From the closed position, push the intention to open the compartment.

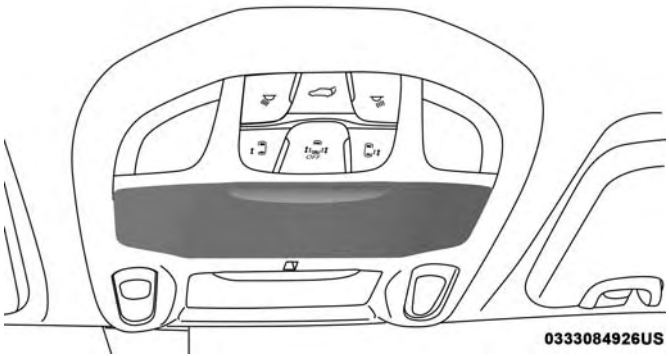

Overhead Sunglass Door Latch

The door will slowly rotate to the full open position.

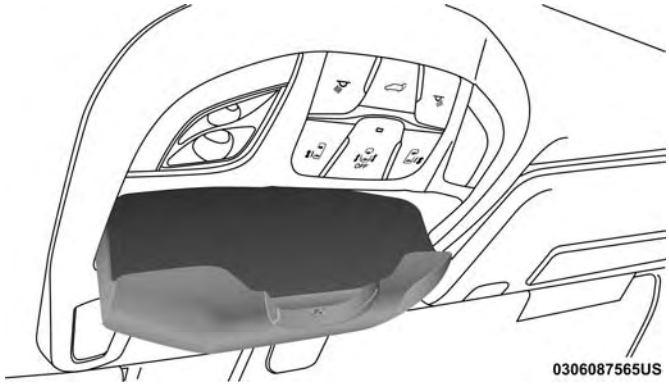

Full Open Position

ROOF LUGGAGE RACK — IF EQUIPPED

The crossbars and side rails are designed to carry weight on vehicles equipped with a luggage rack. **The load must not exceed 150 lbs (68 kg), and should be uniformly distributed over the luggage rack crossbars.**

The crossbars on your vehicle are delivered stowed within the roof rack side rails. Crossbars should always be used whenever cargo is placed on the roof rack. Check the

straps frequently to be sure that the load remains securely attached.

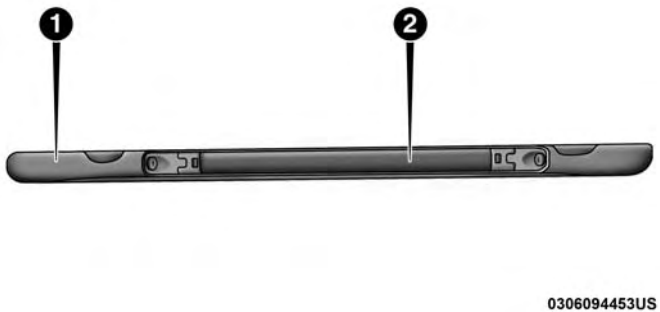

Roof Rack

1 — Side Rail
2 — Crossbar

The roof rack does not increase the total load carrying capacity of the vehicle. Be sure the total load of cargo inside the vehicle plus that on the external rack does not exceed the maximum vehicle load capacity.

Deploying The Crossbars

1. To deploy the crossbars, completely loosen the thumb screws at both ends of the crossbar and lift the crossbar from its stowed position in the side rail. Repeat with crossbar on the opposite side.

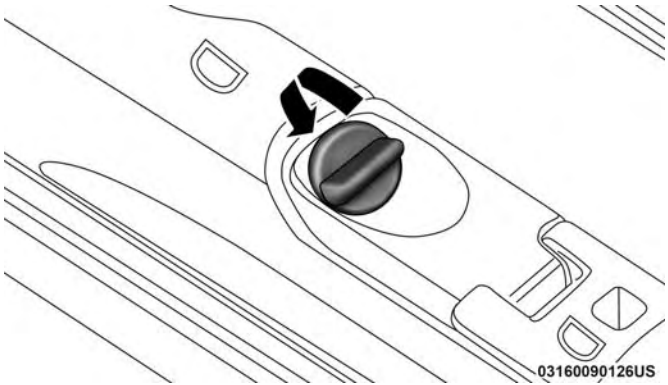

Thumb Screw

NOTE: The thumb screws cannot be fully removed.

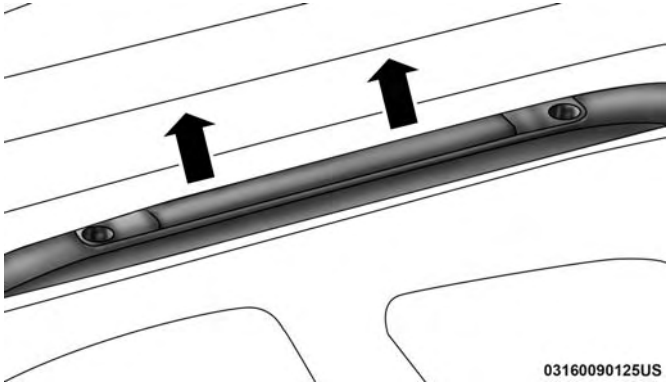

Removing Crossbars

CAUTION!

Use care when removing and handling the crossbars to prevent damage to the vehicle.

2. Bend the crossbar supports at each end, taking care to keep hand clear of pivoting joint. Slide the thumb screw down.

Bending Pivot

3. Position the crossbars across the roof making sure the letters on the crossbars align with the matching letters on the side rail.

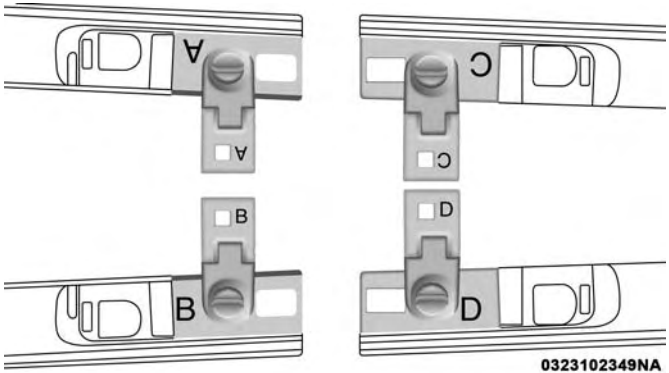

Positioning Crossbars

4. Once the crossbar is in place, tighten both thumb screws completely.

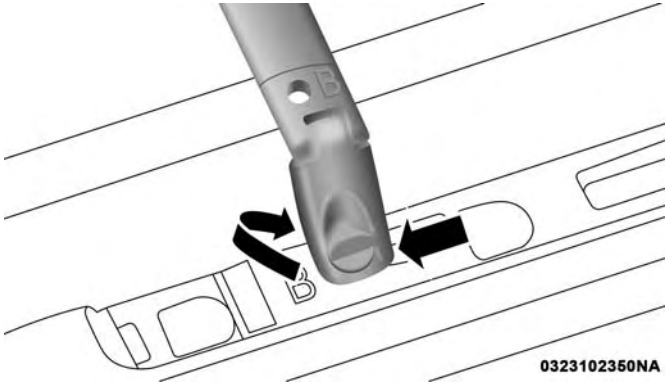

Installing Crossbars

5. Deploy and tighten the second crossbar to complete the deployment of the crossbars.

NOTE: The crossbars are not identical and have fixed deployment positions. Rear crossbar can be deployed in two different positions.

Stowing The Crossbars

1. Starting with one crossbar, completely loosen the thumb screws at both ends. Lift the crossbar away from the matching letter to remove it from the deployed position. Repeat with the other crossbar.

CAUTION!

Use care when removing and handling the crossbars to prevent damage to the vehicle.

2. Starting with the one crossbar, bend up the pivot supports at each end.

0323102347NA

Crossbar Pivot

3. Then, position the crossbar along the correct side rail. Make sure the letters on the crossbar align with the matching letters on the side rail.

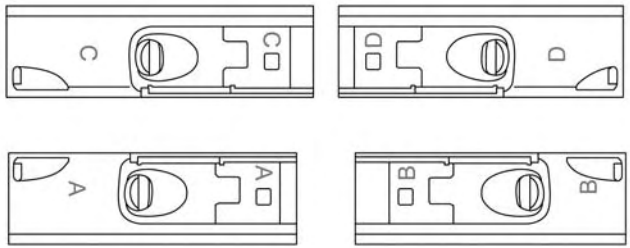

0323102346NA

Stowing Crossbars

4. The crossbar will nest fully within the side rail.

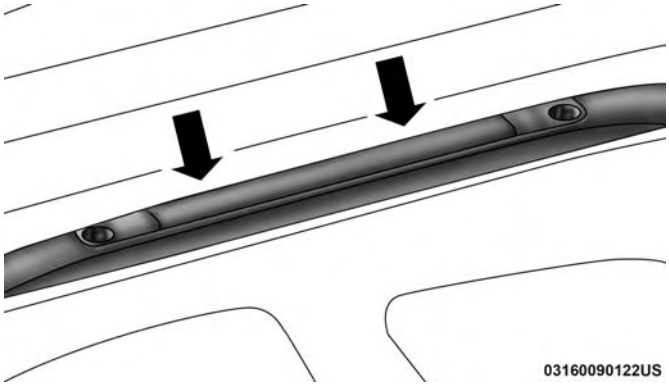

Crossbar To Side Rail

5. Once the driver's side crossbar is in place, tighten the thumb screws completely.

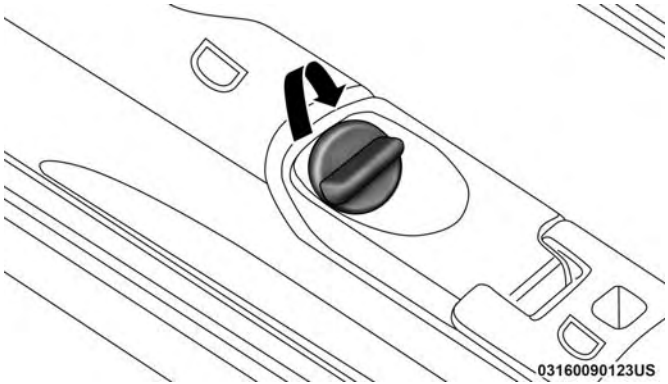

Tightening Crossbar

6. Repeat the procedure to stow the second crossbar on the opposite side.

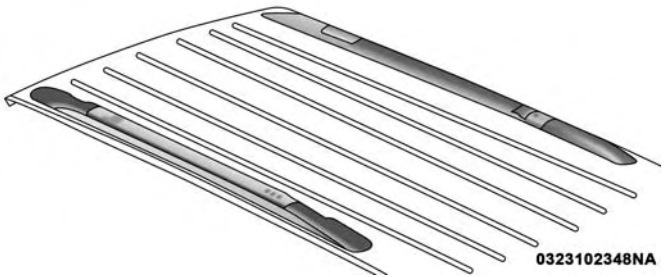

Stowed Crossbars

NOTE:

- To help control wind noise, stow the crossbars in the side rails when they are not in use.
- If any metallic object is placed over the satellite radio antenna (if equipped), you may experience interruption of satellite radio reception.

WARNING!

Cargo must be securely tied down before driving your vehicle. Improperly secured loads can fly off the vehicle, particularly at high speeds, resulting in personal injury or property damage. Follow the roof rack cautions when carrying cargo on your roof rack.

CAUTION!

- **To prevent damage to the roof of your vehicle, DO NOT carry any loads on the roof rack without the crossbars deployed. The load should be secured and placed on top of the crossbars, not directly on the roof. If it is necessary to place the load on the roof, place a blanket or other protective layer between the load and the roof surface.**
- **To avoid damage to the roof rack and vehicle, do not exceed the maximum roof rack load capacity of 150 lb (68 kg). Always distribute heavy loads as evenly as possible and secure the load appropriately.**
- **Load should always be secured to cross bars first, with tie down loops used as additional securing**

(Continued)

CAUTION! *(Continued)*

points if needed. Tie loops are intended as supplementary tie down points only. Do not use ratcheting mechanisms with the tie loops. Check the straps and thumb wheels frequently to be sure that the load remains securely attached.

- **Long loads that extend over the windshield, such as wood panels or surfboards, or loads with large frontal area should be secured to both the front and rear of the vehicle.**
- **Travel at reduced speeds and turn corners carefully when carrying large or heavy loads on the roof rack. Wind forces, due to natural causes or nearby truck traffic, can add sudden upward lift to a load. This is especially true on large flat loads and may result in damage to the cargo or your vehicle.**

GETTING TO KNOW YOUR INSTRUMENT PANEL

CONTENTS

■ INSTRUMENT CLUSTER 190

□ Instrument Cluster Descriptions 191

■ INSTRUMENT CLUSTER DISPLAY 192

□ Instrument Cluster Display Location And Controls 193

□ Oil Life Reset 194

□ KeySense Cluster Messages — If Equipped. 196

□ Instrument Cluster Display Menu Items 197

□ Battery Saver On/Battery Saver Mode Message — Electrical Load Reduction Actions — If Equipped 202

■ TRIP COMPUTER 204

■ WARNING LIGHTS AND MESSAGES 204

□ Red Warning Lights 205

□ Yellow Warning Lights 209

□ Yellow Indicator Lights. 214

□ Green Indicator Lights 214

□ Blue Indicator Lights 215

□ White Indicator Lights 215

■ ONBOARD DIAGNOSTIC SYSTEM — OBD II . . .216

□ Onboard Diagnostic System (OBD II) Cybersecurity 216

■ EMISSIONS INSPECTION AND MAINTENANCE PROGRAMS 217

INSTRUMENT CLUSTER

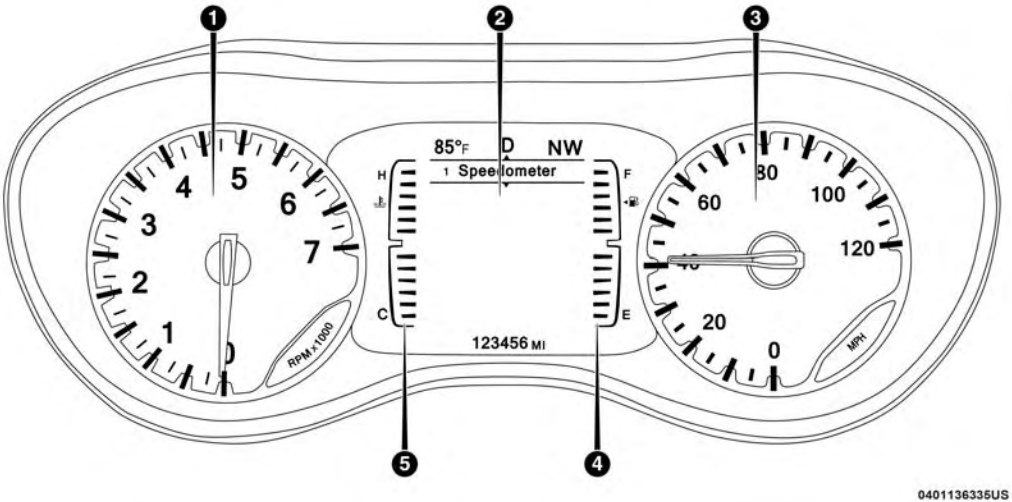

Base Instrument Cluster

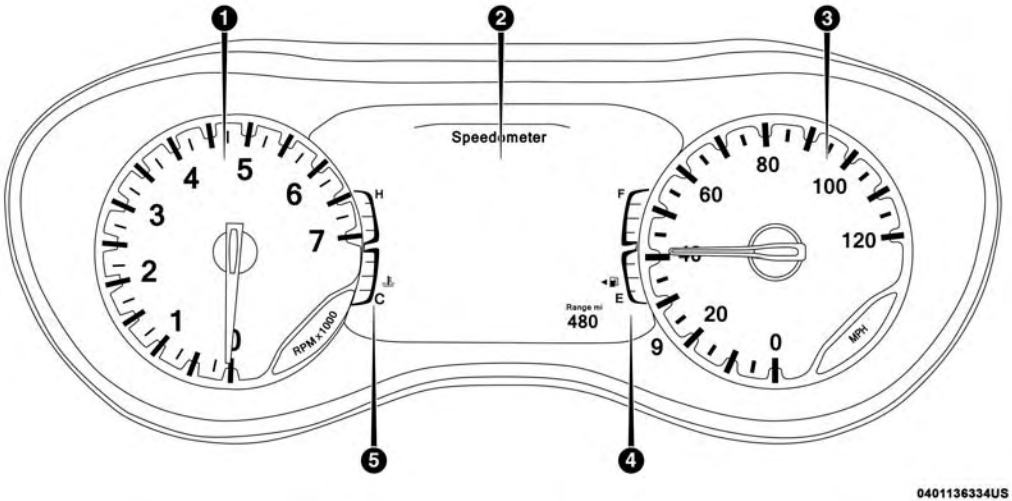

Premium Instrument Cluster

Instrument Cluster Descriptions

1. Tachometer
   - Indicates the engine speed in revolutions per minute (RPM x 1000).
2. Instrument Cluster Display
   - When the appropriate conditions exist, this display shows the instrument cluster display messages. Refer to "Instrument Cluster Display" located in "Getting To Know Your Instrument Panel" for further information.

3. Speedometer
   - Indicates vehicle speed.
4. Fuel Gauge
   - The gauge shows the level of fuel in the fuel tank when the ignition switch is in the ON/RUN position.
   - The fuel pump symbol points to the side of the vehicle where the fuel door is located.
5. Temperature Gauge
   - The temperature gauge shows engine coolant temperature. Any reading within the normal range indicates that the engine cooling system is operating satisfactorily.
   - The gauge can indicate a higher temperature when driving in hot weather or up mountain grades. It should not be allowed to exceed the upper limits of the normal operating range.

WARNING!

Driving with a hot engine cooling system could damage your vehicle. If the temperature gauge reaches "H" pull over and stop the vehicle. Idle the vehicle with the air conditioner turned off until the gauge drops back

(Continued)

WARNING! *(Continued)*

into the normal range and is no longer red. If the gauge remains on the "H", turn the engine off immediately and call an authorized dealer for service.

WARNING!

A hot engine cooling system is dangerous. You or others could be badly burned by steam or boiling coolant. You may want to call an authorized dealer for service if your vehicle overheats. If you decide to look under the hood yourself, see "Servicing And Maintenance".

NOTE: The hard telltales will illuminate for a bulb check when the ignition is first cycled.

INSTRUMENT CLUSTER DISPLAY

Your vehicle is equipped with an instrument cluster display, which offers useful information to the driver. With the ignition in the STOP/OFF position (and the key removed, for vehicles with mechanical key), opening/closing of a door will activate the display for viewing, and display the total miles or kilometers in the odometer. Your instrument

cluster display is designed to display important information about your vehicle's systems and features. Using a driver interactive display located on the instrument panel, your instrument cluster display can show you how systems are working and give you warnings when they are not. The steering wheel mounted controls allow you to scroll through and enter the main menus and sub-menus. You can access the specific information you want and make selections and adjustments.

Instrument Cluster Display Location And Controls

The vehicle's instrument cluster is equipped with an instrument cluster display (base or premium cluster), which offers useful information to the driver.

The instrument cluster display controls allows the driver to select information by pushing the directional buttons mounted on the steering wheel:

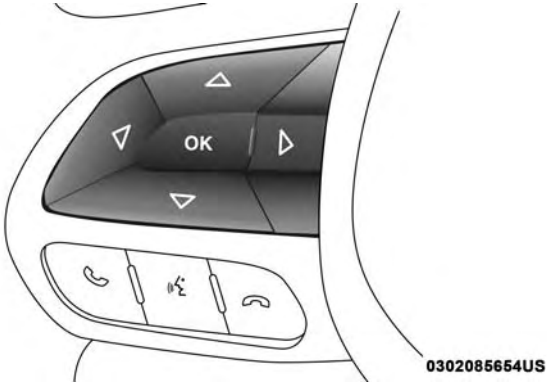

Instrument Cluster Display Control Buttons

- *Up Arrow Button*

△ Push and release the **up** arrow button to scroll upward through the Main Menu items.

- *Down Arrow Button*

▽ Push and release the **down** arrow button to scroll downward through the Main Menu items.

- *Right Arrow Button*

▷ Push and release the **right** arrow button to access the information screens or submenu screens of a main menu item.

- *Back/Left Arrow Button*

◁ Push and release the **left** arrow button to access the information screens or submenu screens of a main menu item.

- *OK Button*

Push the **OK** button to access/select the information screens or submenu screens of a Main Menu item. Push and hold the **OK** button for two seconds to reset displayed/selected features that can be reset.

The instrument cluster display (base/premium cluster) features a driver-interactive display that is located in the center of the instrument cluster, and may include the following menu/submenu items:

- Speedometer
- Vehicle Info
- Driver Assist — If Equipped
- Fuel Economy
- Trip (Trip A/Trip B)
- Stop/Start — If Equipped
- Audio
- Messages
- Screen Setup

Oil Life Reset

- Your vehicle is equipped with an engine oil change indicator system. The “Oil Change Required” message will display for approximately five seconds after a single chime has sounded, to indicate the next scheduled oil change interval. The engine oil change indicator system is duty cycle based, which means the engine oil change interval may fluctuate, dependent upon your personal driving style.
- Unless reset, this message will continue to display each time the ignition is cycled to the ON/RUN position.
- To reset the oil change indicator after performing the scheduled maintenance, refer to the following procedure.

Oil Life Reset

Without pressing the brake pedal, push the ENGINE START/STOP button and place the ignition in the ON/RUN position (do not start the vehicle.)

1. Push the **OK** button to enter the instrument cluster display menu screen.
2. Push and release the **down** arrow button to access the ”Oil Life” menu screen.
3. Push the **left** arrow button or right arrow button to access the “Vehicle Info” submenu.
4. Hold the **OK** button to reset the “Oil Life” to 100%.
5. Push the **up** arrow button to exit the instrument cluster display menu screen.

Secondary Method For Oil Life Reset Procedure

1. Without pushing the brake pedal, place the ignition in the ON/RUN position (do not start the engine).
2. Fully press the accelerator pedal, slowly, three times within ten seconds.
3. Without pushing the brake pedal, place the ignition in the OFF/LOCK position.

NOTE: If the indicator message illuminates when you start the vehicle, the oil change indicator system did not reset. If necessary, repeat this procedure.

KeySense Cluster Messages — If Equipped

When the KeySense key is in use there will be:

- Continuous, dedicated telltale
- Unique Display Splash Screen

With KeySense in use there will be multiple associated messages shown in the following table:

Setting	Instrument Cluster Display Message
None – With vehicle ignition ON	"KeySense in use. Max vehicle speed set to xx MPH/or km/h"
Max Vehicle Speed	• "Max speed reached. KeySense in use" supported by a chime • "Approaching max speed xx MPH/km" supported by a chime
Start Up Fuel Alert message	"Range to empty xxx miles or km"
Early Low Fuel Alert Message	"Fuel Low"
ParkSense	"Feature cannot be disabled. KeySense in use"
Blind Spot	"Feature cannot be disabled. KeySense in use"
Forward Collision Warning	"Feature cannot be disabled. KeySense in use"

Instrument Cluster Display Menu Items

NOTE: The instrument cluster display menu items display in the center of the instrument cluster. Menu items may vary depending on your vehicle features.

Speedometer

Push and release the **up** or **down** arrow button until Speedometer is highlighted in the instrument cluster display. Push and release the **OK** button to toggle between MPH and km/h.

Vehicle Info

Push and release the **up** or **down** arrow button until Vehicle Info is highlighted in the instrument cluster display. Push the **left** or **right** arrow button to scroll through the following information submenus:

Tire Pressure

If tire pressure is **OK** for all tires, a vehicle ICON is displayed with tire pressure values in each corner of the ICON.

If one or more tires have low pressure, "Inflate Tire To XX" is displayed with the vehicle ICON, and the tire pressure values in each corner of the ICON with the pressure value of the low tire displayed in a different color than the other tire pressure value.

If the Tire Pressure system requires service, "Service Tire Pressure System" is displayed.

Tire PSI is an information only function and cannot be reset. Refer to "Tire Pressure Monitoring System (TPMS)" under "Safety" for further information.

Coolant Temperature

Displays the actual coolant temperature.

Transmission Temperature

Displays the actual transmission temperature.

Oil Temperature

Displays the actual oil temperature.

Oil Pressure

Displays the actual oil pressure.

Battery Voltage

Displays the actual battery voltage.

Engine Hours — If Equipped

Displays the number of hours of engine operation.

Oil Life

To reset the Oil Life, you must hold the OK button. The "Hold OK to Reset" instruction will be displayed at all times, but the following conditions will need to be met in order to reset Oil Life:

- The vehicle must be off
- The ignition must be in the ON/RUN position

If the conditions are met, holding the **OK** button will reset the gauge and the numeric display will return to 100%.

If the conditions are not met, a popup message will display for 5 seconds, describing the required conditions, and then the Oil Life screen will reappear.

Driver Assist

Push and release the **up** or **down** arrow button until the Driver Assist display icon is highlighted in the instrument cluster display. Refer to "Adaptive Cruise Control (ACC) — If Equipped" in "Starting And Operating" for further information.

Fuel Economy

Push and release the **up** or **down** arrow button until the Fuel Economy Menu item is highlighted in the instrument cluster display. The Fuel Economy Menu will display the following:

- Two sub menu pages that can be toggled between using the **left** and **right** arrow buttons; one with Current Value displayed and one without the Current Value displayed:
  - Average Fuel Economy (MPG, L/100 km, or km/l)
  - Range To Empty (miles or km)
  - Current Fuel Economy (MPG, L/100 km, or km/l)
  - The Max and Min values will correspond to the particular engine requirements
- Hold **OK** to reset average fuel economy information.

Trip Info

Push and release the **up** or **down** arrow button until the Trip Menu item is highlighted in the instrument cluster display. Push the **left** or **right** arrow button to scroll through the Trip A and Trip B submenus. The Trip information will display the following:

- Distance
- Average Fuel Economy

- Elapsed Time

Hold the **OK** button to reset feature information.

Stop/Start – If Equipped

Push and release the **up** or **down** arrow button until the Stop/Start menu title is displayed in the instrument cluster display.

Audio

Push and release the **up** or **down** arrow button until the Audio Menu displays in the instrument cluster display.

Messages

Push and release the **up** or **down** arrow button until Messages is highlighted in the instrument cluster display. This feature shows the number of stored warning messages. Pushing the **right** arrow button will allow you to see what the stored messages are.

NOTE: The popup messages indicate the status of the system and/or the conditions that need to be met. Messages remain in the stored stack until condition is cleared.

Screen Setup

Push and release the **up** or **down** arrow button until the Screen Setup Menu displays in the instrument cluster display. Push and release the **OK** button to enter the submenus. The Screen Setup feature allows you to change what information is displayed in the instrument cluster as well as the location that information is displayed.

Premium Instrument Cluster Display Screen Setup Options:	
1 — Lower Left	• None • Compass (Default) • Outside Temp. • Time • Range • Average/Current (MPG, L/100km, or km/L) • Trip A Distance • Trip B Distance

Premium Instrument Cluster Display Screen Setup Options:	
2 — Center	• None • Compass • Outside Temp. • Time • Range • Average/Current (MPG, L/100km, or km/L) • Trip A Distance • Trip B Distance • Audio • Digital Speed • Menu Title (Default)
3 — Lower Right	• None • Compass • Outside Temp. (Default) • Time • Range • Average/Current (MPG, L/100km, or km/L) • Trip A Distance • Trip B Distance
4 — Odometer (Premium Instrument Cluster)	• Show — Default • Hide (Odometer will still appear when door is open)
5 — Defaults	• Restore • Cancel

Base Instrument Cluster Display Screen Setup Options:	
1 — Upper Left	• None • Compass (Default) • Outside Temp. • Time • Range • Average/Current (MPG, L/100km, or km/L)
2 — Upper Right	• None • Compass • Outside Temp (Default) • Time • Range • Average/Current (MPG, L/100km, or km/L)
3 — Center	• None • Compass • Outside Temp. • Time • Range • Average/Current (MPG, L/100km, or km/L) • Trip A Distance • Trip B Distance • Audio Menu Title • Menu Title (Default) • Digital Speed

Base Instrument Cluster Display Screen Setup Options:	
4 — Defaults	• Restore • Cancel

Battery Saver On/Battery Saver Mode Message — Electrical Load Reduction Actions — If Equipped

This vehicle is equipped with an Intelligent Battery Sensor (IBS) to perform additional monitoring of the electrical system and status of the vehicle battery.

In cases when the IBS detects charging system failure, or the vehicle battery conditions are deteriorating, electrical load reduction actions will take place to extend the driving time and distance of the vehicle. This is done by reducing power to or turning off non-essential electrical loads.

Load reduction is only active when the engine is running. It will display a message if there is a risk of battery depletion to the point where the vehicle may stall due to lack of electrical supply, or will not restart after the current drive cycle.

When load reduction is activated, the message “Battery Saver On” or “Battery Saver Mode” will appear in the instrument cluster display.

These messages indicate the vehicle battery has a low state of charge and continues to lose electrical charge at a rate that the charging system cannot sustain.

NOTE:

- The charging system is independent from load reduction. The charging system performs a diagnostic on the charging system continuously.
- If the Battery Charge Warning Light is on it may indicate a problem with the charging system. Refer to “Battery Charge Warning Light” in “Warning Lights And Messages” located in ”Getting To Know Your Instrument Panel” for further information.

The electrical loads that may be switched off (if equipped), and vehicle functions which can be effected by load reduction:

- Heated Seat/Vented Seats/Heated Wheel
- Heated/Cooled Cup Holders — If Equipped
- Rear Defroster And Heated Mirrors

- HVAC System
- 150W Power Inverter System
- Audio and Telematics System

Loss of the battery charge may indicate one or more of the following conditions:

- The charging system cannot deliver enough electrical power to the vehicle system because the electrical loads are larger than the capability of charging system. The charging system is still functioning properly.
- Turning on all possible vehicle electrical loads (e.g. HVAC to max settings, exterior and interior lights, overloaded power outlets +12V, 150W, USB ports) during certain driving conditions (city driving, towing, frequent stopping).
- Installing options like additional lights, upfitter electrical accessories, audio systems, alarms and similar devices.
- Unusual driving cycles (short trips separated by long parking periods).
- The vehicle was parked for an extended period of time (weeks, months).
- The battery was recently replaced and was not charged completely.
- The battery was discharged by an electrical load left on when the vehicle was parked.
- The battery was used for an extended period with the engine not running to supply radio, lights, chargers, +12V portable appliances like vacuum cleaners, game consoles and similar devices.

What to do when an electrical load reduction action message is present ("Battery Saver On" or "Battery Saver Mode")

During a trip:

- Reduce power to unnecessary loads if possible:
  - Turn off redundant lights (interior or exterior)
  - Check what may be plugged in to power outlets +12V, 150W, USB ports
  - Check HVAC settings (blower, temperature)
  - Check the audio settings (volume)

After a trip:

- Check if any aftermarket equipment was installed (additional lights, upfitter electrical accessories, audio systems, alarms) and review specifications if any (load and Ignition Off Draw currents).
- Evaluate the latest driving cycles (distance, driving time and parking time).
- The vehicle should have service performed if the message is still present during consecutive trips and the evaluation of the vehicle and driving pattern did not help to identify the cause.

TRIP COMPUTER

The Trip Computer is located in the instrument cluster display. Push and release the up or down arrow button until "Trip Info" is highlighted in the instrument cluster display. Push OK to enter the menu. Navigate between Trip A or Trip B by using the right and left arrows.

For each trip the following information will be displayed:

Trip A

- Shows the total distance traveled for Trip A since the last reset.
- Shows the Average MPG for Trip A since the last reset.
- Shows the elapsed time traveled for Trip A since the last reset. Elapsed time will increment when the ignition switch is in the ON or START position.

Trip B

- Shows the total distance traveled for Trip B since the last reset.
- Shows the Average MPG for Trip B since the last reset.
- Shows the elapsed time traveled for Trip B since the last reset. Elapsed time will increment when the ignition switch is in the ON or START position.

To Reset A Trip Function

Push and hold the OK button to reset the currently displayed trip.

WARNING LIGHTS AND MESSAGES

The warning/indicator lights will illuminate in the instrument panel together with a dedicated message and/or acoustic signal when applicable. These indications are indicative and precautionary and as such must not be considered as exhaustive and/or alternative to the information contained in the Owner's Manual, which you are

advised to read carefully in all cases. Always refer to the information in this chapter in the event of a failure indication. All active telltales will display first if applicable. The system check menu may appear different based upon equipment options and current vehicle status. Some telltales are optional and may not appear.

Red Warning Lights

— Air Bag Warning Light

This warning light will illuminate to indicate a fault with the air bag, and will turn on for four to eight seconds as a bulb check when the ignition is placed in the ON/RUN or ACC/ON/RUN position. This light will illuminate with a single chime when a fault with the air bag has been detected, it will stay on until the fault is cleared. If the light is either not on during startup, stays on, or turns on while driving, have the system inspected at an authorized dealer as soon as possible.

BRAKE — Brake Warning Light

This warning light monitors various brake functions, including brake fluid level and parking brake application. If the brake light turns on it may indicate that the parking brake is applied, that the brake fluid level is low, or that there is a problem with the anti-lock brake system reservoir.

If the light remains on when the parking brake has been disengaged, and the fluid level is at the full mark on the master cylinder reservoir, it indicates a possible brake hydraulic system malfunction or that a problem with the Brake Booster has been detected by the Anti-Lock Brake System (ABS) / Electronic Stability Control (ESC) system. In this case, the light will remain on until the condition has been corrected. If the problem is related to the brake booster, the ABS pump will run when applying the brake, and a brake pedal pulsation may be felt during each stop.

The dual brake system provides a reserve braking capacity in the event of a failure to a portion of the hydraulic system. A leak in either half of the dual brake system is indicated by the Brake Warning Light, which will turn on when the brake fluid level in the master cylinder has dropped below a specified level.

The light will remain on until the cause is corrected.

NOTE: The light may flash momentarily during sharp cornering maneuvers, which change fluid level conditions. The vehicle should have service performed, and the brake fluid level checked.

If brake failure is indicated, immediate repair is necessary.

WARNING!

Driving a vehicle with the red brake light on is dangerous. Part of the brake system may have failed. It will take longer to stop the vehicle. You could have a collision. Have the vehicle checked immediately.

Vehicles equipped with the Anti-Lock Brake System (ABS) are also equipped with Electronic Brake Force Distribution (EBD). In the event of an EBD failure, the Brake Warning Light will turn on along with the ABS Light. Immediate repair to the ABS system is required.

Operation of the Brake Warning Light can be checked by turning the ignition switch from the OFF position to the ON/RUN position. The light should illuminate for approximately two seconds. The light should then turn off unless the parking brake is applied or a brake fault is detected. If the light does not illuminate, have the light inspected by an authorized dealer.

The light also will turn on when the parking brake is applied with the ignition switch in the ON/RUN position.

NOTE: This light shows only that the parking brake is applied. It does not show the degree of brake application.

— Door Open Warning Light — If Equipped

This warning light will illuminate when a door is ajar/open and not fully closed. This indicator will reflect which doors are open.

NOTE: If the vehicle is moving, there will also be a single chime.

— Electric Power Steering Fault Warning Light

This warning light will turn on when there's a fault with the EPS (Electric Power Steering) system. Refer to "Power Steering" in "Starting And Operating" for further information.

WARNING!

Continued operation with reduced assist could pose a safety risk to yourself and others. Service should be obtained as soon as possible.

— Electronic Throttle Control (ETC) Warning Light

This warning light will illuminate to indicate a problem with the Electronic Throttle Control (ETC) system. If a problem is detected while the vehicle is running, the light will either stay on or flash depending on the nature of the problem. Cycle the ignition when the vehicle is safely and completely stopped and the transmission is placed in the PARK position. The light should turn off. If the light remains on with the vehicle running, your vehicle will usually be drivable; however, see an authorized dealer for service as soon as possible.

NOTE: This light may turn on if the accelerator and brake pedals are pressed at the same time.

If the light continues to flash when the vehicle is running, immediate service is required and you may experience reduced performance, an elevated/rough idle, or engine stall and your vehicle may require towing. The light will come on when the ignition is placed in the ON/RUN or ACC/ON/RUN position and remain on briefly as a bulb check. If the light does not come on during starting, have the system checked by an authorized dealer.

— Engine Coolant Temperature Warning Light

This warning light warns of an overheated engine condition. If the engine coolant temperature is too high, this indicator will illuminate and a single chime will sound. If the temperature reaches the upper limit, a continuous chime will sound for four minutes or until the engine is able to cool: whichever comes first.

If the light turns on while driving, safely pull over and stop the vehicle. If the A/C system is on, turn it off. Also, shift the transmission into NEUTRAL and idle the vehicle. If the temperature reading does not return to normal, turn the engine off immediately and call for service.

Refer to “If Your Engine Overheats” in “In Case Of Emergency” for further information.

— Battery Charge Warning Light

This warning light will illuminate when the battery is not charging properly. If it stays on while the engine is running, there may be a malfunction with the charging system. Contact an authorized dealer as soon as possible.

This indicates a possible problem with the electrical system or a related component.

— Hood Open Warning Light

This warning light will illuminate when the hood is left open and not fully closed.

NOTE: If the vehicle is moving, there will also be a single chime.

— Liftgate Open Warning Light

This warning light will illuminate when the liftgate is open.

NOTE: If the vehicle is moving, there will also be a single chime.

— Seat Belt Reminder Warning Light

This warning light indicates when the driver or passenger seat belt is unbuckled. When the ignition is first placed in the ON/RUN or ACC/ON/RUN position and if the driver's seat belt is unbuckled, a chime will sound and the light will turn on. When driving, if the driver or front passenger seat belt remains unbuckled, the Seat Belt Reminder Light will flash or remain on continuously and a chime will sound.

Refer to "Occupant Restraint Systems" in "Safety" for further information.

— Transmission Temperature Warning Light — If Equipped

This warning light will illuminate to warn of a high transmission fluid temperature. This may occur with strenuous usage such as trailer towing. If this light turns on, stop the vehicle and run the engine at idle or slightly faster, with the transmission in PARK or NEUTRAL, until the light turns off. Once the light turns off, you may continue to drive normally.

WARNING!

If you continue operating the vehicle when the Transmission Temperature Warning Light is illuminated you could cause the fluid to boil over, come in contact with hot engine or exhaust components and cause a fire.

CAUTION!

Continuous driving with the Transmission Temperature Warning Light illuminated will eventually cause severe transmission damage or transmission failure.

● — Vehicle Security Warning Light — If Equipped

This warning light will flash at a fast rate for approximately 15 seconds when the vehicle security alarm is arming, and then will flash slowly until the vehicle is disarmed.

— Oil Temperature Warning Light

This warning light will illuminate to indicate the engine oil temperature is high. If the light turns on while driving, stop the vehicle and shut off the engine as soon as possible. Wait for oil temperature to return to normal levels.

— Oil Pressure Warning Light

This warning light will illuminate to indicate low engine oil pressure. If the light turns on while driving, stop the vehicle, shut off the engine as soon as possible, and contact an authorized dealer. A chime will sound when this light turns on.

Do not operate the vehicle until the cause is corrected. This light does not indicate how much oil is in the engine. The engine oil level must be checked under the hood.

Yellow Warning Lights

! — Adaptive Cruise Control (ACC) Fault Warning Light — If Equipped

This warning light will illuminate to indicate a fault in the ACC system. Contact a local authorized dealer for service.

For further information, refer to “Adaptive Cruise Control (ACC)” in “Starting And Operating.”

(ABS) — Anti-Lock Brake (ABS) Warning Light

This warning light monitors the Anti-Lock Brake System (ABS). The light will turn on when the ignition is placed in the ON/RUN or ACC/ON/RUN position and may stay on for as long as four seconds.

If the ABS light remains on or turns on while driving, then the Anti-Lock portion of the brake system is not functioning and service is required as soon as possible. However, the conventional brake system will continue to operate normally, assuming the Brake Warning Light is not also on.

If the ABS light does not turn on when the ignition is placed in the ON/RUN or ACC/ON/RUN position, have the brake system inspected by an authorized dealer.

— Electronic Park Brake Warning Light

This warning light will illuminate to indicate the Electronic Park Brake is not functioning properly and service is required. Contact an authorized dealer.

— Electronic Stability Control (ESC) Off Warning Light — If Equipped

This warning light indicates the Electronic Stability Control (ESC) is off.

Each time the ignition is turned to ON/RUN or ACC/ON/RUN, the ESC system will be on, even if it was turned off previously.

— Electronic Stability Control (ESC) Active Warning Light — If Equipped

This warning light will indicate when the Electronic Stability Control system is Active. The "ESC Indicator Light" in the instrument cluster will come on when the ignition is placed in the ON/RUN or ACC/ON/RUN position, and when ESC is activated. It should go out with the engine running. If the "ESC Indicator Light" comes on continuously with the engine running, a malfunction has been detected in the ESC system. If this warning light remains on after several ignition cycles, and the vehicle has been driven several miles (kilometers) at speeds greater than 30 mph (48 km/h), see an authorized dealer as soon as possible to have the problem diagnosed and corrected.

- The "ESC Off Indicator Light" and the "ESC Indicator Light" come on momentarily each time the ignition is placed in the ON/RUN or ACC/ON/RUN position.
- The ESC system will make buzzing or clicking sounds when it is active. This is normal; the sounds will stop when ESC becomes inactive.
- This light will come on when the vehicle is in an ESC event.

— Service LaneSense Warning Light — If Equipped

This warning light will illuminate when the LaneSense system is not operating and requires service. Please see an authorized dealer.

— LaneSense Warning Light — If Equipped

The LaneSense Warning Light will be solid yellow when the vehicle is approaching a lane marker. The warning light will flash when the vehicle is crossing the lane marker.

Refer to "LaneSense — If Equipped" in "Starting And Operating" for further information.

— Low Fuel Warning Light

When the fuel level reaches approximately 1.85 gal (7 L) this warning light will turn on, and remain on until fuel is added.

A single warning chime will sound with Low Fuel Warning.

— Low Washer Fluid Warning Light — If Equipped

This warning light will illuminate when the windshield washer fluid is low.

— Engine Check/Malfunction Indicator Warning Light (MIL)

The Engine Check/Malfunction Indicator Light (MIL) is a part of an Onboard Diagnostic System called OBD II that monitors engine and automatic transmission control systems. This warning light will illuminate when the ignition is in the ON/RUN position before engine start. If the bulb does not come on when turning the ignition switch from OFF to ON/RUN, have the condition checked promptly.

Certain conditions, such as a loose or missing gas cap, poor quality fuel, etc., may illuminate the light after engine start. The vehicle should be serviced if the light stays on through several typical driving styles. In most situations, the vehicle will drive normally and will not require towing.

When the engine is running, the MIL may flash to alert serious conditions that could lead to immediate loss of power or severe catalytic converter damage. The vehicle should be serviced by an authorized dealer as soon as possible if this occurs.

WARNING!

A malfunctioning catalytic converter, as referenced above, can reach higher temperatures than in normal operating conditions. This can cause a fire if you drive slowly or park over flammable substances such as dry plants, wood, cardboard, etc. This could result in death or serious injury to the driver, occupants or others.

CAUTION!

Prolonged driving with the Malfunction Indicator Light (MIL) on could cause damage to the vehicle control system. It also could affect fuel economy and driveability. If the MIL is flashing, severe catalytic converter damage and power loss will soon occur. Immediate service is required.

— Service Forward Collision Warning (FCW) Light — If Equipped

This warning light will illuminate to indicate a fault in the Forward Collision Warning System. Contact an authorized dealer for service.

Refer to "Forward Collision Warning (FCW)" in "Safety" for further information.

— Service Stop/Start System Warning Light — If Equipped

This warning light will illuminate when the Stop/Start system is not functioning properly and service is required. Contact an authorized dealer for service.

— Tire Pressure Monitoring System (TPMS) Warning Light

The warning light switches on and a message is displayed to indicate that the tire pressure is lower than the recommended value and/or that slow pressure loss is occurring. In these cases, optimal tire duration and fuel consumption may not be guaranteed.

Should one or more tires be in the condition mentioned above, the display will show the indications corresponding to each tire.

CAUTION!

Do not continue driving with one or more flat tires as handling may be compromised. Stop the vehicle, avoiding sharp braking and steering. If a tire puncture occurs, repair immediately using the dedicated tire repair kit and contact an authorized dealer as soon as possible.

Each tire, including the spare (if provided), should be checked monthly when cold and inflated to the inflation pressure recommended by the vehicle manufacturer on the vehicle placard or tire inflation pressure label. (If your vehicle has tires of a different size than the size indicated on the vehicle placard or tire inflation pressure label, you should determine the proper tire inflation pressure for those tires.)

As an added safety feature, your vehicle has been equipped with a Tire Pressure Monitoring System (TPMS) that illuminates a low tire pressure telltale when one or

more of your tires is significantly under-inflated. Accordingly, when the low tire pressure telltale illuminates, you should stop and check your tires as soon as possible, and inflate them to the proper pressure. Driving on a significantly under-inflated tire causes the tire to overheat and can lead to tire failure. Under-inflation also reduces fuel efficiency and tire tread life, and may affect the vehicle's handling and stopping ability.

Please note that the TPMS is not a substitute for proper tire maintenance, and it is the driver's responsibility to maintain correct tire pressure, even if under-inflation has not reached the level to trigger illumination of the TPMS low tire pressure telltale.

Your vehicle has also been equipped with a TPMS malfunction indicator to indicate when the system is not operating properly. The TPMS malfunction indicator is combined with the low tire pressure telltale. When the system detects a malfunction, the telltale will flash for approximately one minute and then remain continuously illuminated. This sequence will continue upon subsequent vehicle start-ups as long as the malfunction exists. When the malfunction indicator is illuminated, the system may not be able to detect or signal low tire pressure as intended. TPMS malfunctions may occur for a variety of reasons, including the installation of replacement or alternate tires or wheels on the vehicle that prevent the TPMS from functioning properly. Always check the TPMS malfunction telltale after replacing one or more tires or wheels on your vehicle to ensure that the replacement or alternate tires and wheels allow the TPMS to continue to function properly.

CAUTION!

The TPMS has been optimized for the original equipment tires and wheels. TPMS pressures and warning have been established for the tire size equipped on your vehicle. Undesirable system operation or sensor damage may result when using replacement equipment that is not of the same size, type, and/or style. Aftermarket wheels can cause sensor damage. Using aftermarket tire sealants may cause the Tire Pressure Monitoring System (TPMS) sensor to become inoperable. After using an aftermarket tire sealant it is recommended that you take your vehicle to your authorized dealer to have your sensor function checked.

Yellow Indicator Lights

— Forward Collision Warning Off Indicator Light — If Equipped

This indicator light illuminates to indicate that Forward Collision Warning is off.

Green Indicator Lights

— Adaptive Cruise Control (ACC) Set With Target Vehicle Detected Light — If Equipped

This indicator light will illuminate when the Adaptive Cruise Control speed is SET and the target vehicle is detected. Refer to "Adaptive Cruise Control (ACC) — If Equipped" in "Starting And Operating" for further information.

— Adaptive Cruise Control (ACC) Set With No Target Detected Light — If Equipped

This indicator light will illuminate when the Adaptive Cruise Control speed is SET and there is no target vehicle detected. Refer to "Adaptive Cruise Control (ACC) — If Equipped" in "Starting And Operating" for further information.

— Cruise Control Set Indicator Light — If Equipped

This indicator light will illuminate when the cruise control is set to the desired speed. Refer to "Speed Control" in "Starting And Operating" for further information.

— Front Fog Indicator Light — If Equipped

This indicator light will illuminate when the front fog lights are on.

— KeySense Indicator Light — If Equipped

The KeySense indicator is illuminated when a KeySense key is detected upon startup of the vehicle. The indicator will remain lit for the entire key cycle as a reminder that the KeySense key is in use. While the KeySense key is in use, the vehicle will respond to settings associated with the KeySense profile. Refer to "Keys" in "Getting to Know Your Vehicle" for further information.

— LaneSense Indicator Light — If Equipped

The LaneSense indicator light illuminates solid green when both lane markings have been detected and the system is "armed" and ready to provide visual and torque warnings if an unintentional lane departure occurs.

Refer to "LaneSense — If Equipped" in "Starting And Operating" for further information.

Ⓐ — Stop/Start Active Indicator Light — If Equipped

This indicator light will illuminate when the Stop/Start function is in "Autostop" mode.

— Park/Headlight On Indicator Light

This indicator light will illuminate when the park lights or headlights are turned on.

— Turn Signal Indicator Lights

When the left or right turn signal is activated, the turn signal indicator will flash independently and the corresponding exterior turn signal lamps will flash. Turn signals can be activated when the multifunction lever is moved down (left) or up (right).

NOTE:

- A continuous chime will sound if the vehicle is driven more than 1 mile (1.6 km) with either turn signal on.
- Check for an inoperative outside light bulb if either indicator flashes at a rapid rate.

Blue Indicator Lights

— High Beam Indicator Light

This indicator light will illuminate to indicate that the high beam headlights are on. With the low beams activated, push the multifunction lever forward (toward the front of the vehicle) to turn on the high beams. Pull the multifunction lever rearward (toward the rear of the vehicle) to turn off the high beams. If the high beams are off, pull the lever toward you for a temporary high beam on, "flash to pass" scenario.

White Indicator Lights

— Adaptive Cruise Control (ACC) Ready Light — If Equipped

This indicator light will illuminate when the vehicle equipped with Adaptive Cruise Control (ACC) has been turned on but not set. Refer to "Adaptive Cruise Control (ACC) — If Equipped" in "Starting And Operating" for further information.

— Cruise Control Ready Indicator

This indicator light will illuminate when the cruise control is ready, but not set. Refer to "Speed Control" in "Starting And Operating" for further information.

— LaneSense Indicator Light — If Equipped

When the LaneSense system is ON, but not armed, the LaneSense indicator light illuminates solid white. This occurs when only left, right, or neither lane line has been detected. If a single lane line is detected, the system is ready to provide only visual warnings if an unintentional lane departure occurs on the detected lane line.

Refer to "LaneSense — If Equipped" in "Starting And Operating" for further information.

XXX MPH — Set Speed Display

The Set Speed Display indicator light indicates the set speed for the Speed Control and Adaptive Cruise Control (ACC) settings.

ONBOARD DIAGNOSTIC SYSTEM — OBD II

Your vehicle is equipped with a sophisticated Onboard Diagnostic system called OBD II. This system monitors the performance of the emissions, engine, and automatic transmission control systems. When these systems are operating properly, your vehicle will provide excellent performance and fuel economy, as well as emissions well within current government regulations.

If any of these systems require service, the OBD II system will turn on the Malfunction Indicator Light (MIL). It will also store diagnostic codes and other information to assist your service technician in making repairs. Although your vehicle will usually be drivable and not need towing, see an authorized dealer for service as soon as possible.

CAUTION!

- **Prolonged driving with the MIL on could cause further damage to the emission control system. It could also affect fuel economy and driveability. The vehicle must be serviced before any emissions tests can be performed.**
- **If the MIL is flashing while the vehicle is running, severe catalytic converter damage and power loss will soon occur. Immediate service is required.**

Onboard Diagnostic System (OBD II) Cybersecurity

Your vehicle is required to have an Onboard Diagnostic system (OBD II) and a connection port to allow access to information related to the performance of your emissions controls. Authorized service technicians may need to access this information to assist with the diagnosis and service of your vehicle and emissions system.

WARNING!

- **ONLY an authorized service technician should connect equipment to the OBD II connection port in order to read the VIN, diagnose, or service your vehicle.**
- **If unauthorized equipment is connected to the OBD II connection port, such as a driver-behavior tracking device, it may:**
  - **Be possible that vehicle systems, including safety related systems, could be impaired or a loss of vehicle control could occur that may result in an accident involving serious injury or death.**
  - **Access, or allow others to access, information stored in your vehicle systems, including personal information.**

For further information, refer to “Cybersecurity” in “Multimedia”.

EMISSIONS INSPECTION AND MAINTENANCE PROGRAMS

In some localities, it may be a legal requirement to pass an inspection of your vehicle’s emissions control system. Failure to pass could prevent vehicle registration.

For states that require an Inspection and Maintenance (I/M), this check verifies the “Malfunction Indicator Light (MIL)” is functioning and is not on when the engine is running, and that the OBD II system is ready for testing.

Normally, the OBD II system will be ready. The OBD II system may **not** be ready if your vehicle was recently serviced, recently had a dead battery or a battery replacement. If the OBD II system should be determined not ready for the I/M test, your vehicle may fail the test.

Your vehicle has a simple ignition actuated test, which you can use prior to going to the test station. To check if your vehicle’s OBD II system is ready, you must do the following:

1. Cycle the ignition switch to the ON position, but do not crank or start the engine.

NOTE: If you crank or start the engine, you will have to start this test over.

2. As soon as you cycle the ignition switch to the ON position, you will see the "Malfunction Indicator Light (MIL)" symbol come on as part of a normal bulb check.
3. Approximately 15 seconds later, one of two things will happen:

- The MIL will flash for about ten seconds and then return to being fully illuminated until you turn OFF the ignition or start the engine. This means that your vehicle's OBD II system is **not ready** and you should **not** proceed to the I/M station.
- The MIL will not flash at all and will remain fully illuminated until you place the ignition in the off position or start the engine. This means that your vehicle's OBD II system is **ready** and you can proceed to the I/M station.

If your OBD II system is **not ready,** you should see an authorized dealer or repair facility. If your vehicle was recently serviced or had a battery failure or replacement, you may need to do nothing more than drive your vehicle as you normally would in order for your OBD II system to update. A recheck with the above test routine may then indicate that the system is **now ready**.

Regardless of whether your vehicle's OBD II system is ready or not, if the MIL is illuminated during normal vehicle operation you should have your vehicle serviced before going to the I/M station. The I/M station can fail your vehicle because the MIL is on with the engine running.

SAFETY

CONTENTS

■ SAFETY FEATURES 220

□ Anti-Lock Brake System (ABS) 220

□ Electronic Brake Control System 221

■ AUXILIARY DRIVING SYSTEMS 229

□ Blind Spot Monitoring (BSM) — If Equipped . . .229

□ Forward Collision Warning (FCW) With Mitigation — If Equipped 237

□ Tire Pressure Monitor System (TPMS) 241

■ OCCUPANT RESTRAINT SYSTEMS 246

□ Occupant Restraint Systems Features 246

□ Important Safety Precautions 246

□ Seat Belt Systems 247

□ Supplemental Restraint Systems (SRS) 263

□ Child Restraints 283

□ Transporting Pets 311

■ SAFETY TIPS 311

□ Transporting Passengers 311

□ Exhaust Gas 312

□ Safety Checks You Should Make Inside The Vehicle 312

□ Periodic Safety Checks You Should Make Outside The Vehicle 315

SAFETY FEATURES

Anti-Lock Brake System (ABS)

The Anti-Lock Brake System (ABS) provides increased vehicle stability and brake performance under most braking conditions. The system automatically prevents wheel lock, and enhances vehicle control during braking.

The ABS performs a self-check cycle to ensure that the ABS is working properly each time the vehicle is started and driven. During this self-check, you may hear a slight clicking sound as well as some related motor noises.

ABS is activated during braking when the system detects one or more wheels begin to lock. Road conditions such as ice, snow, gravel, bumps, railroad tracks, loose debris, or panic stops may increase the likelihood of ABS activation(s).

You also may experience the following when ABS activates:

- The ABS motor noise (it may continue to run for a short time after the stop).
- The clicking sound of solenoid valves.
- Brake pedal pulsations.
- A slight drop of the brake pedal at the end of the stop.

These are all normal characteristics of ABS.

WARNING!

- **The ABS contains sophisticated electronic equipment that may be susceptible to interference caused by improperly installed or high output radio transmitting equipment. This interference can cause possible loss of anti-lock braking capability. Installation of such equipment should be performed by qualified professionals.**
- **Pumping of the Anti-Lock Brakes will diminish their effectiveness and may lead to a collision. Pumping makes the stopping distance longer. Just press firmly on your brake pedal when you need to slow down or stop.**
- **The ABS cannot prevent the natural laws of physics from acting on the vehicle, nor can it increase braking or steering efficiency beyond that afforded by the condition of the vehicle brakes and tires or the traction afforded.**
- **The ABS cannot prevent collisions, including those resulting from excessive speed in turns, following another vehicle too closely, or hydroplaning.**

(Continued)

WARNING! *(Continued)*

- **The capabilities of an ABS equipped vehicle must never be exploited in a reckless or dangerous manner that could jeopardize the user's safety or the safety of others.**

ABS is designed to function with the OEM tires. Modification may result in degraded ABS performance.

Anti-Lock Brake Warning Light

The yellow "Anti-Lock Brake Warning Light" will turn on when the ignition is turned to the ON/RUN mode and may stay on for as long as four seconds.

If the "Anti-Lock Brake Warning Light" remains on or comes on while driving, it indicates that the anti-lock portion of the brake system is not functioning and that service is required. However, the conventional brake system will continue to operate normally if the "Anti-Lock Brake Warning Light" is on.

If the "Anti-Lock Brake Warning Light" is on, the brake system should be serviced as soon as possible to restore the benefits of anti-lock brakes. If the "Anti-Lock Brake Warning Light" does not come on when the ignition is turned to the ON/RUN mode, have the light repaired as soon as possible.

Electronic Brake Control System

Your vehicle is equipped with an advanced Electronic Brake Control system (EBC). This system includes Electronic Brake Force Distribution (EBD), Anti-Lock Brake System (ABS), Brake Assist System (BAS), Hill Start Assist (HSA), Traction Control System (TCS), Electronic Stability Control (ESC), and Electronic Roll Mitigation (ERM). These systems work together to enhance both vehicle stability and control in various driving conditions.

Your vehicle may also be equipped with Ready Alert Braking (RAB), Rain Brake Support (RBS), Trailer Sway Control (TSC), and Dynamic Steering Torque (DST).

Traction Control System (TCS)

This system monitors the amount of wheel spin of each of the driven wheels. If wheel spin is detected, the TCS may apply brake pressure to the spinning wheel(s) and/or reduce vehicle power to provide enhanced acceleration and stability. A feature of the TCS, Brake Limited Differential (BLD), functions similar to a limited slip differential

and controls the wheel spin across a driven axle. If one wheel on a driven axle is spinning faster than the other, the system will apply the brake of the spinning wheel. This will allow more vehicle torque to be applied to the wheel that is not spinning. BLD may remain enabled even if TCS and ESC are in a reduced mode.

Brake Assist System (BAS)

The BAS is designed to optimize the vehicle's braking capability during emergency braking maneuvers. The system detects an emergency braking situation by sensing the rate and amount of brake application and then applies optimum pressure to the brakes. This can help reduce braking distances. The BAS complements the anti-lock brake system (ABS). Applying the brakes very quickly results in the best BAS assistance. To receive the benefit of the system, you must apply continuous braking pressure during the stopping sequence, (do not "pump" the brakes). Do not reduce brake pedal pressure unless braking is no longer desired. Once the brake pedal is released, the BAS is deactivated.

WARNING!

The Brake Assist System (BAS) cannot prevent the natural laws of physics from acting on the vehicle, nor can it increase the traction afforded by prevailing road conditions. BAS cannot prevent collisions, including those resulting from excessive speed in turns, driving on very slippery surfaces, or hydroplaning. The capabilities of a BAS-equipped vehicle must never be exploited in a reckless or dangerous manner, which could jeopardize the user's safety or the safety of others.

Brake System Warning Light

The red "Brake System Warning Light" will turn on when the ignition is turned to the ON/RUN mode and may stay on for as long as four seconds.

If the "Brake System Warning Light" remains on or comes on while driving, it indicates that the brake system is not functioning properly and that immediate service is required. If the "Brake System Warning Light" does not come on when the ignition is turned to the ON/RUN mode, have the light repaired as soon as possible.

Dynamic Steering Torque (DST)

Dynamic Steering Torque is a feature of the ESC and Electric Power Steering (EPS) modules that provides torque at the steering wheel for certain driving conditions in which the ESC module is detecting vehicle instability. The torque that the steering wheel receives is only meant to help the driver realize optimal steering behavior in order to reach/maintain vehicle stability. The only notification the driver receives that the feature is active is the torque applied to the steering wheel.

NOTE: The DST feature is only meant to help the driver realize the correct course of action through small torques on the steering wheel, which means the effectiveness of the DST feature is highly dependent on the driver's sensitivity and overall reaction to the applied torque. It is very important to realize that this feature will not steer the vehicle, meaning the driver is still responsible for steering the vehicle.

Electronic Brake Force Distribution (EBD)

This function manages the distribution of the braking torque between the front and rear axles by limiting braking pressure to the rear axle. This is done to prevent overslip of the rear wheels to avoid vehicle instability, and to prevent the rear axle from entering ABS before the front axle.

Electronic Roll Mitigation (ERM)

This system anticipates the potential for wheel lift by monitoring the driver's steering wheel input and the speed of the vehicle. When ERM determines that the rate of change of the steering wheel angle and vehicle's speed are sufficient to potentially cause wheel lift, it then applies the appropriate brake and may also reduce engine power to lessen the chance that wheel lift will occur. ERM can only reduce the chance of wheel lift occurring during severe or evasive driving maneuvers; it cannot prevent wheel lift due to other factors, such as road conditions, leaving the roadway, or striking objects or other vehicles.

WARNING!

Many factors, such as vehicle loading, road conditions and driving conditions, influence the chance that wheel lift or rollover may occur. ERM cannot prevent all wheel lift or roll overs, especially those that involve leaving the roadway or striking objects or other vehicles. The capabilities of an ERM-equipped vehicle must never be exploited in a reckless or dangerous manner which could jeopardize the user's safety or the safety of others.

Electronic Stability Control (ESC)

This system enhances directional control and stability of the vehicle under various driving conditions. ESC corrects for oversteering or understeering of the vehicle by applying the brake of the appropriate wheel(s) to assist in counteracting the oversteer or understeer condition. Engine power may also be reduced to help the vehicle maintain the desired path.

ESC uses sensors in the vehicle to determine the vehicle path intended by the driver and compares it to the actual path of the vehicle. When the actual path does not match the intended path, ESC applies the brake of the appropriate wheel to assist in counteracting the oversteer or understeer condition.

- Oversteer — when the vehicle is turning more than appropriate for the steering wheel position.
- Understeer — when the vehicle is turning less than appropriate for the steering wheel position.

The "ESC Activation/Malfunction Indicator Light" located in the instrument cluster will start to flash as soon as the ESC system becomes active. The "ESC Activation/Malfunction Indicator Light" also flashes when the TCS is active. If the "ESC Activation/Malfunction Indicator Light" begins to flash during acceleration, ease up on the accelerator and apply as little throttle as possible. Be sure to adapt your speed and driving to the prevailing road conditions.

WARNING!

- **Electronic Stability Control (ESC) cannot prevent the natural laws of physics from acting on the vehicle, nor can it increase the traction afforded by prevailing road conditions. ESC cannot prevent accidents, including those resulting from excessive speed in turns, driving on very slippery surfaces, or hydroplaning. ESC also cannot prevent accidents resulting from loss of vehicle control due to inappropriate driver input for the conditions. Only a safe, attentive, and skillful driver can prevent accidents. The capabilities of an ESC equipped vehicle must never be exploited in a reckless or dangerous manner which could jeopardize the user's safety or the safety of others.**
- **Vehicle modifications, or failure to properly maintain your vehicle, may change the handling characteristics of your vehicle, and may negatively affect**

(Continued)

WARNING! *(Continued)*

the performance of the ESC system. Changes to the steering system, suspension, braking system, tire type and size or wheel size may adversely affect ESC performance. Improperly inflated and unevenly worn tires may also degrade ESC performance. Any vehicle modification or poor vehicle maintenance that reduces the effectiveness of the ESC system can increase the risk of loss of vehicle control, vehicle rollover, personal injury and death.

ESC Operating Modes

NOTE: Depending upon model and mode of operation, the ESC system may have multiple operating modes.

ESC On

This is the normal operating mode for the ESC. Whenever the vehicle is started, the ESC system will be in this mode. This mode should be used for most driving conditions. Alternate ESC modes should only be used for specific reasons as noted in the following paragraphs.

Partial Off

The "Partial Off" mode is intended for times when a more spirited driving experience is desired. This mode may modify TCS and ESC thresholds for activation, which allows for more wheel spin than normally allowed. This mode may be useful if the vehicle becomes stuck.

To enter the "Partial Off" mode, momentarily push the "ESC Off" button and the "ESC Off Indicator Light" will illuminate. To turn the ESC on again, momentarily push the "ESC Off" button and the "ESC Off Indicator Light" will turn off.

NOTE: When driving with snow chains, or when starting off in deep snow, sand, or gravel, it may be desirable to allow more wheel spin. This can be accomplished by momentarily pushing the "ESC Off" button to enter partial mode "Partial Off" mode. Once the situation requiring "Partial Off" mode is overcome, turn ESC back on by momentarily pushing the "ESC Off" button. This may be done while the vehicle is in motion.

WARNING!

- **When in "Partial Off" mode, the TCS functionality of ESC, (except for the limited slip feature described in the TCS section), has been disabled and the "ESC Off Indicator Light" will be illuminated. When in "Partial Off" mode, the engine power reduction feature of TCS is disabled, and the enhanced vehicle stability offered by the ESC system is reduced.**
- **Trailer Sway control (TSC) is disabled when the ESC system is in the "Partial Off" mode.**

ESC Activation/Malfunction Indicator Light And ESC OFF Indicator Light

The "ESC Activation/Malfunction Indicator Light" in the instrument cluster will come on when the ignition is turned to the ON mode. It should go out with the engine running. If the "ESC Activation/Malfunction Indicator Light" comes on continuously with the engine running, a malfunction has been detected in the ESC system. If this light remains on after several ignition cycles, and the vehicle has been driven several miles (kilometers) at speeds greater than 30 mph (48 km/h), see an authorized dealer as soon as possible to have the problem diagnosed and corrected.

The "ESC Activation/Malfunction Indicator Light" (located in the instrument cluster) starts to flash as soon as the tires lose traction and the ESC system becomes active. The "ESC Activation/Malfunction Indicator Light" also flashes when TCS is active. If the "ESC Activation/Malfunction Indicator Light" begins to flash during acceleration, ease up on the accelerator and apply as little throttle as possible. Be sure to adapt your speed and driving to the prevailing road conditions.

NOTE:

- The "ESC Activation/Malfunction Indicator Light" and the "ESC OFF Indicator Light" come on momentarily each time the ignition is turned ON.
- Each time the ignition is turned ON, the ESC system will be on even if it was turned off previously.

- The ESC system will make buzzing or clicking sounds when it is active. This is normal; the sounds will stop when ESC becomes inactive following the maneuver that caused the ESC activation.

The "ESC OFF Indicator Light" indicates the customer has elected to have the Electronic Stability Control (ESC) in a reduced mode.

Hill Start Assist (HSA)

The HSA system is designed to mitigate roll back from a complete stop while on an incline. If the driver releases the brake while stopped on an incline, HSA will continue to hold the brake pressure for a short period. If the driver does not apply the throttle before this time expires, the system will release brake pressure and the vehicle will roll down the hill as normal.

The following conditions must be met in order for HSA to activate:

- The feature must be enabled.
- The vehicle must be stopped.
- Park brake must be off.
- Driver door must be closed.
- The vehicle must be on a sufficient grade.
- The gear selection must match vehicle uphill direction (i.e., vehicle facing uphill is in forward gear; vehicle backing uphill is in REVERSE gear).
- HSA will work in REVERSE gear and all forward gears. The system will not activate if the transmission is in PARK or NEUTRAL. For vehicles equipped with a manual transmission, if the clutch is pressed, HSA will remain active.

WARNING!

There may be situations where the Hill Start Assist (HSA) will not activate and slight rolling may occur, such as on minor hills or with a loaded vehicle, or while pulling a trailer. HSA is not a substitute for active driving involvement. It is always the driver's responsibility to be attentive to distance to other vehicles, people, and objects, and most importantly brake operation to ensure safe operation of the vehicle under all road conditions. Your complete attention is always required while driving to maintain safe control of your vehicle. Failure to follow these warnings can result in a collision or serious personal injury.

Towing With HSA

HSA will also provide assistance to mitigate roll back while towing a trailer.

WARNING!

- **If you use a trailer brake controller with your trailer, the trailer brakes may be activated and deactivated with the brake switch. If so, there may not be enough brake pressure to hold both the vehicle and the trailer on a hill when the brake pedal is released. In order to avoid rolling down an incline while resuming acceleration, manually activate the trailer brake or apply more vehicle brake pressure prior to releasing the brake pedal.**
- **HSA is not a parking brake. Always apply the parking brake fully when exiting your vehicle. Also, be certain to place the transmission in PARK.**
- **Failure to follow these warnings can result in a collision or serious personal injury.**

Disabling And Enabling HSA

This feature can be turned on or turned off. To change the current setting, proceed as follows:

- If disabling HSA using Uconnect Settings, refer to “Uconnect Settings” in “Multimedia” for further information.

Rain Brake Support (RBS)

Rain Brake Support may improve braking performance in wet conditions. It will periodically apply a small amount of brake pressure to remove any water buildup on the front brake rotors. It functions when the windshield wipers are in LO or HI speed. When Rain Brake Support is active, there is no notification to the driver and no driver interaction is required.

Ready Alert Braking (RAB)

Ready Alert Braking may reduce the time required to reach full braking during emergency braking situations. It anticipates when an emergency braking situation may occur by monitoring how fast the throttle is released by the driver. The EBC will prepare the brake system for a panic stop.

Trailer Sway Control (TSC)

TSC uses sensors in the vehicle to recognize an excessively swaying trailer and will take the appropriate actions to attempt to stop the sway. TSC will become active automatically once an excessively swaying trailer is recognized. Note that TSC cannot stop all trailers from swaying. Always use caution when towing a trailer and follow the trailer tongue weight recommendations. Refer to "Trailer Towing" in "Starting And Operating" for further information. When TSC is functioning, the "ESC Activation/ Malfunction Indicator Light" will flash, the engine power may be reduced and you may feel the brakes being applied to individual wheels to attempt to stop the trailer from swaying. TSC is disabled when the ESC system is in the "Partial Off" mode.

WARNING!

If TSC activates while driving, slow the vehicle down, stop at the nearest safe location, and adjust the trailer load to eliminate trailer sway.

AUXILIARY DRIVING SYSTEMS

Blind Spot Monitoring (BSM) — If Equipped

The Blind Spot Monitoring (BSM) system uses two radar-based sensors, located inside the rear bumper fascia, to detect highway licensable vehicles (automobiles, trucks, motorcycles, etc.) that enter the blind spot zones from the rear/front/side of the vehicle.

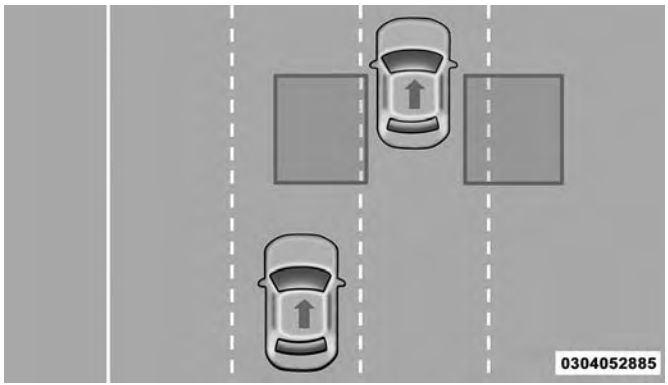

Rear Detection Zones

When the vehicle is started, the BSM warning light will momentarily illuminate in both outside rear view mirrors to let the driver know that the system is operational. The

BSM system sensors operate when the vehicle is in any forward gear or REVERSE and enters stand-by mode when the vehicle is in PARK.

The BSM detection zone covers approximately one lane width on both sides of the vehicle 12 ft (3.8 m). The zone length starts at the outside rear view mirror and extends approximately 10 ft (3 m) beyond the rear bumper of the vehicle. The BSM system monitors the detection zones on both sides of the vehicle when the vehicle speed reaches approximately 6 mph (10 km/h) or higher and will alert the driver of vehicles in these areas.

NOTE:

- The BSM system DOES NOT alert the driver about rapidly approaching vehicles that are outside the detection zones.
- The BSM system detection zone DOES NOT change if your vehicle is towing a trailer. Therefore, visually verify the adjacent lane is clear for both your vehicle and trailer before making a lane change. If the trailer or other object (i.e., bicycle, sports equipment) extends beyond the side of your vehicle, this may result in false detections. The BSM warning light may even remain illuminated the entire time the vehicle is in a forward gear.
- The Blind Spot Monitoring (BSM) system may experience drop outs (blinking on and off) of the side mirror Warning Indicator lamps when a motorcycle or any small object remains at the side of the vehicle for extended periods of time (more than a couple of seconds).

The area on the rear fascia where the radar sensors are located must remain free of snow, ice, and dirt/road contamination so that the BSM system can function properly. Do not block the area of the rear fascia where the radar sensors are located with foreign objects (bumper stickers, bicycle racks, etc.).

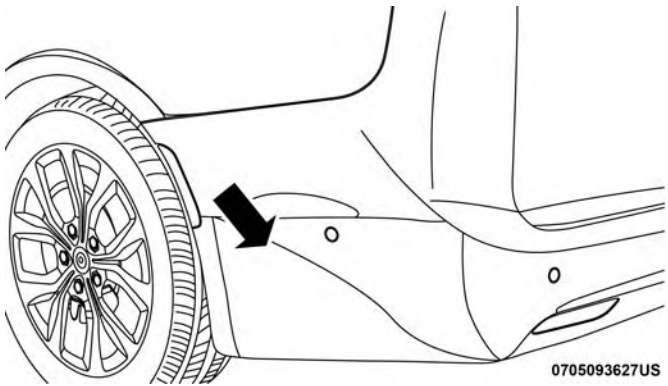

Sensor Location

If the system detects degraded performance due to contamination or foreign objects, a message will warn you of a blocked sensor and the warning indicators in side view mirrors will be on. The warning indicators will remain illuminated until blockage clearing conditions are met. First clear the fascia area around the sensors of the blockage. After removing the blockage, the following procedure can be used to reset the system:

- Cycle the ignition from on to off and then back on.

If the blockage message is still present after cycling the ignition and driving in traffic, check again for a blockage.

The BSM system notifies the driver of objects in the detection zones by illuminating the BSM warning light located in the outside mirrors in addition to sounding an audible (chime) alert and reducing the radio volume. Refer to “Modes Of Operation” in this section for further information.

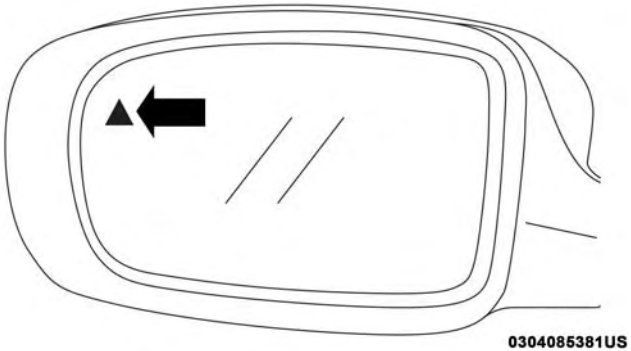

Warning Light Location

The BSM system monitors the detection zone from three different entry points (side, rear, front) while driving to see if an alert is necessary. The BSM system will issue an alert during these types of zone entries.

Entering From The Side

Vehicles that move into your adjacent lanes from either side of the vehicle.

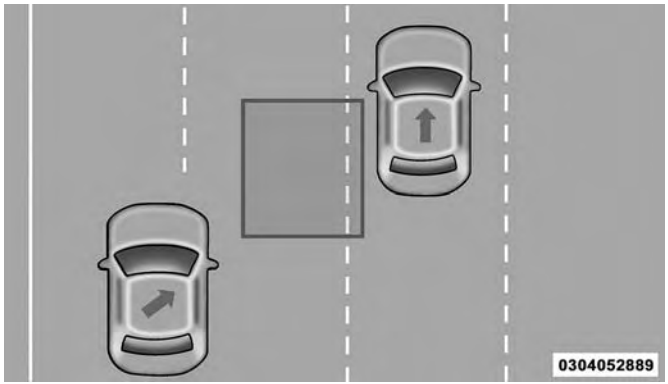

Side Monitoring

Entering From The Rear

Vehicles that come up from behind your vehicle on either side and enter the rear detection zone with a relative speed of less than 30 mph (48 km/h).

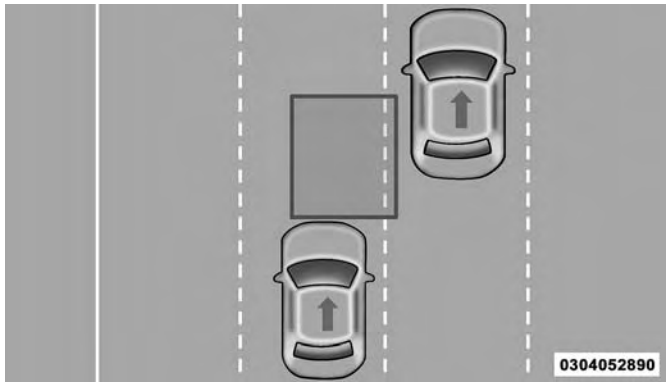

Rear Monitoring

Overtaking Traffic

If you pass another vehicle slowly with a relative speed less than 15 mph (24 km/h) and the vehicle remains in the blind spot for approximately 1.5 seconds, the warning light will be illuminated. If the difference in speed between the two vehicles is greater than 15 mph (24 km/h), the warning light will not illuminate.

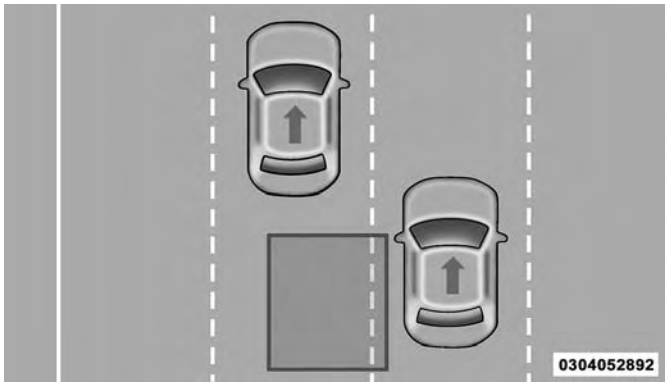

Overtaking/Approaching

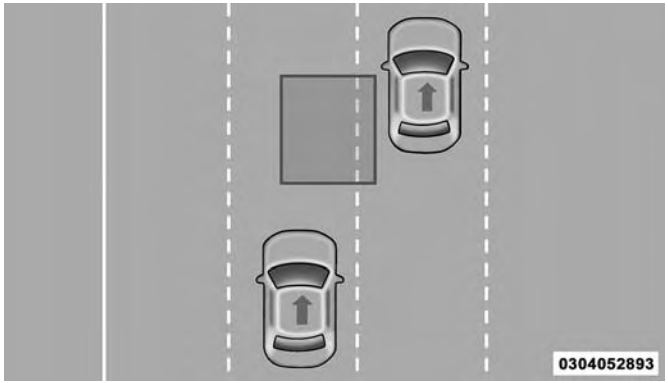

Overtaking/Passing

The BSM system is designed not to issue an alert on stationary objects such as guardrails, posts, walls, foliage, berms, snow banks, car washes etc. However, occasionally the system may alert on such objects. This is normal operation and your vehicle does not require service.

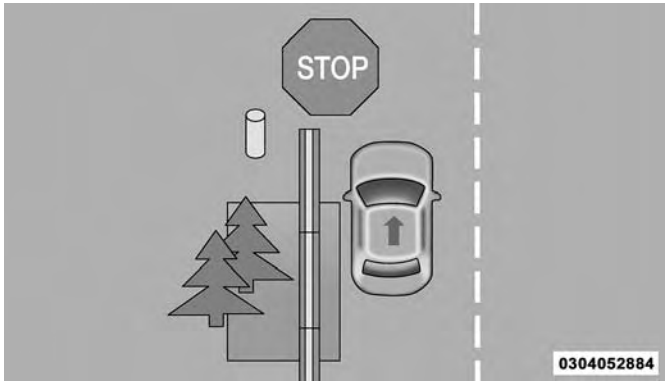

Stationary Objects

The BSM system will not alert you of objects that are traveling in the opposite direction of the vehicle in adjacent lanes.

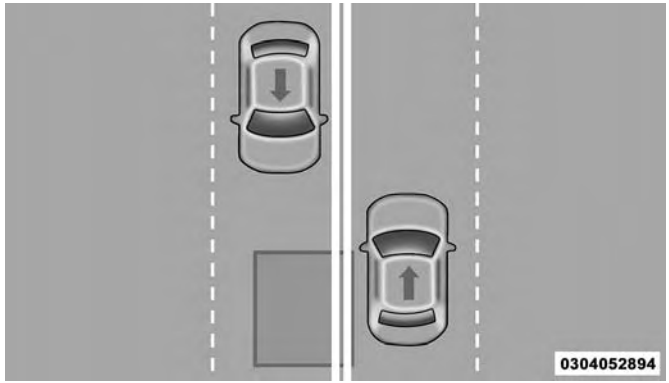

Opposing Traffic

WARNING!

The Blind Spot Monitoring system is only an aid to help detect objects in the blind spot zones. The BSM system is not designed to detect pedestrians, bicyclists, or animals. Even if your vehicle is equipped with the BSM system, always check your vehicle's mirrors, glance over your shoulder, and use your turn signal before changing lanes. Failure to do so can result in serious injury or death.

Rear Cross Path (RCP)

The Rear Cross Path (RCP) feature is intended to aid the driver when backing out of parking spaces where their vision of oncoming vehicles may be blocked. Proceed slowly and cautiously out of the parking space until the rear end of the vehicle is exposed. The RCP system will then have a clear view of the cross traffic and if an oncoming vehicle is detected, alert the driver.

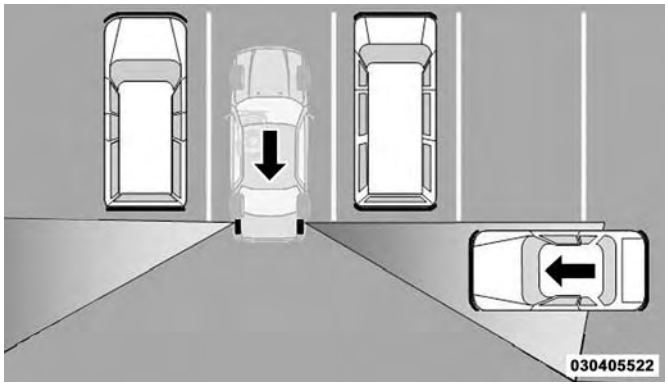

RCP Detection Zones

RCP monitors the rear detection zones on both sides of the vehicle, for objects that are moving toward the side of the vehicle with a minimum speed of approximately 3 mph (5 km/h), to objects moving a maximum of approximately 20 mph (32 km/h), such as in parking lot situations.

NOTE: In a parking lot situation, oncoming vehicles can be obscured by vehicles parked on either side. If the sensors are blocked by other structures or vehicles, the system will not be able to alert the driver. Additionally, if the host vehicle is obscured by a flat object on one side the system can false alert on vehicles approaching from the opposite direction.

When RCP is on and the vehicle is in REVERSE, the driver is alerted using both the visual and audible alarms, including reducing the radio volume.

WARNING!

Rear Cross Path Detection (RCP) is not a back up aid system. It is intended to be used to help a driver detect an oncoming vehicle in a parking lot situation. Drivers must be careful when backing up, even when using RCP. Always check carefully behind your vehicle, look behind you, and be sure to check for pedestrians, animals, other vehicles, obstructions, and blind spots before backing up. Failure to do so can result in serious injury or death.

Modes Of Operation

Three selectable modes of operation are available in the Uconnect System. Refer to "Uconnect Settings" in "Multimedia" for further information.

Blind Spot Alert Lights Only — Default Setting

When operating in Blind Spot Alert mode, the BSM system will provide a visual alert in the appropriate side view mirror based on a detected object. However, when the system is operating in Rear Cross Path (RCP) mode, the system will respond with both visual and audible alerts when a detected object is present. Whenever an audible alert is requested, the radio is muted.

Blind Spot Alert Lights/Chime

When operating in Blind Spot Alert Lights/Chime mode, the BSM system will provide a visual alert in the appropriate side view mirror based on a detected object. If the turn signal is then activated, and it corresponds to an alert present on that side of the vehicle, an audible chime will also be sounded. Whenever a turn signal and detected object are present on the same side at the same time, both the visual and audible alerts will be issued. In addition to the audible alert the radio (if on) will also be muted.

NOTE: Whenever an audible alert is requested by the BSM system, the radio is also muted.

When the system is in RCP, the system shall respond with both visual and audible alerts when a detected object is present. Whenever an audible alert is requested, the radio is also muted. Turn/hazard signal status is ignored; the RCP state always requests the chime.

Blind Spot Alert Off

When the BSM system is turned off there will be no visual or audible alerts from either the BSM or RCP systems.

NOTE:

- The BSM system will store the current operating mode when the vehicle is shut off. Each time the vehicle is started the previously stored mode will be recalled and used.
- The BSM system can work in conjunction with the Keysense function of the vehicle if equipped. Refer to "KeySense Cluster Messages" in "Getting To Know Your Instrument Panel" for further information.

General Information

The following regulatory statement applies to all Radio Frequency (RF) devices equipped in this vehicle:

This device complies with Part 15 of the FCC Rules and with Industry Canada license-exempt RSS standard(s). Operation is subject to the following two conditions:

1. This device may not cause harmful interference.
2. This device must accept any interference received, including interference that may cause undesired operation.

NOTE: Changes or modifications not expressly approved by the party responsible for compliance could void the user's authority to operate the equipment.

Forward Collision Warning (FCW) With Mitigation — If Equipped

The Forward Collision Warning (FCW) system with mitigation provides the driver with audible warnings, visual warnings (within the instrument cluster display), and may apply a brake jerk to warn the driver when it detects a potential frontal collision. The warnings and limited braking are intended to provide the driver with enough time to react, avoid or mitigate the potential collision.

NOTE: FCW monitors the information from the forward looking sensors as well as the Electronic Brake Controller (EBC), to calculate the probability of a forward collision. When the system determines that a forward collision is probable, the driver will be provided with audible and visual warnings and may provide a brake jerk warning.

If the driver does not take action based upon these progressive warnings, then the system will provide a limited level of active braking to help slow the vehicle and mitigate the potential forward collision. If the driver reacts to the warnings by braking and the system determines that the driver intends to avoid the collision by braking but has not applied sufficient brake force, the system will compensate and provide additional brake force as required.

If a FCW with Mitigation event begins at a speed below 26 mph (42 km/h), the system may provide the maximum braking possible to mitigate the potential forward collision. If the Forward Collision Warning with Mitigation event stops the vehicle completely, the system will hold the vehicle at standstill for two seconds and then release the brakes.

FCW Message

When the system determines a collision with the vehicle in front of you is no longer probable, the warning message will be deactivated.

NOTE:

- The minimum speed for FCW activation is 1 mph (2 km/h).
- The FCW alerts may be triggered on objects other than vehicles such as guard rails or sign posts based on the course prediction. This is expected and is a part of normal FCW activation and functionality.
- It is unsafe to test the FCW system. To prevent such misuse of the system, after four Active Braking events within a key cycle, the Active Braking portion of FCW will be deactivated until the next key cycle.
- The FCW system is intended for on-road use only. If the vehicle is taken off-road, the FCW system should be deactivated to prevent unnecessary warnings to the surroundings.

WARNING!

Forward Collision Warning (FCW) is not intended to avoid a collision on its own, nor can FCW detect every type of potential collision. The driver has the responsibility to avoid a collision by controlling the vehicle via braking and steering. Failure to follow this warning could lead to serious injury or death.

Turning FCW On Or Off

The forward collision menu setting is located in the Uconnect settings.

NOTE: The default status of FCW is “on,” this allows the system to warn you of a possible collision with the vehicle in front of you.

Changing the FCW status to “off” deactivates the system, so no warning or active braking will be available in case of a possible collision

NOTE:

- The FCW system state is kept in memory from one key cycle to the next. If the system is turned off, it will remain off when the vehicle is restarted.
- FCW can work in conjunction with the KeySense function of the vehicle if equipped. Refer to “KeySense Cluster Messages” in “Getting To Know Your Instrument Panel” for further information.

FCW Braking Status And Sensitivity

The FCW Sensitivity and Active Braking status are programmable through the Uconnect System. Refer to “Uconnect Settings” in “Multimedia” for further information.

The default sensitivity of FCW is the “Medium” setting and the system status is “Warning & Braking”. This allows the system to warn the driver of a possible collision with the vehicle in front using audible/visual warnings and it applies autonomous braking.

Changing the FCW status to “Far” setting allows the system to warn the driver of a possible collision with the vehicle in front using audible/visual warning when the latter is at a farther distance than ″Medium″ setting. This provides the most reaction time to avoid a possible collision.

Changing the FCW status to the “Near” setting, allows the system to warn the driver of a possible collision with the vehicle in front when the distance between the vehicle in the front is much closer. This setting provides less reaction time than the “Far” and “Medium” settings, which allows for a more dynamic driving experience.

NOTE:

- Changing the FCW status to “Only Warning” prevents the system from providing limited active braking, or additional brake support if the driver is not braking adequately in the event of a potential frontal collision, but maintains the audible and visual warnings.
- Changing the FCW status to “Off” prevents the system from providing autonomous braking, or additional brake support if the driver is not braking adequately in the event of a potential frontal collision.
- The system will retain the last setting selected by the driver after ignition shut down.
- FCW may not react to irrelevant objects such as overhead objects, ground reflections, objects not in the path

of the vehicle, stationary objects that are far away, oncoming traffic, or leading vehicles with the same or higher rate of speed.

- FCW will be disabled like ACC, with the unavailable screens.

FCW Limited Warning

If the instrument cluster displays "ACC/FCW Limited Functionality" or "ACC/FCW Limited Functionality Clean Front Windshield" momentarily, there may be a condition that limits FCW functionality. Although the vehicle is still drivable under normal conditions, the active braking may not be fully available. Once the condition that limited the system performance is no longer present, the system will return to its full performance state. If the problem persists, see your authorized dealer.

Service FCW Warning

If the system turns off, and the instrument cluster displays:

- ACC/FCW Unavailable Service Required
- Cruise/FCW Unavailable Service Required

This indicates there is an internal system fault. Although the vehicle is still drivable under normal conditions, have the system checked by an authorized dealer.

General Information

The following regulatory statement applies to all Radio Frequency (RF) devices equipped in this vehicle:

This device complies with Part 15 of the FCC Rules and with Industry Canada license-exempt RSS standard(s). Operation is subject to the following two conditions:

1. This device may not cause harmful interference.
2. This device must accept any interference received, including interference that may cause undesired operation.

NOTE: Changes or modifications not expressly approved by the party responsible for compliance could void the user's authority to operate the equipment.

Tire Pressure Monitor System (TPMS)

The Tire Pressure Monitor System (TPMS) will warn the driver of a low tire pressure based on the vehicle recommended cold placard pressure.

NOTE: The TPMS Warning Light will illuminate in the instrument cluster and a chime will sound when tire pressure is low in one or more of the four active road tires. In addition, the instrument cluster will display a graphic showing the pressure values of each tire with the low tire pressure values in a different color, or the Uconnect radio will display a TPMS message, when this occurs you must increase the tire pressure to the recommended cold placard pressure in order for the TPMS Warning Light to turn off.

The tire pressure will vary with temperature by approximately 1 psi (7 kPa) for every 12°F (6.5°C). This means that when the outside temperature decreases, the tire pressure will decrease. Tire pressure should always be set based on cold inflation tire pressure. This is defined as the tire pressure after the vehicle has not been driven for at least three hours, or driven less than 1 mile (1.6 km) after a three hour period. The cold tire inflation pressure must not exceed the maximum inflation pressure molded into the tire sidewall. Refer to "Tires" in "Servicing and Maintenance" for information on how to properly inflate the vehicle's tires. The tire pressure will also increase as the vehicle is driven. This is normal and there should be no adjustment for this increased pressure.

The TPMS will warn the driver of a low tire pressure if the tire pressure falls below the low-pressure warning limit for any reason, including low temperature effects and natural pressure loss through the tire.

The TPMS will continue to warn the driver of low tire pressure as long as the condition exists, and will not turn off until the tire pressure is at or above the recommended cold placard pressure. Once the low tire pressure warning (TPMS Warning Light) illuminates, you must increase the tire pressure to the recommended cold placard pressure in order for the TPMS Warning Light to turn off.

The system will automatically update and the TPMS Warning Light will turn off once the system receives the updated tire pressures. The vehicle may need to be driven for up to 20 minutes above 15 mph (24 km/h) in order for the TPMS to receive this information.

For example, your vehicle may have a recommended cold (parked for more than three hours) placard pressure of 33 psi (227 kPa). If the ambient temperature is 68°F (20°C) and the measured tire pressure is 28 psi (193 kPa), a temperature

drop to 20°F (-7°C) will decrease the tire pressure to approximately 24 psi (165 kPa). This tire pressure is low enough to turn ON the "TPMS Warning Light." Driving the vehicle may cause the tire pressure to rise to approximately 28 psi (193 kPa), but the TPMS Warning Light will still be on. In this situation, the TPMS Warning Light will turn off only after the tires are inflated to the vehicle's recommended cold placard pressure value.

NOTE: When filling warm tires, the tire pressure may need to be increased up to an additional 4 psi (28 kPa) above the recommended cold placard pressure in order to turn the TPMS Warning Light off.

CAUTION!

- **The TPMS has been optimized for the original equipment tires and wheels. TPMS pressures and warning have been established for the tire size equipped on your vehicle. Undesirable system operation or sensor damage may result when using replacement equipment that is not of the same size, type, and/or style. The TPM sensor is not designed for use on aftermarket wheels and may contribute to a poor overall system performance or sensor damage.**

(Continued)

CAUTION! *(Continued)*

Customers are encouraged to use OEM wheels to assure proper TPM feature operation.

- **Using aftermarket tire sealants may cause the Tire Pressure Monitoring System (TPMS) sensor to become inoperable. After using an aftermarket tire sealant it is recommended that you take your vehicle to your authorized dealer to have your sensor function checked.**
- **After inspecting or adjusting the tire pressure always reinstall the valve stem cap. This will prevent moisture and dirt from entering the valve stem, which could damage the TPMS sensor.**

NOTE:

- The TPMS is not intended to replace normal tire care and maintenance, or to provide warning of a tire failure or condition.
- The TPMS should not be used as a tire pressure gauge while adjusting your tire pressure.
- Driving on a significantly underinflated tire causes the tire to overheat and can lead to tire failure. Underinflation also reduces fuel efficiency and tire tread life, and may affect the vehicle's handling and stopping ability.

- The TPMS is not a substitute for proper tire maintenance, and it is the driver's responsibility to maintain correct tire pressure using an accurate tire pressure gauge, even if underinflation has not reached the level to trigger illumination of the TPMS Warning Light.
- Seasonal temperature changes will affect tire pressure, and the TPMS will monitor the actual tire pressure in the tire.

Premium System

The Tire Pressure Monitor System (TPMS) uses wireless technology with wheel rim mounted electronic sensors to monitor tire pressure levels. Sensors, mounted to each wheel as part of the valve stem, transmit tire pressure readings to the receiver module.

NOTE: It is particularly important for you to check the tire pressure in all of the tires on your vehicle monthly and to maintain the proper pressure.

The TPMS consists of the following components:

- Receiver module
- Four tire pressure monitoring sensors
- Various tire pressure monitoring system messages, which display in the instrument cluster
- Tire Pressure Monitoring System Warning Light

Tire Pressure Monitoring Low Pressure Warnings

The TPMS Warning Light will illuminate in the instrument cluster and a chime will sound when tire pressure is low in one or more of the four active road tires. In addition, the instrument cluster will display an "Inflate to XX" message and a graphic showing the pressure values of each tire with the low tire pressure values in a different color.

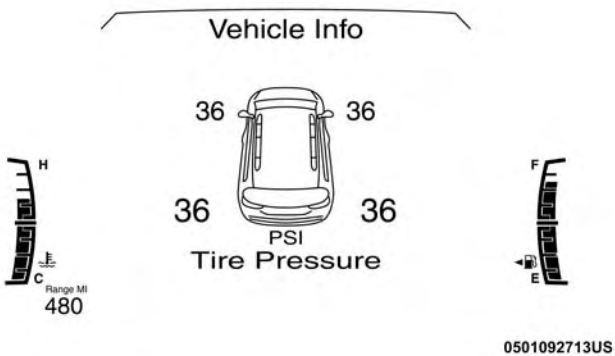

Tire Pressure Monitoring System

Should this occur, you should stop as soon as possible and inflate the tires with low pressure (those in a different color

in the instrument cluster graphic) to the vehicle's recommended cold placard pressure value as shown in the "Inflate to XX" message. Once the system receives the updated tire pressures, the system will automatically update, the pressure values in the graphic display in the instrument cluster will return to their original color, and the TPMS Warning Light will turn off. The vehicle may need to be driven for up to 20 minutes above 15 mph (24 km/h) in order for the TPMS to receive this information.

Service TPMS Warning

When a system fault is detected, the Tire Pressure Monitoring System (TPMS) Warning Light will flash on and off for 75 seconds and then remain on solid. The system fault will also sound a chime. In addition, the instrument cluster will display a "SERVICE TPM SYSTEM" message for a minimum of five seconds and then display dashes (- -) in place of the pressure value to indicate which sensor is not being received.

If the ignition is cycled, this sequence will repeat, providing the system fault still exists. If the system fault no longer exists, the TPMS Warning Light will no longer flash, and the "SERVICE TPM SYSTEM" message will no longer display, and a pressure value will display in place of the dashes. A system fault can occur due to any of the following:

- Jamming due to electronic devices or driving next to facilities emitting the same radio frequencies as the TPMS sensors.
- Installing some form of aftermarket window tinting that affects radio wave signals.
- Lots of snow or ice around the wheels or wheel housings.
- Using tire chains on the vehicle.
- Using wheels/tires not equipped with TPMS sensors.

Vehicles With Compact Spare — If Equipped

1. The compact spare tire does not have a tire pressure monitoring sensor. Therefore, the TPMS will not monitor the pressure in the compact spare tire.
2. If you install the compact spare tire in place of a road tire that has a pressure below the low-pressure warning limit, upon the next ignition cycle, the TPMS Warning Light will remain on and a chime will sound. In addition, the graphic in the instrument cluster will still display a different color pressure value.

3. After driving the vehicle for up to 20 minutes above 15 mph (24 km/h), the TPMS Warning Light will flash on and off for 75 seconds and then remain on solid. In addition, the instrument cluster will display a "SERVICE TPM SYSTEM" message for five seconds and then display dashes (- -) in place of the pressure value.

4. For each subsequent ignition cycle, a chime will sound, the TPMS Warning Light will flash on and off for 75 seconds and then remain on solid, and the instrument cluster will display a "SERVICE TPM SYSTEM" message for five seconds and then display dashes (- -) in place of the pressure value.

5. Once you repair or replace the original road tire and reinstall it on the vehicle in place of the compact spare, the TPMS will update automatically. In addition, the TPMS Warning Light will turn off and the graphic in the instrument cluster will display a new pressure value instead of dashes (- -), as long as no tire pressure is below the low-pressure warning limit in any of the four active road tires. The vehicle may need to be driven for up to 20 minutes above 15 mph (24 km/h) in order for the TPMS to receive this information.

TPMS Deactivation — If Equipped

The Tire Pressure Monitoring System (TPMS) can be deactivated if replacing all four wheel and tire assemblies (road tires) with wheel and tire assemblies that do not have TPMS Sensors, such as when installing winter wheel and tire assemblies on your vehicle.

To deactivate the TPMS, first, replace all four wheel and tire assemblies (road tires) with tires not equipped with Tire Pressure Monitoring (TPM) Sensors. Then, drive the vehicle for 20 minutes above 15 mph (24 km/h). The TPMS will chime, the TPMS Warning Light will flash on and off for 75 seconds and then remain on. The instrument cluster will display the "SERVICE TPM SYSTEM" message and then display dashes (--) in place of the pressure values.

Beginning with the next ignition cycle, the TPMS will no longer chime or display the "SERVICE TPM SYSTEM" message in the instrument cluster but dashes (--) will remain in place of the pressure values.

To reactivate the TPMS, replace all four wheel and tire assemblies (road tires) with tires equipped with TPM sensors. Then, drive the vehicle for up to 20 minutes above 15 mph (24 km/h). The TPMS will chime, the TPMS Warning Light will flash on and off for 75 seconds and then turn off. The instrument cluster will display the "SERVICE

TPM SYSTEM" message and then display pressure values in place of the dashes. On the next ignition cycle the "SERVICE TPM SYSTEM" message will no longer be displayed as long as no system fault exists.

General Information

The following regulatory statement applies to all radio frequency (RF) devices equipped in this vehicle:

This device complies with Part 15 of the FCC Rules and with Industry Canada license-exempt RSS standard(s). Operation is subject to the following two conditions:

(1) This device may not cause harmful interference, and

(2) This device must accept any interference received, including interference that may cause undesired operation.

NOTE: Changes or modifications not expressly approved by the party responsible for compliance could void the user's authority to operate the equipment.

OCCUPANT RESTRAINT SYSTEMS

Some of the most important safety features in your vehicle are the restraint systems:

Occupant Restraint Systems Features

- Seat Belt Systems
- Supplemental Restraint Systems (SRS) Air Bags
- Child Restraints

Some of the safety features described in this section may be standard equipment on some models, or may be optional equipment on others. If you are not sure, ask an authorized dealer.

Important Safety Precautions

Please pay close attention to the information in this section. It tells you how to use your restraint system properly, to keep you and your passengers as safe as possible.

Here are some simple steps you can take to minimize the risk of harm from a deploying air bag:

1. Children 12 years old and under should always ride buckled up in the rear seat of a vehicle with a rear seat.
2. A child who is not big enough to wear the vehicle seat belt properly (Refer to "Child Restraints" in this section

for further information) must be secured in the appropriate child restraint or belt-positioning booster seat in a rear seating position.

3. If a child from 2 to 12 years old (not in a rear-facing child restraint) must ride in the front passenger seat, move the seat as far back as possible and use the proper child restraint (Refer to "Child Restraints" in this section for further information).
4. Never allow children to slide the shoulder belt behind them or under their arm.
5. You should read the instructions provided with your child restraint to make sure that you are using it properly.
6. All occupants should always wear their lap and shoulder belts properly.
7. The driver and front passenger seats should be moved back as far as practical to allow the front air bags room to inflate.
8. Do not lean against the door or window. If your vehicle has side air bags, and deployment occurs, the side air bags will inflate forcefully into the space between occupants and the door and occupants could be injured.
9. If the air bag system in this vehicle needs to be modified to accommodate a disabled person, refer to the "Customer Assistance" section for customer service contact information.

WARNING!

- **Never place a rear-facing child restraint in front of an air bag. A deploying passenger front air bag can cause death or serious injury to a child 12 years or younger, including a child in a rear-facing child restraint.**
- **Never install a rear-facing child restraint in the front seat of a vehicle. Only use a rear-facing child restraint in the rear seat. If the vehicle does not have a rear seat, do not transport a rear-facing child restraint in that vehicle.**

Seat Belt Systems

Buckle up even though you are an excellent driver, even on short trips. Someone on the road may be a poor driver and could cause a collision that includes you. This can happen far away from home or on your own street.

Research has shown that seat belts save lives, and they can reduce the seriousness of injuries in a collision. Some of the

worst injuries happen when people are thrown from the vehicle. Seat belts reduce the possibility of ejection and the risk of injury caused by striking the inside of the vehicle. Everyone in a motor vehicle should be belted at all times.

Enhanced Seat Belt Use Reminder System (BeltAlert)

Driver and Passenger BeltAlert (if equipped)

BeltAlert is a feature intended to remind the driver and outboard front seat passenger (if equipped with outboard front passenger seat BeltAlert) to buckle their seat belts. The Belt Alert feature is active whenever the ignition switch is in the START or ON/RUN position.

Initial Indication

If the driver is unbuckled when the ignition switch is first in the START or ON/RUN position, a chime will signal for a few seconds. If the driver or outboard front seat passenger (if equipped with outboard front passenger seat BeltAlert) is unbuckled when the ignition switch is first in the START or ON/RUN position the Seat Belt Reminder Light will turn on and remain on until both outboard front seat belts are buckled. The outboard front passenger seat BeltAlert is not active when an outboard front passenger seat is unoccupied.

BeltAlert Warning Sequence

The BeltAlert warning sequence is activated when the vehicle is moving above a specified vehicle speed range and the driver or outboard front seat passenger is unbuckled (if equipped with outboard front passenger seat BeltAlert) (the outboard front passenger seat BeltAlert is not active when the outboard front passenger seat is unoccupied). The BeltAlert warning sequence starts by blinking the Seat Belt Reminder Light and sounding an intermittent chime. Once the BeltAlert warning sequence has completed, the Seat Belt Reminder Light will remain on until the seat belts are buckled. The BeltAlert warning sequence may repeat based on vehicle speed until the driver and occupied outboard front seat passenger seat belts are buckled. The driver should instruct all occupants to buckle their seat belts.

Change of Status

If the driver or outboard front seat passenger (if equipped with outboard front passenger seat BeltAlert) unbuckles their seat belt while the vehicle is traveling, the BeltAlert warning sequence will begin until the seat belts are buckled again.

The outboard front passenger seat BeltAlert is not active when the outboard front passenger seat is unoccupied.

BeltAlert may be triggered when an animal or other items are placed on the outboard front passenger seat or when the seat is folded flat (if equipped). It is recommended that pets be restrained in the rear seat (if equipped) in pet harnesses or pet carriers that are secured by seat belts, and cargo is properly stowed.

BeltAlert can be activated or deactivated by an authorized dealer. FCA US LLC does not recommend deactivating BeltAlert.

NOTE: If BeltAlert has been deactivated and the driver or outboard front seat passenger (if equipped with outboard front passenger seat BeltAlert) is unbuckled the Seat Belt Reminder Light will turn on and remain on until the driver and outboard front seat passenger seat belts are buckled.

Lap/Shoulder Belts

All seating positions in your vehicle are equipped with lap/shoulder belts.

The seat belt webbing retractor will lock only during very sudden stops or collisions. This feature allows the shoulder part of the seat belt to move freely with you under normal conditions. However, in a collision the seat belt will lock and reduce your risk of striking the inside of the vehicle or being thrown out of the vehicle.

WARNING!

- **Relying on the air bags alone could lead to more severe injuries in a collision. The air bags work with your seat belt to restrain you properly. In some collisions, the air bags won't deploy at all. Always wear your seat belt even though you have air bags.**
- **In a collision, you and your passengers can suffer much greater injuries if you are not properly buckled up. You can strike the interior of your vehicle or other passengers, or you can be thrown out of the vehicle. Always be sure you and others in your vehicle are buckled up properly.**
- **It is dangerous to ride in a cargo area, inside or outside of a vehicle. In a collision, people riding in these areas are more likely to be seriously injured or killed.**
- **Do not allow people to ride in any area of your vehicle that is not equipped with seats and seat belts.**
- **Be sure everyone in your vehicle is in a seat and using a seat belt properly. Occupants, including the**

(Continued)

WARNING! *(Continued)*

driver, should always wear their seat belts whether or not an air bag is also provided at their seating position to minimize the risk of severe injury or death in the event of a crash.

- Wearing your seat belt incorrectly could make your injuries in a collision much worse. You might suffer internal injuries, or you could even slide out of the seat belt. Follow these instructions to wear your seat belt safely and to keep your passengers safe, too.
- Two people should never be belted into a single seat belt. People belted together can crash into one another in a collision, hurting one another badly. Never use a lap/shoulder belt or a lap belt for more than one person, no matter what their size.

WARNING!

- A lap belt worn too high can increase the risk of injury in a collision. The seat belt forces won't be at the strong hip and pelvic bones, but across your abdomen. Always wear the lap part of your seat belt as low as possible and keep it snug.

(Continued)

WARNING! *(Continued)*

- A twisted seat belt may not protect you properly. In a collision, it could even cut into you. Be sure the seat belt is flat against your body, without twists. If you can't straighten a seat belt in your vehicle, take it to an authorized dealer immediately and have it fixed.
- A seat belt that is buckled into the wrong buckle will not protect you properly. The lap portion could ride too high on your body, possibly causing internal injuries. Always buckle your seat belt into the buckle nearest you.
- A seat belt that is too loose will not protect you properly. In a sudden stop, you could move too far forward, increasing the possibility of injury. Wear your seat belt snugly.
- A seat belt that is worn under your arm is dangerous. Your body could strike the inside surfaces of the vehicle in a collision, increasing head and neck injury. A seat belt worn under the arm can cause internal injuries. Ribs aren't as strong as shoulder bones. Wear the seat belt over your shoulder so that your strongest bones will take the force in a collision.

(Continued)

WARNING! ***(Continued)***

- **A shoulder belt placed behind you will not protect you from injury during a collision. You are more likely to hit your head in a collision if you do not wear your shoulder belt. The lap and shoulder belt are meant to be used together.**
- **A frayed or torn seat belt could rip apart in a collision and leave you with no protection. Inspect the seat belt system periodically, checking for cuts, frays, or loose parts. Damaged parts must be replaced immediately. Do not disassemble or modify the seat belt system. Seat belt assemblies must be replaced after a collision.**

Lap/Shoulder Belt Operating Instructions

1. Enter the vehicle and close the door. Sit back and adjust the seat.
2. The seat belt latch plate is above the back of the front seat, and next to your arm in the rear seat (for vehicles equipped with a rear seat). Grasp the latch plate and pull out the seat belt. Slide the latch plate up the webbing as far as necessary to allow the seat belt to go around your lap.

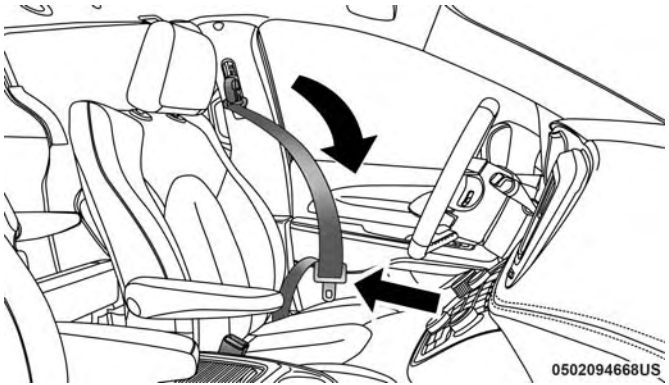

Pulling Out The Latch Plate

3. When the seat belt is long enough to fit, insert the latch plate into the buckle until you hear a “click.”

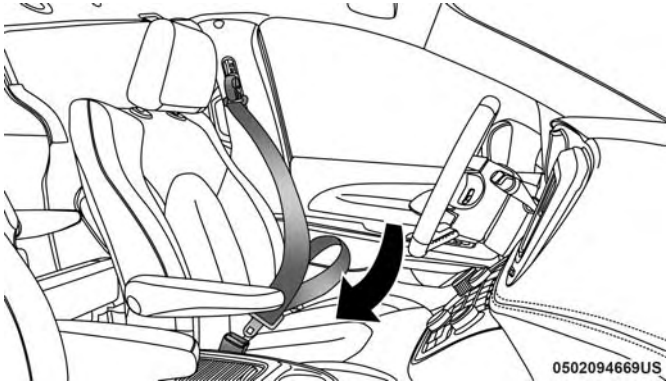

Inserting Latch Plate Into Buckle

4. Position the lap belt so that it is snug and lies low across your hips, below your abdomen. To remove slack in the lap belt portion, pull up on the shoulder belt. To loosen the lap belt if it is too tight, tilt the latch plate and pull on the lap belt. A snug seat belt reduces the risk of sliding under the seat belt in a collision.

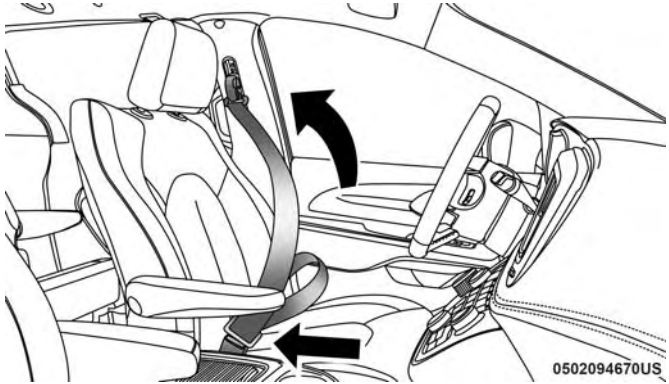

Positioning The Lap Belt

5. Position the shoulder belt across the shoulder and chest with minimal, if any slack so that it is comfortable and not resting on your neck. The retractor will withdraw any slack in the shoulder belt.

6. To release the seat belt, push the red button on the buckle. The seat belt will automatically retract to its stowed position. If necessary, slide the latch plate down the webbing to allow the seat belt to retract fully.

Lap/Shoulder Belt Untwisting Procedure

Use the following procedure to untwist a twisted lap/shoulder belt.

1. Position the latch plate as close as possible to the anchor point.
2. At about 6 to 12 inches (15 to 30 cm) above the latch plate, grasp and twist the seat belt webbing 180 degrees to create a fold that begins immediately above the latch plate.
3. Slide the latch plate upward over the folded webbing. The folded webbing must enter the slot at the top of the latch plate.
4. Continue to slide the latch plate up until it clears the folded webbing and the seat belt is no longer twisted.

Adjustable Upper Shoulder Belt Anchorage

In the front and second row outboard seats the shoulder belt can be adjusted upward or downward to position the seat belt away from your neck. Push or squeeze the anchorage button to release the anchorage, and move it up or down to the position that serves you best.

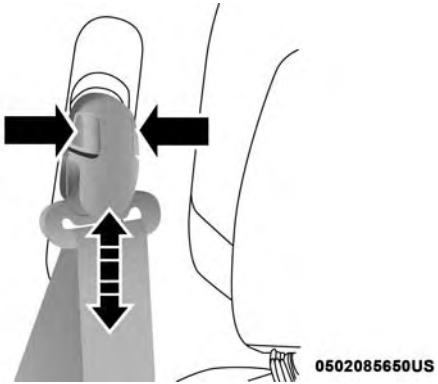

Adjustable Anchorage

As a guide, if you are shorter than average, you will prefer the shoulder belt anchorage in a lower position, and if you are taller than average, you will prefer the shoulder belt anchorage in a higher position. After you release the anchorage button, try to move it up or down to make sure that it is locked in position.

NOTE: The adjustable upper shoulder belt anchorage is equipped with an Easy Up feature. This feature allows the shoulder belt anchorage to be adjusted in the upward position without pushing or squeezing the release button. To verify the

shoulder belt anchorage is latched, pull downward on the shoulder belt anchorage until it is locked into position.

WARNING!

- **Wearing your seat belt incorrectly could make your injuries in a collision much worse. You might suffer internal injuries, or you could even slide out of the seat belt. Follow these instructions to wear your seat belt safely and to keep your passengers safe, too.**
- **Position the shoulder belt across the shoulder and chest with minimal, if any slack so that it is comfortable and not resting on your neck. The retractor will withdraw any slack in the shoulder belt.**
- **Misadjustment of the seat belt could reduce the effectiveness of the safety belt in a crash.**
- **Always make all seat belt height adjustments when the vehicle is stationary.**

Second Row Center (If Equipped) And Third Row Center Seat Belt Operating Instructions

The second row center (if equipped) and third row center seat belts feature a seat belt with a mini-latch plate and buckle, which allows the seat belt to detach from the lower anchor when the seat is folded. The mini-latch plate and regular latch plate can then be stored out of the way in the headliner for added convenience to open up utilization of the storage areas behind the front seats when the seat is not occupied.

1. Remove the mini-latch plate and regular latch plate from its stowed position in the headliner slightly behind the second or third row seat.

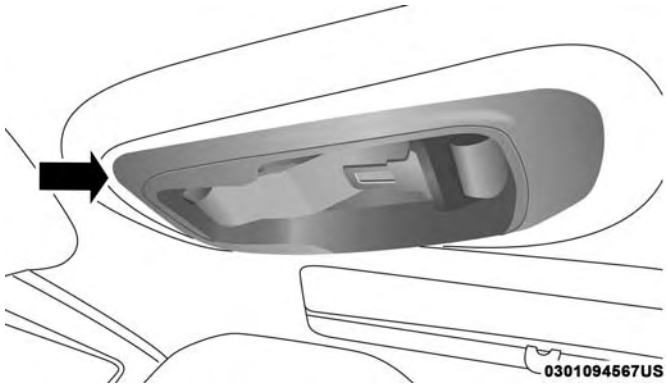

Mini-Latch Stowage

2. Grasp the mini-latch plate and pull the seat belt over the seat.

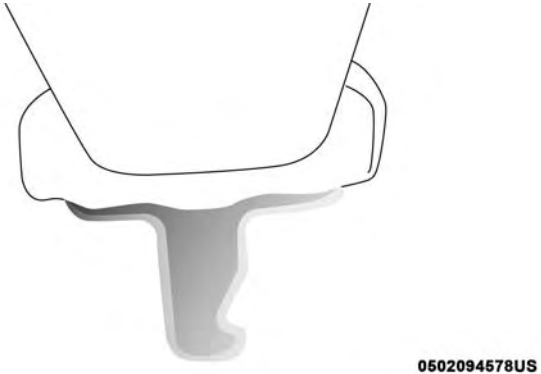

Mini-Latch Plate

3. Route the shoulder belt to the inside of the left head restraint.

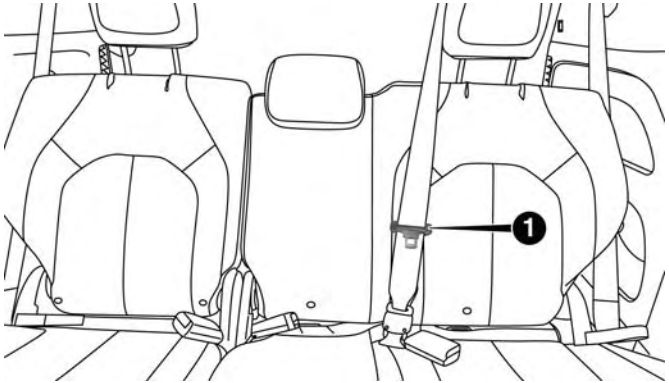

Routing The Rear Seat Belt Latch Plate

1 — Seat Belt Latch Plate

4. When the seat belt is long enough to fit, insert the mini-latch plate into the mini-buckle until you hear a "click."

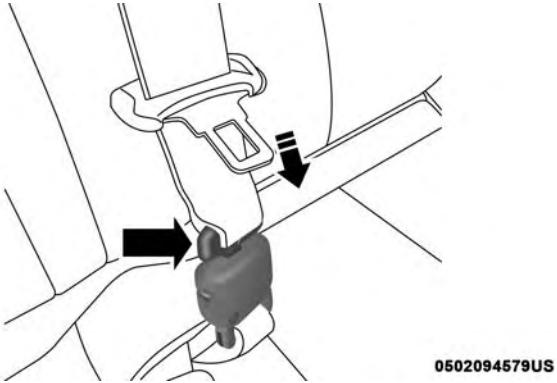

Connect Mini-Latch To Mini-Buckle

5. Sit back in seat. Slide the regular latch plate up the webbing as far as necessary to allow the seat belt to go around your lap.

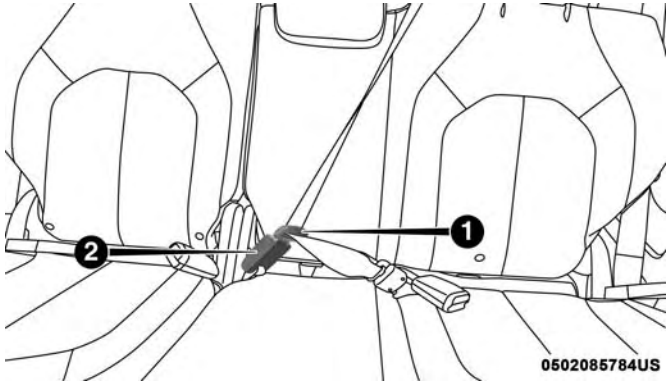

Rear Center Seat Belt Buckled

1 — Seat Belt Latch Plate
2 — Seat Belt Buckle

6. When the seat belt is long enough to fit, insert the latch plate into the buckle until you hear a "click."

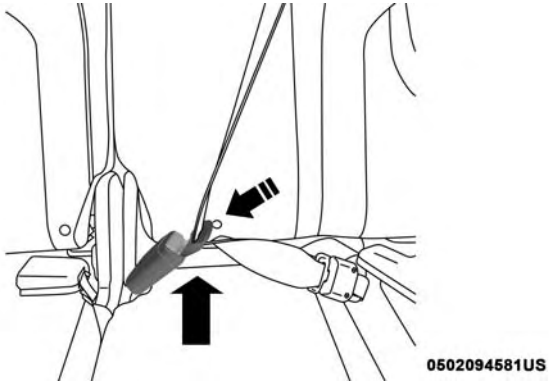

Latch Plate And Buckle Connected

7. Position the lap belt so that it is snug and lies low across your hips, below your abdomen. To remove slack in the lap belt portion, pull up on the shoulder belt. To loosen the lap belt if it is too tight, pull on the lap belt. A snug seat belt reduces the risk of sliding under the seat belt in a collision.

8. Position the shoulder belt on your chest so that it is comfortable and not resting on your neck. The retractor will withdraw any slack in the seat belt.

9. To release the seat belt, push the red button on the buckle.

10. To disengage the mini-latch plate from the mini-buckle for storage, insert the regular latch plate into the center red slot on the mini-buckle. The seat belt will automatically retract to its stowed position. If necessary, slide the latch plate down the webbing to allow the seat belt to retract fully. Insert the mini-latch plate and regular latch plate into its stowed position.

WARNING!

- **If the mini-latch plate and mini-buckle are not properly connected when the seat belt is used by an occupant, the seat belt will not be able to provide proper restraint and will increase the risk of injury in a collision.**
- **When reattaching the mini-latch plate and mini-buckle, ensure the seat belt webbing is not twisted. If the webbing is twisted, follow the preceding procedure to detach the mini-latch plate and mini-buckle, untwist the webbing, and reattach the mini-latch plate and mini-buckle.**

Seat Belt Extender

If a seat belt is not long enough to fit properly, even when the webbing is fully extended and the adjustable upper shoulder belt anchorage (if equipped) is in its lowest position, an authorized dealer can provide you with a Seat Belt Extender. The Seat Belt Extender should be used only if the existing seat belt is not long enough. When the Seat Belt Extender is not required for a different occupant, it must be removed.

WARNING!

- **ONLY use a Seat Belt Extender if it is physically required in order to properly fit the original seat belt system. DO NOT USE the Seat Belt Extender if, when worn, the distance between the front edge of the Seat Belt Extender buckle and the center of the occupant's body is LESS than 6 inches.**
- **Using a Seat Belt Extender when not needed can increase the risk of serious injury or death in a collision. Only use the Seat Belt Extender when the lap belt is not long enough and only use in the recommended seating positions. Remove and store the Seat Belt Extender when not needed.**

Seat Belts And Pregnant Women

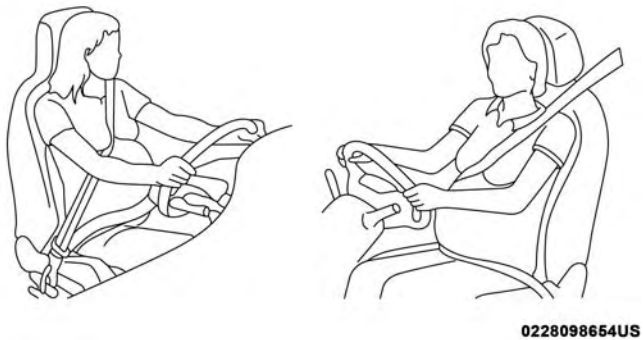

Pregnant Women And Seat Belts

Seat belts must be worn by all occupants including pregnant women: the risk of injury in the event of an accident is reduced for the mother and the unborn child if they are wearing a seat belt.

Position the lap belt snug and low below the abdomen and across the strong bones of the hips. Place the shoulder belt across the chest and away from the neck. Never place the shoulder belt behind the back or under the arm.

Seat Belt Pretensioner

The front outboard seat belt system is equipped with pretensioning devices that are designed to remove slack from the seat belt in the event of a collision. These devices may improve the performance of the seat belt by removing slack from the seat belt early in a collision. Pretensioners work for all size occupants, including those in child restraints.

NOTE: These devices are not a substitute for proper seat belt placement by the occupant. The seat belt still must be worn snugly and positioned properly.

The pretensioners are triggered by the Occupant Restraint Controller (ORC). Like the air bags, the pretensioners are single use items. A deployed pretensioner or a deployed air bag must be replaced immediately.

Energy Management Feature

The front outboard seat belt system is equipped with an Energy Management feature that may help further reduce the risk of injury in the event of a collision. The seat belt system has a retractor assembly that is designed to release webbing in a controlled manner.

Switchable Automatic Locking Retractors (ALR)

The seat belts in the passenger seating positions are equipped with a Switchable Automatic Locking Retractor (ALR) which is used to secure a child restraint system. For additional information, refer to "Installing Child Restraints Using The Vehicle Seat Belt" under the "Child Restraints" section of this manual. The figure below illustrates the locking feature for each seating position.

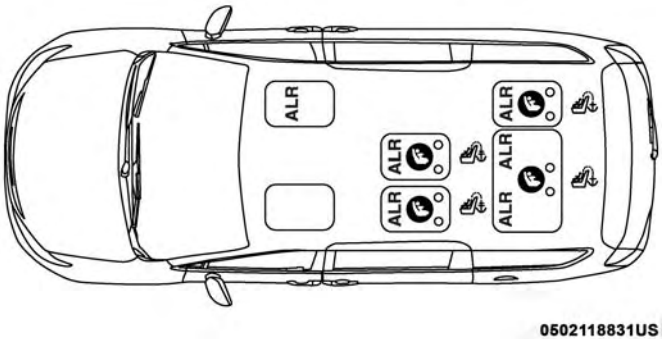

7 Passenger Bench Seat Automatic Locking Retractor (ALR) Locations

ALR — Switchable Automatic Locking Retractor

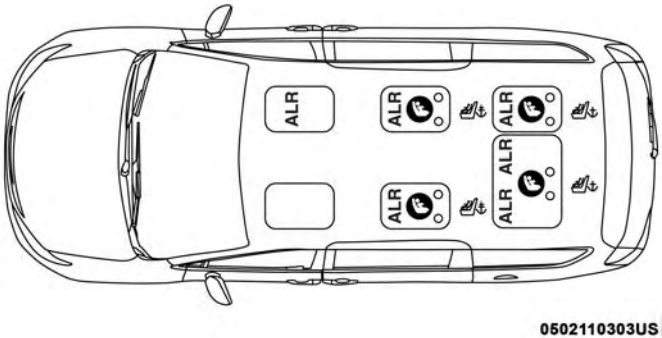

7 Passenger Stow 'n Go Seating Automatic Locking Retractor (ALR) Locations

ALR — Switchable Automatic Locking Retractor

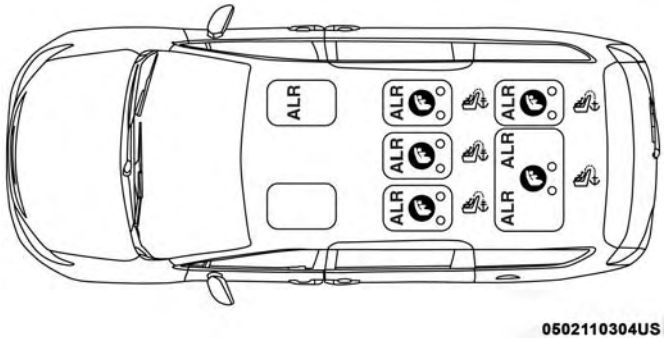

8 Passenger Automatic Locking Retractor (ALR) Locations

ALR — Switchable Automatic Locking Retractor

If the passenger seating position is equipped with an ALR and is being used for normal usage, only pull the seat belt webbing out far enough to comfortably wrap around the occupant's mid-section so as to not activate the ALR. If the ALR is activated, you will hear a clicking sound as the seat belt retracts. Allow the webbing to retract completely in this case and then carefully pull out only the amount of webbing necessary to comfortably wrap around the occupant's mid-section. Slide the latch plate into the buckle until you hear a "click."

In Automatic Locking Mode, the shoulder belt is automatically pre-locked. The seat belt will still retract to remove any slack in the shoulder belt. Use the Automatic Locking Mode anytime a child restraint is installed in a seating position that has a seat belt with this feature. Children 12 years old and under should always be properly restrained in the rear seat of a vehicle with a rear seat.

WARNING!

- **Never place a rear-facing child restraint in front of an air bag. A deploying passenger front air bag can cause death or serious injury to a child 12 years or younger, including a child in a rear-facing child restraint.**
- **Never install a rear-facing child restraint in the front seat of a vehicle. Only use a rear-facing child restraint in the rear seat. If the vehicle does not have a rear seat, do not transport a rear-facing child restraint in that vehicle.**

How To Engage The Automatic Locking Mode

1. Buckle the combination lap and shoulder belt.
2. Grasp the shoulder portion and pull downward until the entire seat belt is extracted.
3. Allow the seat belt to retract. As the seat belt retracts, you will hear a clicking sound. This indicates the seat belt is now in the Automatic Locking Mode.

How To Disengage The Automatic Locking Mode

Unbuckle the combination lap/shoulder belt and allow it to retract completely to disengage the Automatic Locking Mode and activate the vehicle sensitive (emergency) locking mode.

WARNING!

- **The seat belt assembly must be replaced if the switchable Automatic Locking Retractor (ALR) feature or any other seat belt function is not working properly when checked according to the procedures in the Service Manual.**
- **Failure to replace the seat belt assembly could increase the risk of injury in collisions.**
- **Do not use the Automatic Locking Mode to restrain occupants who are wearing the seat belt or children who are using booster seats. The locked mode is only used to install rear-facing or forward-facing child restraints that have a harness for restraining the child.**

Seat Belt Park Stitch — If Equipped

The rear outboard seat belts may be equipped with a park stitch to raise the latch plate for easier access to occupants. If the park stitch interferes with the tight installation of a child restraint, slide the latch plate over the stitching to shorten the lap portion of the belt and install the car seat normally. When the car seat is removed from the vehicle, slide the latch plate above the park stitch to enable occupants to latch the seatbelt securely.

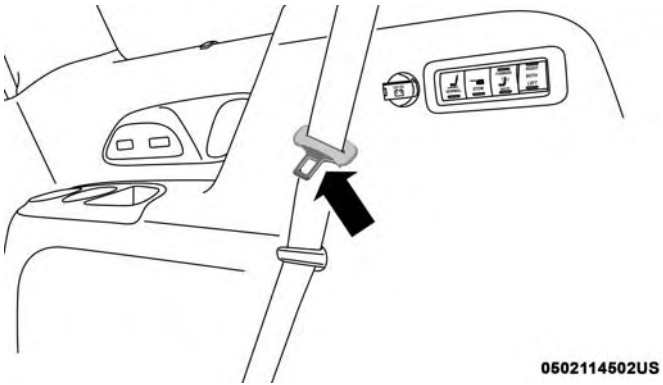

Seat Belt Park Stitch Location

Third Row Stow Clip - If Equipped

Your vehicle may be equipped with a stow clip on the lower trim behind the third row. This clip is used to hold the seat belt out of the path of the power folding third row seat. Only place the seat belt webbing in this clip while folding and opening the seat. Do not leave the webbing behind the clip when using the belt to restrain an occupant.

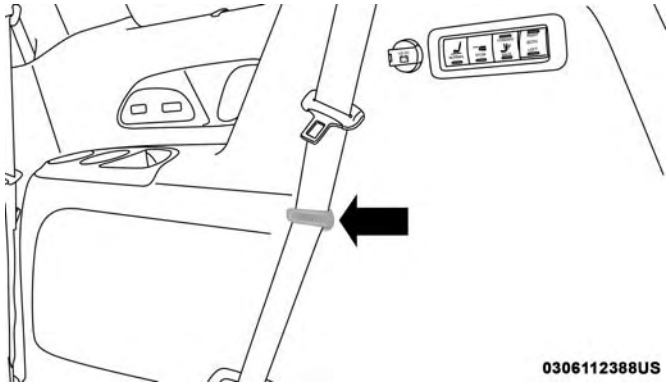

Third Row Stow Clip

WARNING!

Do not place the seat belt webbing behind the third row stow clip when using the seat belt to restrain an occupant. The seat belt will not be positioned properly on the occupant and they could be more seriously injured in an accident as a result.

Supplemental Restraint Systems (SRS)

Some of the safety features described in this section may be standard equipment on some models, or may be optional equipment on others. If you are not sure, ask an authorized dealer.

The air bag system must be ready to protect you in a collision. The Occupant Restraint Controller (ORC) monitors the internal circuits and interconnecting wiring associated with the electrical Air Bag System Components. Your vehicle may be equipped with the following Air Bag System Components:

Air Bag System Components

- Occupant Restraint Controller (ORC)
- Air Bag Warning Light
- Steering Wheel and Column
- Instrument Panel
- Knee Impact Bolsters
- Driver and Front Passenger Air Bags
- Seat Belt Buckle Switch
- Supplemental Side Air Bags
- Supplemental Knee Air Bags
- Front and Side Impact Sensors
- Seat Belt Pretensioners
- Seat Track Position Sensors
- Occupant Classification System

Air Bag Warning Light

The ORC monitors the readiness of the electronic parts of the air bag system whenever the ignition switch is in the START or ON/RUN position. If the ignition switch is in the OFF position or in the ACC position, the air bag system is not on and the air bags will not inflate.

The ORC contains a backup power supply system that may deploy the air bag system even if the battery loses power or it becomes disconnected prior to deployment.

The ORC turns on the Air Bag Warning Light in the instrument panel for approximately four to eight seconds for a self-check when the ignition switch is first in the ON/RUN position. After the self-check, the Air Bag Warning Light will turn off. If the ORC detects a malfunction in any part of the system, it turns on the Air Bag Warning Light, either momentarily or continuously. A single chime will sound to alert you if the light comes on again after initial startup.

The ORC also includes diagnostics that will illuminate the instrument panel Air Bag Warning Light if a malfunction is detected that could affect the air bag system. The diagnostics also record the nature of the malfunction. While the air bag system is designed to be maintenance free, if any of the following occurs, have an authorized dealer service the air bag system immediately.

- The Air Bag Warning Light does not come on during the four to eight seconds when the ignition switch is first in the ON/RUN position.
- The Air Bag Warning Light remains on after the four to eight-second interval.
- The Air Bag Warning Light comes on intermittently or remains on while driving.

NOTE: If the speedometer, tachometer, or any engine related gauges are not working, the Occupant Restraint Controller (ORC) may also be disabled. In this condition the air bags may not be ready to inflate for your protection. Have an authorized dealer service the air bag system immediately.

WARNING!

Ignoring the Air Bag Warning Light in your instrument panel could mean you won't have the air bag system to protect you in a collision. If the light does not come on as a bulb check when the ignition is first turned on, stays on after you start the vehicle, or if it comes on as you drive, have an authorized dealer service the air bag system immediately.

Redundant Air Bag Warning Light

If a fault with the Air Bag Warning Light is detected, which could affect the Supplemental Restraint System (SRS), the Redundant Air Bag Warning Light will illuminate on the instrument panel. The Redundant Air Bag Warning Light will stay on until the fault is cleared. In addition, a single chime will sound to alert you that the Redundant Air Bag Warning

Light has come on and a fault has been detected. If the Redundant Air Bag Warning Light comes on intermittently or remains on while driving have an authorized dealer service the vehicle immediately.

For additional information regarding the Redundant Air Bag Warning Light refer to "Getting To Know Your Instrument Panel" section of this manual.

Front Air Bags

This vehicle has front air bags and lap/shoulder belts for both the driver and front passenger. The front air bags are a supplement to the seat belt restraint systems. The driver front air bag is mounted in the center of the steering wheel. The passenger front air bag is mounted in the instrument panel, above the glove compartment. The words "SRS AIRBAG" or "AIRBAG" are embossed on the air bag covers.

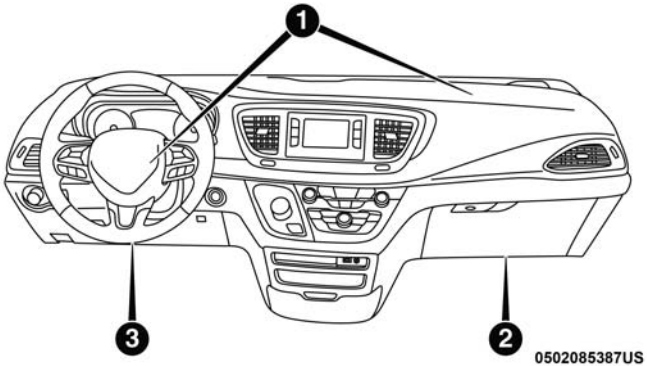

Front Air Bag/Knee Bolster Locations

1 — Driver And Passenger Front Air Bags
2 — Passenger Knee Impact Bolster/Supplemental Passenger Knee Air Bag
3 — Driver Knee Impact Bolster/Supplemental Driver Knee Air Bag

WARNING!

- **Being too close to the steering wheel or instrument panel during front air bag deployment could cause serious injury, including death. Air bags need room**

(Continued)

WARNING! *(Continued)*

to inflate. Sit back, comfortably extending your arms to reach the steering wheel or instrument panel.

- **Never place a rear-facing child restraint in front of an air bag. A deploying passenger front air bag can cause death or serious injury to a child 12 years or younger, including a child in a rear-facing child restraint.**
- **Never install a rear-facing child restraint in the front seat of a vehicle. Only use a rear-facing child restraint in the rear seat. If the vehicle does not have a rear seat, do not transport a rear-facing child restraint in that vehicle.**

Driver And Passenger Front Air Bag Features

The Advanced Front Air Bag system has multistage driver and front passenger air bags. This system provides output appropriate to the severity and type of collision as determined by the Occupant Restraint Controller (ORC), which may receive information from the front impact sensors (if equipped) or other system components.

The first stage inflator is triggered immediately during an impact that requires air bag deployment. A low energy output is used in less severe collisions. A higher energy output is used for more severe collisions.

This vehicle may be equipped with a driver and/or front passenger seat belt buckle switch that detects whether the driver or front passenger seat belt is buckled. The seat belt buckle switch may adjust the inflation rate of the Advanced Front Air Bags.

This vehicle may be equipped with driver and/or front passenger seat track position sensors that may adjust the inflation rate of the Advanced Front Air Bags based upon seat position.

This vehicle is equipped with a right front passenger Occupant Classification System ("OCS") that is designed to provide Passenger Advanced Front Air Bag output appropriate to the occupant's seated weight input, as determined by the OCS.

WARNING!

- **No objects should be placed over or near the air bag on the instrument panel or steering wheel because**

(Continued)

WARNING! ***(Continued)***

any such objects could cause harm if the vehicle is in a collision severe enough to cause the air bag to inflate.

- **Do not put anything on or around the air bag covers or attempt to open them manually. You may damage the air bags and you could be injured because the air bags may no longer be functional. The protective covers for the air bag cushions are designed to open only when the air bags are inflating.**
- **Relying on the air bags alone could lead to more severe injuries in a collision. The air bags work with your seat belt to restrain you properly. In some collisions, air bags won't deploy at all. Always wear your seat belts even though you have air bags.**

Front Air Bag Operation

Front Air Bags are designed to provide additional protection by supplementing the seat belts. Front air bags are not expected to reduce the risk of injury in rear, side, or rollover collisions. The front air bags will not deploy in all frontal collisions, including some that may produce substantial vehicle damage — for example, some pole collisions, truck underrides, and angle offset collisions.

On the other hand, depending on the type and location of impact, front air bags may deploy in crashes with little vehicle front-end damage but that produce a severe initial deceleration.

Because air bag sensors measure vehicle deceleration over time, vehicle speed and damage by themselves are not good indicators of whether or not an air bag should have deployed.

Seat belts are necessary for your protection in all collisions, and also are needed to help keep you in position, away from an inflating air bag.

When the ORC detects a collision requiring the front air bags, it signals the inflator units. A large quantity of non-toxic gas is generated to inflate the front air bags.

The steering wheel hub trim cover and the upper passenger side of the instrument panel separate and fold out of the way as the air bags inflate to their full size. The front air bags fully inflate in less time than it takes to blink your eyes. The front air bags then quickly deflate while helping to restrain the driver and front passenger.

Occupant Classification System (OCS) — Front Passenger Seat

The OCS is part of a Federally regulated safety system for this vehicle. It is designed to provide Passenger Advanced Front Air Bag output appropriate to the occupant's seated weight, as determined by the OCS.

The Occupant Classification System (OCS) consists of the following:

- Occupant Restraint Controller (ORC)
- Occupant Classification Module (OCM) and Sensor located in the front passenger seat
- Air Bag Warning Light

Occupant Classification Module (OCM) and Sensor

The Occupant Classification Module (OCM) is located underneath the front passenger seat. The Sensor is located beneath the passenger seat cushion foam. Any weight on the seat will be sensed by the Sensor. The OCM uses input from the Sensor to determine the front passenger's most probable classification. The OCM communicates this information to the ORC. The ORC may reduce the inflation rate of the Passenger Advanced Front Air Bag deployment based on occupant classification. In order for the OCS to operate as designed, it is important for the front passenger to be seated properly and properly wearing the seat belt.

The OCS will NOT prevent deployment of the Passenger Advanced Front Air Bag. The OCS may reduce the inflation rate of the Passenger Advanced Front Air Bag if the OCS estimates that:

- The front passenger seat is unoccupied or has very light objects on it; or
- The front passenger seat is occupied by a small passenger, including a child; or
- The front passenger seat is occupied by a rear-facing child restraint; or
- The front passenger is not properly seated or his or her weight is taken off of the seat for a period of time.

Front Passenger Seat Occupant Status	Front Passenger Air Bag Output
Rear-facing child restraint	Reduced-power deployment
Child, including a child in a forward-facing child restraint or booster seat*	Reduced-power deployment OR Full-power deployment

Front Passenger Seat Occupant Status	Front Passenger Air Bag Output
Properly seated adult	Full-power deployment OR reduced-power deployment
Unoccupied seat	Reduced-power deployment

* It is possible for a child to be classified as an adult, allowing a full-power Passenger Advanced Front Air Bag deployment. Never allow children to ride in the front passenger seat and never install a child restraint system, including a rear-facing child restraint, in the front passenger seat.

WARNING!

- **Never place a rear-facing child restraint in front of an air bag. A deploying passenger front air bag can cause death or serious injury to a child 12 years or younger, including a child in a rear-facing child restraint.**

(Continued)

WARNING! *(Continued)*

- **Never install a rear-facing child restraint in the front seat of a vehicle. Only use a rear-facing child restraint in the rear seat. If the vehicle does not have a rear seat, do not transport a rear-facing child restraint in that vehicle.**
- **Children 12 years or younger should always ride buckled up in the rear seat of a vehicle with a rear seat.**

The OCS determines the front passenger's most probable classification. The OCS estimates the seated weight on the front passenger seat and where that weight is located. The OCS communicates the classification status to the ORC. The ORC uses the classification to determine whether the Passenger Advanced Front Air Bag inflation rate should be adjusted.

In order for the OCS to operate as designed, it is important for the front passenger to be seated properly and properly wearing the seat belt. Properly seated passengers are:

- Sitting upright
- Facing forward

- Sitting in the center of the seat with their feet comfortably on or near the floor
- Sitting with their back against the seatback and the seatback in an upright position

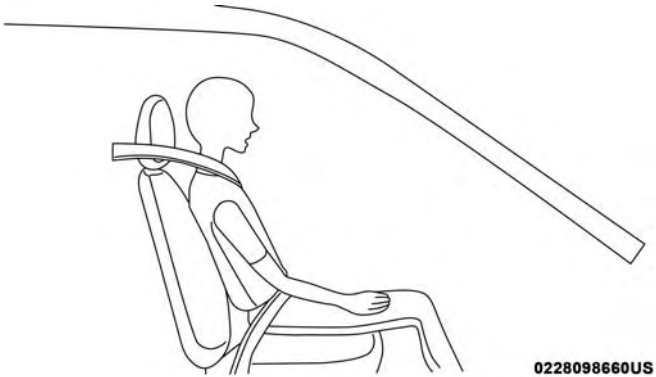

Seated Properly

Lighter Weight Passengers (Including Small Adults)

When a lighter weight passenger, including a small adult, occupies the front passenger seat, the OCS may reduce the inflation rate of the Passenger Advanced Front Air Bag. This does not mean that the OCS is working improperly.

Do not decrease OR increase the front passenger's seated weight on the front passenger seat

The front passenger's seated weight must be properly positioned on the front passenger seat. Failure to do so may result in serious injury or death. The OCS determines the most probable classification of the occupant that it detects. The OCS will detect the front passenger's decreased or increased seated weight, which may result in an adjusted inflation rate of the Passenger Advanced Front Air Bag in a collision. This does not mean that the OCS is working improperly. Decreasing the front passenger's seated weight on the front passenger seat may result in a reduced-power deployment of the Passenger Advanced Front Air Bag. Increasing the front passenger's seated weight on the front passenger seat may result in a full-power deployment of the Passenger Advanced Front Air Bag.

Examples of improper front passenger seating include:

- The front passenger's weight is transferred to another part of the vehicle (like the door, arm rest or instrument panel).
- The front passenger leans forward, sideways, or turns to face the rear of the vehicle.
- The front passenger's seatback is not in the full upright position.

- The front passenger carries or holds an object while seated (e.g., backpack, box, etc.).
- Objects are lodged under the front passenger seat.
- Objects are lodged between the front passenger seat and center console.
- Accessories that may change the seated weight on the front passenger seat are attached to the front passenger seat.
- Anything that may decrease or increase the front passenger's seated weight.

The OCS determines the front passenger's most probable classification. If an occupant in the front passenger seat is seated improperly, the occupant may provide an output signal to the OCS that is different from the occupant's properly seated weight input, for example:

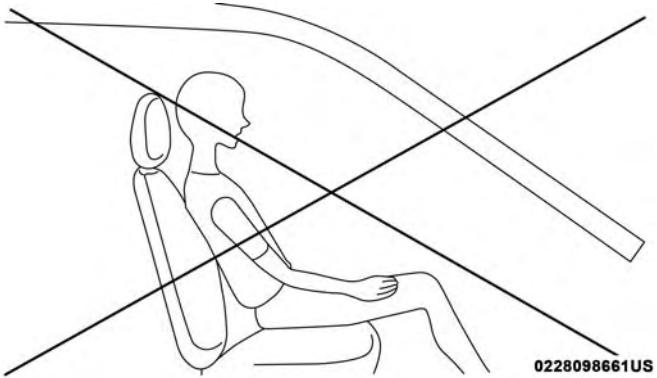

Not Seated Properly

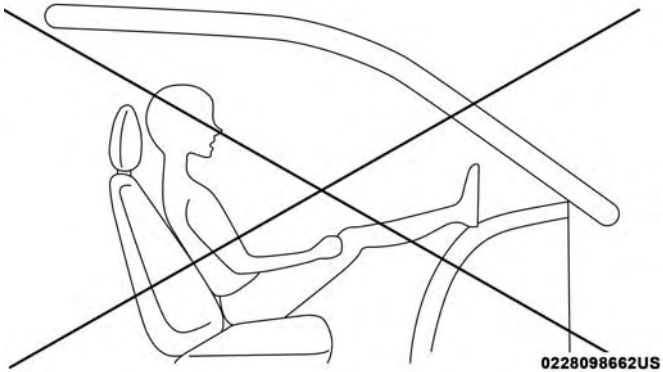

Not Seated Properly

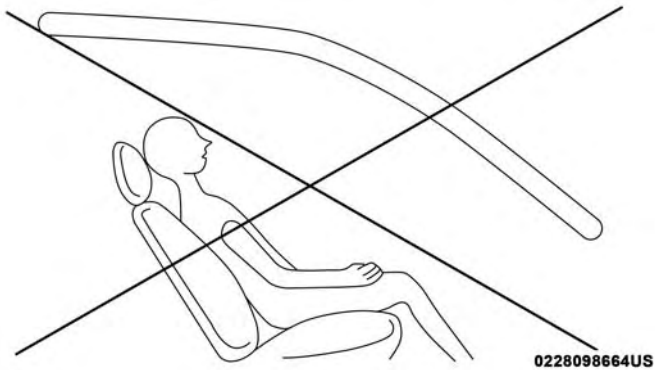

Not Seated Properly

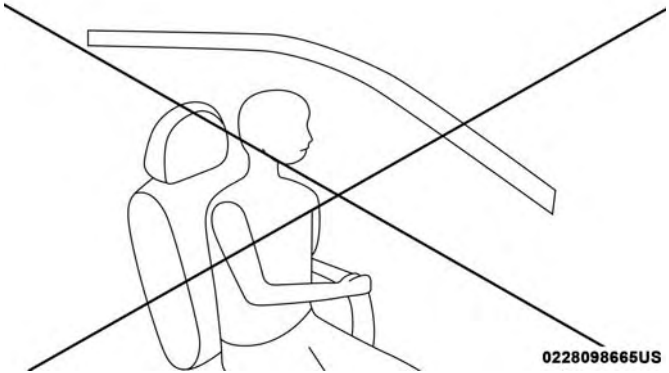

Not Seated Properly

WARNING!

- **If a child restraint system, child, small teenager or adult in the front passenger seat is seated improperly, the occupant may provide an output signal to the OCS that is different from the occupant's properly seated weight input. This may result in serious injury or death in a collision.**
- **Always wear your seat belt and sit properly, with the seatback in an upright position, your back against**

(Continued)

WARNING! ***(Continued)***

the seatback, sitting upright, facing forward, in the center of the seat, with your feet comfortably on or near the floor.

- **Do not carry or hold any objects (e.g., backpacks, boxes, etc.) while seated in the front passenger seat. Holding an object may provide an output signal to the OCS that is different than the occupant's properly seated weight input, which may result in serious injury or death in a collision.**
- **Placing an object on the floor under the front passenger seat may prevent the OCS from working properly, which may result in serious injury or death in a collision. Do not place any objects on the floor under the front passenger seat.**

The Air Bag Warning Light in the instrument panel will turn on whenever the OCS is unable to classify the front passenger seat status. A malfunction in the OCS may affect the operation of the air bag system.

If the Air Bag Warning Light does not come on, or stays on after you start the vehicle, or it comes on as you drive, take the vehicle to an authorized dealer for service immediately.

The passenger seat assembly contains critical OCS components that may affect the Passenger Advanced Front Air Bag inflation. In order for the OCS to properly classify the seated weight of a front seat passenger, the OCS components must function as designed. Do not make any modifications to the front passenger seat components, assembly, or to the seat cover. If the seat, trim cover, or cushion needs service for any reason, take the vehicle to an authorized dealer. Only FCA US LLC approved seat accessories may be used.

The following requirements must be strictly followed:

- Do not modify the front passenger seat assembly or components in any way.
- Do not use prior or future model year seat covers or cushions not designated by FCA US LLC for the specific model being repaired. Always use the correct seat cover and cushion specified for the vehicle.
- Do not replace the seat cover or cushion with an aftermarket seat cover or cushion.
- Do not add a secondary seat cover or mat.
- At no time should any Supplemental Restraint System (SRS) component or SRS related component or fastener be modified or replaced with any part except those which are approved by FCA US LLC.

WARNING!

- **Unapproved modifications or service procedures to the passenger seat assembly, its related components, seat cover or cushion may inadvertently change the air bag deployment in case of a frontal collision. This could result in death or serious injury to the front passenger if the vehicle is involved in a collision. A modified vehicle may not comply with required Federal Motor Vehicle Safety Standards (FMVSS) and/or Canadian Motor Vehicle Safety Standards (CMVSS).**
- **If it is necessary to modify the air bag system for persons with disabilities, contact an authorized dealer.**

Knee Impact Bolsters

The Knee Impact Bolsters help protect the knees of the driver and front passenger, and position the front occupants for improved interaction with the front air bags.

WARNING!

- **Do not drill, cut, or tamper with the knee impact bolsters in any way.**
- **Do not mount any accessories to the knee impact bolsters such as alarm lights, stereos, citizen band radios, etc.**

Supplemental Driver And Front Passenger Knee Air Bags

This vehicle is equipped with a Supplemental Driver Knee Air Bag mounted in the instrument panel below the steering column and a Supplemental Passenger Knee Air Bag mounted in the instrument panel below the glove compartment. The Supplemental Knee Air Bags provide enhanced protection during a frontal impact by working together with the seat belts, pretensioners, and front air bags.

Supplemental Side Air Bags

Supplemental Seat-Mounted Side Air Bags (SABs)

This vehicle is equipped with Supplemental Seat-Mounted Side Air Bags (SABs).

Supplemental Seat-Mounted Side Air Bags (SABs) are located in the outboard side of the front seats. The SABs are marked with “SRS AIRBAG” or “AIRBAG” on a label or on the seat trim on the outboard side of the seats.

The SABs may help to reduce the risk of occupant injury during certain side impacts, in addition to the injury reduction potential provided by the seat belts and body structure.

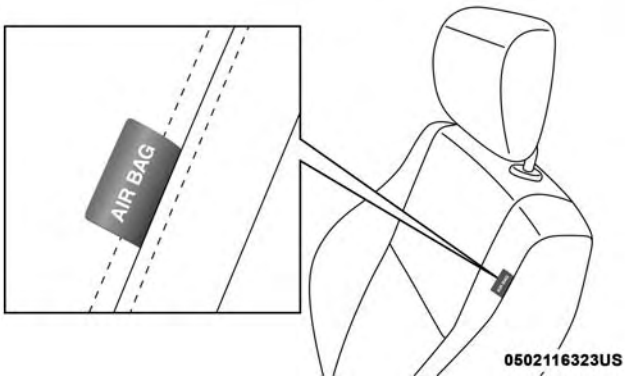

Front Supplemental Seat-Mounted Side Air Bag

When the SAB deploys, it opens the seam on the outboard side of the seatback’s trim cover. The inflating SAB deploys

through the seat seam into the space between the occupant and the door. The SAB moves at a very high speed and with such a high force that it could injure occupants if they are not seated properly, or if items are positioned in the area where the SAB inflates. Children are at an even greater risk of injury from a deploying air bag.

WARNING!

Do not use accessory seat covers or place objects between you and the Side Air Bags; the performance could be adversely affected and/or objects could be pushed into you, causing serious injury.

Supplemental Side Air Bag Inflatable Curtains (SABICs)

This vehicle is equipped with Supplemental Side Air Bag Inflatable Curtains (SABICs).

Supplemental Side Air Bag Inflatable Curtains (SABICs) are located above the side windows. The trim covering the SABICs is labeled “SRS AIRBAG” or “AIRBAG.”

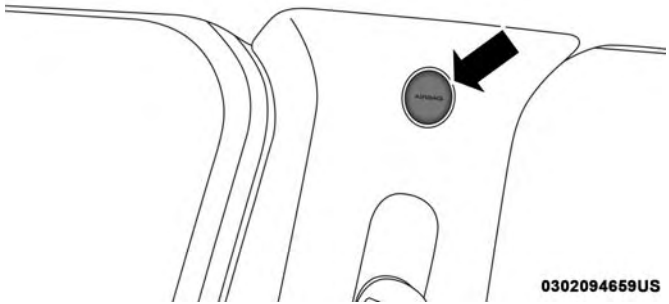

Supplemental Side Air Bag Inflatable Curtain (SABIC) Label Location

SABICs may help reduce the risk of head and other injuries to front and rear seat outboard occupants in certain side impacts, in addition to the injury reduction potential provided by the seat belts and body structure.

The SABIC deploys downward, covering the side windows. An inflating SABIC pushes the outside edge of the headliner out of the way and covers the window. The SABICs inflate with enough force to injure occupants if they are not belted and seated properly, or if items are

positioned in the area where the SABICs inflate. Children are at an even greater risk of injury from a deploying air bag.

The SABICs may help reduce the risk of partial or complete ejection of vehicle occupants through side windows in certain side impact events.

WARNING!

- **Do not mount equipment, or stack luggage or other cargo up high enough to block the deployment of the SABICs. The trim covering above the side windows where the SABIC and its deployment path are located should remain free from any obstructions.**
- **In order for the SABICs to work as intended, do not install any accessory items in your vehicle which could alter the roof. Do not add an aftermarket sunroof to your vehicle. Do not add roof racks that require permanent attachments (bolts or screws) for installation on the vehicle roof. Do not drill into the roof of the vehicle for any reason.**

Side Impacts

The Side Air Bags are designed to activate in certain side impacts. The Occupant Restraint Controller (ORC) determines whether the deployment of the Side Air Bags in a particular impact event is appropriate, based on the severity and type of collision. The side impact sensors aid the ORC in determining the appropriate response to impact events. The system is calibrated to deploy the Side Air Bags on the impact side of the vehicle during impacts that require Side Air Bag occupant protection. In side impacts, the Side Air Bags deploy independently; a left side impact deploys the left Side Air Bags only and a right-side impact deploys the right Side Air Bags only. Vehicle damage by itself is not a good indicator of whether or not Side Air Bags should have deployed.

The Side Air Bags will not deploy in all side collisions, including some collisions at certain angles, or some side collisions that do not impact the area of the passenger compartment. The Side Air Bags may deploy during angled or offset frontal collisions where the front air bags deploy.

Side Air Bags are a supplement to the seat belt restraint system. Side Air Bags deploy in less time than it takes to blink your eyes.

WARNING!

- **Occupants, including children, who are up against or very close to Side Air Bags can be seriously injured or killed. Occupants, including children, should never lean on or sleep against the door, side windows, or area where the side air bags inflate, even if they are in an infant or child restraint.**
- **Seat belts (and child restraints where appropriate) are necessary for your protection in all collisions. They also help keep you in position, away from an inflating Side Air Bag. To get the best protection from the Side Air Bags, occupants must wear their seat belts properly and sit upright with their backs against the seats. Children must be properly restrained in a child restraint or booster seat that is appropriate for the size of the child.**

WARNING!

- **Side Air Bags need room to inflate. Do not lean against the door or window. Sit upright in the center of the seat.**
- **Being too close to the Side Air Bags during deployment could cause you to be severely injured or killed.**
- **Relying on the Side Air Bags alone could lead to more severe injuries in a collision. The Side Air Bags work with your seat belt to restrain you properly. In some collisions, Side Air Bags won't deploy at all. Always wear your seat belt even though you have Side Air Bags.**

NOTE: Air bag covers may not be obvious in the interior trim, but they will open during air bag deployment.

Rollover Events

Side Air Bags are designed to activate in certain rollover events. The ORC determines whether the deployment of the Side Air Bags in a particular rollover event is appropriate, based on the severity and type of collision. Vehicle damage by itself is not a good indicator of whether or not Side Air Bags should have deployed.

The Side Air Bags will not deploy in all rollover events. The rollover sensing system determines if a rollover event may be in progress and whether deployment is appropriate. In the event the vehicle experiences a rollover or near rollover event, and deployment of the Side Air Bags is appropriate, the rollover sensing system will also deploy the seat belt pretensioners on both sides of the vehicle.

The SABICs may help reduce the risk of partial or complete ejection of vehicle occupants through side windows in certain rollover or side impact events.

Air Bag System Components

NOTE: The Occupant Restraint Controller (ORC) monitors the internal circuits and interconnecting wiring associated with electrical Air Bag System Components listed below:

- Occupant Restraint Controller (ORC)
- Air Bag Warning Light
- Steering Wheel and Column
- Instrument Panel
- Knee Impact Bolsters
- Driver and Front Passenger Air Bags
- Seat Belt Buckle Switch
- Supplemental Side Air Bags
- Supplemental Knee Air Bags
- Front and Side Impact Sensors
- Seat Belt Pretensioners
- Seat Track Position Sensors
- Occupant Classification System

If A Deployment Occurs

The front air bags are designed to deflate immediately after deployment.

NOTE: Front and/or side air bags will not deploy in all collisions. This does not mean something is wrong with the air bag system.

If you do have a collision which deploys the air bags, any or all of the following may occur:

- The air bag material may sometimes cause abrasions and/or skin reddening to the occupants as the air bags deploy and unfold. The abrasions are similar to friction rope burns or those you might get sliding along a carpet or gymnasium floor. They are not caused by contact with chemicals. They are not permanent and normally heal

quickly. However, if you haven't healed significantly within a few days, or if you have any blistering, see your doctor immediately.

- As the air bags deflate, you may see some smoke-like particles. The particles are a normal by-product of the process that generates the non-toxic gas used for air bag inflation. These airborne particles may irritate the skin, eyes, nose, or throat. If you have skin or eye irritation, rinse the area with cool water. For nose or throat irritation, move to fresh air. If the irritation continues, see your doctor. If these particles settle on your clothing, follow the garment manufacturer's instructions for cleaning.

Do not drive your vehicle after the air bags have deployed. If you are involved in another collision, the air bags will not be in place to protect you.

WARNING!

Deployed air bags and seat belt pretensioners cannot protect you in another collision. Have the air bags, seat belt pretensioners, and the seat belt retractor assemblies replaced by an authorized dealer immediately. Also, have the Occupant Restraint Controller System serviced as well.

NOTE:

- Air bag covers may not be obvious in the interior trim, but they will open during air bag deployment.
- After any collision, the vehicle should be taken to an authorized dealer immediately.

Enhanced Accident Response System

In the event of an impact, if the communication network remains intact, and the power remains intact, depending on the nature of the event, the ORC will determine whether to have the Enhanced Accident Response System perform the following functions:

- Cut off fuel to the engine (If Equipped)
- Cut off battery power to the electric motor (If Equipped)
- Flash hazard lights as long as the battery has power
- Turn on the interior lights, which remain on as long as the battery has power or for 15 minutes from the intervention of the Enhanced Accident Response System.
- Unlock the power door locks.

Your vehicle may also be designed to perform any of these other functions in response to the Enhanced Accident Response System:

- Turn off the Fuel Filter Heater, Turn off the HVAC Blower Motor, Close the HVAC Circulation Door
- Cut off battery power to the:
  - Engine
  - Electric Motor (if equipped)
  - Electric power steering
  - Brake booster
  - Electric park brake
  - Automatic transmission gear selector
  - Horn
  - Front wiper
  - Headlamp washer pump

NOTE: After an accident, remember to cycle the ignition to the STOP (OFF/LOCK) position and remove the key from the ignition switch to avoid draining the battery. Carefully check the vehicle for fuel leaks in the engine compartment and on the ground near the engine compartment and fuel tank before resetting the system and starting the engine. If there are no fuel leaks or damage to the vehicle electrical devices (e.g. headlights) after an accident, reset the system by following the procedure described below. If you have any doubt, contact an authorized dealer.

Enhanced Accident Response System Reset Procedure

In order to reset the Enhanced Accident Response System functions after an event, the ignition switch must be changed from ignition START or ON/RUN to ignition OFF. Carefully check the vehicle for fuel leaks in the engine compartment and on the ground near the engine compartment and fuel tank before resetting the system and starting the engine.

Maintaining Your Air Bag System

WARNING!

- **Modifications to any part of the air bag system could cause it to fail when you need it. You could be injured if the air bag system is not there to protect you. Do not modify the components or wiring, including adding any kind of badges or stickers to the steering wheel hub trim cover or the upper passenger side of the instrument panel. Do not modify the front bumper, vehicle body structure, or add aftermarket side steps or running boards.**
- **It is dangerous to try to repair any part of the air bag system yourself. Be sure to tell anyone who works on your vehicle that it has an air bag system.**
- **Do not attempt to modify any part of your air bag system. The air bag may inflate accidentally or may not function properly if modifications are made. Take your vehicle to an authorized dealer for any air bag system service. If your seat, including your trim cover and cushion, needs to be serviced in any way (including removal or loosening/tightening of seat attachment bolts), take the vehicle to an authorized**

(Continued)

WARNING! *(Continued)*

dealer. Only manufacturer approved seat accessories may be used. If it is necessary to modify the air bag system for persons with disabilities, contact an authorized dealer.

Event Data Recorder (EDR)

This vehicle is equipped with an event data recorder (EDR). The main purpose of an EDR is to record, in certain crash or near crash-like situations, such as an air bag deployment or hitting a road obstacle, data that will assist in understanding how a vehicle's systems performed. The EDR is designed to record data related to vehicle dynamics and safety systems for a short period of time, typically 30 seconds or less. The EDR in this vehicle is designed to record such data as:

- How various systems in your vehicle were operating;
- Whether or not the driver and passenger safety belts were buckled/fastened;
- How far (if at all) the driver was depressing the accelerator and/or brake pedal; and,
- How fast the vehicle was traveling.

These data can help provide a better understanding of the circumstances in which crashes and injuries occur.

NOTE: EDR data are recorded by your vehicle only if a non-trivial crash situation occurs; no data are recorded by the EDR under normal driving conditions and no personal data (e.g., name, gender, age, and crash location) are recorded. However, other parties, such as law enforcement, could combine the EDR data with the type of personally identifying data routinely acquired during a crash investigation.

To read data recorded by an EDR, special equipment is required, and access to the vehicle or the EDR is needed. In addition to the vehicle manufacturer, other parties, such as law enforcement, that have the special equipment, can read the information if they have access to the vehicle or the EDR.

Child Restraints

Everyone in your vehicle needs to be buckled up at all times, including babies and children. Every state in the United States, and every Canadian province, requires that small children ride in proper restraint systems. This is the law, and you can be prosecuted for ignoring it.

Children 12 years or younger should ride properly buckled up in a rear seat, if available. According to crash statistics, children are safer when properly restrained in the rear seats rather than in the front.

WARNING!

In a collision, an unrestrained child can become a projectile inside the vehicle. The force required to hold even an infant on your lap could become so great that you could not hold the child, no matter how strong you are. The child and others could be badly injured or killed. Any child riding in your vehicle should be in a proper restraint for the child's size.

There are different sizes and types of restraints for children from newborn size to the child almost large enough for an adult safety belt. Always check the child seat Owner's Manual to make sure you have the correct seat for your child. Carefully read and follow all the instructions and warnings in the child restraint Owner's Manual and on all the labels attached to the child restraint.

Before buying any restraint system, make sure that it has a label certifying that it meets all applicable Safety Standards. You should also make sure that you can install it in the vehicle where you will use it.

NOTE:

- For additional information, refer to http://www.nhtsa.gov/parents-and-caregivers or call: 1–888–327–4236
- Canadian residents should refer to Transport Canada's website for additional information: http://www.tc.gc.ca/eng/motorvehiclesafety/safedrivers-childsafety-index-53.htm

Summary Of Recommendations For Restraining Children In Vehicles

	Child Size, Height, Weight Or Age	Recommended Type Of Child Restraint
Infants and Toddlers	Children who are two years old or younger and who have not reached the height or weight limits of their child restraint	Either an Infant Carrier or a Convertible Child Restraint, facing rearward in a rear seat of the vehicle
Small Children	Children who are at least two years old or who have outgrown the height or weight limit of their rear-facing child restraint	Forward-Facing Child Restraint with a five-point Harness, facing forward in a rear seat of the vehicle
Larger Children	Children who have outgrown their forward-facing child restraint, but are too small to properly fit the vehicle's seat belt	Belt Positioning Booster Seat and the vehicle seat belt, seated in a rear seat of the vehicle

	Child Size, Height, Weight Or Age	Recommended Type Of Child Restraint
Children Too Large for Child Restraints	Children 12 years old or younger, who have outgrown the height or weight limit of their booster seat	Vehicle Seat Belt, seated in a rear seat of the vehicle

Infant And Child Restraints

Safety experts recommend that children ride rear-facing in the vehicle until they are two years old or until they reach either the height or weight limit of their rear-facing child restraint. Two types of child restraints can be used rear-facing: infant carriers and convertible child seats.

The infant carrier is only used rear-facing in the vehicle. It is recommended for children from birth until they reach the weight or height limit of the infant carrier. Convertible child seats can be used either rear-facing or forward-facing in the vehicle. Convertible child seats often have a higher weight limit in the rear-facing direction than infant carriers do, so they can be used rear-facing by children who have outgrown their infant carrier but are still less than at least two years old. Children should remain rear-facing until they reach the highest weight or height allowed by their convertible child seat.

WARNING!

- **Never place a rear-facing child restraint in front of an air bag. A deploying passenger front air bag can cause death or serious injury to a child 12 years or younger, including a child in a rear-facing child restraint.**
- **Never install a rear-facing child restraint in the front seat of a vehicle. Only use a rear-facing child restraint in the rear seat. If the vehicle does not have a rear seat, do not transport a rear-facing child restraint in that vehicle.**

WARNING!

Do not install a rear-facing car seat using a rear support leg in this vehicle. The floor of this vehicle is not designed to manage the crash forces of this type of car

(Continued)

WARNING! *(Continued)*

seat. In a crash, the support leg may not function as it was designed by the car seat manufacturer, and your child may be more severely injured as a result.

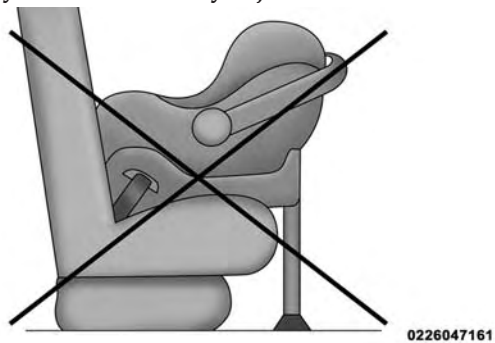

Older Children And Child Restraints

Children who are two years old or who have outgrown their rear-facing convertible child seat can ride forward-facing in the vehicle. Forward-facing child seats and convertible child seats used in the forward-facing direction are for children who are over two years old or who have outgrown the rear-facing weight or height limit of their rear-facing convertible child seat. Children should remain in a forward-facing child seat with a harness for as long as possible, up to the highest weight or height allowed by the child seat.

All children whose weight or height is above the forward-facing limit for the child seat should use a belt-positioning booster seat until the vehicle's seat belts fit properly. If the child cannot sit with knees bent over the vehicle's seat cushion while the child's back is against the seatback, they should use a belt-positioning booster seat. The child and belt-positioning booster seat are held in the vehicle by the seat belt.

WARNING!

- **Improper installation can lead to failure of an infant or child restraint. It could come loose in a collision. The child could be badly injured or killed. Follow the child restraint manufacturer's directions exactly when installing an infant or child restraint.**
- **After a child restraint is installed in the vehicle, do not move the vehicle seat forward or rearward because it can loosen the child restraint attachments.**

(Continued)

WARNING! *(Continued)*

Remove the child restraint before adjusting the vehicle seat position. When the vehicle seat has been adjusted, reinstall the child restraint.

- **When your child restraint is not in use, secure it in the vehicle with the seat belt or LATCH anchorages, or remove it from the vehicle. Do not leave it loose in the vehicle. In a sudden stop or accident, it could strike the occupants or seatbacks and cause serious personal injury.**

Children Too Large For Booster Seats

Children who are large enough to wear the shoulder belt comfortably, and whose legs are long enough to bend over the front of the seat when their back is against the seatback, should use the seat belt in a rear seat. Use this simple 5-step test to decide whether the child can use the vehicle's seat belt alone:

1. Can the child sit all the way back against the back of the vehicle seat?
2. Do the child's knees bend comfortably over the front of the vehicle seat – while the child is still sitting all the way back?
3. Does the shoulder belt cross the child's shoulder between the neck and arm?
4. Is the lap part of the belt as low as possible, touching the child's thighs and not the stomach?
5. Can the child stay seated like this for the whole trip?

If the answer to any of these questions was "no," then the child still needs to use a booster seat in this vehicle. If the child is using the lap/shoulder belt, check seat belt fit periodically and make sure the seat belt buckle is latched. A child's squirming or slouching can move the belt out of position. If the shoulder belt contacts the face or neck, move the child closer to the center of the vehicle, or use a booster seat to position the seat belt on the child correctly.

WARNING!

Never allow a child to put the shoulder belt under an arm or behind their back. In a crash, the shoulder belt will not protect a child properly, which may result in serious injury or death. A child must always wear both the lap and shoulder portions of the seat belt correctly.

Recommendations For Attaching Child Restraints

Restraint Type	Combined Weight of the Child + Child Restraint	Use Any Attachment Method Shown With An "X" Below			
		LATCH – Lower Anchors Only	Seat Belt Only	LATCH – Lower Anchors + Top Tether Anchor	Seat Belt + Top Tether Anchor
Rear-Facing Child Restraint	Up to 65 lbs (29.5 kg)	X	X		
Rear-Facing Child Restraint	More than 65 lbs (29.5 kg)		X		
Forward-Facing Child Restraint	Up to 65 lbs (29.5 kg)			X	X
Forward-Facing Child Restraint	More than 65 lbs (29.5 kg)				X

Lower Anchors And Tethers For CHildren (LATCH) Restraint System

LATCH Label

Your vehicle is equipped with the child restraint anchorage system called LATCH, which stands for Lower Anchors and Tethers for CHildren. The LATCH system has three vehicle anchor points for installing LATCH-equipped child seats. There are two lower anchorages located at the back of the seat cushion where it meets the seatback and one top tether anchorage located behind the seating position. These anchorages are used to install LATCH-equipped child seats without using the vehicle's seat belts. Some seating positions may have a top tether anchorage but no lower anchorages. In these seating positions, the seat belt must be used with the top tether anchorage to install the child restraint. Please see the following table for more information.

LATCH Positions For Installing Child Restraints In This Vehicle

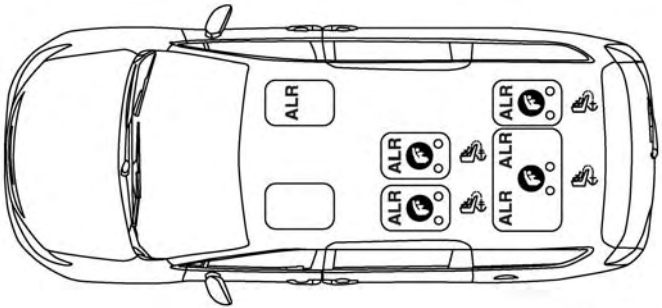

7 Passenger Bench Seat LATCH Positions

Lower Anchorage Symbol 2 anchorages per seating position
Top Tether Anchorage Symbol

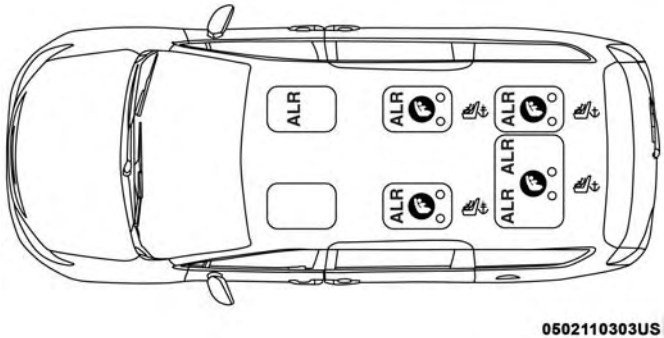

7 Passenger Stow 'n Go Seating LATCH Positions

Lower Anchorage Symbol 2 anchorages per seating position
Top Tether Anchorage Symbol

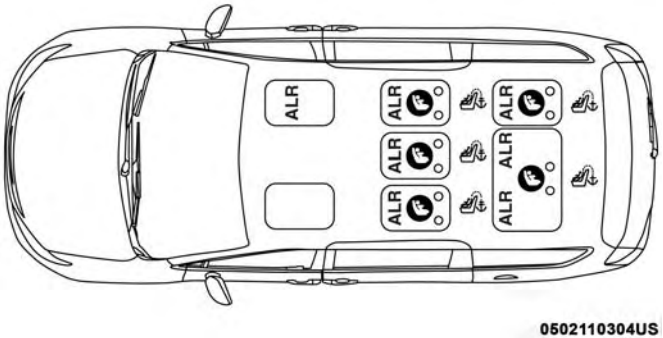

8 Passenger LATCH Positions

Lower Anchorage Symbol 2 anchorages per seating position
Top Tether Anchorage Symbol

Frequently Asked Questions About Installing Child Restraints With LATCH		
What is the weight limit (child's weight + weight of the child restraint) for using the LATCH anchorage system to attach the child restraint?	65 lbs (29.5 kg)	Use the LATCH anchorage system until the combined weight of the child and the child restraint is 65 lbs (29.5 kg). Use the seat belt and tether anchor instead of the LATCH system once the combined weight is more than 65 lbs (29.5 kg).

Frequently Asked Questions About Installing Child Restraints With LATCH		
Can the LATCH anchorages and the seat belt be used together to attach a rear-facing or forward-facing child restraint?	No	Do not use the seat belt when you use the LATCH anchorage system to attach a rear-facing or forward-facing child restraint. Booster seats may be attached to the LATCH anchorages if allowed by the booster seat manufacturer. See your booster seat owner's manual for more information.
Can two child restraints be attached using a common lower LATCH anchorage?	No	Never "share" a LATCH anchorage with two or more child restraints. If the center position does not have dedicated LATCH lower anchorages, use the seat belt to install a child seat in the center position next to a child seat using the LATCH anchorages in an outboard position.
Can the rear-facing child restraint touch the back of the front passenger seat?	Yes	The child seat may touch the back of the front passenger seat if the child restraint manufacturer also allows contact. See your child restraint owner's manual for more information.

Frequently Asked Questions About Installing Child Restraints With LATCH		
Can the rear head restraints be removed?	Yes	The 2nd row head restraints on bench and the center head restraint in the 8 passenger vehicle can be removed if they interfere with the installation of the child restraint. 2nd row Stow 'n Go head restraints are not removable. The 3rd row center head restraint is removable in all vehicles, but the 3rd row outboard head restraints are not removable. Refer to "Head Restraints" in "Getting To Know Your Vehicle" for further information.

NOTE: If the folding, non-adjustable head restraint interferes with the installation of the child restraint, the head restraint may be folded and the child seat installed in front of it.

WARNING!

Always make sure the head restraint is in its upright position when the seat is to be used by an occupant who is not in a child restraint. Sitting in a seat with the head restraint in its lowered position could result in serious injury or death in a collision.

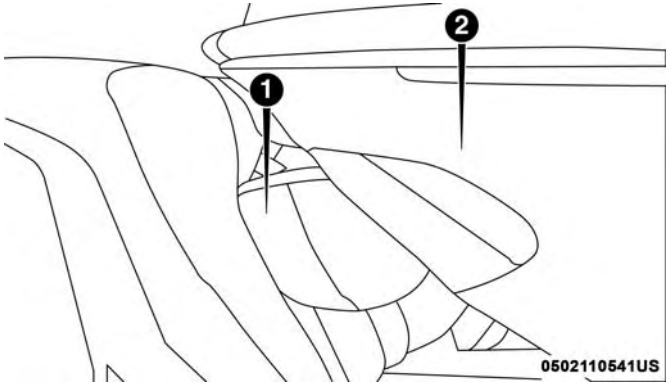

Car Seat With Head Restraint Folded

1 — Folded Headrest
2 — Child Restraint

Locating The LATCH Anchorages

The lower anchorages are round bars that are found at the rear of the seat cushion where it meets the seatback, below the anchorage symbols on the seatback. They are just visible when you lean into the rear seat to install the child restraint. You will easily feel them if you run your finger along the gap between the seatback and seat cushion.

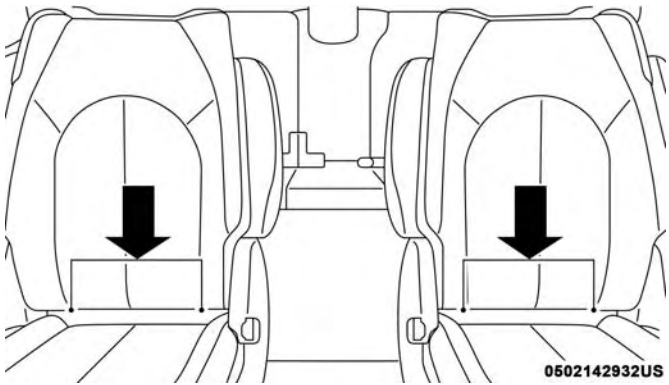

LATCH Anchorages (Second Row Anchorages Shown)
7 Passenger Stow n′ Go Seating

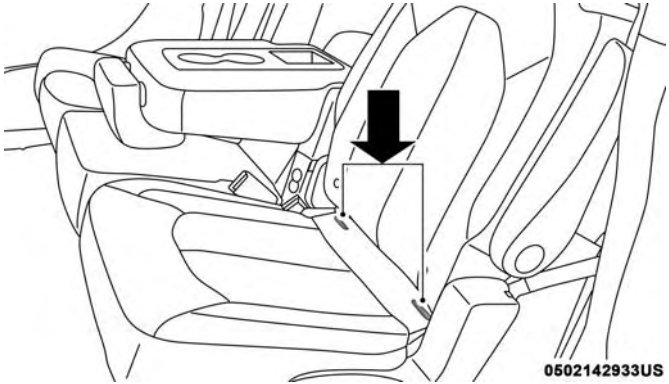

LATCH Anchorages (Second Row Anchorages Shown) 8 Passenger Seating

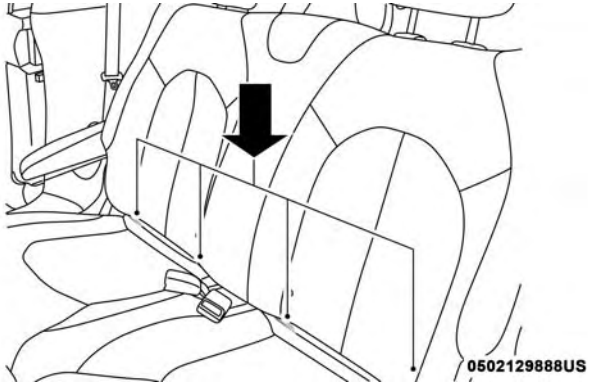

LATCH Anchorages (Second Row Bench Anchorages Shown)

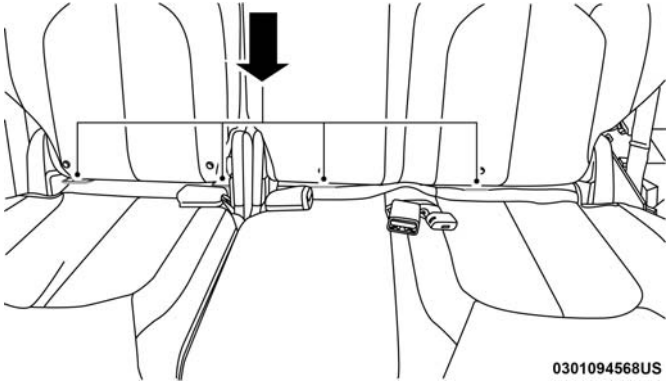

LATCH Anchorages (Third Row 60/40 Anchorages Shown)

Locating The Upper Tether Anchorages

There are tether strap anchorages located behind all second row seating positions. The third row has a tether anchor on the 40% seat for the right outboard position and in the center of the 60% seat for either the center or left outboard seating position. All tether anchorages are located on the back of the seat, near the floor.

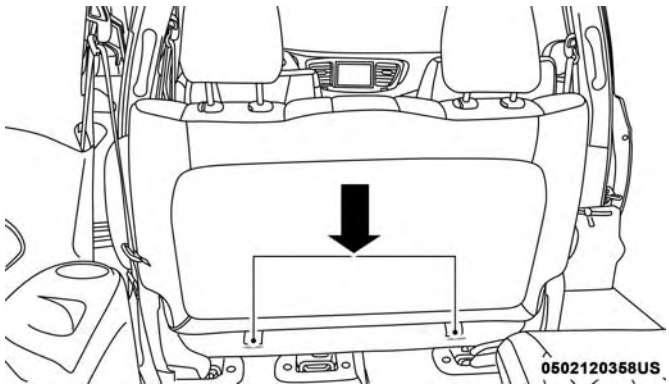

Tether Strap Anchorages (Second Row Bench Anchorage Shown)

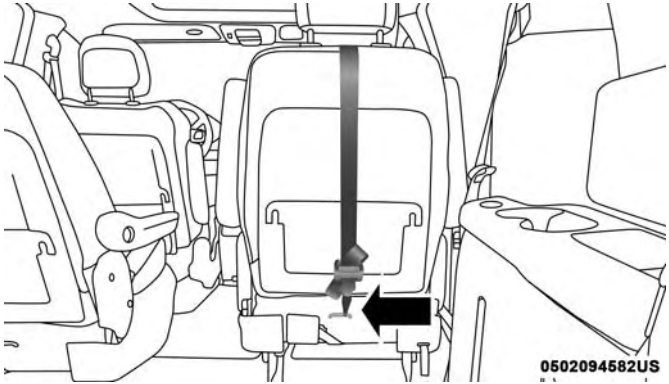

Tether Strap Anchorages (Second Row 7 Passenger Stow n′ Go Anchorage Shown)

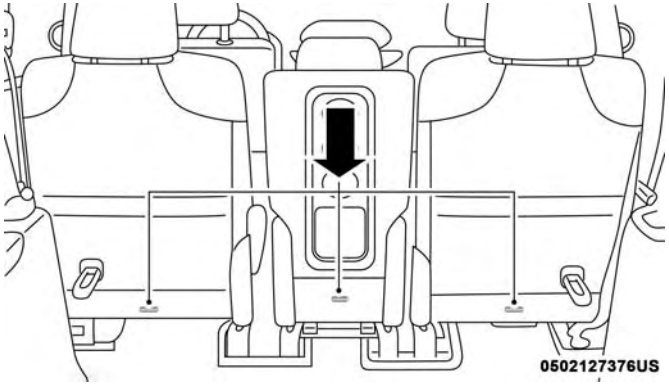

Tether Strap Anchorages (Second Row 8 Passenger Anchorage Shown)

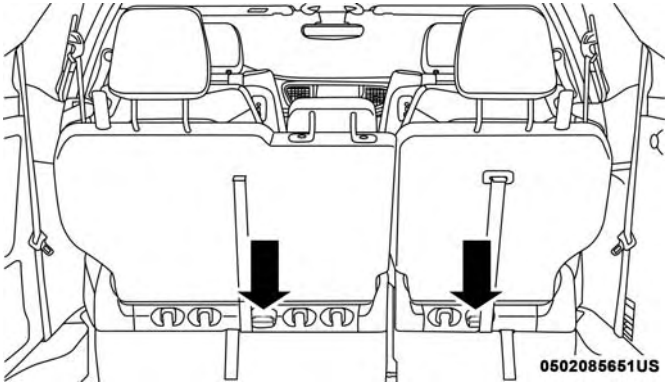

Tether Strap Anchorages (Third Row 60/40 Anchorage Shown)

LATCH-compatible child restraint systems will be equipped with a rigid bar or a flexible strap on each side. Each will have a hook or connector to attach to the lower anchorage and a way to tighten the connection to the anchorage. Forward-facing child restraints and some rear-facing child restraints will also be equipped with a tether strap. The tether strap will have a hook at the end to attach to the top tether anchorage and a way to tighten the strap after it is attached to the anchorage.

Center Seat LATCH

This vehicle has 4 lower LATCH anchorages in the third row, rear seat. Anchorages A and B are used for the right outboard position behind the front passenger (1). Anchorages C and D are used for the center seating position (2). The left outboard position (3) does not have lower anchorages. Do not install a child restraint using anchorages B and C. This is not a LATCH position in your vehicle.

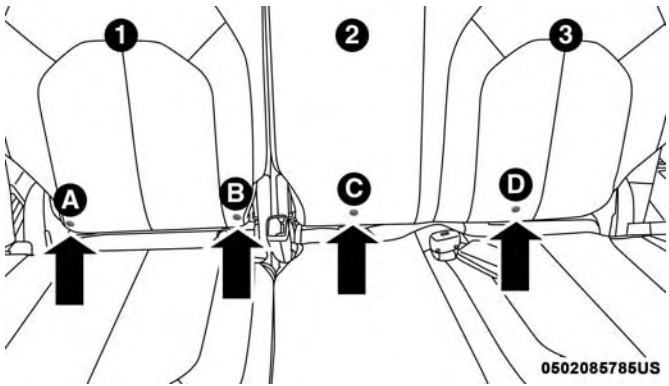

Center Seat LATCH Positions

If a child restraint installed in the center position blocks the seat belt webbing or buckle for the outboard position, do

not use that outboard position. If a child seat in the center position blocks the outboard LATCH anchors or seat belt, do not install a child seat in that outboard position.

WARNING!

- **Use anchorages C and D to install a LATCH-compatible child restraint in the center seating position (2). Do not install a LATCH-compatible child restraint using anchorages B and C. This is not a LATCH-compatible position in your vehicle.**
- **Never use the same lower anchorage to attach more than one child restraint. Please refer to "To Install A LATCH-Compatible Child Restraint" for typical installation instructions.**

Always follow the directions of the child restraint manufacturer when installing your child restraint. Not all child restraint systems will be installed as described here.

To Install A LATCH-Compatible Child Restraint

If the selected seating position has a Switchable Automatic Locking Retractor (ALR) seat belt, stow the seat belt, following the instructions below. See the section "Installing Child Restraints Using the Vehicle Seat Belt" to check what type of seat belt each seating position has.

1. Loosen the adjusters on the lower straps and on the tether strap of the child seat so that you can more easily attach the hooks or connectors to the vehicle anchorages.
2. Place the child seat between the lower anchorages for that seating position. For some second row seats, you may need to recline the seat and / or raise the head restraint (if adjustable) to get a better fit. If the rear seat can be moved forward and rearward in the vehicle, you may wish to move it to its rear-most position to make room for the child seat. You may also move the front seat forward to allow more room for the child seat.
3. Attach the lower hooks or connectors of the child restraint to the lower anchorages in the selected seating position.
4. If the child restraint has a tether strap, connect it to the top tether anchorage. See the section "Installing Child Restraints Using the Top Tether Anchorage" for directions to attach a tether anchor.
5. Tighten all of the straps as you push the child restraint rearward and downward into the seat. Remove slack in the straps according to the child restraint manufacturer's instructions.

6. Test that the child restraint is installed tightly by pulling back and forth on the child seat at the belt path. It should not move more than 1 inch (25.4 mm) in any direction.

How To Stow An Unused Switchable-ALR (ALR) Seat Belt:

When using the LATCH attaching system to install a child restraint, stow all ALR seat belts that are not being used by other occupants or being used to secure child restraints. An unused belt could injure a child if they play with it and accidentally lock the seat belt retractor. Before installing a child restraint using the LATCH system, buckle the seat belt behind the child restraint and out of the child's reach. If the buckled seat belt interferes with the child restraint installation, instead of buckling it behind the child restraint, route the seat belt through the child restraint belt path and then buckle it. Do not lock the seat belt. Remind all children in the vehicle that the seat belts are not toys and that they should not play with them.

WARNING!

- **Improper installation of a child restraint to the LATCH anchorages can lead to failure of the restraint. The child could be badly injured or killed. Follow the child restraint manufacturer's directions exactly when installing an infant or child restraint.**
- **Child restraint anchorages are designed to withstand only those loads imposed by correctly-fitted child restraints. Under no circumstances are they to be used for adult seat belts, harnesses, or for attaching other items or equipment to the vehicle.**

Installing Child Restraints Using The Vehicle Seat Belt

Child restraint systems are designed to be secured in vehicle seats by lap belts or the lap belt portion of a lap/shoulder belt.

WARNING!

- **Improper installation or failure to properly secure a child restraint can lead to failure of the restraint. The child could be badly injured or killed.**

(Continued)

WARNING! *(Continued)*

- **Follow the child restraint manufacturer's directions exactly when installing an infant or child restraint.**

The seat belts in the passenger seating positions are equipped with a Switchable Automatic Locking Retractor (ALR) that is designed to keep the lap portion of the seat belt tight around the child restraint so that it is not necessary to use a locking clip. The ALR retractor can be "switched" into a locked mode by pulling all of the webbing out of the retractor and then letting the webbing retract back into the retractor. If it is locked, the ALR will make a clicking noise while the webbing is pulled back into the retractor.

Refer to the "Automatic Locking Mode" description in "Switchable Automatic Locking Retractors (ALR)" under "Occupant Restraint Systems" for additional information on ALR.

Please see the table below and the following sections for more information.

Lap/Shoulder Belt Systems For Installing Child Restraints In This Vehicle

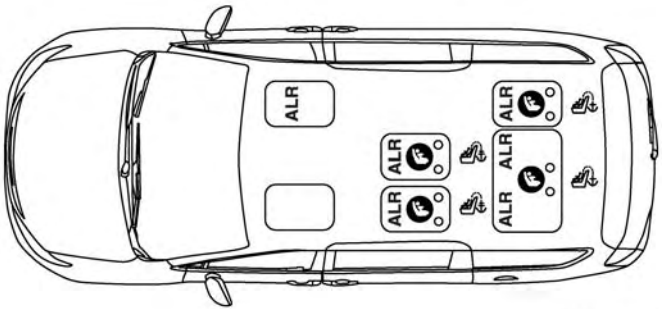

7 Passenger Bench Seat Automatic Locking Retractor (ALR) Locations

ALR = Switchable Automatic Locking Retractor
Top Tether Anchorage Symbol

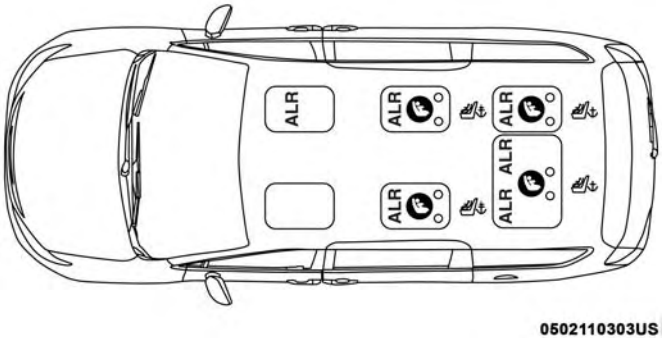

7 Passenger Stow 'n Go Seating Automatic Locking Retractor (ALR) Locations

ALR = Switchable Automatic Locking Retractor
Top Tether Anchorage Symbol

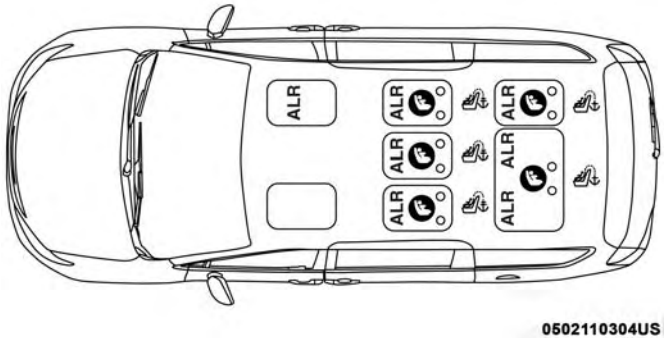

8 Passenger Automatic Locking Retractor (ALR) Locations

ALR = Switchable Automatic Locking Retractor
Top Tether Anchorage Symbol

Frequently Asked Questions		
What is the weight limit (child's weight + weight of the child restraint) for using the Tether Anchor with the seat belt to attach a forward facing child restraint?	Weight limit of the Child Restraint	Always use the tether anchor when using the seat belt to install a forward facing child restraint, up to the recommended weight limit of the child restraint.
Can the rear-facing child restraint touch the back of the front passenger seat?	Yes	Contact between the front passenger seat and the child restraint is allowed, if the child restraint manufacturer also allows contact.
Can the rear head restraints be removed?	Yes	The 2nd row head restraints on bench and the center head restraint in the 8 passenger vehicle can be removed if they interfere with the installation of the child restraint. 2nd row Stow 'n Go head restraints are not removable. The 3rd row center head restraint is removable in all vehicles, but the 3rd row outboard head restraints are not removable. Refer to "Head Restraints" in "Getting To Know Your Vehicle" for further information.

Frequently Asked Questions		
Can the buckle stalk be twisted to tighten the seat belt against the belt path of the child restraint?	No	Do not twist the buckle stalk in a seating position with an ALR retractor.

NOTE: If the folding, non-adjustable head restraint interferes with the installation of the child restraint, the head restraint may be folded and the child seat installed in front of it.

WARNING!

Always make sure the head restraint is in its upright position when the seat is to be used by an occupant who is not in a child restraint. Sitting in a seat with the head restraint in its lowered position could result in serious injury or death in a collision.

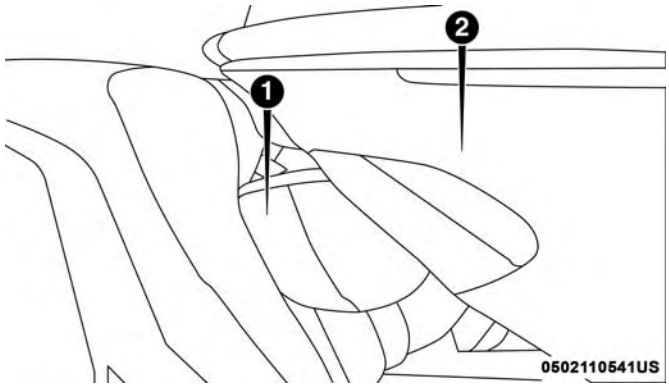

Car Seat With Head Restraint Folded

1 — Folded Headrest
2 — Child Restraint

Installing A Child Restraint With A Switchable Automatic Locking Retractor (ALR):

Child restraint systems are designed to be secured in vehicle seats by lap belts or the lap belt portion of a lap/shoulder belt.

WARNING!

- **Improper installation or failure to properly secure a child restraint can lead to failure of the restraint. The child could be badly injured or killed.**
- **Follow the child restraint manufacturer's directions exactly when installing an infant or child restraint.**

1. Place the child seat in the center of the seating position. For some second row seats, you may need to recline the seat and/or raise the head restraint (if adjustable) to get a better fit. If the rear seat can be moved forward and rearward in the vehicle, you may wish to move it to its rear-most position to make room for the child seat. You may also move the front seat forward to allow more room for the child seat.
2. Pull enough of the seat belt webbing from the retractor to pass it through the belt path of the child restraint. Do not twist the belt webbing in the belt path.
3. Slide the latch plate into the buckle until you hear a "click."
4. Pull on the webbing to make the lap portion tight against the child seat.
5. To lock the seat belt, pull down on the shoulder part of the belt until you have pulled all the seat belt webbing out of the retractor. Then, allow the webbing to retract back into the retractor. As the webbing retracts, you will hear a clicking sound. This means the seat belt is now in the Automatic Locking mode.
6. Try to pull the webbing out of the retractor. If it is locked, you should not be able to pull out any webbing. If the retractor is not locked, repeat step 5.
7. Finally, pull up on any excess webbing to tighten the lap portion around the child restraint while you push the child restraint rearward and downward into the vehicle seat.
8. If the child restraint has a top tether strap and the seating position has a top tether anchorage, connect the tether strap to the anchorage and tighten the tether strap. See the section "Installing Child Restraints Using the Top Tether Anchorage" for directions to attach a tether anchor.

9. Test that the child restraint is installed tightly by pulling back and forth on the child seat at the belt path. It should not move more than 1 inch (25.4 mm) in any direction.

Any seat belt system will loosen with time, so check the belt occasionally, and pull it tight if necessary.

Seat Belt Park Stitch — If Equipped

The rear outboard seat belts may be equipped with a park stitch to raise the latch plate for easier access to occupants. If the park stitch interferes with the tight installation of a child restraint, slide the latch plate over the stitching to shorten the lap portion of the belt and install the car seat following the steps above. When the car seat is removed from the vehicle, slide the latch plate above the park stitch to enable occupants to latch the seatbelt securely.

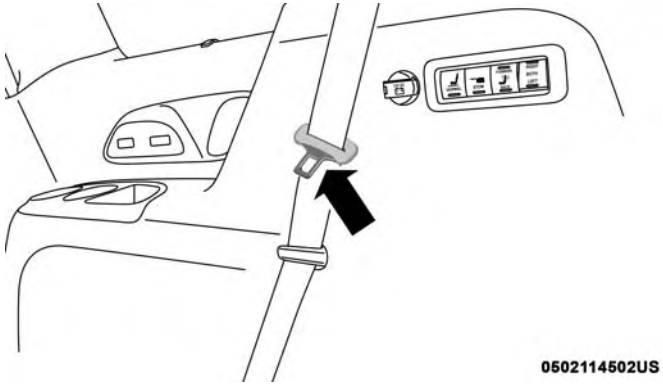

Seat Belt Park Stitch Location

If the park stitch interferes with the lock-off features of the child restraint, do not use the lock-off feature. Instead, switch the seat belt to the locking mode, as described in the steps above or move the car seat to a different seating position.

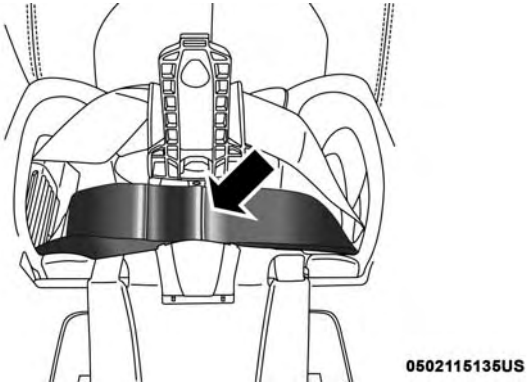

Seat Belt Park Stitch

Installing Child Restraints Using the Top Tether Anchorage

WARNING!

Do not attach a tether strap for a rear-facing car seat to any location in front of the car seat, including the seat frame or a tether anchorage. Only attach the tether strap of a rear-facing car seat to the tether anchorage that is approved for that seating position, located behind the top of the vehicle seat. See the section

(Continued)

WARNING! *(Continued)*

"Lower Anchors and Tethers for CHildren (LATCH) Restraint System" for the location of approved tether anchorages in your vehicle.

1. Look behind the seating position where you plan to install the child restraint to find the tether anchorage. You may need to move the seat forward to provide better access to the tether anchorage. If there is no top tether anchorage for that seating position, move the child restraint to another position in the vehicle if one is available.

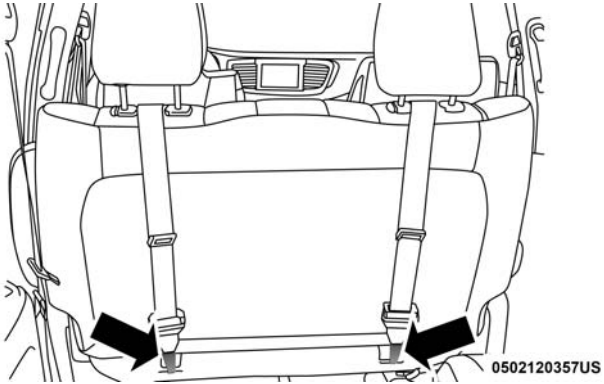

Top Tether Anchorage Locations 2nd Row Bench

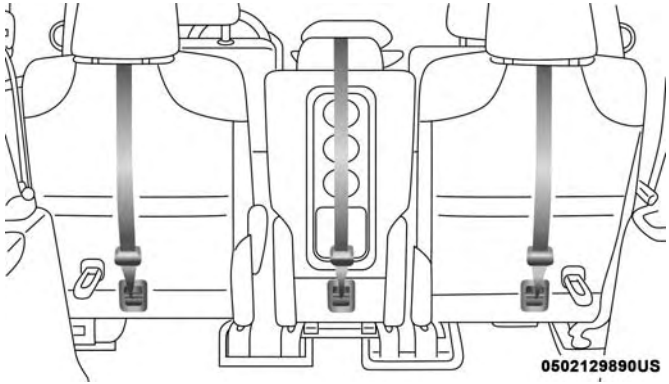

Top Tether Anchorage Locations 2nd Row 8 Passenger

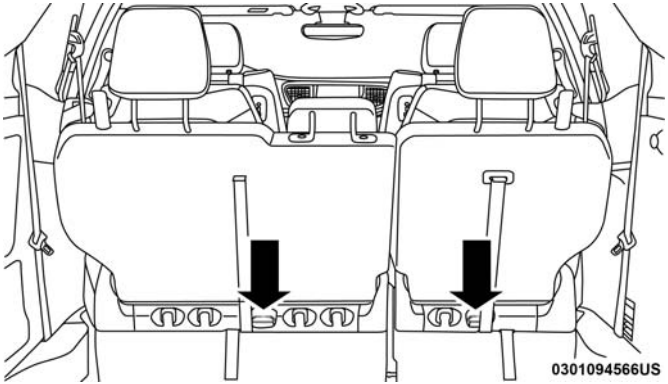

Top Tether Anchorage Locations 3rd Row

2. Route the tether strap to provide the most direct path for the strap between the anchor and the child seat. If your vehicle is equipped with adjustable rear head restraints, raise the head restraint, and where possible, route the tether strap under the head restraint and between the two posts. If not possible, lower the head restraint and pass the tether strap around the outboard side of the head restraint.

3. Attach the tether strap hook of the child restraint to the top tether anchorage as shown in the diagram.

4. Remove slack in the tether strap according to the child restraint manufacturer's instructions.

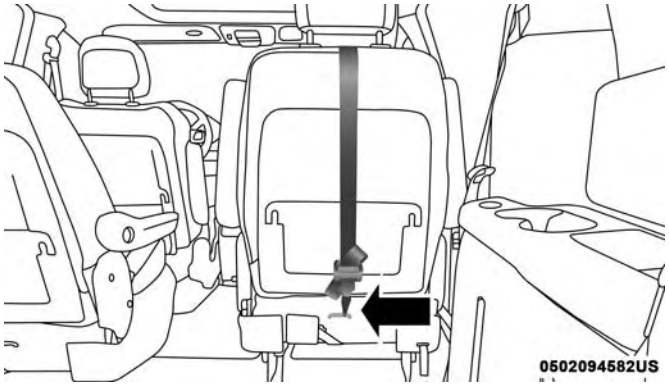

Rear Seat Tether Strap Attachment (Second Row 7 Passenger Stow n' Go Anchorage Shown)

WARNING!

- **An incorrectly anchored tether strap could lead to increased head motion and possible injury to the child. Use only the anchorage position directly behind the child seat to secure a child restraint top tether strap.**

(Continued)

WARNING! *(Continued)*

- **If your vehicle is equipped with a split rear seat, make sure the tether strap does not slip into the opening between the seatbacks as you remove slack in the strap.**

Third Row Tether Attachment

The tether anchorage found on the back of the 60% seat in the third row may be used by either the left outboard or the center seating position. Only tether one child restraint to the tether anchorage at a time.

To connect the tether strap hook to the tether anchorage for either seating position on the 60% third row seat:

1. Route the tether strap to provide the most direct path for the strap between the anchor and the child seat.
2. If the car seat is in the center, raise the center head restraint and route the tether strap around the inboard (left) side of the head restraint support posts, as shown in the diagram.
3. Attach the tether strap hook of the child restraint to the top tether anchorage as shown in the diagram.
4. Remove slack in the tether strap according to the child restraint manufacturer's instructions.

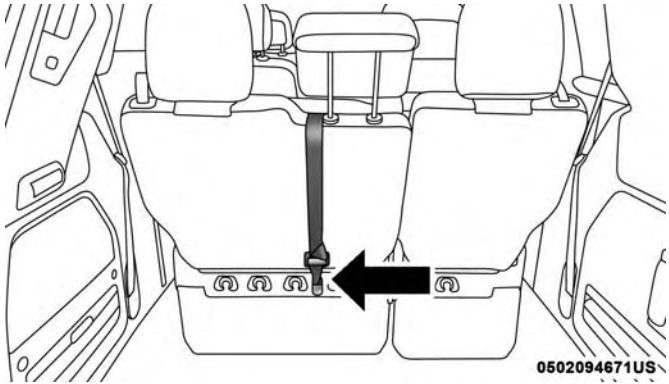

Center Tether Attachment – 3rd Row

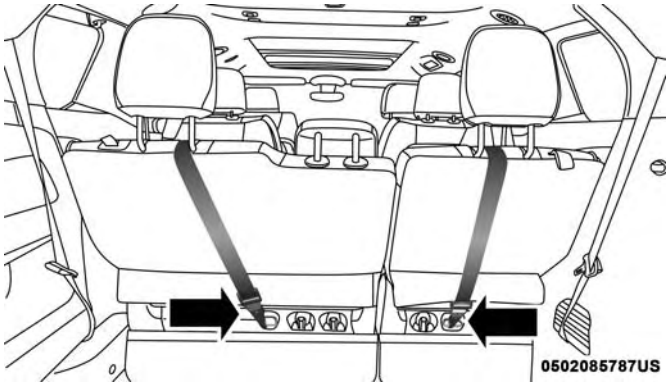

Outboard Tether Attachments – 3rd Row

WARNING!

Do not connect the tether strap for more than one child restraint to the tether anchorage on the 60% seat in the third row. This anchorage is intended for one child restraint at a time.

Transporting Pets

Air **Bags deploying in the front seat could harm your pet. An unrestrained pet will be thrown about and possibly injured, or injure a passenger during panic braking or in a collision.**

Pets should be restrained in the rear seat (if equipped) in pet harnesses or pet carriers that are secured by seat belts.

SAFETY TIPS

Transporting Passengers

NEVER TRANSPORT PASSENGERS IN THE CARGO AREA.

WARNING!

- **Do not leave children or animals inside parked vehicles in hot weather. Interior heat build-up may cause serious injury or death.**
- **It is extremely dangerous to ride in a cargo area, inside or outside of a vehicle. In a collision, people riding in these areas are more likely to be seriously injured or killed.**
- **Do not allow people to ride in any area of your vehicle that is not equipped with seats and seat belts.**

(Continued)

WARNING! *(Continued)*

- **Be sure everyone in your vehicle is in a seat and using a seat belt properly.**

Exhaust Gas

WARNING!

Exhaust gases can injure or kill. They contain carbon monoxide (CO), which is colorless and odorless. Breathing it can make you unconscious and can eventually poison you. To avoid breathing (CO), follow these safety tips:

- **Do not run the engine in a closed garage or in confined areas any longer than needed to move your vehicle in or out of the area.**
- **If you are required to drive with the trunk/liftgate/rear doors open, make sure that all windows are closed and the climate control BLOWER switch is set at high speed. DO NOT use the recirculation mode.**
- **If it is necessary to sit in a parked vehicle with the engine running, adjust your heating or cooling controls to force outside air into the vehicle. Set the blower at high speed.**

The best protection against carbon monoxide entry into the vehicle body is a properly maintained engine exhaust system.

Whenever a change is noticed in the sound of the exhaust system, when exhaust fumes can be detected inside the vehicle, or when the underside or rear of the vehicle is damaged, have a competent mechanic inspect the complete exhaust system and adjacent body areas for broken, damaged, deteriorated, or mispositioned parts. Open seams or loose connections could permit exhaust fumes to seep into the passenger compartment. In addition, inspect the exhaust system each time the vehicle is raised for lubrication or oil change. Replace as required.

Safety Checks You Should Make Inside The Vehicle

Seat Belts

Inspect the seat belt system periodically, checking for cuts, frays, and loose parts. Damaged parts must be replaced immediately. Do not disassemble or modify the system.

Front seat belt assemblies must be replaced after a collision. Rear seat belt assemblies must be replaced after a collision if they have been damaged (i.e., bent retractor, torn webbing, etc.). If there is any question regarding seat belt or retractor condition, replace the seat belt.

Air Bag Warning Light

The Air Bag warning light will turn on for four to eight seconds as a bulb check when the ignition switch is first turned to ON/RUN. If the light is either not on during starting, stays on, or turns on while driving, have the system inspected at an authorized dealer as soon as possible. After the bulb check, this light will illuminate with a single chime when a fault with the Air Bag System has been detected. It will stay on until the fault is removed. If the light comes on intermittently or remains on while driving, have an authorized dealer service the vehicle immediately.

Refer to "Occupant Restraint Systems" in "Safety" for further information.

Defroster

Check operation by selecting the defrost mode and place the blower control on high speed. You should be able to feel the air directed against the windshield. See an authorized dealer for service if your defroster is inoperable.

Floor Mat Safety Information

Always use floor mats designed to fit your vehicle. Only use a floor mat that does not interfere with the operation of the accelerator, brake or clutch pedals. Only use a floor mat that is securely attached using the floor mat fasteners so it cannot slip out of position and interfere with the accelerator, brake or clutch pedals or impair safe operation of your vehicle in other ways.

WARNING!

An improperly attached, damaged, folded, or stacked floor mat, or damaged floor mat fasteners may cause your floor mat to interfere with the accelerator, brake, or clutch pedals and cause a loss of vehicle control. To prevent SERIOUS INJURY or DEATH:

- **ALWAYS securely attach your floor mat using the floor mat fasteners. DO NOT install your floor mat upside down or turn your floor mat over. Lightly pull to confirm mat is secured using the floor mat fasteners on a regular basis.**
- **ALWAYS REMOVE THE EXISTING FLOOR MAT FROM THE VEHICLE before installing any other floor mat. NEVER install or stack an additional floor mat on top of an existing floor mat.**
- **ONLY install floor mats designed to fit your vehicle. NEVER install a floor mat that cannot be properly attached and secured to your vehicle. If a floor mat**

(Continued)

WARNING! *(Continued)*

needs to be replaced, only use a FCA approved floor mat for the specific make, model, and year of your vehicle.

- ONLY use the driver's side floor mat on the driver's side floor area. To check for interference, with the vehicle properly parked with the engine off, fully depress the accelerator, the brake, and the clutch pedal (if present) to check for interference. If your floor mat interferes with the operation of any pedal, or is not secure to the floor, remove the floor mat from the vehicle and place the floor mat in your trunk.
- ONLY use the passenger's side floor mat on the passenger's side floor area.
- ALWAYS make sure objects cannot fall or slide into the driver's side floor area when the vehicle is

(Continued)

WARNING! *(Continued)*

moving. Objects can become trapped under accelerator, brake, or clutch pedals and could cause a loss of vehicle control.

- NEVER place any objects under the floor mat (e.g., towels, keys, etc.). These objects could change the position of the floor mat and may cause interference with the accelerator, brake, or clutch pedals.
- If the vehicle carpet has been removed and re-installed, always properly attach carpet to the floor and check the floor mat fasteners are secure to the vehicle carpet. Fully depress each pedal to check for interference with the accelerator, brake, or clutch pedals then re-install the floor mats.
- It is recommended to only use mild soap and water to clean your floor mats. After cleaning, always check your floor mat has been properly installed and is secured to your vehicle using the floor mat fasteners by lightly pulling mat.

Periodic Safety Checks You Should Make Outside The Vehicle

Tires

Examine tires for excessive tread wear and uneven wear patterns. Check for stones, nails, glass, or other objects lodged in the tread or sidewall. Inspect the tread for cuts and cracks. Inspect sidewalls for cuts, cracks, and bulges. Check the wheel nuts for tightness. Check the tires (including spare) for proper cold inflation pressure.

Lights

Have someone observe the operation of brake lights and exterior lights while you work the controls. Check turn signal and high beam indicator lights on the instrument panel.

Door Latches

Check for proper closing, latching, and locking.

Fluid Leaks

Check area under the vehicle after overnight parking for fuel, coolant, oil, or other fluid leaks. Also, if gasoline fumes are detected or if fuel, or brake fluid leaks are suspected. The cause should be located and corrected immediately.

STARTING AND OPERATING

CONTENTS

■ STARTING THE ENGINE 321
- □ Normal Starting 321
- □ Cold Weather Operation (Below –22°F Or –30°C) 326
- □ After Starting — Warming Up The Engine 326
- □ If Engine Fails To Start 326
- □ To Turn Off The Engine Using ENGINE START/STOP Button 326

■ ENGINE BLOCK HEATER — IF EQUIPPED 327

■ ENGINE BREAK-IN RECOMMENDATIONS 328

■ PARK BRAKE 328
- □ Electric Park Brake (EPB) 328

■ AUTOMATIC TRANSMISSION 333
- □ Ignition Park Interlock 334
- □ Brake/Transmission Shift Interlock System 334
- □ Nine-Speed Automatic Transmission 335
- □ Gear Ranges 336

■ ACTIVE NOISE CANCELLATION 341

■ POWER STEERING 341

■ STOP/START SYSTEM — IF EQUIPPED. 342
- □ Auto Stop/Start 342
- □ Possible Reasons The Engine Does Not Autostop 343
- □ To Start The Engine While In Auto Stop/Start. . .344
- □ To Manually Turn Off The Stop/Start System . . .344
- □ To Manually Turn On The Stop/Start System . . .345
- □ System Malfunction 345

■ SPEED CONTROL — IF EQUIPPED 346
- □ To Activate 346

- To Set A Desired Speed 347
- To Vary The Speed Setting 347
- To Accelerate For Passing 348
- To Resume Speed 348
- To Deactivate 348

■ ADAPTIVE CRUISE CONTROL (ACC) — IF EQUIPPED 348

- Adaptive Cruise Control (ACC) Operation 350
- Activating Adaptive Cruise Control (ACC) 351
- To Activate/Deactivate 351
- To Set A Desired ACC Speed 352
- To Cancel 352
- To Turn Off 353
- To Resume 353
- To Vary The Speed Setting 353
- Setting The Following Distance In ACC 355
- Overtake Aid 358
- ACC Operation At Stop 358
- Adaptive Cruise Control (ACC) Menu 359
- Display Warnings And Maintenance 360
- Precautions While Driving With ACC. 362
- General Information 365
- Normal (Fixed Speed) Cruise Control Mode 365

■ PARKSENSE REAR PARK ASSIST — IF EQUIPPED 368

- ParkSense Sensors 370
- ParkSense Visual Alert 370
- ParkSense Display 370
- Enabling And Disabling ParkSense 375
- Service The ParkSense Rear Park Assist System. .375
- Cleaning The ParkSense System. 376
- ParkSense System Usage Precautions 376

■ PARKSENSE FRONT AND REAR PARK ASSIST — IF EQUIPPED 378

- ParkSense Sensors 379

- ParkSense Visual Alert 380
- ParkSense Display 380
- Enabling And Disabling ParkSense 389
- Service The ParkSense Park Assist System 389
- Cleaning The ParkSense System. 390
- ParkSense System Usage Precautions 390

■ PARKSENSE ACTIVE PARK ASSIST SYSTEM — IF EQUIPPED 392
- Enabling And Disabling The ParkSense Active Park Assist System 393
- Parallel Parking Space Assistance Operation/Display 394
- Perpendicular Parking Space Assistance Operation/Display 403

■ LANESENSE — IF EQUIPPED 412
- LaneSense Operation 412
- Turning LaneSense On Or Off 413
- LaneSense Warning Message 414
- Changing LaneSense Status. 416

■ PARKVIEW REAR BACK UP CAMERA 416

■ SURROUND VIEW CAMERA SYSTEM — IF EQUIPPED 419

■ REFUELING THE VEHICLE 422

■ VEHICLE LOADING 424
- Certification Label 424

■ TRAILER TOWING 426
- Common Towing Definitions. 426
- Trailer Hitch Classification 428
- Trailer Towing Weights (Maximum Trailer Weight Ratings) 429
- Vehicle Loading Chart 430
- Trailer And Tongue Weight 432
- Towing Requirements 432
- Towing Tips 436

■ RECREATIONAL TOWING (BEHIND MOTORHOME, ETC.) 437
- Towing This Vehicle Behind Another Vehicle. . . .437
- Recreational Towing — All Models 438

■ DRIVING TIPS 438
- Driving On Slippery Surfaces 438
- Driving Through Water 439

STARTING THE ENGINE

Before starting your vehicle, adjust your seat, adjust both inside and outside mirrors, and fasten your seat belts.

WARNING!

- **When exiting the vehicle, always remove the key fob from the vehicle and lock your vehicle.**
- **Never leave children alone in a vehicle, or with access to an unlocked vehicle.**
- **Allowing children to be in a vehicle unattended is dangerous for a number of reasons. A child or others could be seriously or fatally injured. Children should be warned not to touch the parking brake, brake pedal or the transmission gear selector.**
- **Do not leave the key fob in or near the vehicle, or in a location accessible to children, and do not leave the ignition of a vehicle equipped with Keyless Enter-N-Go in the ACC or ON/RUN mode. A child could operate power windows, other controls, or move the vehicle.**
- **Do not leave children or animals inside parked vehicles in hot weather. Interior heat build-up may cause serious injury or death.**

Start the engine with the gear selector in the NEUTRAL or PARK position. Apply the brake before shifting to any driving range.

Normal Starting

NOTE: Normal starting of either a cold or a warm engine is obtained without pumping or pressing the accelerator pedal.

To Turn On The Engine Using ENGINE START/STOP Button

1. The transmission must be in PARK or NEUTRAL.
2. Press and hold the brake pedal while pushing the ENGINE START/STOP button once.
3. The system takes over and attempts to start the vehicle. If the vehicle fails to start, the starter will disengage automatically after 10 seconds.
4. If you wish to stop the cranking of the engine prior to the engine starting, push the button again.

ENGINE START/STOP Button Functions — With Driver's Foot OFF The Brake Pedal (In PARK Or NEUTRAL Position)

The ENGINE START/STOP button operates similar to an ignition switch. It has three positions, OFF, ACC, and RUN. To change the ignition positions without starting the vehicle and use the accessories follow these steps:

- Starting with the ignition in the OFF position,
- Push the ENGINE START/STOP button once to place the ignition to the ACC position (instrument cluster will display "ACC"),
- Push the ENGINE START/STOP button a second time to place the ignition to the RUN position (instrument cluster will display "ON/RUN"),
- Push the ENGINE START/STOP button a third time to return the ignition to the OFF position (instrument cluster will display "OFF").

NOTE: Only press one pedal at a time while driving the vehicle. Torque performance of the vehicle could be reduced if both pedals are pressed at the same time. If pressure is detected on both pedals simultaneously, a warning message will display in the instrument cluster. For further information, refer to "Instrument Cluster Display" in "Getting To Know Your Instrument Panel".

AutoPark

AutoPark is a supplemental feature to assist in placing the vehicle in PARK should the situations on the following pages occur. It is a back up system and should not be relied upon as the primary method by which the driver shifts the vehicle into PARK.

The conditions under which AutoPark will engage are outlined on the following pages.

WARNING!

- **Driver inattention could lead to failure to place the vehicle in PARK. ALWAYS DO A VISUAL CHECK that your vehicle is in PARK by verifying that a solid (not blinking) "P" is indicated in the instrument cluster display and near the gear selector. If the "P" indicator is blinking, your vehicle is not in PARK. As an added precaution, always apply the parking brake when exiting the vehicle.**
- **AutoPark is a supplemental feature. It is not designed to replace the need to shift your vehicle into PARK. It is a back up system and should not be relied upon as the primary method by which the driver shifts the vehicle into PARK.**

ALWAYS DO A VISUAL CHECK that your vehicle is in PARK by looking for the "P" in the Instrument Cluster Display and on the shifter. As an added precaution, always apply the parking brake.

If the vehicle is not in PARK and the driver attempts to turn off the engine, if certain conditions are met, the vehicle will AutoPark, automatically shifting the vehicle's transmission to the PARK position. The rotary shifter will automatically reset itself to the PARK position. The vehicle's ignition will then move to the OFF position (Engine OFF). When AutoPark is activated the instrument cluster will display the message "AutoPark Engaged"

AutoPark will engage when all of these conditions are met:

- Vehicle is equipped with a rotary selector
- Vehicle is not in PARK
- Vehicle Speed is 1.2 MPH (1.9 km/h) or less
- Driver has pushed the ENGINE START/STOP BUTTON

If the vehicle is not in PARK and the driver exits the vehicle with the engine running, if certain conditions are met, the vehicle will AutoPark, automatically shifting the vehicle's transmission to the PARK position. The Electric Park Brake SAFE HOLD feature will also activate in some conditions. Please reference SAFE HOLD pages for additional information regarding this function.

CAUTION!
Engine will remain running.

AutoPark will engage when all of these conditions are met:

- Vehicle is equipped with a rotary selector
- Vehicle is not in PARK
- Vehicle speed is 1.2 MPH (1.9 km/h) or less
- Driver's door is ajar
- Driver's seat belt is unbuckled
- Brake Pedal is not depressed

The MESSAGE " **AutoPark Engaged**"will display in the instrument cluster.

AutoPark In Stop/Start Autostop Mode

- AutoPark will engage when all of these conditions are met:
- Vehicle is equipped with a rotary shifter

- Vehicle is not in PARK
- Vehicle speed is 1.2 MPH (1.9 km/h) or less
- Driver's door is ajar
- Driver's seat belt is unbuckled or Brake Pedal is not depressed

The MESSAGE " **AutoPark Engaged**"will display in the instrument cluster.

WARNING!

- **Never use the PARK position as a substitute for the parking brake. Always apply the parking brake fully when exiting the vehicle to guard against vehicle movement and possible injury or damage.**
- **Your vehicle could move and injure you and others if it is not in PARK. Check by trying to move the transmission gear selector out of PARK with the brake pedal released. Make sure the transmission is in PARK before exiting the vehicle.**
- **The transmission may not engage PARK if the vehicle is moving. Always bring the vehicle to a complete stop before shifting to PARK, and verify that the transmission gear position indicator solidly**

(Continued)

WARNING! ***(Continued)***

indicates PARK (P) without blinking. Ensure that the vehicle is completely stopped, and the PARK position is properly indicated, before exiting the vehicle.

- **It is dangerous to shift out of PARK or NEUTRAL if the engine speed is higher than idle speed. If your foot is not firmly pressing the brake pedal, the vehicle could accelerate quickly forward or in reverse. You could lose control of the vehicle and hit someone or something. Only shift into gear when the engine is idling normally and your foot is firmly pressing the brake pedal.**
- **Unintended movement of a vehicle could injure those in or near the vehicle. As with all vehicles, you should never exit a vehicle while the engine is running. Before exiting a vehicle, always come to a complete stop, then apply the parking brake, shift the transmission into PARK, and turn the ignition OFF. When the ignition is in the OFF mode, the transmission is locked in PARK, securing the vehicle against unwanted movement.**

(Continued)

WARNING! *(Continued)*

- **When exiting the vehicle, always make sure the ignition is in the OFF mode, remove the key fob from the vehicle, and lock the vehicle.**
- **Never leave children alone in a vehicle, or with access to an unlocked vehicle. Allowing children to be in a vehicle unattended is dangerous for a number of reasons. A child or others could be seriously or fatally injured. Children should be warned not to touch the parking brake, brake pedal or the transmission gear selector.**
- **Do not leave the key fob in or near the vehicle (or in a location accessible to children), and do not leave the ignition in the ACC or ON/RUN mode. A child could operate power windows, other controls, or move the vehicle.**

CAUTION!

Damage to the transmission may occur if the following precautions are not observed:

- **Shift into or out of PARK or REVERSE only after the vehicle has come to a complete stop.**

(Continued)

CAUTION! *(Continued)*

- **Do not shift between PARK, REVERSE, NEUTRAL, or DRIVE when the engine is above idle speed.**
- **Before shifting into any gear, make sure your foot is firmly pressing the brake pedal.**

To Turn On The Engine Using ENGINE START/STOP Button

1. The transmission must be in PARK or NEUTRAL.
2. Press and hold the brake pedal while pushing the ENGINE START/STOP button once.

To release the parking brake manually, the ignition switch must be in the ON/RUN position. Press on the brake pedal, then push the park brake switch momentarily.

If the driver shifts into PARK while moving, the vehicle may Park.

Park will engage **ONLY** when vehicle speed is 1.2 MPH (1.9 km/h) or less.

The MESSAGE " **Vehicle Speed is Too High to Shift to P**" will display in the Instrument Cluster Display if vehicle speed is above 1.2 MPH (1.9 km/h). The gear position

indicator will blink continuously until the selector is returned to the proper position, or the requested shift can be completed.

WARNING!

If vehicle speed is not below 1.2 MPH (1.9 km/h) when the driver shifts into PARK, the transmission will default to NEUTRAL until the vehicle speed drops below 1.2 MPH (1.9 km/h) and the above condition are met, enabling AutoPark. A vehicle left in the NEUTRAL position can roll. As an added precaution, always apply the parking brake when exiting the vehicle.

Cold Weather Operation (Below –22°F Or −30°C)

To ensure reliable starting at these temperatures, use of an externally powered electric engine block heater (available from your authorized dealer) is recommended.

After Starting — Warming Up The Engine

The idle speed is controlled automatically and it will decrease as the engine warms up.

If Engine Fails To Start

WARNING!

- **Never pour fuel or other flammable liquid into the throttle body air inlet opening in an attempt to start the vehicle. This could result in flash fire causing serious personal injury.**
- **Do not attempt to push or tow your vehicle to get it started. Vehicles equipped with an automatic transmission cannot be started this way. Unburned fuel could enter the catalytic converter and once the engine has started, ignite and damage the converter and vehicle.**
- **If the vehicle has a discharged battery, booster cables may be used to obtain a start from a booster battery or the battery in another vehicle. This type of start can be dangerous if done improperly. Refer to "Jump Starting Procedure" in "In Case Of Emergency" for further information.**

To Turn Off The Engine Using ENGINE START/STOP Button

1. Place the gear selector in PARK, then push and release the ENGINE START/STOP button.

2. The ignition switch will return to the OFF position.
3. If the gear selector is not in PARK, the ENGINE START/STOP button must be held for two seconds or three short pushes in a row with the vehicle speed above 5 mph (8 km/h) before the engine will shut off. The ignition switch position will remain in the ACC position until the gear selector is in PARK and the button is pushed twice to the OFF position. If the gear selector is not in PARK and the ENGINE START/STOP button is pushed once, the instrument cluster will display a "Vehicle Not In Park" message and the engine will remain running. Never leave a vehicle out of the PARK position, or it could roll.

NOTE: If the ignition switch is left in the ACC or RUN (engine not running) position and the transmission is in PARK, the system will automatically time out after 30 minutes of inactivity and the ignition will switch to the OFF position.

ENGINE BLOCK HEATER — IF EQUIPPED

The engine block heater warms the engine and permits quicker starts in cold weather.

Connect the cord to a 110-115 Volt AC electrical outlet with a grounded, three-wire extension cord.

For ambient temperatures below 0°F (-18°C), the engine block heater is recommended. For ambient temperatures below -20°F (-29°C), the engine block heater is required.

The engine block heater cord is routed under the hood, behind to the passenger's side headlamp. Follow the steps below to properly use the engine block heater:

1. Locate the engine block heater cord (behind the passenger's side headlamp).
2. Undo the hook-and-loop strap that secures the heater cord in place.
3. Pull the cord to the front of the vehicle and plug it into a grounded, three-wire extension cord.
4. After the vehicle is running, reattach the cord to the hook-and-loop strap and properly stow away behind the passenger's side headlamp.

NOTE:

- The engine block heater cord is a factory installed option. If your vehicle is not equipped, heater cords are available from your authorized Mopar dealer.
- The engine block heater will require 110 Volts AC and 6.5 Amps to activate the heater element.

- The engine block heater must be plugged in at least one hour to have an adequate warming effect on the engine.

WARNING!

Remember to disconnect the engine block heater cord before driving. Damage to the 110-115 Volt electrical cord could cause electrocution.

ENGINE BREAK-IN RECOMMENDATIONS

A long break-in period is not required for the engine and drivetrain (transmission and axle) in your vehicle.

Drive moderately during the first 300 miles (500 km). After the initial 60 miles (100 km), speeds up to 50 or 55 mph (80 or 90 km/h) are desirable.

While cruising, brief full-throttle acceleration within the limits of local traffic laws contributes to a good break-in. Wide-open throttle acceleration in low gear can be detrimental and should be avoided.

The engine oil installed in the engine at the factory is a high-quality energy conserving type lubricant. Oil changes should be consistent with anticipated climate conditions under which vehicle operations will occur. For the recommended viscosity and quality grades, refer to “Dealer Service” in “Servicing And Maintenance”.

CAUTION!

Never use Non-Detergent Oil or Straight Mineral Oil in the engine or damage may result.

NOTE: A new engine may consume some oil during its first few thousand miles (kilometers) of operation. This should be considered a normal part of the break-in and not interpreted as a problem.

PARK BRAKE

Electric Park Brake (EPB)

Your vehicle is equipped with an Electric Park Brake System (EPB) that offers simple operation, and some additional features that make the park brake more convenient and useful.

The park brake is primarily intended to prevent the vehicle from rolling while parked. Before leaving the vehicle, make sure that the park brake is applied. Also, be certain to leave the transmission in PARK.

You can engage the park brake in two ways;

- Manually, by applying the park brake switch.
- Automatically, by enabling the Auto Park Brake feature in the customer programmable features section of the Uconnect Settings.

The park brake switch is located in the integrated center stack.

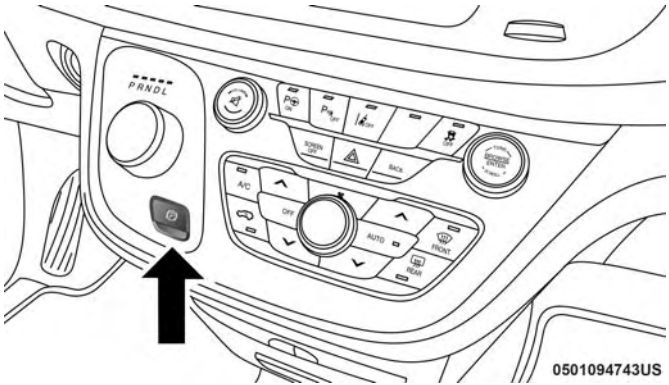

Electric Park Brake Switch

To apply the park brake manually, push the switch momentarily. You may hear a slight whirring sound from the back of the vehicle while the park brake engages. Once the park brake is fully engaged, the BRAKE warning lamp in the instrument cluster and an indicator on the switch will illuminate. If your foot is on the brake pedal while you apply the park brake, you may notice a small amount of brake pedal movement. The park brake can be applied even when the ignition switch is OFF, however, it can only be released when the ignition switch in the ACC or ON/RUN position.

NOTE: The EPB fault lamp will illuminate if the EPB switch is held for longer than 180 seconds. The light will extinguish upon releasing the switch.

If the Auto Park Brake feature is enabled, the parking brake will automatically engage whenever the transmission is placed into PARK. Once the park brake is engaged, the BRAKE warning lamp in the instrument cluster and the LED indicator on the switch will illuminate. If your foot is on the brake pedal, you may notice a small amount of brake pedal movement while the parking brake is engaging.

The park brake will release automatically when the ignition is cycled to the ON/RUN position, the transmission is in DRIVE or REVERSE, and the driver seat belt is buckled and an attempt is made to drive the vehicle away by pressing the accelerator pedal.

To release the parking brake manually, the ignition switch must be in the ON/RUN position. Press on the brake pedal, then push the park brake switch momentarily. You may hear a slight whirring sound from the back of the vehicle while the parking brake disengages. You may also notice a small amount of movement in the brake pedal. Once the park brake is fully disengaged, the BRAKE warning lamp in the instrument cluster and the LED indicator on the switch will extinguish.

NOTE: When parking on a hill, it is important to turn the front wheels toward the curb on a downhill grade and away from the curb on an uphill grade. Apply the park brake before placing the gear selector in PARK, otherwise the load on the transmission locking mechanism may make it difficult to move the gear selector out of PARK. The park brake should always be applied whenever the driver is not in the vehicle.

WARNING!

- **Never use the PARK position as a substitute for the parking brake. Always apply the parking brake fully when parked to guard against vehicle movement and possible injury or damage.**

(Continued)

WARNING! ***(Continued)***

- **When exiting the vehicle, always make sure the ignition is in the OFF mode, remove the key fob from the vehicle, and lock your vehicle.**
- **Never leave children alone in a vehicle, or with access to an unlocked vehicle. Allowing children to be in a vehicle unattended is dangerous for a number of reasons. A child or others could be seriously or fatally injured. Children should be warned not to touch the parking brake, brake pedal or the transmission gear selector.**
- **Do not leave the key fob in or near the vehicle, (or in a location accessible to children), and do not leave the ignition in the ACC or ON/RUN mode. A child could operate power windows, other controls, or move the vehicle.**
- **Be sure the parking brake is fully disengaged before driving; failure to do so can lead to brake failure and a collision.**
- **Always fully apply the parking brake when leaving your vehicle, or it may roll and cause damage or injury. Also be certain to leave the transmission in**

(Continued)

WARNING! *(Continued)*

PARK. Failure to do so may allow the vehicle to roll and cause damage or injury.

- **Driving the vehicle with the parking brake engaged, or repeated use of the parking brake to slow the vehicle may cause serious damage to the brake system.**

CAUTION!

If the Brake System Warning Light remains on with the parking brake released, a brake system malfunction is indicated. Have the brake system serviced by an authorized dealer immediately.

If exceptional circumstances should make it necessary to engage the park brake while the vehicle is in motion, push on the electric park brake switch for as long as engagement is desired. The BRAKE warning lamp will illuminate, and a continuous chime will sound. The rear stop lamps will also be illuminated automatically while the vehicle remains in motion.

To disengage the park brake while the vehicle is in motion, release the switch. If the vehicle is brought to a complete stop using the park brake, when the vehicle reaches approximately 3 mph (4.8 km/h), the park brake will remain engaged.

In the unlikely event of a malfunction of the Electric Park Brake system, a yellow EPB fault lamp will illuminate. This may be accompanied by the BRAKE warning lamp flashing. In this case, urgent service of the electric park brake system is required. Do not rely on the park brake to hold the vehicle stationary.

Auto Park Brake

The Electric Park Brake can be programmed to be applied automatically whenever the vehicle is at a standstill and the automatic transmission is placed in PARK. Auto Park Brake is enabled and disabled by customer selection through the “Customer Programmable Features” section of the “Uconnect Settings”.

SafeHold

SafeHold is a safety feature of the Electric Park Brake System that will engage the park brake automatically if the vehicle is left unsecured. If the automatic transmission is not in PARK, the seat belt is unbuckled, the driver door is open, the vehicle is at a standstill, and there is no attempt

to depress the brake pedal or accelerator pedal, the park brake will automatically engage to prevent the vehicle from rolling.

SafeHold can be temporarily bypassed by pushing the Electric Park Brake Switch while the driver door is open and brake pedal is pressed. Once manually bypassed, SafeHold will be enabled again once the vehicle reaches 12 mph (20 km/h) or the ignition is cycled to the OFF position and back to ON again.

Brake Service Mode

We recommend having your brakes serviced by your authorized dealer. You should only make repairs for which you have the knowledge and the right equipment. You should only enter Brake Service Mode during brake service.

When servicing your rear brakes, it may be necessary for you or your technician to push the rear piston into the rear caliper bore. With the Electric Park Brake system, this can only be done after retracting the Electric Park Brake actuator. Fortunately, actuator retraction can be done easily by entering the "Brake Service" through the "Uconnect Settings" in your vehicle. This menu based system will guide you through the steps necessary to retract the EPB actuator in order to perform rear brake service.

Brake Service Mode has requirements that must be met in order to be activated:

- The vehicle must be at a standstill.
- The park brake must be unapplied.
- The transmission must be in PARK or NEUTRAL.

While in service mode, the Electric Park Brake fault lamp will flash continuously while the ignition switch is ON.

When brake service work is complete, the following steps must be followed to reset the parking brake system to normal operation:

- Ensure the vehicle is at a standstill.
- Press the brake pedal with moderate force.
- Apply the Electric Park Brake Switch.

WARNING!

You can be badly injured working on or around a motor vehicle. Do only that service work for which you have the knowledge and the right equipment. If you have any doubt about your ability to perform a service job, take your vehicle to a competent mechanic.

AUTOMATIC TRANSMISSION

WARNING!

- **Never use the PARK position as a substitute for the parking brake. Always apply the parking brake fully when exiting the vehicle to guard against vehicle movement and possible injury or damage.**
- **Your vehicle could move and injure you and others if it is not in PARK. Check by trying to move the transmission gear selector out of PARK with the brake pedal released. Make sure the transmission is in PARK before exiting the vehicle.**
- **The transmission may not engage PARK if the vehicle is moving. Always bring the vehicle to a complete stop before shifting to PARK, and verify that the transmission gear position indicator solidly indicates PARK (P) without blinking. Ensure that the vehicle is completely stopped, and the PARK position is properly indicated, before exiting the vehicle.**
- **It is dangerous to shift out of PARK or NEUTRAL if the engine speed is higher than idle speed. If your foot is not firmly pressing the brake pedal, the**

(Continued)

WARNING! ***(Continued)***

vehicle could accelerate quickly forward or in reverse. You could lose control of the vehicle and hit someone or something. Only shift into gear when the engine is idling normally and your foot is firmly pressing the brake pedal.
- **Unintended movement of a vehicle could injure those in or near the vehicle. As with all vehicles, you should never exit a vehicle while the engine is running. Before exiting a vehicle, always come to a complete stop, then apply the parking brake, shift the transmission into PARK, and turn the ignition OFF. When the ignition is in the OFF mode, the transmission is locked in PARK, securing the vehicle against unwanted movement.**
- **When exiting the vehicle, always make sure the ignition is in the OFF mode, remove the key fob from the vehicle, and lock the vehicle.**
- **Never leave children alone in a vehicle, or with access to an unlocked vehicle. Allowing children to be in a vehicle unattended is dangerous for a number of reasons. A child or others could be seriously or fatally injured. Children should be warned not to**

(Continued)

WARNING! *(Continued)*

touch the parking brake, brake pedal or the transmission gear selector.

- **Do not leave the key fob in or near the vehicle (or in a location accessible to children), and do not leave the ignition in the ACC or ON/RUN mode. A child could operate power windows, other controls, or move the vehicle.**

CAUTION!

Damage to the transmission may occur if the following precautions are not observed:

- **Shift into or out of PARK or REVERSE only after the vehicle has come to a complete stop.**
- **Do not shift between PARK, REVERSE, NEUTRAL, or DRIVE when the engine is above idle speed.**
- **Before shifting into any gear, make sure your foot is firmly pressing the brake pedal.**

NOTE: You must press and hold the brake pedal while shifting out of PARK.

Ignition Park Interlock

This vehicle is equipped with an Ignition Park Interlock which requires the transmission to be in PARK before the ignition can be turned to the OFF mode. This helps the driver avoid inadvertently leaving the vehicle without placing the transmission in PARK. This system also locks the transmission in PARK whenever the ignition is in the OFF mode.

NOTE: The transmission is NOT locked in PARK when the ignition is in the ACC mode (even though the engine will be off). Ensure that the transmission is in PARK, and the ignition is **OFF** (not in ACC mode) before exiting the vehicle.

Brake/Transmission Shift Interlock System

This vehicle is equipped with a Brake Transmission Shift Interlock system (BTSI) that holds the transmission gear selector in PARK unless the brakes are applied. To shift the transmission out of PARK, the engine must be running and the brake pedal must be pressed. The brake pedal must also be pressed to shift from NEUTRAL into DRIVE or REVERSE when the vehicle is stopped or moving at low speeds.

Nine-Speed Automatic Transmission

The transmission is controlled using a rotary electronic gear selector located on the center console. The transmission gear selector has PARK, REVERSE, NEUTRAL, DRIVE, and LOW shift positions. Using the LOW position manually downshifts the transmission to a lower gear based on vehicle speed. The transmission gear range (PRNDL) is displayed both above the gear selector and in the instrument cluster. To select a gear range, simply rotate the gear selector. Push down on the gear selector and then rotate it, to access the L position. You must also press the brake pedal to shift the transmission out of PARK (or NEUTRAL, when stopped or moving at low speeds). To shift past multiple gear ranges at once (such as PARK to DRIVE), simply rotate the gear selector to the appropriate detent. Select the DRIVE range for normal driving.

NOTE: In the event of a mismatch between the gear selector position and the actual transmission gear (for example, driver selects PARK while driving), the position indicator will blink continuously until the selector is returned to the proper position, or the requested shift can be completed.

The electronically-controlled transmission adapts its shift schedule based on driver inputs, along with environmental and road conditions. The transmission electronics are self-calibrating; therefore, the first few shifts on a new vehicle may be somewhat abrupt. This is a normal condition, and precision shifts will develop within a few hundred miles (kilometers).

The nine-speed transmission has been developed to meet the needs of current and future FWD/AWD vehicles. Software and calibration is refined to optimize the customer's driving experience and fuel economy. By design, some vehicle and driveline combinations utilize 9th gear only in very specific driving situations and conditions.

Only shift from DRIVE to PARK or REVERSE when the accelerator pedal is released and the vehicle is stopped. Be sure to keep your foot on the brake pedal when shifting between these gears.

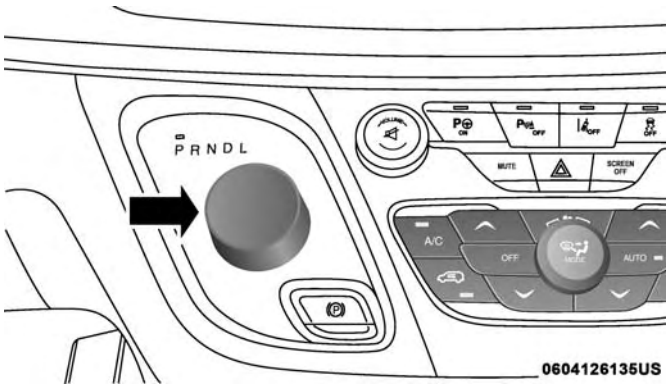

Transmission Gear Selector

Gear Ranges

Do not depress the accelerator pedal when shifting from PARK or NEUTRAL into another gear range.

NOTE: After selecting any gear range, wait a moment to allow the selected gear to engage before accelerating. This is especially important when the engine is cold.

PARK (P)

This range supplements the parking brake by locking the transmission. The engine can be started in this range. Never attempt to use PARK while the vehicle is in motion. Apply the parking brake when exiting the vehicle in this range.

When parking on a level surface, you may shift the transmission into PARK first, and then apply the parking brake.

When parking on a hill, apply the parking brake before shifting the transmission to PARK. As an added precaution, turn the front wheels toward the curb on a downhill grade and away from the curb on an uphill grade.

When exiting the vehicle, always:

- Apply the parking brake.
- Shift the transmission into PARK.
- Turn the ignition OFF.
- Remove the key fob from the vehicle.

WARNING!

- Never use the PARK position as a substitute for the parking brake. Always apply the parking brake fully when exiting the vehicle to guard against vehicle movement and possible injury or damage.
- Your vehicle could move and injure you and others if it is not in PARK. Check by trying to move the transmission gear selector out of PARK with the brake pedal released. Make sure the transmission is in PARK before exiting the vehicle.
- The transmission may not engage PARK if the vehicle is moving. Always bring the vehicle to a complete stop before shifting to PARK, and verify that the transmission gear position indicator solidly indicates PARK (P) without blinking. Ensure that the vehicle is completely stopped, and the PARK position is properly indicated, before exiting the vehicle.
- It is dangerous to shift out of PARK or NEUTRAL if the engine speed is higher than idle speed. If your foot is not firmly pressing the brake pedal, the vehicle could accelerate quickly forward or in reverse. You could lose control of the vehicle and hit someone or something. Only shift into gear when the

(Continued)

WARNING! *(Continued)*

engine is idling normally and your foot is firmly pressing the brake pedal.
- Unintended movement of a vehicle could injure those in or near the vehicle. As with all vehicles, you should never exit a vehicle while the engine is running. Before exiting a vehicle, always come to a complete stop, then apply the parking brake, shift the transmission into PARK, and turn the ignition OFF. When the ignition is in the OFF mode, the transmission is locked in PARK, securing the vehicle against unwanted movement.
- When exiting the vehicle, always make sure the ignition is in the OFF mode, remove the key fob from the vehicle, and lock the vehicle.
- Never leave children alone in a vehicle, or with access to an unlocked vehicle. Allowing children to be in a vehicle unattended is dangerous for a number of reasons. A child or others could be seriously or fatally injured. Children should be warned not to touch the parking brake, brake pedal or the transmission gear selector.

(Continued)

WARNING! *(Continued)*

- **Do not leave the key fob in or near the vehicle (or in a location accessible to children), and do not leave the ignition in the ACC or ON/RUN mode. A child could operate power windows, other controls, or move the vehicle.**

CAUTION!

- **Before moving the transmission gear selector out of PARK, you must start the engine, and also press the brake pedal. Otherwise, damage to the gear selector could result.**
- **DO NOT race the engine when shifting from PARK or NEUTRAL into another gear range, as this can damage the drivetrain.**

The following indicators should be used to ensure that you have properly engaged the transmission into the PARK position:

- Look at the transmission gear position display and verify that it indicates the PARK position (P), and is not blinking.
- With brake pedal released, verify that the gear selector will not move out of PARK.

REVERSE (R)

This range is for moving the vehicle backward. Shift into REVERSE only after the vehicle has come to a complete stop.

NEUTRAL (N)

Use this range when the vehicle is standing for prolonged periods with the engine running. The engine may be started in this range. Apply the park brake and shift the transmission into PARK if you must exit the vehicle.

WARNING!

Do not coast in NEUTRAL and never turn off the ignition to coast down a hill. These are unsafe practices that limit your response to changing traffic or road conditions. You might lose control of the vehicle and have a collision.

CAUTION!

Towing the vehicle, coasting, or driving for any other reason with the transmission in NEUTRAL can cause severe transmission damage.
Refer to "Recreational Towing" in "Starting And Operating" and "Towing A Disabled Vehicle" in "In Case Of Emergency" for further information.

DRIVE (D)

This range should be used for most city and highway driving. It provides the smoothest upshifts and downshifts, and the best fuel economy. The transmission automatically upshifts through all forward gears. The DRIVE position provides optimum driving characteristics under all normal operating conditions.

If the transmission temperature exceeds normal operating limits, the transmission controller may modify the transmission shift schedule, reduce engine torque, and/or expand the range of torque converter clutch engagement. This is done to prevent transmission damage due to overheating.

If the transmission becomes extremely hot, the "Transmission Temperature Warning Light" will illuminate, a warning message will appear in the instrument cluster, and the transmission may operate differently until the transmission cools down.

During cold temperatures, transmission operation may be modified depending on engine and transmission temperature as well as vehicle speed. This feature improves warm up time of the engine and transmission to achieve maximum efficiency. Engagement of the torque converter clutch, and shifts into 8th or 9th gear, are inhibited until the transmission fluid is warm (refer to the "Note" under "Torque Converter Clutch" in this section). Normal operation will resume once the transmission temperature has risen to a suitable level.

LOW (L)

Use this range for engine braking when descending very steep grades. In this range, the transmission will downshift for increased engine braking. To access the LOW position, push down on the gear selector and rotate it fully clockwise.

Transmission Limp Home Mode

Transmission function is monitored electronically for abnormal conditions. If a condition is detected that could result in transmission damage, Transmission Limp Home Mode is activated. In this mode, the transmission may operate only in a fixed gear, or may remain in NEUTRAL. The Malfunction Indicator Light (MIL) may be illuminated. Limp Home Mode may allow the vehicle to be driven to an authorized dealer for service without damaging the transmission.

In the event of a momentary problem, the transmission can be reset to regain all forward gears by performing the following steps:

1. Stop the vehicle.
2. Shift the transmission into PARK, if possible. If not, shift the transmission to NEUTRAL.
3. Push and hold the ignition switch until the engine turns OFF.
4. Wait approximately 30 seconds.
5. Restart the engine.
6. Shift into the desired gear range. If the problem is no longer detected, the transmission will return to normal operation.

NOTE: Even if the transmission can be reset, we recommend that you visit an authorized dealer at your earliest possible convenience. An authorized dealer has diagnostic equipment to assess the condition of your transmission. If the transmission cannot be reset, authorized dealer service is required.

Torque Converter Clutch

A feature designed to improve fuel economy has been included in the automatic transmission on your vehicle. A clutch within the torque converter engages automatically at calibrated speeds. This may result in a slightly different feeling or response during normal operation in the upper gears. When the vehicle speed drops or during some accelerations, the clutch automatically disengages.

NOTE: The torque converter clutch will not engage until the engine and/or transmission is warm (usually after 1 to 3 miles [2 to 5 km] of driving). Because the engine speed is higher when the torque converter clutch is not engaged, it may seem as if the transmission is not shifting properly when the vehicle is cold. This is normal. The torque

converter clutch will function normally once the powertrain is sufficiently warm.

ACTIVE NOISE CANCELLATION

Your vehicle is equipped with an Active Noise Cancellation System. This system is designed to address exhaust and engine noise. The system relies on four microphones embedded in the headliner, which monitor exhaust and engine noise, and assists an onboard frequency generator, which creates counteracting sound waves in the audio system's speakers. This helps keep the vehicle quiet at idle and during drive.

POWER STEERING

The electric power steering system will give you good vehicle response and increased ease of maneuverability in tight spaces. The system will vary its assist to provide light efforts while parking and good feel while driving. If the electric steering system experiences a fault that reduces assist or prevents the vehicle from providing assist, you will still have the ability to steer the vehicle manually.

WARNING!

Continued operation with reduced assist could pose a safety risk to yourself and others. Service should be obtained as soon as possible.

If the Steering icon is displayed and the "POWER STEERING SYSTEM OVER TEMP" message is displayed on the instrument cluster screen, they indicate that extreme steering maneuvers may have occurred which caused an over temperature condition in the power steering system. Once driving conditions are safe, pull over and let the vehicle idle for a few moments until the icon and message turn off. Refer to "Instrument Cluster Display" in "Getting To Know Your Instrument Panel" for further information.

If the "SERVICE POWER STEERING" OR "POWER STEERING ASSIST OFF - SERVICE SYSTEM" message and a steering wheel icon are displayed on the instrument cluster screen, it indicates that the vehicle needs to be taken to the dealer for service. It is likely the vehicle has lost power steering assistance. Refer to "Warning Lights And Messages" in "Getting To Know Your Instrument Panel" for further information.

NOTE:

- Even if the power steering assistance is no longer operational, it is still possible to steer the vehicle. Under these conditions there will be a substantial increase in steering effort, especially at low speeds and during parking maneuvers.
- The power steering system is fully electric; it requires no power steering fluid.
- If the condition persists, see your authorized dealer for service.

STOP/START SYSTEM — IF EQUIPPED

The Stop/Start function is developed to reduce fuel consumption. The system will stop the engine automatically during a vehicle stop if the required conditions are met. Releasing the brake pedal, pressing the accelerator pedal or shifting out of DRIVE (D) will automatically re-start the engine.

This vehicle has been upgraded with a heavy duty starter, enhanced battery, and other upgraded engine parts, to handle the additional engine starts.

Auto Stop/Start

The Stop/Start feature is enabled after every normal customer engine start. At that time, the system will go into STOP/START READY and if all other conditions are met, can go into a STOP/START AUTOSTOP ACTIVE.

To Activate Auto STOP/START, The Following Must Occur:

- The system must be in STOP/START READY state. A STOP/START READY message will be displayed in the instrument cluster within the Stop/Start section. Refer to “Instrument Cluster Display” in “Getting To Know Your Instrument Panel” for further information.
- The vehicle must be completely stopped.
- The shifter must be in a forward gear and the brake pedal depressed.

The engine will shut down, the tachometer will move to the zero position and the Stop/Start telltale will illuminate indicating you are in Autostop. Customer settings will be maintained throughout the Auto Stop/Start process.

Possible Reasons The Engine Does Not Autostop

Prior to engine shut down, the system will check many safety and comfort conditions for Stop/Start and ensure they are fulfilled. Detailed information about the operation of the Stop/Start system may be viewed in the instrument cluster display Stop/Start screen. In the following situations the engine will not stop:

- If Stop/Start is manually disabled by the Stop/Start Off button.
- Driver's seat belt is not buckled.
- Driver's door is not closed.
- Battery temperature is too warm or cold.
- Battery charge is low. During this time a message will display "Stop/Start Not Ready Battery Charging".
- The vehicle is on a steep grade.
- Cabin heating or cooling is in process and an acceptable cabin temperature has not been achieved.
- HVAC is set to full defrost mode at a high blower speed.
- HVAC set to MAX A/C.
- Engine has not reached normal operating temperature.
- The transmission is not in a forward gear.
- Hood is open.
- Brake pedal is not pressed with sufficient pressure.

Other Factors Which Can Inhibit Autostop Include:

- Accelerator pedal input.
- Engine temp too high.
- 5 MPH threshold not achieved from previous AUTOSTOP.
- Steering angle beyond threshold.
- ACC is on and speed is set.

It may be possible for the vehicle to be driven several times without the STOP/START system going into a STOP/START READY state under more extreme conditions of the items listed above.

To Start The Engine While In Auto Stop/Start

While in a forward gear, the engine will start when the brake pedal is released or the throttle pedal is depressed. The transmission will automatically re-engage upon engine restart.

Conditions That Will Cause The Engine To Start Automatically While In Auto Stop/Start:

- The transmission selector is moved out of DRIVE.
- To maintain cabin temperature comfort.
- HVAC is set to full defrost mode.
- HVAC system temperature or fan speed is manually adjusted.
- Battery voltage drops too low. During this time a message will display "Stop/Start Not Ready Battery Charging".
- Low brake vacuum (e.g. after several brake pedal applications).
- STOP/START OFF switch is pushed.
- A STOP/START system error occurs.

To Manually Turn Off The Stop/Start System

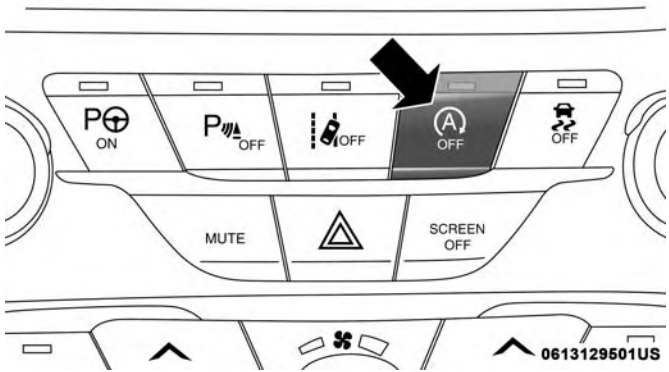

Stop/Start Button

1. Push the STOP/START OFF switch (located on the instrument panel). The light on the switch will illuminate.
2. The "STOP/START OFF" message will appear in the instrument cluster display. Refer to "Instrument Cluster Display" in "Getting To Know Your Instrument Panel" for further information.
3. At the next vehicle stop (after turning off the STOP/START system) the engine will not be stopped.

4. The STOP/START system will reset itself back to an ON condition every time the ignition is turned off and back on.

Automatic Shutdown

This vehicle is equipped with an automatic shutdown feature. If the vehicle is left in READY mode (vehicle running) with the gear selector in PARK for one hour after the driver exits, this feature will automatically turn the vehicle off. Notifications have been added into this feature to raise awareness of the timed event:

- In the interior of the vehicle, the instrument cluster will display "Ready To Drive", and will be accompanied by three audible chimes while exiting. These interior warnings will occur regardless of whether the key fob remains in the vehicle or is removed.
- For the exterior of the vehicle, the horn will sound three times if the fob is removed from the vehicle and the vehicle is in the "READY" mode.

Please consider this feature when intentionally running the vehicle for extended periods of time over one hour. To restart the vehicle, follow the normal vehicle starting process.

NOTE: If the vehicle is left in the ACC or RUN (engine not running) position and the transmission is in PARK, the system will automatically time out (shut down) after an initial 30 minutes of inactivity, followed by the additional amount of time for power accessory delay selected in the radio settings menu. Once the vehicle times out, it will switch to the OFF position.

To Manually Turn On The Stop/Start System

After turning off the STOP/START system, push the STOP/START OFF switch again (located on the instrument panel). The light on the switch will turn off.

System Malfunction

If there is a malfunction in the STOP/START system, the system will not shut down the engine. A "SERVICE STOP/START SYSTEM" message will appear in the instrument cluster display and the Stop/Start telltale will remain yellow. Refer to "Instrument Cluster Display" in "Getting To Know Your Instrument Panel" for further information.

If the "SERVICE STOP/START SYSTEM" message appears in the instrument cluster display, have the system checked by your authorized dealer.

SPEED CONTROL — IF EQUIPPED

When engaged, the Speed Control takes over accelerator operations at speeds greater than 25 mph (40 km/h).

The Speed Control buttons are located on the right side of the steering wheel.

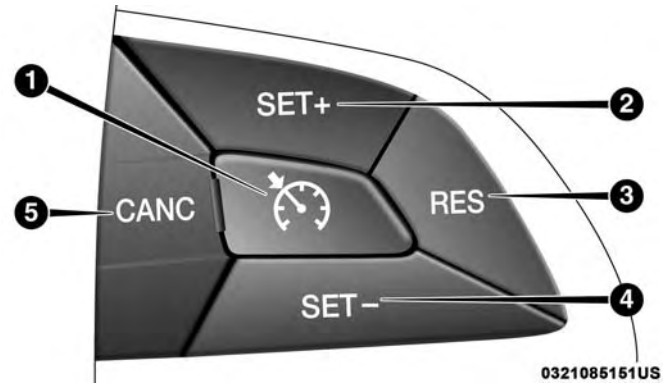

Speed Control Buttons

1 — On/Off
2 — SET (+)/Accel
3 — RES/Resume
4 — SET (-)/Decel
5 — CANC/Cancel

NOTE: In order to ensure proper operation, the Speed Control System has been designed to shut down if multiple Speed Control functions are operated at the same time. If this occurs, the Speed Control System can be reactivated by pushing the Speed Control on/off button and resetting the desired vehicle set speed.

WARNING!

Speed Control can be dangerous where the system cannot maintain a constant speed. Your vehicle could go too fast for the conditions, and you could lose control and have an accident. Do not use Speed Control in heavy traffic or on roads that are winding, icy, snow-covered or slippery.

To Activate

Push the on/off button to activate the Speed Control. The cruise indicator light in the instrument cluster display will illuminate. To turn the system off, push the on/off button a second time. The cruise indicator light will turn off. The system should be turned off when not in use.

WARNING!

Leaving the Speed Control system on when not in use is dangerous. You could accidentally set the system or cause it to go faster than you want. You could lose control and have an accident. Always leave the system off when you are not using it.

To Set A Desired Speed

Turn the Speed Control on.

NOTE: The vehicle should be traveling at a steady speed and on level ground before pushing the SET (+) or SET (-) button.

When the vehicle has reached the desired speed, push the SET (+) or SET (-) button and release. Release the accelerator and the vehicle will operate at the selected speed.

To Vary The Speed Setting

To Increase Speed

When the Speed Control is set, you can increase speed by pushing the SET **(+)** button.

The driver's preferred units can be selected through the instrument panel settings. Refer to "Instrument Cluster Display" in "Getting To Know Your Instrument Panel" for more information. The speed increment shown is dependent on the chosen speed unit of U.S. (mph) or Metric (km/h):

U.S. Speed (mph)

- Pushing the SET **(+)** button once will result in a 1 mph increase in set speed. Each subsequent tap of the button results in an increase of 1 mph.
- If the button is continually pushed, the set speed will continue to increase until the button is released, then the new set speed will be established.

Metric Speed (km/h)

- Pushing the SET **(+)** button once will result in a 1 km/h increase in set speed. Each subsequent tap of the button results in an increase of 1 km/h.
- If the button is continually pushed, the set speed will continue to increase until the button is released, then the new set speed will be established.

To Decrease Speed

When the Speed Control is set, you can decrease speed by pushing the SET **(-)** button.

The driver's preferred units can be selected through the instrument panel settings. Refer to "Instrument Cluster Display" in "Getting To Know Your Instrument Panel" for more information. The speed increment shown is dependent on the chosen speed unit of U.S. (mph) or Metric (km/h):

U.S. Speed (mph)

- Pushing the SET **(-)** button once will result in a 1 mph decrease in set speed. Each subsequent tap of the button results in a decrease of 1 mph.
- If the button is continually pushed, the set speed will continue to decrease until the button is released, then the new set speed will be established.

Metric Speed (km/h)

- Pushing the SET **(-)** button once will result in a 1 km/h decrease in set speed. Each subsequent tap of the button results in a decrease of 1 km/h.
- If the button is continually pushed, the set speed will continue to decrease until the button is released, then the new set speed will be established.

To Accelerate For Passing

Press the accelerator as you would normally. When the pedal is released, the vehicle will return to the set speed.

To Resume Speed

To resume a previously set speed, push the RES button and release. Resume can be used at any speed above 20 mph (32 km/h).

To Deactivate

A soft tap on the brake pedal, pushing the CANC (cancel) button, or normal brake pressure while slowing the vehicle will deactivate the speed control without erasing the set speed from memory.

Pushing the on/off button or cycling the ignition to OFF, erases the set speed from memory.

ADAPTIVE CRUISE CONTROL (ACC) — IF EQUIPPED

Adaptive Cruise Control (ACC) increases the driving convenience provided by cruise control while traveling on highways and major roadways. However, it is not a safety system and not designed to prevent collisions. **Speed Control function performs differently. Please refer to the proper section within this chapter.**

ACC will allow you to keep cruise control engaged in light to moderate traffic conditions without the constant need to reset your cruise control. ACC utilizes a radar sensor and a forward facing camera designed to detect a vehicle directly ahead of you.

NOTE:

- If the sensor does not detect a vehicle ahead of you, ACC will maintain a fixed set speed.
- If the ACC sensor detects a vehicle ahead, ACC will apply limited braking or accelerate (not to exceed the original set speed) automatically to maintain a preset following distance, while matching the speed of the vehicle ahead.

The Cruise Control system has two control modes:

- Adaptive Cruise Control mode for maintaining an appropriate distance between vehicles.
- Normal (Fixed Speed) Cruise Control mode for cruising at a constant preset speed. For additional information, refer to "Normal (Fixed Speed) Cruise Control Mode" in this section.

NOTE: Normal (Fixed Speed) Cruise Control will not react to preceding vehicles. Always be aware of the mode selected.

You can change the mode by using the Cruise Control buttons. The two control modes function differently. Always confirm which mode is selected.

WARNING!

- **Adaptive Cruise Control (ACC) is a convenience system. It is not a substitute for active driving involvement. It is always the driver's responsibility to be attentive of road, traffic, and weather conditions, vehicle speed, distance to the vehicle ahead; and, most importantly, brake operation to ensure safe operation of the vehicle under all road conditions. Your complete attention is always required while driving to maintain safe control of your vehicle. Failure to follow these warnings can result in a collision and death or serious personal injury.**
- **The ACC system:**
  - **Does not react to pedestrians, oncoming vehicles, and stationary objects (e.g., a stopped vehicle in a traffic jam or a disabled vehicle).**

(Continued)

WARNING! *(Continued)*

- **Cannot take street, traffic, and weather conditions into account, and may be limited upon adverse sight distance conditions.**
- **Does not always fully recognize complex driving conditions, which can result in wrong or missing distance warnings.**
- **Will bring the vehicle to a complete stop while following a target vehicle and hold the vehicle for approximately 3 minutes in the stop position. If the target vehicle does not start moving within 3 minutes the parking brake will be activated, and the ACC system will be cancelled.**

You should switch off the ACC system:

- **When driving in fog, heavy rain, heavy snow, sleet, heavy traffic, and complex driving situations (i.e., in highway construction zones).**
- **When entering a turn lane or highway off ramp; when driving on roads that are winding, icy, snow-covered, slippery, or have steep uphill or downhill slopes.**
- **When towing a trailer up or down steep slopes.**
- **When circumstances do not allow safe driving at a constant speed.**

Adaptive Cruise Control (ACC) Operation

The speed control buttons (located on the right side of the steering wheel) operates the ACC system.

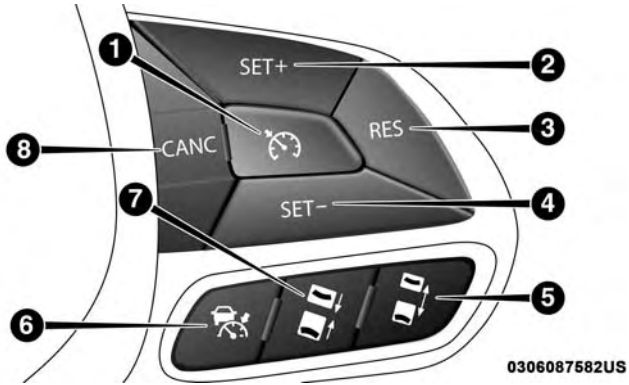

Adaptive Cruise Control Buttons

1 — Normal (Fixed Speed) Cruise Control On/Off
2 — SET (+)/Accel
3 — RES/Resume
4 — SET (-)/Decel
5 — Distance Setting Increase
6 — Adaptive Cruise Control (ACC) On/Off
7 — Distance Setting Decrease
8 — CANC/Cancel

NOTE: Any chassis/suspension or tire size modifications to the vehicle will effect the performance of the Adaptive Cruise Control and Forward Collision Warning System.

Activating Adaptive Cruise Control (ACC)

You can only engage ACC if the vehicle speed is above 0 mph (0 km/h).

The minimum set speed for the ACC system is 20 mph (32 km/h).

When the system is turned on and in the READY state, the instrument cluster displays "ACC Ready."

When the system is OFF, the instrument cluster display "Adaptive Cruise Control (ACC) Off."

NOTE: You cannot engage ACC under the following conditions:

- When you apply the brakes.
- When the parking brake is applied.
- When the automatic transmission is in PARK, REVERSE or NEUTRAL.
- When the vehicle speed is outside of the speed range.
- When the brakes are overheated.
- When the driver door is open at low speed.
- When the driver seat belt is unbuckled at low speed.

To Activate/Deactivate

Push and release the Adaptive Cruise Control (ACC) on/off button. The ACC menu in the instrument cluster displays "ACC Ready."

Adaptive Cruise Control Ready

To turn the system off, push and release the Adaptive Cruise Control (ACC) on/off button again. At this time, the system will turn off and the instrument cluster display will show "Adaptive Cruise Control (ACC) Off."

Adaptive Cruise Control Off

WARNING!

Leaving the Adaptive Cruise Control (ACC) system on when not in use is dangerous. You could accidentally set the system or cause it to go faster than you want. You could lose control and have a collision. Always leave the system off when you are not using it.

To Set A Desired ACC Speed

When the vehicle reaches the speed desired, push the SET **(+)** button or the SET **(-)** button and release. The instrument cluster display will show the set speed.

If the system is set when the vehicle speed is below 20 mph (32 km/h), the set speed shall be defaulted to 20 mph (32 km/h). If the system is set when the vehicle speed is above 20 mph (32 km/h), the set speed shall be the current speed of the vehicle.

NOTE: ACC cannot be set if there is a stationary vehicle in front of your vehicle in close proximity.

Remove your foot from the accelerator pedal, after the ACC has been set. If you do not, the vehicle may continue to accelerate beyond the set speed. If this occurs:

- The message “ACC DRIVER OVERRIDE” will display in the instrument cluster display.
- The system will not be controlling the distance between your vehicle and the vehicle ahead. The vehicle speed will only be determined by the position of the accelerator pedal.

To Cancel

The following conditions cancel the system:

- The brake pedal is applied.
- The CANC (cancel) button is pushed.
- An Anti-Lock Brake System (ABS) event occurs.

- The gear selector is removed from the DRIVE position.
- The Electronic Stability Control/Traction Control System (ESC/TCS) activates.
- The vehicle parking brake is applied.
- Driver seatbelt is unbuckled at low speeds.
- Driver door is opened at low speeds.

To Turn Off

The system will turn off and clear the set speed in memory if:

- The Adaptive Cruise Control (ACC) on/off button is pushed.
- The Normal (Fixed Speed) Cruise Control on/off button is pushed.
- The ignition is turned OFF.

To Resume

If there is a set speed in memory push the RES (resume) button and then remove your foot from the accelerator pedal. The instrument cluster display will display the last set speed.

NOTE:

- If your vehicle stays at standstill for longer than two seconds, then the driver will either have to push the RES (resume) button, or apply the accelerator pedal to reengage the ACC to the existing set speed.
- ACC cannot be resumed if there is a stationary vehicle in-front of your vehicle in close proximity.

WARNING!

The Resume function should only be used if traffic and road conditions permit. Resuming a set speed that is too high or too low for prevailing traffic and road conditions could cause the vehicle to accelerate or decelerate too sharply for safe operation. Failure to follow these warnings can result in a collision and death or serious personal injury.

To Vary The Speed Setting

To Increase Speed

While ACC is set, you can increase the set speed by pushing the SET **(+)** button.

The driver's preferred units can be selected through the instrument cluster. Refer to "Instrument Cluster Display"

in "Getting To Know Your Instrument Panel" for more information. The speed increment shown is dependant on the chosen speed unit of U.S. (mph) or Metric (km/h):

U.S. Speed (mph)

- Pushing the SET **(+)** button once will result in a 1 mph increase in set speed. Each subsequent tap of the button results in an increase of 1 mph.
- If the button is continually pushed, the set speed will continue to increase in 5 mph increments until the button is released. The increase in set speed is reflected in the instrument cluster display.

Metric Speed (km/h)

- Pushing the SET **(+)** button once will result in a 1 km/h increase in set speed. Each subsequent tap of the button results in an increase of 1 km/h.
- If the button is continually pushed, the set speed will continue to increase in 10 km/h increments until the button is released. The increase in set speed is reflected in the instrument cluster display.

To Decrease Speed

While ACC is set, the set speed can be decreased by pushing the SET **(-)** button.

The driver's preferred units can be selected through the instrument cluster. Refer to "Instrument Cluster Display" in "Getting To Know Your Instrument Panel" for more information. The speed decrement shown is dependant on the chosen speed unit of U.S. (mph) or Metric (km/h):

U.S. Speed (mph)

- Pushing the SET **(-)** button once will result in a 1 mph decrease in set speed. Each subsequent tap of the button results in a decrease of 1 mph.
- If the button is continually pushed, the set speed will continue to decrease in 5 mph decrements until the button is released. The decrease in set speed is reflected in the instrument cluster display.

Metric Speed (km/h)

- Pushing the SET **(-)** button once will result in a 1 km/h decrease in set speed. Each subsequent tap of the button results in a decrease of 1 km/h.
- If the button is continually pushed, the set speed will continue to decrease in 10 km/h decrements until the button is released. The decrease in set speed is reflected in the instrument cluster display.

NOTE:

- When you override and push the SET **(+)** button or SET **(-)** buttons, the new set speed will be the current speed of the vehicle.
- When you use the SET **(-)** button to decelerate, if the powertrain braking power does not slow the vehicle sufficiently to reach the set speed, the brake system will automatically slow the vehicle.
- The ACC system decelerates the vehicle to a full stop when following a target vehicle. If an ACC host vehicle follows a target vehicle to a standstill, after two seconds the driver will either have to push the RES (resume) button, or apply the accelerator pedal to reengage the ACC to the existing set speed.
- The ACC system maintains set speed when driving up hill and down hill. However, a slight speed change on moderate hills is normal. In addition, downshifting may occur while climbing uphill or descending downhill. This is normal operation and necessary to maintain set speed. When driving up hill and down hill, the ACC system will cancel if the braking temperature exceeds normal range (overheated).

Setting The Following Distance In ACC

The specified following distance for ACC can be set by varying the distance setting between four bars (longest), three bars (long), two bars (medium) and one bar (short). Using this distance setting and the vehicle speed, ACC calculates and sets the distance to the vehicle ahead. This distance setting displays in the instrument cluster display.

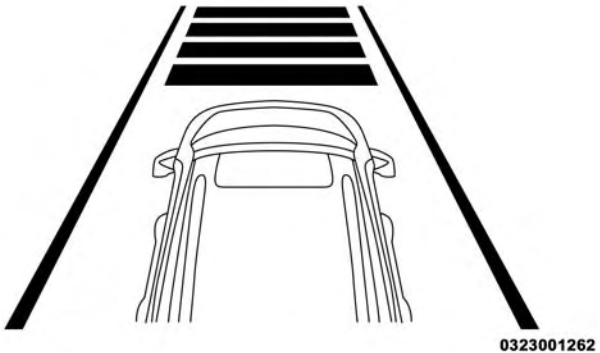

Distance Setting 4 Bars (Longest)

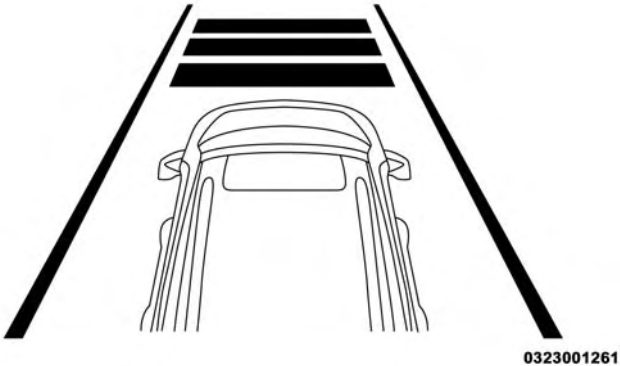

Distance Setting 3 Bars (Long)

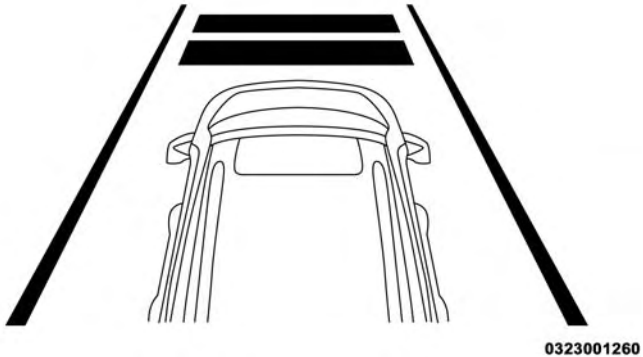

Distance Setting 2 Bars (Medium)

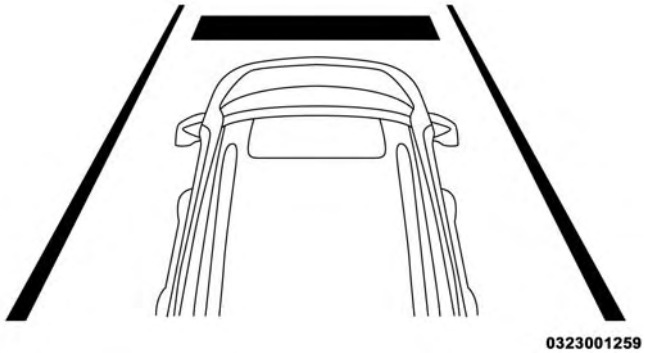

Distance Setting 1 Bar (Short)

To increase the distance setting, push the Distance Setting — Increase button and release. Each time the button is pushed, the distance setting increases by one bar (longer).

To decrease the distance setting, push the Distance Setting — Decrease button and release. Each time the button is pushed, the distance setting decreases by one bar (shorter).

If there is no vehicle ahead, the vehicle will maintain the set speed. If a slower moving vehicle is detected in the same lane, the instrument cluster displays the "Sensed Vehicle Indicator" icon, and the system adjusts vehicle speed automatically to maintain the distance setting, regardless of the set speed.

The vehicle will then maintain the set distance until:

- The vehicle ahead accelerates to a speed above the set speed.
- The vehicle ahead moves out of your lane or view of the sensor.
- The distance setting is changed.
- The system disengages. (Refer to the information on ACC Activation).

The maximum braking applied by ACC is limited; however, the driver can always apply the brakes manually, if necessary.

NOTE: The brake lights will illuminate whenever the ACC system applies the brakes.

A Proximity Warning will alert the driver if ACC predicts that its maximum braking level is not sufficient to maintain the set distance. If this occurs, a visual alert "BRAKE" will flash in the instrument cluster display and a chime will sound while ACC continues to apply its maximum braking capacity.

Brake Alert

NOTE: The "Brake!" Screen in the instrument cluster display is a warning for the driver to take action and does not necessarily mean that the Forward Collision Warning system is applying the brakes autonomously.

Overtake Aid

When driving with ACC engaged and following a vehicle, the system will provide an additional acceleration up to the ACC set speed to assist in passing the vehicle. This additional acceleration is triggered when the driver utilizes the left turn signal and will only be active when passing on the left hand side.

ACC Operation At Stop

If the ACC system brings your vehicle to a standstill while following a target vehicle, and the target vehicle starts moving within two seconds of your vehicle coming to a standstill, your vehicle will resume motion without the need for any driver action.

If the target vehicle does not start moving within two seconds of your vehicle coming to a standstill, the driver will either have to push the RES (resume) button, or apply the accelerator pedal to reengage the ACC. The vehicle will accelerate to the existing set speed.

NOTE: After the ACC system holds your vehicle at a standstill for approximately three consecutive minutes, the parking brake will be activated, and the ACC system will be cancelled.

While the ACC system is holding your vehicle at a standstill, if the driver seatbelt is unbuckled or the driver door is opened, the parking brake will be activated, and the ACC system will be cancelled.

WARNING!

When the ACC system is resumed, the driver must ensure that there are no pedestrians, vehicles or objects in the path of the vehicle. Failure to follow these warnings can result in a collision and death or serious personal injury.

Adaptive Cruise Control (ACC) Menu

The instrument cluster displays the current ACC system settings. The instrument cluster display is located in the center of the instrument cluster. The information it displays depends on ACC system status.

Push the Adaptive Cruise Control (ACC) on/off button (located on the steering wheel) until one of the following displays in the instrument cluster display:

Adaptive Cruise Control Off

When ACC is deactivated, the display will read "Adaptive Cruise Control Off."

Adaptive Cruise Control Ready

When ACC is activated but the vehicle speed setting has not been selected, the display will read "Adaptive Cruise Control Ready."

Push the SET (+) or the SET (-) button (located on the steering wheel) and the following will display in the instrument cluster display:

ACC SET

When ACC is set, the set speed will display in the instrument cluster.

The ACC screen may display once again if any ACC activity occurs, which may include any of the following:

- System Cancel
- Driver Override
- System Off
- ACC Proximity Warning
- ACC Unavailable Warning

The instrument cluster display will return to the last display selected after five seconds of no ACC display activity

Display Warnings And Maintenance

"Wipe Front Radar Sensor In Front Of Vehicle" Warning

The "ACC/FCW Unavailable Wipe Front Radar Sensor" warning will display and also a chime will indicate when conditions temporarily limit system performance.

This most often occurs at times of poor visibility, such as in snow or heavy rain. The ACC system may also become temporarily blinded due to obstructions, such as mud, dirt or ice. In these cases, the instrument cluster display will show "ACC/FCW Unavailable Wipe Front Radar Sensor" and the system will deactivate.

The "ACC/FCW Unavailable Wipe Front Radar Sensor" message can sometimes be displayed while driving in highly reflective areas (i.e. tunnels with reflective tiles, or ice and snow). The ACC system will recover after the vehicle has left these areas. Under rare conditions, when the radar is not tracking any vehicles or objects in its path this warning may temporarily occur.

NOTE: If the "ACC/FCW Unavailable Wipe Front Radar Sensor" warning is active Normal (Fixed Speed) Cruise Control is still available. For additional information refer to "Normal (Fixed Speed) Cruise Control Mode" in this section.

If weather conditions are not a factor, the driver should examine the sensor. It may require cleaning or removal of an obstruction. The sensor is located in the center of the vehicle behind the lower grille.

To keep the ACC System operating properly, it is important to note the following maintenance items:

- Always keep the sensor clean. Carefully wipe the sensor lens with a soft cloth. Be cautious not to damage the sensor lens.
- Do not remove any screws from the sensor. Doing so could cause an ACC system malfunction or failure and require a sensor realignment.
- If the sensor or front end of the vehicle is damaged due to a collision, see your authorized dealer for service.
- Do not attach or install any accessories near the sensor, including transparent material or aftermarket grilles. Doing so could cause an ACC system failure or malfunction.

When the condition that deactivated the system is no longer present, the system will return to the "Adaptive Cruise Control Off" state and will resume function by simply reactivating it.

NOTE: If the "ACC/FCW Unavailable Wipe Front Radar Sensor" message occurs frequently (e.g. more than once on every trip) without any snow, rain, mud, or other obstruction, have the radar sensor realigned at your authorized dealer.

"Clean Front Windshield" Warning

The "ACC/FCW Limited Functionality Clean Front Windshield" warning will display and also a chime will indicate when conditions temporarily limit system performance. This most often occurs at times of poor visibility, such as in snow or heavy rain and fog. The ACC system may also become temporarily blinded due to obstructions, such as mud, dirt, or ice on windshield, driving directly into the sun and fog on the inside of glass. In these cases, the instrument cluster display will show "ACC/FCW Limited Functionality Clean Front Windshield" and the system will have degraded performance.

The "ACC/FCW Limited Functionality Clean Front Windshield" message can sometimes be displayed while driving in adverse weather conditions. The ACC/FCW system will recover after the vehicle has left these areas. Under rare conditions, when the camera is not tracking any vehicles or objects in its path this warning may temporarily occur.

If weather conditions are not a factor, the driver should examine the windshield and the camera located on the back side of the inside rear view mirror. They may require cleaning or removal of an obstruction.

When the condition that created limited functionality is no longer present, the system will return to full functionality.

NOTE: If the "ACC/FCW Limited Functionality Clean Front Windshield" message occurs frequently (e.g. more than once on every trip) without any snow, rain, mud, or other obstruction, have the windshield and forward facing camera inspected at your authorized dealer.

Service ACC/FCW Warning

If the system turns off, and the instrument cluster displays "ACC/FCW Unavailable Service Required" or "Cruise/FCW Unavailable Service Required", there may be an internal system fault or a temporary malfunction that limits ACC functionality. Although the vehicle is still

drivable under normal conditions, ACC will be temporarily unavailable. If this occurs, try activating ACC again later, following an ignition cycle. If the problem persists, see your authorized dealer.

Precautions While Driving With ACC

In certain driving situations, ACC may have detection issues. In these cases, ACC may brake late or unexpectedly. The driver needs to stay alert and may need to intervene.

Towing A Trailer

Towing a trailer is not advised when using ACC.

Offset Driving

ACC may not detect a vehicle in the same lane that is offset from your direct line of travel, or a vehicle merging in from a side lane. There may not be sufficient distance to the vehicle ahead. The offset vehicle may move in and out of the line of travel, which can cause your vehicle to brake or accelerate unexpectedly.

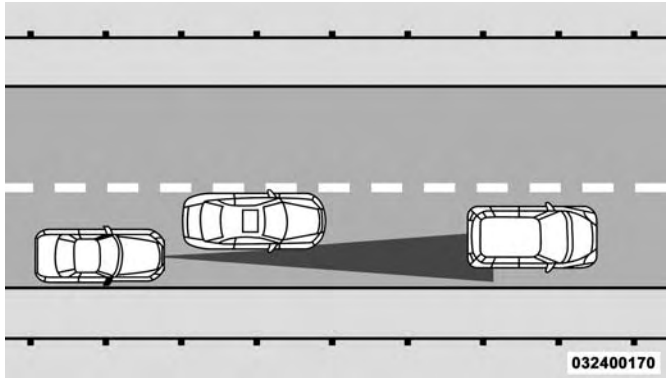

Offset Driving Condition Example

Turns And Bends

When driving on a curve with ACC engaged, the system may decrease the vehicle speed and acceleration for stability reasons, with no target vehicle detected. Once the vehicle is out of the curve the system will resume your original Set Speed. This is a part of normal ACC system functionality.

NOTE: On tight turns ACC performance may be limited.

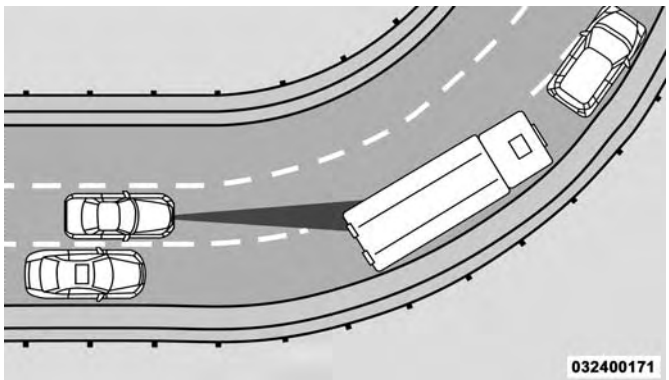

Turn Or Bend Example

Using ACC On Hills

When driving on hills, ACC may not detect a vehicle in your lane. Depending on the speed, vehicle load, traffic conditions, and the steepness of the hills, ACC performance may be limited.

ACC Hill Example

Lane Changing

ACC may not detect a vehicle until it is completely in the lane in which you are traveling. In the illustration shown, ACC has not yet detected the vehicle changing lanes and it may not detect the vehicle until it's too late for the ACC system to take action. ACC may not detect a vehicle until it

is completely in the lane. There may not be sufficient distance to the lane-changing vehicle. Always be attentive and ready to apply the brakes if necessary.

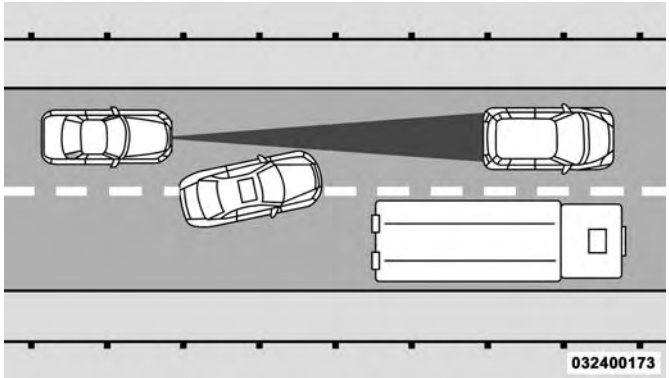

Lane Changing Example

Narrow Vehicles

Some narrow vehicles traveling near the outer edges of the lane or edging into the lane are not detected until they have moved fully into the lane. There may not be sufficient distance to the vehicle ahead.

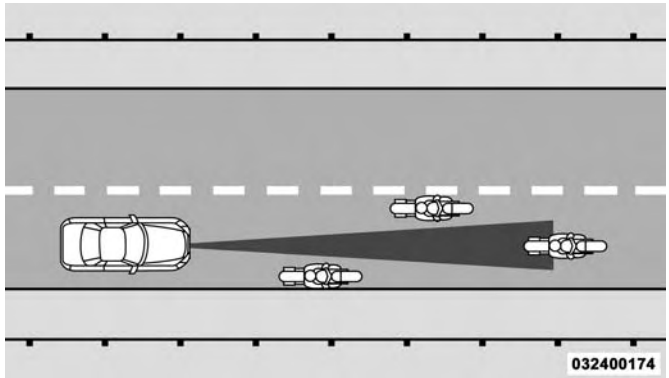

Narrow Vehicle Example

Stationary Objects And Vehicles

ACC does not react to stationary objects and stationary vehicles. For example, ACC will not react in situations where the vehicle you are following exits your lane and the vehicle ahead is stopped in your lane. Always be attentive and ready to apply the brakes if necessary.

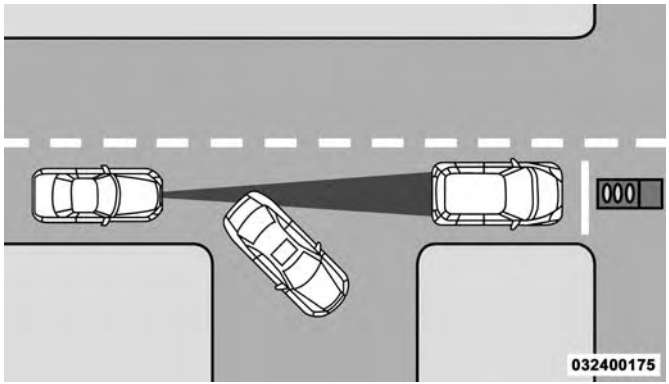

Stationary Object And Stationary Vehicle Example

General Information

The following regulatory statement applies to all Radio Frequency (RF) devices equipped in this vehicle:

This device complies with Part 15 of the FCC Rules and with Industry Canada license-exempt RSS standard(s). Operation is subject to the following two conditions:

1. This device may not cause harmful interference.
2. This device must accept any interference received, including interference that may cause undesired operation.

NOTE: Changes or modifications not expressly approved by the party responsible for compliance could void the user's authority to operate the equipment.

Normal (Fixed Speed) Cruise Control Mode

In addition to Adaptive Cruise Control mode, a Normal (Fixed Speed) Cruise Control mode is available for cruising at fixed speeds. The Normal (Fixed Speed) Cruise Control mode is designed to maintain a set cruising speed without requiring the driver to operate the accelerator. Cruise Control can only be operated if the vehicle speed is above 20 mph (32 km/h).

To change between the different control modes, push the Adaptive Cruise Control (ACC) on/off button which turns the ACC and the Normal (Fixed Speed) Cruise Control off. Pushing the Normal (Fixed Speed) Cruise Control on/off button will result in turning on (changing to) the Normal (Fixed Speed) Cruise Control mode.

WARNING!

In the Normal (Fixed Speed) Cruise Control mode, the system will not react to vehicles ahead. In addition, the proximity warning does not activate and no alarm will sound even if you are too close to the vehicle ahead since neither the presence of the vehicle ahead nor the vehicle-to-vehicle distance is detected. Be sure to maintain a safe distance between your vehicle and the vehicle ahead. Always be aware which mode is selected.

To Set A Desired Speed

Turn the Normal (Fixed Speed) Cruise Control on. When the vehicle has reached the desired speed, push the SET (+) or SET (-) button and release. Release the accelerator and the vehicle will operate at the selected speed. Once a speed has been set a message "CRUISE CONTROL SET TO MPH (km/h)" will appear indicating what speed was set. This light will turn on when the system is turned on via the on/off control. It turns green when the cruise control is set.

To Vary The Speed Setting

To Increase Speed

When the Normal (Fixed Speed) Cruise Control is set, you can increase speed by pushing the SET **(+)** button.

The driver's preferred units can be selected through the instrument cluster. Refer to "Instrument Cluster Display" in "Getting To Know Your Instrument Panel" for more information. The speed increment shown is dependant on the speed of U.S. (mph) or Metric (km/h) units:

U.S. Speed (mph)

- Pushing the SET **(+)** button once will result in a 1 mph increase in set speed. Each subsequent tap of the button results in an increase of 1 mph.
- If the button is continually pushed, the set speed will continue to increase in 5 mph increments until the button is released. The increase in set speed is reflected in the instrument cluster display.

Metric Speed (km/h)

- Pushing the SET **(+)** button once will result in a 1 km/h increase in set speed. Each subsequent tap of the button results in an increase of 1 km/h.
- If the button is continually pushed, the set speed will continue to increase in 10 km/h increments until the button is released. The increase in set speed is reflected in the instrument cluster display.

To Decrease Speed

When the Normal (Fixed Speed) Cruise Control is set, you can decrease speed by pushing the SET **(-)** button.

The driver's preferred units can be selected through the instrument cluster. Refer to "Instrument Cluster Display" in "Getting To Know Your Instrument Panel" for more information. The speed decrement shown is dependant on the speed of U.S. (mph) or Metric (km/h) units:

U.S. Speed (mph)

- Pushing the SET **(-)** button once will result in a 1 mph decrease in set speed. Each subsequent tap of the button results in a decrease of 1 mph.
- If the button is continually pushed, the set speed will continue to decrease in 5 mph decrements until the button is released. The decrease in set speed is reflected in the instrument cluster display.

Metric Speed (km/h)

- Pushing the SET **(-)** button once will result in a 1 km/h decrease in set speed. Each subsequent tap of the button results in a decrease of 1 km/h.
- If the button is continually pushed, the set speed will continue to decrease in 10 km/h decrements until the button is released. The decrease in set speed is reflected in the instrument cluster display.

To Cancel

The following conditions will cancel the Normal (Fixed Speed) Cruise Control without clearing the memory:

- The brake pedal is applied.
- The CANC (cancel) button is pushed.
- The Electronic Stability Control/Traction Control System (ESC/TCS) activates.
- The vehicle parking brake is applied.

- The braking temperature exceeds normal range (overheated).
- The gear selector is removed from the DRIVE position.

To Resume Speed

To resume a previously set speed, push the RES button and release. Resume can be used at any speed above 20 mph (32 km/h).

To Turn Off

The system will turn off and erase the set speed in memory if:

- The Normal (Fixed Speed) Cruise Control on/off button is pushed.
- The ignition is turned OFF.
- The Adaptive Cruise Control (ACC) on/off button is pushed.

PARKSENSE REAR PARK ASSIST — IF EQUIPPED

The ParkSense Rear Park Assist system provides visual and audible indications of the distance between the rear fascia and a detected obstacle when backing up, e.g. during a parking maneuver. If your vehicle is equipped with an Automatic Transmission, the vehicle brakes may be automatically applied and released when performing a reverse parking maneuver if the system detects a possible collision with an obstacle.

NOTE:

- The driver can override the automatic braking function by pressing the gas pedal, turning ParkSense off via ParkSense switch, or changing the gear while the automatic brakes are being applied.
- Automatic brakes will not be available if ESC is not available.
- Automatic brakes will not be available if there is a faulted condition detected with the ParkSense Park Assist system or the Braking System Module.
- The automatic braking function may not provide enough vehicle deceleration to avoid colliding with a detected obstacle depending on vehicle speed, road conditions, and brake capability.
- The automatic braking function may not be applied fast enough for moving obstacles that approach the rear of the vehicle from the left and / or right sides.

- The automatic braking function can be enabled/disabled from the Customer-Programmable Features section of the Uconnect System.
- ParkSense will retain its last known configuration state for the automatic braking function through ignition cycles.

The automatic braking function is intended to assist the driver in avoiding possible collisions with detected obstacles when backing up in REVERSE gear.

NOTE:

- The driver is always responsible for controlling the vehicle.
- The system is provided to assist the driver and not to substitute the driver.
- The driver must stay in full control of the vehicle's acceleration and braking and is responsible for the vehicle's movements.

Refer to "ParkSense System Usage Precautions" for limitations of this system and recommendations.

ParkSense will retain the last system state (enabled or disabled) from the last ignition cycle when the ignition is changed to the ON/RUN position.

ParkSense can be active only when the gear selector is in REVERSE. If ParkSense is enabled at this gear selector position, the system will remain active until the vehicle speed is increased to approximately 7 mph (11 km/h) or above. When in REVERSE and above the system's operating speed, a warning will appear within the instrument cluster display indicating the vehicle speed is too fast. The system will become active again if the vehicle speed is decreased to speeds less than approximately 6 mph (9 km/h).

ParkSense Sensors

The four ParkSense sensors, located in the rear fascia/bumper, monitor the area behind the vehicle that is within the sensors' field of view. The sensors can detect obstacles from approximately 12 inches (30 cm) up to 79 inches (200 cm) from the rear fascia/bumper in the horizontal direction, depending on the location, type and orientation of the obstacle.

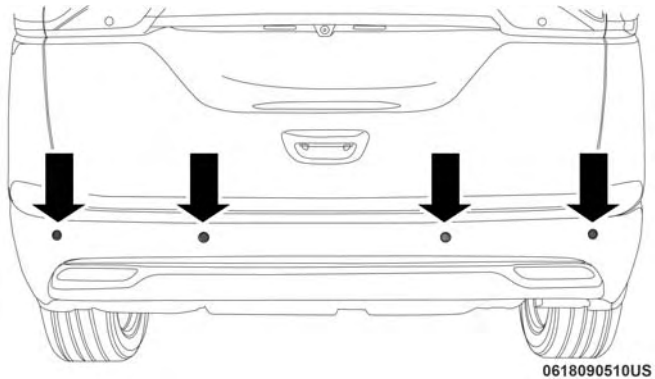

Rear Sensor Locations

ParkSense Visual Alert

The ParkSense Warning screen will only be displayed if Sound and Display is selected from the Customer - Programmable Features section of the Uconnect System. Refer to "Uconnect Settings" in "Multimedia" for further information.

The ParkSense Warning screen is located within the instrument cluster display. It provides visual warnings to indicate the distance between the rear fascia/bumper and the detected obstacle. Refer to "Instrument Cluster Display" in "Getting To Know Your Instrument Panel" for further information.

ParkSense Display

When the vehicle is in REVERSE and an obstacle has been detected, the warning display will turn on indicating the system status, and remain on until the vehicle is moved out of REVERSE.

The system will indicate a detected obstacle by showing a single arc in one or more regions based on the obstacle's distance and location relative to the vehicle.

If an obstacle is detected in the center rear region, the display will show a single solid arc in the center rear region and will produce a one-half second tone. As the vehicle

moves closer to the obstacle, the display will show the single arc moving closer to the vehicle and the sound tone will change from slow, to fast, to continuous.

If an obstacle is detected in the left and/or right rear region, the display will show a single flashing arc in the left and/or right rear region and will produce a fast sound tone. As the vehicle moves closer to the obstacle, the display will show the single arc moving closer to the vehicle and the tone will change from fast to continuous.

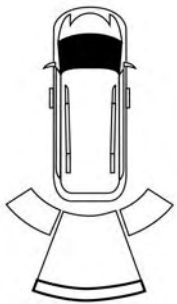

0618087681US

Single 1/2 Second Tone/Solid Arc

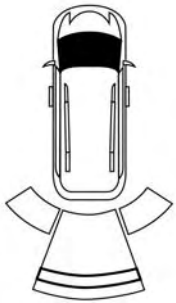

0618087682US

Slow Tone/Solid Arc

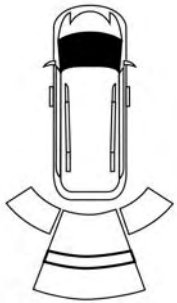

0618087683US

Slow Tone/Solid Arc

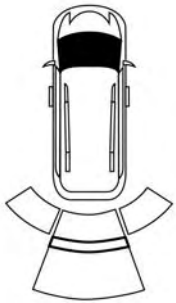

0618087684US

Fast Tone/Flashing Arc

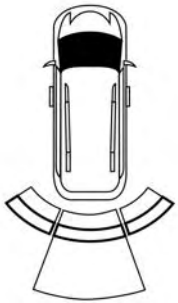

Fast Tone/Flashing Arc

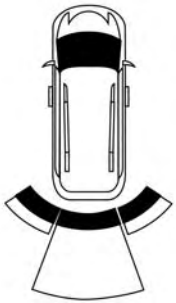

Continuous Tone/Flashing Arc

The vehicle is close to the obstacle when the warning display shows one flashing arc and sounds a continuous tone. The following chart shows the warning alert operation when the system is detecting an obstacle:

WARNING ALERTS							
Rear Distance (in/cm)	Greater than 79 inches (200 cm)	79-59 inches (200-150 cm)	59-47 inches (150-120 cm)	47-39 inches (120-100 cm)	39-25 inches (100-65 cm)	25-12 inches (65-30 cm)	Less than 12 inches (30 cm)
Arcs — Left	None	None	None	None	None	2nd Flashing	1st Flashing
Arcs — Center	None	6th Solid	5th Solid	4th Solid	3rd Flashing	2nd Flashing	1st Flashing
Arcs — Right	None	None	None	None	None	2nd Flashing	1st Flashing
Audible Alert Chime	None	Single 1/2-Second Tone (for rear center only)	Slow (for rear center only)	Slow (for rear center only)	Fast (for rear center only)	Fast	Continuous
Radio Volume Reduced	No	Yes	Yes	Yes	Yes	Yes	Yes

NOTE: ParkSense will reduce the volume of the radio, if on, when the system is sounding an audio tone.

Enabling And Disabling ParkSense

ParkSense can be enabled and disabled with the ParkSense switch, located on the switch panel below the Uconnect display.

When the ParkSense switch is pushed to disable the system, the instrument cluster will display the "PARKSENSE OFF" message for approximately five seconds. Refer to "Instrument Cluster Display" in "Getting To Know Your Instrument Panel" for further information. When the gear selector is moved to REVERSE and the system is disabled, the instrument cluster display will show the "PARKSENSE OFF" message for as long as the vehicle is in REVERSE.

The ParkSense switch LED will be on when ParkSense is disabled or requires service. The ParkSense switch LED will be off when the system is enabled. If the ParkSense switch is pushed, and requires service, the ParkSense switch LED will blink momentarily, and then the LED will be on.

NOTE: When KeySense feature is present, the ParkSense System will reject customer input to turn the system off via the hard switch. The instrument cluster display will show "KeySense in Use Selected Feature Cannot be Disabled" message.

Service The ParkSense Rear Park Assist System

During vehicle start up, when the ParkSense Rear Park Assist System has detected a faulted condition, the instrument cluster will actuate a single chime, once per ignition cycle, and it will display the "PARKSENSE UNAVAILABLE WIPE REAR SENSORS" or the "PARKSENSE UNAVAILABLE SERVICE REQUIRED" message. Refer to "Instrument Cluster Display" in "Getting To Know Your Instrument Panel" for further information. When the gear selector is moved to REVERSE and the system has detected a faulted condition, the instrument cluster display will show the "PARKSENSE UNAVAILABLE WIPE REAR SENSORS" or "PARKSENSE UNAVAILABLE SERVICE REQUIRED" message for five seconds while the vehicle is in REVERSE. Under this condition, ParkSense will not operate and "PARKSENSE OFF" message will be displayed.

If "PARKSENSE UNAVAILABLE WIPE REAR SENSORS" appears in the instrument cluster display make sure the outer surface and the underside of the rear fascia/bumper

is clean and clear of snow, ice, mud, dirt or other obstruction and then cycle the ignition. If the message continues to appear, see an authorized dealer.

If "PARKSENSE UNAVAILABLE SERVICE REQUIRED" appears in the instrument cluster display, see an authorized dealer.

Cleaning The ParkSense System

Clean the ParkSense sensors with water, car wash soap and a soft cloth. Do not use rough or hard cloths. Do not scratch or poke the sensors. Otherwise, you could damage the sensors.

ParkSense System Usage Precautions

NOTE:

- Ensure that the rear bumper is free of snow, ice, mud, dirt and debris to keep the ParkSense system operating properly.
- Jackhammers, large trucks, and other vibrations could affect the performance of ParkSense.
- When you turn ParkSense off, the instrument cluster will display "PARKSENSE OFF". Furthermore, once you turn ParkSense off, it remains off until you turn it on again, even if you cycle the ignition.
- When you move the gear selector to the REVERSE position and ParkSense is turned off, the instrument cluster display will show "PARKSENSE OFF" message for as long as the vehicle is in REVERSE.
- ParkSense, when on, will reduce the volume of the radio when it is sounding a tone.
- Clean the ParkSense sensors regularly, taking care not to scratch or damage them. The sensors must not be covered with ice, snow, slush, mud, dirt or debris. Failure to do so can result in the system not working properly. The ParkSense system might not detect an obstacle behind the fascia/bumper, or it could provide a false indication that an obstacle is behind the fascia/bumper.
- ParkSense should be disabled when the liftgate is in the open position.

- Use the ParkSense switch to turn the ParkSense system OFF if objects such as bicycle carriers, trailer hitches, etc. are placed within 12 inches (30 cm) from the rear fascia/bumper. Failure to do so can result in the system misinterpreting a close object as a sensor problem, causing the "PARKSENSE UNAVAILABLE SERVICE REQUIRED" message to be displayed in the instrument cluster display.

WARNING!

- **Drivers must be careful when backing up even when using ParkSense. Always check carefully behind your vehicle, look behind you, and be sure to check for pedestrians, animals, other vehicles, obstructions, and blind spots before backing up. You are responsible for safety and must continue to pay attention to your surroundings. Failure to do so can result in serious injury or death.**
- **Before using ParkSense, it is strongly recommended that the ball mount and hitch ball assembly is disconnected from the vehicle when the vehicle is not used for towing. Failure to do so can result in injury or damage to vehicles or obstacles because the**

(Continued)

WARNING! ***(Continued)***

hitch ball will be much closer to the obstacle than the rear fascia when the loudspeaker sounds the continuous tone. Also, the sensors could detect the ball mount and hitch ball assembly, depending on its size and shape, giving a false indication that an obstacle is behind the vehicle.

CAUTION!

- **ParkSense is only a parking aid and it is unable to recognize every obstacle, including small obstacles. Parking curbs might be temporarily detected or not detected at all. Obstacles located above or below the sensors will not be detected when they are in close proximity.**
- **The vehicle must be driven slowly when using ParkSense in order to be able to stop in time when an obstacle is detected. It is recommended that the driver looks over his/her shoulder when using ParkSense.**

PARKSENSE FRONT AND REAR PARK ASSIST — IF EQUIPPED

The ParkSense Park Assist system provides visual and audible indications of the distance between the rear and/or front fascia and a detected obstacle when backing up or moving forward, e.g. during a parking maneuver. If your vehicle is equipped with an Automatic Transmission, the vehicle brakes may be automatically applied and released when performing a reverse parking maneuver if the system detects a possible collision with an obstacle.

NOTE:

- The driver can override the automatic braking function by pressing the gas pedal, turning ParkSense off via ParkSense switch, or changing the gear while the automatic brakes are being applied.
- Automatic brakes will not be available if ESC is not available.
- Automatic brakes will not be available if there is a faulted condition detected with the ParkSense Park Assist system or the Braking System Module.
- The automatic braking function may not provide enough vehicle deceleration to avoid colliding with a detected obstacle depending on vehicle speed, road conditions, and brake capability.
- The automatic braking function may not be applied fast enough for moving obstacles that approach the rear of the vehicle from the left and / or right sides.
- The automatic braking function can be enabled/disabled from the Customer-Programmable Features section of the Uconnect System.
- ParkSense will retain its last known configuration state for the automatic braking function through ignition cycles.

The automatic braking function is intended to assist the driver in avoiding possible collisions with detected obstacles when backing up in REVERSE gear.

NOTE:

- The driver is always responsible for controlling the vehicle.
- The system is provided to assist the driver and not to substitute the driver.

- The driver must stay in full control of the vehicle's acceleration and braking and is responsible for the vehicle's movements.

Refer to "ParkSense System Usage Precautions" for limitations of this system and recommendations.

ParkSense will retain the last system state (enabled or disabled) from the last ignition cycle when the ignition is changed to the ON/RUN position.

ParkSense can be active only when the gear selector is in REVERSE or DRIVE. If ParkSense is enabled at one of these gear selector positions, the system will remain active until the vehicle speed is increased to approximately 7 mph (11 km/h) or above. When in REVERSE and above the system's operating speed, a warning will appear in the instrument cluster display indicating the vehicle speed is too fast. The system will become active again if the vehicle speed is decreased to speeds less than approximately 6 mph (9 km/h).

ParkSense Sensors

The six ParkSense sensors, located in the rear fascia/bumper, monitor the area behind the vehicle that is within the sensors' field of view. The sensors can detect obstacles from approximately 12 inches (30 cm) up to 79 in (200 cm) from the rear fascia/bumper in the horizontal direction, depending on the location, type and orientation of the obstacle.

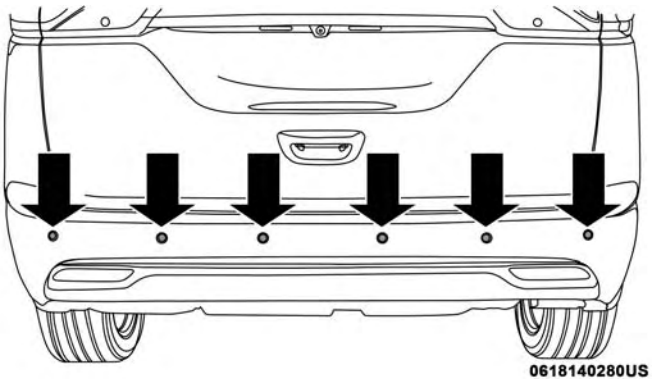

Rear Sensor Locations

The six ParkSense sensors, located in the front fascia/bumper, monitor the area in front of the vehicle that is within the sensors' field of view. The sensors can detect obstacles from approximately 12 inches (30 cm) up to 47 in

(120 cm) from the front fascia/bumper in the horizontal direction, depending on the location, type and orientation of the obstacle.

ParkSense Visual Alert

The ParkSense Warning screen will only be displayed if "Sound and Display" is selected from the Customer - Programmable Features section of the Uconnect System. Refer to "Uconnect Settings" in "Multimedia" for further information.

The ParkSense Warning screen is located within the instrument cluster display. It provides visual warnings to indicate the distance between the rear fascia/bumper and/or front fascia/bumper and the detected obstacle. Refer to "Instrument Cluster Display" in "Getting To Know Your Instrument Panel" for further information.

ParkSense Display

Rear Park Assist

When the vehicle is in REVERSE, the warning display will turn ON indicating the system status.

The system will indicate a detected obstacle by showing a single arc in one or more regions based on the obstacle's distance and location relative to the vehicle.

If an obstacle is detected in the center rear region, the display will show a single solid arc in the center rear region and will produce a one-half second tone. As the vehicle moves closer to the obstacle, the display will show the single arc moving closer to the vehicle and the sound tone will change from slow, to fast, to continuous.

If an obstacle is detected in the left and/or right rear region, the display will show a single flashing arc in the left and/or right rear region and will produce a fast sound tone. As the vehicle moves closer to the obstacle, the display will show the single arc moving closer to the vehicle and the tone will change from fast to continuous.

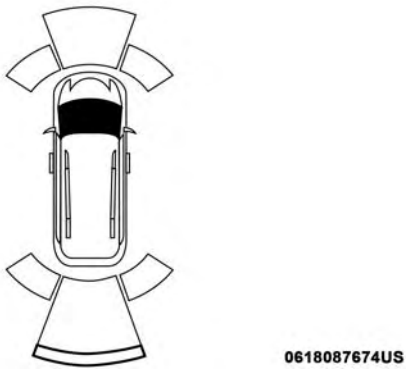

Single 1/2 Second Tone/Solid Arc

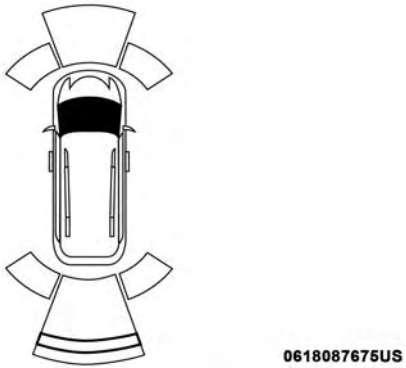

Slow Tone/Solid Arc

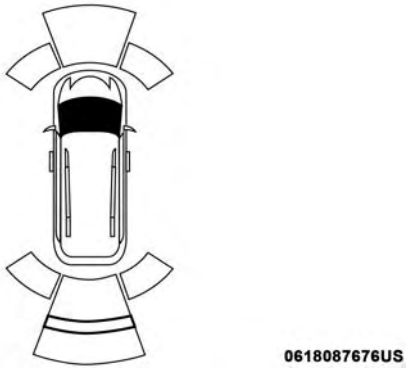

Slow Tone/Solid Arc

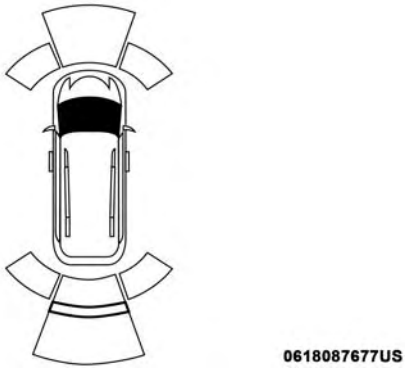

Fast Tone/Flashing Arc

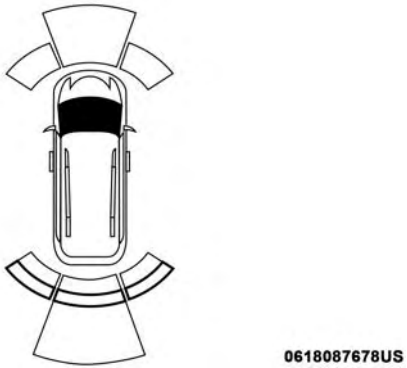

Fast Tone/Flashing Arc

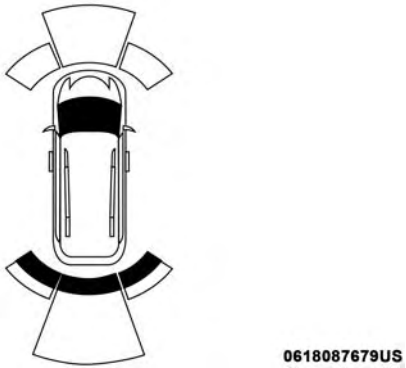

Continuous Tone/Flashing Arc

The vehicle is close to the obstacle when the warning display shows one flashing arc and sounds a continuous tone. The following chart shows the warning alert operation when the system is detecting an obstacle:

WARNING ALERTS							
Rear Distance (inches/cm)	Greater than 79 inches (200 cm)	79-59 inches (200-150 cm)	59-47 inches (150-120 cm)	47-39 inches (120-100 cm)	39-25 inches (100-65 cm)	25-12 inches (65-30 cm)	Less than 12 inches (30 cm)
Arcs — Left	None	None	None	None	None	2nd Flashing	1st Flashing
Arcs — Center	None	6th Solid	5th Solid	4th Solid	3rd Flashing	2nd Flashing	1st Flashing
Arcs — Right	None	None	None	None	None	2nd Flashing	1st Flashing
Audible Alert Chime	None	Single 1/2-Second Tone (for rear center only)	Slow (for rear center only)	Slow (for rear center only)	Fast (for rear center only)	Fast	Continuous
Radio Volume Reduced	No	Yes	Yes	Yes	Yes	Yes	Yes

NOTE: ParkSense will reduce the volume of the radio, if on, when the system is sounding an audio tone.

Front Park Assist

When the vehicle is in DRIVE the ParkSense Warning screen will be displayed when an obstacle is detected.

The system will indicate a detected obstacle by showing a single arc in one or more regions based on the obstacle's distance and location relative to the vehicle.

If an obstacle is detected in the center front region, the display will show a single arc in the center front region. As the vehicle moves closer to the obstacle, the display will show the single arc moving closer to the vehicle. A fast sound tone will be produced when reaching the second flashing arc and will change to a continuous sound tone when the first flashing arc appears.

If an obstacle is detected in the left and/or right front region, the display will show a single flashing arc in the left and/or right front region and will produce a fast sound tone. As the vehicle moves closer to the obstacle, the display will show the single arc moving closer to the vehicle and the tone will change from fast to continuous.

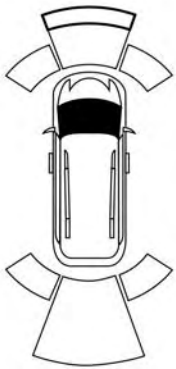

No Tone/Solid Arc

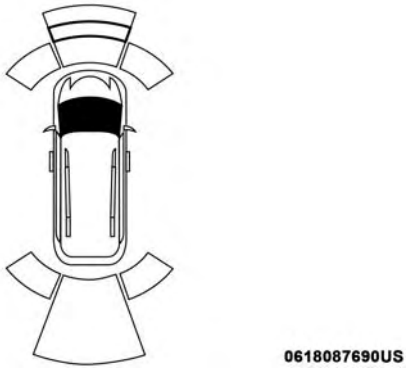

No Tone/Flashing Arc

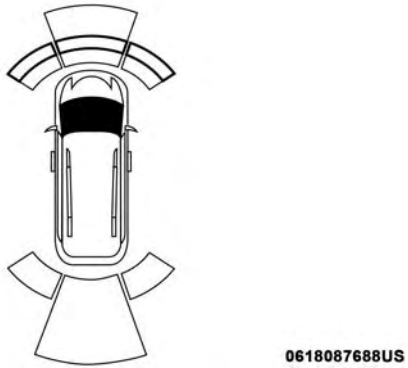

Fast Tone/Flashing Arc

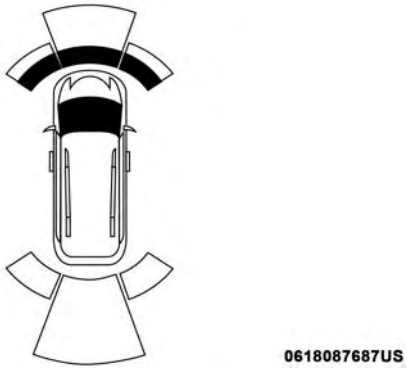

Continuous Tone/Flashing Arc

The vehicle is close to the obstacle when the warning display shows one flashing arc and sounds a continuous tone. The following chart shows the warning alert operation when the system is detecting an obstacle:

WARNING ALERTS					
Front Distance (inches/cm)	Greater than 47 inches (120 cm)	47-39 inches (120-100 cm)	39-25 inches (100-65 cm)	25-12 inches (65-30 cm)	Less than 12 inches (30 cm)
Arcs — Left	None	None	None	2nd Flashing	1st Flashing
Arcs — Center	None	4th Solid	3rd Flashing	2nd Flashing	1st Flashing
Arcs — Right	None	None	None	2nd Flashing	1st Flashing
Audible Alert Chime	None	None	None	Fast	Continuous
Radio Volume Reduced	No	No	No	Yes	Yes

NOTE: ParkSense will reduce the volume of the radio, if on, when the system is sounding an audio tone.

Front Park Assist Audible Alerts

ParkSense will turn off the Front Park Assist audible alert (chime) after approximately three seconds when an obstacle has been detected, the vehicle is stationary, and brake pedal is applied.

Adjustable Chime Volume Settings

Front and Rear chime volume settings can be selected from the Customer-Programmable Features section of the Uconnect System, refer to “Uconnect Settings” in “Multimedia” for further information.

If the Uconnect System is equipped, chime volume settings will not be accessible from the instrument cluster display.

The chime volume settings include LOW, MEDIUM, and HIGH. The factory default volume setting is MEDIUM.

ParkSense will retain its last known configuration state through ignition cycles.

Enabling And Disabling ParkSense

ParkSense can be enabled and disabled with the ParkSense switch, located on the switch panel below the Uconnect display.

When the ParkSense switch is pushed to disable the system, the instrument cluster will display the “PARKSENSE OFF” message for approximately five seconds. Refer to “Instrument Cluster Display” in “Getting To Know Your Instrument Panel” for further information. When the gear selector is moved to REVERSE and the system is disabled, the instrument cluster display will show the “PARKSENSE OFF” message for as long as the vehicle is in REVERSE.

The ParkSense switch LED will be on when ParkSense is disabled or requires service. The ParkSense switch LED will be off when the system is enabled. If the ParkSense switch is pushed, and requires service, the ParkSense switch LED will blink momentarily, and then the LED will be on.

NOTE: When KeySense feature is present, the ParkSense System will reject customer input to turn the system off via the hard switch. The instrument cluster display will show ″KeySense in Use Selected Feature Cannot be Disabled″ message.

Service The ParkSense Park Assist System

During vehicle start up, when the ParkSense System has detected a faulted condition, the instrument cluster will actuate a single chime, once per ignition cycle, and it will display the ″PARKSENSE UNAVAILABLE WIPE REAR SENSORS″, ″PARKSENSE UNAVAILABLE WIPE FRONT SENSORS″, or the ″PARKSENSE UNAVAILABLE SERVICE REQUIRED″ message for five seconds. When the gear selector is moved to REVERSE and the system has detected a faulted condition, the instrument cluster display will show a ″PARKSENSE UNAVAILABLE WIPE REAR SENSORS″, ″PARKSENSE UNAVAILABLE WIPE FRONT SENSORS″ or ″PARKSENSE UNAVAILABLE SERVICE REQUIRED″ pop up message for five seconds. After five seconds, a vehicle graphic will be displayed with a ″WIPE OFF″ or “SERVICE” overlay, depending on the location and fault type. The system will continue to provide arc alerts for the side that is functioning properly. These arc alerts will interrupt the ″PARKSENSE UNAVAILABLE WIPE REAR SENSORS″, ″PARKSENSE UNAVAILABLE WIPE FRONT SENSORS″, or ″PARKSENSE UNAVAILABLE SERVICE REQUIRED″ messages if an object is detected within

the five second pop-up duration. The vehicle graphic will remain displayed for as long as the vehicle is in REVERSE.

Refer to “Instrument Cluster Display” in “Getting To Know Your Instrument Panel” for further information.

If ″PARKSENSE UNAVAILABLE WIPE REAR SENSORS″ or ″PARKSENSE UNAVAILABLE WIPE FRONT SENSORS″ appears in the instrument cluster display make sure the outer surface and the underside of the rear fascia/bumper and/or front fascia/bumper is clean and clear of snow, ice, mud, dirt or other obstruction and then cycle the ignition. If the message continues to appear see an authorized dealer.

If the ″PARKSENSE UNAVAILABLE SERVICE REQUIRED″ message appears in the instrument cluster display, see an authorized dealer.

Cleaning The ParkSense System

Clean the ParkSense sensors with water, car wash soap and a soft cloth. Do not use rough or hard cloths. Do not scratch or poke the sensors. Otherwise, you could damage the sensors.

ParkSense System Usage Precautions

NOTE:

- Ensure that the front and rear bumper are free of snow, ice, mud, dirt and debris to keep the ParkSense system operating properly.
- Construction equipment, large trucks, and other vibrations could affect the performance of ParkSense.
- When you turn ParkSense off, the instrument cluster will display “PARKSENSE OFF.” Furthermore, once you turn ParkSense off, it remains off until you turn it on again, even if you cycle the ignition key.
- When you move the gear selector to the REVERSE position and ParkSense is turned off, the instrument cluster will display “PARKSENSE OFF” for five seconds while the vehicle is in REVERSE.
- ParkSense, when on, will reduce the volume of the radio when it is sounding a tone.
- Clean the ParkSense sensors regularly, taking care not to scratch or damage them. The sensors must not be covered with ice, snow, slush, mud, dirt or debris. Failure to do so can result in the system not working properly. The ParkSense system might not detect an obstacle behind or in front of the appropriate fascia/

bumper, or it could provide a false indication that an obstacle is behind or in front of the appropriate fascia/bumper.

- Use the ParkSense switch to turn the ParkSense system off if objects such as bicycle carriers, trailer hitches, etc. are placed within 12 inches (30 cm) from the rear fascia/bumper. Failure to do so can result in the system misinterpreting a close object as a sensor problem, causing the "PARKSENSE UNAVAILABLE SERVICE REQUIRED" message to be displayed in the instrument cluster.
- ParkSense should be disabled when the liftgate is in the open position.
- There may be a delay in the object detection rate if the object is moving. This may cause the automatic braking application to be delayed.

WARNING!

- **Drivers must be careful when backing up even when using ParkSense. Always check carefully behind your vehicle, look behind you, and be sure to check for pedestrians, animals, other vehicles, obstructions,**

(Continued)

WARNING! ***(Continued)***

and blind spots before backing up. You are responsible for safety and must continue to pay attention to your surroundings. Failure to do so can result in serious injury or death.

- **Before using ParkSense, it is strongly recommended that the ball mount and hitch ball assembly is disconnected from the vehicle when the vehicle is not used for towing. Failure to do so can result in injury or damage to vehicles or obstacles because the hitch ball will be much closer to the obstacle than the rear fascia when the loudspeaker sounds the continuous tone. Also, the sensors could detect the ball mount and hitch ball assembly, depending on its size and shape, giving a false indication that an obstacle is behind the vehicle.**

CAUTION!

- **ParkSense is only a parking aid and it is unable to recognize every obstacle, including small obstacles. Parking curbs might be temporarily detected or not detected at all. Obstacles located above or below the**

(Continued)

CAUTION! *(Continued)*

sensors will not be detected when they are in close proximity.

- **The vehicle must be driven slowly when using ParkSense in order to be able to stop in time when an obstacle is detected. It is recommended that the driver looks over his/her shoulder when using ParkSense.**

PARKSENSE ACTIVE PARK ASSIST SYSTEM — IF EQUIPPED

The ParkSense Active Park Assist system is intended to assist the driver during parallel and perpendicular parking maneuvers by identifying a proper parking space, providing audible/visual instructions, and controlling the steering wheel. The ParkSense Active Park Assist system is defined as "semi-automatic" since the driver maintains control of the accelerator, gear selector and brakes. Depending on the driver's parking maneuver selection, the ParkSense Active Park Assist system is capable of maneuvering a vehicle into a parallel or a perpendicular parking space on either side (i.e., driver side or passenger side).

NOTE:

- The driver is always responsible for controlling the vehicle, responsible for any surrounding objects, and must intervene as required.
- The system is provided to assist the driver and not to substitute the driver.
- During a semi-automatic maneuver, if the driver touches the steering wheel after being instructed to remove their hands from the steering wheel, the system will cancel, and the driver will be required to manually complete the parking maneuver.
- The system may not work in all conditions (e.g. environmental conditions such as heavy rain, snow, etc., or if searching for a parking space that has surfaces that will absorb the ultrasonic sensor waves).
- New vehicles from the dealership must have at least 30 miles (48 km) accumulated before the ParkSense Active Park Assist system is fully calibrated and performs accurately. This is due to the system's dynamic vehicle calibration to improve the performance of the feature. The system will also continuously perform the dynamic vehicle calibration to account for differences such as over or under inflated tires and new tires.

Enabling And Disabling The ParkSense Active Park Assist System

The ParkSense Active Park Assist system can be enabled and disabled with the ParkSense Active Park Assist switch, located on the switch panel below the Uconnect display.

To enable the ParkSense Active Park Assist system, push the ParkSense Active Park Assist switch once (LED turns on).

To disable the ParkSense Active Park Assist system, push the ParkSense Active Park Assist switch again (LED turns off).

The ParkSense Active Park Assist system will turn off automatically for any of the following conditions:

- The parking maneuver is completed.
- Vehicle speed greater than 18 mph (30 km/h) when searching for a parking space.
- Vehicle speed greater than 5 mph (7 km/h) during active steering guidance into the parking space.
- Touching the steering wheel during active steering guidance into the parking space.
- Pushing the ParkSense Front and Rear Park Assist switch.
- The driver's door is opened.
- The liftgate is opened.
- Electronic Stability Control/Anti-lock Braking System intervention.
- The ParkSense Active Park Assist system will allow a maximum of eight shifts between DRIVE and REVERSE. If the maneuver cannot be completed within eight shifts, the system will cancel and the instrument cluster display will instruct the driver to complete the maneuver manually.

The ParkSense Active Park Assist system will only operate and search for a parking space when the following conditions are present:

- The gear position is in DRIVE.
- The ignition is in the RUN position.
- The ParkSense Active Park Assist switch is activated.
- The driver's door is closed.
- The liftgate is closed.
- Vehicle speed is less than 15 mph (25 km/h).

NOTE: If the vehicle is driven above approximately 15 mph (25 km/h), the instrument cluster display will instruct the driver to slow down. If the vehicle is driven above approximately 18 mph (30 km/h), the system will cancel. The driver must then reactivate the system by pushing the ParkSense Active Park Assist switch.

- The outer surface and the underside of the front and rear fascias/bumpers are clean and clear of snow, ice, mud, dirt or other obstruction.

When pushed, the LED on the ParkSense Active Park Assist switch will blink momentarily, and then the LED will turn off if any of the above conditions are not present.

Parallel Parking Space Assistance Operation/ Display

When the ParkSense Active Park Assist system is enabled the "Active ParkSense Searching - Push OK for Perpendicular Park" message will appear in the instrument cluster display. You may switch to perpendicular parking if you desire. Push the OK button on the left side steering wheel switch to change your parking space setting.

NOTE:

- When searching for a parking space, use the turn signal indicator to select which side of the vehicle you want to perform the parking maneuver. The ParkSense Active Park Assist system will automatically search for a parking space on the passenger's side of the vehicle if the turn signal is not activated.
- The driver needs to make sure that the selected parking space for the maneuver remains free and clear of any obstructions (e.g. pedestrians, bicycles, etc.).
- The driver is responsible to ensure that the selected parking space is suitable for the maneuver and free/ clear of anything that may be overhanging or protruding into the parking space (e.g., ladders, tailgates, etc. from surrounding objects/vehicles).
- When seeking for a parking space, the driver should drive as parallel or perpendicular (depending on the type of maneuver) to other vehicles as possible.

- The feature will only indicate the last detected parking space (example: if passing multiple available parking spaces, the system will only indicate the last detected parking space for the maneuver).

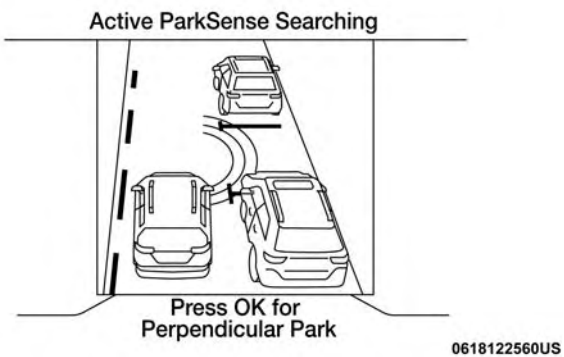

Active ParkSense Searching

When an available parking space has been found, and the vehicle is not in position, you will be instructed to move forward to position the vehicle for a parallel parking sequence.

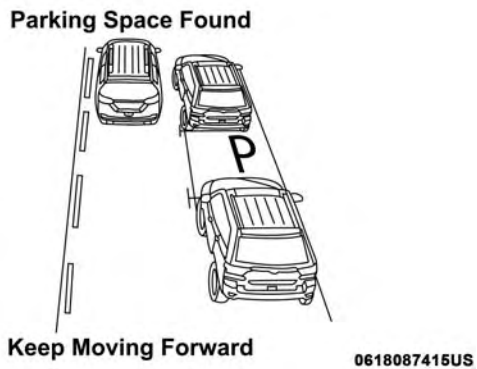

Parking Space Found — Keep Moving Forward

Once the vehicle is in position, you will be instructed to stop the vehicle's movement and remove your hands from the steering wheel.

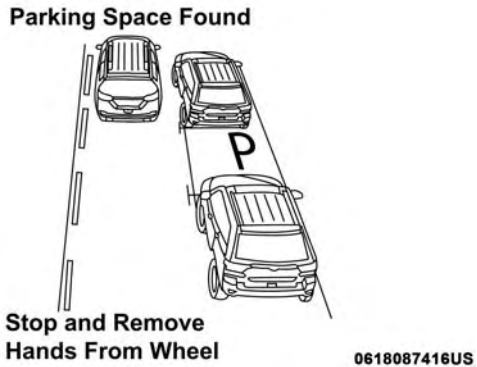

Parking Space Found — Stop And Remove Hands From Wheel

Once the vehicle is at a standstill with your hands removed from the steering wheel, you will be instructed to place the gear selector into the REVERSE position.

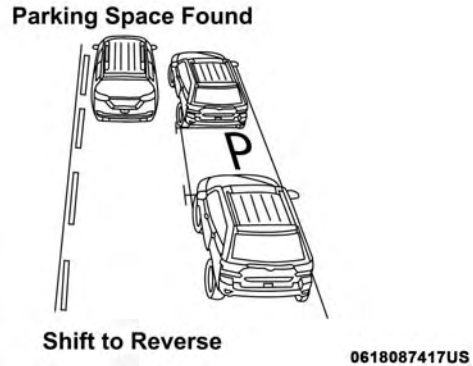

Parking Space Found — Shift To Reverse

When the driver places the gear selector into the REVERSE position, the system may instruct the driver to wait for steering to complete.

Check Surroundings — Wait For Steering To Complete

The system will then instruct the driver to check their surroundings and move backward.

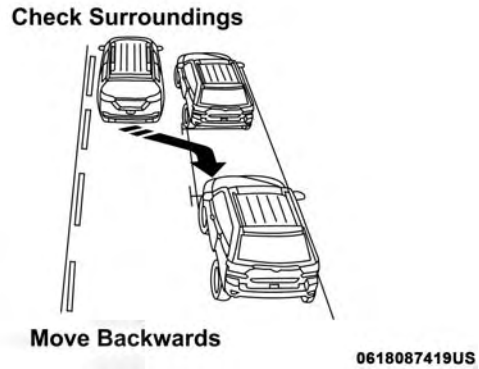

Check Surroundings — Move Backward

NOTE:

- It is the driver's responsibility to use the brake and accelerator during the semi-automatic parking maneuver.
- When the system instructs the driver to remove their hands from the steering wheel, the driver should check their surroundings and begin to back up slowly.

- The ParkSense Active Park Assist system will allow a maximum of eight shifts between DRIVE or REVERSE. If the maneuver cannot be completed within eight shifts, the system will cancel and the instrument cluster display will instruct the driver to complete the maneuver manually.
- The system will cancel the maneuver if the vehicle speed exceeds 5 mph (7 km/h) during active steering guidance into the parking space. The system will provide a warning to the driver at 3 mph (5 km/h) that tells them to slow down. The driver is then responsible for completing the maneuver if the system is canceled.
- If the system is canceled during the maneuver for any reason, the driver must take full control of the vehicle.

When the vehicle has reached the end of its backward movement, the system will instruct the driver to check their surroundings and stop the vehicle's movement.

Check Surroundings — STOP

NOTE: It is the driver's responsibility to use the brake and stop the vehicle. The driver should check their surroundings and be prepared to stop the vehicle either when instructed to, or when driver intervention is required.

Once the vehicle is in a standstill condition, the driver will be instructed to place the gear selector into the DRIVE position.

Check Surroundings — Shift To Drive

When the driver places the gear selector into the DRIVE position, the system may instruct the driver to wait for steering to complete.

Check Surroundings — Wait For Steering To Complete

The system will then instruct the driver to check their surroundings and move forward.

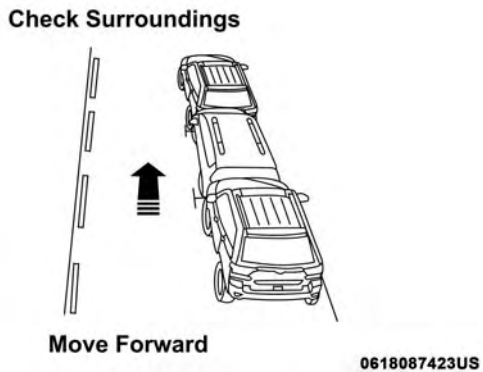

Check Surroundings — Move Forward

When the vehicle has reached the end of its forward movement, the system will instruct the driver to check their surroundings and stop the vehicle's movement.

Check Surroundings — STOP

NOTE: It is the driver's responsibility to use the brake and stop the vehicle. The driver should check their surroundings and be prepared to stop the vehicle either when instructed to, or when driver intervention is required.

Once the vehicle is in a standstill condition, the driver will be instructed to place the gear selector into the REVERSE position.

Check Surroundings — Shift To Reverse

When the driver places the gear selector into the REVERSE position, the system may instruct the driver to wait for steering to complete.

Check Surroundings — Wait For Steering To Complete

The system will then instruct the driver to check their surroundings and move backward.

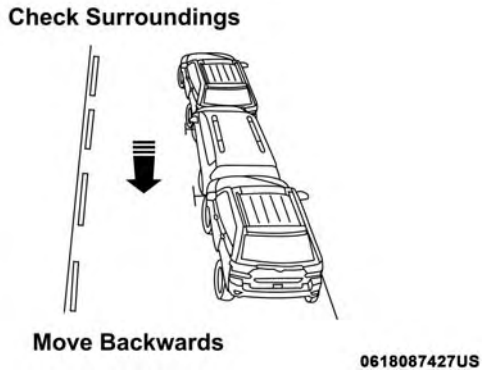

Check Surroundings — Move Backward

Your vehicle is now in the parallel park position. When the maneuver is complete, the driver will be instructed to check the vehicle's parking position. If the driver is satisfied with the vehicle position, they should shift to PARK. The "Active ParkSense Complete - Check Parking Position" message will be momentarily displayed.

Active ParkSense Complete — Check Parking Position

Perpendicular Parking Space Assistance Operation/Display

When the ParkSense Active Park Assist system is enabled, the "Active ParkSense Searching - Push OK for Perpendicular Park" message will show in the instrument cluster display. Push the OK button on the left side steering wheel switch to change your parking space setting to a perpendicular maneuver. You may switch back to parallel parking if you desire.

Once the driver pushes OK for a perpendicular parking maneuver, the "Active ParkSense Searching - Push OK for Parallel Park" message will appear in the instrument cluster display.

Active ParkSense Searching Display

NOTE:

- When searching for a parking space, use the turn signal indicator to select which side of the vehicle you want to perform the parking maneuver. The ParkSense Active Park Assist system will automatically search for a parking space on the passenger's side of the vehicle if the turn signal is not activated.
- The driver needs to make sure that the selected parking space for the maneuver remains free and clear of any obstructions (e.g. pedestrians, bicycles, etc.).

- The driver is responsible to ensure that the selected parking space is suitable for the maneuver and free/clear of anything that may be overhanging or protruding into the parking space (e.g., ladders, tailgates, etc. from surrounding objects/vehicles).
- When seeking for a parking space, the driver should drive as parallel or perpendicular (depending on the type of maneuver) to other vehicles as possible.
- The feature will only indicate the last detected parking space (example: if passing multiple available parking spaces, the system will only indicate the last detected parking space for the maneuver).

When an available parking space has been found, and the vehicle is not in position, you will be instructed to move forward to position the vehicle for a perpendicular parking sequence.

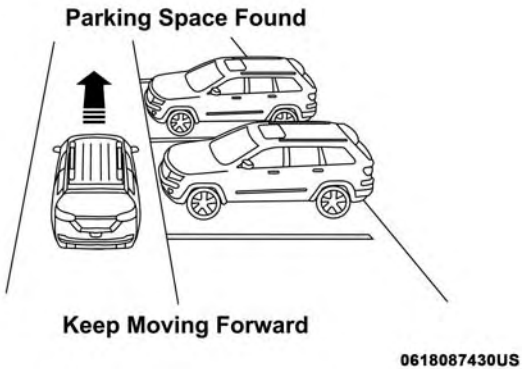

Parking Space Found — Keep Moving Forward

Once the vehicle is in position, you will be instructed to stop the vehicle's movement and remove your hands from the steering wheel.

Parking Space Found — Stop And Remove Hands From Wheel

Once the vehicle is at a standstill with your hands removed from the steering wheel, you will be instructed to place the gear selector into the REVERSE position.

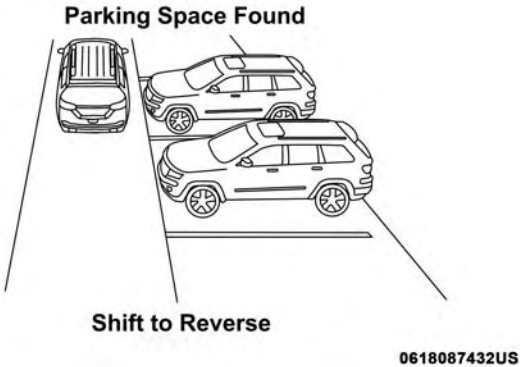

Parking Space Found — Shift To Reverse

When the driver places the gear selector into the REVERSE position, the system may instruct the driver to wait for steering to complete.

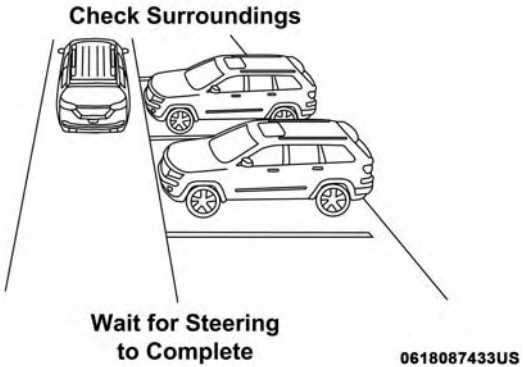

Check Surroundings — Wait For Steering To Complete

The system will then instruct the driver to check their surroundings and move backward.

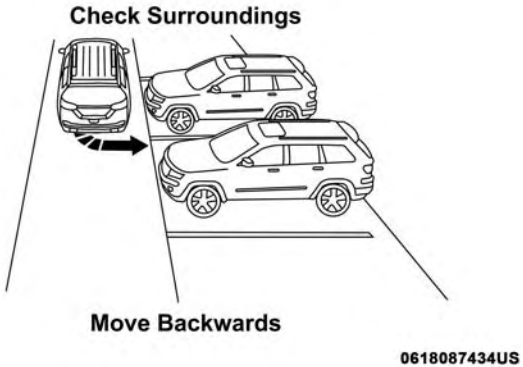

Check Surroundings — Move Backwards

NOTE:

- It is the driver's responsibility to use the brake and accelerator during the semi-automatic parking maneuver.
- When the system instructs the driver to remove their hands from the steering wheel, the driver should check their surroundings and begin to back up slowly.

- The ParkSense Active Park Assist system will allow a maximum of eight shifts between DRIVE or REVERSE. If the maneuver cannot be completed within eight shifts, the system will cancel and the instrument cluster display will instruct the driver to complete the maneuver manually.
- The system will cancel the maneuver if the vehicle speed exceeds 5 mph (7 km/h) during active steering guidance into the parking space. The system will provide a warning to the driver at 3 mph (5 km/h) that tells them to slow down. The driver is then responsible for completing the maneuver if the system is canceled.
- If the system is canceled during the maneuver for any reason, the driver must take control of the vehicle.

When the vehicle has reached the end of its backward movement, the system will instruct the driver to check their surroundings and stop the vehicle's movement.

0618087435US

Check Surroundings — STOP

NOTE: It is the driver's responsibility to use the brake and stop the vehicle. The driver should check their surroundings and be prepared to stop the vehicle either when instructed to, or when driver intervention is required.

Once the vehicle is in a standstill condition, the driver will be instructed to place the gear selector into the DRIVE position.

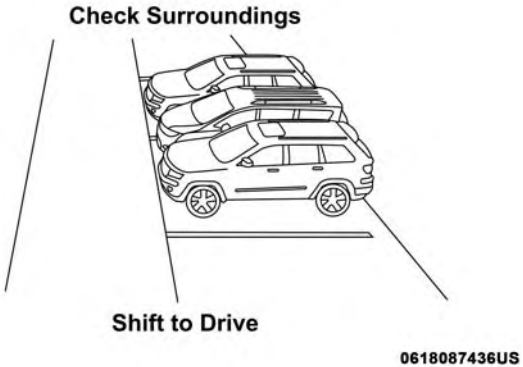

Check Surroundings — Shift To Drive

When the driver places the gear selector into the DRIVE position, the system may instruct the driver to wait for steering to complete.

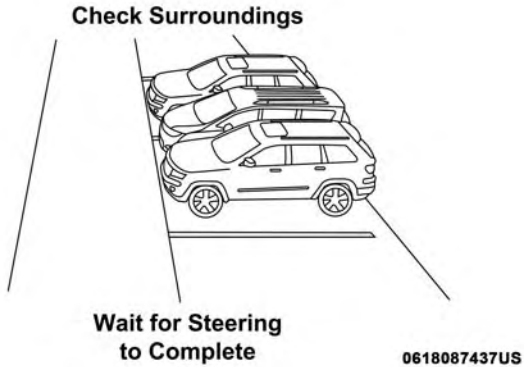

Check Surroundings — Wait For Steering To Complete

The system will then instruct the driver to check their surroundings and move forward.

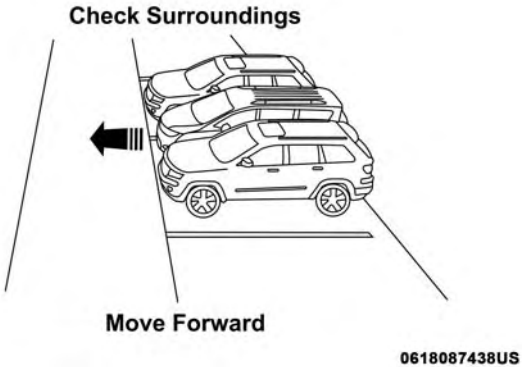

Check Surroundings — Move Forward

When the vehicle has reached the end of its forward movement, the system will instruct the driver to check their surroundings and stop the vehicle's movement.

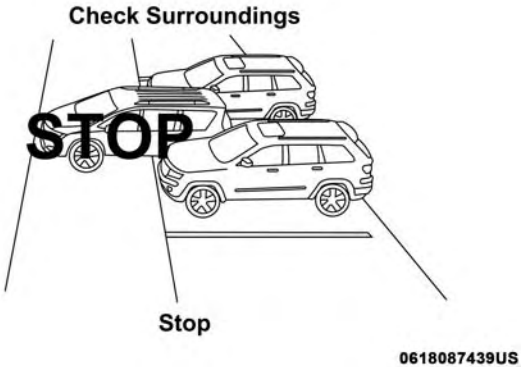

Check Surroundings — STOP

NOTE: It is the driver's responsibility to use the brake and stop the vehicle. The driver should check their surroundings and be prepared to stop the vehicle either when instructed to, or when driver intervention is required.

Once the vehicle is in a standstill condition, the driver will be instructed to place the gear selector into the REVERSE position.

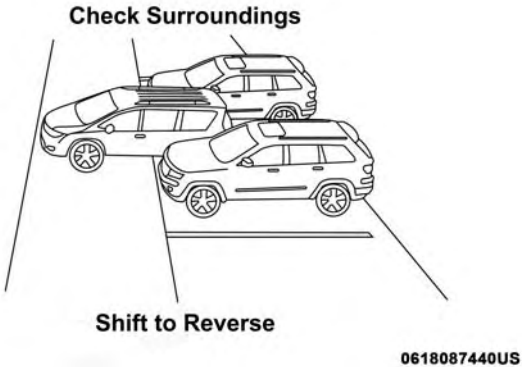

Check Surroundings — Shift To Reverse

When the driver places the gear selector into the REVERSE position, the system may instruct the driver to wait for steering to complete.

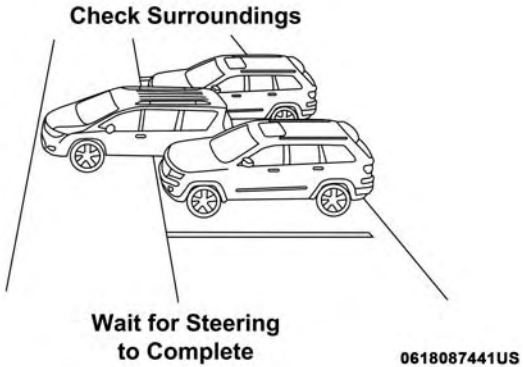

Check Surroundings — Wait For Steering To Complete

The system will then instruct the driver to check their surroundings and move backward.

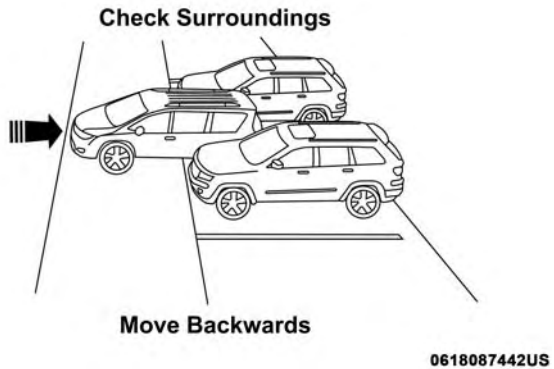

Check Surroundings — Move Backwards

Your vehicle is now in the perpendicular park position. When the maneuver is complete, the driver will be instructed to check the vehicle's parking position. If the driver is satisfied with the vehicle position, they should shift to PARK. The "Active ParkSense Complete - Check Parking Position" message will be momentarily displayed.

Active ParkSense Complete — Check Parking Position

WARNING!

Drivers must be careful when performing parallel or perpendicular parking maneuvers even when using the ParkSense Active Park Assist system. Always check carefully behind and in front of your vehicle, look behind and in front of you, and be sure to check for pedestrians, animals, other vehicles, obstructions,

(Continued)

WARNING! *(Continued)*

and blind spots before backing up and moving forward. You are responsible for safety and must continue to pay attention to your surroundings. Failure to do so can result in serious injury or death.

CAUTION!

- **The ParkSense Active Park Assist system is only a parking aid and it is unable to recognize every obstacle, including small obstacles. Parking curbs might be temporarily detected or not detected at all. Obstacles located above or below the sensors will not be detected when they are in close proximity.**
- **The vehicle must be driven slowly when using the ParkSense Active Park Assist system in order to be able to stop in time when an obstacle is detected. It is recommended that the driver looks over his/her shoulder when using the ParkSense Active Park Assist system.**

LANESENSE — IF EQUIPPED

LaneSense Operation

The LaneSense system is operational at speeds above 37 mph (60 km/h) and below 112 mph (180 km/h). It uses a forward looking camera to detect lane markings and measure vehicle position within the lane boundaries.

When both lane markings are detected and the driver unintentionally drifts out of the lane (no turn signal applied), the LaneSense system provides a haptic warning in the form of torque applied to the steering wheel to prompt the driver to remain within the lane boundaries. The LaneSense system will also provide a visual warning through the instrument cluster display to prompt the driver to remain within the lane boundaries.

The driver may manually override the haptic warning by applying torque into the steering wheel at any time.

When only a single lane marking is detected and the driver unintentionally drifts across that lane marking (no turn signal applied), the LaneSense system provides a visual warning through the instrument cluster display to prompt the driver to remain within the lane. When only a single lane marking is detected, a haptic (torque) warning will not be provided.

NOTE: When operating conditions have been met, the LaneSense system will monitor if the driver's hands are on the steering wheel and provides an audible and visual warning to the driver when the driver's hands are not detected on the steering wheel. The system will cancel if the driver does not return their hands to the wheel.

Turning LaneSense On Or Off

The LaneSense button is located on the switch panel below the Uconnect display.

To turn the LaneSense system on, push the LaneSense button (LED turns off). A "LaneSense On" message is shown in the instrument cluster display.

0617094650US

Lane Sense On Message

To turn the LaneSense system off, push the LaneSense button again (LED turns on).

NOTE: The LaneSense system will retain the last system state on or off from the last ignition cycle when the ignition is changed to the ON/RUN position.

LaneSense Warning Message

The LaneSense system will indicate the current lane drift condition through the instrument cluster display.

Instrument Cluster Display

When the LaneSense system is ON; the lane lines are gray when both of the lane boundaries have not been detected and the LaneSense telltale is solid white.

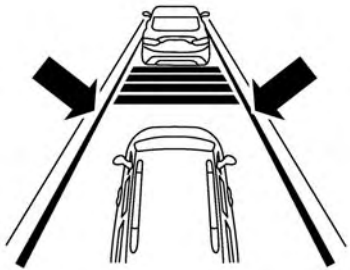

0329097717US

System ON (Gray Lines) With White Telltale

Left Lane Departure — Only Left Lane Detected

- When the LaneSense system is ON, the LaneSense Telltale is solid white only when the left lane marking has been detected and the system is ready to provide visual warnings in the instrument cluster display if an unintentional lane departure occurs on the left side.
- When the LaneSense system senses the lane has been approached and is in a lane departure situation, the visual warning in the instrument cluster display will show the left inside lane line flashing yellow (on/off), while the outside lane line on the left of the display will remain solid yellow. The LaneSense telltale changes from solid white to flashing yellow.

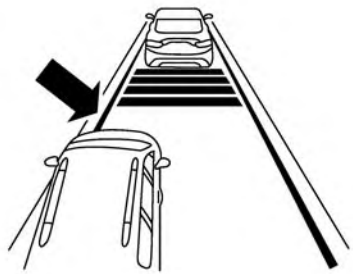

0329097716US

Lane Approached (Flashing Yellow Inside Line, Solid Yellow Outside Line/Flashing) With Yellow Telltale

NOTE: The LaneSense system operates with the similar behavior for a right lane departure when only the right lane marking has been detected.

Left Lane Departure — Both Lane Lines Detected

- When the LaneSense system is ON, the lane lines turn from gray to white. The LaneSense telltale is solid green when both lane markings have been detected and the system is "armed" to provide visual warnings in the instrument cluster display and a torque warning in the steering wheel if an unintentional lane departure occurs.

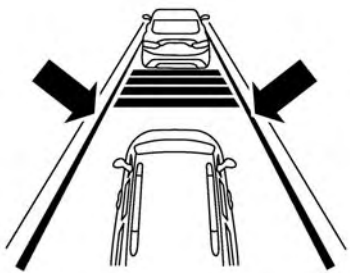

0329097717US

Lanes Sensed (White Lines) With Green Telltale

- When the LaneSense system senses a lane drift situation, the left inside and outside lane lines turn solid yellow. The LaneSense telltale changes from solid green to solid yellow. At this time torque is applied to the steering wheel in the opposite direction of the lane boundary.
- For example: If approaching the left side of the lane the steering wheel will turn to the right.

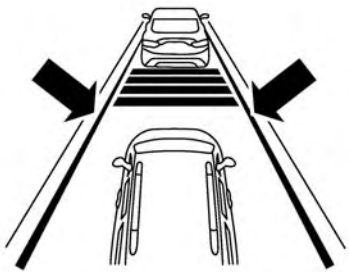

0329097717US

Lane Sensed (Solid Yellow Inside Line, Solid Yellow Outside Line) With Solid Yellow Telltale

- When the LaneSense system senses the lane has been approached and is in a lane departure situation, the left inside lane line flashes yellow (on/off) while the left

outside line remains solid yellow. The LaneSense telltale changes from solid yellow to flashing yellow. At this time torque is applied to the steering wheel in the opposite direction of the lane boundary.

- For example: If approaching the left side of the lane the steering wheel will turn to the right.

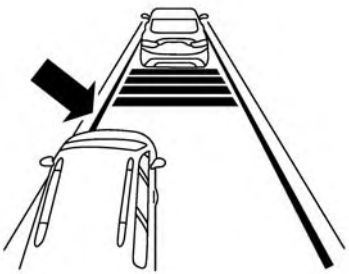

0329097716US

Lane Approached (Flashing Yellow Inside Line, Solid Yellow Outside Line) With Flashing Yellow Telltale

NOTE: The LaneSense system operates with the similar behavior for a right lane departure.

Changing LaneSense Status

The LaneSense system has settings to adjust the intensity of the torque warning and the warning zone sensitivity (Early/Medium/Late) that you can configure through the Uconnect system screen. Refer to "Uconnect Settings" in "Multimedia" for further information.

NOTE:

- When enabled the system operates above 37 mph (60 km/h) and below 112 mph (180 km/h).
- Use of the turn signal suppresses the warnings.
- The system will not apply torque to the steering wheel whenever a safety system engages (anti-lock brakes, traction control system, electronic stability control, forward collision warning, etc.).

PARKVIEW REAR BACK UP CAMERA

The ParkView Rear Back Up Camera allows you to see an on-screen image of the rear surroundings of your vehicle whenever the gear selector is put into REVERSE. The image will be displayed on the touchscreen display along with a caution note "Check Entire Surroundings" across the top of the screen. After five seconds, this note will

disappear. The ParkView Rear Back Up Camera is located on the rear of the vehicle above the rear license plate.

NOTE: The ParkView Rear Back Up Camera has programmable modes of operation that may be selected through the Uconnect System. Refer to "Uconnect Settings" in "Multimedia" for further information.

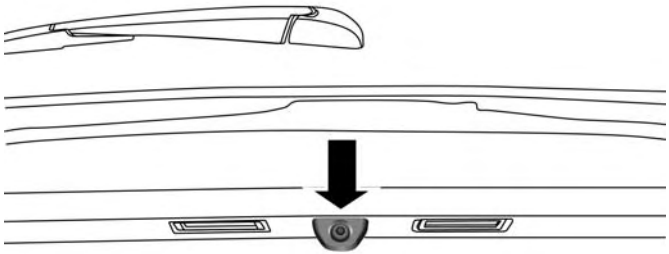

0306094454US

ParkView Camera Location

When the vehicle is shifted out of REVERSE (with camera delay turned off), the rear camera mode is exited and the navigation or audio screen appears again.

When the vehicle is shifted out of REVERSE (with camera delay turned on), the camera image will continue to be displayed for up to 10 seconds after shifting out of REVERSE unless the vehicle speed exceeds 8 mph (13 km/h), the vehicle is shifted into PARK or the ignition is switched to the OFF position.

A touch screen button to disable display of the camera image is made available when the vehicle is not in REVERSE gear. Display of the camera image after shifting out of REVERSE can be disabled via a touch screen button personalization entry in the camera settings menu.

When enabled, active guide lines are overlaid on the image to illustrate the width of the vehicle and its projected backup path based on the steering wheel position.

Different colored zones indicate the distance to the rear of the vehicle.

The following table shows the approximate distances for each zone:

Zone	Distance To The Rear Of The Vehicle
Red	0 - 1 ft (0 - 30 cm)
Yellow	1 ft - 6.5 ft (30 cm - 2 m)
Green	6.5 ft or greater (2 m or greater)

NOTE: If snow, ice, mud, or any foreign substance builds up on the camera lens, clean the lens, rinse with water, and dry with a soft cloth. Do not cover the lens.

WARNING!

Drivers must be careful when backing up even when using the ParkView Rear Back Up Camera. Always check carefully behind your vehicle, and be sure to check for pedestrians, animals, other vehicles, obstructions, or blind spots before backing up. You are responsible for the safety of your surroundings and must continue to pay attention while backing up. Failure to do so can result in serious injury or death.

CAUTION!

- **To avoid vehicle damage, ParkView should only be used as a parking aid. The ParkView camera is unable to view every obstacle or object in your drive path.**
- **To avoid vehicle damage, the vehicle must be driven slowly when using ParkView to be able to stop in time when an obstacle is seen. It is recommended that the driver look frequently over his/her shoulder when using ParkView.**

SURROUND VIEW CAMERA SYSTEM — IF EQUIPPED

Your vehicle may be equipped with the Surround View Camera System that allows you to see an on-screen image of the surroundings and top view of your vehicle whenever the gear selector is put into REVERSE or a different view is selected through the ″on screen soft buttons″. The top view of the vehicle will show which doors are open. The image will be displayed on the touchscreen display along with a caution note “Check Entire Surroundings” across the top of the screen. After five seconds, this note will disappear. The Surround View Camera System is comprised of four sequential cameras located in the front grille, rear liftgate and side mirrors.

NOTE: The Surround View Camera System has programmable settings that may be selected through the Uconnect System. Refer to “Uconnect Settings” in “Multimedia” for further information.

When the vehicle is shifted into REVERSE, the rear camera view and top view is the default view of the system.

When the vehicle is shifted out of REVERSE (with camera delay turned on), the camera image will continue to be displayed for up to 10 seconds after shifting out of REVERSE unless the vehicle speed exceeds 8 mph (13 km/h), the vehicle is shifted into PARK or the ignition is switched to the OFF position. There is a touch screen button (X) to disable the display of the camera image.

When the vehicle is shifted out of REVERSE (with camera delay turned off), the surround view camera mode is exited and the last known screen appears again.

When enabled, active guide lines are overlaid on the image to illustrate the width of the vehicle, including the side view mirrors and its projected backup path based on the steering wheel position.

Different colored zones indicate the distance to the rear of the vehicle.

The following table shows the approximate distances for each zone:

Zone	Distance To The Rear Of The Vehicle
Red	0 - 1 ft (0 - 30 cm)
Yellow	1 ft - 6.5 ft (30 cm - 2 m)
Green	6.5 ft or greater (2 m or greater)

Modes Of Operation

"Manual" activation of the Surround View camera is selected by pressing the Surround View Camera soft key located in the "Controls" screen within the Uconnect system.

Top View

The Top view will show in the Uconnect System with Rear View and Front View in a split view display. There is integrated ParkSense arcs in the image at the front and rear of the vehicle. The arcs will change color from yellow to red corresponding the distance zones to the oncoming object.

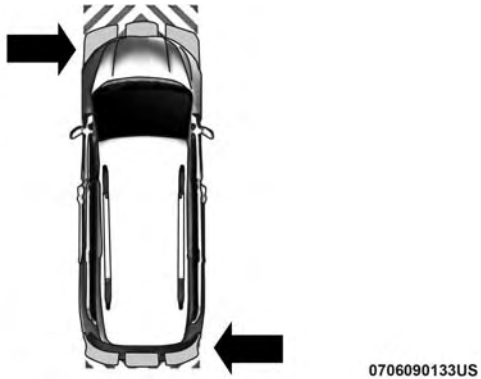

ParkSense Arcs

NOTE:

- Front tires will be in image when the tires are turned.
- Due to wide angle cameras in mirror, the image will appear distorted.
- Top view will show which sliding doors are open.
- Open front doors will remove outside image.

Rear View

This is the Default view of the system in REVERSE and is always paired with the Top view of the vehicle with optional active guide lines for the projected path when enabled.

Rear Cross Path View

Pressing the Rear Cross Path soft key will give the driver a wider angle view of the rear camera system. The Top view will be disabled when this is selected.

Front View

The Front view will show you what is immediately in front of the vehicle and is always paired with the Top view of the vehicle.

Front Cross Path View

Pressing the Front Cross Path soft key will give the driver a wider angle view of the front camera system. The Top view will be disabled when this is selected.

Deactivation

The system can be deactivated in the following conditions:

- The speed of the vehicle reaches greater than 8 mph (13 km/h).
- The vehicle shifted into PARK from a different gear.
- If the vehicle is in any gear other than REVERSE, press the “X” button.

- The camera delay system is turned off manually through the Uconnect settings menu. Refer to "Uconnect Settings" in "Multimedia" for further information.

NOTE:

- If snow, ice, mud, or any foreign substance builds up on the camera lenses, clean the lenses, rinse with water, and dry with a soft cloth. Do not cover the lenses.
- If a malfunction with the system has occurred, see your nearest authorized dealer.

WARNING!

Drivers must be careful when backing up even when using the Surround View Camera. Always check carefully behind your vehicle, and be sure to check for pedestrians, animals, other vehicles, obstructions, or blind spots before backing up. You are responsible for the safety of your surroundings and must continue to pay attention while backing up. Failure to do so can result in serious injury or death.

CAUTION!

- **To avoid vehicle damage, Surround View should only be used as a parking aid. The Surround View camera is unable to view every obstacle or object in your drive path.**
- **To avoid vehicle damage, the vehicle must be driven slowly when using Surround View to be able to stop in time when an obstacle is seen. It is recommended that the driver look frequently over his/her shoulder when using Surround View.**

REFUELING THE VEHICLE

There is no fuel filler cap. Two flapper doors inside the pipe seal the system.

WARNING!

- **Never have any smoking materials lit in or near the vehicle when the fuel door is open or the tank is being filled.**
- **Never add fuel when the engine is running. This is in violation of most state and federal fire regulations**

(Continued)

WARNING! *(Continued)*

and may cause the "Malfunction Indicator Light" to turn on.

- **A fire may result if fuel is pumped into a portable container that is inside of a vehicle. You could be burned. Always place fuel containers on the ground while filling.**

CAUTION!

To avoid fuel spillage and overfilling, do not "top off" the fuel tank after filling.

1. Put the vehicle in park and switch the ignition off.
2. Push the center-rear edge of the fuel filler door (3 o'clock position) and release to open.

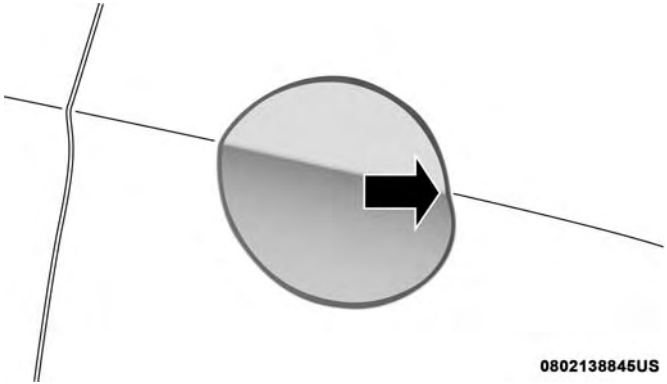

Fuel Filler Cap Latch

3. Insert the fuel nozzle fully into the filler pipe, the nozzle opens and holds both flapper doors while refueling.
4. When the fuel nozzle "clicks" or shuts off, the fuel tank is full.
5. Keep the nozzle in the filler for five seconds after nozzle clicks to allow fuel to drain from the nozzle.
6. Remove the fuel filler nozzle.
7. To close the fuel filler door, push the center-rear edge (3 o'clock position) of the fuel filler door and then release. The fuel filler door will latch closed.

NOTE:

- In certain cold conditions, ice may prevent the fuel filler door from opening. If this occurs, lightly push on the fuel filler door around the perimeter to break the ice build up.
- Take care to open both flappers with the funnel to avoid spills.

VEHICLE LOADING

Certification Label

As required by National Highway Traffic Safety Administration regulations, your vehicle has a certification label affixed to the driver's side door or pillar.

This label contains the month and year of manufacture, Gross Vehicle Weight Rating (GVWR), Gross Axle Weight Rating (GAWR) front and rear, and Vehicle Identification Number (VIN). A Month-Day-Hour (MDH) number is included on this label and indicates the Month, Day and Hour of manufacture. The bar code that appears on the bottom of the label is your VIN.

Gross Vehicle Weight Rating (GVWR)

The GVWR is the total permissible weight of your vehicle including driver, passengers, vehicle, options and cargo. The label also specifies maximum capacities of front and rear axle systems (GAWR). Total load must be limited so GVWR and front and rear GAWR are not exceeded.

Payload

The payload of a vehicle is defined as the allowable load weight a truck can carry, including the weight of the driver, all passengers, options and cargo.

Gross Axle Weight Rating (GAWR)

The GAWR is the maximum permissible load on the front and rear axles. The load must be distributed in the cargo area so that the GAWR of each axle is not exceeded.

Each axle GAWR is determined by the components in the system with the lowest load carrying capacity (axle, springs, tires or wheels). Heavier axles or suspension components sometimes specified by purchasers for increased durability does not necessarily increase the vehicle's GVWR.

Tire Size

The tire size on the Vehicle Certification Label represents the actual tire size on your vehicle. Replacement tires must be equal to the load capacity of this tire size.

Rim Size

This is the rim size that is appropriate for the tire size listed.

Inflation Pressure

This is the cold tire inflation pressure for your vehicle for all loading conditions up to full GAWR.

Curb Weight

The curb weight of a vehicle is defined as the total weight of the vehicle with all fluids, including vehicle fuel, at full capacity conditions, and with no occupants or cargo loaded into the vehicle. The front and rear curb weight values are determined by weighing your vehicle on a commercial scale before any occupants or cargo are added.

Loading

The actual total weight and the weight of the front and rear of your vehicle at the ground can best be determined by weighing it when it is loaded and ready for operation.

The entire vehicle should first be weighed on a commercial scale to insure that the GVWR has not been exceeded. The weight on the front and rear of the vehicle should then be determined separately to be sure that the load is properly distributed over the front and rear axle. Weighing the vehicle may show that the GAWR of either the front or rear axles has been exceeded but the total load is within the specified GVWR. If so, weight must be shifted from front to rear or rear to front as appropriate until the specified weight limitations are met. Store the heavier items down low and be sure that the weight is distributed equally. Stow all loose items securely before driving.

Improper weight distributions can have an adverse effect on the way your vehicle steers and handles and the way the brakes operate.

CAUTION!

Do not load your vehicle any heavier than the GVWR or the maximum front and rear GAWR. If you do, parts on your vehicle can break, or it can change the way your vehicle handles. This could cause you to lose control. Also overloading can shorten the life of your vehicle.

TRAILER TOWING

In this section you will find safety tips and information on limits to the type of towing you can reasonably do with your vehicle. Before towing a trailer, carefully review this information to tow your load as efficiently and safely as possible.

To maintain the New Vehicle Limited Warranty coverage, follow the requirements and recommendations in this manual concerning vehicles used for trailer towing.

Common Towing Definitions

The following trailer towing related definitions will assist you in understanding the following information:

Gross Vehicle Weight Rating (GVWR)

The GVWR is the total allowable weight of your vehicle. This includes driver, passengers, cargo and tongue weight. The total load must be limited so that you do not exceed the GVWR. Refer to "Vehicle Loading/Vehicle Certification Label" in "Starting And Operating" for further information.

Gross Trailer Weight (GTW)

The GTW is the weight of the trailer plus the weight of all cargo, consumables and equipment (permanent or temporary) loaded in or on the trailer in its "loaded and ready for operation" condition.

The recommended way to measure GTW is to put your fully loaded trailer on a vehicle scale. The entire weight of the trailer must be supported by the scale.

Gross Axle Weight Rating (GAWR)

The GAWR is the maximum capacity of the front and rear axles. Distribute the load over the front and rear axles evenly. Make sure that you do not exceed either front or rear GAWR. Refer to "Vehicle Loading/Vehicle Certification Label" in "Starting And Operating" for further information.

WARNING!

It is important that you do not exceed the maximum front or rear GAWR. A dangerous driving condition can result if either rating is exceeded. You could lose control of the vehicle and have a collision.

Tongue Weight (TW)

The tongue weight is the downward force exerted on the hitch ball by the trailer. You must consider this as part of the load on your vehicle.

Trailer Frontal Area

The frontal area is the maximum height multiplied by the maximum width of the front of a trailer.

Trailer Sway Control

The trailer sway control can be a mechanical telescoping link that can be installed between the hitch receiver and the trailer tongue that typically provides adjustable friction associated with the telescoping motion to dampen any unwanted trailer swaying motions while traveling.

If equipped, the electronic Trailer Sway Control (TSC) recognizes a swaying trailer and automatically applies individual wheel brakes and/or reduces engine power to attempt to eliminate the trailer sway.

Weight-Carrying Hitch

A weight-carrying hitch supports the trailer tongue weight, just as if it were luggage located at a hitch ball or some other connecting point of the vehicle. These kinds of hitches are the most popular on the market today and they are commonly used to tow small and medium sized trailers.

Weight-Distributing Hitch

A weight-distributing system works by applying leverage through spring (load) bars. They are typically used for heavier loads to distribute trailer tongue weight to the tow vehicle's front axle and the trailer axle(s). When used in accordance with the manufacturer's directions, it provides for a more level ride, offering more consistent steering and brake control thereby enhancing towing safety. The addition of a friction/hydraulic sway control also dampens sway caused by traffic and crosswinds and contributes positively to tow vehicle and trailer stability. Trailer sway control and a weight distributing (load equalizing) hitch are recommended for heavier Tongue Weights (TW) and may be required depending on vehicle and trailer configuration/loading to comply with Gross Axle Weight Rating (GAWR) requirements.

WARNING!

- **An improperly adjusted Weight Distributing Hitch system may reduce handling, stability, braking performance, and could result in a collision.**
- **Weight Distributing Systems may not be compatible with Surge Brake Couplers. Consult with your hitch and trailer manufacturer or a reputable Recreational Vehicle dealer for additional information.**

Trailer Hitch Classification

The following chart provides the industry standard for the maximum trailer weight a given trailer hitch class can tow and should be used to assist you in selecting the correct trailer hitch for your intended towing condition.

Trailer Hitch Classification Definitions	
Class	**Max. Trailer Hitch Industry Standards**
Class I - Light Duty	2,000 lbs (907 kg)
Class II - Medium Duty	3,500 lbs (1,587 kg)
Class III - Heavy Duty	5,000 lbs (2,267 kg)
Class IV - Extra Heavy Duty	10,000 lbs (4,535 kg)
Refer to the “Trailer Towing Weights (Maximum Trailer Weight Ratings)” chart for the Maximum Gross Trailer Weight (GTW) towable for your given drivetrain.	
All trailer hitches should be professionally installed on your vehicle.	

Trailer Towing Weights (Maximum Trailer Weight Ratings)

The following chart provides the maximum trailer weight ratings towable for your given drivetrain.

Engine/ Transmission	Trailer Tow Package	GCWR (Gross Combined Weight Rating)	Frontal Area	Max. GTW (Gross Trailer Weight)	Max. Tongue Weight
3.6L/Automatic	Yes	8,600 lbs (3,900 kg)	40 sq ft (3.72 sq m)	3,600 lbs (1,632 kg)	360 lbs (163 kg)
	No	6,500 lbs (2,948 kg)	40 sq ft (3.72 sq m)	1500 lbs (680 kg)	149 lbs (67 kg)
Refer to local laws for maximum trailer towing speeds.					

NOTE: The trailer tongue weight must be considered as part of the combined weight of occupants and cargo, and should never exceed the weight referenced on the Tire and Loading Information placard. Refer to “Tires” in “Servicing And Maintenance” for further information.

Vehicle Loading Chart

Follow these steps to determine the total weight the vehicle can carry.

1. Determine the cargo capacity of your vehicle.
   - Load Capacity = GVWR – Curb (weight of vehicle full fluids NO Occupants).
2. Determine occupant count.
   - For calculation purposes, average weight of an occupant is 150 lb (68 kg).

- GVWR = 6005 lbs (2723 kg)
- CURB = 4500 lbs (2041 kg)
- Load Capacity = GVWR – CURB = 6005 lbs (2723 kg) - 4500 lbs (2041 kg) = 1505 lbs (682 kg)

4 Occupants (at 150 lbs [68 kg]) + Max Trailer =

- 1505 lbs (682 kg) – 600 lbs (272 kg) (4 x 150 lbs [68 kg]) – 360 lbs (163 kg) (10% of 3600 lbs [1632 kg]) = 545 lbs (247 kg) of cargo in vehicle

EXAMPLE:

Number Of Persons / Weight Of Occupants	Max Cargo No Trailer	Tongue Load, Max Trailer	Max Cargo With Max Trailer 360 lb (136 kg) Tongue Load
2 People / 300 lbs (136) kg	**1205 lbs (546 kg)**	1205 lbs (546 kg) – 360 lbs (136 kg) = 845 lbs (383 kg)	**845 lbs (383 kg)**

Number Of Persons / Weight Of Occupants	Max Cargo No Trailer	Tongue Load, Max Trailer	Max Cargo With Max Trailer 360 lb (136 kg) Tongue Load
4 people / 600 lbs (272 kg)	**955 lbs (433 kg)**	955 lbs (433 kg) – 360 lbs (136 kg) = 545 lbs (247 kg)	**545 lbs (247 kg)**
7 people / 1050 lbs (476 kg)	**455 lbs (206 kg)**	455 lbs (206 kg) – 360 lbs (163 kg) = 95 lbs (43 kg)	**95 lbs (43 kg)**

- Make sure loading does not exceed GAWR of front or rear axles.
- GAWR is found on sticker in Driver's Side Door Jam.

Trailer And Tongue Weight

Never exceed the maximum tongue weight stamped on your bumper or trailer hitch.

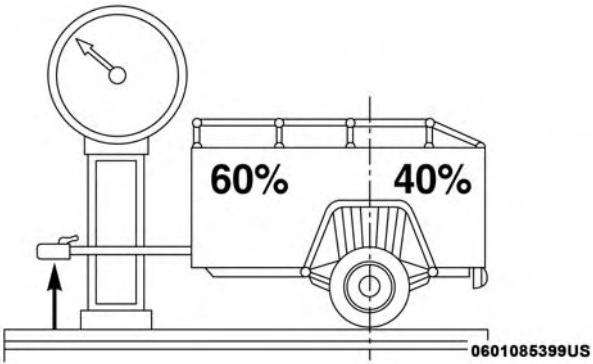

Weight Distribution

Consider the following items when computing the weight on the rear axle of the vehicle:

- The tongue weight of the trailer.
- The weight of any other type of cargo or equipment put in or on your vehicle.
- The weight of the driver and all passengers.

NOTE: Remember that everything put into or on the trailer adds to the load on your vehicle. Also, additional factory-installed options or dealer-installed options must be considered as part of the total load on your vehicle. Refer to the "Tire And Loading Information" placard for the maximum combined weight of occupants and cargo for your vehicle.

Towing Requirements

To promote proper break-in of your new vehicle drivetrain components, the following guidelines are recommended.

CAUTION!

- **Do not tow a trailer at all during the first 500 miles (805 km) the new vehicle is driven. The engine, axle or other parts could be damaged.**
- **Then, during the first 500 miles (805 km) that a trailer is towed, do not drive over 50 mph (80 km/h) and do not make starts at full throttle. This helps the engine and other parts of the vehicle wear in at the heavier loads.**

Perform the maintenance listed in the "Scheduled Servicing". Refer to "Scheduled Servicing" in "Servicing And

Maintenance" for the proper maintenance intervals. When towing a trailer, never exceed the GAWR or GCWR ratings.

WARNING!

Improper towing can lead to a collision. Follow these guidelines to make your trailer towing as safe as possible:

- **Make certain that the load is secured in the trailer and will not shift during travel. When trailering cargo that is not fully secured, dynamic load shifts can occur that may be difficult for the driver to control. You could lose control of your vehicle and have a collision.**
- **When hauling cargo or towing a trailer, do not overload your vehicle or trailer. Overloading can cause a loss of control, poor performance or damage to brakes, axle, engine, transmission, steering, suspension, chassis structure or tires.**
- **Safety chains must always be used between your vehicle and trailer. Always connect the chains to the hook retainers of the vehicle hitch. Cross the chains under the trailer tongue and allow enough slack for turning corners.**

(Continued)

WARNING! ***(Continued)***

- **Vehicles with trailers should not be parked on a grade. When parking, apply the parking brake on the tow vehicle. Put the tow vehicle transmission in PARK. For four-wheel drive vehicles, make sure the transfer case is not in NEUTRAL. Always, block or "chock" the trailer wheels.**
- **GCWR must not be exceeded.**
- **Total weight must be distributed between the tow vehicle and the trailer such that the following four ratings are not exceeded:**

  1. GVWR

  2. GTW

  3. GAWR

  4. Tongue weight rating for the trailer hitch utilized.

Towing Requirements — Tires

- Do not attempt to tow a trailer while using a compact spare tire.
- Do not drive more than 50 mph (80 km/h) when towing while using a full size spare tire.

- Proper tire inflation pressures are essential to the safe and satisfactory operation of your vehicle. Refer to "Tires" in "Servicing And Maintenance" for proper tire inflation procedures.
- Check the trailer tires for proper tire inflation pressures before trailer usage.
- Check for signs of tire wear or visible tire damage before towing a trailer. Refer to "Tires" in "Servicing And Maintenance" for the proper inspection procedure.
- When replacing tires, refer to "Tires" in "Servicing And Maintenance" for the proper tire replacement procedures. Replacing tires with a higher load carrying capacity will not increase the vehicle's GVWR and GAWR limits.

Towing Requirements — Trailer Brakes

- Do **not** interconnect the hydraulic brake system or vacuum system of your vehicle with that of the trailer. This could cause inadequate braking and possible personal injury.
- An electronically actuated trailer brake controller is required when towing a trailer with electronically actuated brakes. When towing a trailer equipped with a hydraulic surge actuated brake system, an electronic brake controller is not required.
- Trailer brakes are recommended for trailers over 1,000 lbs (453 kg) and required for trailers in excess of 2,000 lbs (907 kg).

WARNING!

- **Do not connect trailer brakes to your vehicle's hydraulic brake lines. It can overload your brake system and cause it to fail. You might not have brakes when you need them and could have an accident.**
- **Towing any trailer will increase your stopping distance. When towing, you should allow for additional space between your vehicle and the vehicle in front of you. Failure to do so could result in an accident.**

CAUTION!

If the trailer weighs more than 1,000 lbs (453 kg) loaded, it should have its own brakes and they should be of adequate capacity. Failure to do this could lead to accelerated brake lining wear, higher brake pedal effort, and longer stopping distances.

Towing Requirements — Trailer Lights And Wiring

Whenever you pull a trailer, regardless of the trailer size, stoplights and turn signals on the trailer are required for motoring safety.

The Trailer Tow Package may include a four- and seven-pin wiring harness. Use a factory approved trailer harness and connector.

NOTE: Do not cut or splice wiring into the vehicle's wiring harness.

The electrical connections are all complete to the vehicle but you must mate the harness to a trailer connector. Refer to the following illustrations.

NOTE:

- Disconnect trailer wiring connector from the vehicle before launching a boat (or any other device plugged into vehicle's electrical connect) into water.
- Be sure to reconnect once clear from water area.

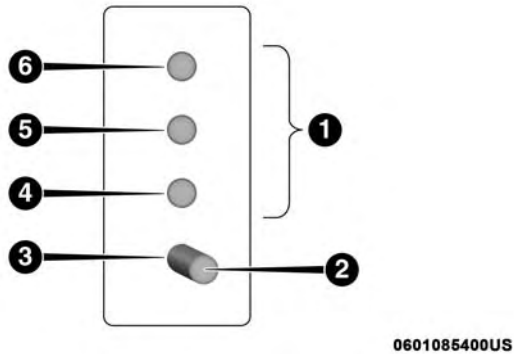

Four-Pin Connector

1 — Female Pins	4 — Park
2 — Male Pin	5 — Left Stop/Turn
3 — Ground	6 — Right Stop/Turn

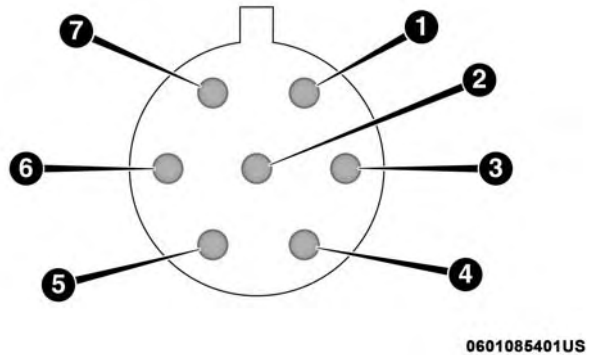

Seven-Pin Connector

1 — Battery
2 — Backup Lamps
3 — Right Stop/Turn
4 — Electric Brakes
5 — Ground
6 — Left Stop/Turn
7 — Running Lamps

Towing Tips

Before setting out on a trip, practice turning, stopping, and backing up the trailer in an area located away from heavy traffic.

Automatic Transmission

Select the DRIVE range when towing. The transmission controls include a drive strategy to avoid frequent shifting when towing. For increased engine braking on steep downhill grades, select the LOW range.

Speed Control — If Equipped

- Do not use on hilly terrain or with heavy loads.
- When using the speed control, if you experience speed drops greater than 10 mph (16 km/h), disengage until you can get back to cruising speed.
- Use speed control in flat terrain and with light loads to maximize fuel efficiency.

Cooling System

To reduce potential for engine and transmission overheating, take the following actions:

City Driving

- In city traffic — while stopped, place the transmission in NEUTRAL, but do not increase engine idle speed.

Highway Driving

- Reduce speed.
- Temporarily turn off air conditioning.

RECREATIONAL TOWING (BEHIND MOTORHOME, ETC.)

Towing This Vehicle Behind Another Vehicle

Towing Condition	Wheel OFF The Ground	All Models
Flat Tow	NONE	**NOT ALLOWED**
Dolly Tow	Front	OK
	Rear	**NOT ALLOWED**
On Trailer	ALL	OK

NOTE:

- To avoid inadvertent Electric Park Brake engagement, you must ensure that the Auto Park Brake feature is disabled before towing this vehicle (if rear wheels are on the ground). The Auto Park Brake feature is enabled or disabled via the customer programmable features in the Uconnect Settings.
- When towing your vehicle, always follow applicable state and provincial laws. Contact state and provincial Highway Safety offices for additional details.
- If your vehicle is disabled and in need of commercial towing service, please refer to “Towing A Disabled Vehicle” in “In Case Of Emergency”.

Recreational Towing — All Models

DO NOT flat tow this vehicle. Damage to the drivetrain will result.

CAUTION!

- **DO NOT flat tow this vehicle. Damage to the drivetrain will result. If this vehicle requires towing, make sure the drive wheels are OFF the ground.**
- **Ensure that the Electric Park Brake is released, and remains released, while being towed.**
- **Towing this vehicle in violation of the above requirements can cause severe transmission damage. Damage from improper towing is not covered under the New Vehicle Limited Warranty.**

Recreational towing is allowed ONLY if the front wheels are **OFF** the ground. This may be accomplished using a tow dolly (front wheels off the ground) or vehicle trailer (all four wheels off the ground). If using a tow dolly, follow this procedure:

1. Properly secure the dolly to the tow vehicle, following the dolly manufacturer's instructions.
2. Drive the front wheels onto the tow dolly.
3. Apply the park brake.
4. Place the transmission in PARK.
5. Turn the ignition OFF.
6. Properly secure the front wheels to the dolly, following the dolly manufacturer's instructions.
7. Turn the ignition to the ON/RUN mode, but do not start the vehicle.
8. Press and hold the brake pedal.
9. Release the park brake.
10. Turn the ignition OFF.
11. Release the brake pedal.

DRIVING TIPS

Driving On Slippery Surfaces

Information in this section will aid in safe controlled launches in adverse conditions.

Acceleration

Rapid acceleration on snow covered, wet, or other slippery surfaces may cause the driving wheels to pull erratically to the right or left. This phenomenon occurs when there is a

difference in the surface traction under the front (driving) wheels.

WARNING!

Rapid acceleration on slippery surfaces is dangerous. Unequal traction can cause sudden pulling of the front wheels. You could lose control of the vehicle and possibly have a collision. Accelerate slowly and carefully whenever there is likely to be poor traction (ice, snow, wet, mud, loose sand, etc.).

Traction

When driving on wet or slushy roads, it is possible for a wedge of water to build up between the tire and road surface. This is hydroplaning and may cause partial or complete loss of vehicle control and stopping ability. To reduce this possibility, the following precautions should be observed:

- Slow down during rainstorms or when the roads are slushy.
- Slow down if the road has standing water or puddles.
- Replace the tires when tread wear indicators first become visible.
- Keep tires properly inflated.
- Maintain sufficient distance between your vehicle and the vehicle in front of you to avoid a collision in a sudden stop.

Driving Through Water

Driving through water more than a few inches/centimeters deep will require extra caution to ensure safety and prevent damage to your vehicle.

Flowing/Rising Water

WARNING!

Do not drive on or across a road or path where water is flowing and/or rising (as in storm run-off). Flowing water can wear away the road or path's surface and cause your vehicle to sink into deeper water. Furthermore, flowing and/or rising water can carry your vehicle away swiftly. Failure to follow this warning may result in injuries that are serious or fatal to you, your passengers, and others around you.

Shallow Standing Water

Although your vehicle is capable of driving through shallow standing water, consider the following Cautions and Warnings before doing so.

WARNING!

- **Driving through standing water limits your vehicle's traction capabilities. Do not exceed 5 mph (8 km/h) when driving through standing water.**
- **Driving through standing water limits your vehicle's braking capabilities, which increases stopping distances. Therefore, after driving through standing water, drive slowly and lightly press on the brake pedal several times to dry the brakes.**
- **Failure to follow these warnings may result in injuries that are serious or fatal to you, your passengers, and others around you.**

CAUTION!

- **Always check the depth of the standing water before driving through it. Never drive through standing**

(Continued)

CAUTION! ***(Continued)***

water that is deeper than the bottom of the tire rims mounted on the vehicle.

- **Determine the condition of the road or the path that is under water and if there are any obstacles in the way before driving through the standing water.**
- **Do not exceed 5 mph (8 km/h) when driving through standing water. This will minimize wave effects.**
- **Driving through standing water may cause damage to your vehicle's drivetrain components. Always inspect your vehicle's fluids (i.e., engine oil, transmission, axle, etc.) for signs of contamination (i.e., fluid that is milky or foamy in appearance) after driving through standing water. Do not continue to operate the vehicle if any fluid appears contaminated, as this may result in further damage. Such damage is not covered by the New Vehicle Limited Warranty.**
- **Getting water inside your vehicle's engine can cause it to lock up and stall out, and cause serious internal damage to the engine. Such damage is not covered by the New Vehicle Limited Warranty.**

IN CASE OF EMERGENCY

CONTENTS

- HAZARD WARNING FLASHERS 443
- ASSIST AND SOS MIRROR — IF EQUIPPED 443
- BULB REPLACEMENT 449
  - Replacement Bulbs 449
  - Replacing Exterior Bulbs 451
- FUSES 456
  - General Information 456
  - Fuse Location 457
  - Underhood Fuses 457
- JACKING AND TIRE CHANGING — IF EQUIPPED 466
  - Jack And Spare Tire Location 466
  - Equipment Removal 467
  - Preparations For Jacking 467
  - Jacking Instructions 468
  - Road Tire Installation 474
  - Portable Air Compressor — If Equipped. 476
  - Tire Service Kit For Inflating Tire — If Equipped 479
  - Return Inflatable Spare Tire. 484
- TIRE SERVICE KIT — IF EQUIPPED 484
- JUMP STARTING 495
  - Preparations For Jump Start 496
  - Jump Starting Procedure. 497
- REFUELING IN EMERGENCY 499
- IF YOUR ENGINE OVERHEATS 499

■ MANUAL PARK RELEASE 500
■ FREEING A STUCK VEHICLE 501
■ TOWING A DISABLED VEHICLE 503
■ ENHANCED ACCIDENT RESPONSE SYSTEM (EARS) 505
■ EVENT DATA RECORDER (EDR) 506

HAZARD WARNING FLASHERS

The Hazard Warning flasher switch is located in the lower center area of the instrument panel.

Push the switch to turn on the Hazard Warning flasher. When the switch is activated, all directional turn signals will flash on and off to warn oncoming traffic of an emergency. Push the switch a second time to turn off the Hazard Warning flashers.

This is an emergency warning system and it should not be used when the vehicle is in motion. Use it when your vehicle is disabled and it is creating a safety hazard for other motorists.

When you must leave the vehicle to seek assistance, the Hazard Warning flashers will continue to operate even though the ignition is placed in the OFF position.

NOTE: With extended use, the Hazard Warning flashers may wear down your battery.

ASSIST AND SOS MIRROR — IF EQUIPPED

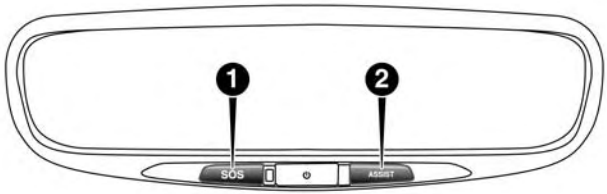

0310119905US

Assist And SOS Mirror

1 — SOS Button
2 — ASSIST Button

If equipped, the rearview mirror contains an ASSIST and a SOS button.

WARNING!

ALWAYS obey traffic laws and pay attention to the road. ALWAYS drive safely with your hands on the steering wheel. You have full responsibility and assume all risks related to the use of the features and applications in this vehicle. Only use the features and applications when it is safe to do so. Failure to do so may result in an accident involving serious injury or death.

NOTE:

- Your vehicle may be transmitting data as authorized by the subscriber.
- The SOS and ASSIST buttons will only function if you are connected to an operable LTE (voice/data) or 4G (data) network. Other Uconnect services will only be operable if your SiriusXM Guardian service is active and you are connected to an operable LTE (voice/data) or 4G (data) network.

ASSIST Call

The ASSIST Button is used to automatically connect you to any one of the following support centers:

- Roadside Assistance – If you get a flat tire, or need a tow, just push the ASSIST button and you will be connected to a representative for assistance. Roadside Assistance will know what vehicle you're driving and its location. Additional fees may apply for roadside assistance.
- SiriusXM Guardian Customer Care – In-vehicle support for SiriusXM Guardian.
- Vehicle Customer Care – Total support for all other vehicle issues.

SOS Call

1. Push the SOS Call button on the Rearview Mirror.

NOTE: In case the SOS Call button is pushed in error, there will be a ten second delay before the SOS Call system initiates a call to a SOS operator. To cancel the SOS Call connection, push the SOS call button on the Rearview Mirror or press the cancellation button on the Device Screen. Termination of the SOS Call will turn off the green LED light on the Rearview Mirror.

2. The LED light located between the ASSIST and SOS buttons on the Rearview Mirror will turn green once a connection to a SOS operator has been made.

3. Once a connection between the vehicle and a SOS operator is made, the SOS Call system may transmit the following important vehicle information to a SOS operator:
   - Indication that the occupant placed a SOS Call.
   - The vehicle brand.
   - The last known GPS coordinates of the vehicle.

4. You should be able to speak with the SOS operator through the vehicle audio system to determine if additional assistance is needed.

WARNING!

ALWAYS obey traffic laws and pay attention to the road. ALWAYS drive safely with your hands on the steering wheel. You have full responsibility and assume all risks related to the use of the features and applications in this vehicle. Only use the features and

(Continued)

WARNING! *(Continued)*

applications when it is safe to do so. Failure to do so may result in an accident involving serious injury or death.

NOTE:

- Your vehicle may be transmitting data as authorized by the subscriber.
- Once a connection is made between the vehicle's SOS Call system and the SOS operator, the SOS operator may be able to open a voice connection with the vehicle to determine if additional assistance is needed. Once the SOS operator opens a voice connection with the vehicle's SOS Call system, the operator should be able to speak with you or other vehicle occupants and hear sounds occurring in the vehicle. The vehicle's SOS Call system will attempt to remain connected with the SOS operator until the SOS operator terminates the connection.

5. The SOS operator may attempt to contact appropriate emergency responders and provide them with important vehicle information and GPS coordinates.

WARNING!

- **If anyone in the vehicle could be in danger (e.g., fire or smoke is visible, dangerous road conditions or location), do not wait for voice contact from an Emergency Services Agent. All occupants should exit the vehicle immediately and move to a safe location.**
- **Never place anything on or near the vehicle's operable network and GPS antennas. You could prevent operable network and GPS signal reception, which can prevent your vehicle from placing an emergency call. An operable network and GPS signal reception is required for the SOS Call system to function properly.**
- **The SOS Call system is embedded into the vehicle's electrical system. Do not add aftermarket electrical equipment to the vehicle's electrical system. This may prevent your vehicle from sending a signal to initiate an emergency call. To avoid interference that can cause the SOS Call system to fail, never add aftermarket equipment (e.g., two-way mobile radio, CB radio, data recorder, etc.) to your vehicle's electrical system or modify the antennas on your vehicle. IF YOUR VEHICLE LOSES BATTERY POWER FOR**

(Continued)

WARNING! *(Continued)*

ANY REASON (INCLUDING DURING OR AFTER AN ACCIDENT), THE UCONNECT FEATURES, APPS AND SERVICES, AMONG OTHERS, WILL NOT OPERATE.

- **Modifications to any part of the SOS Call system could cause the air bag system to fail when you need it. You could be injured if the air bag system is not there to help protect you.**

SOS Call System Limitations

Vehicles sold in Mexico **DO NOT** have SOS Call system capabilities.

SOS or other emergency line operators in Mexico may not answer or respond to SOS system calls.

If the SOS Call system detects a malfunction, any of the following may occur at the time the malfunction is detected, and at the beginning of each ignition cycle:

- The Rearview Mirror light located between the ASSIST and SOS buttons will continuously be illuminated red.
- The Device Screen will display the following message "Vehicle device requires service. Please contact your dealer."

- An In-Vehicle Audio message will state "Vehicle device requires service. Please contact your dealer."

WARNING!

- **Ignoring the Rearview Mirror light could mean you will not have SOS Call services. If the Rearview Mirror light is illuminated, have your authorized dealer service the SOS Call system immediately.**
- **The Occupant Restraint Control module turns on the air bag Warning Light on the instrument panel if a malfunction in any part of the system is detected. If the Air Bag Warning Light is illuminated, have your authorized dealer service the Occupant Restraint Control system immediately.**

Even if the SOS Call system is fully functional, factors beyond FCA US LLC's control may prevent or stop the SOS Call system operation. These include, but are not limited to, the following factors:

- Delayed accessories mode is active.
- The ignition is in the OFF position.
- The vehicle's electrical systems are not intact.
- The SOS Call system software and/or hardware are damaged during a crash.
- The vehicle battery loses power or becomes disconnected during a vehicle crash.
- LTE (voice/data) or 4G (data) network and/or Global Positioning Satellite signals are unavailable or obstructed.
- Equipment malfunction at the SOS operator facility.
- Operator error by the SOS operator.
- LTE (voice/data) or 4G (data) network congestion.
- Weather.
- Buildings, structures, geographic terrain, or tunnels.

WARNING!

ALWAYS obey traffic laws and pay attention to the road. ALWAYS drive safely with your hands on the steering wheel. You have full responsibility and assume all risks related to the use of the features and

(Continued)

WARNING! *(Continued)*

applications in this vehicle. Only use the features and applications when it is safe to do so. Failure to do so may result in an accident involving serious injury or death.

NOTE:

- Your vehicle may be transmitting data as authorized by the subscriber.
- Never place anything on or near the vehicle's LTE (voice/data) or 4G (data) and GPS antennas. You could prevent LTE (voice/data) or 4G (data) and GPS signal reception, which can prevent your vehicle from placing an emergency call. An operable LTE (voice/data) or 4G (data) network connection and a GPS signal is required for the SOS Call system to function properly.

General Information

This device complies with Part 15 of the FCC Rules. Operation is subject to the following two conditions: (1) This device may not cause harmful interference, and (2) this device must accept any interference received, including interference that may cause undesired operation.

NOTE: Changes or modifications not expressly approved by the party responsible for compliance could void the user's authority to operate the equipment.

CAUTION!

To avoid damage to the mirror during cleaning, never spray any cleaning solution directly onto the mirror. Apply the solution onto a clean cloth and wipe the mirror clean.

BULB REPLACEMENT

Replacement Bulbs

Interior Bulbs

Lamps	Bulb Number
Center & Rear Dome Lamp	LED (Serviced At Authorized Dealer)
Center & Rear Reading Lamps	LED (Serviced At Authorized Dealer)
Front Door Courtesy Lamp	LED (Serviced At Authorized Dealer)
Front Header Reading Lamps – If Equipped	LED (Serviced At Authorized Dealer)
Instrument Cluster Lamps	LED (Serviced At Authorized Dealer)
Liftgate Lamp(s)	LED (Serviced At Authorized Dealer)
Overhead Console Reading Lamps	LED (Serviced At Authorized Dealer)
Removable Console Lamp – If Equipped	LED (Serviced At Authorized Dealer)
Visor Vanity Lamps	6501966

Exterior Bulbs

Lamps	Bulb Number
High Intensity Discharge Headlamp	Low Beam - D3S High Beam - 9005LL
Halogen Headlamp	Reflector Low Beam - H11LL Projector Halogen Low Beam - 9005HL+ All High Beams - 9005LL

Lamps	Bulb Number
Dedicated Daytime Running Lamp (If Equipped)	LED (Serviced at Authorized Dealer)
Front Turn Signal Lamp	PWY24WNA (If Halogen Headlamp Equipped) PWY24WSV (If HID Headlamp Equipped)
Side Marker Lamp	W3W
Front Park Lamp	PWY24WNA (If Bulb Equipped) LED (Serviced At Authorized Dealer)
Front Fog Lamp	H11LL
LED Front Fog Lamp	LED (Serviced At Authorized Dealer)
Center High Mounted Stop (CHMSL) Lamp	LED (Serviced At Authorized Dealer)
Stop/Turn Signal Lamp	W21/5WLL
Rear Tail/Side Marker Lamp	Rear Tail - Body Side - W21/5WLL (If Bulb Equipped); LED (Serviced at Authorized Dealer) Rear Tail - Liftgate - W5WLL (If Bulb Equipped); LED (Serviced at Authorized Dealer) Rear Side Marker: W3W
Backup Lamp	W21W
License Lamp	LED (Serviced At Authorized Dealer)

Replacing Exterior Bulbs

High Intensity Discharge (HID) Headlamps — If Equipped

The headlamps contain a type of high voltage discharge light source. High voltage can remain in the circuit even with the headlamp switch off. Because of this, you should not attempt to service a HID headlamp light source yourself. If an HID headlamp light source fails, take your vehicle to an authorized dealer for service.

NOTE: On vehicles equipped with HID headlamps, when the headlamps are turned on, there is a blue hue to the lights. This diminishes and becomes more white after approximately 10 seconds, as the system charges.

WARNING!

A transient high voltage occurs at the bulb sockets of HID headlamps when the headlamp switch is turned ON. It may cause serious electrical shock or electrocution if not serviced properly. See your authorized dealer for service.

Halogen Headlamps

1. Reach behind the headlamp housing to access the headlamp bulb cap.
2. Firmly grasp the headlamp bulb cap and rotate it counterclockwise to unlock it.

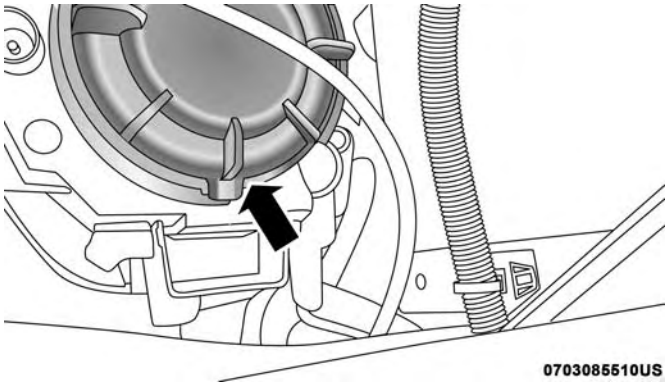

Headlamp Bulb Cap

3. Firmly grasp the headlamp bulb socket assembly and rotate counterclockwise to remove from the housing.

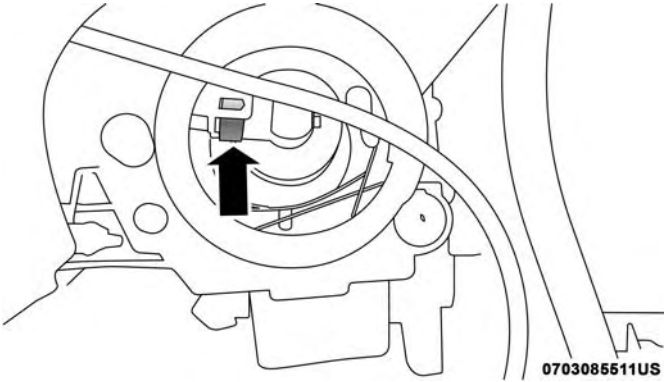

Headlamp Bulb Socket

4. Disconnect the bulb from the electrical connector and then connect the replacement bulb.

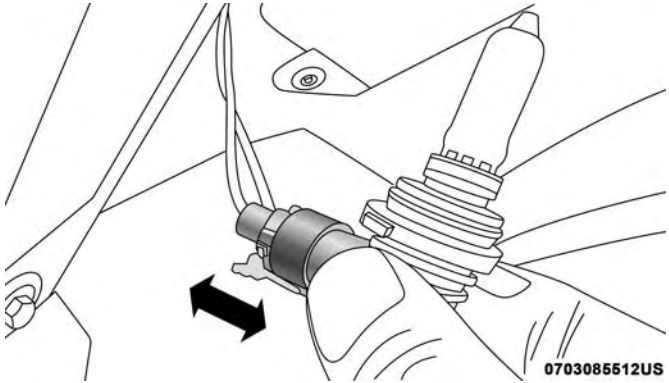

Headlamp Bulb

CAUTION!

Do not touch the new bulb with your fingers. Oil contamination will severely shorten bulb life. If the bulb comes in contact with any oily surface, clean the bulb with rubbing alcohol.

5. Install the bulb and connector assembly into the headlamp housing and rotate clockwise to lock it in place.

6. Install the headlamp bulb cap in the headlamp housing and rotate clockwise to lock it in place.

Front Turn Signal Lamp

1. Open the hood.
2. Twist the front turn signal lamp socket assembly counterclockwise, and then remove the front turn signal lamp assembly from the lamp housing.

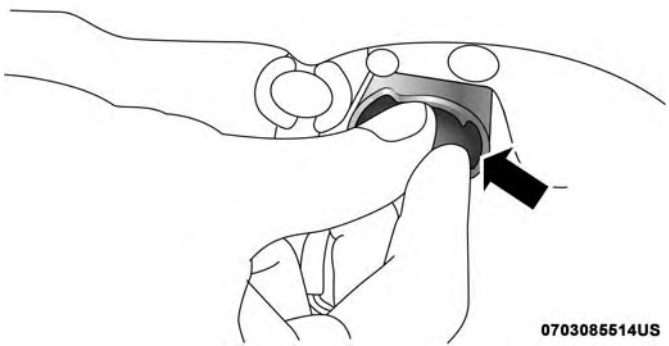

Front Turn Signal Lamp Socket

3. Pull the bulb out of the socket and insert the replacement bulb.
4. Install the front turn signal lamp socket assembly into the housing, and rotate the front turn signal lamp socket clockwise to lock it in place.

Front And Rear Side Marker Lamps

1. Remove the three fasteners from the inner wheel liner and carefully peel back liner for access.

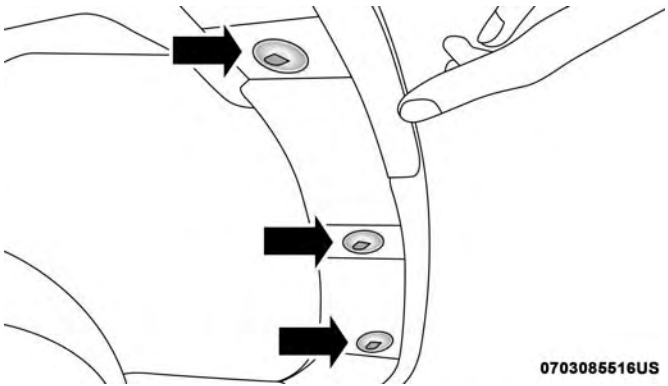

Inner Wheel Liner Fasteners

2. Firmly grasp the front side marker lamp socket and rotate 1/4 turn counterclockwise to remove it from the lamp assembly.

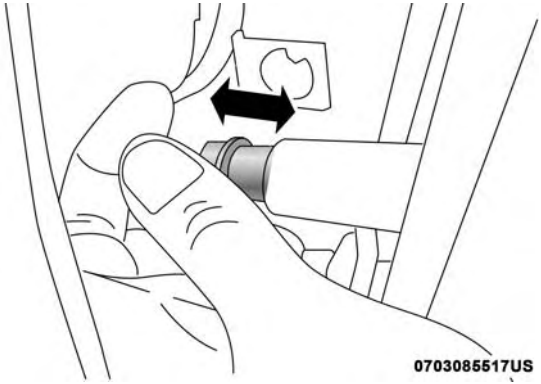

Front Side Marker Lamp Bulb Removal

3. Remove bulb from the front side marker lamp socket and replace with a new bulb.
4. Install front side marker lamp socket in lamp assembly and rotate 1/4 turn clockwise to lock into place.
5. Position the inner wheel liner in place and install the three fasteners.

Front Fog Lamp — Halogen

1. Remove fasteners from inner wheel liner and carefully peel back liner for access.
2. Reach through the front fascia to fog lamp housing to access the bulb.
3. Rotate the front fog lamp bulb counterclockwise, and remove the bulb from the front fog lamp housing.

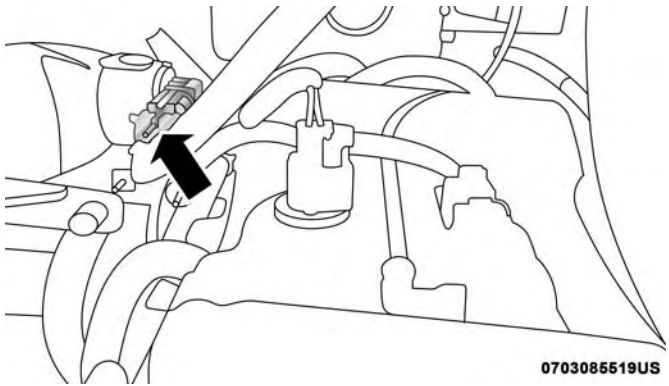

Front Fog Lamp Socket

4. Disconnect the bulb from the electrical connector and then connect the replacement bulb.

CAUTION!

Do not touch the new bulb with your fingers. Oil contamination will severely shorten bulb life. If the bulb comes in contact with any oily surface, clean the bulb with rubbing alcohol.

5. Install the front fog lamp bulb into the front fog lamp housing, and rotate the bulb clockwise to lock it in place.
6. Position the inner wheel liner in place and install fasteners.

Rear Liftgate Mounted Back-Up Lamps And Tail Lamps (If Bulb Equipped)

1. Raise the liftgate.
2. Use a fiber stick or flat blade screw driver to pry off the bulb access cover on the lower liftgate trim.
3. Back-up lamps/tail lamp (if bulb equipped) are now visible. Rotate socket(s) counter clockwise.
4. Remove/replace bulb(s).
5. Reinstall the socket(s)
6. Reverse process to reinstall the liftgate trim.

Rear Bodyside Mounted Taillamps

1. Raise the liftgate.
2. Remove two torx head screws on bodyside lamp using a T30 screwdriver.
3. Remove lamp from vehicle body and locate bulb socket on rear of lamp. Rotate socket counter-clockwise.
4. Remove/replace bulb(s).
5. Reinstall the socket(s)
6. Reverse process to reinstall the lamp onto vehicle.

Center High-Mounted Stop Lamp (CHMSL)

The center high-mounted stop lamp is an LED assembly. See your authorized dealer for replacement.

Rear License Lamp

The rear license lamps are LED. See your authorized dealer for replacement.

FUSES

WARNING!

- **When replacing a blown fuse, always use an appropriate replacement fuse with the same amp rating as the original fuse. Never replace a fuse with another fuse of higher amp rating. Never replace a blown fuse with metal wires or any other material. Do not place a fuse inside a circuit breaker cavity or vice versa. Failure to use proper fuses may result in serious personal injury, fire and/or property damage.**
- **Before replacing a fuse, make sure that the ignition is off and that all the other services are switched off and/or disengaged.**
- **If the replaced fuse blows again, contact an authorized dealer.**
- **If a general protection fuse for safety systems (air bag system, braking system), power unit systems (engine system, transmission system) or steering system blows, contact an authorized dealer.**

General Information

The fuses protect electrical systems against excessive current.

When a device does not work, you must check the fuse element inside the blade fuse for a break/melt.

Also, please be aware that when using power outlets for extended periods of time with the engine off may result in vehicle battery discharge.

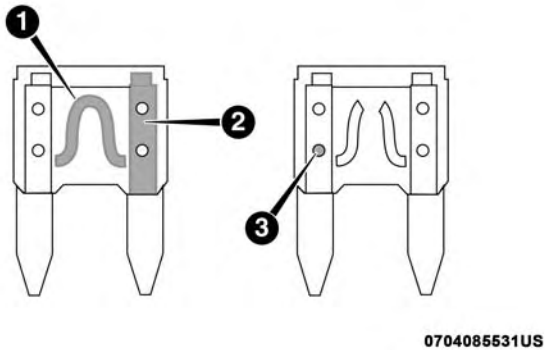

Blade Fuses

1 — Fuse Element
2 — Blade Fuse with a good/functional fuse element.
3 — Blade fuse with a NOT functional / BAD fuse element (blown fuse).

Fuse Location

The fuses are grouped into a controller located in the engine compartment.

Underhood Fuses

The Power Distribution Center is located in the engine compartment near the battery. This center contains cartridge fuses, mini-fuses, micro-fuses, circuit breakers and relays. A label that identifies each component is printed on the inside of the cover.

Before any procedure is done on the PDC, make sure engine is turned off.

Remove the cover by unlatching the two locks located at each side of the PDC cover, avoid the usage of screw drivers or any other tool to remove the cover, since they may apply excessive force and result in a broken/damaged part.

After service is done, secure the cover with its two locks.

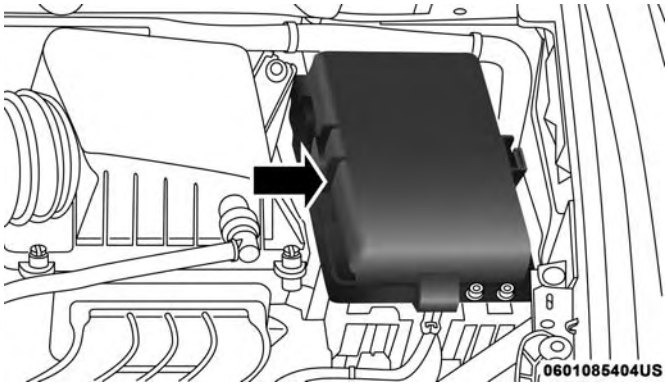

Power Distribution Center

Cavity	Cartridge Fuse	Blade Fuse	Description
F06	–	–	Not Used
F07	–	25 Amp Clear	Ignition Coil/Fuel Injector
F08	–	–	Not Used
F09	–	25 Amp Clear	Amplifier/ANC

Cavity	Cartridge Fuse	Blade Fuse	Description
F10	–	–	Not Used
F11	–	–	Not Used
F12	–	5 Amp Tan	Battery Sensor (IBS)
F13	–	10 Amp Red	ECM (ESS Only)
F14	–	10 Amp Red	ECM
F15	40 Amp Green	–	CBC Feed #3 (Power Locks)
F16	–	20 Amp Yellow	ECM
F17	30 Amp Pink	–	Starter
F18	40 Amp Green	–	CBC Feed #4 (Exterior Lighting #1)
F19	25 Amp Clear	–	2nd Row Folding Seats Solenoid LT
F20	–	10 Amp Red	A/C Compressor Clutch
F21	25 Amp Clear	–	2nd Row Folding Seat Solenoid RT
F22	–	–	Not Used
F23	–	–	Not used
F24	–	20 Amp Yellow	RR Wiper

Cavity	Cartridge Fuse	Blade Fuse	Description
F25A	–	10 Amp Red	Handsfree LT & RT RR Door Release Mod
F25B	–	10 Amp Red	Active Grill Shutter/ PWR Mirror
F26	40 Amp Green	–	Front HVAC Blower Motor
F27	25 Amp Clear	–	RR Slide Door Module-RT
F28A	–	10 Amp Red	Diagnostic Report
F28B	–	10 Amp Red	USB + AUX Port / Video USB Port
F29	–	–	Not Used
F30A	–	15 Amp Blue	Media HUB 1&2
F30B	–	15 Amp Blue	PWR Lumbar SW
F31	–	–	Not Used
F32	20 Amp Blue	–	ECM
F33	30 Amp Pink	–	Power Liftgate Module
F34	25 Amp Clear	–	RR Door Module-LT
F35	25 Amp Clear	–	Sunroof Control Module
F36	–	–	Not Used
F37	40 Amp Green	–	CBC Feed #4 (Exterior Lighting #2)

Cavity	Cartridge Fuse	Blade Fuse	Description
F38	60 Amp Yellow	–	Vacuum Cleaner
F39	25 Amp Clear	–	Rear HVAC Blower Motor
F40	–	–	Not Used
F41	–	–	Not Used
F42	40 Amp Green	–	Folding Seat Module
F43	–	20 Amp Yellow	Fuel Pump Motor
F44	30 Amp Pink	–	CBC Feed #1 (Interior Lights)
F45	30 Amp Pink	–	Power Inverter
F46	30 Amp Pink	–	Driver Door Module
F47	30 Amp Pink	–	Passenger Door Module
F48	–	–	Not Used
F49	25 Amp Clear	–	RR Sliding Door Module-LT
F50	25 Amp Clear	–	RR Door Module-RT
F51	30 Amp Pink	–	Front Wiper
F52	30 Amp Pink	–	Brake Vacuum Pump
F53	–	–	Not Used
F54	40 Amp Green	–	ESP-ECU And Valves

Cavity	Cartridge Fuse	Blade Fuse	Description
F55A	–	15 Amp Blue	Radio Frequency HUB/ Keyless Ignition System (KIN) / (Electronic Steering Lock-BUX ONLY)
F55B	–	15 Amp Blue	DVD / Video Routing Module (VRM
F56A	–	10 Amp Red	Front and Rear HVAC Control Module / Occupant Classification Module (OCM)/Electronic Steering Lock (ESL)
F56B	–	10 Amp Red	ESP/ESC
F57	–	–	Not Used
F58	–	–	Not Used
F59	30 Amp Pink	–	Trailer Tow Receptacle — If Equipped
F60	–	20 Amp Yellow	Rear Cargo APO
F61	–	20 Amp Yellow	Trailer Tow Right Stop/ Turn — If Equipped
F62	–	–	Not Used

Cavity	Cartridge Fuse	Blade Fuse	Description
F63	–	20 Amp Yellow	Trailer Tow Left Stop/Turn — If Equipped
F64	–	15 Amp Blue	RT HID Headlamp
F65	–	–	Not Used
F66	–	15 Amp Blue	Instrument Panel Cluster (IPC)
F67	–	10 Amp Red	Haptic Lane Feedback Module (HALF) / Park-tronics System (PTS)/ Drivers Assist System Module (DASM)
F68	–	–	Not Used
F69	–	–	Not Used
F70	–	–	Not Used
F71	–	20 Amp Yellow	Horn
F72	–	10 Amp Red	Heated Mirrors – If Equipped
F73	30 Amp Pink	–	Rear Defroster (EBL)
F74	20 Amp Blue	–	Trailer Tow Backup
F75	–	5 Amp Tan	Overhead Console / RR ISC

Cavity	Cartridge Fuse	Blade Fuse	Description
F76	–	20 Amp Yellow	Uconnect/DCSD/ Telematics
F77A	–	10 Amp Red	RR Entertainment Screen 1 & 2/Media HUB 1 & 2/3rd Row USB Charge Only/ 2nd Row USB Charge Only/Vaccum Cleaner SW/ 3rd Row Recline ST SW/LT & RT Stow N Go SW/LT & RT Sliding Door SW Back-light
F77B	–	10 Amp Red	Rain Sensor/Sunroof /CRVMM
F78A	–	15 Amp Blue	Transmission Control Mod-ule (TCM)/ E-Shifter
F78B	–	15 Amp Blue	Instrument Cluster
F79	–	10 Amp Red	ICS/Front And Rear HVAC/ SCCM/ EPB
F80	–	–	Not Used
F81	–	–	Not Used
F82	–	–	Not Used

Cavity	Cartridge Fuse	Blade Fuse	Description
F83	20 Amp Blue	–	TT Park Lights — If Equipped
	30 Amp Pink	–	Headlamp Washer Pump — If Equipped
F84	–	–	Not Used
F85	–	20 Amp Yellow	Cigar Lighter
F86	–	–	Not Used
F87	–	–	Not Used
F88	–	20 Amp Yellow	Front Heated Seats
F89	–	20 Amp Yellow	Rear Heated Seats
F90	–	–	Not Used
F91	–	15 Amp Blue	Front Ventilated Seats/ Heated Steering Wheel
F92	–	5 Amp Tan	Security Gateway
F93	–	–	Not Used
F94	40 Amp Green	–	ESC Motor Pump
F95A	–	10 Amp Red	USB Charge Port — ACC RUN
F95B	–	10 Amp Red	Selectable Fuse Location

Cavity	Cartridge Fuse	Blade Fuse	Description
F96	–	10 Amp Red	Occupant Restraint Controller (ORC) (Airbag)
F97	–	10 Amp Red	Occupant Restraint Controller (ORC) (Airbag)
F98	–	15 Amp Blue	Left HID Headlamp
F99	30 Amp Pink	–	Trailer Tow Module - If Equipped
F100A	–	10 Amp Red	AHLM
F100B	–	10 Amp Red	Rear Camera/LBSS/RBSS/CVPM/Humidity Sensor/In Vehicle Temperature Sensor
Circuit Breakers			
CB1	25 Amp		Power Seats (Driver)
CB2	25 Amp *		Power Seats (Pass)
CB3	25 Amp		FRT PWR Window W/O Door Nodes + RR PWR Window Lockout

* 30A mini fuse is substituted for 25A Circuit Breaker.

JACKING AND TIRE CHANGING — IF EQUIPPED

WARNING!

- **Do not attempt to change a tire on the side of the vehicle close to moving traffic. Pull far enough off the road to avoid the danger of being hit when operating the jack or changing the wheel.**
- **Being under a jacked-up vehicle is dangerous. The vehicle could slip off the jack and fall on you. You could be crushed. Never put any part of your body under a vehicle that is on a jack. If you need to get under a raised vehicle, take it to a service center where it can be raised on a lift.**
- **The jack is designed to be used as a tool for changing tires only. The jack should not be used to lift the vehicle for service purposes. The vehicle should be jacked on a firm level surface only. Avoid ice or slippery areas.**

Jack And Spare Tire Location

The jacking tools, spare tire and portable air compressor (if equipped) or tire service kit (if equipped) are stowed behind an access panel on the left hand side of the vehicle.

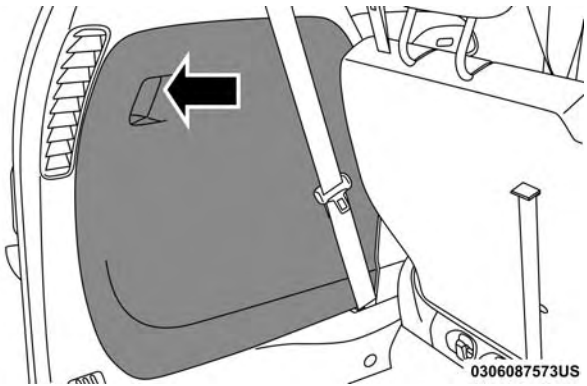

Jacking Equipment Location

Equipment Removal

1. Remove the access panel to the jacking equipment.
2. Unlatch the Portable Air Compressor or Tire Service Kit if equipped. Unscrew the wing nut that is holding the Inflatable Spare Tire and gently remove it from the storage area. Remove wrench from foam tray.

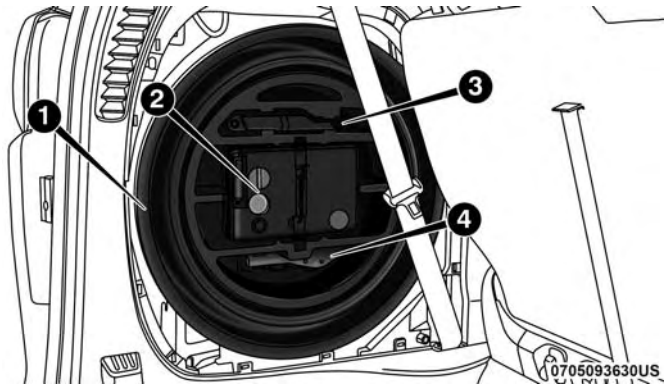

Jacking Equipment

1 — Inflatable Spare Tire
2 — Tire Service Kit
3 — Wrench
4 — Fuel Filler Funnel

3. Remove Jack by turning the jack screw counterclockwise to collapse from storage area that is located behind the tire.

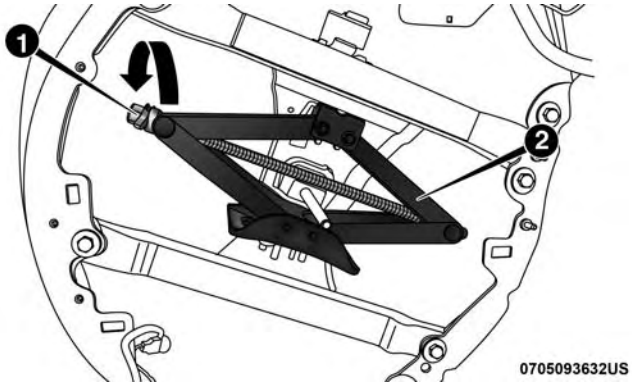

Jack Location

1 — Jack Screw
2 — Jack

Preparations For Jacking

1. Park the vehicle on a firm, level surface. Avoid ice or slippery areas.

WARNING!

Do not attempt to change a tire on the side of the vehicle close to moving traffic. Pull far enough off the road to avoid being hit when operating the jack or changing the wheel.

2. Turn on the Hazard Warning flasher.
3. Apply the parking brake.
4. Place the gear selector into PARK.
5. Place the ignition in OFF mode.
6. Block both the front and rear of the wheel diagonally opposite the jacking position. For example, if the right front wheel is being changed, block the left rear wheel.

NOTE: Passengers should not remain in the vehicle when the vehicle is being jacked.

Jacking Instructions

WARNING!

Carefully follow these tire changing warnings to help prevent personal injury or damage to your vehicle:

- **Always park on a firm, level surface as far from the edge of the roadway as possible before raising the vehicle.**
- **Turn on the Hazard Warning flasher.**
- **Block the wheel diagonally opposite the wheel to be raised.**
- **Apply the parking brake firmly and set the transmission in PARK.**
- **Do not let any passenger sit in the vehicle when it is on a jack.**
- **Do not get under the vehicle when it is on a jack. If you need to get under a raised vehicle, take it to a service center where it can be raised on a lift.**
- **Only use the jack in the positions indicated and for lifting this vehicle during a tire change.**
- **If working on or near a roadway, be extremely careful of motor traffic.**

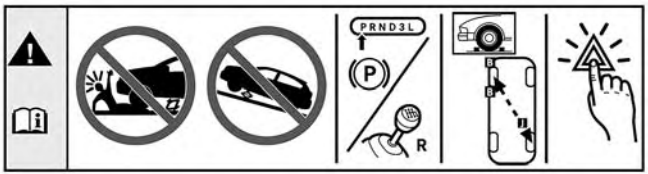

060600714

Jack Warning Label

CAUTION!

Do not attempt to raise the vehicle by jacking on locations other than those indicated in the Jacking Instructions for this vehicle.

NOTE: Refer to "Tires" in "Servicing And Maintenance" for information about the inflatable spare tire, its use, and operation.

0705093629US

Extending The Wrench

1. Loosen (but do not remove) the wheel lug nuts by turning them to the left one turn while the wheel is still on the ground.

2. There are two jack engagement locations on each side of the vehicle body. These locations are on the sill flange of the vehicle body.

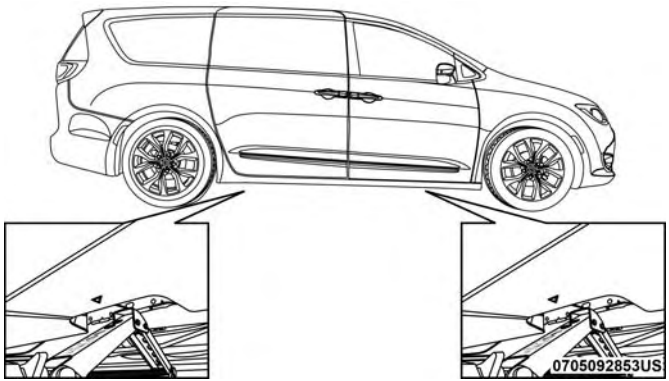

Jack Locations

WARNING!

Being under a jacked-up vehicle is dangerous. The vehicle could slip off the jack and fall on you. You could be crushed. Never get any part of your body under a vehicle that is on a jack. If you need to get under a raised vehicle, take it to a service center where it can be raised on a lift.

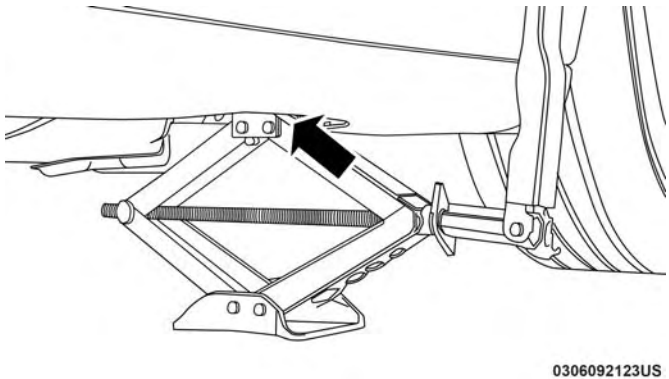

Front Jack Location

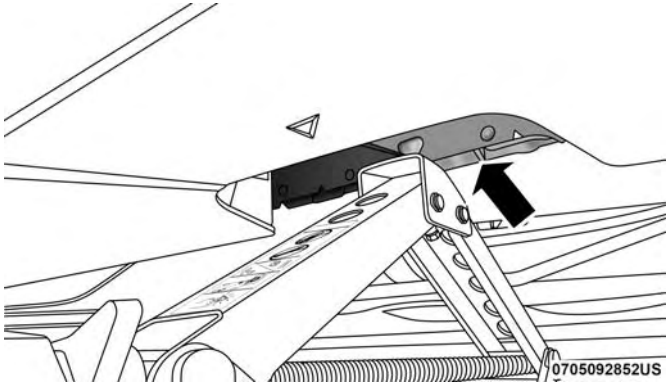

Front Jack Engaged

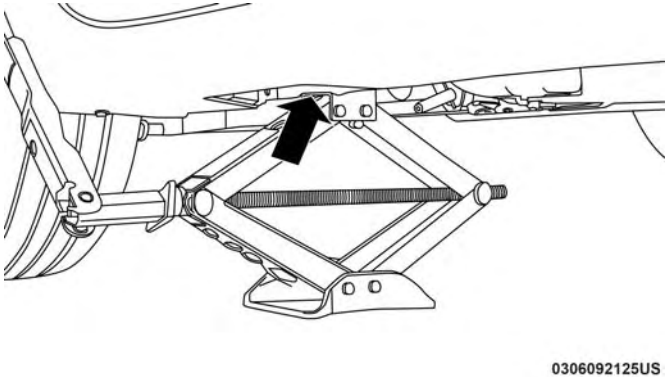

Rear Jacking Location

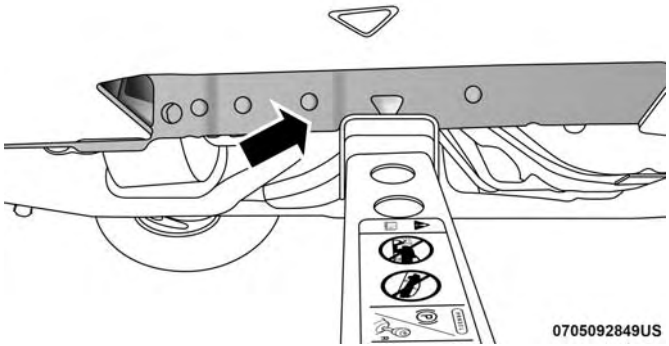

Rear Jack Engaged

CAUTION!

Do not attempt to raise the vehicle by jacking on locations other than those indicated.

3. Place the wrench on the jack screw and turn to the right until the jack head is properly engaged in the described location. **Do not raise the vehicle until you are sure the jack is securely engaged.**
4. Raise the vehicle by turning the jack screw to the right, using the swivel wrench. Raise the vehicle only until the tire just clears the surface and enough clearance is obtained to install the compact spare tire. Minimum tire lift provides maximum stability.

WARNING!

Raising the vehicle higher than necessary can make the vehicle less stable. It could slip off the jack and hurt someone near it. Raise the vehicle only enough to remove the tire.

5. Remove the wheel lug nuts, for vehicles with wheel covers, remove the cover from the wheel by hand. Do not pry the wheel cover off. Then pull the wheel off the hub.
6. Install the inflatable spare on the vehicle, located in the rear cargo area of the vehicle.

WARNING!

To avoid the risk of forcing the vehicle off the jack, do not tighten the wheel nuts fully until the vehicle has been lowered. Failure to follow this warning may result in serious injury.

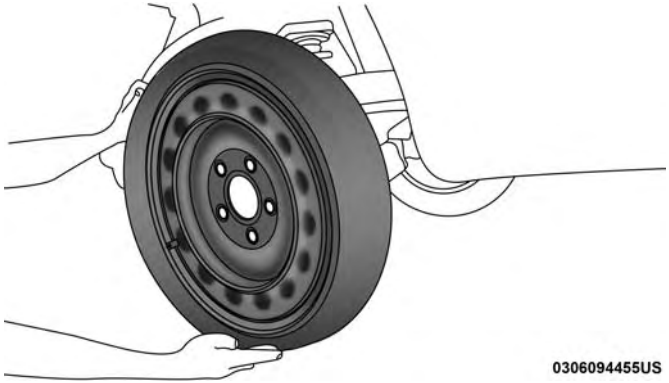

Mounting Inflatable Spare Tire

CAUTION!

Be sure to mount the inflatable spare tire with the valve stem facing outward. The vehicle could be damaged if the inflatable spare tire is mounted incorrectly.

NOTE: Do not install the wheel cover on the inflatable spare tire.

7. Leave the vehicle on the jack and start inflating the inflatable spare after the tire has been mounted to the vehicle. Secure the wheel to the hub by tightening the nuts with wrench. After inflation, once the vehicle is lowered you will have a second opportunity to "torque" the lug nuts.
8. Inflate the tire to the prescribed pressure 60 psi (4.2 Bar) using the Portable Air Compressor or Tire Service Kit if equipped. Refer to "Portable Air Compressor" in this section for usage procedure if equipped. Refer to "Tire Service Kit For Inflating Tire" in this section for usage procedure if equipped.
9. Lower the vehicle once the inflatable Spare has reached its pressure and the compressor-hose has been removed from the tire valve.
10. Finish tightening the lug nuts. Push down on the wrench while at the end of the handle for increased leverage. Tighten the lug nuts in a star pattern until each nut has been tightened twice. Refer to "Torque Specifications" in "Technical Specifications" for proper wheel lug nut torque. If in doubt about the correct tightness, have them checked with a torque wrench by your authorized dealer or at a service station.

11. Lower the jack to its fully-closed position.

WARNING!

A loose tire or jack thrown forward in a collision or hard stop could endanger the occupants of the vehicle. Always stow the jack parts and the spare tire in the places provided. Have the deflated (flat) tire repaired or replaced immediately.

12. Place the deflated (flat) tire and foam tray cover assembly in the rear cargo area. **Do not stow the deflated tire in the inflatable spare tire location.** Have the full-sized tire repaired or replaced, as soon as possible.
13. Stow the jack back in the stowage compartment and place the access panel back. The stud of the storage area must be threaded through the lower part of the jack. Then turn the Jack Screw clockwise to secure it in place.

NOTE: Stow the foam tray and components in the cargo area.

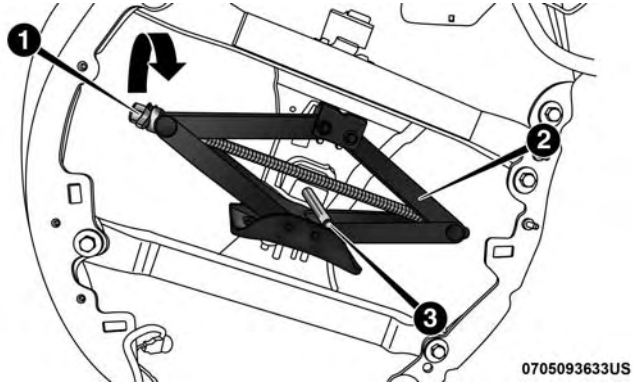

Storing The Jack

1 — Jack Screw
2 — Jack
3 — Stud

Road Tire Installation

Vehicles Equipped With Wheel Covers

1. Mount the road tire on the axle.
2. To ease the installation process for steel wheels with wheel covers, install two lug nuts on the mounting studs which are on each side of the valve stem. Install

the lug nuts with the cone shaped end of the nut toward the wheel. Lightly tighten the lug nuts.

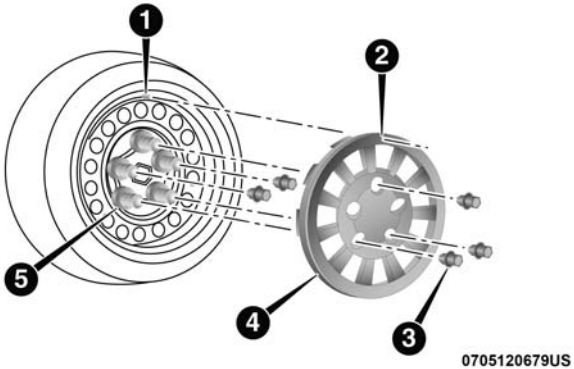

Tire And Wheel Cover Or Center Cap

1 — Valve Stem
2 — Valve Notch
3 — Wheel Lug Nut
4 — Wheel Cover
5 — Mounting Stud

3. Align the valve notch in the wheel cover with the valve stem on the wheel. Install the cover by hand, snapping the cover over the two lug nuts. Do not use a hammer or excessive force to install the cover.

4. Install the remaining lug nuts with the cone shaped end of the nut toward the wheel. Lightly tighten all the lug nuts until the wheel sits flush onto the hub and there is no play. The nuts will have to be fully tightened once the vehicle is lowered. Tightening an improperly seated wheel under vehicle load can damage the threads, cause vibration, and undermine safety.

WARNING!

To avoid the risk of forcing the vehicle off the jack, do not tighten the wheel nuts fully until the vehicle has been lowered. Failure to follow this warning may result in serious injury.

5. Lower the vehicle to the ground by turning the jack handle counterclockwise.

6. Finish tightening the lug nuts. Push down on the wrench while at the end of the handle for increased leverage. Tighten the lug nuts in a star pattern until each nut has been tightened twice. Refer to “Torque Specifications” in “Technical Specifications” for proper wheel lug nut torque. If in doubt about the correct tightness, have them checked with a torque wrench by an authorized dealer or at a service station.

7. After 25 miles (40 km) check the lug nut torque with a torque wrench to ensure that all lug nuts are properly seated against the wheel.

Vehicles Without Wheel Covers

1. Mount the road tire on the axle.
2. Install the remaining lug nuts with the cone shaped end of the nut toward the wheel. Lightly tighten all the lug nuts until the wheel sits flush onto the hub and there is no play. The nuts will have to be fully tightened once the vehicle is lowered. Tightening an improperly seated wheel under vehicle load can damage the threads, cause vibration, and undermine safety.

WARNING!

To avoid the risk of forcing the vehicle off the jack, do not tighten the wheel nuts fully until the vehicle has been lowered. Failure to follow this warning may result in serious injury.

3. Lower the vehicle to the ground by turning the jack handle counterclockwise.
4. Finish tightening the lug nuts. Push down on the wrench while at the end of the handle for increased leverage. Tighten the lug nuts in a star pattern until each nut has been tightened twice. Refer to "Torque Specifications" in the "Technical Specifications" section for proper wheel lug nut torque. If in doubt about the correct tightness, have them checked with a torque wrench by your authorized dealer or at a service station.
5. After 25 miles (40 km) check the lug nut torque with a torque wrench to ensure that all lug nuts are properly seated against the wheel.

Portable Air Compressor — If Equipped

Your vehicle may be equipped with a Portable Air Compressor. Use the Portable Air Compressor located in the side compartment of the cargo area to inflate the inflatable tire to 60 psi (4.2 Bar).

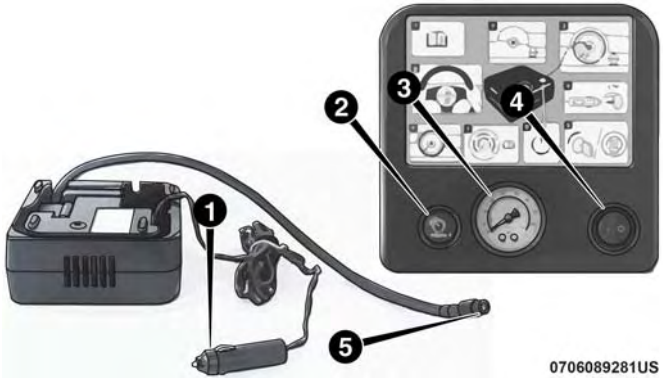

Portable Air Compressor

1 — Power Plug
2 — Deflation Button
3 — Pressure Gauge
4 — Power Button
5 — Air Hose

Portable Air Compressor Usage With Inflatable Spare Tire

1. Remove the Portable Air Compressor from the storage location.
2. Raise the vehicle as described in the Jacking Instructions within this section.

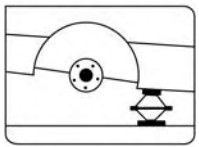

3. Install the Inflatable Spare tire as described in the Jack Instructions section in this manual. Make sure that the valve stem is located near the ground, and then screw the air hose of the Portable Air Compressor to the valve stem.

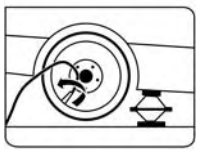

4. Uncoil the power plug and connect it the vehicles 12 Volt power Outlet.

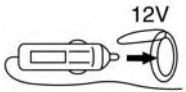

5. Always start the engine before turning ON the Portable Air Compressor.

6. Switch the power button ON.

7. Inflate the tire to 60 psi (4.2 Bar) recommended as per the label on the wheel or if the vehicle equipped with the inflatable spare tire pressure indicated on the Tire and Loading information label located on the driver-side door opening.

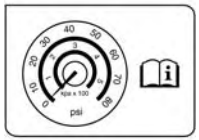

NOTE: If the tire is over inflated, use the deflation button to reduce the tire air pressure.

8. After the tire reaches the recommended pressure, lower the vehicle with the jack as described in the Jack Instructions section in this manual.

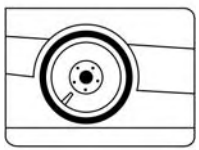

9. Remove the speed limit label sticker from the Portable Air Compressor and place it on the center of the steering wheel.

10. Return the Portable Air Compressor to the foam tray and secure it with the strap. Store the foam tray in the cargo area.

WARNING!

- **Do not lift or carry the Portable Air Compressor by the hose.**
- **Always stow the Portable Air Compressor only in the provided place.**
- **The metal end fitting from Power Plug may get hot after use, so it should be handled carefully.**
- **Keep the Portable Air Compressor away from open flames or heat source.**

Tire Service Kit For Inflating Tire — If Equipped

Your vehicle may be equipped with a Tire Service Kit. Use the Tire Service Kit located in the side compartment of the cargo area to inflate the inflatable tire to 60 psi (4.2 Bar).

Tire Service Kit And Components And Operation

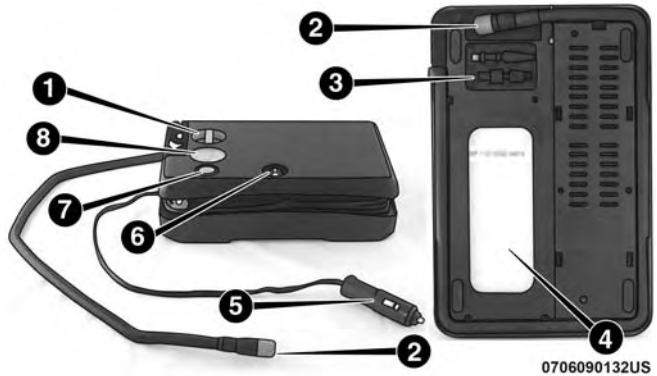

Tire Service Kit Components

1 — Mode Select Knob
2 — Sealant/Air Hose
3 — Hose Accessories
4 — Sealant Bottle
5 — Power Plug
6 — Power Switch
7 — Deflation Button
8 — Pressure Gauge

Using The Mode Select Knob And Hoses

Your Tire Service Kit is equipped with the following symbols to indicate the air or sealant mode.

Selecting Air Mode

Push in the Mode Select Knob and turn to this position for air mode operation only.

Selecting Sealant Mode

Push in the Mode Select Knob and turn to this position to inject the Tire Service Kit Sealant and to inflate the tire.

Using The Power Button

Push and release the Power Button once to turn On the Tire Service Kit. Push and release the Power Button again to turn Off the Tire Service Kit.

Using The Deflation Button

Push the Deflation Button to reduce the air pressure in the tire if it becomes over-inflated.

WARNING!

- **Keep Tire Service Kit away from open flames or heat source.**
- **A loose Tire Service Kit thrown forward in a collision or hard stop could endanger the occupants of the vehicle. Always stow the Tire Service Kit in the place**

(Continued)

WARNING! *(Continued)*

provided. Failure to follow these warnings can result in injuries that are serious or fatal to you, your passengers, and others around you.

- **Take care not to allow the contents of Tire Service Kit to come in contact with hair, eyes, or clothing. Tire Service Kit sealant is harmful if inhaled, swallowed, or absorbed through the skin. It causes skin, eye, and respiratory irritation. Flush immediately with plenty of water if there is any contact with eyes or skin. Change clothing as soon as possible, if there is any contact with clothing.**
- **Tire Service Kit Sealant solution contains latex. In case of an allergic reaction or rash, consult a physician immediately. Keep Tire Service Kit out of reach of children. If swallowed, rinse mouth immediately with plenty of water and drink plenty of water. Do not induce vomiting! Consult a physician immediately.**

Whenever You Stop To Use Tire Service Kit:

1. Pull over to a safe location and turn on the vehicle's Hazard Warning flashers.
2. Verify that the valve stem (on the wheel with the deflated tire) is in a position that is near to the ground. This will allow the Tire Service Kit Hose to reach the valve stem and keep the Tire Service Kit flat on the ground. This will provide the best positioning of the kit when running the air pump. Move the vehicle as necessary to place the valve stem in this position before proceeding.
3. Place the transmission in PARK and cycle the ignition in the OFF position.
4. Ensure the park brake is engaged.

Setting Up To Use Tire Service Kit:

1. Remove the Tire Service Kit from the storage location.
2. Uncoil the Sealant/Air Hose. Remove the cap from the valve stem and then screw the fitting in at the end of the Sealant/Air Hose clockwise onto the valve stem.

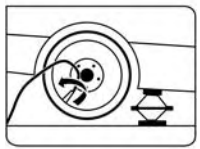

3. Uncoil the Power Plug and insert the plug into the vehicle's 12 Volt power outlet.

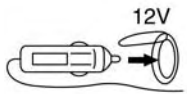

4. Place the Tire Service Kit on the ground next to the deflated tire.

5. Engage parking brake before turning the engine ON.

6. Always start the engine before turning ON the Tire Service Kit.

7. Turn the Mode Select Knob to Air Mode position.

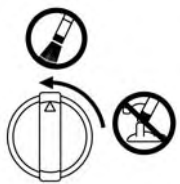

NOTE: Do not fill inflatable spare tire with sealant. Refer to "Tire Service Kit" in this chapter for repairing tires.

8. Switch the power button ON.

9. Inflate the tire to 60 psi (4.2 Bar) recommended as per the label on the wheel or if the vehicle equipped with the inflatable spare tire pressure indicated on the Tire and Loading information label located on the driver-side door opening.

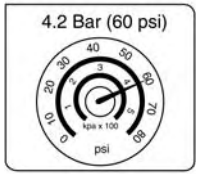

NOTE: If the tire is over inflated, use the deflation button to reduce the tire air pressure.

10. After the tire reaches the recommended pressure, lower the vehicle with the jack as described in the Jack Instructions section in this manual.

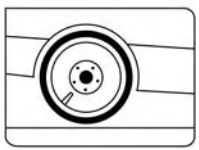

11. Remove the speed limit label sticker from the Tire Service Kit and place it on the center of the steering wheel.

12. Return the Tire Service Kit to the foam tray and secure it with the strap. Store the foam tray in the cargo area.

Return Inflatable Spare Tire

To return Inflatable Spare Tire to its storage location.

1. Return the Jack.
2. Deflate the spare tire. Use the Tire Service Kit or Portable Air Compressor and push the deflation button to do this step. Refer to "Tire Service Kit" or "Portable Air Compressor" if equipped in this section for additional information. The inflatable spare tire will return to its original shape.
3. Install the inflatable spare tire back into its original stowage location and position facing outward.
4. Install the foam tray with wrench and funnel installed.
5. Install and tighten the wing nut by hand.
6. Install the Tire Service Kit or Portable Air Compressor if equipped and tighten the strap.
7. Install access panel door.

TIRE SERVICE KIT — IF EQUIPPED

Your vehicle may be equipped with a Tire Service Kit. Small punctures up to 1/4 inch (6 mm) in the tire tread can be sealed with Tire Service Kit. Foreign objects (e.g., screws or nails) should not be removed from the tire. Tire Service Kit can be used in outside temperatures down to approximately -4°F (-20°C). This kit will provide a temporary tire seal, allowing you to drive your vehicle up to 100 miles (160 km) with a maximum speed of 50 mph (80 km/h).

Tire Service Kit Storage

The Tire Service Kit is secured with a strap and is stored in the storage bin located behind the rear cargo trim panel.

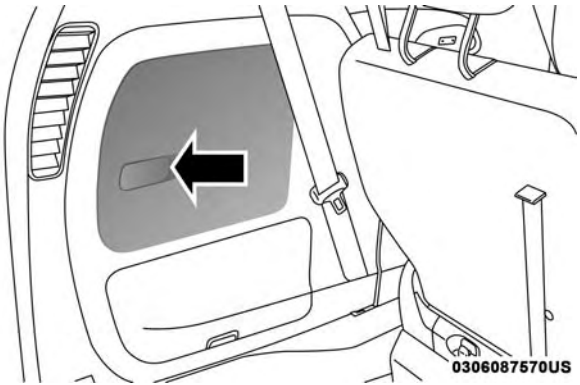

Tire Service Kit Location

Tire Service Kit And Components And Operation

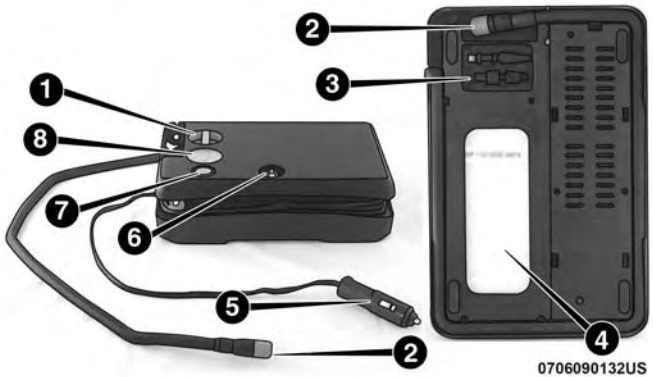

Tire Service Kit Components

1 — Mode Select Knob
2 — Sealant/Air Hose
3 — Hose Accessories
4 — Sealant Bottle
5 — Power Plug
6 — Power Switch
7 — Deflation Button
8 — Pressure Gauge

Using The Mode Select Knob And Hoses

Your Tire Service Kit is equipped with the following symbols to indicate the air or sealant mode.

Selecting Air Mode

Push in the Mode Select Knob and turn to this position for air pump operation only.

Selecting Sealant Mode

Push in the Mode Select Knob and turn to this position to inject the Tire Service Kit Sealant and to inflate the tire.

Using The Power Button

Push and release the Power Button once to turn On the Tire Service Kit. Push and release the Power Button again to turn Off the Tire Service Kit.

Using The Deflation Button

Push the Deflation Button to reduce the air pressure in the tire if it becomes over-inflated.

Tire Service Kit Usage Precautions

- Replace the Tire Service Kit Sealant Bottle prior to the expiration date (printed at the lower right hand corner on the bottle label) to assure optimum operation of the system. Refer to “Sealant Bottle Replacement” in this section.

- The Sealant Bottle is a one tire application use and needs to be replaced after each use. Always replace these components immediately at your original equipment vehicle dealer.
- When the Tire Service Kit sealant is in a liquid form, clean water, and a damp cloth will remove the material from the vehicle or tire and wheel components. Once the sealant dries, it can easily be peeled off and properly discarded.
- For optimum performance, make sure the valve stem on the wheel is free of debris before connecting the Tire Service Kit.
- The Tire Service Kit Sealant is only intended to seal punctures less than 1/4 inch (6 mm) diameter in the tread/contact surface of your vehicle's tires.
- The Tire Service Kit Sealant is not intended to seal punctures on the tires' side walls.
- You can use the Tire Service Kit air pump to inflate bicycle tires. The kit also comes with two needles, located in the Accessory Storage Compartment (on the bottom of the air pump) for inflating sport balls, rafts, or similar inflatable items. However, use only the Air Pump and make sure the Mode Select Knob is in the Air Mode when inflating such items to avoid injecting sealant into them.
- Do not lift or carry the Tire Service Kit by the hoses.

WARNING!

- **Do not attempt to seal a tire on the side of the vehicle closest to traffic. Pull far enough off the road to avoid the danger of being hit when using the Tire Service Kit.**
- **Do not use Tire Service Kit or drive the vehicle under the following circumstances:**
  - **If the puncture in the tire tread is approximately 1/4 inch (6 mm) or larger.**
  - **If the tire has any sidewall damage.**
  - **If the tire has any damage from driving with extremely low tire pressure.**
  - **If the tire has any damage from driving on a flat tire.**
  - **If the wheel has any damage.**
  - **If you are unsure of the condition of the tire or the wheel.**

(Continued)

WARNING! ***(Continued)***

- **Keep Tire Service Kit away from open flames or heat source.**
- **A loose Tire Service Kit thrown forward in a collision or hard stop could endanger the occupants of the vehicle. Always stow the Tire Service Kit in the place provided. Failure to follow these warnings can result in injuries that are serious or fatal to you, your passengers, and others around you.**
- **Take care not to allow the contents of Tire Service Kit to come in contact with hair, eyes, or clothing. Tire Service Kit sealant is harmful if inhaled, swallowed, or absorbed through the skin. It causes skin, eye, and respiratory irritation. Flush immediately with plenty of water if there is any contact with eyes or skin. Change clothing as soon as possible, if there is any contact with clothing.**
- **Tire Service Kit Sealant solution contains latex. In case of an allergic reaction or rash, consult a physician immediately. Keep Tire Service Kit out of reach of children. If swallowed, rinse mouth immediately with plenty of water and drink plenty of water. Do not induce vomiting! Consult a physician immediately.**

Sealing A Tire With Tire Service Kit

Whenever You Stop To Use Tire Service Kit:

1. Pull over to a safe location and turn on the vehicle's Hazard Warning flashers.
2. Verify that the valve stem (on the wheel with the deflated tire) is in a position that is near to the ground. This will allow the Tire Service Kit Hose to reach the valve stem and keep the Tire Service Kit flat on the ground. This will provide the best positioning of the kit when injecting the sealant into the deflated tire and running the air pump. Move the vehicle as necessary to place the valve stem in this position before proceeding.
3. Place the transmission in PARK and cycle the ignition in the OFF position.
4. Apply the parking brake.

Setting Up To Use Tire Service Kit:

1. Uncoil the Sealant Hose and then remove the cap from the fitting at the end of the hose.
2. Place the Tire Service Kit flat on the ground next to the deflated tire.

3. Remove the cap from the valve stem and then screw the fitting at the end of the Sealant Hose onto the valve stem.

4. Uncoil the Power Plug and insert the plug into the vehicle's 12 Volt power outlet.

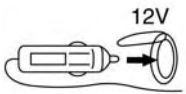

NOTE: Do not remove foreign objects (e.g., screws or nails) from the tire.

Injecting Tire Service Kit Sealant Into The Deflated Tire:

1. Always start the vehicle before turning the Tire Service Kit on.

2. Ensure the Mode Select Knob is to the Sealant Mode position.

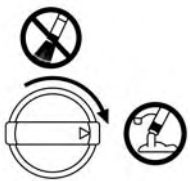

3. After pushing the Power Button, the sealant (white fluid) will flow from the Sealant Bottle through the Sealant Hose and into the tire.

NOTE: Sealant may leak out through the puncture in the tire.

If the sealant (white fluid) does not flow within 0 – 10 seconds through the Sealant Hose:

1. Push the Power Button to turn the Tire Service Kit off. Disconnect the Sealant Hose from the valve stem. Make sure the valve stem is free of debris. Reconnect the Sealant Hose to the valve stem. Check that the Mode Select Knob is in the Sealant Mode position and not Air Mode. Push the Power Button to turn the Tire Service Kit on.
2. Connect the Power Plug to a different 12 Volt power outlet in your vehicle or another vehicle, if available. Make sure the vehicle is running before turning the Tire Service Kit on.
3. The Sealant Bottle may be empty due to previous use. Call for assistance.

If the sealant (white fluid) does flow through the Sealant Hose:

1. Continue to operate the pump until sealant is no longer flowing through hose (typically takes 30 - 70 seconds). As the sealant flows through the Sealant Hose, the Pressure Gauge can read as high as 70 psi (4.8 Bar). The Pressure Gauge will decrease quickly from approximately 70 psi (4.8 Bar) to the actual tire pressure when the Sealant Bottle is empty.

2. The pump will start to inject air into the tire immediately after the Sealant Bottle is empty. Continue to operate the pump and inflate the tire to the cold tire inflation pressure found on the tire and loading information label located in the driver-side door opening. Check the tire pressure by looking at the Pressure Gauge.

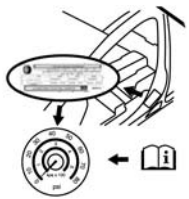

If the tire does not inflate to at least 26 psi (1.8 Bar) pressure within 15 minutes:

- The tire is too badly damaged. Do not attempt to drive the vehicle further. Call for assistance.

If the tire inflates to the recommended pressure or is at least 26 psi (1.8 Bar) pressure within 15 minutes:

NOTE: If the tire becomes over-inflated, push the Deflation Button to reduce the tire pressure to the recommended inflation pressure before continuing.

1. Push the Power Button to turn the Tire Service Kit off.

2. Remove the speed limit label from the Tire Service Kit and place sticker on the steering wheel.

3. Immediately disconnect the Sealant Hose from the valve stem, reinstall the cap on the fitting at the end of the hose, and place the Tire Service Kit in the vehicle storage location. Proceed to "Drive Vehicle."

Drive Vehicle:

Immediately after injecting sealant and inflating the tire, drive the vehicle 5 miles (8 km) or 10 minutes to ensure distribution of the Tire Service Kit Sealant within the tire. Do not exceed 50 mph (80 km/h).

WARNING!

The Tire Service Kit is not a permanent flat tire repair. Have the tire inspected and repaired or replaced after using the Tire Service Kit. Do not exceed 50 mph (80 km/h) until the tire is repaired or replaced. Failure to follow this warning can result in injuries that are serious or fatal to you, your passengers, and others around you. Have the tire checked as soon as possible at your authorized dealer.

After Driving:

Pull over to a safe location. Refer to "Whenever You Stop To Use Tire Service Kit" in this section before continuing.

1. Uncoil the Sealant Hose, and then remove the cap from the fitting at the end of the hose.
2. Place the Tire Service Kit flat on the ground next to the deflated tire.
3. Remove the cap from the valve stem, and then screw the fitting at the end of the Sealant Hose onto the valve stem.

4. Uncoil the Power Plug and insert the plug into the vehicle's 12 Volt power outlet.

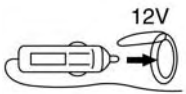

5. Uncoil the Hose and screw the fitting at the end of the hose onto the valve stem.

6. Turn the Mode Select Knob and turn to the Air Mode position.

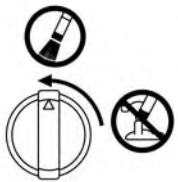

7. Check the pressure in the tire by reading the Pressure Gauge.

If tire pressure is less than 19 psi (1.3 Bar):

The tire is too badly damaged. Do not attempt to drive the vehicle further. Call for assistance.

If the tire pressure is 19 psi (1.3 Bar) or higher:

1. Push the Power Button to turn on Tire Service Kit and inflate the tire to the cold tire inflation pressure found on the tire and loading information label located in the driver-side door opening.

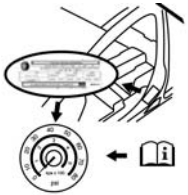

NOTE: If the tire becomes over-inflated, push the Deflation Button to reduce the tire pressure to the recommended inflation pressure before continuing.

2. Disconnect the Tire Service Kit from the valve stem, reinstall the cap on the valve stem and unplug from 12 Volt outlet.
3. Place the Tire Service Kit in its proper storage area in the vehicle.
4. Have the tire inspected and repaired or replaced at the earliest opportunity at an authorized dealer or tire service center.
5. Remove the Speed Limit sticker from the steering wheel after the tire has been repaired.
6. Replace the Sealant Bottle at an authorized dealer as soon as possible. Refer to “Sealant Bottle Replacement”.

NOTE: When having the tire serviced, advise the authorized dealer or service center that the tire has been sealed using the Tire Service Kit.

Sealant Bottle Replacement:

1. Unwrap the power cord.
2. Unwrap the hose.

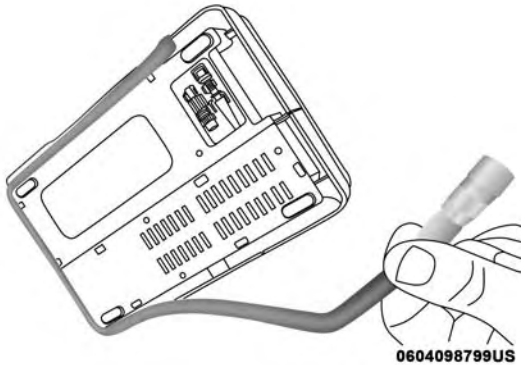

Unwrap The Hose

3. Remove the bottle cover.

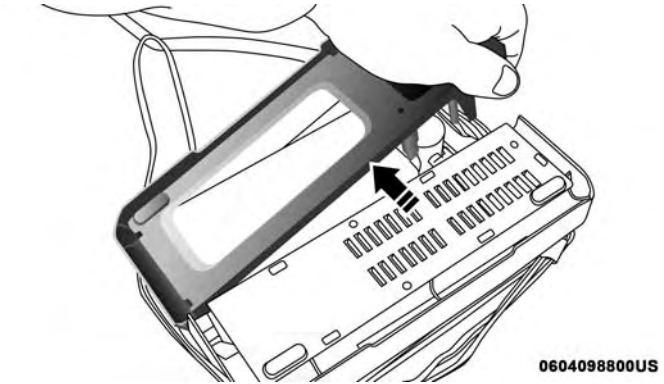

Remove The Bottle Cover

4. Rotate the bottle up beyond vertical to release.

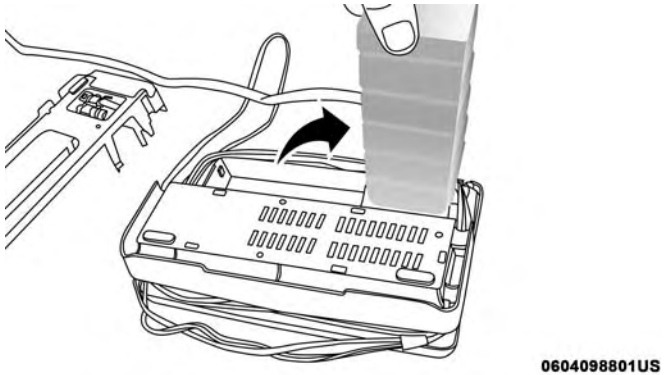

Rotate The Bottle Up

5. Pull the bottle away from the Compressor.

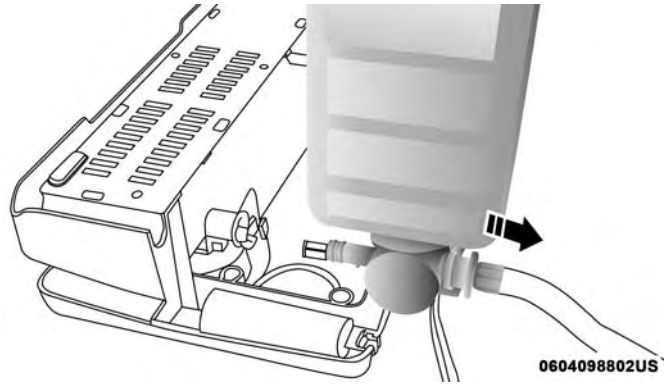

Remove The Bottle

NOTE:

- For sealant bottle installation, follow these steps reverse order.
- Replacement sealant bottles are available at authorized service centers.

JUMP STARTING

If your vehicle has a discharged battery it can be jump started using a set of jumper cables and a battery in another vehicle or by using a portable battery booster pack. Jump starting can be dangerous if done improperly so please follow the procedures in this section carefully.

NOTE: When using a portable battery booster pack follow the manufacturer's operating instructions and precautions.

WARNING!

Do not attempt jump starting if the battery is frozen. It could rupture or explode and cause personal injury.

CAUTION!

Do not use a portable battery booster pack or any other booster source with a system voltage greater than 12 Volts or damage to the battery, starter motor, alternator or electrical system may occur.

Preparations For Jump Start

The battery in your vehicle is located on the left side of the engine compartment.

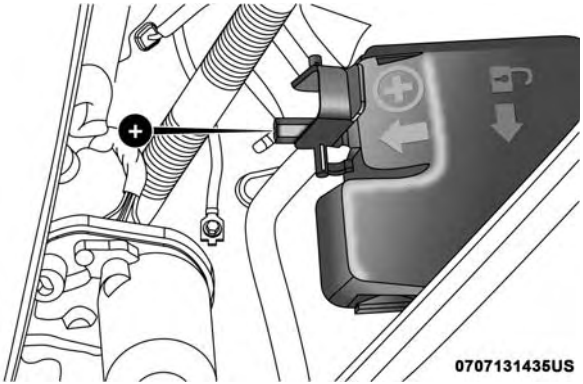

Positive Jump Starting Location

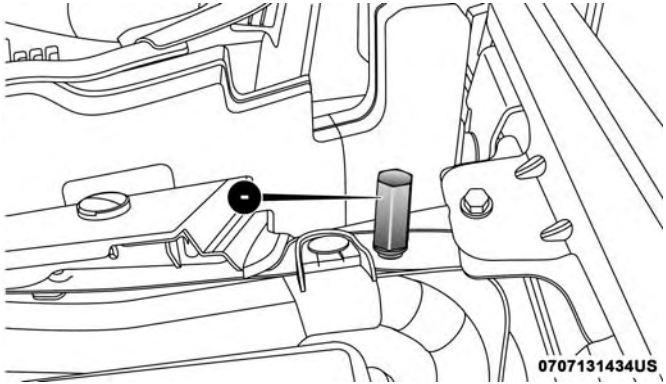

Negative Jump Starting Location

WARNING!

- **Take care to avoid the radiator cooling fan whenever the hood is raised. It can start anytime the ignition switch is ON. You can be injured by moving fan blades.**
- **Remove any metal jewelry such as rings, watch bands and bracelets that could make an inadvertent electrical contact. You could be seriously injured.**

(Continued)

WARNING! *(Continued)*

- **Batteries contain sulfuric acid that can burn your skin or eyes and generate hydrogen gas which is flammable and explosive. Keep open flames or sparks away from the battery.**

1. Apply the parking brake, shift the automatic transmission into PARK and place the ignition to OFF.
2. Turn off the heater, radio, and all unnecessary electrical accessories.
3. If using another vehicle to jump start the battery, park the vehicle within the jumper cables reach, set the parking brake and make sure the ignition is OFF.

WARNING!

Do not allow vehicles to touch each other as this could establish a ground connection and personal injury could result.

Jump Starting Procedure

WARNING!

Failure to follow this jump starting procedure could result in personal injury or property damage due to battery explosion.

CAUTION!

Failure to follow these procedures could result in damage to the charging system of the booster vehicle or the discharged vehicle.

Connecting The Jumper Cables

1. Connect the positive **(+)** end of the jumper cable to the positive **(+)** post of the vehicle with the discharged battery.
2. Connect the opposite end of the positive **(+)** jumper cable to the positive **(+)** post of the booster battery.
3. Connect the negative **(-)** end of the jumper cable to the negative **(-)** post of the booster battery.

4. Connect the opposite end of the negative **(-)** jumper cable to the negative post near the windshield cowl (exposed metal part of the discharged vehicle's engine).

WARNING!

Do not connect the jumper cable to the negative (-) post of the discharged battery. The resulting electrical spark could cause the battery to explode and could result in personal injury. Only use the specific ground point, do not use any other exposed metal parts.

5. Start the engine in the vehicle that has the booster battery, let the engine idle a few minutes, and then start the engine in the vehicle with the discharged battery.
6. Once the engine is started, remove the jumper cables in the reverse sequence:

Disconnecting The Jumper Cables

1. Disconnect the negative **(-)** end of the jumper cable from the engine ground of the vehicle with the discharged battery.
2. Disconnect the opposite end of the negative **(-)** jumper cable from the negative **(-)** post of the booster battery.
3. Disconnect the positive **(+)** end of the jumper cable from the positive **(+)** post of the booster battery.
4. Disconnect the opposite end of the positive **(+)** jumper cable from the positive **(+)** post of the vehicle with the discharged battery.

If frequent jump starting is required to start your vehicle you should have the battery and charging system inspected at an authorized dealer.

CAUTION!

Accessories plugged into the vehicle power outlets draw power from the vehicle's battery, even when not in use (i.e., cellular devices, etc.). Eventually, if plugged in long enough without engine operation, the vehicle's battery will discharge sufficiently to degrade battery life and/or prevent the engine from starting.

REFUELING IN EMERGENCY

The funnel for the Cap-Less Fuel System is located with the spare tire (if equipped) or in the upper storage bin. If your vehicle is out of fuel and an auxiliary fuel can is needed, insert the funnel into the filler neck and proceed to fill the vehicle.

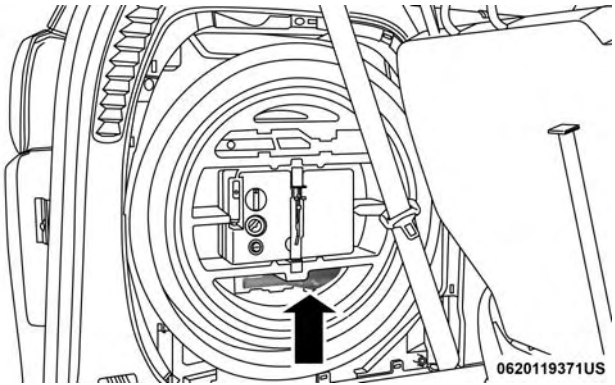

Emergency Fuel Fill Funnel

For more information on the Cap-Less Fuel System refer to "Refueling The Vehicle" in "Starting And Operating" in this manual.

IF YOUR ENGINE OVERHEATS

In any of the following situations, you can reduce the potential for overheating by taking the appropriate action.

- On the highways — slow down.
- In city traffic — while stopped, place the transmission in NEUTRAL, but do not increase engine idle speed.

NOTE: There are steps that you can take to slow down an impending overheat condition:

- If your air conditioner (A/C) is on, turn it off. The A/C system adds heat to the engine cooling system and turning the A/C off can help remove this heat.
- You can also turn the temperature control to maximum heat, the mode control to floor and the blower control to high. This allows the heater core to act as a supplement to the radiator and aids in removing heat from the engine cooling system.

WARNING!

You or others can be badly burned by hot engine coolant (antifreeze) or steam from your radiator. If you see or hear steam coming from under the hood, do not

(Continued)

WARNING! *(Continued)*

open the hood until the radiator has had time to cool. Never try to open a cooling system pressure cap when the radiator or coolant bottle is hot.

CAUTION!

Driving with a hot cooling system could damage your vehicle. If temperature gauge reads "H", pull over and stop the vehicle. Idle the vehicle with the air conditioner turned off until the pointer drops back into the normal range. If the pointer remains on the "H", turn the engine off immediately, and call for service.

MANUAL PARK RELEASE

WARNING!

You should be seated in the driver's seat with your foot firmly placed on the brake pedal to maintain control of the vehicle before activating the Manual Park Release.

(Continued)

WARNING! *(Continued)*

If possible, you should apply the parking brake. Activating the Manual Park Release will allow your vehicle to roll away if it is not secured or properly connected to a tow vehicle. Activating the Manual Park Release on an unsecured vehicle could lead to serious injury or death for those in or around the vehicle.

In order to move the vehicle in cases where the transmission will not shift out of PARK (such as a dead battery), a Manual Park Release is available.

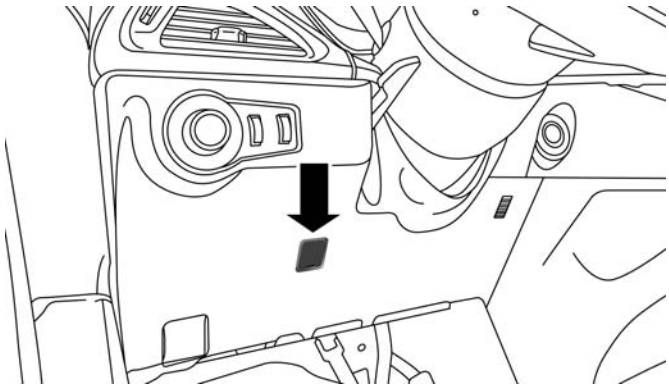

Manual Park Release Access Cover

Follow These Steps To Activate The Manual Park Release:

1. Apply firm pressure to the brake pedal while seated in the driver's seat.
2. Apply the parking brake, if possible.
3. Using a small screwdriver or similar tool, remove the Manual Park Release access cover, which is to the lower left of the steering column.
4. The Manual Park Release access cover is connected to a red tether strap. Pull the tether strap out as far as it will go, then release it. The transmission should now be in NEUTRAL, allowing the vehicle to be moved.

NOTE: When the lever is locked in the released position, the tether will remain outside of the trim panel and the access cover cannot be re-installed.

5. Release the parking brake only when the vehicle is securely connected to a tow vehicle.

To Reset The Manual Park Release:

1. Apply firm pressure to the brake pedal while seated in the driver's seat.
2. Pull the tether strap out again, then release it.
3. Allow the tether to retract with the lever back to its original position.
4. Verify that the transmission is in PARK.
5. Confirm that the tether has retracted fully and re-install the access cover. If the access cover cannot be re-installed, repeat steps 1 through 4.

FREEING A STUCK VEHICLE

If your vehicle becomes stuck in mud, sand or snow, it can often be moved using a rocking motion. Turn the steering wheel right and left to clear the area around the front wheels. Then shift back and forth between DRIVE and REVERSE while gently pressing the accelerator.

NOTE: Shifts between DRIVE and REVERSE can only be achieved at wheel speeds of 5 mph (8 km/h) or less. Whenever the transmission remains in NEUTRAL for more than two seconds, you must press the brake pedal to engage DRIVE or REVERSE.

Use the least amount of accelerator pedal pressure that will maintain the rocking motion without spinning the wheels or racing the engine.

NOTE: Push the "ESC Off" switch to place the Electronic Stability Control (ESC) system in "Partial Off" mode, before rocking the vehicle. Refer to "Electronic Brake Control" in "Safety" for further information. Once the vehicle has been freed, push the "ESC Off" switch again to restore "ESC On" mode.

WARNING!

Fast spinning tires can be dangerous. Forces generated by excessive wheel speeds may cause damage, or even failure, of the axle and tires. A tire could explode and injure someone. Do not spin your vehicle's wheels faster than 30 mph (48 km/h) or for longer than 30 seconds continuously without stopping when you are stuck and do not let anyone near a spinning wheel, no matter what the speed.

CAUTION!

- **Racing the engine or spinning the wheels may lead to transmission overheating and failure. Allow the engine to idle with the transmission in NEUTRAL for at least one minute after every five rocking-motion cycles. This will minimize overheating and reduce the risk of transmission failure during prolonged efforts to free a stuck vehicle.**
- **When "rocking" a stuck vehicle by shifting between DRIVE and REVERSE, do not spin the wheels faster than 15 mph (24 km/h), or drivetrain damage may result.**
- **Revving the engine or spinning the wheels too fast may lead to transmission overheating and failure. It can also damage the tires. Do not spin the wheels above 30 mph (48 km/h) while in gear (no transmission shifting occurring).**

TOWING A DISABLED VEHICLE

This section describes procedures for towing a disabled vehicle using a commercial towing service.

Towing Condition	Wheel OFF The Ground	ALL MODELS
Flat Tow	NONE	**NOT ALLOWED**
Wheel Lift Or Dolly Tow	Front	OK
	Rear	**NOT ALLOWED**
Flatbed	**ALL**	**BEST METHOD**

Proper towing or lifting equipment is required to prevent damage to your vehicle. Use only tow bars and other equipment designed for this purpose, following equipment manufacturer's instructions. Use of safety chains is mandatory. Attach a tow bar or other towing device to main structural members of the vehicle, not to bumpers or associated brackets. State and local laws regarding vehicles under tow must be observed.

NOTE:

- You must ensure that the Auto Park Brake feature is disabled before towing this vehicle (if rear wheels are on the ground), to avoid inadvertent Electric Park Brake engagement. The Auto Park Brake feature is enabled or disabled via the customer programmable features in the Uconnect Settings.
- Vehicles with a discharged battery or total electrical failure when the Electric Parking Brake (EPB) is engaged, will need a wheel dolly or jack to raise the rear wheels off the ground when moving the vehicle onto a flatbed.

The manufacturer recommends towing your vehicle with all four wheels **OFF** the ground using a flatbed.

If flatbed equipment is not available, this vehicle must be towed with the front wheels OFF the ground (using a towing dolly, or wheel lift equipment with the front wheels raised).

NOTE: Ensure that the Electric Park Brake is released, and remains released, while being towed.

CAUTION!

Towing this vehicle in violation of the above requirements can cause severe transmission damage. Damage from improper towing is not covered under the New Vehicle Limited Warranty.

Vehicle Recovery Tow Points

Your vehicle is equipped with Vehicle Recovery Points that can be used to recover a disabled vehicle, located on the underbody of the vehicle.

NOTE:

- Ensure that the towing service tow hooks are properly seated and secured in the attachment points.
- This recovery tow feature should be used by a trained professional only.
- Use approved receptacle location to free the disabled vehicle from its environment.

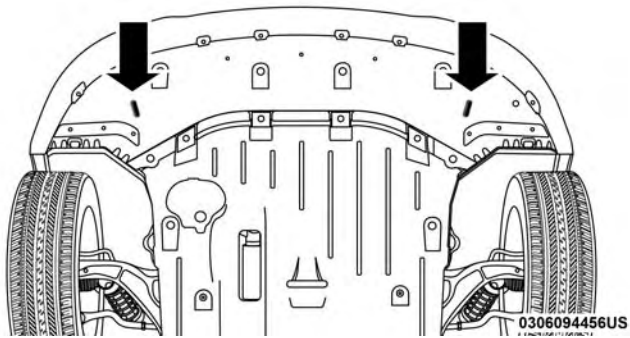

Front Recovery Points

CAUTION!

Recovery feature:
- **Is to be used by a professional ONLY.**
- **Is used only to provide recovery of the vehicle.**
- **Is NOT to be used to recover secondary vehicle.**
- **Is NOT to be used for transporting the vehicle over the road, i.e. "Flat Towing".**

Recovery load should:
- **Be applied at constant speed.**
- **Be applied parallel to the center line of the length of the vehicle.**
- **Not be an abrupt acceleration.**

If you must use the accessories (wipers, defrosters, etc.) while being towed, the ignition must be in the ON/RUN mode, not the ACC mode.

NOTE: The Safehold feature will engage the Electric Park Brake whenever the driver's door is opened (if the ignition is ON, transmission is not in PARK, and brake pedal is released). If you are towing this vehicle with the ignition in the ON/RUN mode, you must manually disable the Electric Park Brake each time the driver's door is opened, by pressing the brake pedal and then releasing the EPB.

If the key fob is unavailable, or the vehicle's battery is discharged, refer to "Manual Park Release" in this section for instructions on shifting the transmission out of PARK in order to move the vehicle.

CAUTION!

- **Do not use sling-type equipment when towing. Vehicle damage may occur.**
- **When securing the vehicle to a flatbed truck, do not attach to front or rear suspension components. Damage to your vehicle may result from improper towing.**
- **Ensure that the Electric Park Brake is released, and remains released, while being towed.**

ENHANCED ACCIDENT RESPONSE SYSTEM (EARS)

This vehicle is equipped with an Enhanced Accident Response System.

Please refer to "Occupant Restraint Systems" in "Safety" for further information on the Enhanced Accident Response System (EARS) function.

EVENT DATA RECORDER (EDR)

This vehicle is equipped with an Event Data Recorder (EDR). The main purpose of an EDR is to record data that will assist in understanding how a vehicle's systems performed under certain crash or near crash-like situations, such as an air bag deployment or hitting a road obstacle.

Please refer to "Occupant Restraint Systems" in "Safety" for further information on the Event Data Recorder (EDR).

SERVICING AND MAINTENANCE

CONTENTS

■ SCHEDULED SERVICING 509
- □ Maintenance Plan 510
- □ Heavy Duty Use Of The Vehicle 512

■ ENGINE COMPARTMENT 513
- □ 3.6L Engine 513
- □ Checking Oil Level 514
- □ Adding Washer Fluid 514
- □ Maintenance-Free Battery 515

■ DEALER SERVICE 516
- □ Engine Oil 516
- □ Engine Oil Filter 518
- □ Engine Air Cleaner Filter 518
- □ Accessory Drive Belt Inspection 519
- □ Air Conditioner Maintenance 520
- □ Body Lubrication 523
- □ Windshield Wiper Blades 524
- □ Exhaust System 529
- □ Cooling System 530
- □ Brake System 535
- □ Automatic Transmission 536

■ RAISING THE VEHICLE 538

■ TIRES 538
- □ Tire Safety Information 538
- □ Tires — General Information 548
- □ Tire Types 554
- □ Spare Tires — If Equipped 555
- □ Wheel And Wheel Trim Care 558
- □ Tire Chains (Traction Devices) 559

- Tire Rotation Recommendations 560

■ DEPARTMENT OF TRANSPORTATION UNIFORM TIRE QUALITY GRADES 561

- Treadwear 561
- Traction Grades 561
- Temperature Grades 562

■ STORING THE VEHICLE 562

■ BODYWORK 563

- Protection From Atmospheric Agents 563
- Body And Underbody Maintenance 564
- Preserving The Bodywork 564

■ INTERIORS 565

- Seats And Fabric Parts 565
- Plastic And Coated Parts. 566
- Leather Parts 566
- Glass Surfaces 567

SCHEDULED SERVICING

Your vehicle is equipped with an automatic oil change indicator system. The oil change indicator system will remind you that it is time to take your vehicle in for scheduled maintenance.

Based on engine operation conditions, the oil change indicator message will illuminate. This means that service is required for your vehicle. Operating conditions such as frequent short-trips, trailer tow, extremely hot or cold ambient temperatures will influence when the "Oil Change Required" message is displayed. Severe Operating Conditions can cause the change oil message to illuminate as early as 3,500 miles (5,600 km) since last reset. Have your vehicle serviced as soon as possible, within the next 500 miles (805 km).

Your authorized dealer will reset the oil change indicator message after completing the scheduled oil change. If a scheduled oil change is performed by someone other than your authorized dealer, the message can be reset by referring to "Instrument Cluster Display" in "Getting To Know Your Instrument Panel".

NOTE: Under no circumstances should oil change intervals exceed 10,000 miles (16,000 km), 12 months or 350 hours of engine run time, whichever comes first. The 350 hours of engine run or idle time is generally only a concern for fleet customers.

Severe Duty All Models

Change Engine Oil at 4,000 miles (6,500 km) or 350 hours of engine run time if the vehicle is operated in a dusty and off road environment or is operated predominately at idle or only very low engine RPM's. This type of vehicle use is considered Severe Duty.

Once A Month Or Before A Long Trip:

- Check engine oil level.
- Check windshield washer fluid level.
- Check tire pressure and look for unusual wear or damage. Rotate tires at the first sign of irregular wear, even if it occurs before the oil indicator system turns on.
- Check the fluid levels of the coolant reservoir and brake master cylinder, fill as needed.
- Check function of all interior and exterior lights.

Maintenance Plan

Required Maintenance Intervals

Refer to the required maintenance intervals on the following page.

At Every Oil Change Interval As Indicated By Oil Change Indicator System:
• Change oil and filter
• Rotate the tires **Rotate at the first sign of irregular wear, even if it occurs before the oil indicator system turns on**
• Inspect battery and clean and tighten terminals as required
• Inspect brake pads, shoes, rotors, drums, hoses and park brake
• Inspect engine cooling system protection and hoses
• Inspect exhaust system
• Inspect engine air cleaner if using in dusty or off-road conditions

Mileage or time passed (whichever comes first)	20,000	30,000	40,000	50,000	60,000	70,000	80,000	90,000	100,000	110,000	120,000	130,000	140,000	150,000
Or Years:	2	3	4	5	6	7	8	9	10	11	12	13	14	15
Or Kilometers:	32,000	48,000	64,000	80,000	96,000	112,000	128,000	144,000	160,000	176,000	192,000	208,000	224,000	240,000
Additional Inspections														
Inspect the CV joints.	X		X		X		X		X		X		X	
Inspect front suspension, boot seals, tie rod ends, and replace if necessary.	X		X		X		X		X		X		X	
Inspect the brake linings, parking brake function.	X		X		X		X		X		X		X	
Inspect front accessory drive belt, tensioner, idler pulley, and replace if necessary														X
Additional Maintenance														
Replace engine air cleaner filter.		X			X			X			X			X
Replace air conditioning/cabin air filter.	X		X		X		X		X		X		X	
Replace spark plugs**									X					
Flush and replace the engine coolant at 10 years or 150,000 miles (240,000 km) whichever comes first.									X					X
Inspect and replace PCV valve if necessary.									X					

** The spark plug change interval is mileage based only, yearly intervals do not apply.

WARNING!

- **You can be badly injured working on or around a motor vehicle. Do only service work for which you have the knowledge and the right equipment. If you have any doubt about your ability to perform a service job, take your vehicle to a competent mechanic.**
- **Failure to properly inspect and maintain your vehicle could result in a component malfunction and effect vehicle handling and performance. This could cause an accident.**

Heavy Duty Use Of The Vehicle

Change engine oil at 4,000 miles (6,500 km) or 350 hours of engine run time if the vehicle is operated in a dusty and off road environment or is operated predominately at idle or only very low engine RPM's. This type of vehicle use is considered Severe Duty.

ENGINE COMPARTMENT

3.6L Engine

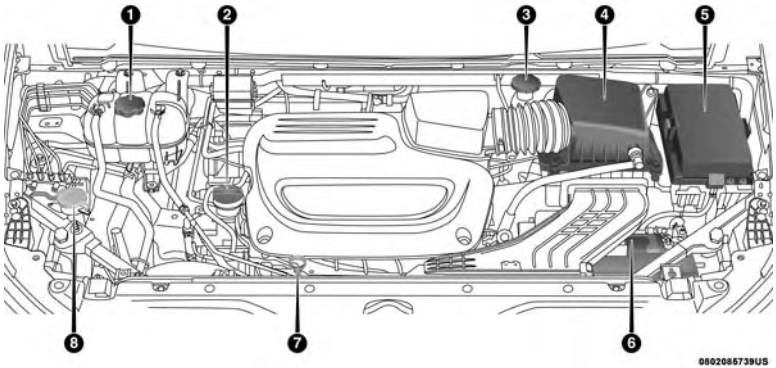

1 — Engine Coolant Pressure Cap
2 — Engine Oil Fill
3 — Brake Fluid Reservoir
4 — Engine Air Cleaner
5 — Power Distribution Center (Fuses)
6 — Battery
7 — Engine Oil Dipstick
8 — Windshield Washer Fill

Checking Oil Level

To assure proper engine lubrication, the engine oil must be maintained at the correct level. Check the oil level at regular intervals, such as every fuel stop. The best time to check the engine oil level is about five minutes after a fully warmed engine is shut OFF.

Checking the oil while the vehicle is on level ground will improve the accuracy of the oil level readings. Maintain the oil level between the MIN and MAX markings on the dipstick. Adding one quart or one liter of oil when the reading is at the MIN mark will result in a MAX reading on these engines.

CAUTION!

- **Overfilling or underfilling will cause oil aeration, or loss of oil pressure. This could damage your engine.**
- **Never use Non-Detergent Oil or Straight Mineral Oil in the engine or damage may result.**

Adding Washer Fluid

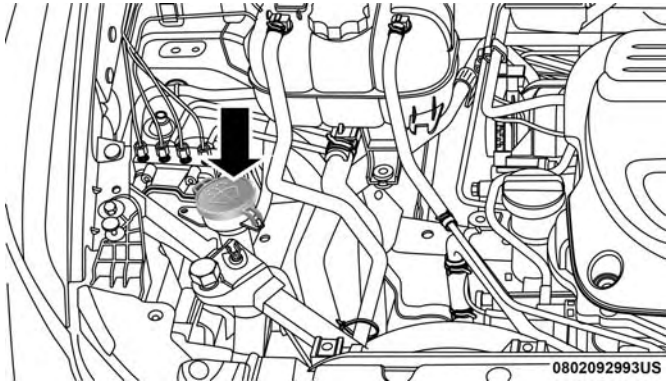

Windshield Washer Fluid Cap

The fluid reservoir is located in the front of the engine compartment. Be sure to check the fluid level in the reservoir at regular intervals. Fill the reservoir with windshield washer solvent (not radiator antifreeze) and operate the system for a few seconds to flush out the residual washer fluid.

When refilling the washer fluid reservoir, take some washer fluid, apply it to a cloth or towel, and wipe clean the wiper blades; this will help blade performance.

To prevent freeze-up of your windshield washer system in cold weather, select a solution or mixture that meets or exceeds the temperature range of your climate. This rating information can be found on most washer fluid containers.

WARNING!

Commercially available windshield washer solvents are flammable. They could ignite and burn you. Care must be exercised when filling or working around the washer solution.

Maintenance-Free Battery

Your vehicle is equipped with a maintenance-free battery. You will never have to add water, nor is periodic maintenance required.

WARNING!

- **Battery fluid is a corrosive acid solution and can burn or even blind you. Do not allow battery fluid to contact your eyes, skin, or clothing. Do not lean over a battery when attaching clamps. If acid splashes in eyes or on skin, flush the area immediately with**

(Continued)

WARNING! *(Continued)*

large amounts of water. Refer to "Jump Starting Procedure" in "In Case Of Emergency" for further information.

- **Battery gas is flammable and explosive. Keep flame or sparks away from the battery. Do not use a booster battery or any other booster source with an output greater than 12 Volts. Do not allow cable clamps to touch each other.**
- **Battery posts, terminals, and related accessories contain lead and lead compounds. Wash hands after handling.**

CAUTION!

- **It is essential when replacing the cables on the battery that the positive cable is attached to the positive post and the negative cable is attached to the negative post. Battery posts are marked positive (+) and negative (-) and are identified on the battery case. Cable clamps should be tight on the terminal posts and free of corrosion.**

(Continued)

CAUTION! *(Continued)*

- **If a "fast charger" is used while the battery is in the vehicle, disconnect both vehicle battery cables before connecting the charger to the battery. Do not use a "fast charger" to provide starting voltage.**

DEALER SERVICE

An authorized dealer has the qualified service personnel, special tools, and equipment to perform all service operations in an expert manner. Service Manuals are available which include detailed service information for your vehicle. Refer to these Service Manuals before attempting any procedure yourself.

NOTE: Intentional tampering with emissions control systems may void your warranty and could result in civil penalties being assessed against you.

WARNING!

You can be badly injured working on or around a motor vehicle. Only do service work for which you

(Continued)

WARNING! *(Continued)*

have the knowledge and the proper equipment. If you have any doubt about your ability to perform a service job, take your vehicle to a competent mechanic.

Engine Oil

Change Engine Oil

Refer to "Scheduled Servicing" in this section for the proper maintenance intervals.

NOTE: Under no circumstances should oil change intervals exceed 10,000 miles (16,000 km), 12 months or 350 hours of engine run time, whichever comes first. The 350 hours of engine run or idle time is generally only a concern for fleet customers.

Gasoline Engine Oil Selection

For best performance and maximum protection under all types of operating conditions, the manufacturer only recommends engine oils that are API Certified and meet the requirements of FCA Material Standard MS-6395.

American Petroleum Institute (API) Engine Oil Identification Symbol

This symbol means that the oil has been certified by the American Petroleum Institute (API). The manufacturer only recommends API Certified engine oils.

This symbol certifies 0W-20, 5W-20, 0W-30, 5W-30 and 10W-30 engine oils.

CAUTION!

Do not use chemical flushes in your engine oil as the chemicals can damage your engine. Such damage is not covered by the New Vehicle Limited Warranty.

Engine Oil Viscosity

Mopar SAE 0W-20 engine oil approved to FCA Material Standard MS-6395 such as Pennzoil, Shell Helix or equivalent is recommended for all operating temperatures. This engine oil improves low temperature starting and vehicle fuel economy.

The engine oil filler cap also shows the recommended engine oil viscosity for your engine. For information on engine oil filler cap location, refer to the "Engine Compartment" illustration in this section.

Lubricants which do not have both the engine oil certification mark and the correct SAE viscosity grade number should not be used.

Synthetic Engine Oils

You may use synthetic engine oils provided the recommended oil quality requirements are met, and the recommended maintenance intervals for oil and filter changes are followed.

Synthetic engine oils which do not have both the engine oil certification mark and the correct SAE viscosity grade number should not be used.

Materials Added To Engine Oil

The manufacturer strongly recommends against the addition of any additives (other than leak detection dyes) to the engine oil. Engine oil is an engineered product and its performance may be impaired by supplemental additives.

Disposing Of Used Engine Oil And Oil Filters

Care should be taken in disposing of used engine oil and oil filters from your vehicle. Used oil and oil filters, indiscriminately discarded, can present a problem to the environment. Contact an authorized dealer, service station or governmental agency for advice on how and where used oil and oil filters can be safely discarded in your area.

Engine Oil Filter

The engine oil filter should be replaced with a new filter at every engine oil change.

Engine Oil Filter Selection

This manufacturer's engines have a full-flow type disposable oil filter. Use a filter of this type for replacement. The quality of replacement filters varies considerably. Only high quality filters should be used to assure most efficient service. Mopar engine oil filters are high quality oil filters and are recommended.

Engine Air Cleaner Filter

Refer to the "Maintenance Plan" in this section for the proper maintenance intervals.

NOTE: Be sure to follow the "Severe Duty Conditions" maintenance interval if applicable.

WARNING!

The air induction system (air cleaner, hoses, etc.) can provide a measure of protection in the case of engine backfire. Do not remove the air induction system (air cleaner, hoses, etc.) unless such removal is necessary for repair or maintenance. Make sure that no one is near the engine compartment before starting the vehicle with the air induction system (air cleaner, hoses, etc.) removed. Failure to do so can result in serious personal injury.

Engine Air Cleaner Filter Selection

The quality of replacement engine air cleaner filters varies considerably. Only high quality filters should be used to assure most efficient service. Mopar engine air cleaner filters are a high quality filter and are recommended.

Accessory Drive Belt Inspection

WARNING!

- **Do not attempt to inspect an accessory drive belt with vehicle running.**
- **When working near the radiator cooling fan, disconnect the fan motor lead. The fan is temperature controlled and can start at any time regardless of ignition mode. You could be injured by the moving fan blades.**
- **You can be badly injured working on or around a motor vehicle. Only do service work for which you have the knowledge and the proper equipment. If you have any doubt about your ability to perform a service job, take your vehicle to a competent mechanic.**

When inspecting accessory drive belts, small cracks that run across ribbed surface of belt from rib to rib, are considered normal. These are not a reason to replace belt. However, cracks running along a rib (not across) are not normal. Any belt with cracks running along a rib must be replaced. Also have the belt replaced if it has excessive wear, frayed cords or severe glazing.

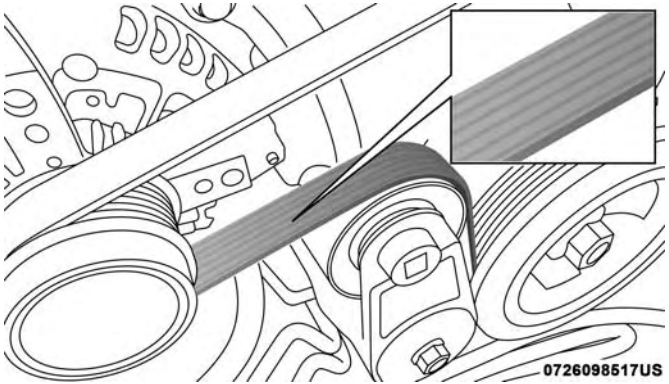

Accessory Belt (Serpentine Belt)

Conditions that would require replacement:

- Rib chunking (one or more ribs has separated from belt body)
- Rib or belt wear
- Longitudinal belt cracking (cracks between two ribs)
- Belt slips
- “Groove jumping” (belt does not maintain correct position on pulley)
- Belt broken (note: identify and correct problem before new belt is installed)

- Noise (objectionable squeal, squeak, or rumble is heard or felt while drive belt is in operation)

Some conditions can be caused by a faulty component such as a belt pulley. Belt pulleys should be carefully inspected for damage and proper alignment.

Belt replacement on some models requires the use of special tools, we recommend having your vehicle serviced at an authorized dealer.

Air Conditioner Maintenance

For best possible performance, your air conditioner should be checked and serviced by an authorized dealer at the start of each warm season. This service should include cleaning of the condenser fins and a performance test. Drive belt tension should also be checked at this time.

WARNING!

- **Use only refrigerants and compressor lubricants approved by the manufacturer for your air conditioning system. Some unapproved refrigerants are flammable and can explode, injuring you. Other unapproved refrigerants or lubricants can cause the system to fail, requiring costly repairs. Refer to Warranty Information**

(Continued)

WARNING! *(Continued)*

Book, located in your owner's information kit, for further warranty information.

- **The air conditioning system contains refrigerant under high pressure. To avoid risk of personal injury or damage to the system, adding refrigerant or any repair requiring lines to be disconnected should be done by an experienced technician.**

CAUTION!

Do not use chemical flushes in your air conditioning system as the chemicals can damage your air conditioning components. Such damage is not covered by the New Vehicle Limited Warranty.

Refrigerant Recovery And Recycling — R–1234yf

R–1234yf Air Conditioning Refrigerant is a hydrofluoroolefin (HFO) that is endorsed by the Environmental Protection Agency and is an ozone-friendly substance with a low global-warming potential. The manufacturer

recommends that air conditioning service be performed by an authorized dealer using recovery and recycling equipment.

NOTE: Use only manufacturer approved A/C system PAG compressor oil, and refrigerants.

Air Conditioning Filter Replacement (Cabin Air Filter)

WARNING!

Do not remove the cabin air filter while the vehicle is running, or while the ignition is in the ACC or ON/RUN mode. With the cabin air filter removed and the blower operating, the blower can contact hands and may propel dirt and debris into your eyes, resulting in personal injury.

The cabin air filter is located in the fresh air inlet behind the glove compartment. Perform the following procedure to replace the filter:

1. Remove all contents from the glove compartment.

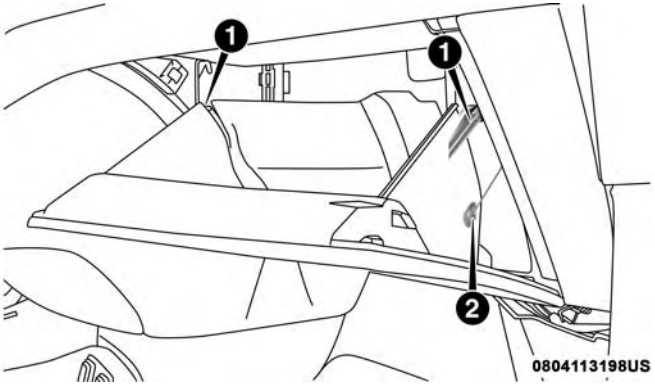

Glove Compartment

1 — Glove Compartment Travel Stops
2 — Glove Compartment Tension Tether Clip

2. Open the glove compartment door partially, leaving extra slack on the glove compartment tension tether. Detach the glove compartment tension tether by sliding the black tension tether clip down, and popping it out of the slot on the side of the glove compartment door.
3. There are glove compartment travel stops on either side of the glove compartment door. To release them, push

inward on each travel stop, and pull the glove compartment door down until the travel stops pass clear of their hooking points.

4. Open the glove compartment door as far as possible to gain access to the cabin air filter compartment cover.

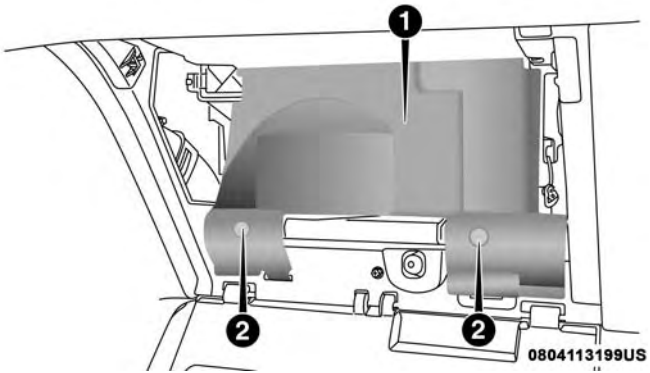

Cabin Air Filter Compartment Cover

1 — Compartment Cover
2 — Compartment Snap

5. Pry up the lid of each individual compartment snap, and detach it from the rest of the snap. There is a small space on the side of each snap to use for separating the lid from the snap. Once detached, remove the rest of the snap completely from the compartment cover.

6. After removing the snaps, lift up the compartment cover to gain access to the fresh air inlet.

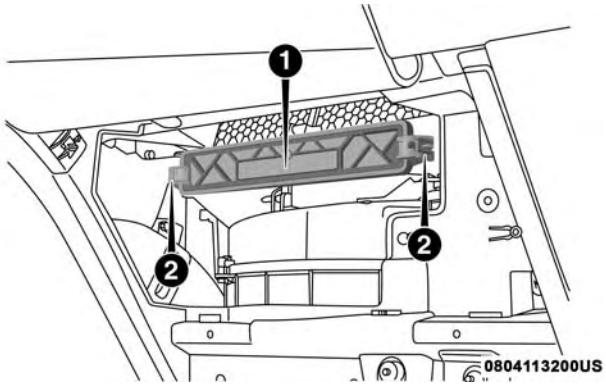

Fresh Air Inlet

1 — Filter Cover
2 — Retaining Tab

7. Remove the filter cover by prying back each of the retaining tabs from their hooking points, and then

pulling out the filter cover to expose the cabin air filter. Remove the air filter by pulling it straight out of the housing.

8. Install the new air filter with the arrow on the filter pointing toward the floor.

CAUTION!

The cabin air filter is identified with an arrow to indicate airflow direction through the filter. Failure to properly install the filter will result in the need to replace it more often.

9. Once the filter is replaced, reinstall the filter cover, making sure the retaining tabs are fully secured into their housings.
10. Close the cabin air filter compartment cover, and reinsert the snaps into their slots. Push the snap lids until fully attached.
11. Push the glove compartment door to the near closed position to reengage the glove compartment travel stops. Finally, pull the glove compartment tension tether clip down and slide it back into the slot on the side of the glove compartment door.

Body Lubrication

Locks and all body pivot points, including such items as seat tracks, door hinge pivot points and rollers, liftgate, tailgate, decklid, sliding doors and hood hinges, should be lubricated periodically with a lithium based grease, such as Mopar Spray White Lube to assure quiet, easy operation and to protect against rust and wear. Prior to the application of any lubricant, the parts concerned should be wiped clean to remove dust and grit; after lubricating excess oil and grease should be removed. Particular attention should also be given to hood latching components to ensure proper function. When performing other underhood services, the hood latch, release mechanism and safety catch should be cleaned and lubricated.

The external lock cylinders should be lubricated twice a year, preferably in the Fall and Spring. Apply a small amount of a high quality lubricant, such as Mopar Lock Cylinder Lubricant directly into the lock cylinder.

Windshield Wiper Blades

Clean the rubber edges of the wiper blades and the windshield periodically with a sponge or soft cloth and a mild nonabrasive cleaner. This will remove accumulations of salt or road film.

Operation of the wipers on dry glass for long periods may cause deterioration of the wiper blades. Always use washer fluid when using the wipers to remove salt or dirt from a dry windshield.

Avoid using the wiper blades to remove frost or ice from the windshield. Keep the blade rubber out of contact with petroleum products such as engine oil, gasoline, etc.

NOTE: Life expectancy of wiper blades varies depending on geographical area and frequency of use. Poor performance of blades may be present with chattering, marks, water lines or wet spots. If any of these conditions are present, clean the wiper blades or replace as necessary.

The wiper blades and wiper arms should be inspected periodically, not just when wiper performance problems are experienced. This inspection should include the following points:

- Wear or uneven edges
- Foreign material
- Hardening or cracking
- Deformation or fatigue

If a wiper blade or wiper arm is damaged, replace the affected wiper arm or blade with a new unit. Do not attempt to repair a wiper arm or blade that is damaged.

Front Wiper Blade Removal/Installation

CAUTION!

Do not allow the wiper arm to spring back against the glass without the wiper blade in place or the glass may be damaged.

1. Lift the wiper arm to raise the wiper blade off of the glass, until the wiper arm is in the full up position.

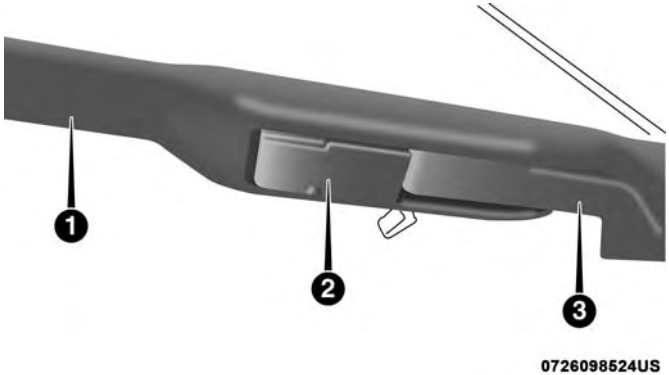

Wiper Blade With Release Tab In Locked Position

1 — Wiper Blade
2 — Release Tab
3 — Wiper Arm

2. To disengage the wiper blade from the wiper arm, flip up the release tab on the wiper blade and while holding the wiper arm with one hand, slide the wiper blade down towards the base of the wiper arm.

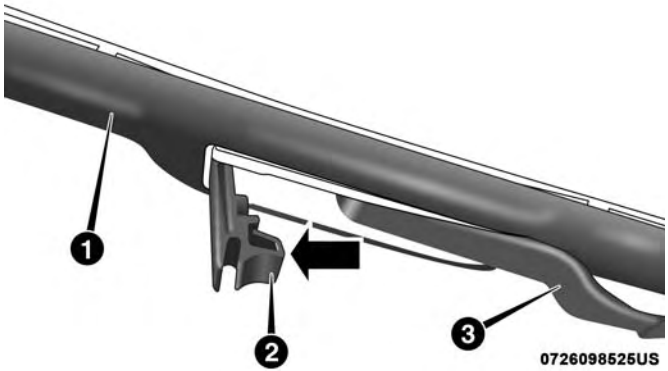

Wiper Blade With Release Tab In Unlocked Position

1 — Wiper Blade
2 — Release Tab
3 — Wiper Arm

3. With the wiper blade disengaged, remove the wiper blade from the wiper arm by holding the wiper arm with one hand and separating the wiper blade from the wiper arm with the other hand (move the wiper blade

toward the right side of the vehicle to separate the wiper blade from the wiper arm).

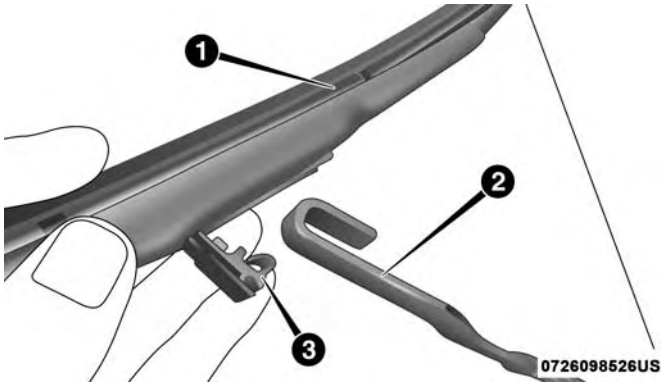

Wiper Blade Removed From Wiper Arm

1 — Wiper Blade
2 — Wiper Arm
3 — Release Tab

4. Gently lower the wiper arm onto the glass.

Installing The Front Wipers

1. Lift the wiper arm off of the glass, until the wiper arm is in the full up position.
2. Position the wiper blade near the hook on the tip of the wiper arm with the wiper release tab open and the blade side of the wiper facing up and away from the windshield.
3. Insert the hook on the tip of the arm through the opening in the wiper blade under the release tab.
4. Slide the wiper blade up into the hook on the wiper arm and rotate the wiper blade until it is flush against the wiper arm. Fold down the latch release tab and snap it into its locked position. Latch engagement will be accompanied by an audible click.
5. Gently lower the wiper blade onto the glass.

Rear Wiper Blade Removal/Installation

1. Lift the rear wiper arm pivot cap away from the glass to allow the rear wiper blade to be raised off of the glass.

NOTE: The rear wiper arm cannot be fully raised off the glass unless the wiper arm pivot cap is unsnapped first. Attempting to fully raise the rear wiper arm without unsnapping the wiper arm pivot cap may damage the vehicle.

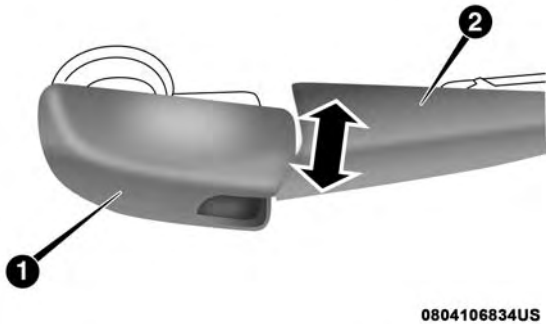

Wiper Pivot Cap In Unlocked Position

1 — Wiper Arm Pivot Cap
2 — Wiper Arm

2. Lift the rear wiper arm fully off the glass.

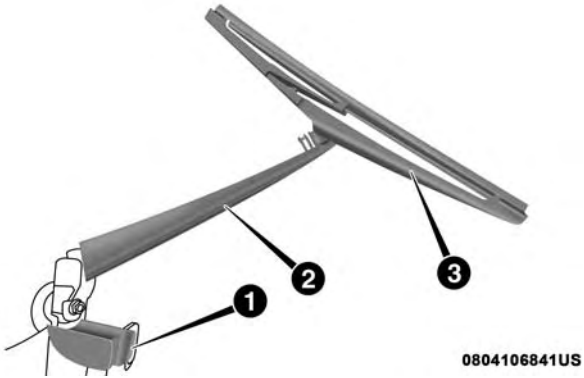

Wiper Blade In Folded Out Position

1 — Wiper Arm Pivot Cap
2 — Wiper Arm
3 — Wiper Blade

3. To remove the wiper blade from the wiper arm, grasp the bottom end of the wiper blade nearest to wiper arm with your right hand. With your left hand hold the wiper arm as you pull the wiper blade away from the wiper arm past its stop far enough to unsnap the wiper blade pivot pin from the receptacle on the end of the wiper arm.

NOTE: Resistance will be accompanied by an audible snap.

4. Still grasping the bottom end of the wiper blade, move the wiper blade upward and away from the wiper arm to disengage.

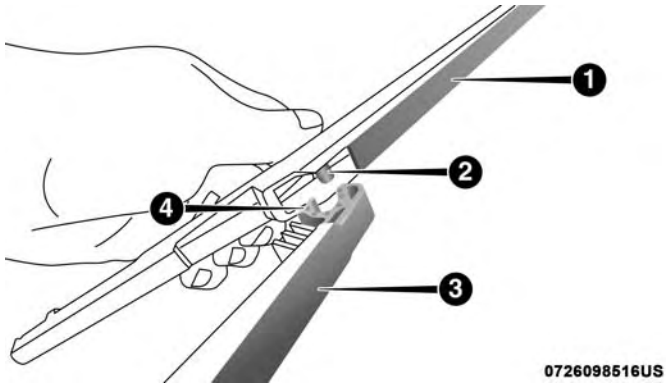

Wiper Blade Removed From Wiper Arm

1 — Wiper Blade
2 — Wiper Blade Pivot Pin
3 — Wiper Arm
4 — Wiper Arm Receptacle

5. Gently lower the tip of the wiper arm onto the glass.

Installing The Rear Wiper

1. Lift the rear wiper arm pivot cap away from the glass to allow the rear wiper blade to be raised off of the glass.

NOTE: The rear wiper arm cannot be fully raised off the glass unless the wiper arm pivot cap is unsnapped first. Attempting to fully raise the rear wiper arm without unsnapping the wiper arm pivot cap may damage the vehicle.

2. Lift the rear wiper arm fully off the glass.
3. Insert the wiper blade pivot pin into the opening on the end of the wiper arm. Grab the bottom end of the wiper arm with one hand, and press the wiper blade flush with the wiper arm until it snaps into place.
4. Lower the wiper blade onto the glass and snap the wiper arm pivot cap back into place.

Exhaust System

The best protection against carbon monoxide entry into the vehicle body is a properly maintained engine exhaust system.

If you notice a change in the sound of the exhaust system; or if the exhaust fumes can be detected inside the vehicle; or when the underside or rear of the vehicle is damaged; have an authorized technician inspect the complete exhaust system and adjacent body areas for broken, damaged, deteriorated, or mispositioned parts. Open seams or loose connections could permit exhaust fumes to seep into the passenger compartment. In addition, have the exhaust system inspected each time the vehicle is raised for lubrication or oil change. Replace as required.

WARNING!

- **Exhaust gases can injure or kill. They contain carbon monoxide (CO), which is colorless and odorless. Breathing it can make you unconscious and can eventually poison you. To avoid breathing CO, refer to “Safety Tips” in “Safety” for further information.**
- **A hot exhaust system can start a fire if you park over materials that can burn. Such materials might be grass or leaves coming into contact with your exhaust system. Do not park or operate your vehicle in areas where your exhaust system can contact anything that can burn.**

CAUTION!

- **The catalytic converter requires the use of unleaded fuel only. Leaded gasoline will destroy the effectiveness of the catalyst as an emissions control device and may seriously reduce engine performance and cause serious damage to the engine.**
- **Damage to the catalytic converter can result if your vehicle is not kept in proper operating condition. In the event of engine malfunction, particularly involving engine misfire or other apparent loss of performance, have your vehicle serviced promptly. Continued operation of your vehicle with a severe malfunction could cause the converter to overheat, resulting in possible damage to the converter and vehicle.**

Under normal operating conditions, the catalytic converter will not require maintenance. However, it is important to keep the engine properly tuned to assure proper catalyst operation and prevent possible catalyst damage.

NOTE: Intentional tampering with emissions control systems can result in civil penalties being assessed against you.

In unusual situations involving grossly malfunctioning engine operation, a scorching odor may suggest severe and abnormal catalyst overheating. If this occurs, stop the vehicle, turn off the engine and allow it to cool. Service, including a tune-up to manufacturer's specifications, should be obtained immediately.

To minimize the possibility of catalytic converter damage:

- Do not interrupt the ignition when the transmission is in gear and the vehicle is in motion.
- Do not try to start the vehicle by pushing or towing the vehicle.
- Do not idle the engine with any ignition components disconnected or removed, such as when diagnostic testing, or for prolonged periods during very rough idle or malfunctioning operating conditions.

Cooling System

WARNING!

- **You or others can be badly burned by hot engine coolant (antifreeze) or steam from your radiator. If you see or hear steam coming from under the hood,**

(Continued)

WARNING! ***(Continued)***

do not open the hood until the radiator has had time to cool. Never open a cooling system pressure cap when the radiator or coolant bottle is hot.

- **Keep hands, tools, clothing, and jewelry away from the radiator cooling fan when the hood is raised. The fan starts automatically and may start at any time, whether the engine is running or not.**
- **When working near the radiator cooling fan, disconnect the fan motor lead or turn the ignition to the OFF mode. The fan is temperature controlled and can start at any time the ignition is in the ON mode.**

Engine Coolant Checks

Check the engine coolant (antifreeze) protection every 12 months (before the onset of freezing weather, where applicable). If the engine coolant (antifreeze) is dirty, the system should be drained, flushed, and refilled with fresh OAT coolant (conforming to MS.90032) by an authorized dealer. Check the front of the A/C condenser for any accumulation of bugs, leaves, etc. If dirty, clean by gently spraying water from a garden hose vertically down the face of the condenser.

Check the engine cooling system hoses for brittle rubber, cracking, tears, cuts, and tightness of the connection at the coolant recovery bottle and radiator. Inspect the entire system for leaks. DO NOT REMOVE THE COOLANT PRESSURE CAP WHEN THE COOLING SYSTEM IS HOT.

Cooling System — Drain, Flush And Refill

NOTE: Some vehicles require special tools to add coolant properly. Failure to fill these systems properly could lead to severe internal engine damage. If any coolant is needed to be added to the system please contact an authorized dealer.

If the engine coolant (antifreeze) is dirty or contains visible sediment, have an authorized dealer clean and flush with OAT coolant (antifreeze) (conforming to MS.90032).

Refer to the “Maintenance Plan” in this section for the proper maintenance intervals.

Selection Of Coolant

Refer to “Fluids And Lubricants” in “Technical Specifications” for further information.

NOTE:

- Mixing of engine coolant (antifreeze) other than specified Organic Additive Technology (OAT) engine coolant (antifreeze), may result in engine damage and may decrease corrosion protection. Organic Additive Technology (OAT) engine coolant is different and should not be mixed with Hybrid Organic Additive Technology (HOAT) engine coolant (antifreeze) or any "globally compatible" coolant (antifreeze). If a non-OAT engine coolant (antifreeze) is introduced into the cooling system in an emergency, the cooling system will need to be drained, flushed, and refilled with fresh OAT coolant (conforming to MS.90032), by an authorized dealer as soon as possible.
- Do not use water alone or alcohol-based engine coolant (antifreeze) products. Do not use additional rust inhibitors or antirust products, as they may not be compatible with the radiator engine coolant and may plug the radiator.
- This vehicle has not been designed for use with propylene glycol-based engine coolant (antifreeze). Use of propylene glycolbased engine coolant (antifreeze) is not recommended.
- Some vehicles require special tools to add coolant properly. Failure to fill these systems properly could lead to severe internal engine damage. If any coolant is needed to be added to the system please contact an authorized dealer.

Adding Coolant

Your vehicle has been built with an improved engine coolant (OAT coolant conforming to MS.90032) that allows extended maintenance intervals. This engine coolant (antifreeze) can be used up to ten years or 150,000 miles (240,000 km) before replacement. To prevent reducing this extended maintenance period, it is important that you use the same engine coolant (OAT coolant conforming to MS.90032) throughout the life of your vehicle.

Please review these recommendations for using Organic Additive Technology (OAT) engine coolant (antifreeze) that meets the requirements of FCA Material Standard MS.90032. When adding engine coolant (antifreeze):

- We recommend using Mopar Antifreeze/Coolant 10 Year/150,000 Mile (240,000 km) Formula OAT (Organic Additive Technology) that meets the requirements of FCA Material Standard MS.90032.

- Mix a minimum solution of 50% OAT engine coolant that meets the requirements of FCA Material Standard MS.90032 and distilled water. Use higher concentrations (not to exceed 70%) if temperatures below –34°F (–37°C) are anticipated. Please contact an authorized dealer for assistance.
- Use only high purity water such as distilled or deionized water when mixing the water/engine coolant (antifreeze) solution. The use of lower quality water will reduce the amount of corrosion protection in the engine cooling system.

NOTE:

- It is the owner's responsibility to maintain the proper level of protection against freezing according to the temperatures occurring in the area where the vehicle is operated.
- Some vehicles require special tools to add coolant properly. Failure to fill these systems properly could lead to severe internal engine damage. If any coolant is needed to be added to the system, please contact a local authorized dealer.
- Mixing engine coolant (antifreeze) types is not recommended and can result in cooling system damage. If HOAT and OAT coolant are mixed in an emergency, have a authorized dealer drain, flush, and refill with OAT coolant (conforming to MS.90032) as soon as possible.

Cooling System Pressure Cap

The cap must be fully tightened to prevent loss of engine coolant (antifreeze), and to ensure that engine coolant (antifreeze) will return to the radiator from the coolant expansion bottle/recovery tank if so equipped.

The cap should be inspected and cleaned if there is any accumulation of foreign material on the sealing surfaces.

WARNING!

- **Do not open hot engine cooling system. Never add engine coolant (antifreeze) when the engine is overheated. Do not loosen or remove the cap to cool an overheated engine. Heat causes pressure to build up in the cooling system. To prevent scalding or injury, do not remove the pressure cap while the system is hot or under pressure.**
- **Do not use a pressure cap other than the one specified for your vehicle. Personal injury or engine damage may result.**

Disposal Of Used Coolant

Used ethylene glycol-based coolant (antifreeze) is a regulated substance requiring proper disposal. Check with your local authorities to determine the disposal rules for your community. To prevent ingestion by animals or children, do not store ethylene glycol-based coolant in open containers or allow it to remain in puddles on the ground. If ingested by a child or pet, seek emergency assistance immediately. Clean up any ground spills immediately.

Coolant Level

The coolant expansion bottle provides a quick visual method for determining that the coolant level is adequate. With the engine off and cold, the level of the coolant (antifreeze) in the bottle should be between the "MAX" and "MIN" lines marked on the bottle.

As long as the engine operating temperature is satisfactory, the coolant bottle need only be checked once a month.

When additional coolant (antifreeze) is needed to maintain the proper level, it should be added to the coolant bottle. Do not overfill.

See an authorized dealer for service.

Points To Remember

NOTE: When the vehicle is stopped after a few miles/kilometers of operation, you may observe vapor coming from the front of the engine compartment. This is normally a result of moisture from rain, snow, or high humidity accumulating on the radiator and being vaporized when the thermostat opens, allowing hot engine coolant (antifreeze) to enter the radiator.

If an examination of your engine compartment shows no evidence of radiator or hose leaks, the vehicle may be safely driven. The vapor will soon dissipate.

- Do not overfill the coolant expansion bottle.
- Check the coolant freeze point in the radiator and in the coolant expansion bottle. If engine coolant (antifreeze) needs to be added, the contents of the coolant expansion bottle must also be protected against freezing.
- If frequent engine coolant (antifreeze) additions are required, the cooling system should be pressure tested for leaks.
- Maintain engine coolant (antifreeze) concentration at a minimum of 50% OAT coolant (conforming to

MS.90032) and distilled water for proper corrosion protection of your engine which contains aluminum components.

- Make sure that the coolant expansion bottle overflow hoses are not kinked or obstructed.
- Keep the front of the radiator clean. If your vehicle is equipped with air conditioning, keep the front of the condenser clean.
- Do not change the thermostat for Summer or Winter operation. If replacement is ever necessary, install ONLY the correct type thermostat. Other designs may result in unsatisfactory engine coolant (antifreeze) performance, poor gas mileage, and increased emissions.

Brake System

In order to assure brake system performance, all brake system components should be inspected periodically. Refer to the "Maintenance Plan" in this section for the proper maintenance intervals.

WARNING!

Riding the brakes can lead to brake failure and possibly a collision. Driving with your foot resting or riding on the brake pedal can result in abnormally high brake temperatures, excessive lining wear, and possible brake damage. You would not have your full braking capacity in an emergency.

Brake Master Cylinder

The fluid in the master cylinder should be checked when performing under hood services or immediately if the "Brake Warning Light" is illuminated.

Be sure to clean the top of the master cylinder area before removing the cap. If necessary, add fluid to bring the fluid level up to the requirements described on the brake fluid reservoir. With disc brakes, fluid level can be expected to fall as the brake pads wear. Brake fluid level should be checked when pads are replaced. However, low fluid level may be caused by a leak and a checkup may be needed.

Use only manufacturer's recommended brake fluid. Refer to "Fluids And Lubricants" in "Technical Specifications" for further information.

WARNING!

- **Use only manufacturer's recommended brake fluid. Refer to "Fluids And Lubricants" in "Technical Specifications" for further information. Using the wrong type of brake fluid can severely damage your brake system and/or impair its performance. The proper type of brake fluid for your vehicle is also identified on the original factory installed hydraulic master cylinder reservoir.**
- **To avoid contamination from foreign matter or moisture, use only new brake fluid or fluid that has been in a tightly closed container. Keep the master cylinder reservoir cap secured at all times. Brake fluid in a open container absorbs moisture from the air resulting in a lower boiling point. This may cause it to boil unexpectedly during hard or prolonged braking, resulting in sudden brake failure. This could result in a collision.**
- **Overfilling the brake fluid reservoir can result in spilling brake fluid on hot engine parts, causing the brake fluid to catch fire. Brake fluid can also damage painted and vinyl surfaces, care should be taken to avoid its contact with these surfaces.**

(Continued)

WARNING! *(Continued)*

- **Do not allow petroleum based fluid to contaminate the brake fluid. Brake seal components could be damaged, causing partial or complete brake failure. This could result in a collision.**

Automatic Transmission

Selection Of Lubricant

It is important to use the proper transmission fluid to ensure optimum transmission performance and life. Use only the manufacturer's specified transmission fluid. Refer to "Fluids And Lubricants" in "Technical Specifications" for fluid specifications. It is important to maintain the transmission fluid at the correct level using the recommended fluid.

NOTE: No chemical flushes should be used in any transmission; only the approved lubricant should be used.

CAUTION!

Using a transmission fluid other than the manufacturer's recommended fluid may cause deterioration in

(Continued)

CAUTION! *(Continued)*

transmission shift quality and/or torque converter shudder. Refer to "Fluids And Lubricants" in "Technical Specifications" for fluid specifications.

Special Additives

The manufacturer strongly recommends against using any special additives in the transmission. Automatic Transmission Fluid (ATF) is an engineered product and its performance may be impaired by supplemental additives. Therefore, do not add any fluid additives to the transmission. Avoid using transmission sealers as they may adversely affect seals.

CAUTION!

Do not use chemical flushes in your transmission as the chemicals can damage your transmission components. Such damage is not covered by the New Vehicle Limited Warranty.

Fluid Level Check

The fluid level is preset at the factory and does not require adjustment under normal operating conditions. Routine fluid level checks are not required; therefore the transmission has no dipstick. An authorized dealer can check your transmission fluid level using special service tools. If you notice fluid leakage or transmission malfunction, visit an authorized dealer immediately to have the transmission fluid level checked. Operating the vehicle with an improper fluid level can cause severe transmission damage.

CAUTION!

If a transmission fluid leak occurs, visit an authorized dealer immediately. Severe transmission damage may occur. An authorized dealer has the proper tools to adjust the fluid level accurately.

Fluid And Filter Changes

Under normal operating conditions, the fluid installed at the factory will provide satisfactory lubrication for the life of the vehicle.

Routine fluid and filter changes are not required. However, change the fluid and filter if the fluid becomes contaminated (with water, etc.), or if the transmission is disassembled for any reason.

RAISING THE VEHICLE

In the case where it is necessary to raise the vehicle, go to an authorized dealer or service station.

TIRES

Tire Safety Information

Tire safety information will cover aspects of the following information: Tire Markings, Tire Identification Numbers, Tire Terminology and Definitions, Tire Pressures, and Tire Loading.

Tire Markings

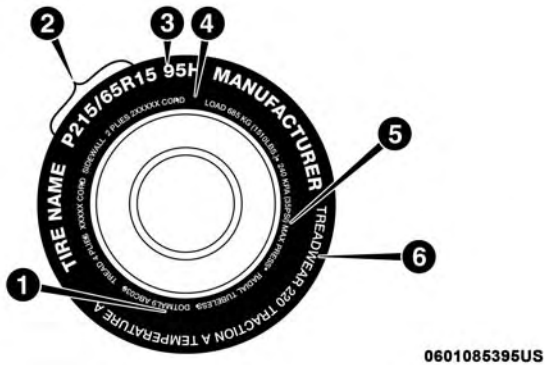

Tire Markings

1 — U.S. DOT Safety Standards Code (TIN)	4 — Maximum Load
2 — Size Designation	5 — Maximum Pressure
3 — Service Description	6 — Treadwear, Traction and Temperature Grades

NOTE:

- P (Passenger) — Metric tire sizing is based on U.S. design standards. P-Metric tires have the letter "P" molded into the sidewall preceding the size designation. Example: P215/65R15 95H.
- European — Metric tire sizing is based on European design standards. Tires designed to this standard have the tire size molded into the sidewall beginning with the section width. The letter "P" is absent from this tire size designation. Example: 215/65R15 96H.
- LT (Light Truck) — Metric tire sizing is based on U.S. design standards. The size designation for LT-Metric tires is the same as for P-Metric tires except for the letters "LT" that are molded into the sidewall preceding the size designation. Example: LT235/85R16.
- Temporary spare tires are designed for temporary emergency use only. Temporary high pressure compact spare tires have the letter "T" or "S" molded into the sidewall preceding the size designation. Example: T145/80D18 103M.
- High flotation tire sizing is based on U.S. design standards and it begins with the tire diameter molded into the sidewall. Example: 31x10.5 R15 LT.

Tire Sizing Chart

EXAMPLE:

Example Size Designation: P215/65R15XL 95H, 215/65R15 96H, LT235/85R16C, T145/80D18 103M, 31x10.5 R15 LT
P = Passenger car tire size based on U.S. design standards, or **"....blank...."** = Passenger car tire based on European design standards, or **LT** = Light truck tire based on U.S. design standards, or **T or S** = Temporary spare tire or **31** = Overall diameter in inches (in)
215, 235, 145 = Section width in millimeters (mm)
65, 85, 80 = Aspect ratio in percent (%) – Ratio of section height to section width of tire, or **10.5** = Section width in inches (in)
R = Construction code – "R" means radial construction, or – "D" means diagonal or bias construction
15, 16, 18 = Rim diameter in inches (in)

EXAMPLE:

Service Description:
95 = Load Index – A numerical code associated with the maximum load a tire can carry
H = Speed Symbol – A symbol indicating the range of speeds at which a tire can carry a load corresponding to its load index under certain operating conditions – The maximum speed corresponding to the speed symbol should only be achieved under specified operating conditions (i.e., tire pressure, vehicle loading, road conditions, and posted speed limits)
Load Identification: Absence of the following load identification symbols on the sidewall of the tire indicates a Standard Load (SL) tire: • **XL** = Extra load (or reinforced) tire, or • **LL** = Light load tire or • **C, D, E, F, G** = Load range associated with the maximum load a tire can carry at a specified pressure
Maximum Load – Maximum load indicates the maximum load this tire is designed to carry
Maximum Pressure – Maximum pressure indicates the maximum permissible cold tire inflation pressure for this tire

Tire Identification Number (TIN)

The TIN may be found on one or both sides of the tire; however, the date code may only be on one side. Tires with white sidewalls will have the full TIN, including the date code, located on the white sidewall side of the tire. Look for the TIN on the outboard side of black sidewall tires as mounted on the vehicle. If the TIN is not found on the outboard side, then you will find it on the inboard side of the tire.

EXAMPLE:
DOT MA L9 ABCD 0301
DOT = Department of Transportation – This symbol certifies that the tire is in compliance with the U.S. Department of Transportation tire safety standards and is approved for highway use
MA = Code representing the tire manufacturing location (two digits)
L9 = Code representing the tire size (two digits)
ABCD = Code used by the tire manufacturer (one to four digits)
03 = Number representing the week in which the tire was manufactured (two digits) – 03 means the 3rd week
01 = Number representing the year in which the tire was manufactured (two digits) – 01 means the year 2001 – Prior to July 2000, tire manufacturers were only required to have one number to represent the year in which the tire was manufactured. Example: 031 could represent the 3rd week of 1981 or 1991

Tire Terminology And Definitions

Term	Definition
B-Pillar	The vehicle B-Pillar is the structural member of the body located behind the front door.
Cold Tire Inflation Pressure	Cold tire inflation pressure is defined as the tire pressure after the vehicle has not been driven for at least three hours, or driven less than 1 mile (1.6 km) after sitting for a minimum of three hours. Inflation pressure is measured in units of PSI (pounds per square inch) or kPa (kilopascals).
Maximum Inflation Pressure	The maximum inflation pressure is the maximum permissible cold tire inflation pressure for this tire. The maximum inflation pressure is molded into the sidewall.
Recommended Cold Tire Inflation Pressure	Vehicle manufacturer's recommended cold tire inflation pressure as shown on the tire placard.
Tire Placard	A label permanently attached to the vehicle describing the vehicle's loading capacity, the original equipment tire sizes and the recommended cold tire inflation pressures.

Tire Loading And Tire Pressure

NOTE: The proper cold tire inflation pressure is listed on the driver's side B-Pillar or the rear edge of the driver's side door.

Check the inflation pressure of each tire, including the spare tire (if equipped), at least monthly and inflate to the recommended pressure for your vehicle.

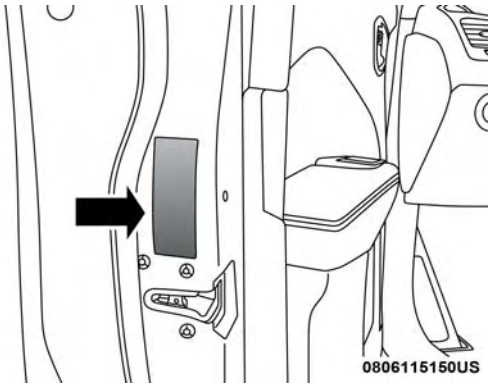

Example Tire Placard Location (Door)

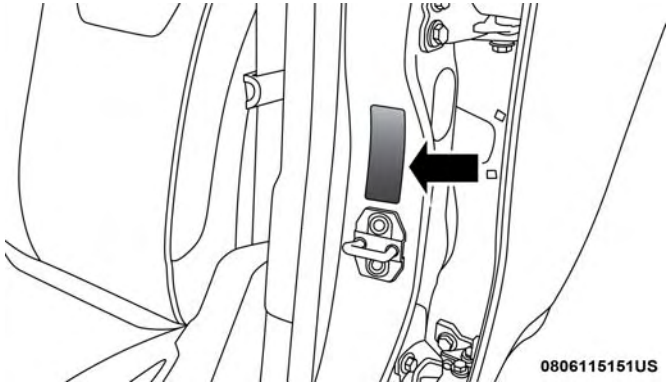

Example Tire Placard Location (B-Pillar)

Tire And Loading Information Placard

Tire And Loading Information Placard

This placard tells you important information about the:

1. Number of people that can be carried in the vehicle.
2. Total weight your vehicle can carry.
3. Tire size designed for your vehicle.
4. Cold tire inflation pressures for the front, rear, and spare tires.

Loading

The vehicle maximum load on the tire must not exceed the load carrying capacity of the tire on your vehicle. You will not exceed the tire's load carrying capacity if you adhere to the loading conditions, tire size, and cold tire inflation pressures specified on the Tire and Loading Information placard in "Vehicle Loading" in the "Starting And Operating" section of this manual.

NOTE: Under a maximum loaded vehicle condition, gross axle weight ratings (GAWRs) for the front and rear axles must not be exceeded.

For further information on GAWRs, vehicle loading, and trailer towing, refer to "Vehicle Loading" in the "Starting And Operating" section of this manual.

To determine the maximum loading conditions of your vehicle, locate the statement "The combined weight of occupants and cargo should never exceed XXX kg or XXX lbs" on the Tire and Loading Information placard. The combined weight of occupants, cargo/luggage and trailer tongue weight (if applicable) should never exceed the weight referenced here.

Steps For Determining Correct Load Limit—

(1) Locate the statement "The combined weight of occupants and cargo should never exceed XXX kg or XXX lbs." on your vehicle's placard.

(2) Determine the combined weight of the driver and passengers that will be riding in your vehicle.

(3) Subtract the combined weight of the driver and passengers from XXX kg or XXX lbs.

(4) The resulting figure equals the available amount of cargo and luggage load capacity. For example, if "XXX" amount equals 1400 lbs. and there will be five 150 lb passengers in your vehicle, the amount of available cargo and luggage load capacity is 650 lbs. (1400-750 (5x150) = 650 lbs.)

(5) Determine the combined weight of luggage and cargo being loaded on the vehicle. That weight may not safely exceed the available cargo and luggage load capacity calculated in Step 4.

(6) If your vehicle will be towing a trailer, load from your trailer will be transferred to your vehicle. Consult this manual to determine how this reduces the available cargo and luggage load capacity of your vehicle.

Metric Example For Load Limit

For example, if "XXX" amount equals 635 kg and there will be five 68 kg passengers in your vehicle, the amount of available cargo and luggage load capacity is 295 kg (635-340 (5x68) = 295 kg) as shown in step 4.

NOTE:

- If your vehicle will be towing a trailer, load from your trailer will be transferred to your vehicle. The following table shows examples on how to calculate total load, cargo/luggage, and towing capacities of your vehicle with varying seating configurations and number and size of occupants. This table is for illustration purposes only and may not be accurate for the seating and load carry capacity of your vehicle.
- For the following example, the combined weight of occupants and cargo should never exceed 865 lbs (392 kg).

Occupants			Combined weight of occupants and cargo from Tire Placard	MINUS	Combined Occupant's weight	=	AVAILABLE Cargo/Luggage and Trailer Tongue Weight
TOTAL	FRONT	REAR					
EXAMPLE 1							
5	2	3			Occupant 1: 200 lbs Occupant 2: 130 lbs Occupant 3: 160 lbs Occupant 4: 100 lbs Occupant 5: 80 lbs TOTAL WEIGHT: 670 lbs		
			865 lbs	minus	670 lbs	=	195 lbs
EXAMPLE 2							
3	2	1			Occupant 1: 210 lbs Occupant 2: 180 lbs Occupant 3: 150 lbs TOTAL WEIGHT: 540 lbs		
			865 lbs	minus	540 lbs	=	325 lbs
EXAMPLE 3							
2	2	0			Occupant 1: 200 lbs Occupant 2: 200 lbs TOTAL WEIGHT: 400 lbs		
			865 lbs	minus	400 lbs	=	465 lbs

EXAMPLE

811a4d11

WARNING!

Overloading of your tires is dangerous. Overloading can cause tire failure, affect vehicle handling, and increase your stopping distance. Use tires of the recommended load capacity for your vehicle. Never overload them.

Tires — General Information

Tire Pressure

Proper tire inflation pressure is essential to the safe and satisfactory operation of your vehicle. Four primary areas are affected by improper tire pressure:

- Safety and Vehicle Stability
- Economy
- Tread Wear
- Ride Comfort

Safety

WARNING!

- **Improperly inflated tires are dangerous and can cause collisions.**
- **Underinflation increases tire flexing and can result in overheating and tire failure.**
- **Overinflation reduces a tire's ability to cushion shock. Objects on the road and chuckholes can cause damage that result in tire failure.**

(Continued)

WARNING! *(Continued)*

- **Overinflated or underinflated tires can affect vehicle handling and can fail suddenly, resulting in loss of vehicle control.**
- **Unequal tire pressures can cause steering problems. You could lose control of your vehicle.**
- **Unequal tire pressures from one side of the vehicle to the other can cause the vehicle to drift to the right or left.**
- **Always drive with each tire inflated to the recommended cold tire inflation pressure.**

Both under-inflation and over-inflation affect the stability of the vehicle and can produce a feeling of sluggish response or over responsiveness in the steering.

NOTE:

- Unequal tire pressures from side to side may cause erratic and unpredictable steering response.
- Unequal tire pressure from side to side may cause the vehicle to drift left or right.

Fuel Economy

Underinflated tires will increase tire rolling resistance resulting in higher fuel consumption.

Tread Wear

Improper cold tire inflation pressures can cause abnormal wear patterns and reduced tread life, resulting in the need for earlier tire replacement.

Ride Comfort And Vehicle Stability

Proper tire inflation contributes to a comfortable ride. Over-inflation produces a jarring and uncomfortable ride.

Tire Inflation Pressures

The proper cold tire inflation pressure is listed on the driver's side B-Pillar or rear edge of the driver's side door.

At least once a month:

- Check and adjust tire pressure with a good quality pocket-type pressure gauge. Do not make a visual judgement when determining proper inflation. Tires may look properly inflated even when they are under-inflated.
- Inspect tires for signs of tire wear or visible damage.

CAUTION!

After inspecting or adjusting the tire pressure, always reinstall the valve stem cap. This will prevent moisture and dirt from entering the valve stem, which could damage the valve stem.

Inflation pressures specified on the placard are always "cold tire inflation pressure". Cold tire inflation pressure is defined as the tire pressure after the vehicle has not been driven for at least three hours, or driven less than 1 mile (1.6 km) after sitting for a minimum of three hours. The cold tire inflation pressure must not exceed the maximum inflation pressure molded into the tire sidewall.

Check tire pressures more often if subject to a wide range of outdoor temperatures, as tire pressures vary with temperature changes.

Tire pressures change by approximately 1 psi (7 kPa) per 12°F (7°C) of air temperature change. Keep this in mind when checking tire pressure inside a garage, especially in the Winter.

Example: If garage temperature = 68°F (20°C) and the outside temperature = 32°F (0°C) then the cold tire inflation

pressure should be increased by 3 psi (21 kPa), which equals 1 psi (7 kPa) for every 12°F (7°C) for this outside temperature condition.

Tire pressure may increase from 2 to 6 psi (13 to 40 kPa) during operation. DO NOT reduce this normal pressure build up or your tire pressure will be too low.

Tire Pressures For High Speed Operation

The manufacturer advocates driving at safe speeds and within posted speed limits. Where speed limits or conditions are such that the vehicle can be driven at high speeds, maintaining correct tire inflation pressure is very important. Increased tire pressure and reduced vehicle loading may be required for high-speed vehicle operation. Refer to an authorized tire dealer or original equipment vehicle dealer for recommended safe operating speeds, loading and cold tire inflation pressures.

WARNING!

High speed driving with your vehicle under maximum load is dangerous. The added strain on your tires could cause them to fail. You could have a serious collision. Do not drive a vehicle loaded to the maximum capacity at continuous speeds above 75 mph (120 km/h).

Radial Ply Tires

WARNING!

Combining radial ply tires with other types of tires on your vehicle will cause your vehicle to handle poorly. The instability could cause a collision. Always use radial ply tires in sets of four. Never combine them with other types of tires.

Tire Repair

If your tire becomes damaged, it may be repaired if it meets the following criteria:

- The tire has not been driven on when flat.
- The damage is only on the tread section of your tire (sidewall damage is not repairable).
- The puncture is no greater than a ¼ of an inch (6 mm).

Consult an authorized tire dealer for tire repairs and additional information.

Damaged Run Flat tires, or Run Flat tires that have experienced a loss of pressure should be replaced immediately with another Run Flat tire of identical size and service

description (Load Index and Speed Symbol). Replace the tire pressure sensor as well as it is not designed to be reused.

Run Flat Tires — If Equipped

Run Flat tires allow you the capability to drive 50 miles (80 km) at 50 mph (80 km/h) after a rapid loss of inflation pressure. This rapid loss of inflation is referred to as the Run Flat mode. A Run Flat mode occurs when the tire inflation pressure is of/or below 14 psi (96 kPa). Once a Run Flat tire reaches the run flat mode it has limited driving capabilities and needs to be replaced immediately. A Run Flat tire is not repairable. When a run flat tire is changed after driving with underinflated tire condition, please replace the TPM sensor as it is not designed to be reused when driven under run flat mode (14 psi (96 kPa)) condition.

NOTE: TPM Sensor must be replaced after driving the vehicle on a flat tire condition.

It is not recommended driving a vehicle loaded at full capacity or to tow a trailer while a tire is in the run flat mode.

See the tire pressure monitoring section for more information.

Tire Spinning

When stuck in mud, sand, snow, or ice conditions, do not spin your vehicle's wheels above 30 mph (48 km/h) or for longer than 30 seconds continuously without stopping.

Refer to "Freeing A Stuck Vehicle" in "In Case Of Emergency" for further information.

WARNING!

Fast spinning tires can be dangerous. Forces generated by excessive wheel speeds may cause tire damage or failure. A tire could explode and injure someone. Do not spin your vehicle's wheels faster than 30 mph (48 km/h) for more than 30 seconds continuously when you are stuck, and do not let anyone near a spinning wheel, no matter what the speed.

Tread Wear Indicators

Tread wear indicators are in the original equipment tires to help you in determining when your tires should be replaced.

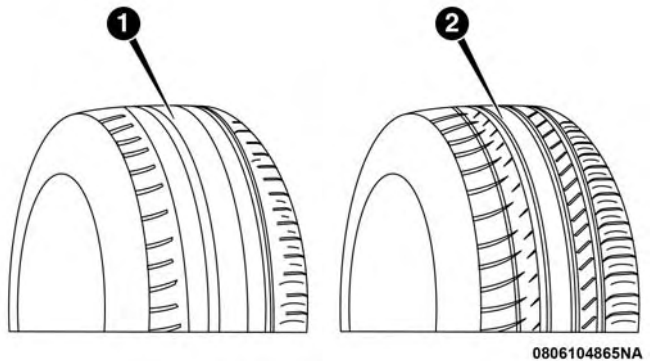

Tire Tread

1 — Worn Tire
2 — New Tire

These indicators are molded into the bottom of the tread grooves. They will appear as bands when the tread depth becomes a 1/16 of an inch (1.6 mm). When the tread is worn to the tread wear indicators, the tire should be replaced.

Refer to “Replacement Tires” in this section for further information.

Life Of Tire

The service life of a tire is dependent upon varying factors including, but not limited to:

- Driving style.
- Tire pressure - Improper cold tire inflation pressures can cause uneven wear patterns to develop across the tire tread. These abnormal wear patterns will reduce tread life, resulting in the need for earlier tire replacement.
- Distance driven.
- Performance tires, tires with a speed rating of V or higher, and Summer tires typically have a reduced tread life. Rotation of these tires per the vehicle scheduled maintenance is highly recommended.

WARNING!

Tires and the spare tire should be replaced after six years, regardless of the remaining tread. Failure to follow this warning can result in sudden tire failure. You could lose control and have a collision resulting in serious injury or death.

NOTE: Wheel Valve Stem must be replaced as well when installing new tires due to wear and tear in existing tires.

Keep dismounted tires in a cool, dry place with as little exposure to light as possible. Protect tires from contact with oil, grease, and gasoline.

Replacement Tires

The tires on your new vehicle provide a balance of many characteristics. They should be inspected regularly for wear and correct cold tire inflation pressures. The manufacturer strongly recommends that you use tires equivalent to the originals in size, quality and performance when replacement is needed. Refer to the paragraph on "Tread Wear Indicators" in this section. Refer to the Tire and Loading Information placard or the Vehicle Certification Label for the size designation of your tire. The Load Index and Speed Symbol for your tire will be found on the original equipment tire sidewall.

See the Tire Sizing Chart example found in the "Tire Safety Information" section of this manual for more information relating to the Load Index and Speed Symbol of a tire.

It is recommended to replace the two front tires or two rear tires as a pair. Replacing just one tire can seriously affect your vehicle's handling. If you ever replace a wheel, make sure that the wheel's specifications match those of the original wheels.

It is recommended you contact an authorized tire dealer or original equipment dealer with any questions you may have on tire specifications or capability. Failure to use equivalent replacement tires may adversely affect the safety, handling, and ride of your vehicle.

WARNING!

- **Do not use a tire, wheel size, load rating, or speed rating other than that specified for your vehicle. Some combinations of unapproved tires and wheels**

(Continued)

WARNING! *(Continued)*

may change suspension dimensions and performance characteristics, resulting in changes to steering, handling, and braking of your vehicle. This can cause unpredictable handling and stress to steering and suspension components. You could lose control and have a collision resulting in serious injury or death. Use only the tire and wheel sizes with load ratings approved for your vehicle.

- **Never use a tire with a smaller load index or capacity, other than what was originally equipped on your vehicle. Using a tire with a smaller load index could result in tire overloading and failure. You could lose control and have a collision.**
- **Failure to equip your vehicle with tires having adequate speed capability can result in sudden tire failure and loss of vehicle control.**

CAUTION!

Replacing original tires with tires of a different size may result in false speedometer and odometer readings.

Tire Types

All Season Tires — If Equipped

All Season tires provide traction for all seasons (Spring, Summer, Fall, and Winter). Traction levels may vary between different all season tires. All season tires can be identified by the M+S, M&S, M/S or MS designation on the tire sidewall. Use all season tires only in sets of four; failure to do so may adversely affect the safety and handling of your vehicle.

Summer Or Three Season Tires — If Equipped

Summer tires provide traction in both wet and dry conditions, and are not intended to be driven in snow or on ice. If your vehicle is equipped with Summer tires, be aware these tires are not designed for Winter or cold driving conditions. Install Winter tires on your vehicle when ambient temperatures are less than 40°F (5°C) or if roads are covered with ice or snow. For more information, contact an authorized dealer.

Summer tires do not contain the all season designation or mountain/snowflake symbol on the tire sidewall. Use Summer tires only in sets of four; failure to do so may adversely affect the safety and handling of your vehicle.

WARNING!

Do not use Summer tires in snow/ice conditions. You could lose vehicle control, resulting in severe injury or death. Driving too fast for conditions also creates the possibility of loss of vehicle control.

Snow Tires

Some areas of the country require the use of snow tires during the Winter. Snow tires can be identified by a "mountain/snowflake" symbol on the tire sidewall.

If you need snow tires, select tires equivalent in size and type to the original equipment tires. Use snow tires only in sets of four; failure to do so may adversely affect the safety and handling of your vehicle.

Snow tires generally have lower speed ratings than what was originally equipped with your vehicle and should not be operated at sustained speeds over 75 mph (120 km/h). For speeds above 75 mph (120 km/h) refer to original equipment or an authorized tire dealer for recommended safe operating speeds, loading and cold tire inflation pressures.

While studded tires improve performance on ice, skid and traction capability on wet or dry surfaces may be poorer than that of non-studded tires. Some states prohibit studded tires; therefore, local laws should be checked before using these tire types.

Spare Tires — If Equipped

NOTE: For vehicles equipped with Tire Service Kit instead of a spare tire, please refer to "Tire Service Kit" in "In Case Of Emergency" for further information.

CAUTION!

Because of the reduced ground clearance, do not take your vehicle through an automatic car wash with a compact or limited use temporary spare installed. Damage to the vehicle may result.

Refer to the "Towing Requirements - Tires" in "Starting And Operating" for restrictions when towing with a spare tire designated for temporary emergency use.

Spare Tire Matching Original Equipped Tire And Wheel — If Equipped

Your vehicle may be equipped with a spare tire and wheel equivalent in look and function to the original equipment

tire and wheel found on the front or rear axle of your vehicle. This spare tire may be used in the tire rotation for your vehicle. If your vehicle has this option, refer to an authorized tire dealer for the recommended tire rotation pattern.

Compact Spare Tire — If Equipped

The compact spare is for temporary emergency use only. You can identify if your vehicle is equipped with a compact spare by looking at the spare tire description on the Tire and Loading Information Placard located on the driver's side door opening or on the sidewall of the tire. Compact spare tire descriptions begin with the letter "T" or "S" preceding the size designation. Example: T145/80D18 103M.

T, S = Temporary Spare Tire

Since this tire has limited tread life, the original equipment tire should be repaired (or replaced) and reinstalled on your vehicle at the first opportunity.

Do not install a wheel cover or attempt to mount a conventional tire on the compact spare wheel, since the wheel is designed specifically for the compact spare tire. Do not install more than one compact spare tire and wheel on the vehicle at any given time.

WARNING!

Compact and collapsible spares are for temporary emergency use only. With these spares, do not drive more than 50 mph (80 km/h). Temporary use spares have limited tread life. When the tread is worn to the tread wear indicators, the temporary use spare tire needs to be replaced. Be sure to follow the warnings, which apply to your spare. Failure to do so could result in spare tire failure and loss of vehicle control.

Collapsible Spare Tire — If Equipped

The collapsible spare is for temporary emergency use only. You can identify if your vehicle is equipped with a collapsible spare by looking at the spare tire description on the Tire and Loading Information Placard located on the driver's side door opening or on the sidewall of the tire.

Collapsible spare tire description example: 165/80-17 101P.

Since this tire has limited tread life, the original equipment tire should be repaired (or replaced) and reinstalled on your vehicle at the first opportunity.

Inflate collapsible tire only after the wheel is properly installed to the vehicle. Inflate the collapsible tire using the electric air pump before lowering the vehicle.

Do not install a wheel cover or attempt to mount a conventional tire on the collapsible spare wheel, since the wheel is designed specifically for the collapsible spare tire.

WARNING!

Compact and Collapsible spares are for temporary emergency use only. With these spares, do not drive more than 50 mph (80 km/h). Temporary use spares have limited tread life. When the tread is worn to the tread wear indicators, the temporary use spare tire needs to be replaced. Be sure to follow the warnings, which apply to your spare. Failure to do so could result in spare tire failure and loss of vehicle control.

Full Size Spare — If Equipped

The full size spare is for temporary emergency use only. This tire may look like the originally equipped tire on the front or rear axle of your vehicle, but it is not. This spare tire may have limited tread life. When the tread is worn to the tread wear indicators, the temporary use full size spare tire needs to be replaced. Since it is not the same as your original equipment tire, replace (or repair) the original equipment tire and reinstall on the vehicle at the first opportunity.

Limited Use Spare — If Equipped

The limited use spare tire is for temporary emergency use only. This tire is identified by a label located on the limited use spare wheel. This label contains the driving limitations for this spare. This tire may look like the original equipped tire on the front or rear axle of your vehicle, but it is not. Installation of this limited use spare tire affects vehicle handling. Since it is not the same as your original equipment tire, replace (or repair) the original equipment tire and reinstall on the vehicle at the first opportunity.

WARNING!

Limited use spares are for emergency use only. Installation of this limited use spare tire affects vehicle handling. With this tire, do not drive more than the speed listed on the limited use spare wheel. Keep inflated to the cold tire inflation pressures listed on your Tire and Loading Information Placard located on the driver's side B-Pillar or the rear edge of the driver's

(Continued)

WARNING! *(Continued)*

side door. Replace (or repair) the original equipment tire at the first opportunity and reinstall it on your vehicle. Failure to do so could result in loss of vehicle control.

Wheel And Wheel Trim Care

All wheels and wheel trim, especially aluminum and chrome plated wheels, should be cleaned regularly using mild (neutral Ph) soap and water to maintain their luster and to prevent corrosion. Wash wheels with the same soap solution recommended for the body of the vehicle and remember to always wash when the surfaces are not hot to the touch.

Your wheels are susceptible to deterioration caused by salt, sodium chloride, magnesium chloride, calcium chloride, etc., and other road chemicals used to melt ice or control dust on dirt roads. Use a soft cloth or sponge and mild soap to wipe away promptly. Do not use harsh chemicals or a stiff brush. They can damage the wheel's protective coating that helps keep them from corroding and tarnishing.

CAUTION!

Avoid products or automatic car washes that use acidic solutions or strong alkaline additives or harsh brushes. Many aftermarket wheel cleaners and automatic car washes may damage the wheel's protective finish. Such damage is not covered by the New Vehicle Limited Warranty. Only car wash soap, Mopar Wheel Cleaner or equivalent is recommended.

When cleaning extremely dirty wheels including excessive brake dust, care must be taken in the selection of tire and wheel cleaning chemicals and equipment to prevent damage to the wheels. Mopar Wheel Treatment or Mopar Chrome Cleaner or their equivalent is recommended or select a non-abrasive, non-acidic cleaner for aluminum or chrome wheels.

CAUTION!

Do not use scouring pads, steel wool, a bristle brush, metal polishes or oven cleaner. These products may damage the wheel's protective finish. Such damage is not covered by the New Vehicle Limited Warranty.

(Continued)

CAUTION! *(Continued)*

Only car wash soap, Mopar Wheel Cleaner or equivalent is recommended.

NOTE: If you intend parking or storing your vehicle for an extended period after cleaning the wheels with wheel cleaner, drive your vehicle and apply the brakes to remove the water droplets from the brake components. This activity will remove the red rust on the brake rotors and prevent vehicle vibration when braking.

Dark Vapor Chrome, Black Satin Chrome, or Low Gloss Clear Coat Wheels

CAUTION!

If your vehicle is equipped with these specialty wheels, DO NOT USE wheel cleaners, abrasives, or polishing compounds. They will permanently damage this finish and such damage is not covered by the New Vehicle Limited Warranty. HAND WASH ONLY USING MILD SOAP AND WATER WITH A SOFT CLOTH. Used on a regular basis; this is all that is required to maintain this finish.

Tire Chains (Traction Devices)

Use of traction devices require sufficient tire-to-body clearance. Follow these recommendations to guard against damage:

- Traction device must be of proper size for the tire, as recommended by the traction device manufacturer.
- Install on front tires only.
- For a 235/65R17 or 235/60R18 tire, use of a snow traction device with a maximum projection of 9 mm beyond the tire profile is recommended.

WARNING!

Using tires of different size and type (M+S, Snow) between front and rear axles can cause unpredictable handling. You could lose control and have a collision.

CAUTION!

To avoid damage to your vehicle or tires, observe the following precautions:

- **Because of restricted traction device clearance between tires and other suspension components, it is**

(Continued)

CAUTION! *(Continued)*

important that only traction devices in good condition are used. Broken devices can cause serious damage. Stop the vehicle immediately if noise occurs that could indicate device breakage. Remove the damaged parts of the device before further use.

- **Install device as tightly as possible and then retighten after driving about ½ mile (0.8 km).**
- **Do not exceed 30 mph (48 km/h).**
- **Drive cautiously and avoid severe turns and large bumps, especially with a loaded vehicle.**
- **Do not drive for a prolonged period on dry pavement.**
- **Observe the traction device manufacturer's instructions on the method of installation, operating speed, and conditions for use. Always use the suggested operating speed of the device manufacturer's if it is less than 30 mph (48 km/h).**
- **Do not use traction devices on a compact spare tire.**

Tire Rotation Recommendations

The tires on the front and rear of your vehicle operate at different loads and perform different steering, driving, and braking functions. For these reasons, they wear at unequal rates.

These effects can be reduced by timely rotation of tires. The benefits of rotation are especially worthwhile with aggressive tread designs such as those on all season type tires. Rotation will increase tread life, help to maintain mud, snow and wet traction levels, and contribute to a smooth, quiet ride.

Refer to the "Scheduled Servicing" for the proper maintenance intervals. The reasons for any rapid or unusual wear should be corrected prior to rotation being performed.

The suggested rotation method is the "forward cross" shown in the following diagram. This rotation pattern does not apply to some directional tires that must not be reversed.

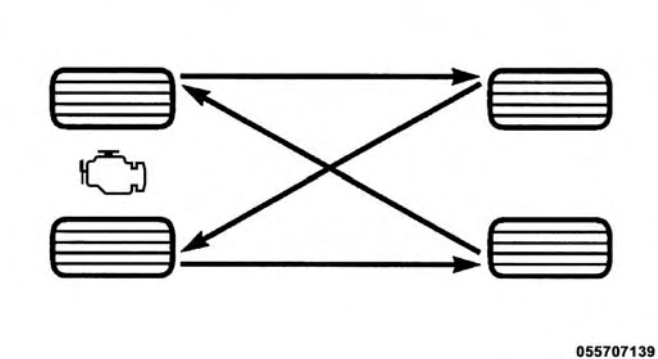

Tire Rotation

DEPARTMENT OF TRANSPORTATION UNIFORM TIRE QUALITY GRADES

The following tire grading categories were established by the National Highway Traffic Safety Administration. The specific grade rating assigned by the tire's manufacturer in each category is shown on the sidewall of the tires on your vehicle.

All passenger vehicle tires must conform to Federal safety requirements in addition to these grades.

Treadwear

The Treadwear grade is a comparative rating, based on the wear rate of the tire when tested under controlled conditions on a specified government test course. For example, a tire graded 150 would wear one and one-half times as well on the government course as a tire graded 100. The relative performance of tires depends upon the actual conditions of their use, however, and may depart significantly from the norm due to variations in driving habits, service practices, and differences in road characteristics and climate.

Traction Grades

The Traction grades, from highest to lowest, are AA, A, B, and C. These grades represent the tire's ability to stop on wet pavement, as measured under controlled conditions on specified government test surfaces of asphalt and concrete. A tire marked C may have poor traction performance.

WARNING!

The traction grade assigned to this tire is based on straight-ahead braking traction tests, and does not

(Continued)

WARNING! *(Continued)*

include acceleration, cornering, hydroplaning, or peak traction characteristics.

Temperature Grades

The Temperature grades are A (the highest), B, and C, representing the tire's resistance to the generation of heat and its ability to dissipate heat, when tested under controlled conditions on a specified indoor laboratory test wheel.

Sustained high temperature can cause the material of the tire to degenerate and reduce tire life, and excessive temperature can lead to sudden tire failure. The grade C corresponds to a level of performance, which all passenger vehicle tires must meet under the Federal Motor Vehicle Safety Standard No. 109. Grades B and A represent higher levels of performance on the laboratory test wheel, than the minimum required by law.

WARNING!

The temperature grade for this tire is established for a tire that is properly inflated and not overloaded.

(Continued)

WARNING! *(Continued)*

Excessive speed, under-inflation, or excessive loading, either separately or in combination, can cause heat buildup and possible tire failure.

STORING THE VEHICLE

If the vehicle should remain stationary for more than a month, observe the following precautions:

- Park your vehicle in a covered, dry and possibly airy location the windows open slightly.
- Check that the Electric Park Brake is not engaged.
- Disconnect the negative (-) terminal from the battery post and be sure that the battery is fully charged. During storage check battery charge quarterly.
- If you do not disconnect the battery from the electrical system, check the battery charge every 30 days.
- Clean and protect the painted parts by applying protective waxes.
- Clean and protect polished metal parts by applying protective waxes.

- Apply talcum powder to the front and rear wiper blades and leave raised from the glass.
- Cover the vehicle with an appropriate cover taking care not to damage the painted surface by dragging across dirty surfaces. Do not use plastic sheeting which will not allow the evaporation of moisture present on the surface of the vehicle.
- Inflate the tires at a pressure of +7.25 psi (+0.5 bar) higher than recommended on the tire placard and check it periodically.
- Do not drain the vehicle's cooling system.
- Whenever you leave the vehicle stationary for two weeks or more, idle the vehicle for approximately five minutes, with the air conditioning system on and high fan speed. This will ensure proper lubrication of the system, thus minimizing the possibility of damage to the compressor when the vehicle is put back into operation.

CAUTION!

Before removal of the positive and negative terminals to the battery, wait at least a minute with ignition

(Continued)

CAUTION! *(Continued)*

switch in the OFF position and close the drivers door. When reconnecting the positive and negative terminals to the battery be sure the ignition switch is in the OFF position and the drivers door is closed.

BODYWORK

Protection From Atmospheric Agents

Vehicle body care requirements vary according to geographic locations and usage. Chemicals that make roads passable in snow and ice and those that are sprayed on trees and road surfaces during other seasons are highly corrosive to the metal in your vehicle. Outside parking, which exposes your vehicle to airborne contaminants, road surfaces on which the vehicle is operated, extreme hot or cold weather and other extreme conditions will have an adverse effect on paint, metal trim, and underbody protection.

The following maintenance recommendations will enable you to obtain maximum benefit from the corrosion resistance built into your vehicle.

What Causes Corrosion?

Corrosion is the result of deterioration or removal of paint and protective coatings from your vehicle.

The most common causes are:

- Road salt, dirt and moisture accumulation.
- Stone and gravel impact.
- Insects, tree sap and tar.
- Salt in the air near seacoast localities.
- Atmospheric fallout/industrial pollutants.

Body And Underbody Maintenance

Cleaning Headlights

Your vehicle is equipped with plastic headlights and fog lights that are lighter and less susceptible to stone breakage than glass headlights.

Plastic is not as scratch resistant as glass and therefore different lens cleaning procedures must be followed.

To minimize the possibility of scratching the lenses and reducing light output, avoid wiping with a dry cloth. To remove road dirt, wash with a mild soap solution followed by rinsing.

Do not use abrasive cleaning components, solvents, steel wool or other aggressive material to clean the lenses.

Preserving The Bodywork

Washing

- Wash your vehicle regularly. Always wash your vehicle in the shade using Mopar Car Wash, or a mild car wash soap, and rinse the panels completely with clear water.
- If insects, tar, or other similar deposits have accumulated on your vehicle, use Mopar Super Kleen Bug and Tar Remover to remove.
- Use a high quality cleaner wax, such as Mopar Cleaner Wax to remove road film, stains and to protect your paint finish. Take care never to scratch the paint.
- Avoid using abrasive compounds and power buffing that may diminish the gloss or thin out the paint finish.

CAUTION!

- **Do not use abrasive or strong cleaning materials such as steel wool or scouring powder that will scratch metal and painted surfaces.**
- **Use of power washers exceeding 1,200 psi (8,274 kPa) can result in damage or removal of paint and decals.**

Special Care

- If you drive on salted or dusty roads or if you drive near the ocean, hose off the undercarriage at least once a month.
- It is important that the drain holes in the lower edges of the doors, rocker panels, and trunk be kept clear and open.
- If you detect any stone chips or scratches in the paint, touch them up immediately. The cost of such repairs is considered the responsibility of the owner.
- If your vehicle is damaged due to a collision or similar cause that destroys the paint and protective coating, have your vehicle repaired as soon as possible. The cost of such repairs is considered the responsibility of the owner.
- If you carry special cargo such as chemicals, fertilizers, de-icer salt, etc., be sure that such materials are well packaged and sealed.
- If a lot of driving is done on gravel roads, consider mud or stone shields behind each wheel.
- Use Mopar Touch Up Paint on scratches as soon as possible. An authorized dealer has touch up paint to match the color of your vehicle.

INTERIORS

Seats And Fabric Parts

Use Mopar Total Clean to clean fabric upholstery and carpeting.

WARNING!

Do not use volatile solvents for cleaning purposes. Many are potentially flammable, and if used in closed areas they may cause respiratory harm.

Seat Belt Maintenance

Do not bleach, dye or clean the belts with chemical solvents or abrasive cleaners. This will weaken the fabric. Sun damage can also weaken the fabric.

If the belts need cleaning, use a mild soap solution or lukewarm water. Do not remove the belts from the vehicle to wash them. Dry with a soft cloth.

Replace the belts if they appear frayed or worn or if the buckles do not work properly.

WARNING!

A frayed or torn belt could rip apart in a collision and leave you with no protection. Inspect the belt system periodically, checking for cuts, frays, or loose parts. Damaged parts must be replaced immediately. Do not disassemble or modify the system. Seat belt assemblies must be replaced after a collision if they have been damaged (i.e., bent retractor, torn webbing, etc.).

Plastic And Coated Parts

Use Mopar Total Clean to clean vinyl upholstery.

CAUTION!

- **Direct contact of air fresheners, insect repellents, suntan lotions, or hand sanitizers to the plastic,**

(Continued)

CAUTION! *(Continued)*

painted, or decorated surfaces of the interior may cause permanent damage. Wipe away immediately.
- **Damage caused by these type of products may not be covered by your New Vehicle Limited Warranty.**

Cleaning Plastic Instrument Cluster Lenses

The lenses in front of the instruments in this vehicle are molded in clear plastic. When cleaning the lenses, care must be taken to avoid scratching the plastic.

1. Clean with a wet soft cloth. A mild soap solution may be used, but do not use high alcohol content or abrasive cleaners. If soap is used, wipe clean with a clean damp cloth.
2. Dry with a soft cloth.

Leather Parts

Mopar Total Clean is specifically recommended for leather upholstery.

Your leather upholstery can be best preserved by regular cleaning with a damp soft cloth. Small particles of dirt can act as an abrasive and damage the leather upholstery and should be removed promptly with a damp cloth. Stubborn

soils can be removed easily with a soft cloth and Mopar Total Clean. Care should be taken to avoid soaking your leather upholstery with any liquid. Please do not use polishes, oils, cleaning fluids, solvents, detergents, or ammonia-based cleaners to clean your leather upholstery. Application of a leather conditioner is not required to maintain the original condition.

NOTE: If equipped with light colored leather, it tends to show any foreign material, dirt, and fabric dye transfer more so than darker colors. The leather is designed for easy cleaning, and FCA recommends Mopar total care leather cleaner applied on a cloth to clean the leather seats as needed.

CAUTION!

Do not use Alcohol and Alcohol-based and/or Ketone based cleaning products to clean leather seats, as damage to the seat may result.

Glass Surfaces

All glass surfaces should be cleaned on a regular basis with Mopar Glass Cleaner, or any commercial household-type glass cleaner. Never use an abrasive type cleaner. Use caution when cleaning the inside rear window equipped with electric defrosters or windows equipped with radio antennas. Do not use scrapers or other sharp instruments that may scratch the elements.

When cleaning the rear view mirror, spray cleaner on the towel or cloth that you are using. Do not spray cleaner directly on the mirror.

TECHNICAL SPECIFICATIONS

CONTENTS

■ IDENTIFICATION DATA 570
- □ Vehicle Identification Number 570

■ BRAKE SYSTEM 570

■ WHEEL AND TIRE TORQUE SPECIFICATIONS . .571
- □ Torque Specifications 571

■ FUEL REQUIREMENTS 572
- □ 3.6L Engine 572
- □ Reformulated Gasoline 573
- □ Materials Added To Fuel 573
- □ Gasoline/Oxygenate Blends 574
- □ Do Not Use E-85 In Non-Flex Fuel Vehicles 574
- □ CNG And LP Fuel System Modifications 574
- □ MMT In Gasoline 575
- □ Fuel System Cautions 575
- □ Carbon Monoxide Warnings 576

■ FLUID CAPACITIES 576

■ FLUIDS AND LUBRICANTS 577
- □ Engine 577
- □ Chassis 579

IDENTIFICATION DATA

Vehicle Identification Number

The Vehicle Identification Number (VIN) is on the left front corner of the instrument panel and is visible from outside of the vehicle through the windshield. This number also appears stamped under the right rear sliding door trim panel and printed on the Automobile Information Disclosure Label affixed to a window on your vehicle, the vehicle registration and title.

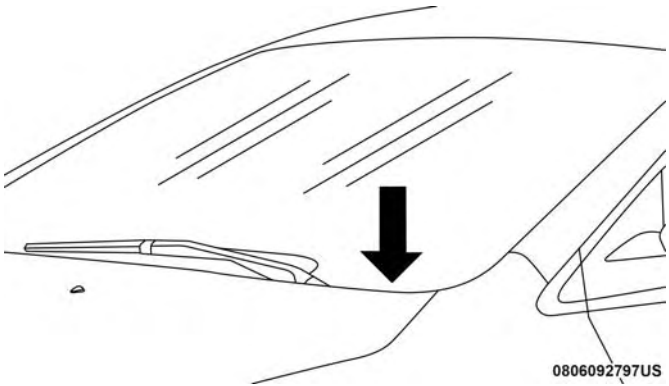

Vehicle Identification Number

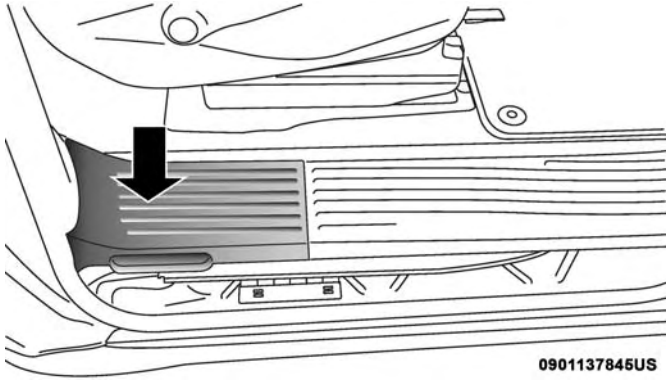

Vehicle Identification Number

NOTE: It is illegal to remove or alter the VIN.

BRAKE SYSTEM

Your vehicle is equipped with dual hydraulic brake systems. If either of the two hydraulic systems loses normal capability, the remaining system will still function. However, there will be some loss of overall braking effectiveness. You may notice increased pedal travel during application, greater pedal force required to slow or stop, and potential activation of the Brake Warning Light.

In the event power assist is lost for any reason (i.e., repeated brake applications with the engine off) the brakes will still function. However, the effort required to brake the vehicle will be much greater than that required with the power system operating.

WHEEL AND TIRE TORQUE SPECIFICATIONS

Proper lug nut/bolt torque is very important to ensure that the wheel is properly mounted to the vehicle. Any time a wheel has been removed and reinstalled on the vehicle, the lug nuts/bolts should be torqued using a properly calibrated torque wrench using a high quality six sided (hex) deep wall socket.

Torque Specifications

Lug Nut/Bolt Torque	**Lug Nut/Bolt Size	Lug Nut/Bolt Socket Size
100 Ft-Lbs (135 N·m)	M12 x 1.5	19 mm

**Use only your authorized dealer recommended lug nuts/bolts and clean or remove any dirt or oil before tightening.

Inspect the wheel mounting surface prior to mounting the tire and remove any corrosion or loose particles.

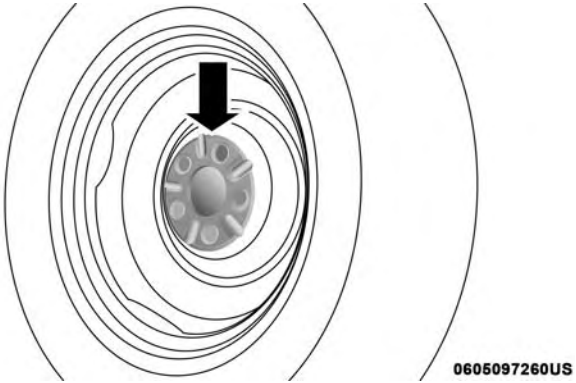

Wheel Mounting Surface

Tighten the lug nuts/bolts in a star pattern until each nut/bolt has been tightened twice. Ensure that the socket is fully engaged on the lug nut/bolt (do not insert it halfway).

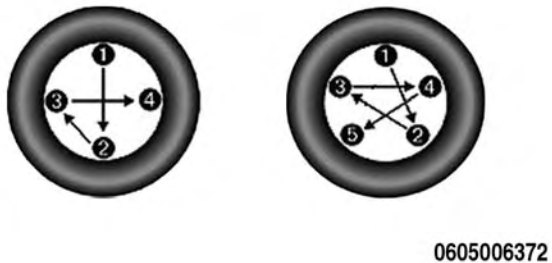

Torque Patterns

After 25 miles (40 km) check the lug nut/bolt torque to be sure that all the lug nuts/bolts are properly seated against the wheel.

WARNING!

To avoid the risk of forcing the vehicle off the jack, do not tighten the lug nuts/bolts fully until the vehicle has been lowered. Failure to follow this warning may result in personal injury.

FUEL REQUIREMENTS

3.6L Engine

Do not use E-85 flex fuel or ethanol blends greater than 15% in this engine.

These engines are designed to meet all emissions regulations and provide optimum fuel economy and performance when using high quality unleaded "Regular" gasoline having a posted octane number of 87 as specified by the (R+M)/2 method. The use of higher octane "Premium" gasoline is not required, as it will not provide any benefit over "Regular" gasoline in these engines.

While operating on gasoline with an octane number of 87, hearing a light knocking sound from the engine is not a cause for concern. However, if the engine is heard making a heavy knocking sound, see your dealer immediately. Use of gasoline with an octane number lower than 87 can cause engine failure and may void or not be covered by the New Vehicle Limited Warranty.

Poor quality gasoline can cause problems such as hard starting, stalling, and hesitations. If you experience these symptoms, try another brand of gasoline before considering service for the vehicle.

Reformulated Gasoline

Many areas of the country require the use of cleaner burning gasoline referred to as "Reformulated Gasoline". Reformulated gasoline contains oxygenates and are specifically blended to reduce vehicle emissions and improve air quality.

The use of reformulated gasoline is recommended. Properly blended reformulated gasoline will provide improved performance and durability of engine and fuel system components.

Materials Added To Fuel

Besides using unleaded gasoline with the proper octane rating, gasolines that contain detergents, corrosion and stability additives are recommended. Using gasolines that have these additives will help improve fuel economy, reduce emissions, and maintain vehicle performance.

Designated TOP TIER Detergent Gasoline contains a higher level of detergents to further aide in minimizing engine and fuel system deposits. When available, the usage of TOP TIER Detergent gasoline is recommended. Visit www.toptiergas.com for a list of TOP TIER Detergent Gasoline Retailers.

Indiscriminate use of fuel system cleaning agents should be avoided. Many of these materials intended for gum and varnish removal may contain active solvents or similar ingredients. These can harm fuel system gasket and diaphragm materials.

Gasoline/Oxygenate Blends

Some fuel suppliers blend unleaded gasoline with oxygenates such as ethanol.

CAUTION!

DO NOT use E-85, gasoline containing methanol, or gasoline containing more than 15% ethanol (E-15). Use of these blends may result in starting and drivability problems, damage critical fuel system components, cause emissions to exceed the applicable standard, and/or cause the Malfunction Indicator Light to illuminate. Please observe pump labels as they should clearly communicate if a fuel contains greater than 15% ethanol (E-15).

Problems that result from using gasoline containing more than 15% ethanol (E-15) or gasoline containing methanol are not the responsibility of the manufacturer and may void or not be covered under New Vehicle Limited Warranty.

Do Not Use E-85 In Non-Flex Fuel Vehicles

Non-Flex Fuel Vehicles (FFV) are compatible with gasoline containing up to 15% ethanol (E-15). Use of gasoline with higher ethanol content may void the New Vehicle Limited Warranty.

If a Non-FFV vehicle is inadvertently fueled with E-85 fuel, the engine will have some or all of these symptoms:

- Operate in a lean mode.
- OBD II Malfunction Indicator Light on.
- Poor engine performance.
- Poor cold start and cold drivability.
- Increased risk for fuel system component corrosion.

CNG And LP Fuel System Modifications

Modifications that allow the engine to run on Compressed Natural Gas (CNG) or Liquid Propane (LP) may result in damage to the engine, emissions, and fuel system components. Problems that result from running CNG or LP are not the responsibility of the manufacturer and may void or not be covered under the New Vehicle Limited Warranty.

MMT In Gasoline

Methylcyclopentadienyl Manganese Tricarbonyl (MMT) is a manganese-containing metallic additive that is blended into some gasoline to increase octane. Gasoline blended with MMT provides no performance advantage beyond gasoline of the same octane number without MMT. Gasoline blended with MMT reduces spark plug life and reduces emissions system performance in some vehicles. The manufacturer recommends that gasoline without MMT be used in your vehicle. The MMT content of gasoline may not be indicated on the gasoline pump; therefore, you should ask your gasoline retailer whether the gasoline contains MMT. MMT is prohibited in Federal and California reformulated gasoline.

Fuel System Cautions

CAUTION!

Follow these guidelines to maintain your vehicle's performance:

- **The use of leaded gasoline is prohibited by Federal law. Using leaded gasoline can impair engine performance and damage the emissions control system.**

(Continued)

CAUTION! ***(Continued)***

- **An out-of-tune engine or certain fuel or ignition malfunctions can cause the catalytic converter to overheat. If you notice a pungent burning odor or some light smoke, your engine may be out of tune or malfunctioning and may require immediate service. Contact an authorized dealer for service assistance.**
- **The use of fuel additives, which are now being sold as octane enhancers, is not recommended. Most of these products contain high concentrations of methanol. Fuel system damage or vehicle performance problems resulting from the use of such fuels or additives is not the responsibility of the manufacturer and may void or not be covered under the New Vehicle Limited Warranty.**

NOTE: Intentional tampering with the emissions control system can result in civil penalties being assessed against you.

Carbon Monoxide Warnings

WARNING!

Carbon monoxide (CO) in exhaust gases is deadly. Follow the precautions below to prevent carbon monoxide poisoning:

- **Do not inhale exhaust gases. They contain carbon monoxide, a colorless and odorless gas, which can kill. Never run the engine in a closed area, such as a garage, and never sit in a parked vehicle with the**

(Continued)

WARNING! ***(Continued)***

engine running for an extended period. If the vehicle is stopped in an open area with the engine running for more than a short period, adjust the ventilation system to force fresh, outside air into the vehicle.

- **Guard against carbon monoxide with proper maintenance. Have the exhaust system inspected every time the vehicle is raised. Have any abnormal conditions repaired promptly. Until repaired, drive with all side windows fully open.**

FLUID CAPACITIES

	U.S.	Metric
Fuel (Approximate)		
3.6L Engines	19 Gallons	71 Liters
Engine Oil With Filter		
3.6 Liter Engine (SAE 0W-20 , API Certified)	5 quarts	4.7 liters

	U.S.	Metric
Cooling System*		
3.6 Liter Engine (Mopar Antifreeze/ Engine Coolant 10 Year/150,000 Mile (240,000 km) Formula)	13.1 Quarts — Standard Duty Cooling 13.4 Quarts — Heavy Duty Cooling	12.4 Liters — Standard Duty Cooling 12.7 Liters — Heavy Duty Cooling
* Includes heater and coolant reservoir filled to MAX level.		

FLUIDS AND LUBRICANTS

Engine

Component	Fluid, Lubricant, or Genuine Part
Engine Coolant	We recommend you use Mopar Antifreeze/Coolant 10 Year/150,000 Mile (240,000 km) Formula OAT (Organic Additive Technology) or equivalent meeting the requirements of FCA Material Standard MS.90032.
Engine Oil – 3.6L Engine	We recommend you use API Certified SAE 0W-20 Engine Oil, meeting the requirements of FCA Material Standard MS-6395 such as Mopar, Pennzoil, and Shell Helix. Refer to your engine oil filler cap for correct SAE grade.
Engine Oil Filter	We recommend you use a Mopar Engine Oil Filter.

Component	Fluid, Lubricant, or Genuine Part
Spark Plugs	We recommend you use Mopar Spark Plugs.
Fuel Selection – 3.6L Engine	87 Octane, 0-15% Ethanol (Do not use E-85).

CAUTION!

- **Mixing of engine coolant (antifreeze) other than specified Organic Additive Technology (OAT) engine coolant (antifreeze), may result in engine damage and may decrease corrosion protection. Organic Additive Technology (OAT) engine coolant is different and should not be mixed with Hybrid Organic Additive Technology (HOAT) engine coolant (antifreeze) or any "globally compatible" coolant (antifreeze). If a non-OAT engine coolant (antifreeze) is introduced into the cooling system in an emergency, the cooling system will need to be drained, flushed, and refilled with fresh OAT coolant (conforming to MS.90032), by an authorized dealer as soon as possible.**

(Continued)

CAUTION! ***(Continued)***

- **Do not use water alone or alcohol-based engine coolant (antifreeze) products. Do not use additional rust inhibitors or antirust products, as they may not be compatible with the radiator engine coolant and may plug the radiator.**
- **This vehicle has not been designed for use with propylene glycol-based engine coolant (antifreeze). Use of propylene glycol-based engine coolant (antifreeze) is not recommended.**

Chassis

Component	Fluid, Lubricant, or Genuine Part
Automatic Transmission	Use only Mopar ZF 8&9 Speed ATF Automatic Transmission Fluid, or equivalent. Failure to use the correct fluid may affect the function or performance of your transmission.
Brake Master Cylinder	We recommend you use Mopar DOT 3 Brake Fluid, SAE J1703 should be used. If DOT 3, SAE J1703 brake fluid is not available, then DOT 4 is acceptable. Use only recommended brake fluids.
Refrigerant	Use only refrigerant R-1234yf Charge Amounts: Single A/C System — 1.94 lb (880g) Dual A/C System — 2.31 lb (1050g)
Compressor Oil	Use only PAG oil PSD-1: Single A/C System — 140 ml Dual A/C System — 190 ml

MULTIMEDIA

CONTENTS

- UCONNECT SYSTEMS 584
- DRAG & DROP MENU BAR 584
- CYBERSECURITY 585
- UCONNECT SETTINGS 586
  - Customer Programmable Features — Uconnect 4 Settings 587
  - Customer Programmable Features — Uconnect 4C/4C NAV Settings 613
- STEERING WHEEL AUDIO CONTROLS 639
  - Radio Operation. 639
  - Media Mode 639
- AUX/USB/MP3 CONTROL 640
- UCONNECT THEATER — IF EQUIPPED 641
  - Uconnect Theater Overview 641
  - Getting Started 642
  - Accessing The System From The Uconnect System 642
  - Uconnect Theater Controls 643
  - Accessing The System From The Uconnect Theater Rear Screens 644
  - Pairing The Remote 645
  - Unpairing The Remote 646
  - Media Sources 647
  - Uconnect Theater Remote Control 648
  - Uconnect Theater Home Screen And Controls. . .649
  - General Information 651
  - Play A DVD/Blu-ray Or USB Media File From Uconnect System 651
  - Disc Menu. 654
  - Blu-ray Controls – Disc Specific Functions 654

- Uconnect Theater Apps 655
- Using The Rear Video USB Port 657
- Play Video Games 658
- Headphones Operation 658
- Display Settings 661
- Listening To Audio With The Screen Closed 661
- Rear Climate Controls 662
- Accessibility — If Equipped 664
- Wireless Streaming — If Equipped 664
- BD And DVD Region Codes 667
- Product Agreement 669
- General Information 672
- FCC/IC Regulatory Notices 672

■ RADIO OPERATION AND MOBILE PHONES . . .673

- Regulatory And Safety Information 673

■ UCONNECT VOICE RECOGNITION QUICK TIPS 675

- Introducing Uconnect 675
- Get Started 676
- Basic Voice Commands 677
- Radio 677
- Media 678
- Phone 679
- Voice Text Reply 680
- Climate 682
- Navigation (4C NAV) 683
- SiriusXM Guardian (4C/4C NAV) — If Equipped 684
- Register (4C/4C NAV) 684
- Vehicle Health Report/Alert (4C/4C NAV) 685
- Mobile App (4C/4C NAV) 685

- SiriusXM Travel Link (4C NAV) 686
- Siri Eyes Free — If Equipped 686
- Using Do Not Disturb 687
- Android Auto — If Equipped 688
- Apple CarPlay — If Equipped 690
- General Information 691
- Additional Information 692

■ CD/DVD DISC MAINTENANCE 692

UCONNECT SYSTEMS

For detailed information about your Uconnect system, refer to your Uconnect Owner's Manual Supplement.

NOTE: Uconnect screen images are for illustration purposes only and may not reflect exact software for your vehicle.

DRAG & DROP MENU BAR

The Uconnect features and services in the main menu bar are easily changed for your convenience. Simply follow these steps:

Uconnect 4 Drag & Drop Menu Bar

Uconnect 4C/4C NAV Drag & Drop Menu Bar

1. Press the "Apps" button to open the App screen.
2. Press and hold, then drag the selected App to replace an existing shortcut in the main menu bar.

The new shortcut will now be an active App/shortcut on the main menu bar.

CYBERSECURITY

Your vehicle may be a connected vehicle and may be equipped with both wired and wireless networks. These networks allow your vehicle to send and receive information. This information allows systems and features in your vehicle to function properly.

Your vehicle may be equipped with certain security features to reduce the risk of unauthorized and unlawful access to vehicle systems and wireless communications. Vehicle software technology continues to evolve over time and FCA US LLC, working with its suppliers, evaluates and takes appropriate steps as needed. Similar to a computer or other devices, your vehicle may require software updates to improve the usability and performance of your systems or to reduce the potential risk of unauthorized and unlawful access to your vehicle systems.

The risk of unauthorized and unlawful access to your vehicle systems may still exist, even if the most recent version of vehicle software (such as Uconnect software) is installed.

WARNING!

- **It is not possible to know or to predict all of the possible outcomes if your vehicle's systems are breached. It may be possible that vehicle systems, including safety related systems, could be impaired or a loss of vehicle control could occur that may result in an accident involving serious injury or death.**
- **ONLY insert media (e.g., USB, SD card, or CD) into your vehicle if it came from a trusted source. Media of unknown origin could possibly contain malicious software, and if installed in your vehicle, it may increase the possibility for vehicle systems to be breached.**
- **As always, if you experience unusual vehicle behavior, take your vehicle to your nearest authorized dealer immediately.**

NOTE:

- FCA US LLC or your dealer may contact you directly regarding software updates.
- To help further improve vehicle security and minimize the potential risk of a security breach, vehicle owners should:
  - Routinely check www.driveuconnect.com (U.S. Residents) or www.driveuconnect.ca (Canadian Residents) to learn about available Uconnect software updates.
  - Only connect and use trusted media devices (e.g. personal mobile phones, USBs, CDs).

Privacy of any wireless and wired communications cannot be assured. Third parties may unlawfully intercept information and private communications without your consent. For further information, refer to "Data Collection & Privacy" in your Uconnect Owner's Manual Supplement or "Onboard Diagnostic System (OBD II) Cybersecurity" in "Getting To Know Your Instrument Panel".

UCONNECT SETTINGS

The Uconnect system uses a combination of buttons on the touchscreen and/or buttons on the faceplate located on the center of the instrument panel that allow you to access and change the customer programmable features. Many features can vary by vehicle.

Buttons on the touchscreen are accessible on the Uconnect touchscreen.

Buttons on the faceplate are located below, and in the center of the instrument panel. In addition, there is a Scroll/Enter control knob located on the right side. Turn the control knob to scroll through menus and change settings (i.e., 30, 60, 90), push the center of the control knob one or more times to select or change a setting (i.e., ON, OFF).

Your Uconnect system may also have Screen Off and Mute buttons on the faceplate.

Push the Screen Off button on the faceplate to turn off the Uconnect screen. Push the Screen Off button on the faceplate a second time to turn the screen on.

Customer Programmable Features — Uconnect 4 Settings

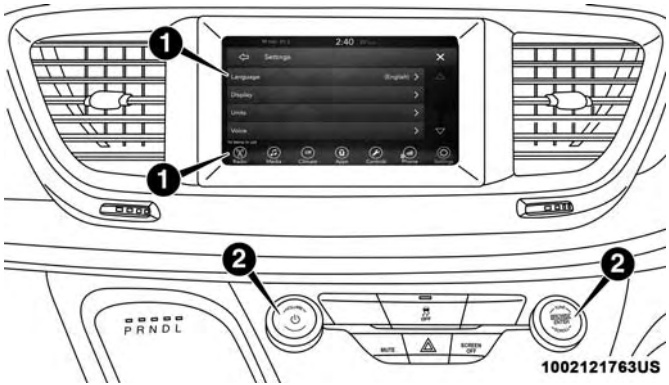

Uconnect 4 Buttons On The Touchscreen And Buttons On The Faceplate

1 — Uconnect Buttons On The Touchscreen
2 — Uconnect Buttons On The Faceplate

Press the "Apps" button then press the "Settings ⚙" button on the touchscreen to display the settings menu screen and press the Up or Down Arrow buttons on the right side of the screen to move up or down through the available settings. Settings gives you to access all of the available programmable features.

NOTE: Only one touchscreen area may be selected at a time.

Depending on the vehicle options, feature settings may vary.

To change features, select the desired feature. This will bring you to the available options for the feature. Change feature settings as desired by pressing and releasing the preferred setting option until a check-mark appears next to the setting. Once the desired selection is made, either press the back arrow or the "X" button on the touchscreen to close the settings screen. Pressing the Up or Down arrow buttons on the touchscreen allows you to toggle through the available settings. The list of programmable features include:

NOTE: All settings should be changed with the ignition in the "ON/RUN" position.

KeySense

This feature allows you to control specific settings when the KeySense key is in use. The vehicle's KeySense settings are protected by a unique 4-digit PIN, which the vehicle

owner creates when accessing the specific settings for the first time. This 4-digit PIN can only be reset by an authorized dealer.

After pressing the “KeySense” button on the touchscreen, and entering the KeySense PIN, the following settings will be available:

Setting Name	Selectable Options		
ParkSense — If Equipped	Sound Only	Sound and Display	
NOTE: The “ParkSense” system setting will scan for objects behind the vehicle when the transmission gear selector is in REVERSE and the vehicle speed is less than 7 mph (11 km/h), when enabled. It will provide an alert (audible and/or visual) to indicate the proximity to other objects. The system can be enabled with “Sound Only,” or “Sound and Display.”			
Front ParkSense Volume	Low	Medium	High
Rear ParkSense Volume	Low	Medium	High
Rear ParkSense Braking Assist	On	Off	
NOTE: When the “Rear ParkSense Braking Assist” feature is selected, the park assist system will detect objects located behind the vehicle and utilize autonomous braking to stop the vehicle.			

Setting Name	Selectable Options	
Blind Spot Alert — If Equipped	Lights	Lights & Chime
NOTE: When the "Blind Spot Alert" feature is selected, it will alert, visibly and/or audibly, to indicate objects are in your blind spot. The "Blind Spot Alert" feature can be activated in "Lights" mode. When this mode is selected, the Blind Spot Monitor (BSM) system is activated and will only show a visual alert in the exterior mirrors. When "Lights & Chime" mode is activated, the Blind Spot Monitor (BSM) will show a visual alert in the exterior mirrors as well as an audible alert when the turn signal is on. If your vehicle has experienced any damage in the area where the sensor is located, even if the fascia is not damaged, the sensor may have become misaligned. Take your vehicle to an authorized dealer to verify sensor alignment. Having a sensor that is misaligned will result in the BSM not operating to specification.		
Maximum Vehicle Speed	+	-
NOTE: The "Maximum Vehicle Speed" feature can be set to 65, 70, 75, 80, or 85 mph (90, 95, 100, 105, 110 km/h).		

Setting Name	Selectable Options	
Start Up Fuel Level Message	On	Off
Early Low Fuel Alert	On	Off

SiriusXM Setup	Channel Skip	Subscription Information

NOTE:
SiriusXM can be programmed to skip channels. To make your selection, press the “Channel Skip” button on the touchscreen, and select the channels you would like to skip.
New vehicle purchasers or lessees will receive a free limited time subscription to SiriusXM Satellite Radio with your radio. Following the expiration of the free services, it will be necessary to access the information on the Subscription Information screen to re-subscribe.

1. Press the “Subscription Info” button on the touchscreen to access the Subscription Information screen.
2. Write down the Sirius ID numbers for your receiver. To reactivate your service, either call the number listed on the screen or visit the provider online.

Language

After pressing the “Language” button on the touchscreen, the following settings will be available:

Setting Name	Selectable Options		
Language	English	Français	Español

NOTE:
When the “Set Language” feature is selected, you may select one of multiple languages (English / Français / Español) for all display nomenclature, including the trip functions and the navigation system (if equipped). Press the “Set Language” button on the touchscreen, then press the desired language button on the touchscreen until a check-mark appears next to the language, showing that setting has been selected.

Display

After pressing the “Display” button on the touchscreen, the following settings will be available.

Setting Name	Selectable Options	
Display Mode	Auto	Manual
Display Brightness With Headlights ON	1-10	1-10
NOTE: To make changes to the ″Display Brightness with Headlights ON″ setting, the headlights must be on and the interior dimmer switch must not be in the ″party″ or ″parade″ positions. The setting can be changed from 1-10.		
Display Brightness With Headlights OFF	1-10	1-10
NOTE: To make changes to the ″Display Brightness with Headlights OFF″ setting, the headlights must be off and the interior dimmer switch must not be in the ″party″ or ″parade″ positions.		
Set Theme	List of Themes	
NOTE: When the “Set Theme” feature is selected, you may select the theme for the display screen. To make your selection, press the ″Set Theme″ button on the touchscreen, then select the desired theme option button until a check-mark appears showing that the setting has been selected.		

Setting Name	Selectable Options	
Touchscreen Beep	On	Off
Control Screen Time-Out — If Equipped	On	Off
NOTE: When the "Control Screen Time-Out" feature is selected, the Controls Screen will stay open for five seconds before the screen times out. With the feature deselected, the screen will stay open until it is manually closed.		
Navigation Turn-By-Turn In Cluster — If Equipped	On	Off
NOTE: When the "Navigation Turn-By-Turn In Cluster" feature is selected, the turn-by-turn directions will appear in the instrument cluster display as the vehicle approaches a designated turn within a programmed route.		
Phone Pop-Ups Displayed in Cluster	On	Off

Units

After pressing the "Units" button on the touchscreen, the following settings will be available:

Setting Name	Selectable Options		
Units	US	Metric	Custom
NOTE: The "Custom" option allows you to set the "Speed" (MPH, or km/h), "Distance" (mi, or km), "Fuel Consumption" [MPG (US), MPG (UK), L/100 km, or km/L], "Pressure" (psi, kPa, or bar), and "Temperature" (°C, or °F) units of measure independently.			

Voice

After pressing the "Voice" button on the touchscreen, the following settings will be available:

Setting Name	Selectable Options		
Voice Response Length	Brief	Detailed	
Show Command List	Always	With Help	Never

Clock

After pressing the "Clock" button on the touchscreen, the following settings will be available:

Setting Name	Selectable Options	
Sync Time With GPS — If Equipped	On	Off
Set Time Hours	+	-
NOTE: The "Set Time Hours" feature will allow you to adjust the hours. The "Sync Time With GPS" button on the touch-screen must be unchecked.		
Set Time Minutes	+	-
NOTE: The "Set Time Minutes" feature will allow you to adjust the minutes. The "Sync Time With GPS" button on the touchscreen must be unchecked.		
Time Format	12 hr	24 hr
	AM	PM
NOTE: Within the "Set Time and Format" setting, press the corresponding arrow buttons on the touchscreen to adjust to the correct time.		

Camera

After pressing the "Camera" button on the touchscreen, the following settings will be available:

Setting Name	Selectable Options	
Surround View Camera Delay — If Equipped	On	Off
NOTE: The "Surround View Camera Delay" setting determines whether or not the screen will display the 360 degree view image with guidelines for up to ten seconds after the vehicle is shifted out of REVERSE. This delay will be canceled if the vehicle's speed exceeds 8 mph (13 km/h), the transmission is shifted into PARK, or the ignition is switched to the OFF position.		
Surround View Camera Guidelines — If Equipped	On	Off
NOTE: The "Surround View Rear Back Up Camera Active Guidelines" feature allows you to see active guidelines over the Surround View camera display whenever the gear selector is put into REVERSE or the Surround View button on the touchscreen is pressed. The image will be displayed on the radio touchscreen display.		

Setting Name	Selectable Options	
Active ParkView Backup Camera Guide Lines	On	Off
NOTE: The "ParkView Backup Camera Active Guide Lines" setting overlays the Rear Backup Camera image with active, or dynamic, grid lines to help illustrate the width of the vehicle and its project back up path, based on the steering wheel position when the option is checked. A dashed center line overlay indicates the center of the vehicle to assist with parking or aligning to a hitch/receiver.		
Fixed ParkView Backup Camera Guide Lines	On	Off

Safety/Assistance

After pressing the "Safety/Assistance" button on the touchscreen, the following settings will be available:

Setting Name	Selectable Options		
LaneSense Warning — If Equipped	Early	Medium	Late
NOTE: The "LaneSense Warning" setting determines at what distance the LaneSense system warns you, through steering wheel feedback, of a possible lane departure.			

Setting Name	Selectable Options		
LaneSense Strength — If Equipped	Low	Medium	High
ParkSense — If Equipped	Sound Only		Sound and Display
Front ParkSense Volume	Low	Medium	High
Rear ParkSense Volume	Low	Medium	High
Rear ParkSense Braking Assist — If Equipped	On	Off	
Blind Spot Alert — If Equipped	Off	Lights	Lights and Chime
NOTE: When the "Blind Spot Alert" feature is selected, the Blind Spot Monitor (BSM) system is activated and will show a visual alert in the outside mirrors, or it will show a visual alert in the outside mirrors as well as play an audible alert when the turn signal is on. When "Off" is selected, the Blind Spot Monitor (BSM) system is deactivated. If your vehicle has experienced any damage in the area where the sensor is located, even if the fascia is not damaged, the sensor may have become misaligned. Take your vehicle to an authorized dealer to verify sensor alignment. A sensor that is misaligned will result in the BSM not operating to specification.			
Hill Start Assist — If Equipped	On	Off	
Keysense	On	Off	

Mirrors & Wipers

After pressing the "Mirror and Wipers" button on the touchscreen, the following settings will be available:

Setting Name	Selectable Options	
Tilt Side Mirrors in Reverse	On	Off
Rain Sensing Auto Wipers	On	Off
Headlights with Wipers	On	Off

Brakes

After pressing the "Brakes" button on the touchscreen, the following settings will be available:

Setting Name	Selectable Options	
Auto Park Brake	On	Off
Brake Service	Yes	No
NOTE: Selecting the "Brake Service" feature will display a pop-up asking whether or you would like to retract the park brakes to all break system service.		

Lights

After pressing the “Lights” button on the touchscreen, the following settings will be available.

Setting Name	Selectable Options	
Headlight Off Delay	0 sec	60 sec
	30 sec	90 sec
NOTE: When the “Headlight Off Delay” feature is selected, it allows the adjustment of the amount of time the headlights remain on after the engine is shut off.		
Headlight Illumination On Approach	0 sec	60 sec
	30 sec	90 sec
NOTE: When this feature is selected, it allows the adjustment of the amount of time the headlights remain on after the doors are unlocked with the key fob.		
Headlights With Wipers — If Equipped	On	Off
Auto Dim High Beams— If Equipped	On	Off
Daytime Running Lights	Yes	No

Setting Name	Selectable Options	
Flash Lights With Lock	On	Off
Flash Lights With Sliding Door	On	Off

Doors & Locks

After pressing the "Doors & Locks" button on the touch-screen, the following settings will be available:

NOTE: The auto door lock feature default condition is enabled. When enabled, the door locks will lock automatically when the vehicle's speed exceeds 12 mph (20 km/h). The auto door lock feature can be enabled or disabled by an authorized dealer per written request of the customer. Please see an authorized dealer for service.

Setting Name	Selectable Options		
Auto Unlock On Exit	On	Off	
NOTE: When the "Auto Unlock On Exit" feature is selected, all doors will unlock when the vehicle is stopped and the transmission is in the PARK or NEUTRAL position and the driver's door is opened.			
Flash Lights With Lock	On	Off	
Sound Horn With Lock	Off	1st Press	2nd Press
Sound Horn With Remote	On	Off	

Setting Name	Selectable Options	
Start — If Equipped		
1st Press of Key Fob Unlocks — If Equipped	Driver	All
NOTE: When the "1st Press Of Key Fob Unlocks" feature's "Driver" option is selected, only the driver's door will unlock on the first push of the key fob unlock button; you must push the key fob unlock button twice to unlock the passenger's doors. When "All" is selected, all of the doors will unlock on the first press of the key fob unlock button. If "All" is programmed, all doors will unlock no matter which Passive Entry equipped door handle is grasped. If "Driver" is programmed, only the driver's door will unlock when the driver's door is grasped. Touching the handle more than once will only result in the driver's door opening once. If the driver door is opened, the interior door lock/unlock switch can be used to unlock all doors (or use key fob).		
Passive Entry	On	Off
Power Liftgate Alert	On	Off
NOTE: When the "Power Liftgate Alert" feature is selected, an alert plays when the power liftgate is raising or lowering.		
Sliding Door Alert	On	Off
NOTE: The "Sliding Door Alert" feature only occurs when the hands free feature is used, and not for other methods of opening the sliding door."		
Flashing Lights with Sliding Door — If Equipped	On	Off

Setting Name	Selectable Options	
Hands Free Power Lift Gate	On	Off
Hands Free Power Sliding Door	On	Off
Personal Settings Linked to Key Fob — If Equipped	On	Off
NOTE: The "Personal Settings Linked to Key Fob" feature provides automatic recall of all settings stored to a memory location (driver's seat, exterior mirrors, steering column position and radio station pre-sets) to enhance driver mobility when entering and exiting the vehicle. The seat returns to the memorized seat location, if the settings is set to "On," when the key fob is used to unlock the door.		
Remote Door Unlock/Door Unlock — If Equipped	Driver	All
NOTE: When the "Remote Door Unlock/Door Unlock" feature's "Driver" option is selected, only the driver's door will unlock on the first push of the key fob unlock button; you must push the key fob unlock button twice to unlock the passenger's doors. When "All" is selected, all of the doors will unlock on the first press of the key fob unlock button. If "All" is programmed, all doors will unlock no matter which Passive Entry equipped door handle is grasped. If "Driver" is programmed, only the driver's door will unlock when the driver's door is grasped. Touching the handle more than once will only result in the driver's door opening once. If the driver door is opened, the interior door lock/unlock switch can be used to unlock all doors (or use key fob).		

Auto-On Comfort — If Equipped

After pressing the "Auto-On Comfort " button on the touchscreen, the following settings will be available:

Setting Name	Selectable Options		
Auto-On Driver Heated/ Ventilated Seat & Steering Wheel With Vehicle Start — If Equipped	Off	Remote Start	All Starts
NOTE: When this feature is selected the driver's heated seat and heated steering wheel will automatically turn ON when temperatures are below 40° F (4.4° C). When temperatures are above 80° F (26.7° C) the driver vented seat will turn on.			

Engine Off Options

After pressing the "Engine Off Options" button on the touchscreen, the following settings will be available:

Setting Name	Selectable Options	
Engine Off Power Delay — If Equipped	0 sec	45 sec
	5 min	10 min

Setting Name	Selectable Options	
NOTE: When the “Engine Off Power Delay” feature is selected, the power window switches, radio, Uconnect phone system (if equipped), DVD video system (if equipped), power sunroof (if equipped), and power outlets will remain active for up to ten minutes after the ignition is cycled to OFF. Opening either front door will cancel this feature.		
Headlight Off Delay	0 sec	30 sec
	60 sec	90 sec
NOTE: When the “Headlight Off Delay” feature is selected, it allows the adjustment of the amount of time the headlights remain on after the engine is shut off.		
Easy Exit Seat — If Equipped	On	Off
NOTE: When the “Easy Exit Seat” feature is selected, it provides automatic driver seat positioning to enhance driver mobility when entering and exiting the vehicle.		

Audio

After pressing the “Audio” button on the touchscreen, the following settings will be available:

Setting Name	Selectable Options				
Equalizer	Bass		Mid		Treble
NOTE: When in this display you may adjust the “Bass”, “Mid” and “Treble” settings. Adjust the settings with the “+” and “–” setting buttons on the touchscreen or by selecting any point on the scale between the “+” and “–” buttons on the touchscreen. Bass/Mid/Treble also allow you to simply slide your finger up or down to change the setting, as well as press directly on the desired setting.					
Balance/Fade	Up Arrow Button	Down Arrow Button	Left Arrow Button	Right Arrow Button	Center “C” Button
NOTE: When in this display you may adjust the “Balance/Fade” of the audio by using the “Arrow” button on the touchscreen to adjust the sound level from the front and rear or right and left side speakers. Press the “Center ‘C’ Button” on the touchscreen to reset the balance and fade to the factory setting.					

Setting Name	Selectable Options			
Speed Adjusted Volume	Off	1	2	3
Surround Sound — If Equipped	On	Off		
Loudness	Yes	No		
NOTE: This feature improves sound quality at lower volumes when enabled.				
AUX Volume Offset — If Equipped	On	Off		
NOTE: This feature provides the ability to tune the audio level for portable devices connected through the AUX input.				
AutoPlay	On	Off		
NOTE: The “AutoPlay” setting, when activated, automatically starts playing music off of a connect device as soon as it is connected.				

Compass Settings — If Equipped

After pressing the "Compass Settings" button on the touchscreen, the following settings will be available:

NOTE: Before compass calibration is performed, the compass variance zone should be set for best results.

Setting Name	Selectable Options														
Compass Variance	1	2	3	4	5	6	7	8	9	10	11	12	13	14	15
NOTE: When the "Compass Variance" feature is selected, it allows the compass variance to be set to any number from 1 to 15 per the compass variance zone map figure. Compass Variance is the difference between Magnetic North and Geographic North. To compensate for the differences the variance should be set for the zone where the vehicle is being driven, illustrated in the zone map. Once properly set, the compass will automatically compensate for the differences when calibrated, and provide the most accurate compass headings.															
Compass Calibration	Yes														
NOTE: Press "Compass Calibration" on the touchscreen to enter calibration. To start calibration of the compass, press the "Yes" button on the touchscreen and complete one or more 360-degree turns (in an area free from large metal or metallic objects). A message will appear on the touchscreen when the compass has been successfully calibrated. Keep magnetic materials away from the rear view mirror, such as Mobile Phones, Laptops and Radar Detectors. This is where the compass module is located, and it can cause interference with the compass sensor, and it may give false readings.															

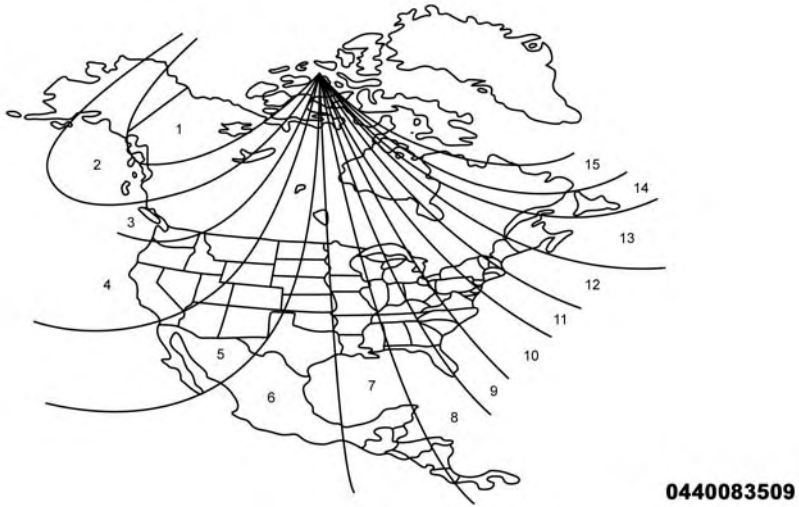

Compass Variance Zone Map

Phone/Bluetooth

After pressing the "Phone/Bluetooth" button on the touch-screen, the following settings will be available:

Setting Name	Selectable Options	
Phone Pop-ups Displayed in Cluster	On	Off
Do Not Disturb	List of Settings	
NOTE: The "Do Not Disturb" feature allows the paired phone to send a predetermined call, text, or both, to any incoming call, or text, before sending it directly to voicemail. It also keeps a counter of all missed calls and texts while on the road.		
Paired Phones and Audio Devices	List of Paired Phones	
NOTE: This feature shows which phones are paired to the Phone/Bluetooth system. For further information, refer to the Uconnect Owner's Manual Supplement.		
Smartphone Projection Manager	List Of Connected Phones	
NOTE: Pressing "Smartphone Projection Manager" feature allows you to see a list of all connected phones and gives you the option to determine which phone will be used for projection (Apple CarPlay or Android Auto).		

SiriusXM Setup — If Equipped

After pressing the "SiriusXM Setup" button on the touch-screen, the following settings will be available:

Setting Name	Selectable Options	
Tune Start	On	Off
Channel Skip	List of Channels	
NOTE: SiriusXM can be programmed to designate a group of channels that are the most desirable to listen to or to exclude undesirable channels while scanning. This feature allows you to select the channels you would like to skip.		
Subscription Info	Sirius ID	
NOTE: New vehicle purchasers or lessees will receive a free limited time subscription to SiriusXM Satellite Radio with your radio. Following the expiration of the free services, it will be necessary to access the information on the Subscription Information screen to re-subscribe. 1. Press the "Subscription Info" button on the touchscreen to access the Subscription Information screen. 2. Write down the Sirius ID numbers for your receiver. To reactivate your service, either call the number listed on the screen or visit the provider online.		

Restore Settings

After pressing the “Restore Settings” button on the touch-screen, the following settings will be available:

Setting Name	Selectable Options	
Reset App Drawer to Default Order	OK	Cancel
Restore Settings to Default	OK	Cancel
NOTE: When the “Restore Settings to Default” feature is selected it resets all settings to their default settings.		
Clear Personal Data	OK	Cancel
NOTE: When the “Clear Personal Data” feature is selected it will remove all personal data including Bluetooth devices and presets.		

Customer Programmable Features — Uconnect 4C/4C NAV Settings

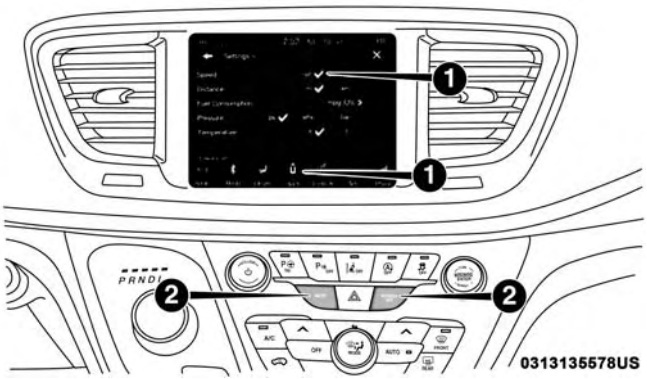

Uconnect 4C/4C NAV Buttons On The Touchscreen And Buttons On The Faceplate

1 — Uconnect Buttons On The Touchscreen
2 — Uconnect Buttons On The Faceplate

Press the "Apps" button, then press the "Settings" button on the touchscreen to display the menu setting screen. In this mode the Uconnect system allows you to access all of the available programmable features.

NOTE:

- Only one touchscreen area may be selected at a time.
- Depending on the vehicles options, feature settings may vary.

When making a selection, press the button on the touchscreen to enter the desired mode. Once in the desired mode, press and release the preferred setting "option" until a check-mark appears next to the setting, showing that setting has been selected. Once the setting is complete, either press the Back Arrow button on the touchscreen to return to the previous menu, or press the "X" button on the touchscreen to close out of the settings screen. Pressing the Up or Down Arrow button on the right side of the screen will allow you to toggle up or down through the available settings.

KeySense

The vehicle's KeySense settings are protected by a unique four digit PIN, which the vehicle owner creates when accessing the specific settings for the first time. This four digit PIN can only be reset by an authorized dealer.

After pressing the “KeySense” button on the touchscreen, and entering the KeySense PIN, the following settings will be available:

Setting Name	Selectable Options
Automatic Emergency Braking — If Equipped	List Of Settings

When “Automatic Emergency Braking” is selected, the following options will appear:

- **Forward Collision Warning — If Equipped**: Select “Only Warning” or “Warning + Active Braking”

  NOTE:
  Changing the FCW status to “Off” prevents the system from warning you of a possible collision with the vehicle in front of you.
  The FCW system state is kept in memory from one ignition cycle to the next. If the system is turned OFF, it will remain off when the vehicle is restarted.
  Forward Collision Warning includes Advanced Brake Assist (ABA). The ABA applies additional brake pressure when the driver requests insufficient brake pressure to avoid a potential frontal collision. When the “Sound Only” option is selected a chime will sound alerting you of a possible collision with the vehicle in front of you and more brake pressure is needed. When the “Sound and Brake” option is selected, it will apply the brakes to slow your vehicle in case of potential forward collision and sound an audible chime to alert you.

Setting Name	Selectable Options		
• **Forward Collision Warning Sensitivity — If Equipped**: Select “Near,” “Med” or “Far” **NOTE:** The “Forward Collision Warning Sensitivity” setting determines at what relative distance the vehicle directly in front of you needs to be at, before the system will warn you of a possible collision with the vehicle directly in front of you, based on the option is selected. “Far” will give you the most amount of reaction time, whereas “Near” will give you the least amount of reaction time, based on the distance between the two vehicles.			
Rear ParkSense Volume	Low	Medium	High
Rear ParkSense Braking Assist	On	Off	
NOTE: When the “Rear ParkSense Braking Assist” feature is selected, the park assist system will detect objects located behind the vehicle and utilize autonomous braking to stop the vehicle.			

Setting Name	Selectable Options	
Blind Spot Alert — If Equipped	Lights	Lights & Chime
NOTE: When the “Blind Spot Alert” feature is selected, it will alert, visibly and/or audibly, to indicate objects are in your blind spot. The “Blind Spot Alert” feature can be activated in “Lights” mode. When this mode is selected, the Blind Spot Monitor (BSM) system is activated and will only show a visual alert in the exterior mirrors. When “Lights & Chime” mode is activated, the Blind Spot Monitor (BSM) will show a visual alert in the exterior mirrors as well as an audible alert when the turn signal is on. If your vehicle has experienced any damage in the area where the sensor is located, even if the fascia is not damaged, the sensor may have become misaligned. Take your vehicle to an authorized dealer to verify sensor alignment. Having a sensor that is misaligned will result in the BSM not operating to specification.		
Maximum Vehicle Speed	+	-
NOTE: The “Maximum Vehicle Speed” feature can be set to 65, 70, 75, 80, or 85 mph (90, 95, 100, 105, 110 km/h).		
SiriusXM Setup	Channel Skip	Subscription Information
NOTE: SiriusXM can be programmed to skip channels. To make your selection, press the “Channel Skip” button on the touchscreen, select the channels you would like to skip. New vehicle purchasers or lessees will receive a free limited time subscription to SiriusXM Satellite Radio with your radio. Following the expiration of the free services, it will be necessary to access the information on the Subscription Information screen to re-subscribe.		

Setting Name	Selectable Options
1. Press the “Subscription Info” button on the touchscreen to access the Subscription Information screen. 2. Write down the Sirius ID numbers for your receiver. To reactivate your service, either call the number listed on the screen or visit the provider online. SiriusXM Travel Link is a separate subscription.	

Language

After pressing the “Language” button on the touchscreen, the following settings will be available:

Setting Name	Selectable Options
Language	List of Languages
NOTE: When the “Set Language” feature is selected, you may select one of multiple languages (English / Français / Español) for all display nomenclature, including the trip functions and the navigation system (if equipped). Press the “Set Language” button on the touchscreen, then press the desired language button on the touchscreen until a check-mark appears next to the language, showing that setting has been selected.	

Display

After pressing the “Display” button on the touchscreen, the following settings will be available:

Setting Name	Selectable Options	
Display Mode	Manual	Auto
Display Brightness With Headlights ON	+	-
NOTE: To make changes to the ″Display Brightness with Headlights ON″ setting, the headlights must be on and the interior dimmer switch must not be in the ″party″ or ″parade″ positions.		
Display Brightness With Headlights OFF	+	-
NOTE: To make changes to the ″Display Brightness with Headlights OFF″ setting, the headlights must be off and the interior dimmer switch must not be in the ″party″ or ″parade″ positions.		
Set Theme	On	Off
NOTE: When the “Set Theme” feature is selected, you may select the theme for the display screen. To make your selection, press the ″Set Theme″ button on the touchscreen, then select the desired theme option button until a check-mark appears showing that the setting has been selected.		

Setting Name	Selectable Options	
Touchscreen Beep	On	Off
Control Screen Time-Out — If Equipped	On	Off
NOTE: When the "Control Screen Time-Out" feature is selected, the Controls Screen will stay open for five seconds before the screen times out. With the feature deselected, the screen will stay open until it is manually closed.		
Navigation Turn-By-Turn In Cluster — If Equipped	On	Off
NOTE: When the "Navigation Turn-By-Turn In Cluster" feature is selected, the turn-by-turn directions will appear in the instrument cluster display as the vehicle approaches a designated turn within a programmed route.		
Phone Pop-ups Displayed in Cluster	On	Off

Units

After pressing the "Units" button on the touchscreen, the following settings will be available:

Setting Name	Selectable Options		
Units	US	Metric	Custom
NOTE: The "Custom" option allows you to set the "Speed" (MPH, or km/h), "Distance" (mi, or km), "Fuel Consumption" [MPG (US), MPG (UK), L/100 km, or km/L], "Pressure" (psi, kPa, or bar), and "Temperature" (°C, or °F) units of measure independently.			

Voice

After pressing the "Voice" button on the touchscreen, the following settings will be available:

Setting Name	Selectable Options		
Voice Response Length	Brief	Detailed	
Show Command List	Never	With Help	Always

Camera

After pressing the “Camera” button on the touchscreen, the following settings will be available:

Setting Name	Selectable Options	
Surround View Camera — If Equipped	On	Off
NOTE: The “Surround View Camera” feature displays a complete 360 degree view of the vehicle’s exterior environment while backing up.		
Surround View Camera Delay — If Equipped	On	Off
NOTE: The “Surround View Camera Delay” setting determines whether or not the screen will display the 360 degree view image with guidelines for up to ten seconds after the vehicle is shifted out of REVERSE. This delay will be canceled if the vehicle’s speed exceeds 8 mph (13 km/h), the transmission is shifted into PARK, or the ignition is switched to the OFF position.		

Setting Name	Selectable Options	
Surround View Camera Guidelines — If Equipped	On	Off
NOTE: The “Surround View Rear Back Up Camera Active Guidelines” feature allows you to see active guidelines over the Surround View camera display whenever the gear selector is put into REVERSE or the Surround View button on the touchscreen is pressed. The image will be displayed on the radio touchscreen display.		
ParkView Backup Camera Delay	On	Off
NOTE: The “ParkView Backup Camera Delay” setting determines whether or not the screen will display the rear view image with dynamic grid lines for up to ten seconds after the vehicle is shifted out of REVERSE. This delay will be canceled if the vehicle’s speed exceeds 8 mph (13 km/h), the transmission is shifted into PARK, or the ignition is switched to the OFF position.		
ParkView Backup Camera Active Guide Lines	On	Off
NOTE: The “ParkView Backup Camera Active Guide Lines” feature overlays the Rear Backup Camera image with active, or dynamic, grid lines to help illustrate the width of the vehicle and its project back up path, based on the steering wheel position when the option is checked. A dashed center line overlay indicates the center of the vehicle to assist with parking or aligning to a hitch/receiver.		

Clock

After pressing the "Clock" button on the touchscreen, the following settings will be available:

Setting Name	Selectable Options	
Sync Time With GPS — If Equipped	On	Off
Set Time Hours	+	-
NOTE: The "Set Time Hours" feature will allow you to adjust the hours. The "Sync Time With GPS" button on the touch-screen must be unchecked.		
Set Time Minutes	+	-
NOTE: The "Set Time Minutes" feature will allow you to adjust the minutes. The "Sync Time with GPS" button on the touch-screen must be unchecked.		
Time Format	12hrs	24hrs
	AM	PM

Safety & Driving Assistance

After pressing the “Safety & Driving Assistance” button on the touchscreen, the following settings will be available:

Setting Name	Selectable Options
Automatic Emergency Braking — If Equipped	List Of Settings
When “Automatic Emergency Braking” is selected, the following options will appear: • **Forward Collision Warning — If Equipped**: Select “Only Warning” or “Warning + Active Braking” **NOTE:** Changing the FCW status to “Off” prevents the system from warning you of a possible collision with the vehicle in front of you. The FCW system state is kept in memory from one ignition cycle to the next. If the system is turned OFF, it will remain off when the vehicle is restarted. Forward Collision Warning includes Advanced Brake Assist (ABA). The ABA applies additional brake pressure when the driver requests insufficient brake pressure to avoid a potential frontal collision. When the “Sound Only” option is selected a chime will sound alerting you of a possible collision with the vehicle in front of you and more brake pressure is needed. When the “Sound and Brake” option is selected, it will apply the brakes to slow your vehicle in case of potential forward collision and sound an audible chime to alert you.	

Setting Name	Selectable Options		
• **Forward Collision Warning Sensitivity — If Equipped**: Select “Near,” “Med” or “Far” **NOTE:** The “Forward Collision Warning Sensitivity” setting determines at what relative distance the vehicle directly in front of you needs to be at, before the system will warn you of a possible collision with the vehicle directly in front of you, based on the option selected. “Far” will give you the most amount of reaction time, whereas “Near” will give you the least amount of reaction time, based on the distance between the two vehicles.			
ParkSense — If Equipped	Sound Only	Sound and Display	
NOTE: The “ParkSense” system setting will scan for objects behind the vehicle when the transmission gear selector is in REVERSE and the vehicle speed is less than 7 mph (11 km/h), when enabled. It will provide an alert (audible and/or visual) to indicate the proximity to other objects. The system can be enabled with “Sound Only,” or “Sound and Display.”			
Front ParkSense Volume	Low	Medium	High
Rear ParkSense Volume	Low	Medium	High
Sliding Door Alert — If Equipped	On	Off	
NOTE: When the “Sliding Door Alert” feature is selected, a chime plays when the sliding door reverses or an obstacle is sensed.			

Setting Name	Selectable Options		
LaneSense Warning — If Equipped	Early	Medium	Late
NOTE: The "LaneSense Warning" setting determines at what distance the LaneSense system will warn you, through steering wheel feedback, of a possible lane departure.			
LaneSense Strength — If Equipped	Low	Medium	High
Blind Spot Alert — If Equipped	Off	Lights	Lights and Chime
NOTE: When the "Blind Spot Alert" feature is selected, the Blind Spot Monitor (BSM) system is activated and will show a visual alert in the outside mirrors, or it will show a visual alert in the outside mirrors as well as play an audible alert when the turn signal is on. When "Off" is selected, the Blind Spot Monitor (BSM) system is deactivated. If your vehicle has experienced any damage in the area where the sensor is located, even if the fascia is not damaged, the sensor may have become misaligned. Take your vehicle to an authorized dealer to verify sensor alignment. A sensor that is misaligned will result in the BSM not operating to specification.			
Hill Start Assist — If Equipped	On	Off	

Mirrors & Wipers

After pressing the "Mirror and Wipers" button on the touchscreen, the following settings will be available:

Setting Name	Selectable Options	
Rain Sensing Auto Wipers	On	Off
Tilt Side Mirrors in Reverse	On	Off
Headlights with Wipers	On	Off

Brakes

After pressing the "Brakes" button on the touchscreen, the following settings will be available:

Setting Name	Selectable Options	
Auto Park Brake	On	Off
Brake Service	Yes	No
NOTE: Selecting the "Brake Service" feature will display a pop-up asking whether or you would like to retract the park brakes to all break system service.		

Lights

After pressing the “Lights” button on the touchscreen, the following settings will be available:

Setting Name	Selectable Options	
Headlight Off Delay	0 sec	30 sec
	60 sec	90 sec
NOTE: When the “Headlight Off Delay” feature is selected, it allows the adjustment of the amount of time the headlights remain on after the vehicle is shut off.		
Headlight Illumination On Approach	0 sec	30 sec
	60 sec	90 sec
NOTE: When the “Headlight Illumination On Approach” feature is selected, it allows the adjustment of the amount of time the headlights remain on after the doors are unlocked with the key fob.		
Headlights With Wipers — If Equipped	On	Off
Auto Dim High Beams— If Equipped	On	Off

Setting Name	Selectable Options	
NOTE: When the "Auto Dim High Beams" feature is selected, the high beam headlights will activate/deactivate automatically under certain conditions.		
Daytime Running Lights	On	Off
Flash Lights With Lock	On	Off
Flash Lights With Sliding Door	On	Off

Doors & Locks

After pressing the "Doors & Locks" button on the touchscreen, the following settings will be available:

NOTE: The auto door lock feature default condition is enabled. When enabled, the door locks will lock automatically when the vehicle's speed exceeds 12 mph (20 km/h).

The auto door lock feature can be enabled or disabled by an authorized dealer per written request of the customer. Please see an authorized dealer for service.

Setting Name	Selectable Options	
Auto Unlock On Exit	On	Off
NOTE: When the "Auto Unlock On Exit" feature is selected, all doors will unlock when the vehicle is stopped and the transmission is in the PARK or NEUTRAL position and the driver's door is opened.		

Setting Name	Selectable Options		
Flash Lights With Lock	On	Off	
Sound Horn With Lock — If Equipped	Off	1st Press	2nd Press
Sound Horn With Remote Start — If Equipped	On	Off	
1st Press Of Key Fob Unlocks	Driver Door	All Doors	
NOTE: When the “1st Press Of Key Fob Unlocks” feature’s “Driver” option is selected, only the driver’s door will unlock on the first push of the key fob unlock button; you must push the key fob unlock button twice to unlock the passenger’s doors. When “All” is selected, all of the doors will unlock on the first press of the key fob unlock button. If “All” is programmed, all doors will unlock no matter which Passive Entry equipped door handle is grasped. If “Driver” is programmed, only the driver’s door will unlock when the driver’s door is grasped. Touching the handle more than once will only result in the driver’s door opening once. If the driver door is opened, the interior door lock/unlock switch can be used to unlock all doors (or use key fob).			
Passive Entry	On	Off	
Power Liftgate Alert	On	Off	
NOTE: When the “Power Liftgate Alert” feature is selected, an alert plays when the power liftgate is raising or lowering.			

Setting Name	Selectable Options	
Sliding Door Alert	On	Off
NOTE: When the “Sliding Door Alert” feature is selected, a chime plays when the sliding door reverses or an obstacle is sensed.		
Flash Lights with Sliding Door	On	Off
Hands Free Power Lift Gate	On	Off
Hands Free Sliding Door	On	Off
Personal Settings Linked to Key Fob — If Equipped	On	Off
NOTE: The “Personal Settings Linked to Key Fob” feature provides automatic recall of all settings stored to a memory location (driver’s seat, exterior mirrors, steering column position and radio station pre-sets) to enhance driver mobility when entering and exiting the vehicle. The seat returns to the memorized seat location, if the settings is set to “On,” when the key fob is used to unlock the door.		

Auto-On Comfort — If Equipped

After pressing the "Auto-On Comfort" button on the touchscreen, the following settings will be available:

Setting Name	Selectable Options		
Auto-On Driver Heated/ Ventilated Seat & Steering Wheel With Vehicle Start — If Equipped	Off	Remote Start	All Starts
NOTE: When this feature is selected, the driver's heated seat and heated steering wheel will automatically turn on when temperatures are below 40° F (4.4° C). When temperatures are above 80° F (26.7° C) the driver vented seat will turn on.			

Engine Off Options

After pressing the "Engine Off Options" button on the touchscreen, the following settings will be available:

Setting Name	Selectable Options	
Engine Off Power Delay — If Equipped	0 sec	45 sec
	5 min	10 min

Setting Name	Selectable Options	
NOTE: When the "Engine Off Power Delay" feature is selected, the power window switches, radio, Uconnect phone system (if equipped), DVD video system (if equipped), power sunroof (if equipped), and power outlets will remain active for up to ten minutes after the ignition is cycled to OFF. Opening either front door will cancel this feature.		
Headlight Off Delay	0 sec	30 sec
	60 sec	90 sec
NOTE: When the "Headlight Off Delay" feature is selected, it allows the adjustment of the amount of time the headlights remain on after the engine is shut off.		
Easy Exit Seat — If Equipped	On	Off
NOTE: When the "Easy Exit Seat" feature is selected, it provides automatic driver seat positioning to enhance driver mobility when entering and exiting the vehicle.		

Audio

After pressing the “Audio” button on the touchscreen, the following settings will be available:

Setting Name	Selectable Options			
Balance/Fade	Speaker Icon			
NOTE: When in this display you may adjust the “Balance/Fade” of the audio by pressing and dragging the “Speaker Icon” toward any location in the box.				
Equalizer	Bass	Mid	Treble	
NOTE: When in this display you may adjust the “Bass”, “Mid” and “Treble” settings. Adjust the settings with the “+” and “–” setting buttons on the touchscreen or by selecting any point on the scale between the “+” and “–” buttons on the touchscreen. Bass/Mid/Treble also allow you to simply slide your finger up or down to change the setting, as well as press directly on the desired setting.				
Speed Adjusted Volume	Off	1	2	3
Surround Sound — If Equipped	On		Off	
AUX Volume Offset — If Equipped	+		-	
NOTE: This feature provides the ability to tune the audio level for portable devices connected through the AUX input.				
Auto Play	On		Off	

Phone/Bluetooth

After pressing the "Phone/Bluetooth" button on the touch-screen, the following settings will be available:

Setting Name	Selectable Options	
Phone Pop-ups Displayed in Cluster	On	Off
Do Not Disturb	List Of Settings	
NOTE: Press "Do Not Disturb" to access the available settings. The following settings are: Auto Reply (both, text, call), Auto Reply Message (custom, default) and Custom Auto Reply Message (create message).		
Paired Phones And Audio Devices	List Of Paired Phones	
NOTE: This feature shows which phones and audio devices are paired to the Phone/Bluetooth system. For further information, refer to the Uconnect Owner's Manual Supplement.		
Smartphone Projection Manager	On	Off

SiriusXM Setup — If Equipped

After pressing the "SiriusXM Setup" button on the touchscreen, the following settings will be available:

Setting Name	Selectable Options	
Tune Start	On	Off
Channel Skip	List of Channels	
NOTE: SiriusXM can be programmed to designate a group of channels that are the most desirable to listen to or to exclude undesirable channels while scanning. This feature allows you to select the channels you would like to skip.		
Subscription Info	Sirius ID	
NOTE: New vehicle purchasers or lessees receive a free limited time subscription to SiriusXM Satellite Radio with your radio. Following the expiration of the free services, it will be necessary to access the information on the Subscription Information screen to re-subscribe. 1. Press the "Subscription Info" button on the touchscreen to access the Subscription Information screen. 2. Write down the Sirius ID numbers for your receiver. To reactivate your service, either call the number listed on the screen or visit the provider online. SiriusXM Travel Link is a separate subscription.		

Accessibility — If Equipped

After pressing the "Accessibility" button on the touchscreen, the following settings will be available:

Setting Name	Selectable Options	
Accessibility	On	Off
NOTE: The "Accessibility" feature announces a function prior to performing the action selected when using DVD/Blu-ray and USB Video functions, when it is activated. For example, when activated, and the "Play" button is selected, the system will announce "Play button selected", and then once pressed again the "Play" button will perform its action.		

Reset

After pressing the "Reset" button on the touchscreen, the following settings will be available:

Setting Name	Selectable Options	
Restore App Drawer to Default Order	OK	Cancel
Restore Settings	OK	Cancel
NOTE: When the "Restore Settings" feature is selected it will reset all settings to their default settings.		

Setting Name	Selectable Options	
Clear Personal Data	OK	Cancel
NOTE: When the “Clear Personal Data” feature is selected it will remove all personal data including Bluetooth devices and presets.		

System Information

After pressing the “System Information” button on the touchscreen, the following settings will be available:

Setting Name	Selectable Options
Software License	System Software Information Screen
NOTE: When this feature is selected, a “Software License” screen will appear, displaying the system software version.	

STEERING WHEEL AUDIO CONTROLS

The remote sound system controls are located on the rear surface of the steering wheel at the three and nine o'clock positions. Both controls are rocker-type switches with a push-button in the center.

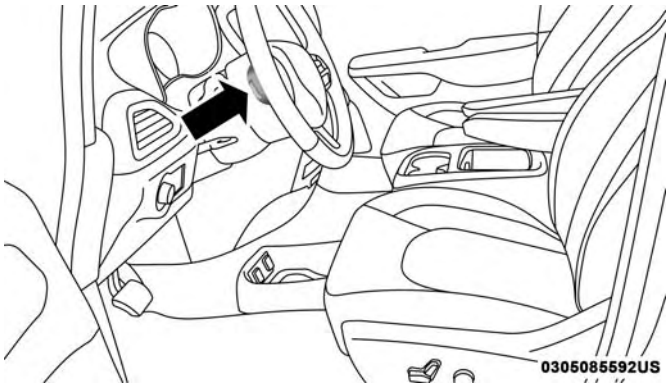

Steering Wheel Audio Controls (Back View Of Steering Wheel)

The right-hand control is a rocker-type switch with a push-button in the center and controls the volume and mode of the sound system. Pushing the top of the rocker switch will increase the volume, and pushing the bottom of the rocker switch will decrease the volume.

Pushing the center button will make the radio switch between the various modes available (AM/FM/SXM or Media etc.)

The left-hand control is a rocker-type switch with a push-button in the center. The function of the left-hand control is different depending on which mode you are in.

The following describes the left-hand control operation in each mode.

Radio Operation

Pushing the top of the switch will "Seek" up for the next listenable station and pushing the bottom of the switch will "Seek" down for the next listenable station.

The button located in the center of the left-hand control will tune to the next preset station that you have programmed in the radio preset button.

Media Mode

Pushing the top of the switch once goes to the next track on the selected media (AUX/USB/Bluetooth). Pushing the bottom of the switch once goes to the beginning of the current track, or to the beginning of the previous track if it is within eight seconds after the current track begins to play.

AUX/USB/MP3 CONTROL

There are numerous USB ports located throughout the vehicle. This feature allows an external USB device to be plugged into the USB port.

For further information, refer to the Uconnect Owner's Manual Supplement.

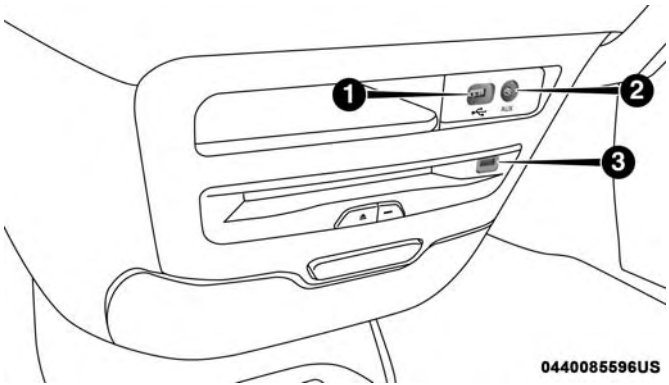

Front Center Stack AUX Jack And USB Ports

1 — USB Port
2 — AUX Jack
3 — Uconnect Theater Rear Data USB Port

The data USB ports are located on the instrument panel below the climate controls.

There are multiple USB "charge only" ports in this vehicle.

- In the center console
- On the back of the front row seats in the Uconnect Theater Media hubs
- Above the rear cup holders in the third row of seats

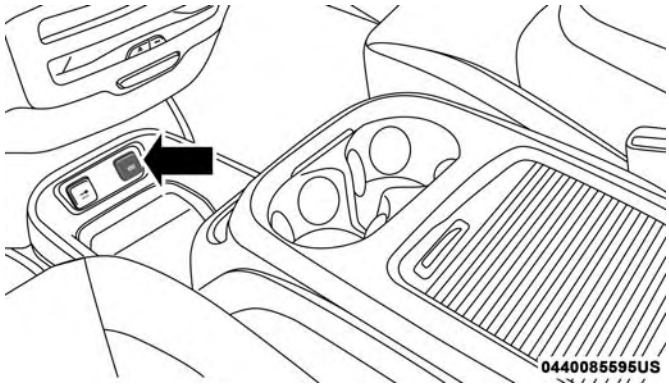

Center Console USB Charging Port

NOTE: The USB outlet in the bottom of the instrument panel can be switched from "ignition" only to constant "battery" powered all the time. See an authorized dealer for details.

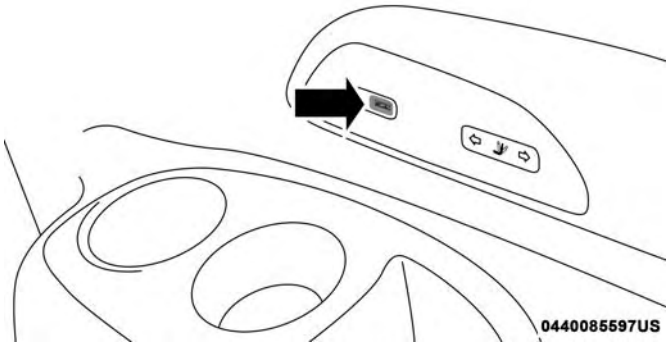

3rd Row USB Charging Port

NOTE: The USB "Charge Only" ports will recharge battery operated USB devices when connected.

UCONNECT THEATER — IF EQUIPPED

Uconnect Theater Overview

Your Uconnect Theater is designed to give your family years of enjoyment.

There are multiple ways to interact with your Uconnect Theater system;

- Play your favorite CDs, DVDs or Blu-ray Discs
- Plug and play a variety of standard video games or devices into the HDMI port
- Listen to audio over the wireless headphones
- Plug and play a variety of devices into the Video USB port
- Plug in standard headphones to listen to audio
- Project your mobile phone, or tablet screen onto the rear Uconnect Theater touchscreens — If Equipped

Please review this Owner's Manual to become familiar with its features and operation.

Getting Started

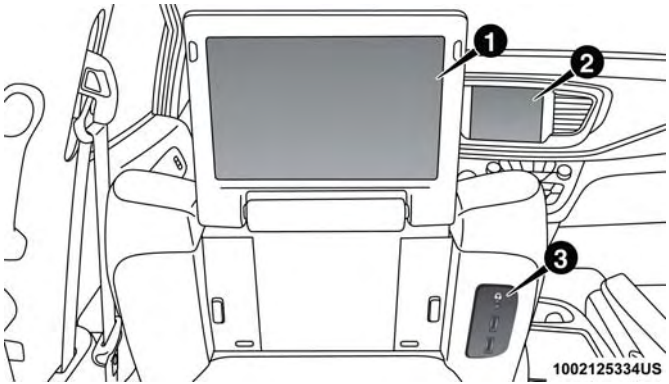

Uconnect Theater Screen

1 — Uconnect Theater Touchscreen (Rear Touchscreens)
2 — Uconnect System (Front Touchscreen)
3 — Uconnect Theater Media Hub (Headphone Jack, HDMI Input, USB Charge Only Port)

There are three different ways to operate the features of the Uconnect Theater:

- The Remote Control
- The Uconnect System
- The Individual Uconnect Theater Touchscreens

Accessing The System From The Uconnect System

Uconnect Theater Button

You can access your Uconnect Theater system from the radio touchscreen following the steps below:

Option 1

1. Press the “Media” button.
2. Press the “Uconnect Theater” button icon.

Option 2

1. Press the "Apps" button on the bottom of the touchscreen.
2. Press the Uconnect Theater button on the touchscreen. You may need to navigate to different pages in the Apps drawer to find the Uconnect Theater button.

NOTE: The Uconnect Theater icon may be dragged and dropped down from the Apps drawer to the drag & drop menu to create an App/shortcut. Refer to "Drag & Drop Menu Bar" in this section for more information.

Uconnect Theater Controls

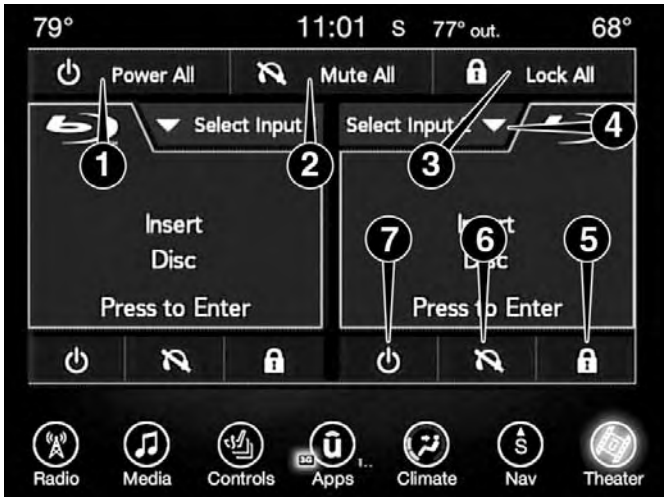

Uconnect Theater Summary Screen

1 — Power All On/Off (Controls Both Screens)
2 — Mute All On/Off (Controls Both Screens)
3 — Lock All On/Off (Controls Both Screens)
4 — Source Drop Down List for Current Screen
5 — Lock On/Off for Current Screen
6 — Mute On/Off for Current Screen
7 — Power On/Off for Current Screen

Parents can control certain features of the system with the "Uconnect Theater Controls" screens, right from the Uconnect touchscreen radio. Options include:

- Change media sources or select APPS by using the drop down list
- Lock one or both screens
- Mute an individual screen or both screens
- Turn on/off one or both screens
- View media showing on a specific screen while gear selector is in PARK
- Listen in to a particular Uconnect Theater screen through the vehicle's sound system by selecting the "Listen In" feature after selecting the "Press to Enter" option.

Individual Main Screen Listen In Feature

Accessing The System From The Uconnect Theater Rear Screens

You can also access your Uconnect Theater system from the rear screens from the steps below:

1. Lift screen upward, the system will automatically power on.

NOTE: A message asking if you would like to pair a remote will pop up if one has not already been paired to the system.

2. If "YES" is selected to Pair a Remote, push any button on the remote and pairing will immediately start.
3. If "NO" is selected, the Uconnect Theater home screen will pop up.

NOTE:

- There will be a touchscreen notification message when pairing is successful.
- Test to make sure the remote is successfully paired by dragging your finger across the gesture pad. If you do not see the on screen arrow, try using the "Screen" button on the remote to switch between rear screen one and rear screen two to make sure the remote is controlling the intended screen. It may take several seconds for the remote to react when initially paired.
- If remote does not pair, refer to "Pairing The Remote" section for an alternative pairing process.

Pairing The Remote

Remote Pairing

If the remote needs to be paired to your Uconnect Theater system, follow the procedure below:

1. Install batteries into both remotes.
2. Press the Settings icon found in the lower right portion of the Uconnect Theater touchscreen.

3. Press the “Remote” button towards the bottom of the Uconnect Theater touchscreen, within the settings menu.
4. Press the “Pair Remote” option. Press the “OK” button. A touchscreen notification will appear indicating that your remote has been paired successfully or unsuccessfully.
5. Test to make sure the remote is successfully paired by dragging your finger across the gesture pad. If you do not see the on screen arrow, try using the “Screen” button on the remote to switch between rear screen one and rear screen two to make sure the remote is controlling the intended screen. It may take several seconds for the remote to react when initially paired.

NOTE:

- If pairing fails, try resetting the remote by pushing and holding the Play/Pause, Down arrow, and the Screen button simultaneously for about five seconds until the back light flashes.
- If the remote is ever non-operational, try re-pairing the remote.
- The system can accommodate up to ten paired remote controls.

Unpairing The Remote

In events such as updating the Uconnect Theater software, or taking a remote to another vehicle, the remote will need to be unpaired from your Uconnect Theater system. To unpair the remote:

1. Press the Settings icon found in the lower right portion of the Uconnect Theater touchscreen.
2. Press the “Remote” button towards the bottom of the Uconnect Theater touchscreen, within the settings menu.
3. Select “Manage Remote Controls” from the Remote section of ″Settings” and follow the on screen instructions to complete the unpairing process.
4. Once complete, the remote will be ready to pair again.

NOTE: There will be a touchscreen notification message when unpairing is successful. Repeat the above steps to unpair a second remote.

Media Sources

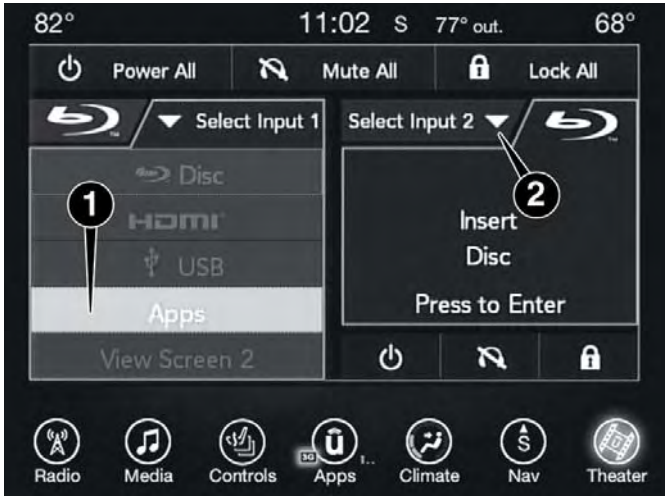

Media Source Selection

1 – Selected Source Screen 1
2 – Screen 2 Source Selection Drop Down

Users can select content for each screen from the front radio touchscreen by choosing desired content from the "Select Input" drop down menu. Options include Blu-Ray Disc, HDMI, USB, Apps, and Viewing the other rear screen.

NOTE: Use the "View Screen" function to pull content from one screen to the other with a single press of a button. Doing this however will disable and gray out certain player controls on the screen viewing the other screen's content.

Uconnect Theater Remote Control

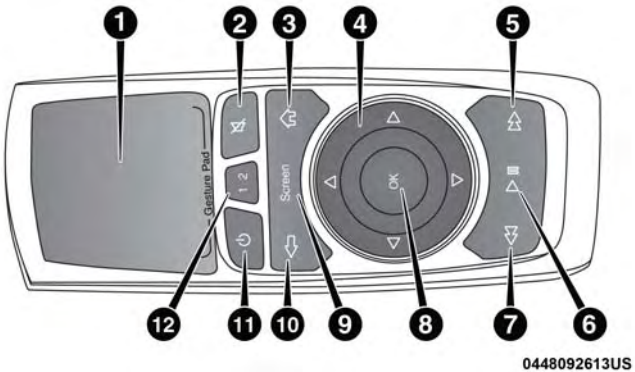

Remote Control

1. **Gesture Pad** — Control pointer position by running your finger over this area and tapping to select items on the touchscreen, functions similar to a computer/laptop mouse.
2. **Mute Button** — Mutes headphone audio.
3. **Home Button** — Push to access available "Sources".
4. **Arrow Buttons** — Push the arrow △▽▷◁ buttons to highlight an item or scroll through menus.
5. **Fast Forward Button** ▷▷ — Push and hold to fast forward through the current audio track or video chapter. Push once to skip to the next track.
6. **Play/Pause Button** ▷‖ — Begin/resume or pause disc play.
7. **Fast Rewind Button** ◁◁ — Push and hold to fast rewind through the current audio track or video chapter. Push once to revert back to the previous track.
8. **OK Button** — Push to select the highlighted option in a menu.
9. **Screen Selector Button** — Push the screen selector to toggle between screen 1 (Driver Side), or screen 2 (Passenger Side).
10. **Back Button** — Push to exit out of menus or return to previous screen.
11. **Power Button** — Turns the screen for the selected channel on or off.
12. **Screen Indicator** — Indicates which screen (1 or 2) is being controlled by the remote control.

Replacing The Remote Control Batteries

Each remote control requires two AAA batteries for operation.

To replace the batteries:

1. Locate the battery compartment on the back of the remote, then slide the battery cover downward.
2. Remove the old batteries and follow battery recycling procedures for your area.
3. Install new batteries, making sure to orient them according to the polarity diagram shown inside the battery compartment.
4. Replace the battery compartment cover.

Uconnect Theater Home Screen And Controls

Uconnect Theater Home Screen (Rear Touchscreens)

1 — Search Button (Front USB Media Search)
2 — Power Button
3 — Settings Button
4 — Toggle Button List And Icon View
5 — Source Card Page Indicator
6 — Wired Headphone Volume
7 — Rear Climate Control Button
8 — Home Button
9 — Source Cards

Source Card Selection

You can choose sources such as HDMI, USB, Apps, or Blu-ray. You may also view content of the opposite screen in one step by choosing the "View Screen" source card.

NOTE:

- Source card order can be changed by pressing the Settings button on the touchscreen and scrolling down to "Source Card Order".
- Use the "View Screen" function to pull content from one screen to the other in a single press of a button. Doing this however will disable and gray out certain player controls on the screen viewing the other screen's content.

General Settings

To change source card order, select "Source Card Reorder", then press and hold source card on the touchscreen, and drag and drop in desired order.

You can also adjust settings such as:

- Brightness
- Media port lighting on and off
- Clock on and off

NOTE: System information can also be displayed under General Settings.

Remote Settings

Under this setting, you can access the following:

- Manage Remotes (this allows you to unpair remotes)
- Pair Remote
- Remote sensitivity **(this adjusts the speed and sensitivity of cursor on screen when using gesture pad)**

General Information

The following regulatory statement applies to all Radio Frequency (RF) devices equipped in this vehicle:

This device complies with Part 15 of the FCC Rules and with Industry Canada license-exempt RSS standard(s). Operation is subject to the following two conditions:

1. This device may not cause harmful interference, and
2. This device must accept any interference received, including interference that may cause undesired operation.

NOTE: Changes or modifications not expressly approved by the party responsible for compliance could void the user's authority to operate the equipment.

Play A DVD/Blu-ray Or USB Media File From Uconnect System

1. Insert a Blu-ray disc or DVD disc into the disc player with the label facing up, or insert a USB drive into rear Video USB port.

NOTE: The DVD/Blu-ray Disc player and Video USB port are both located under the radio controls in the instrument panel.

2. Press the "Uconnect Theater" button on the radio touchscreen.

Refer to "Accessing The System From The Uconnect System" in this section for further information.

3. Select Disc or USB from the source controls (i.e. select the desired source from the "Select Input 1" or "Select Input 2" menu for the respective screen).
4. For DVD/Blu-ray disc – press the "Press to Enter" feature in the Movie Snapshot on the radio touchscreen, then press "OK" on the following screen. The steps to start a DVD are dependent on the steps required by that specific DVD. For USB Media Files - Press Music, Movie, or Folders, then select media title from list(s).

5. To play a DVD/Blu-ray disc on both screens simultaneously, select "Disc" from both screen drop downs, or choose "Disc Source" on one screen and push the "View Screen" button on the other.

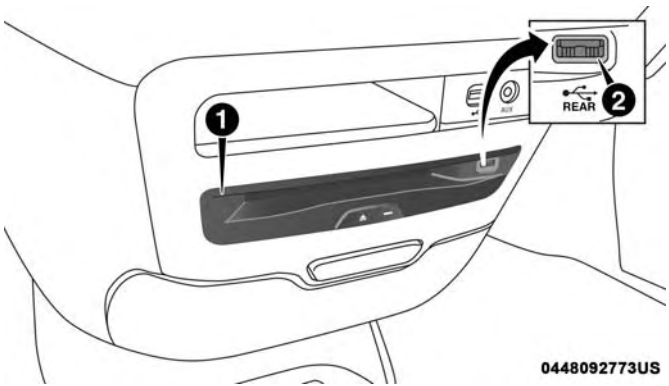

DVD Blu-ray Disc Player

1 — Disc Player (Rear)
2 — Rear Video USB Port

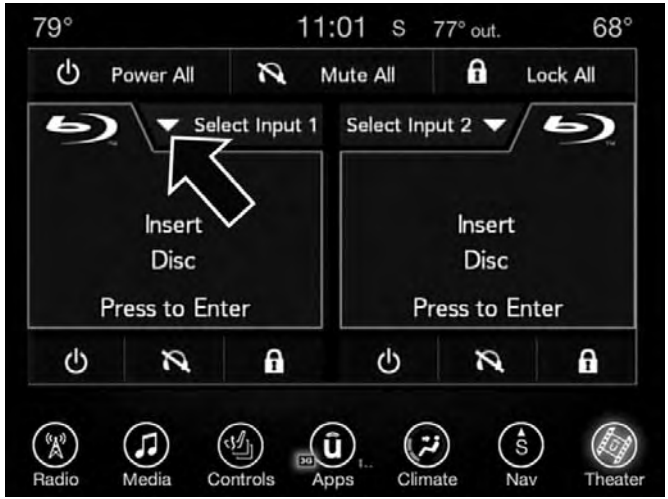

Source Controls From The Uconnect System — Uconnect Theater

Uconnect System Media Control Screen

NOTE: After selecting "Press to Enter" or the Movie Snapshot, the control functions for that screen appears. These controls only apply to the individual screen selected and include:

1. **Power**

Press to turn "Selected Screen" On/Off.

2. **Mute**

Mute rear headphones for selected source for the current ignition cycle. Pressing mute again will unmute rear headphones.

3. **Lock**

Press to enable/disable Remote Control functions and Rear Touchscreen Controls for the selected source.

4. **View**

Select this button to view full screen video if vehicle is not moving. Button is disabled when not viewing a video source or when the vehicle is in motion.

5. **Listen In**

Select this button to play one of the rear screens audio over the vehicle's audio system.

NOTE: To view video content on the radio screen, bring the vehicle to a stop.

Disc Menu

When listening to a CD Audio disc, CD Data disc, DVD or Blu-ray, pushing the remote control's arrow buttons will navigate the cursor on the rear touchscreen in the desired direction, on whichever touchscreen is selected. The UP, DOWN, LEFT, and RIGHT arrow buttons, and the OK and MENU buttons on the remote, along with the corresponding buttons overlaid on the radio touchscreen, can be used to navigate the disc menu when it appears. This can be used to select specific chapters in a movie, navigate special features, or to play the movie from the menu.

NOTE: Inserting a disc into the player will "auto play" the disc if already in the "Disc" source menu on the rear screens, and the disc supports "auto play."

Blu-ray Controls – Disc Specific Functions

The four colored buttons (red, green, blue, yellow) are designed for use with certain Blu-ray disc movie titles to access particular features or software on the disc. See the documentation provided with your Blu-ray disc movie to see if these buttons can be used. The 5-way control buttons located to the right of the four colored buttons, are used to navigate and select items in the disc's menu, like play movie, scene selection, etc.

Rear Touchscreen Blu-ray Controls – Disc Specific Functions

1 — Red Button
2 — Green Button
3 — Blue Button
4 — Yellow Button
5 — 5-Way Control Buttons
6 — Move 5-Way Controls Button

Uconnect Theater Apps

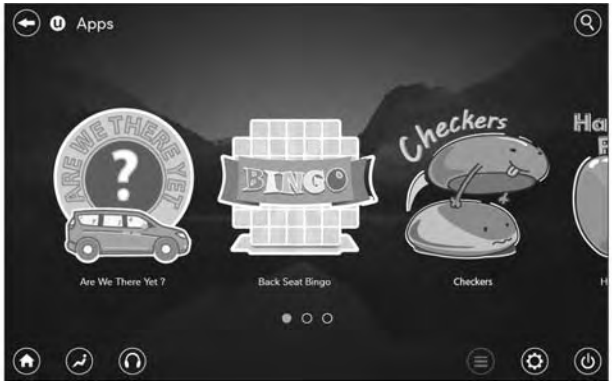

Apps Home Screen

Sudoku App Home Screen

Select the Apps source card to play pre-loaded games. Pressing the "Help" button teaches users how to play each game. Pick from games:

- Back Seat Bingo
- Checkers
- Hanging Fruit
- License Plate Game

- Math Flash Cards
- Solitaire
- Sudoku
- Tic Tac Toe

NOTE: To exit a game, press "Exit Button" then "Back Arrow," or "Home Button" on the touchscreen.

Are We There Yet? — Uconnect 4C NAV

Are We There Yet? App

1 — Decrease Timing Between Notifications Button
2 — Notifications ON/OFF Button
3 — Increase Timing Between Notifications Button
4 — Arrival Time
5 — Time Remaining Until Destination Is Reached
6 — Distance Remaining

When a navigation route has been set from the Uconnect system, the second row passengers can use "Are We There Yet?" for an animated screen showing distance and time remaining on navigation routes, as well as the estimated time of arrival with pop-up notifications. Notifications and

their frequency can be set up for route information by using the arrow buttons, and can be turned on and off using the "Notifications" button on the "Are We There Yet?" App. Estimated time of arrival notifications pop-up at the bottom center of the screen.

Using The Rear Video USB Port

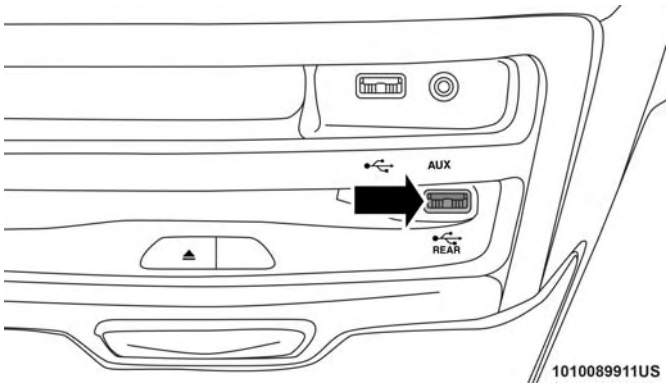

Rear Video USB Port

Plug in a USB drive, iPhone, iPod or mass storage device and play your favorite music or movies.

NOTE: To view USB media on the rear theater screens, insert a USB drive into the port next to the DVD/Blu-ray disc player. The USB drive port is located under the radio controls in the instrument panel.

Search Screen

On the rear screen you can browse the content of the USB device by going to the USB source. Use the search feature to find your music faster.

Play Video Games

Connect the video game console to the HDMI 1 or 2 ports, located behind the first row seat.

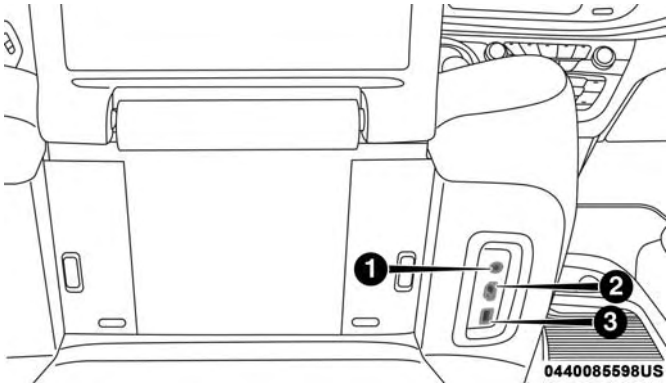

AUX/HDMI/USB

1 — Headphone Jack (Headphone Output Only)
2 — HDMI Port
3 — USB Port (Charge Only)

NOTE: Certain high-end video games will exceed the power limit of the vehicle's Power Inverter. Refer to "Power Inverter" in "Getting To Know Your Vehicle" in this guide for further information.

Headphones Operation

The headphones receive two separate channels of audio using an infrared transmitter from the video screens.

If no audio is heard after increasing the volume control, there are a number of things that can be done to troubleshoot the issue:

- Verify that the screen is turned on.
- Check to see that the channel is not muted.
- Make sure that the headphones are on.
- Verify that the headphone channel selector button is on the desired channel. This button switches between the audio of screen 1 and screen 2.
- Install two new AAA type batteries in the headphones.

Uconnect Theater Headphones

1 — Power ON/OFF Button
2 — Volume Control Wheel
3 — Channel Selector Button

The headphone power indicator and controls are located on the right ear cup.

NOTE: Uconnect Theater must be turned on before sound can be heard from the headphones. To conserve battery life, the headphones will automatically turn off approximately three minutes after the Uconnect Theater system is turned off.

Changing The Audio Mode For Headphones

1. Ensure the remote control and the headphones are on the same channel.
2. Push the Home button on the remote control.
3. When the Home menu appears on the touchscreen, use the arrow buttons on the remote control to navigate to the available modes and push the OK button to select the new mode or use the Gesture Pad at the top of the remote control.

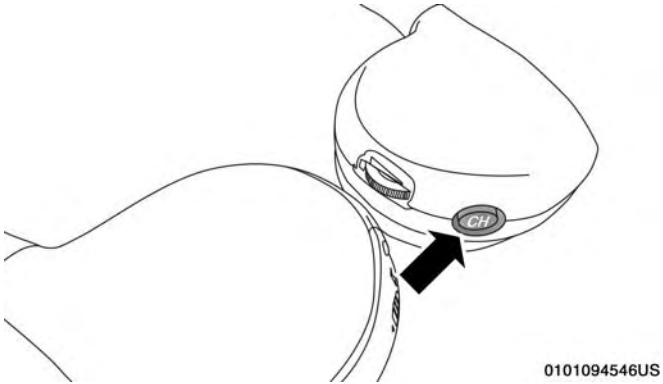

Headphone Channel Selector Button

Replacing The Headphone Batteries

Each set of headphones requires two AAA batteries for operation.

To replace the batteries:

1. Locate the battery compartment on the left ear cup of the headphones, and then slide the battery cover downward.
2. Remove the old batteries and follow battery recycling procedures for your area.
3. Install new batteries, making sure to orient them according to the polarity diagram shown inside the battery compartment.
4. Replace the battery compartment cover.

Stereo Headphone Lifetime Limited Warranty

Who Does This Warranty Cover? This warranty covers the initial user or purchaser (″you″ or ″your″) of this particular Aptiv PLC (“Aptiv”) wireless headphone (″Product″). The warranty is not transferable.

How Long Does the Coverage Last? This warranty lasts as long as you own the Product.

What Does This Warranty Cover? Except as specified below, this warranty covers any Product that in normal use is defective in workmanship or materials.

What Does This Warranty Not Cover? This warranty does not cover any damage or defect that results from misuse, abuse or modification of the Product other than by Aptiv. Foam earpieces, which will wear over time through normal use, are specifically not covered (replacement foam is available for a nominal charge). APTIV IS NOT LIABLE FOR ANY INJURIES OR DAMAGES TO PERSONS OR PROPERTY RESULTING FROM THE USE OF, OR ANY FAILURE OR DEFECT IN, THE PRODUCT, NOR IS APTIV LIABLE FOR ANY GENERAL, SPECIAL, DIRECT, INDIRECT, INCIDENTAL, CONSEQUENTIAL, EXEMPLARY, PUNITIVE OR OTHER DAMAGES OF ANY KIND OR NATURE WHATSOEVER. Some states and jurisdictions may not allow the exclusion or limitation of incidental or consequential damages, so the above limitation may not apply to you. This warranty gives you specific legal rights. You may also have other rights, which vary from jurisdiction to jurisdiction.

What Will Aptiv Do? Aptiv, at its option, will repair or replace any defective Product. Aptiv reserves the right to replace any discontinued Product with a comparable

model. THIS WARRANTY IS THE SOLE WARRANTY FOR THIS PRODUCT, SETS FORTH YOUR EXCLUSIVE REMEDY REGARDING DEFECTIVE PRODUCTS, AND IS IN LIEU OF ALL OTHER WARRANTIES (EXPRESS OR IMPLIED), INCLUDING ANY WARRANTY FOR MERCHANTABILITY OR FITNESS FOR A PARTICULAR PURPOSE.

If you have any questions or comments regarding your Aptiv wireless headphones, or to register your wireless headphones, please phone:

1-248-724-5900

Display Settings

When watching a video source, pressing "Settings" ⚙ icon on the touchscreen activates the Settings menu. These settings control the appearance of the video on the screen. The factory default settings are already set for optimum viewing, so there is no need to change these settings under normal circumstances.

To change the settings, use one of the touchscreens or remote. To reset all values back to the original settings, select "Reset to Defaults", then select "YES."

Listening To Audio With The Screen Closed

To listen to only audio portion of the channel with the screen closed:

- Set the audio to the desired source and channel.
- Close the video screen.
- When the screen is reopened, the video screen will automatically turn back on and show the appropriate display menu or media.

If the screen is closed and there is no audio heard, verify that the headphones are turned on (the ON indicator is illuminated) and the headphone selector switch is on the desired channel. If the headphones are turned on, push the remote control's power button to turn audio on. If audio is still not heard, check that fully charged batteries are installed in the headphones.

Rear Climate Controls

The rear climate controls can also be controlled using the Uconnect Theater system. Refer to “Climate Controls” in “Getting To Know Your Vehicle” for further information.

Rear Climate Controls

Icon	Description
ON	**Climate Control ON Button** Press and release this button to turn the Rear Climate.
OFF	**Climate Control OFF Button** Press and release this button to turn the Climate Controls off.
AUTO	**AUTO Button** Automatically controls the rear interior cabin temperature by adjusting airflow distribution and amount. Toggling this function will cause the system to switch between manual mode and automatic modes. Refer to “Automatic Operation” in ″Getting To Know Your Vehicle” for more information.

Icon	Description
	Rear Passenger Temperature Up and Down Buttons Provides the rear passengers with independent temperature control. Press the button on the touchscreen to increase or decrease the temperature. The temperature will get warmer as you move up toward the red arrow and colder as you move down toward the blue arrow.
Headliner Mode	**Headliner Mode** Air comes from the outlets in the headliner. Each of these outlets can be individually adjusted to direct the flow of air. Moving the air vanes of the outlets to one side will shut off the airflow.
Bi-Level Mode	**Bi-Level Mode** Air comes from both the headliner outlets and the floor outlets. **NOTE:** In many temperature positions, the Bi-Level mode is designed to provide cooler air out of the headliner outlets and warmer air from the floor outlets.
Floor Mode	**Floor Mode** Air comes from the floor outlets.

Icon	Description
	Blower Control Blower Control is used to regulate the amount of air forced through the climate system. There are seven blower speeds available. Adjusting the blower will cause automatic mode to switch to manual operation.

Accessibility — If Equipped

Accessibility is a feature of the DVD/Blu-ray/USB Video system that announces a function prior to performing the action. For further information refer to "Uconnect Settings" in "Multimedia."

Wireless Streaming — If Equipped

Your Uconnect Theater System may be equipped with Wireless Streaming functionality that allows you to project your smartphone or tablet onto your rear Uconnect Theater touchscreens. This Source Card will allow you to wirelessly link your compatible Android devices to your Uconnect Theater system and stream your device onto the touch-screens.

Choose the Wireless Streaming Source Card on your rear Uconnect Theater touchscreen.

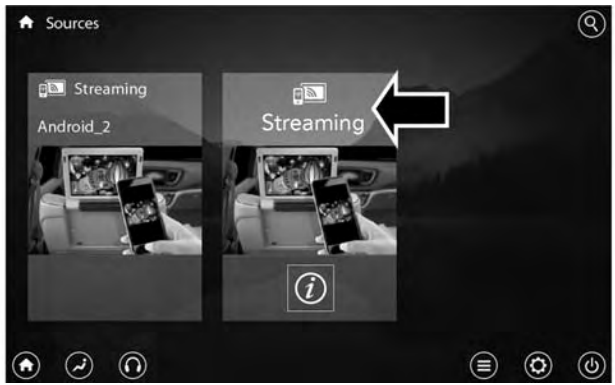

Wireless Streaming Source Card

The first row passengers can also access wireless streaming by choosing the source in the Uconnect Theater menu on the front Uconnect touchscreen.

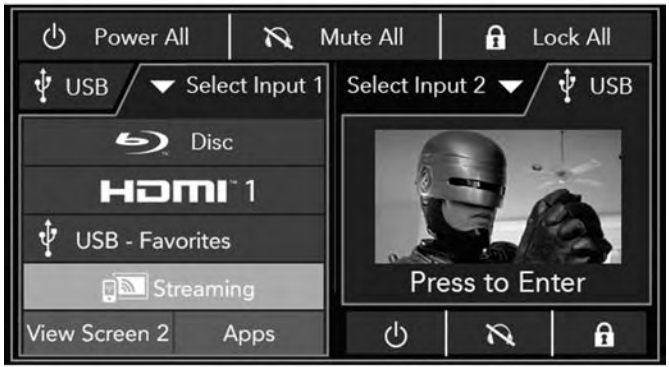

Streaming Source On Front Uconnect Touchscreen

NOTE: For system compatibility, consult your device's Owner's Manual or www.uconnectphone.com to see if your device supports wireless streaming technology compatibility. Apple devices do not support this feature.

To link your device to the rear Uconnect Theater touchscreens:

1. Enable your device's Wi-Fi.
2. Select the Wireless Streaming feature on your device. The name of this feature is device dependent and could include: mirror, cast or smart view.

NOTE: Refer to your device's Owners Manual or www.uconnectphone.com for further information.

3. Select "Pacifica Wireless Network" from the list of available networks on your device.
4. When prompted by an Authentication Screen, press "Accept" on the touchscreen to begin wireless streaming on your device. If prompted, verify that the code on the rear touchscreen and the device match.

Streaming Device Source Card

Your phone will be added as an additional source card on the Uconnect Theater touchscreens.

NOTE: The Authentication Screen will appear on both rear touchscreens. The touchscreen screen on which "Accept" is selected will be the primary controller for the wireless streaming session.

NOTE:

- Some devices will allow you to control your device through the Uconnect Theater rear touchscreens. They will react to your selections from the touchscreen and be represented on your device as well. When supported, the Uconnect Theater task bar will appear at the top and bottom of the Uconnect Theater touchscreen, framing your streaming device.
- Devices that do not support this feature will not respond to Uconnect Theater touchscreen but can still be controlled using the streaming device.

Settings

Below is a list of the settings available for the Wireless Streaming feature of your Uconnect Theater system:

Wireless Streaming Settings

- Wireless: ON/OFF – Turn on and off the wireless feature of the Uconnect Theater system.
- Manage Devices – Allows the user to delete the paired devices.
- Local Network Name – Allows the user to rename the Pacifica Wireless Network.

Refer to the Wireless Streaming video on the Uconnect YouTube Channel at www.youtube.com/DriveUconnect for tips and additional information on the Wireless Streaming function.

BD And DVD Region Codes

Many BD and DVD discs are coded by geographic region. These region codes must match in order for the disc to play. If the region code for the BD or DVD disc does not match the region code for the Blu-ray Disc player, the disc will not play. USA and Canada are set for BD : code A / DVD : code 1.

Recorded Discs

The Blu-ray Disc player will play CD-R and CD-RW discs recorded in CD-Audio or Video-CD format, or as a CD-ROM containing MP3, AAC or WMA files. The player will also play DVD-Video content recorded to a DVD-R or DVD-RW disc. DVD-ROM discs (either pressed or recorded) are not supported. Compressed audio and DivX recorded on DVD is playable.

If you record a disc using a personal computer, there may be cases where the Blu-ray Disc player may not be able to play some or the entire disc, even if it is recorded in a compatible format and is playable on other players. To help avoid playback problems, use the following guidelines when recording discs.

- Open sessions are ignored. Only sessions that are closed are playable.
- For multi-session CDs that contain only multiple CD-Audio sessions, the player will renumber the tracks so each track number is unique.
- For CD Data (or CD-ROM) discs, always use the ISO-9660 (Level 1 or Level 2), Joliet, or Romeo format. Other formats (such as HFS, or others) are not supported.
- The player recognizes a maximum of 2000 files and 255 folders (includes the ROOT folder) per CD-R and CD-RW disc.
- Mixed media recordable DVD formats will only play the Video_TS portion of the disc.

If you are still having trouble writing a disc that is playable in the Blu-ray Disc player, check with the disc recording software publisher for more information about burning playable discs.

The recommended method for labeling recordable discs (CD-R, CD-RW, and DVD-R) is with a permanent marker.

Do not use adhesive labels as they may separate from the disc, become stuck, and cause permanent damage to the DVD player.

Compressed Audio Files (MP3, WMA and AAC)

The Blu-ray Disc player is capable of playing MP3 (MPEG-1 Audio Layer 3), WMA (Windows Media Audio) files and AAC (Advanced Audio Coding) from a CD Data disc (usually a CD-R or CD-RW) or DVD Data disc (usually a DVD-R or DVD-RW).

- The Blu-ray Disc player always uses the file extension to determine the audio format, so MP3 files must always end with the extension ".mp3" or ".MP3" and WMA files must always end with the extension ".wma" or ".WMA" and AAC files must always end with the extension and ".aac" or ".AAC" or "m4a". To prevent incorrect playback, do not use these extensions for any other types of files.
- For MP3 files, ID3v1, ID3v2 tag data (such as artist name, track title, album, etc.) are supported.
- Any file that is copy protected (such as those downloaded from many online music stores) will not play. The Blu-ray player will automatically skip the file and begin playing the next available file.
- Other compression formats such as MP3 Pro, Ogg Vorbis, and ATRAC3 will not play. The Blu-ray player will automatically skip the file and begin playing the next available file.
- If you are creating your own files, the recommended fixed bit rate for MP3 files is between 32 and 320Kbps and the recommended fixed bit rate for WMA files is between 16 and 192Kbps. Variable bit rates are also supported. For both formats, the recommended sample rate is either 44.1kHz or 48kHz.
- To change the current file, use the remote control "Seek Forward" or "Seek Back" buttons to return to the start of the current or previous file.
- AAC (MPEG-4 AAC, Low Complexity Profile) support.
- AAC HE v1 (AAC High Efficiency v1 aka. AAC/ MPEG4v2 AAC+) support.
- HE-AAC v1, v2 support.

Disc Errors

If the Blu-ray Disc player is unable to read the disc, a "Disc Error" message is displayed on the rear screen and Radio displays. A dirty, damaged, or incompatible disc format are all potential causes for a "Disc Error" message.

If a disc has a damaged track which results in audible or visible errors that persists for two seconds, the Blu-ray Disc player will attempt to continue playing the disc by skipping forward one to three seconds at a time. If the end of the disc is reached, the Blu-ray Disc player will return to the beginning of the disc and attempt to play the start of the first track.

The Blu-ray Disc player may shut down during extremely hot conditions, such as when the vehicle's interior temperature is above 140° F (60.0° C). When this occurs, the player will display "High Temp" and will shut off the Rear Seat displays until a safe temperature is reached. This shutdown is necessary to protect the optics of the Blu-ray Disc player.

Product Agreement

Open Source Software

The software built into this product, are composed of multiple software components, and there are the copyrights of our company or third parties in each software component. Also, in this product, the following open source software has been installed.

- The licensed software for our company is based on GNU GENERAL PUBLIC LICENSE V2.0 ("GPL").
- The licensed software for our company is based on GNU LESSER GENERAL PUBLIC LICENSE V2.1 ("LGPL").
- The software which has the copyrights of a third party and is distributed as free software.

Please refer the contract details which are disclosed in the following websites, for example, concerning these above software. http://www.gnu.org/licenses/old-licenses/gpl-2.0-standalone.html, http://www.gnu.org/licenses/lgpl-2.1-standalone.html.

You have the right of acquisition, modification, and distribution of the source code of the GPL/LGPL software. These are distributed in the hope that it will be useful by itself. However, including the absence of an implied warranty on the "suitability for a particular purpose" or "merchantability", the warranty of any kind will not be made. You may download Source Code from the indicating URL by the pressed button of "Open Source Software" on the Setup Menu. Also, please refrain from contact about the contents of the source code of open source. The source code of the software in which there are the copyrights of our company or third parties, is not subject to distribution.

kernel 2.6.16.29	FreeType 2 2.2.1	gcc sh4eb 3.4.5	glibc 2.3.5	boot_loader sh-ipl +g 1.00
libgcc_s-3.4.5	bash-3.0-31	busybox 1.00	MAKE DEV 1.1.0	module-init-tools 3.1.0
libtermcap 2.0.8	mtd-utils 20050619	initscripts 8.11.1-1	libstdc+ +3.4.5-10	libiconv 1.11
coreutils 6.9	dosfstools 2.10-3	directfb 1.0.0-rc1	kxml 1.21	binutils-sh4eb 2.16.91.0.2
v2lin 0.1	-	-	-	-

Dolby

Manufactured under license from Dolby Laboratories. Dolby and the double-D symbol are trademarks of Dolby Laboratories.

DTS

For DTS patents, see http://dts.com/patents. Manufactured under license from DTS Licensing Limited. DTS, the Symbol, & DTS and the Symbol together are registered trademarks, and DTS 2.0 Channel is a trademark of DTS, Inc. © DTS, Inc. All Rights Reserved.

DVD

"The DVD logo" is a trademark of DVD Format/Logo Licensing Corporation." or " DVD logo is a trademark of DVD Format/Logo Licensing Corporation registered in the U.S., Japan and other countries."

BDA

"Blu-ray Disc, Blu-ray, BD-Live, BONUSVIEW, AVCREC and the logos are trademarks of the Blu-ray Disc Association."

AVCHD

"AVCHD" and the "AVCHD" logo are trademarks of Panasonic Corporation and Sony Corporation.

BD-J

Java is a registered trademark of Oracle and/or its affiliates.

MPEG

THIS PRODUCT IS LICENSED UNDER THE AVC PATENT PORTFOLIO LICENSE FOR THE PERSONAL AND

NON-COMMERCIAL USE OF A CONSUMER TO (i) ENCODE VIDEO IN COMPLIANCE WITH THE AVC STANDARD ("AVC VIDEO") AND/OR (ii) DECODE AVC VIDEO THAT WAS ENCODED BY A CONSUMER ENGAGED IN A PERSONAL AND NON-COMMERCIAL ACTIVITY AND/OR WAS OBTAINED FROM A VIDEO PROVIDER LICENSED TO PROVIDE AVC VIDEO. NO LICENSE IS GRANTED OR SHALL BE IMPLIED FOR ANY OTHER USE. ADDITIONAL INFORMATION MAY BE OBTAINED FROM MPEG LA, L.L.C. SEE WWW.MPEGLA.COM .

DivX

This DivX Certified device has passed rigorous testing to ensure it plays DivX video. To play purchased DivX movies, first register your device at http://www.divx.com/en/vod. Find your registration code in the DivX VOD section of your device setup menu. DivX, DivX Certified and associated logos are trademarks of DivX, LLC and are used under license.

Cinavia

"Cinavia Notice This product uses Cinavia technology to limit the use of unauthorized copies of some commercially-produced film and videos and their soundtracks. When a prohibited use of an unauthorized copy is detected, a message will be displayed and playback or copying will be interrupted. More information about Cinavia technology is provided at the Cinavia Online Consumer Information Center at http://www.cinavia.com. To request additional information about Cinavia by mail, send a postcard with your mailing address to: Cinavia Consumer Information Center, P.O. Box 86851, San Diego, CA, 92138, USA." "This product incorporates proprietary technology under license from Verance Corporation and is protected by U.S. Patent 7,369,677 and other U.S. and worldwide patents issued and pending as well as copyright and trade secret protection for certain aspects of such technology. Cinavia is a trademark of Verance Corporation. Copyright 2004-2012 Verance Corporation. All rights reserved by Verance. Reverse engineering or disassembly is prohibited.

CAUTION!

Use of controls or adjustments or performance of procedures other than those specified herein may result in hazardous radiation exposure.

General Information

The following regulatory statement applies to all Radio Frequency (RF) devices equipped in this vehicle:

This device complies with Part 15 of the FCC Rules and with Industry Canada license-exempt RSS standard(s). Operation is subject to the following two conditions:

1. This device may not cause harmful interference, and
2. This device must accept any interference received, including interference that may cause undesired operation.

NOTE: Changes or modifications not expressly approved by the party responsible for compliance could void the user's authority to operate the equipment.

FCC/IC Regulatory Notices

Modification Statement

Any changes or modifications not expressly approved by the party responsible for compliance could void the user's authority to operate this equipment.

Interference Statement

This device complies with Part 15 of the FCC Rules and Industry Canada licence-exempt RSS standard(s). Operation is subject to the following two conditions: (1) this device may not cause interference, and (2) this device must accept any interference, including interference that may cause undesired operation of the device.

Wireless Notice

This device complies with FCC/IC radiation exposure limits set forth for an uncontrolled environment and meets the FCC radio frequency (RF) Exposure Guidelines and RSS-102 of the IC radio frequency (RF) Exposure rules. This transmitter must not be co-located or operating in conjunction with any other antenna or transmitter.

FCC Class B Digital Device Notice

This equipment has been tested and found to comply with the limits for a Class B digital device, pursuant to part 15 of the FCC Rules. These limits are designed to provide reasonable protection against harmful interference in a residential installation. This equipment generates, uses and can radiate radio frequency energy and, if not installed and used in accordance with the instructions, may cause harmful interference to radio communications. However, there

is no guarantee that interference will not occur in a particular installation. If this equipment does cause harmful interference to radio or television reception, which can be determined by turning the equipment off and on, the user is encouraged to try to correct the interference by one or more of the following measures:

- Reorient or relocate the receiving antenna.
- Increase the separation between the equipment and receiver.
- Connect the equipment into an outlet on a circuit different from that to which the receiver is connected.
- Consult the dealer or an experienced radio/TV technician for help.

CAN ICES-3 (B) / NMB-3 (B)

This Class B digital apparatus complies with Canadian ICES-003.

RADIO OPERATION AND MOBILE PHONES

Under certain conditions, the mobile phone being on in your vehicle can cause erratic or noisy performance from your radio. This condition may be lessened or eliminated by relocating the mobile phone antenna. This condition is not harmful to the radio. If your radio performance does not satisfactorily "clear" by the repositioning of the antenna, it is recommended that the radio volume be turned down or off during mobile phone operation when not using Uconnect (if equipped).

Regulatory And Safety Information

USA/CANADA

Exposure to Radio Frequency Radiation

The radiated output power of the internal wireless radio is far below the FCC and IC radio frequency exposure limits. Nevertheless, the wireless radio will be used in such a manner that the radio is 8 in (20 cm) or further from the human body.

The internal wireless radio operates within guidelines found in radio frequency safety standards and recommendations, which reflect the consensus of the scientific community.

The radio manufacturer believes the internal wireless radio is safe for use by consumers. The level of energy emitted is far less than the electromagnetic energy emitted by wireless devices such as mobile phones. However, the use of wireless radios may be restricted in some situations or

environments, such as aboard airplanes. If you are unsure of restrictions, you are encouraged to ask for authorization before turning on the wireless radio.

The following regulatory statement applies to all Radio Frequency (RF) devices equipped in this vehicle:

This device complies with Part 15 of the FCC Rules and with Industry Canada license-exempt RSS standard(s). Operation is subject to the following two conditions:

1. This device may not cause harmful interference, and
2. This device must accept any interference received, including interference that may cause undesired operation.

NOTE: Changes or modifications not expressly approved by the party responsible for compliance could void the user's authority to operate the equipment.

NOTE:

- This equipment has been tested and found to comply with the limits for a Class B digital device, pursuant to Part 15 of the FCC Rules. These limits are designed to provide reasonable protection against harmful interference in a residential installation. This equipment generates, uses and can radiate radio frequency energy and, if not installed and used in accordance with the instructions, may cause harmful interference to radio communications. However, there is no guarantee that interference will not occur in a particular installation.
- If this equipment does cause harmful interference to radio or television reception, which can be determined by turning the equipment off and on, the user is encouraged to try to correct the interference by one or more of the following measures:
  1. Increase the separation between the equipment and receiver.
  2. Consult an authorized dealer or an experienced radio technician for help.

UCONNECT VOICE RECOGNITION QUICK TIPS

Introducing Uconnect

Start using Uconnect Voice Recognition with these helpful quick tips. It provides the key Voice Commands and tips you need to know to control your Uconnect system.

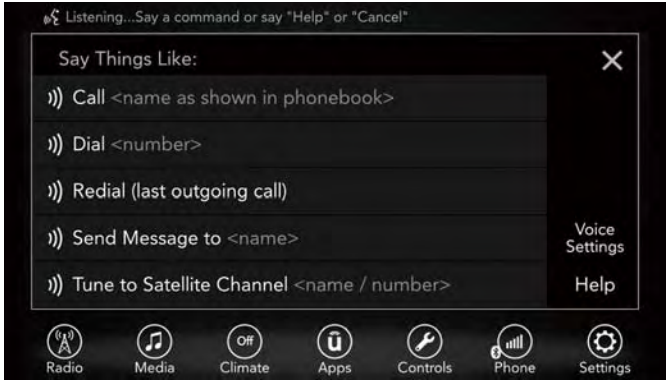

Uconnect 4

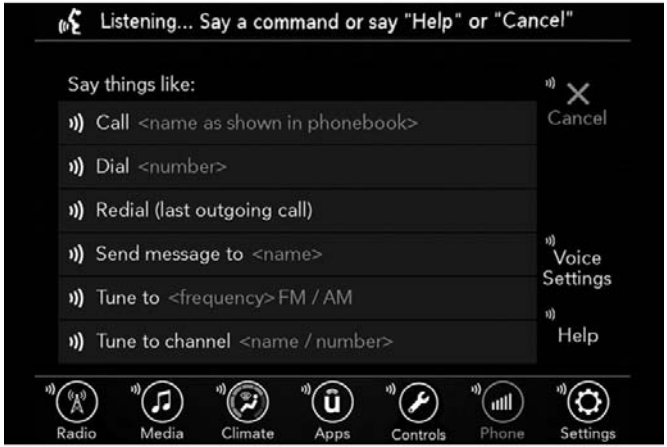

Uconnect 4C NAV

NOTE: If you see the NAV icon on the bottom bar, or in the Apps menus, of your touchscreen, you have the Uconnect 4C NAV system. If not, you have a Uconnect 4C system.

Get Started

All you need to control your Uconnect system with your voice are the buttons on your steering wheel.

Helpful hints for using Voice Recognition:

- Visit UconnectPhone.com to check mobile device and feature compatibility and to find phone pairing instructions.
- Reduce background noise. Wind and passenger conversations are examples of noise that may impact recognition.
- Speak clearly at a normal pace and volume while facing straight ahead. The microphone is positioned on the rearview mirror and aimed at the driver.
- Each time you give a Voice Command, you must first push either the Voice Recognition (VR) or Phone button, wait until **after** the beep, then say your Voice Command.
- You can interrupt the help message or system prompts by pushing the VR or Phone button and saying a Voice Command from the current category.

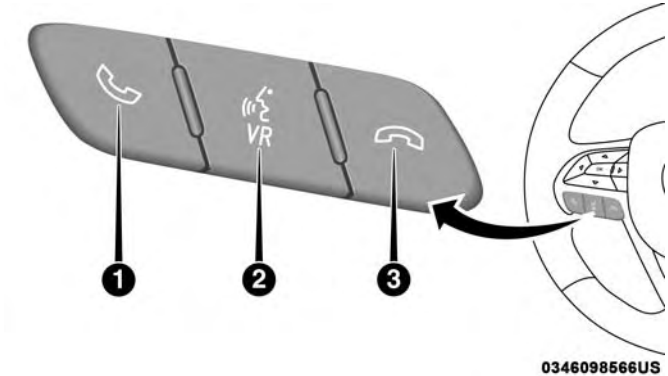

Uconnect Voice Command Buttons

1 — Push To Initiate Or To Answer A Phone Call, Send Or Receive A Text
2 — For All Radios: Push To Begin Radio, Media, Or Climate Functions. For Uconnect 4C NAV System Only: Push To Begin Navigation Function
3 — Push To End Call

Basic Voice Commands

The basic Voice Commands below can be given at any point while using your Uconnect system.

Push the VR button . After the beep, say:

- " **Cancel**" to stop a current voice session
- " **Help**" to hear a list of suggested Voice Commands
- " **Repeat**" to listen to the system prompts again

Notice the visual cues that inform you of your voice recognition system's status. Cues appear on the touch-screen.

Radio

Use your voice to quickly get to the AM, FM or SiriusXM Satellite Radio stations you would like to hear. (Subscription or included SiriusXM Satellite Radio trial required.)

Push the VR button . After the beep, say:

- " **Tune to** ninety-five-point-five FM"
- " **Tune to Satellite Channel** Hits 1"

TIP: At any time, if you are not sure of what to say or want to learn a Voice Command, push the VR button and say, " **Help**." The system provides you with a list of commands.

Uconnect 4 Radio

Uconnect 4C/4C NAV Radio

Media

Uconnect offers connections via USB, Bluetooth and auxiliary ports (if equipped). Voice operation is only available for connected USB and AUX devices.

Push the VR button . After the beep, say one of the following commands and follow the prompts to switch your media source or choose an artist.

- " **Change source to** Bluetooth"
- " **Change source to** AUX"
- " **Change source to** USB"
- " **Play artist** Beethoven"; " **Play album** Greatest Hits"; " **Play song** Moonlight Sonata"; " **Play genre** Classical"

TIP: Press the Browse button on the touchscreen to see all of the music on your USB device. Your Voice Command must match **exactly** how the artist, album, song and genre information is displayed.

Uconnect 4 Media

Uconnect 4C/4C NAV Media

Phone

Making and answering hands-free phone calls is easy with Uconnect. When the Phonebook button is illuminated on your touchscreen, your system is ready. Check UconnectPhone.com for mobile phone compatibility and pairing instructions.

Push the Phone button . After the beep, say one of the following commands:

- " **Call** John Smith"
- " **Dial** 123-456-7890 and follow the system prompts"
- " **Redial** (call previous outgoing phone number)"
- " **Call back** (call previous incoming phone number)"

TIP: When providing a Voice Command, push the Phone button and say " **Call**," then pronounce the name **exactly** as it appears in your phone book. When a contact has multiple phone numbers, you can say " **Call** John Smith **work**."

Uconnect 4 Phone

Uconnect 4C/4C NAV Phone

Voice Text Reply

Uconnect announces **incoming** text messages. Push the Phone button and say " **Listen**." (Must have compatible mobile phone paired to Uconnect system.)

1. Once an incoming text message is read to you, push the Phone button . After the beep, say: " **Reply**."

2. Listen to the Uconnect prompts. After the beep, repeat one of the pre-defined messages and follow the system prompts.

PRE-DEFINED VOICE TEXT REPLY RESPONSES		
Yes.	Stuck in traffic.	See you later.
No.	Start without me.	I'll be late.
Okay.	Where are you?	I will be <number> minutes late.
Call me.	Are you there yet?	
I'll call you later.	I need directions.	See you in <number> of minutes.
I'm on my way.	Can't talk right now.	
I'm lost.		Thanks.

TIP: Your mobile phone must have the full implementation of the **Message Access Profile (MAP)** to take advantage of this feature. For details about MAP, visit UconnectPhone.com.

Apple iPhone iOS 6 or later supports reading **incoming** text messages only. To enable this feature on your Apple iPhone, follow these four simple steps:

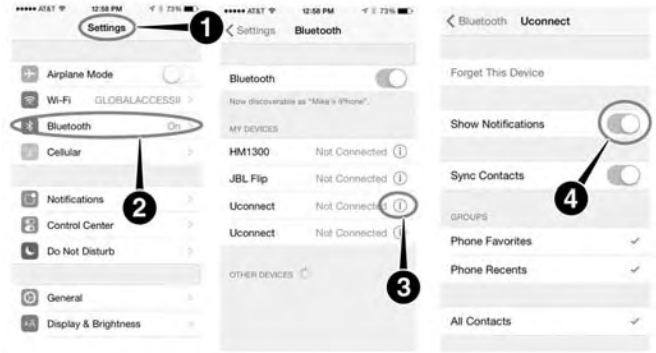

iPhone Notification Settings

1 — Select "Settings"
2 — Select "Bluetooth"
3 — Select The (i) For The Paired Vehicle
4 — Turn On "Show Notifications"

TIP: Voice Text Reply is not compatible with iPhone, but if your vehicle is equipped with Siri Eyes Free, you can use your voice to send a text message.

Climate

Too hot? Too cold? Adjust vehicle temperatures hands-free and keep everyone comfortable while you keep moving ahead. (If vehicle is equipped with climate control.)

Push the VR button . After the beep, say one of the following commands:

- " **Set driver temperature to** 70 **degrees**"
- " **Set passenger temperature to** 70 **degrees**"

TIP: Voice Command for Climate may only be used to adjust the interior temperature of your vehicle. Voice Command will not work to adjust the heated seats or steering wheel if equipped.

Uconnect 4 Climate

Uconnect 4C/4C NAV Climate

Navigation (4C NAV)

The Uconnect navigation feature helps you save time and become more productive when you know exactly how to get to where you want to go.

1. To enter a destination, push the VR button . After the beep, say: " **Find address** 800 Chrysler Drive Auburn Hills, Michigan."
2. Then follow the system prompts.

TIP: To start a POI search, push the VR button . After the beep, say: " **Find nearest** coffee shop."

Uconnect 4C NAV With 8.4–inch Display Navigation

SiriusXM Guardian (4C/4C NAV) — If Equipped

CAUTION!

Some SiriusXM Guardian services, including SOS Call and Roadside Assistance Call will NOT work without an operable LTE (voice/data) or 3G or 4G (data) network connection compatible with your device.

NOTE: Your vehicle may be transmitting data as authorized by the subscriber.

An included trial and/or subscription is required to take advantage of the SiriusXM Guardian services in the next section of this guide. To register with SiriusXM Guardian, press the Apps button on the Uconnect 4C/4C NAV touchscreen to get started.

NOTE: SiriusXM Guardian is available only on equipped vehicles purchased within the continental United States, Alaska, Hawaii and Canada. Services can only be used where coverage is available; see coverage map for details.

SOS Call

Theft Alarm Notification

Remote Door Lock/Unlock

Send & Go

Vehicle Finder

Stolen Vehicle Assistance

Remote Vehicle Start**

Remote Horn & Lights

Roadside Assistance Call

Vehicle Health Reports**

Vehicle Health Alert**

Performance Pages Plus**

**If vehicle is equipped.

Register (4C/4C NAV)

To unlock the full potential of SiriusXM Guardian in your vehicle, you must activate your SiriusXM Guardian services.

1. Press the Apps icon on the bottom of your in-vehicle touchscreen.
2. Select the Activate Services icon from your list of apps.

3. Select “Customer Care” to speak with a SiriusXM Guardian Customer Care agent who will activate services in your vehicle, or select “Enter Email” to activate on the web.

- U.S. residents visit: www.siriusxm.com/guardian.
- Canadian residents visit: www.siriusxm.ca/guardian.

Vehicle Health Report/Alert (4C/4C NAV)

Your vehicle will send you a monthly email report, which summarizes the performance of your vehicle’s key systems so you can stay on top of your vehicle’s maintenance needs if you are registered for SiriusXM Guardian. Your vehicle will also send you Vehicle Health Alerts when it detects issues with its key systems that need your attention. For further information, refer to your Uconnect Owner’s Manual Supplement.

Mobile App (4C/4C NAV)

You’re only a few steps away from using remote commands and sending a destination from your phone to your vehicle.

Mobile App

To use the Uconnect Mobile App:

- Once you have registered your SiriusXM Guardian services, download the Uconnect App to your mobile device. Use your Owner Account login and password to open the app.

- Once on the "Remote" screen, you can begin using Remote Door Lock/Unlock, Remote Vehicle Start, and activate your horn and lights remotely, if equipped.
- Press the "Location" button on the bottom menu bar of the app to bring up a map to locate your vehicle or send a location to your Uconnect Navigation using Vehicle Finder and Send & Go , if equipped.
- Press the "Settings" side menu in the upper left corner of the app to bring up app settings.

NOTE: For further information please visit DriveUconnect.com (U.S. Residents) or DriveUconnect.ca (Canadian Residents).

SiriusXM Travel Link (4C NAV)

Need to find a gas station, view local movie listings, check a sports score or the 5 - day weather forecast? SiriusXM Travel Link is a suite of services that brings a wealth of information right to your Uconnect 4C NAV system.

Push the VR button . After the beep, say one of the following commands:

- " **Show fuel prices**"
- " **Show 5 - day weather forecast**"
- " **Show extended weather**"

TIP: Traffic alerts are not accessible with Voice Command.

SiriusXM Travel Link

Siri Eyes Free — If Equipped

Siri lets you use your voice to send text messages, select media, place phone calls and much more. Siri uses your natural language to understand what you mean and responds back to confirm your requests. The system is

designed to keep your eyes on the road and your hands on the wheel by letting Siri help you perform useful tasks.

To enable Siri, push and hold, then release the Uconnect Voice Recognition (VR) button on the steering wheel. After you hear a double beep you can ask Siri to play podcasts and music, get directions, read text messages and many other useful requests.

Uconnect 4 Siri Eyes Free Available

Uconnect 4C/4C NAV With 8.4–inch Siri Eyes Free Available

Using Do Not Disturb

With Do Not Disturb, you can disable notifications from incoming calls and texts, allowing you to keep your eyes on the road and hands on the wheel. For your convenience, there is a counter display to keep track of your missed calls and text messages while you were using Do Not Disturb.

Do Not Disturb can automatically reply with a text message, a call or both, when declining an incoming call and send it to voicemail.

Automatic reply messages can be:

- "I am driving right now, I will get back to you shortly."
- Create a custom auto reply message up to 160 characters.

While in Do Not Disturb, Conference Call can be selected so you can still place a second call without being interrupted by incoming calls.

NOTE:

- Only the beginning of your custom message will be seen on the touchscreen.
- Reply with text message is not compatible with iPhones.
- Auto reply with text message is only available on phones that supporting Bluetooth MAP.

Android Auto — If Equipped

NOTE: Feature availability depends on your carrier and mobile phone manufacturer. Some Android Auto features may or may not be available in every region and/or language.

Android Auto allows you to use your voice to interact with Android's best-in-class speech technology through your vehicle's voice recognition system, and use your smartphone's data plan to project your Android powered smartphone and a number of its apps onto your Uconnect touchscreen. Connect your Android 5.0 (Lollipop), or higher, to one of the media USB ports, using the factory-provided USB cable, and press the new Android Auto icon that replaces your "Phone" icon on the main menu bar to begin Android Auto. Push and hold the VR button on the steering wheel, or press and hold the "Microphone" icon within Android Auto, to activate Android's VR, which

recognizes natural voice commands, to use a list of your smartphone's features:

- Maps
- Music
- Phone
- Text Messages
- Additional Apps

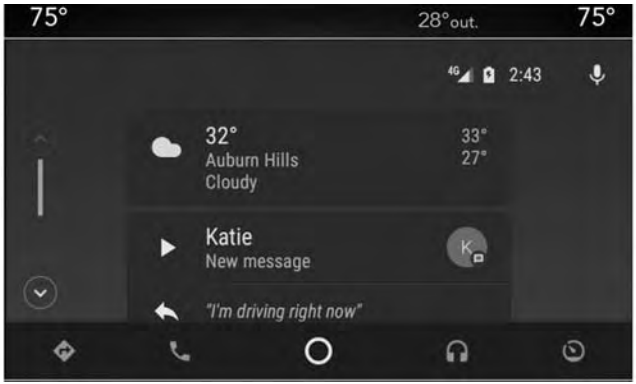

Android Auto On 7-inch Display

Android Auto On 8.4-inch Display

Refer to your Uconnect Owner's Manual Supplement for further information.

NOTE: Requires compatible smartphone running Android™ 5.0 Lollipop or higher and download app on Google Play. Android, Android Auto, and Google Play are trademarks of Google Inc.

Apple CarPlay — If Equipped

NOTE: Feature availability depends on your carrier and mobile phone manufacturer. Some Apple CarPlay features may or may not be available in every region and/or language.

Apple CarPlay allows you to use your voice to interact with Siri through your vehicle's voice recognition system, and use your smartphone's data plan to project your iPhone and a number of its apps onto your Uconnect touchscreen. Connect your iPhone 5, or higher, to one of the media USB ports, using the factory-provided Lightning cable, and press the new CarPlay icon that replaces your "Phone" icon on the main menu bar to begin Apple CarPlay. Press and hold the VR button on the steering wheel, or press and hold the "Home" button within Apple CarPlay, to activate Siri, which recognizes natural voice commands to use a list of your iPhone's features:

- Phone
- Music
- Messages
- Maps
- Additional Apps

Apple CarPlay On 7-inch Display

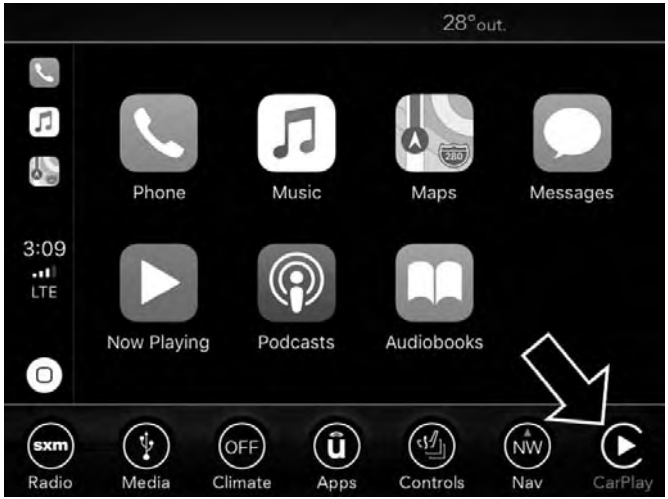

Apple CarPlay On 8.4-inch Display

Refer to your Uconnect Owner's Manual Supplement for further information.

NOTE: Requires compatible iPhone. See dealer for phone compatibility. Data plan rates apply. Vehicle user interface is a product of Apple®. Apple CarPlay is a trademark of Apple Inc. iPhone is a trademark of Apple Inc., registered in the US and other countries. Apple terms of use and privacy statements apply.

General Information

The following regulatory statement applies to all Radio Frequency (RF) devices equipped in this vehicle:

This device complies with Part 15 of the FCC Rules and with Industry Canada license-exempt RSS standard(s). Operation is subject to the following two conditions:

1. This device may not cause harmful interference, and
2. This device must accept any interference received, including interference that may cause undesired operation.

NOTE: Changes or modifications not expressly approved by the party responsible for compliance could void the user's authority to operate the equipment.

Additional Information

© 2018 FCA US LLC. All rights reserved. Mopar and Uconnect are registered trademarks and Mopar Owner Connect is a trademark of FCA US LLC. Android is a trademark of Google Inc. SiriusXM and all related marks and logos are trademarks of SiriusXM Radio Inc.

Uconnect System Support:

- U.S. residents visit www.DriveUconnect.com or call: 1-877-855-8400(24 hours a day 7 days a week)
- Canadian residents visit www.DriveUconnect.ca or call: 1-800-465-2001(English) or 1-800-387-9983(French)

SiriusXM Guardian services support:

- U.S. residents visit www.siriusxm.com/guardian or call: 1-844-796-4827
- Canadian residents visit www.siriusxm.ca/guardian or call: 1-877-324-9091

CD/DVD DISC MAINTENANCE

To keep a CD/DVD in good condition, take the following precautions:

1. Handle the disc by its edge; avoid touching the surface.
2. If the disc is stained, clean the surface with a soft cloth, wiping from center to edge.
3. Do not apply paper or tape to the disc; avoid scratching the disc.
4. Do not use solvents such as benzene, thinner, cleaners, or anti-static sprays.
5. Store the disc in its case after playing.
6. Do not expose the disc to direct sunlight.
7. Do not store the disc where temperatures may become too high.

NOTE: If you experience difficulty in playing a particular disc, it may be damaged (e.g., scratched, reflective coating removed, a hair, moisture or dew on the disc), oversized, or have protection encoding. Try a known good disc before considering disc player service.

CUSTOMER ASSISTANCE

CONTENTS

■ SUGGESTIONS FOR OBTAINING SERVICE FOR YOUR VEHICLE 694
- □ Prepare For The Appointment 694
- □ Prepare A List 694
- □ Be Reasonable With Requests 694

■ IF YOU NEED ASSISTANCE 694
- □ FCA US LLC Customer Center 695
- □ FCA Canada Inc. Customer Center. 695
- □ In Mexico Contact 695
- □ Puerto Rico And U.S. Virgin Islands. 695
- □ Customer Assistance For The Hearing Or Speech Impaired (TDD/TTY) 695
- □ Service Contract 696

■ WARRANTY INFORMATION 697

■ MOPAR PARTS 697

■ REPORTING SAFETY DEFECTS 697
- □ In The 50 United States And Washington, D.C. . .697
- □ In Canada 697

■ PUBLICATION ORDER FORMS 698

SUGGESTIONS FOR OBTAINING SERVICE FOR YOUR VEHICLE

Prepare For The Appointment

If you are having warranty work done, be sure to have the right papers with you. Take your warranty folder. All work to be performed may not be covered by the warranty. Discuss additional charges with the service manager. Keep a maintenance log of your vehicle's service history. This can often provide a clue to the current problem.

Prepare A List

Make a written list of your vehicle's problems or the specific work you want done. If you've had an accident or work done that is not on your maintenance log, let the service advisor know.

Be Reasonable With Requests

If you list a number of items and you must have your vehicle by the end of the day, discuss the situation with the service advisor and list the items in order of priority. At many authorized dealers, you may obtain a rental vehicle at a minimal daily charge. If you need a rental, it is advisable to make these arrangements when you call for an appointment.

IF YOU NEED ASSISTANCE

The manufacturer and its authorized dealer are vitally interested in your satisfaction. We want you to be happy with our products and services.

Warranty service must be done by an authorized dealer. We strongly recommend that you take the vehicle to an authorized dealer. They know your vehicle the best, and are most concerned that you get prompt and high quality service. The manufacturer's authorized dealer have the facilities, factory-trained technicians, special tools, and the latest information to ensure the vehicle is fixed correctly and in a timely manner.

This is why you should always talk to an authorized dealer service manager first. Most matters can be resolved with this process.

- If for some reason you are still not satisfied, talk to the general manager or owner of the authorized dealer. They want to know if you need assistance.
- If an authorized dealer is unable to resolve the concern, you may contact the manufacturer's customer center.

Any communication to the manufacturer's customer center should include the following information:

- Owner's name and address
- Owner's telephone number (home and office)
- Authorized dealer name
- Vehicle Identification Number (VIN)
- Vehicle delivery date and mileage

FCA US LLC Customer Center

P.O. Box 21–8004

Auburn Hills, MI 48321–8004

Phone: (800) 247-9753

FCA Canada Inc. Customer Center

P.O. Box 1621

Windsor, Ontario N9A 4H6

Phone: (800) 465-2001 English / (800) 387-9983 French

In Mexico Contact

Av. Prolongacion Paseo de la Reforma, 1240

Sante Fe C.P. 05109

Mexico, D. F.

In Mexico City: 800-505-1300

Outside Mexico City: +(52)55 50817568

Puerto Rico And U.S. Virgin Islands

FCA Caribbean LLC

P.O. Box 191857

San Juan 00919-1857

Phone: (800) 247-9753

Fax: (787) 782-3345

Customer Assistance For The Hearing Or Speech Impaired (TDD/TTY)

To assist customers who have hearing difficulties, the manufacturer has installed special TDD (Telecommunication Devices for the Deaf) equipment at its customer center. Any hearing or speech impaired customer, who has access

to a TDD or a conventional teletypewriter (TTY) in the United States, can communicate with the manufacturer by dialing 1-800-380-CHRY.

Canadian residents with hearing difficulties that require assistance can use the special needs relay service offered by Bell Canada. For TTY teletypewriter users, dial 711 and for Voice callers, dial 1-800-855-0511 to connect with a Bell Relay Service operator.

Service Contract

You may have purchased a service contract for a vehicle to help protect you from the high cost of unexpected repairs after the manufacturer's New Vehicle Limited Warranty expires. The manufacturer stands behind only the manufacturer's service contracts. If you purchased a manufacturer's service contract, you will receive Plan Provisions and an Owner Identification Card in the mail within three weeks of the vehicle delivery date. If you have any questions about the service contract, call the manufacturer's Service Contract National Customer Hotline at 1-800-521-9922 (Canadian residents, call (800) 465-2001 English / (800) 387-9983 French).

The manufacturer will not stand behind any service contract that is not the manufacturer's service contract. It is not responsible for any service contract other than the manufacturer's service contract. If you purchased a service contract that is not a manufacturer's service contract, and you require service after the manufacturer's New Vehicle Limited Warranty expires, please refer to the contract documents, and contact the person listed in those documents.

We appreciate that you have made a major investment when you purchased the vehicle. An authorized dealer has also made a major investment in facilities, tools, and training to assure that you are absolutely delighted with the ownership experience. You will be pleased with their sincere efforts to resolve any warranty issues or related concerns.

WARNING!

Engine exhaust (internal combustion engines only), some of its constituents, and certain vehicle components contain, or emit, chemicals known to the State of California to cause cancer and birth defects, or other reproductive harm. In addition, certain fluids contained in vehicles and certain products of component wear contain, or emit, chemicals known to the State of

(Continued)

WARNING! ***(Continued)***

California to cause cancer and birth defects, or other reproductive harm.

WARRANTY INFORMATION

See the Warranty Information Booklet for the terms and provisions of FCA US LLC warranties applicable to this vehicle and market.

MOPAR PARTS

Mopar fluids, lubricants, parts, and accessories are available from an authorized dealer. They are recommended for your vehicle in order to help keep the vehicle operating at its best.

REPORTING SAFETY DEFECTS

In The 50 United States And Washington, D.C.

If you believe that your vehicle has a defect that could cause a crash or cause injury or death, you should immediately inform the National Highway Traffic Safety Administration (NHTSA) in addition to notifying FCA US LLC.

If NHTSA receives similar complaints, it may open an investigation, and if it finds that a safety defect exists in a group of vehicles, it may order a recall and remedy campaign. However, NHTSA cannot become involved in individual problems between you, an authorized dealer or FCA US LLC.

To contact NHTSA, you may call the Vehicle Safety Hotline toll free at 1-888-327-4236 (TTY: 1-800-424-9153); or go to http://www.safercar.gov; or write to: Administrator, NHTSA, 1200 New Jersey Avenue, SE., West Building, Washington, D.C. 20590. You can also obtain other information about motor vehicle safety from http://www.safercar.gov.

In Canada

If you believe that your vehicle has a safety defect, you should contact the Customer Service Department immediately. Canadian customers who wish to report a safety defect to the Canadian government should contact Transport Canada, Motor Vehicle Defect Investigations and Recalls at 1-800-333-0510 or go to http://www.tc.gc.ca/roadsafety/.

PUBLICATION ORDER FORMS

To order the following manuals, you may use either the website or the phone numbers listed below.

Service Manuals

These comprehensive Service Manuals provide the information that students and professional technicians need in diagnosing/troubleshooting, problem solving, maintaining, servicing, and repairing FCA US LLC vehicles. A complete working knowledge of the vehicle, system, and/or components is written in straightforward language with illustrations, diagrams, and charts.

Diagnostic Procedure Manuals

Diagnostic Procedure Manuals are filled with diagrams, charts and detailed illustrations. These practical manuals make it easy for students and technicians to find and fix problems on computer-controlled vehicle systems and features. They show exactly how to find and correct problems the first time, using step-by-step troubleshooting and drivability procedures, proven diagnostic tests and a complete list of all tools and equipment.

Owner's Manuals

These Owner's Manuals have been prepared with the assistance of service and engineering specialists to acquaint you with specific FCA US LLC vehicles. Included are starting, operating, emergency and maintenance procedures as well as specifications, capabilities and safety tips.

Call toll free at:

- **1-800-890-4038 (U.S.)**
- **1-800-387-1143 (Canada)**

Or

Visit us on the Worldwide Web at:

- www.techauthority.com (U.S.)

INDEX

About Your Brakes 570
Adaptive Cruise Control (ACC) (Cruise Control) 348
Adding Engine Coolant (Antifreeze) 532
Additives, Fuel 573
Adjust
  Down 74
  Forward 74
  Rearward 74
  Up 74
Air Bag 265
  Air Bag Operation 267
  Air Bag Warning Light 263, 268
  Driver Knee Air Bag 275
  Enhanced Accident Response 280, 505
  Event Data Recorder (EDR) 506
  Front Air Bag 268
  If Deployment Occurs 279
  Knee Impact Bolsters 274
  Maintaining Your Air Bag System 282
  Maintenance 282
  Redundant Air Bag Warning Light 264
  Side Air Bags 275
  Transporting Pets 311
Air Bag Light. 205, 263, 313
Air Cleaner, Engine (Engine Air Cleaner Filter). 518
Air Conditioner Maintenance 520
Air Conditioner Refrigerant 520
Air Conditioner System 520
Air Conditioning Filter 137, 521
Air Conditioning, Operating Tips 136
Air Filter 518
Air Pressure
  Tires 549
Alarm
  Arm The System 35
  Disarm The System 35
  Security Alarm 209
Alterations/Modifications
  Vehicle 5
Android Auto 688
Antifreeze (Engine Coolant) 531, 576
  Disposal 534
Anti-Lock Brake System (ABS) 220
Anti-Lock Warning Light 209
Apple CarPlay 690
Ashtray 179
Assist, Hill Start 227
Audio Jack 640
Audio Systems (Radio). 584
Automatic Dimming Mirror 92

Automatic Headlights 99
Automatic Temperature Control (ATC) 135
Automatic Transaxle 333
Automatic Transmission 335
Adding Fluid 537, 579
Fluid And Filter Change 537
Fluid Change 537
Fluid Level Check 536, 537
Fluid Type 536, 579
Special Additives 537
AUX Cord 640
Auxiliary Electrical Outlet (Power Outlet) 174
Axle Lubrication 579

Back-Up Camera 416
Battery 207, 515
Charging System Light 207
Jump Starting 495
Keyless Key Fob Replacement 24
Battery Saver Feature 101
Belts, Seat 312
Blind Spot Monitoring 229
Body Mechanism Lubrication 523
B-Pillar Location 544
Brake Assist System 222
Brake Control System, Electronic 221
Brake Fluid 579
Brake System 535, 570
Anti-Lock (ABS) 570
Fluid Check 535, 579
Master Cylinder 535
Parking 328
Warning Light 205
Brake/Transmission Interlock 334
Brightness, Interior Lights 103
Bulb Replacement 449, 453
Bulbs, Light 315, 449, 453

Camera 416
Camera, Rear 416, 419
Capacities, Fluid 576
Caps, Filler
Fuel 422, 499
Oil (Engine) 513
Radiator (Coolant Pressure) 533
Carbon Monoxide Warning 312, 576
Cargo
Vehicle Loading 152
Cargo Area Cover 152

Cargo Compartment
Luggage Carrier 180
Cargo Load Floor 152
Cargo Tie-Downs. 152
Car Washes. 564
Cellular Phone 673
Center High Mounted Stop Light 455
Certification Label 424
Chains, Tire 559
Change Oil Indicator 194
Changing A Flat Tire 466, 538
Charging
Wireless 177
Chart, Tire Sizing. 540
Check Engine Light (Malfunction Indicator Light). . . .217
Checking Your Vehicle For Safety 311
Checks, Safety 311
Child Restraint 283
Child Restraints
Booster Seats 287
Center Seat LATCH 298
Child Seat Installation 301, 305
How To Stow An unused ALR Seat Belt 300
Infant And Child Restraints 285
Lower Anchors And Tethers For Children 289
Older Children And Child Restraints 286
Seating Positions 288
Using The Top Tether Anchorage 307
Cigar Lighter 179
Clean Air Gasoline 573
Cleaning
Wheels 558
Climate Control. 108
Automatic 121, 122
Manual 108
Rear 118, 131
Coat Hook 173
Cold Weather Operation. 326
Compact Disc (CD) Maintenance. 692
Compact Spare Tire 556
Computer, Trip/Travel 204
Contract, Service 696
Cooling Pressure Cap (Radiator Cap) 533
Cooling System 530
Adding Coolant (Antifreeze) 532
Coolant Level 534
Cooling Capacity 576
Disposal Of Used Coolant 534
Drain, Flush, And Refill 531
Inspection 531, 534

Points To Remember 534
Pressure Cap 533
Radiator Cap 533
Selection Of Coolant (Antifreeze) 531, 576, 577
Corrosion Protection 563
Cruise Control (Speed Control) 348
Cruise Light 214, 215
Customer Assistance 694
Cybersecurity 585

Daytime Brightness, Interior Lights 104
Daytime Running Lights 97
Dealer Service 516
Defroster, Windshield. 313
Delay (Intermittent) Wipers 105
Diagnostic System, Onboard 216
Dimmer Switch
Headlight 97
Dipsticks
Oil (Engine) 514
Disable Vehicle Towing 503
Disposal
Antifreeze (Engine Coolant) 534
Disturb. 687
Door Ajar. 206, 208
Door Ajar Light 206, 208
Drag And Drop Menu 584
Driver's Seat Back Tilt 50
Driving
Through Flowing, Rising, Or Shallow Standing Water 439
DVD Player (Video Entertainment System). 641

Electric Brake Control System 221
Anti-Lock Brake System 220
Traction Control System 221
Electric Parking Brake 328
Electric Remote Mirrors 94
Electronic Speed Control (Cruise Control) 346
Electronic Stability Control (ESC) 224
Electronic Throttle Control Warning Light 207
Emergency, In Case Of
Hazard Warning Flasher 443
Jacking 466, 468, 538
Jump Starting 495
Overheating 499
Towing 503
Emission Control System Maintenance. 217
Engine 513
Air Cleaner 518
Block Heater 327

Break-In Recommendations 328
Checking Oil Level 514
Compartment 513
Compartment Identification 513
Coolant (Antifreeze) 577
Cooling 530
Exhaust Gas Caution 312, 576
Fails To Start 326
Flooded, Starting 326
Fuel Requirements 572
Oil 516, 576, 577
Oil Filler Cap 513
Oil Filter 518
Oil Selection 516, 576
Oil Synthetic 517
Overheating 499
Starting 321
Engine Oil Viscosity. 517
Engine Oil Viscosity Chart 517
Enhanced Accident Response Feature 280, 505
Ethanol. 574
Exhaust Gas Cautions 312, 576
Exhaust System 312, 529
Exterior Lighting 97, 453
Exterior Lights 97, 315, 449, 453

Filters
Air Cleaner 518
Air Conditioning 137, 521
Engine Oil 518, 577
Engine Oil Disposal 518
Flashers
Hazard Warning 443
Turn Signals 97, 215, 315, 453
Flash-To-Pass. 97, 99
Flooded Engine Starting. 326
Fluid, Brake 579
Fluid Capacities. 576
Fluid Leaks. 315
Fluid Level Checks
Brake 535
Fluids And Lubricants 577
Fog Lights. 97, 100, 454
Fog Lights, Service 454
Fold-Flat Seats 50
Fold In Floor (Stow ‘n Go) Seating 63
Forward Collision Warning. 237
Freeing A Stuck Vehicle 501
Front Position Light. 453

Fuel 572
Additives 573
Clean Air 573
Ethanol 574
Filler Cap (Gas Cap) 422
Gasoline 572
Materials Added 573
Methanol 574
Octane Rating 572, 577
Requirements 572
Specifications 577
Tank Capacity 576
Fuses 456

Garage Door Opener (HomeLink) 160
Gas Cap (Fuel Filler Cap) 422
Gasoline, Clean Air 573
Gasoline, (Fuel) 572
Gasoline, Reformulated 573
Gear Ranges 336
Glass Cleaning 567
Gross Axle Weight Rating 426
Gross Vehicle Weight Rating 426
GVWR 424

Hazard
Driving Through Flowing, Rising, Or Shallow Standing Water 439
Hazard Warning Flashers 443
Headlights 97
Bulb Replacement 451
Cleaning 564
High Beam/Low Beam Select Switch 97
Lights On Reminder 97, 100
Passing 97, 99
Replacing 451
Switch 97
Time Delay 97
Washers 99
Head Restraints 85
Heated Mirrors 92, 95
Heater, Engine Block 327
Hill Start Assist 227
Hitches
Trailer Towing 428
HomeLink (Garage Door Opener) 160
Hood Prop 145
Hood Release 145
Hook, Coat 173

Ignition 28
Switch 28
Inside Rearview Mirror 92, 443
Instrument Cluster. 191
Descriptions 215
Display 192
Menu Items 197
Instrument Panel Lens Cleaning 566
Interior And Instrument Lights 101
Interior Appearance Care 565
Interior Lights. 101
Intermittent Wipers (Delay Wipers) 105
Introduction. 4
In Vehicle Help
Vehicle User Guide 18
Inverter
Power 177

Jack Location 466
Jack Operation 466, 538
Jump Starting 495

Key Fob 20
Arm The System 35
Disarm The Alarm 35
Programming Additional Key Fobs 26, 34
Key Fob Battery Service (Remote Keyless Entry) 24
Key Fob Programming (Remote Keyless Entry) 26
Keys 20
Replacement 34

Lane Change And Turn Signals 97
Lane Change Assist 97, 101
LaneSense. 412
Lap/Shoulder Belts 249
Latches. 315
Hood 145
Lead Free Gasoline 572
Leaks, Fluid 315
Life Of Tires 552
Liftgate. 146
Power 148
Light Bulbs 315, 453
Lighter
Cigar 179
Lights. 315
Air Bag 205, 263, 313
Battery Saver 101
Brake Assist Warning 226
Brake Warning 205

Bulb Replacement 449, 453
Center Mounted Stop 455
Cruise 214, 215
Daytime Running 97
Dimmer Switch, Headlight 97
Engine Temperature Warning 207
Exterior 315, 453
Fog 100, 454
Headlights 97, 99, 451
High Beam/Low Beam Select 97
Instrument Cluster 97
Intensity Control 103
Interior 101
Lights On Reminder 97, 100
Malfunction Indicator (Check Engine) 211
Parade Mode (Daytime Brightness) 104
Park 215
Passing 97, 99
Reading 101
Seat Belt Reminder 208
Security Alarm 209
Service 449
Side Marker 453
SmartBeams 98
Traction Control 226
Turn Signals 97, 215, 315, 453
Warning Instrument Cluster Descriptions 207, 215
Load Floor, Cargo 152
Loading Vehicle 152, 424
Tires 544
Load Shed Battery Saver Mode 202
Load Shed Battery Saver On 202
Load Shed Electrical Load Reduction. 202
Load Shed Intelligent Battery Sensor 202
Low Tire Pressure System. 241
Lubrication, Body 523
Luggage Carrier 180
Lug Nuts 571

Maintenance Free Battery 515
Maintenance Schedule 509
Malfunction Indicator Light (Check Engine). 211, 217
Manual
Park Release 500
Service 698
Map/Reading Lights 101
Marker Lights, Side 453
Media Hub 640
Memory Feature (Memory Seats) 50
Memory Seat 50, 94

Memory Seats And Radio 50
Methanol 574
Mini-Trip Computer. 204
Mirrors 92
Automatic Dimming 92
Electric Remote 94
Exterior Folding 95
Heated 92, 95
Outside 92, 93
Rearview 92, 443
Vanity 96
Modifications/Alterations
Vehicle 5
Monitor, Tire Pressure System. 241
Mopar Parts 697
MP3 Control 640
Multi-Function Control Lever. 97

New Vehicle Break-In Period 328

Occupant Restraints. 246
Octane Rating, Gasoline (Fuel) 572, 577
Oil Change Indicator 194
Reset 194
Oil, Engine. 516, 577
Capacity 576
Change Interval 516
Checking 514
Disposal 518
Filter 518, 577
Filter Disposal 518
Identification Logo 517
Materials Added To 517
Pressure Warning Light 209
Recommendation 516, 576
Synthetic 517
Viscosity 517, 576
Oil Filter, Change 518
Oil Filter, Selection. 518
Oil Pressure Light 209
Onboard Diagnostic System 216
Operating Precautions 216
Operator Manual
Owner's Manual 5, 698
Outside Rearview Mirrors. 92, 93
Overheating, Engine 499
Owner's Manual (Operator Manual). 5

Paint Care. 563
Parking Brake 328

ParkSense System, Rear 368, 378
Personalized Main Menu 584
Pets 311
Placard, Tire And Loading Information 544
Power
  Brakes 570
  Inverter 177
  Mirrors 94
  Outlet (Auxiliary Electrical Outlet) 174
  Seats 73, 75
  Steering 341
Power Seats
  Down 74
  Forward 74
  Rearward 74
  Up 74
Power Sliding Door
  On / Off Switch 45, 148
Pregnant Women And Seat Belts 258
Preparation For Jacking 467
Pretensioners
  Seat Belts 259

Radial Ply Tires 550
Radiator Cap (Coolant Pressure Cap). 533
Radio Frequency
  General Information 27, 33, 34, 43
Radio Operation 673
Rear Air Conditioning 118, 131
Rear Camera 419
Rear Cross Path. 235
Rear ParkSense System 368, 378
Rear Seat Removal 53
Rear View 92
Reclining Front Seats 51
Recreational Towing. 437
Reformulated Gasoline. 573
Refrigerant 520
Release, Hood 145
Reminder, Lights On 97
Reminder, Seat Belt 248
Remote Control
  Starting System 30
Remote Keyless Entry
  Arm The Alarm 35
  Disarm The Alarm 35
  Programming Additional Key Fobs 26, 34
Remote Starting
  Exit Remote Start Mode 32
  Uconnect Customer Programmable Features 33

Uconnect Settings 33
Remote Starting System 30
Replacement Bulbs 449
Replacement Keys 34
Replacement Tires 553
Reporting Safety Defects 697
Restraints, Child 283
Restraints, Head 85
Roof Luggage Rack 180
Rotation, Tires 560

Safety Checks Inside Vehicle 312
Safety Checks Outside Vehicle 315
Safety Defects, Reporting 697
Safety, Exhaust Gas 312
Safety Information, Tire 538
Safety Tips 311
Schedule, Maintenance 509
Seat Belt Reminder 208
Seat Belts 247, 312
Adjustable Shoulder Belt 253
Adjustable Upper Shoulder Anchorage 253
Adjustable Upper Shoulder Belt Anchorage 253
Automatic Locking Retractor (ALR) 259
Child Restraints 283
Energy Management Feature 259
Extender 258
Front Seat 247, 249, 251
Inspection 312
Lap/Shoulder Belt Operation 251
Lap/Shoulder Belts 249
Lap/Shoulder Belt Untwisting 253
Operating Instructions 251
Pregnant Women 258
Pretensioners 259
Rear Seat 249
Reminder 248
Seat Belt Extender 258
Seat Belt Pretensioner 259
Untwisting Procedure 253
Seat Belts Maintenance 565
Seats 50, 74, 81
Adjustment 50, 52, 53, 74
Bench 53
Heated 81
Power 73, 75
Rear Folding 50
Reclining 51
Seatback Release 50, 52, 53
Stow ‘n Go (Fold in Floor) 63

Tilting 50, 52
Security Alarm 209
Arm The System 35
Disarm The System 35
Selection Of Coolant (Antifreeze) 577
Sentry Key
Key Programming 34
Sentry Key (Immobilizer) 33
Sentry Key Replacement 34
Service Assistance 694
Service Contract 696
Service Manuals 698
Shifting
Automatic Transmission 335
Shoulder Belts 249
Side View Mirror Adjustment 92
Signals, Turn 97, 215, 315, 453
Siri 686
SiriusXM Guardian
Vehicle Health Alert 685
SmartBeams 98
Snow Chains (Tire Chains) 559
Snow Tires 555
Spare Tires 467, 555, 556, 557
Spark Plugs 577
Specifications
Oil 577
Speed Control
Accel/Decel (ACC Only) 353
Cancel 348
Resume 348
Speed Control (Cruise Control) 346, 348
Starting 30, 321
Button 28
Cold Weather 326
Engine Fails To Start 326
Remote 30
Starting And Operating 321
Starting Procedures 321
Steering 341
Tilt Column 90
Wheel, Heated 90
Wheel, Tilt 90
Steering Wheel Audio Controls 639
Steering Wheel Mounted Sound System Controls 639
Storage, Vehicle 136
Stow ‘n Go (Fold In Floor) Seats 63
Stow ‘n Vac 152
Stuck, Freeing 501
Sunglasses Storage 180

Sun Roof 141
Supplemental Restraint System – Air Bag. 265
Sway Control, Trailer 229
Synthetic Engine Oil 517
System, Remote Starting 30

Telescoping Steering Column 90
Temperature Control, Automatic (ATC) 135
Tie Down Hooks, Cargo. 152
Tilt Steering Column 90
Time Delay
  Headlight 97
Tire And Loading Information Placard. 544
Tire Markings 538
Tires. 315, 548, 555, 561
  Aging (Life Of Tires) 552
  Air Pressure 548
  Chains 559
  Changing 466, 538
  Compact Spare 556
  General Information 548, 555
  High Speed 550
  Inflation Pressure 549
  Jacking 466, 468, 538
  Life Of Tires 552
  Load Capacity 544, 545
  Pressure Monitoring System (TPMS) 197, 212, 241
  Quality Grading 561
  Radial 550
  Replacement 553
  Rotation 560
  Safety 538, 548
  Sizes 540
  Snow Tires 555
  Spare Tires 467, 555, 557
  Spinning 551
  Trailer Towing 433
  Tread Wear Indicators 552
  Wheel Nut Torque 571
Tire Safety Information. 538
Tire Service Kit 484
Tongue Weight/Trailer Weight 432
To Open Hood 145
Towing. 426
  Disabled Vehicle 503
  Guide 429
  Recreational 437
  Weight 429
Towing Behind A Motorhome. 437
Traction 438, 439

Traction Control 221
Trailer Sway Control (TSC) 229
Trailer Towing 426
Cooling System Tips 437
Hitches 428
Minimum Requirements 432
Tips 436
Trailer And Tongue Weight 432
Wiring 435
Trailer Towing Guide 429
Trailer Weight 429
Transaxle
Automatic 333
Operation 333
Transmission 335
Automatic 335, 536
Maintenance 536
Transporting Pets 311
Tread Wear Indicators 552
Turn Signals 97, 215, 453

Uconnect
Theater 641
Uconnect Settings 33, 586
Uconnect 4C/4C Nav With 8.4-Inch Display 613
Uconnect 4 With 7-Inch Display 587
Uconnect Settings
Customer Programmable Features 33, 586
Uconnect Voice Command 675
Umbrella Holder 169
Uniform Tire Quality Grades 561
Universal Garage Door Opener (HomeLink) 160
Universal Transmitter 160
Unleaded Gasoline 572
Untwisting Procedure, Seat Belt 253
USB 640

Vacuum 152
Stow ‘n Vac 152
Vanity Mirrors 96
Vehicle Identification Number (VIN) 570
Vehicle Loading 424, 545
Vehicle Modifications/Alterations 5
Vehicle Storage 136
Vehicle User Guide
In Vehicle Help 18
Navigation 18
Operating Instructions 18
Searching User Guide 18
Viscosity, Engine Oil 517

Voice Recognition System (VR) 675

Warning Lights (Instrument Cluster Descriptions). . . .210
Warnings And Cautions 5
Warranty Information 697
Washers, Windshield 514
Washing Vehicle 564
Water
  Driving Through 439
Wheel And Wheel Tire Care 558
Wheel And Wheel Tire Trim 558
Wind Buffeting 143
Window Fogging. 136
Windshield Defroster 313
Windshield Washers 104, 514
  Fluid 514
Windshield Wiper Blades 524
Wipers Blade Replacement 524
Wipers, Intermittent 104, 105
Wireless Charging Pad 177
Wrecker Towing 503

INSTALLATION OF RADIO TRANSMITTING EQUIPMENT

Special design considerations are incorporated into this vehicle's electronic system to provide immunity to radio frequency signals. Mobile two-way radios and telephone equipment must be installed properly by trained personnel. The following must be observed during installation.

The positive power connection should be made directly to the battery and fused as close to the battery as possible. The negative power connection should be made to body sheet metal adjacent to the negative battery connection. This connection should not be fused.

Antennas for two-way radios should be mounted on the roof or the rear area of the vehicle. Care should be used in mounting antennas with magnet bases. Magnets may affect the accuracy or operation of the compass on vehicles so equipped.

The antenna cable should be as short as practical and routed away from the vehicle wiring when possible. Use only fully shielded coaxial cable.

Carefully match the antenna and cable to the radio to ensure a low Standing Wave Ratio (SWR).

Mobile radio equipment with output power greater than normal may require special precautions.

All installations should be checked for possible interference between the communications equipment and the vehicle's electronic systems.

⚠ WARNING:

Operating, servicing and maintaining a passenger vehicle or off-road highway motor vehicle can expose you to chemicals including engine exhaust, carbon monoxide, phthalates, and lead, which are known to the State of California to cause cancer and birth defects or other reproductive harm. To minimize exposure, avoid breathing exhaust, do not idle the engine except as necessary, service your vehicle in a well-ventilated area and wear gloves or wash your hands frequently when servicing your vehicle. For more information go to www.P65Warnings.ca.gov/passenger-vehicle.

CHRYSLER

19RU-126-AA
©2018 FCA US LLC. All Rights Reserved.
Chrysler is a registered trademark of FCA US LLC.

First Edition
Printed in the U.S.A.