Repair Manual

Golf 2015 ➤
Golf Variant 2015 ➤

Fuel Supply - Gasoline Engines									
Engine ID	CNT A	CXB A	CNS A	CXB B	CNS B	CXC A	CXC B		

Edition 01.2016

Protected by copyright. Copying for private or commercial purposes, in part or in whole, is not permitted unless authorised by Volkswagen AG. Volkswagen AG does not guarantee or accept any liability with respect to the correctness of information in this document. Copyright by Volkswagen AG.

List of Workshop Manual Repair Groups

Repair Group

00 - General, Technical Data

20 - Fuel Supply

Protected by copyright. Copying for private or commercial purposes, in part or in whole, is not permitted unless authorised by Volkswagen AG. Volkswagen AG does not guarantee or accept any liability with respect to the correctness of information in this document. Copyright by Volkswagen AG.

Technical information should always be available to the foremen and mechanics, because their careful and constant adherence to the instructions is essential to ensure vehicle road-worthiness and safety. In addition, the normal basic safety precautions for working on motor vehicles must, as a matter of course, be observed.

All rights reserved.
No reproduction without prior agreement from publisher.

Copyright © 2016 Volkswagen AG, Wolfsburg

D4B80416623

Protected by copyright. Copying for private or commercial purposes, in part or in whole, is not permitted unless authorised by Volkswagen AG. Volkswagen AG does not guarantee or accept any liability with respect to the correctness of information in this document. Copyright by Volkswagen AG.

Contents

00 - General, Technical Data 1
1 Safety Precautions 1
1.1 Safety Precautions when Working on Fuel Supply System 1
1.2 Safety Precautions during Road Test with Testing Equipment 1
1.3 Safety Precautions when Working on Vehicles with Start/Stop System 2
2 Identification 3
2.1 Engine Number/Engine Characteristics 3
3 General Information 4
3.1 Parking/Auxiliary Heater and Fuel System Clean Working Conditions 4
4 Repair Information 5
4.1 Wire Routing and Securing 5
4.2 General Repair Information 5

20 - Fuel Supply 6
1 Fuel Tank 6
1.1 Overview - Fuel Tank 6
1.2 Fuel Tank, Removing and Installing 11
1.3 Fuel Tank, Draining 35
2 Fuel Delivery Unit/Fuel Level Sensor 51
2.1 Overview - Fuel Delivery Unit/Fuel Level Sensor 51
2.2 Fuel Delivery Unit/Fuel Level Sensor, Removing and Installing 52
2.3 Fuel Level Sensor G , Removing and Installing 56
3 Wiring 58
3.1 Fuel Lines, Removing and Installing 58
4 Connector Couplings 62
4.1 Connector Couplings, Disconnecting 62
5 Fuel Filter 66
6 EVAP System 67
6.1 Connection Diagram - EVAP System 67
6.2 Overview - EVAP System 69
6.3 EVAP Canister, Removing and Installing 70
6.4 Fuel Tank, Checking Ventilation 72
6.5 Fuel System, Checking for Leaks 76
7 Accelerator Mechanism 79
7.1 Overview - Accelerator Pedal Module 79
7.2 Accelerator Pedal Position Sensors G79 / G185 , Removing and Installing 80
8 Fuel Pump 81
8.1 Transfer Fuel Pump G6 , Checking 81
8.2 Fuel Pump Control Module J538 , Removing and Installing 116
9 Sensors 119
9.1 Fuel Tank Pressure Sensor G400 , Removing and Installing 119
9.2 Fuel Tank Leak Detection Control Module J909 , Removing and Installing 120
10 Special Tools 122
11 Revision History 127

Protected by copyright. Copying for private or commercial purposes, in part or in whole, is not permitted unless authorised by Volkswagen AG. Volkswagen AG does not guarantee or accept any liability with respect to the correctness of information in this document. Copyright by Volkswagen AG.

00 – General, Technical Data

1 Safety Precautions

(Edition 01.2016)

⇒ "1.1 Safety Precautions when Working on Fuel Supply System", page 1

⇒ "1.2 Safety Precautions during Road Test with Testing Equipment", page 1

⇒ "1.3 Safety Precautions when Working on Vehicles with Start/Stop System", page 2

1.1 Safety Precautions when Working on Fuel Supply System

Caution

There is a risk of injury due to the fuel being under pressure.

The fuel system is under pressure. Injuries are possible from fuel spraying out.

Before opening the fuel system:

– Wear protective eyewear.
– Wear safety gloves.
– Reduce the pressure: place clean cloths around the connection point and carefully open the connection point.

Procedure for reducing the high fuel pressure: Refer to ⇒ Rep. Gr. 24 ; Fuel Injection System; High Fuel Pressure, Reducing .

Caution

Risk of a fire due to leaking fuel.

When the battery is connected, the door contact switch activates the fuel pump when opening the driver door. Leaking fuel can ignite and start a fire.

– Before opening the fuel system, interrupt the power supply to the fuel pump.

1.2 Safety Precautions during Road Test with Testing Equipment

WARNING

There is a risk of injury caused by unsecured testing equipment.

If the front passenger airbag deploys during an accident, unsecured testing equipment becomes a dangerous projectile.

– Secure the testing equipment on the rear seat.

or

Protected by copyright. Copying for private or commercial purposes, in part or in whole, is not permitted unless authorised by Volkswagen AG. Volkswagen AG does not guarantee or accept any liability with respect to the correctness of information in this document. Copyright by Volkswagen AG.

– Have a second technician operate the testing equipment on the rear seat.

1.3 Safety Precautions when Working on Vehicles with Start/Stop System

WARNING

There is a risk of injury due to the engine starting unexpectedly.

The engine can start unexpectedly on vehicles with an activated Start/Stop System. A message in the instrument cluster indicates whether the Start/Stop System is activated.

– Deactivate the Start/Stop System: switch off the ignition.

Protected by copyright. Copyright for private or commercial purposes, in part or in whole, is not permitted unless authorised by Volkswagen AG. Volkswagen AG does not guarantee or accept any liability with respect to the correctness of information in this document. Copyright by Volkswagen AG.

2 Identification

⇒ “2.1 Engine Number/Engine Characteristics”, page 3

2.1 Engine Number/Engine Characteristics

Codes	CXBA	CXBB	CNSA	CNSB
Emissions values	SULEV	SULEV	SULEV	SULEV
Displace-ment liter	1.8	1.8	1.8	1.8
Output kW	125	125	125	125
RON	95 unleaded	95 unleaded	95 unleaded	95 unleaded

Codes	CXCA	CNTA	CXCB
Emissions values	SULEV	SULEV	SULEV
Displacement liters	2.0	2.0	2.0
Output kW	162	155	162
Research Octane Number (RON)	95 unleaded	95 unleaded	95 unleaded[1]

1) Starting 2016 91 RON

Protected by copyright. Copying for private or commercial purposes, in part or in whole, is not permitted unless authorised by Volkswagen AG. Volkswagen AG does not guarantee or accept any liability with respect to the correctness of information in this document. Copyright by Volkswagen AG.

3 General Information

⇒ “3.1 Parking/Auxiliary Heater and Fuel System Clean Working Conditions”, page 4

3.1 Parking/Auxiliary Heater and Fuel System Clean Working Conditions

Special tools and workshop equipment required

- Engine Bung Set - VAS6122-

Follow these five “rules” when working on the fuel supply/injector system:

- Thoroughly clean the connecting points and the surrounding area before loosening.
- Place the removed parts on a clean surface and cover them. Only use lint-free cloths!
- Carefully cover or seal opened components if the repair will not be done immediately.
- Only install clean parts: remove replacement parts from the packaging immediately prior to installation. Do not use parts that have been stored loose (for example, in tool boxes etc.).
- When the system is open: do not work with compressed air.
- Do not move vehicle.
- Seal off any open lines and connections immediately with plugs, for example, take from -VAS6122- .
- Protect the disconnected connectors from dirt and moisture and only connect when they are dry.

Protected by copyright. Copyright by Volkswagen AG.

4 Repair Information

⇒ “4.1 Wire Routing and Securing”, page 5

⇒ “4.2 General Repair Information”, page 5

4.1 Wire Routing and Securing

WARNING

There is a risk of damaging lines.

It is possible to damage the wires with the moving or hot components.

– Route wire in the original wiring guide.

– Ensure sufficient clearance to moving or hot components.

◆ Mark the individual fuel and vacuum lines for the Evaporative Emission (EVAP) canister system as well as the electrical wires before disconnecting and/or removing them. This will prevent a mix-up when reconnecting them. If necessary, draw sketches or take pictures.

4.2 General Repair Information

Complete the Following Steps Before Starting Work on the Fuel Supply System:

◆ Before starting work, place the extracting hose on an exhaust extractor that is switched on near the fuel tank assembly opening.

◆ This extracts the fuel vapors.

◆ If no exhaust extraction system is available, a radial fan (as long as motor is not in air flow) with a displacement greater than 15 m ^{3}/h can be used.

◆ Do not let fuel come in contact with bare skin. Wear fuel-resistant gloves.

◆ Disable the current to the Transfer Fuel Pump - G6- . Refer to ⇒ Wiring diagrams, Troubleshooting & Component locations.

◆ Drain the fuel tank. Refer to
⇒ “1.3 Fuel Tank, Draining”, page 35 .

Protected by copyright. Copying for private or commercial purposes, in part or whole, is not permitted unless authorised by Volkswagen AG. Volkswagen AG does not guarantee or accept any liability with respect to the correctness of information in this document. Copyright by Volkswagen AG.

20 – Fuel Supply

1 Fuel Tank

⇒ “1.1 Overview - Fuel Tank”, page 6

⇒ “1.2 Fuel Tank, Removing and Installing”, page 11

⇒ “1.3 Fuel Tank, Draining”, page 35

1.1 Overview - Fuel Tank

⇒ “1.1.1 Overview - Fuel Tank, Vehicles with Multi-Link Rear Axle and FWD”, page 6

⇒ “1.1.2 Overview - Fuel Tank, Vehicles with FWD and Torsion Beam Rear Suspension”, page 8

⇒ “1.1.3 Overview - Fuel Tank, Vehicles with Fuel Tank Leak Detection”, page 10

1.1.1 Overview - Fuel Tank, Vehicles with Multi-Link Rear Axle and FWD

1 - Fuel Line

- ❑ Vehicles with Parking Heater
- ❑ To Metering Pump - V54-
- ❑ Do not kink
- ❑ To disconnect, press the release button on the connecting piece
- ❑ The connector couplings must »audibly« engage when locking.
- ❑ Pull on the connector coupling to check for secure fit.
- ❑ Connector Couplings, Disconnecting. Refer to ⇒ “4.1 Connector Couplings, Disconnecting”, page 62 .

2 - Fuel Supply Line

- ❑ To the engine
- ❑ Clipped to the fuel tank
- ❑ Do not kink
- ❑ To disconnect, press the release button on the connecting piece
- ❑ The connector couplings must »audibly« engage when locking.
- ❑ Pull on the connector coupling to check for secure fit.
- ❑ Connector Couplings, Disconnecting. Refer to ⇒ “4.1 Connector Couplings, Disconnecting”, page 62 .

in whole or in part is not permitted unless authorised by Volkswagen AG. Volkswagen AG does not guarantee or accept any liability with respect to the correctness of information in this document

3 - Bleeder Line

- ❑ To the EVAP Canister Purge Regulator Valve 1 - N80-
- ❑ Clipped to the fuel tank
- ❑ Do not kink
- ❑ To disconnect, press the release button on the connecting piece
- ❑ The connector couplings must »audibly« engage when locking.
- ❑ Pull on the connector coupling to check for secure fit.
- ❑ Connector Couplings, Disconnecting. Refer to ⇒ “4.1 Connector Couplings, Disconnecting”, page 62 .

4 - Bracket

- ❑ For Fuel Pump Control Module - J538-
- ❑ Fuel Pump Control Module - J538- , removing and installing. Refer to ⇒ “8.2 Fuel Pump Control Module J538 , Removing and Installing”, page 116 .

5 - Bolt

- ❑ 20 Nm +90°
- ❑ Replace after removing.

6 - Bolt

- ❑ 8 Nm +90°
- ❑ Replace after removing.

7 - Cap

- ❑ Turn until it clicks into place.
- ❑ Attached to the fuel filler door unit with fastener

8 - Bolt

- ❑ 8 Nm +90°
- ❑ Replace after removing.
- ❑ For securing the fuel filler neck

9 - Ground Connection

- ❑ For the fuel filler neck
- ❑ For discharging electrostatic charge

10 - Bleeder Line

- ❑ To the EVAP Canister
- ❑ Clipped to the fuel tank
- ❑ Do not kink
- ❑ To disconnect, press the release button on the connecting piece
- ❑ The connector couplings must »audibly« engage when locking.
- ❑ Pull on the connector coupling to check for secure fit.
- ❑ Connector Couplings, Disconnecting. Refer to ⇒ “4.1 Connector Couplings, Disconnecting”, page 62 .

11 - Bleeder Line

- ❑ To the EVAP Canister
- ❑ Clipped to the fuel tank
- ❑ Do not kink
- ❑ To disconnect, press the release button on the connecting piece
- ❑ The connector couplings must »audibly« engage when locking.
- ❑ Pull on the connector coupling to check for secure fit.
- ❑ Connector Couplings, Disconnecting. Refer to ⇒ “4.1 Connector Couplings, Disconnecting”, page 62 .

12 - Fuel Tank

- ❑ Removing and Installing. Refer to ⇒ “1.2.1 Fuel Tank, Removing and Installing, Vehicles with Multi-Link Rear Axle”, page 11 .

Protected by copyright. Copying for private or commercial purposes, in part or in whole, is not permitted unless authorised by Volkswagen AG. Volkswagen AG does not guarantee or accept any liability with respect to the correctness of information in this document. Copyright by Volkswagen AG.

Copyright by Volkswagen AG. Volkswagen AG does not guarantee or accept any liability with respect to the correctness of information in this copyright document. Copying for private or commercial purposes, in part or in whole, is not permitted unless authorised by Volkswagen AG.

13 - Bolt
- ❑ 20 Nm + 90°
- ❑ Replace after removing.

14 - Nut
- ❑ 2 Nm
- ❑ For the heat shield

15 - Heat Shield
- ❑ For the fuel tank

16 - Mounting Strap

17 - Bolts
- ❑ 20 Nm + 90°
- ❑ Replace after removing.

1.1.2 Overview - Fuel Tank, Vehicles with FWD and Torsion Beam Rear Suspension

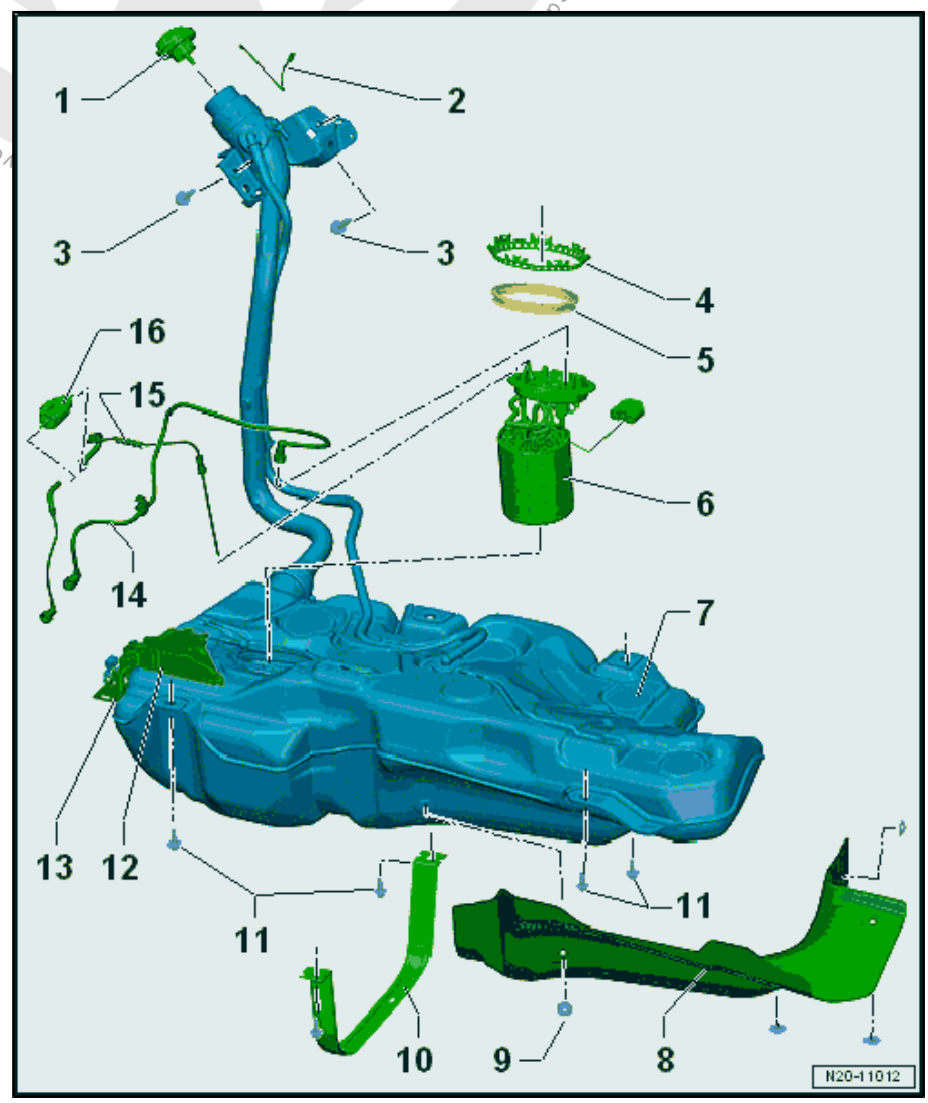

1 - Cap
- ❑ Turn until it clicks into place.
- ❑ Attached to the fuel filler door unit with fastener

2 - Ground Connection
- ❑ For the fuel filler neck

3 - Bolt
- ❑ 8 Nm +90°
- ❑ Replace after removing.

4 - Locking Ring
- ❑ 110 Nm ± 5 Nm

5 - Seal
- ❑ Replace
- ❑ Install dry

6 - Fuel Delivery Unit
- ❑ Overview. Refer to ⇒ “2.1 Overview - Fuel Delivery Unit/Fuel Level Sensor”, page 51 .
- ❑ Removing and Installing ⇒ “2.2 Fuel Delivery Unit/Fuel Level Sensor, Removing and Installing”, page 52
- ❑ With Fuel Level Sensor - G-
- ❑ Fuel Level Sensor - G- , Removing and Installing. Refer to ⇒ “2.3 Fuel Level Sensor G , Removing and Installing”, page 56 .
- ❑ With the Transfer Fuel Pump - G6-
- ❑ Transfer Fuel Pump - G6- , Checking. Refer to ⇒ “8 Fuel Pump”, page 81 .

7 - Fuel Tank

- ❑ Removing and Installing. Refer to ⇒ “1.2.3 Fuel Tank, Removing and Installing, Vehicles with Torsion Beam Rear Suspension”, page 23 .

8 - Heat Shield

- ❑ For the fuel tank

9 - Locking Plate

- ❑ Quantity: 4
- ❑ For the heat shield

10 - Mounting Strap

- ❑ Pay attention to proper seating
- ❑ Mark the direction of travel during removal

11 - Bolt

- ❑ 20 Nm + 90°
- ❑ Replace after removing.

12 - Bracket

- ❑ For Fuel Pump Control Module - J538-
- ❑ Fuel Pump Control Module - J538- , removing and installing. Refer to ⇒ “8.2 Fuel Pump Control Module J538 , Removing and Installing”, page 116 .

13 - Bracket

- ❑ For the Metering Pump - V54-
- ❑ Make sure the Metering Pump - V54- is seated correctly in the bracket

14 - Fuel Supply Line

- ❑ Clipped to the fuel tank
- ❑ Do not kink
- ❑ To disconnect, press the release button on the connecting piece
- ❑ The connector couplings must »audibly« engage when locking.
- ❑ Pull on the connector coupling to check for secure fit.
- ❑ Connector Couplings, Disconnecting. Refer to ⇒ “4.1 Connector Couplings, Disconnecting”, page 62 .

15 - Fuel Line

- ❑ For vehicles with a parking heater, from the Metering Pump - V54- for the parking heater
- ❑ Do not kink
- ❑ Installation position. Refer to ⇒ Heating, Ventilation and Air Conditioning; Rep. Gr. 82 ; Component Location Overview - Fuel Supply .
- ❑ Check the fit by pulling on it.

16 - Metering Pump - V54-

- ❑ For vehicles with parking heater
- ❑ Secured on the fuel tank ⇒ Item 13 (page 9) .

Protected by copyright. Copying for private or commercial purposes, in part or in whole, is not permitted unless authorised by Volkswagen AG. Volkswagen AG does not guarantee or accept any liability with respect to the correctness of information in this document. Copyright by Volkswagen AG.

1.1.3 Overview - Fuel Tank, Vehicles with Fuel Tank Leak Detection

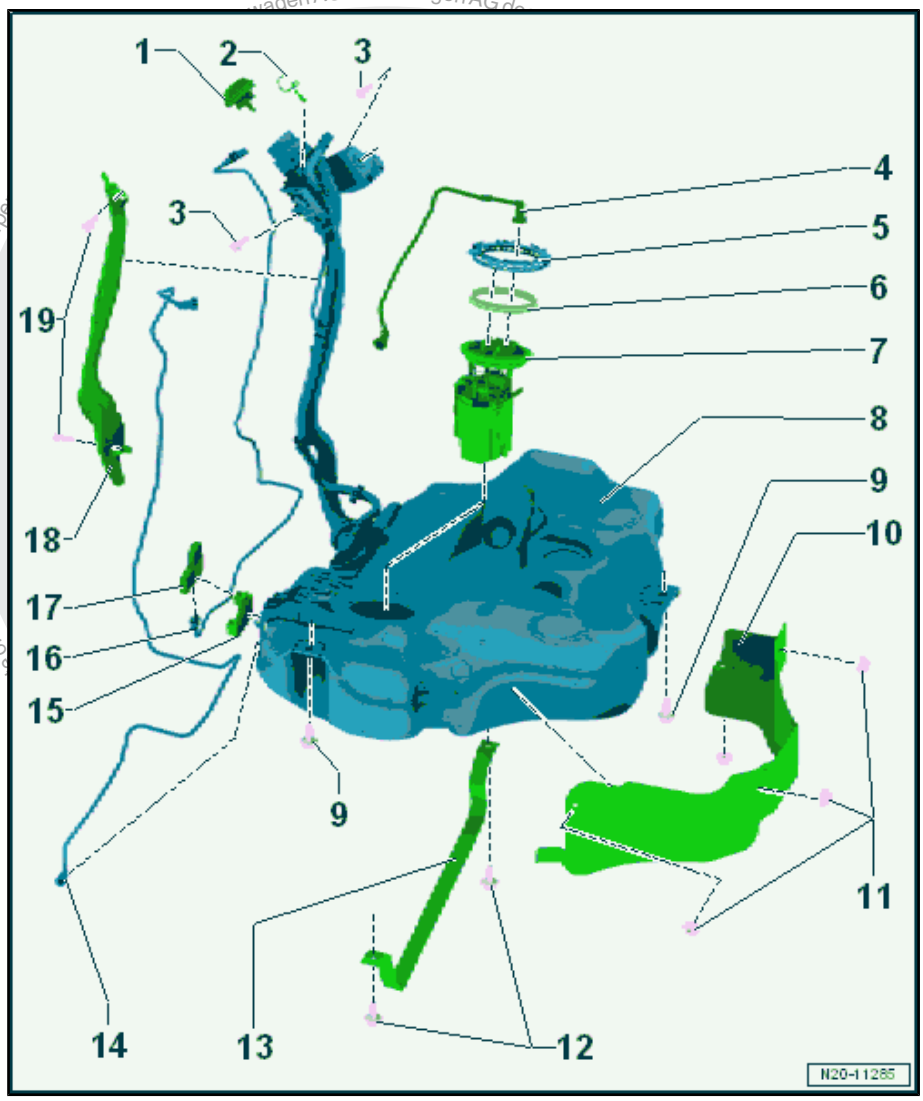

1 - Cap

- ❑ Turn until it clicks into place.
- ❑ Attached to the fuel filler door unit with fastener

2 - Ground Connection

- ❑ For the fuel filler neck

3 - Bolt

- ❑ 8 Nm +90°
- ❑ Replace after removing.

4 - Fuel Supply Line

- ❑ Clipped to the fuel tank
- ❑ Do not kink
- ❑ To disconnect, press the release button on the connecting piece
- ❑ The connector couplings must »audibly« engage when locking.
- ❑ Pull on the connector coupling to check for secure fit.
- ❑ Connector Couplings, Disconnecting. Refer to ⇒ “4.1 Connector Couplings, Disconnecting”, page 62 .

5 - Locking Ring

- ❑ 110 Nm

6 - Seal

- ❑ Replace
- ❑ Install dry

7 - Fuel Delivery Unit

- ❑ Overview. Refer to ⇒ “2.1 Overview - Fuel Delivery Unit/Fuel Level Sensor”, page 51 .
- ❑ Removing and Installing ⇒ “2.2 Fuel Delivery Unit/Fuel Level Sensor, Removing and Installing”, page 52
- ❑ With Fuel Level Sensor - G-
- ❑ Fuel Level Sensor - G- , Removing and Installing. Refer to ⇒ “2.3 Fuel Level Sensor G , Removing and Installing”, page 56 .
- ❑ With the Transfer Fuel Pump - G6-
- ❑ Transfer Fuel Pump - G6- , Checking. Refer to ⇒ “8 Fuel Pump”, page 81 .

8 - Fuel Tank

- ❑ Removing and Installing. Refer to ⇒ “1.2.3 Fuel Tank, Removing and Installing, Vehicles with Torsion Beam Rear Suspension”, page 23 .

9 - Bolt

- ❑ 20 Nm +90°
- ❑ Replace after removing.

10 - Heat Shield

- ❑ For the fuel tank

11 - Metal Nut

- ❑ For the heat shield

12 - Bolt

- ❑ 20 Nm +90°
- ❑ Replace after removing.

13 - Mounting Strap

- ❑ Pay attention to proper seating
- ❑ Mark the direction of travel during removal

14 - Bleeder Line

- ❑ To the EVAP Canister Purge Regulator Valve 1 - N80-

15 - Bracket

- ❑ For Fuel Tank Leak Detection Control Module - J909-

16 - Connection Cable

- ❑ For Fuel Tank Leak Detection Control Module - J909-

17 - Fuel Tank Leak Detection Control Module - J909-

18 - Protective Plate

19 - Rivets

- ❑ For securing the protective plate

1.2 Fuel Tank, Removing and Installing

⇒ "1.2.1 Fuel Tank, Removing and Installing, Vehicles with Multi-Link Rear Axle", page 11

⇒ "1.2.2 Fuel Tank, Removing and Installing, Vehicles with Multi-Link Rear Axle and Leak Detection-Fuel Tank", page 17

⇒ "1.2.3 Fuel Tank, Removing and Installing, Vehicles with Torsion Beam Rear Suspension", page 23

⇒ "1.2.4 Fuel Tank, Removing and Installing, Vehicles with Torsion Beam Rear Suspension and Engine Code CWVA", page 29

1.2.1 Fuel Tank, Removing and Installing, Vehicles with Multi-Link Rear Axle

Special tools and workshop equipment required

- ♦ Torque Wrench 1331 5-50Nm - VAG1331-
- ♦ Trim Removal Wedge - 3409-
- ♦ Engine and Gearbox Jack - VAS6931-
- ♦ Torque Wrench 1332 40-200Nm - VAG1332-

Removing

- – Observe the safety instructions. Refer to ⇒ "1 Safety Precautions", page 1.
- – Follow the guidelines for clean working conditions. Refer to ⇒ "3.1 Parking/Auxiliary Heater and Fuel System Clean Working Conditions", page 4 .
- – Move the front seats all the way forward.
- – Switch off the ignition.

Volkswagen AG. Volkswagen AG does not guarantee or accept any liability with respect to the correctness of information in this document. Copyright by Volkswagen AG. Copying for private or commercial purposes, in part or in whole, is not permitted unless authorised by Volkswagen AG.

Golf Sportsvan:

– Remove the right rear seat. Refer to ⇒ Body Interior; Rep. Gr. 72 ; Rear Seats; Bench Seat / Single Seat, Removing and Installing .

– Partially loosen the cover -1- in the carpet at the separating line -arrow-.

– Do not separate the cover completely from the carpet so that later it will be installed correctly.

– Only loosen so far that the cover can be folded up.

– Fold up the cover in the direction of the -arrow-.

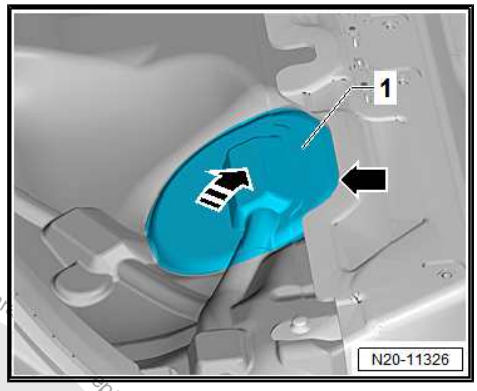

Golf and Golf Wagon:

– Remove the rear bench seat. Refer to ⇒ Body Interior; Rep. Gr. 72 ; Rear Seats; Bench Seat / Single Seats, Removing and Installing .

Continuation for All Vehicles:

– Drain the fuel tank. Refer to ⇒ “1.3 Fuel Tank, Draining”, page 35 .

– Unclip the sealing flange cover -1- at the tabs -arrows- using the -3409-.

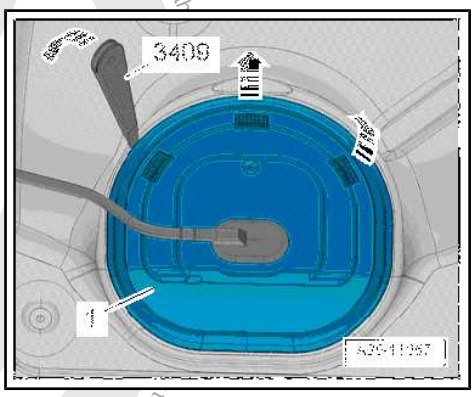

– Unclip the grommet -1- downward out of the cover -2-.

– Guide the cover -2- on the wiring harness -3- toward the rear.

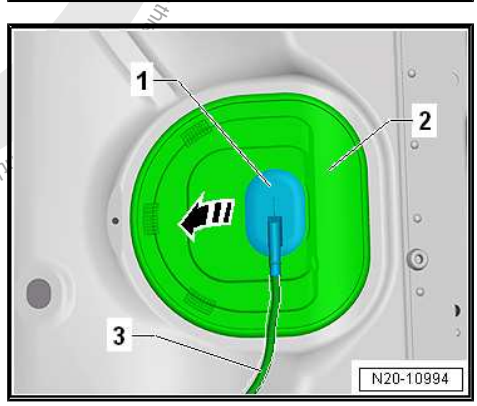

– Unlock and disconnect the connector -1- from the sealing flange.

– If equipped, disengage the connector -2- for the parking heater Metering Pump - V54- on the sealing flange and move it to the side.

– Disconnect the connector -2-.

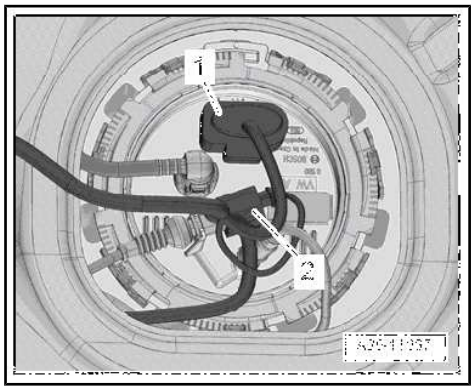

Protected by copyright. Copying for private or commercial purposes, in part or in whole, is not permitted unless authorized by Volkswagen AG. Volkswagen AG does not guarantee or accept any liability with respect to the correctness and completeness of this document.

– Lift the tab -2- in the direction of the -arrow A- by using a finger to reach between the floor panel and the fuel tank.

– At the same time, carefully pull the Fuel Pump Control Module - J538- -1- out of the mount at the wiring harness -3- in the direction of the -arrow B-.

– Remove the Fuel Pump Control Module - J538- toward the inside between the fuel tank and the floor panel.

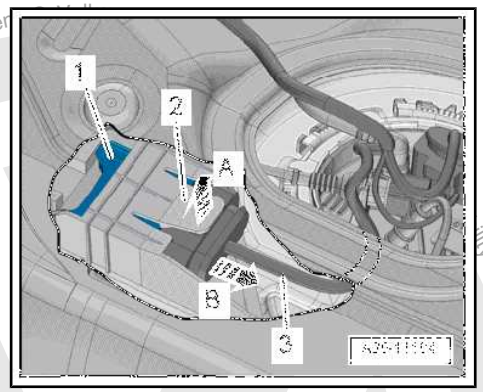

– Open the fuel filler door unit -2-.

– Clean the area around the fuel filler neck.

– Remove the cap -1- for the fuel filler neck.

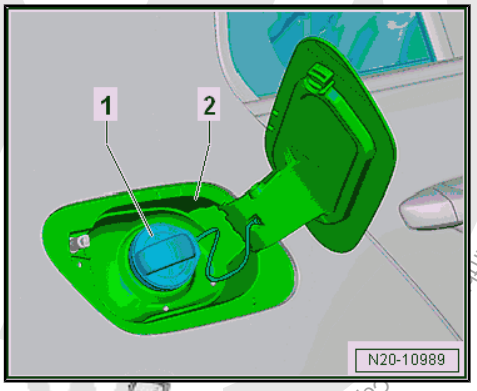

Note

Seal the fuel filler neck opening with a clean plug to prevent any dirt from getting in.

– Remove the fuel filler door unit -2-. Refer to ⇒ Body Exterior; Rep. Gr. 55 ; Fuel Filler Door Unit; Fuel Filler Door Unit, Removing and Installing .

– Remove the right rear wheel. Refer to ⇒ Suspension, Wheels, Steering; Rep. Gr. 44 ; Wheels, Tires; Changing a Wheel .

– Remove the right rear wheel housing liner. Refer to ⇒ Body Exterior; Rep. Gr. 66 ; Wheel Housing Liner; Overview - Rear Wheel Housing Liner .

– Remove the rear underbody trim panel. Refer to ⇒ Body Exterior; Rep. Gr. 66 ; Underbody Trim Panel; Underbody Trim Panels, Removing and Installing .

– Remove the fuel filler neck bolts -1 and 2-.

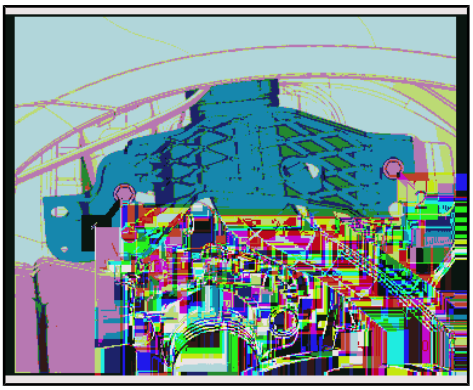

Protected by copyright. Copying for private or commercial purposes, in part or in whole, is not permitted unless authorised by Volkswagen AG. Copyright by Volkswagen AG. No liability with respect to the correctness of information in this

– Disconnect the vent lines -1 and 2- from the EVAP canister. Disconnect the connector couplings. Refer to
⇒ “4.1 Connector Couplings, Disconnecting”, page 62 .

– Unclip the breather line from bracket -arrows-.

– Unclip the breather lines -1 and 2- at the bracket -arrows-.

– Remove the exhaust system rear section. Refer to ⇒ Rep. Gr. 26 ; Exhaust Pipes/Mufflers; Muffler, Removing and Installing .

– Remove the fuel line -1- from the underbody. Disconnect the connector couplings. Refer to
⇒ “4.1 Connector Couplings, Disconnecting”, page 62 .

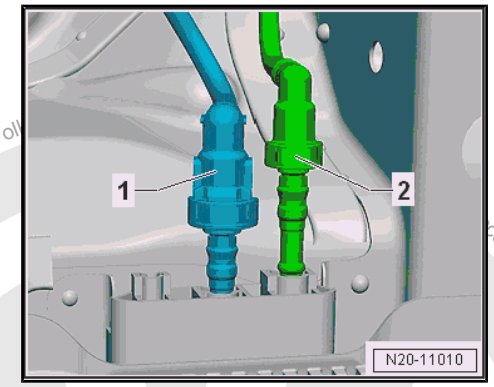

WARNING

The fuel line is under pressure.

Fuel poses a risk of injury to the eyes and skin.

Wear protective eyewear and protective clothing to avoid injury and contact with skin. Place a cleaning cloth around the connection point before loosening hose connections. Carefully open the connection point to release the pressure.

– Disconnect the breather line -2-. Disconnect the connector couplings. Refer to
⇒ “4.1 Connector Couplings, Disconnecting”, page 62 .

Vehicles with Parking Heater:

– Remove the fuel line -1- from the parking heater. Disconnect the connector couplings. Refer to
⇒ “4.1 Connector Couplings, Disconnecting”, page 62 .

– If equipped, remove the rear underbody trim panel. Refer to ⇒ Body Exterior; Rep. Gr. 66 ; Underbody Trim Panel; Underbody Trim Panels, Removing and Installing .

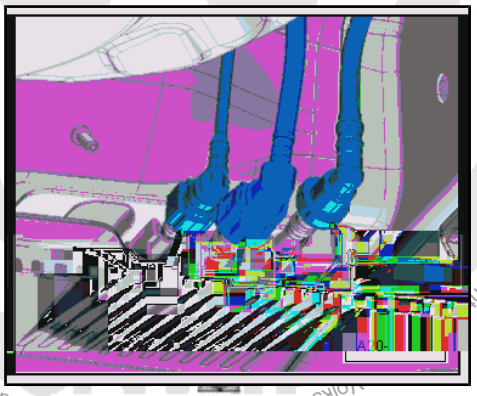

Protected by copyright. Copying for private or commercial purposes, in part or in whole, is not permitted unless authorised by Volkswagen AG. Volkswagen AG does not guarantee or accept any liability with respect to the correctness of information in this document.

– Press the lever -2- on the brake caliper in the direction of the -arrow- and disengage the brake cable -1-.
– Press the tabs -3- together and remove the brake cable from the bracket -4- on the brake caliper.

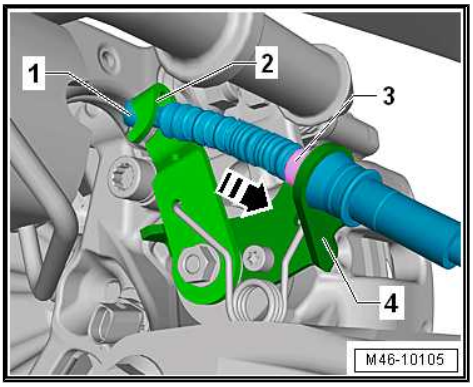

– Unclip the parking brake cable -4- from the bracket -arrow A-.
– Pull the parking brake cable out of the guide -arrow B- on the bracket -3-.
– Remove the bolts -2- and pivot the trailing arm -1- downward.

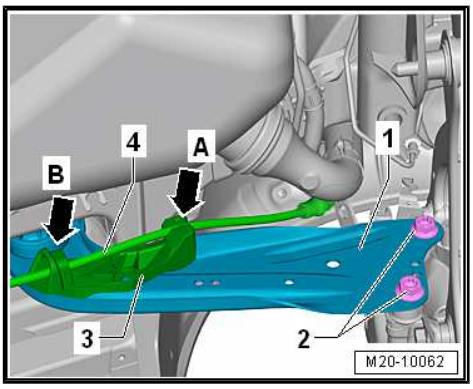

– Remove the bolt -4-.
– Remove the bracket for the exhaust system.
– Remove the bolt -2- and remove the mounting strap.

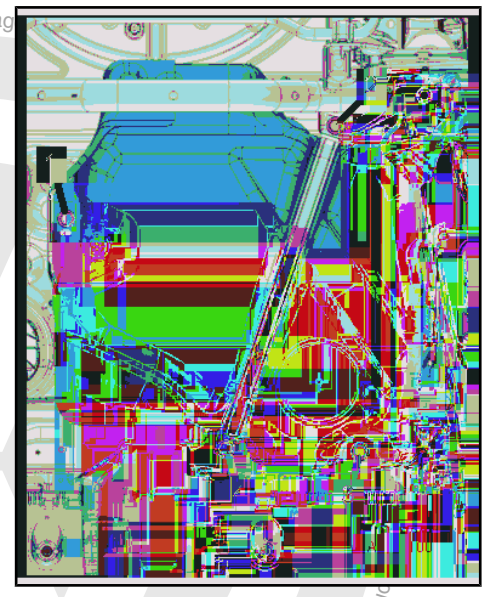

– Place the -VAS6931- under the fuel tank for support.

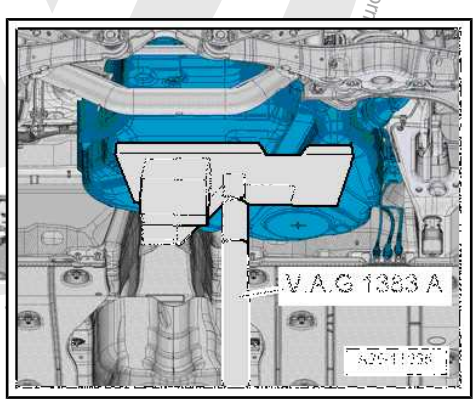

Protected by copyright. Copying for private or commercial purposes, in part or in whole, is not permitted unless authorised by Volkswagen AG. Volkswag

– Remove the bolts -1 and 3-.

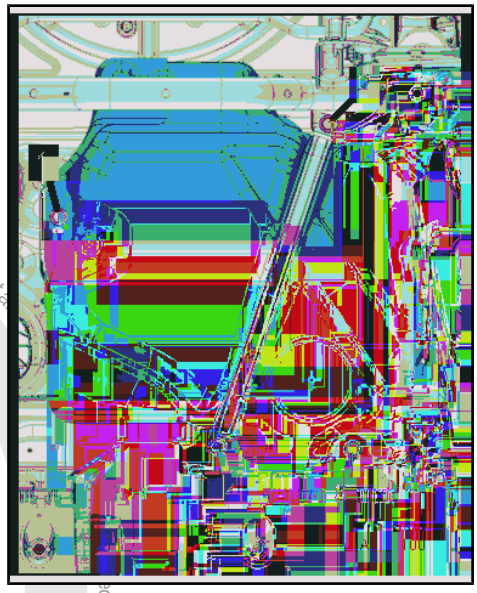

Note

- *To improve clarity, the fuel tank is shown without the -VAS6931- .*
- *A second technician is required to remove the fuel tank.*

– Lower the fuel tank using the -VAS6931- .

– By turning it accordingly, lower the fuel tank sideways.

– Pay attention to the lines to the EVAP canister, unclipping them if necessary.

– Guide the filler neck out between the rear axle and the body.

Installing

Install in reverse order of removal. Note the following:

– Guide the filler neck between the rear axle and the body.

Note

Disconnect the connector couplings. Refer to
⇒ "4.1 Connector Couplings, Disconnecting", page 62 .

– If equipped, make sure the Metering Pump - V54- is seated securely on the bracket.

– Make sure to guide the fuel filler neck correctly into the opening in the body.

– Make sure the vent and fuel lines are routed without kinks.

– Make sure the supply, return and breather lines are still clipped to the fuel tank after the fuel tank has been installed.

– Position the fuel tank together with the mounting strap on the underbody using the -VAS6931- .

– Note the correct installation location for the exhaust system bracket. Refer to ⇒ Rep. Gr. 26 ; Exhaust Pipes/Muffler; Overview - Muffler .

– Note the location of the mounting strap.

– Make sure the line connections are secure.

– Check the fit by pulling on it.

Protected by copyright. Copyright by Volkswagen AG. Volkswagen AG does not guarantee or accept any liability with respect to the correctness of information in this document. Copying for private or commercial purposes, in part or in whole, is not permitted unless authorised by Volkswagen AG.

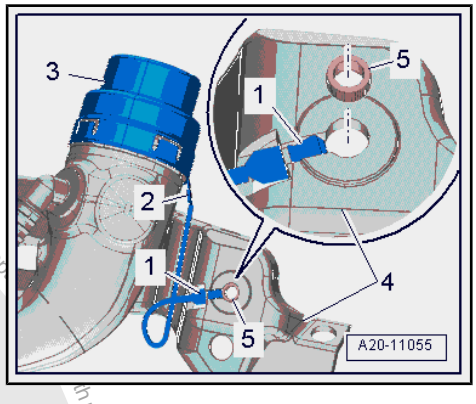

– Check the ground cable for traces of oxidation on the connectors. Remove any oxidation if necessary.

– Check the installation position of the ground connection.

• The connector -2- must be securely attached to the metal ring -3-.

• The contact -1- must be engaged in the fuel tank -4- and secured with the spacer -5-.

– Check the metal ring connection on the fuel filler neck to a bare area on the body with an ohmmeter.

• Specified value is approximately 0 ohm.

• If the specified values is incorrect, then there is a risk of explosion due to electrostatic discharge.

– Fill at least five liters of fuel in the fuel tank.

WARNING

There is a risk of the fuel tank exploding! After installing a new or completely emptied fuel tank, fill it immediately with a minimum of five liters of fuel. Do not allow the fuel pump to run when the fuel tank is completely empty.

Tightening Specifications

◆ Refer to
⇒ “1.1.1 Overview - Fuel Tank, Vehicles with Multi-Link Rear Axle and FWD”, page 6

◆ Refer to ⇒ Body Interior; Rep. Gr. 72 ; Rear Seats; Bench Seat / Single Seats, Removing and Installing .

◆ Refer to ⇒ Rep. Gr. 26 ; Exhaust Pipes/Mufflers; Overview - Muffler .

◆ Refer to ⇒ Body Exterior; Rep. Gr. 55 ; Fuel Filler Door Unit; Fuel Filler Door Unit, Removing and Installing .

◆ Refer to ⇒ Body Exterior; Rep. Gr. 66 ; Underbody Trim Panel .

◆ Refer to ⇒ Suspension, Wheels, Steering; Rep. Gr. 42 ; Wheel Bearing, Trailing Arm; Overview - Trailing Arm .

1.2.2 Fuel Tank, Removing and Installing, Vehicles with Multi-Link Rear Axle and Leak Detection-Fuel Tank

Special tools and workshop equipment required

◆ Torque Wrench 1331 5-50Nm - VAG1331-

◆ Trim Removal Wedge - 3409-

◆ Engine and Gearbox Jack - VAS6931-

◆ Torque Wrench 1332 40-200Nm - VAG1332-

Removing

– Observe the safety instructions. Refer to
⇒ “1 Safety Precautions”, page 1 .

– Follow the guidelines for clean working conditions. Refer to
⇒ “3.1 Parking/Auxiliary Heater and Fuel System Clean Working Conditions”, page 4 .

– Move the front seats all the way forward.

– Switch off the ignition.

– Remove the rear bench seat. Refer to ⇒ Body Interior; Rep. Gr. 72 ; Rear Seats; Bench Seat / Single Seats, Removing and Installing .

– Drain the fuel tank. Refer to ⇒ “1.3 Fuel Tank, Draining”, page 35 .

– Unclip the sealing flange cover -1- at the tabs -arrows- using the -3409- .

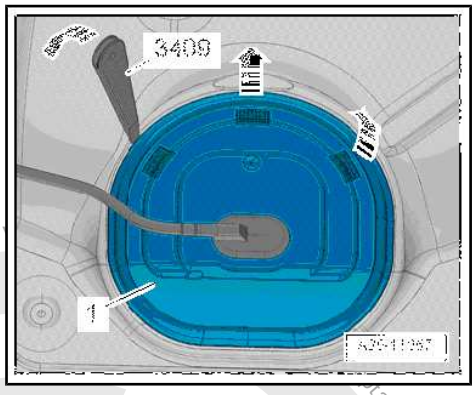

– Unclip the grommet -1- downward out of the cover -2-.

– Guide the cover -2- on the wiring harness -3- toward the rear.

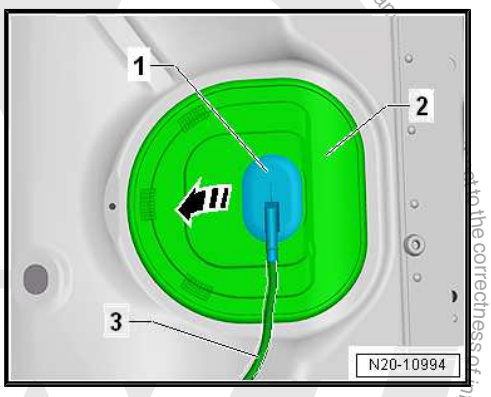

– Unlock and disconnect the connector -1- from the sealing flange.

– If equipped, disengage the connector -2- for the parking heater Metering Pump - V54- on the sealing flange and move it to the side.

– Disconnect the connector -2-.

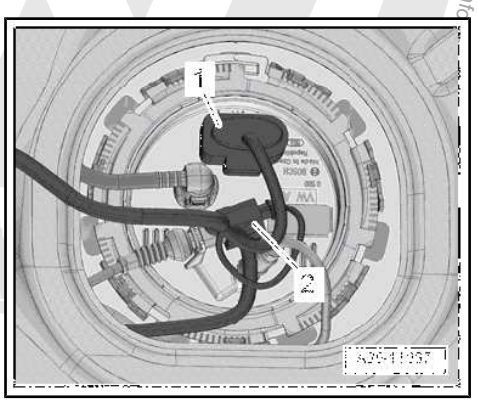

– Lift the tab -2- in the direction of the -arrow A- by using a finger to reach between the floor panel and the fuel tank.

– At the same time, carefully pull the Fuel Pump Control Module - J538- -1- out of the mount at the wiring harness -3- in the direction of the -arrow B-.

– Remove the Fuel Pump Control Module - J538- toward the inside between the fuel tank and the floor panel.

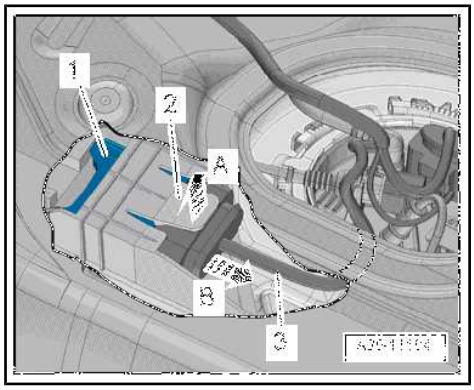

Protected by copyright. Copying for private or commercial purposes, in part or in whole, is not permitted unless authorised by Volkswagen AG.

– Open the fuel filler door unit -2-.
– Clean the area around the fuel filler neck.
– Remove the cap -1- for the fuel filler neck.

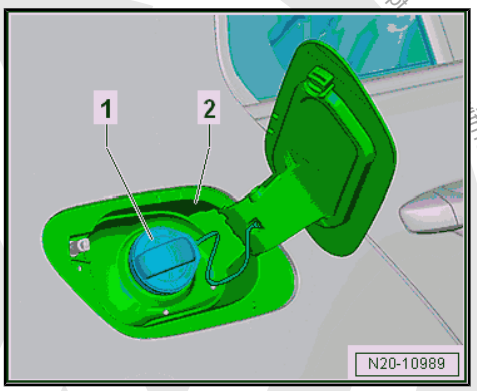

Note

Seal the fuel filler neck opening with a clean plug to prevent any dirt from getting in.

– Remove the fuel filler door unit -2-. Refer to ⇒ Body Exterior; Rep. Gr. 55 ; Fuel Filler Door Unit; Fuel Filler Door Unit, Removing and Installing .
– Remove the right rear wheel. Refer to ⇒ Suspension, Wheels, Steering; Rep. Gr. 44 ; Wheels, Tires; Changing a Wheel .
– Remove the right rear wheel housing liner. Refer to ⇒ Body Exterior; Rep. Gr. 66 ; Wheel Housing Liner; Overview - Rear Wheel Housing Liner .
– Remove the rear underbody trim panel. Refer to ⇒ Body Exterior; Rep. Gr. 66 ; Underbody Trim Panel; Underbody Trim Panels, Removing and Installing .

– Remove the fuel filler neck bolts -1 and 2-.

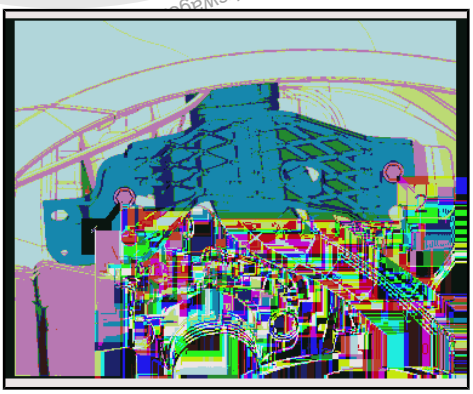

– Remove the breather lines -2 and 3- from the EVAP Canister.

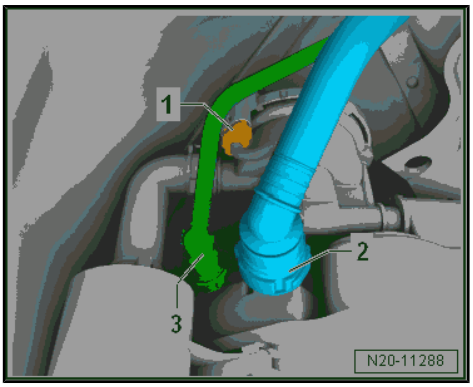

Protected by copyright. Copying for private or commercial purposes, in part or in whole, is not permitted unless authorised by Volkswagen AG. Volkswagen AG does not guarantee or accept any liability with respect to the correctness of information in this document. Copyright by Volkswagen AG.

– Release the connector -arrow- and remove.

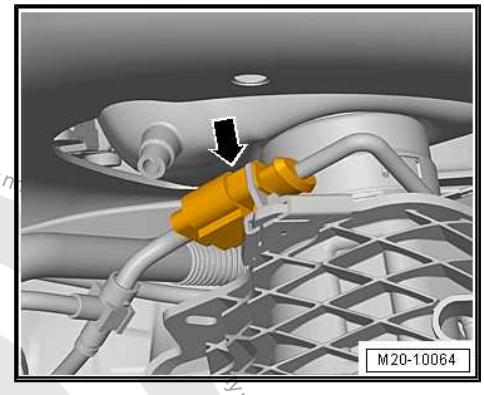

– Unclip the wiring harness -1- from the brackets -arrows-.

– Remove the exhaust system rear section. Refer to ⇒ Rep. Gr. 26 ; Exhaust Pipes/Mufflers; Muffler, Removing and Installing .

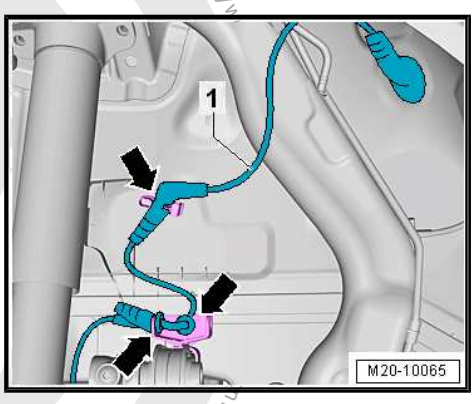

– Remove the fuel line -1- from the underbody. Disconnect the connector couplings. Refer to
⇒ “4.1 Connector Couplings, Disconnecting”, page 62 .

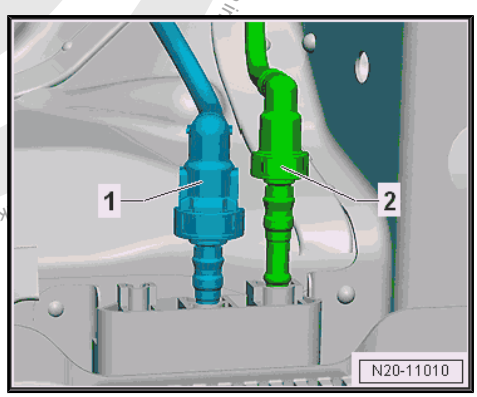

WARNING

The fuel line is under pressure.

Fuel poses a risk of injury to the eyes and skin.

Wear protective eyewear and protective clothing to avoid injury and contact with skin. Place a cleaning cloth around the connection point before loosening hose connections. Carefully open the connection point to release the pressure.

– Disconnect the breather line -2-. Disconnect the connector couplings. Refer to
⇒ “4.1 Connector Couplings, Disconnecting”, page 62 .

– If equipped, remove the rear underbody trim panel. Refer to ⇒ Body Exterior; Rep. Gr. 66 ; Underbody Trim Panel; Underbody Trim Panels, Removing and Installing .

– Press the lever -2- on the brake caliper in the direction of the -arrow- and disengage the brake cable -1-.

– Press the tabs -3- together and remove the brake cable from the bracket -4- on the brake caliper.

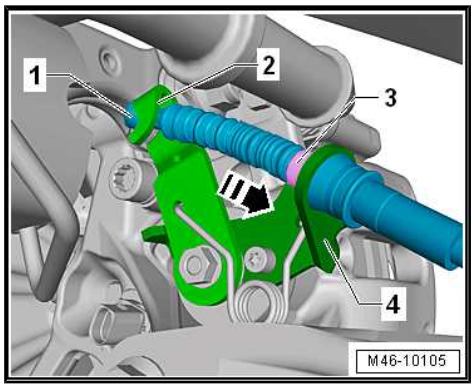

Protected by copyright. Copying for private or commercial purposes, in part or in whole, is not permitted unless authorised by Volkswagen AG. Volkswagen AG does n

Protected by copyright. Copying for private or commercial purposes, in part or in whole, is not permitted unless authorised by Volkswagen AG. Volkswagen AG does not guarantee or accept any liability with respect to the correctness of information in this document. Copyright by Volkswagen AG.

– Unclip the parking brake cable -4- from the bracket -arrow A-.
– Pull the parking brake cable out of the guide -arrow B- on the bracket -3-.
– Remove the bolts -2- and pivot the trailing arm -1- downward.

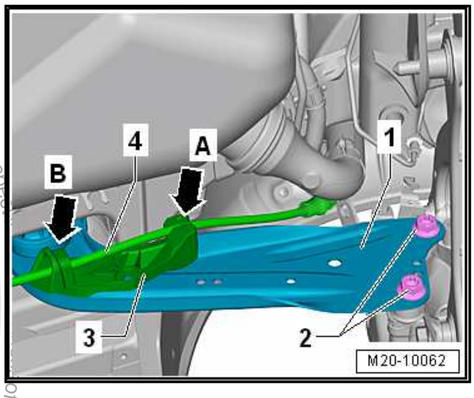

– Remove the bolt -4-.
– Remove the bracket for the exhaust system.
– Remove the bolt -2- and remove the mounting strap.

– Place the -VAS6931- under the fuel tank for support.

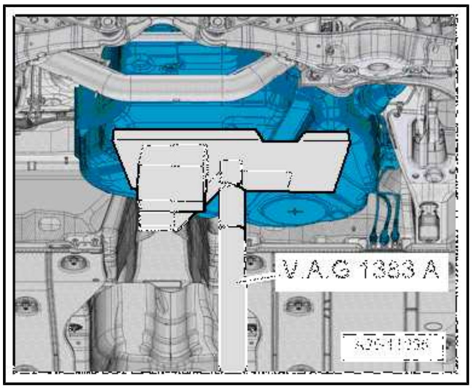

– Remove the bolts -1 and 3-.

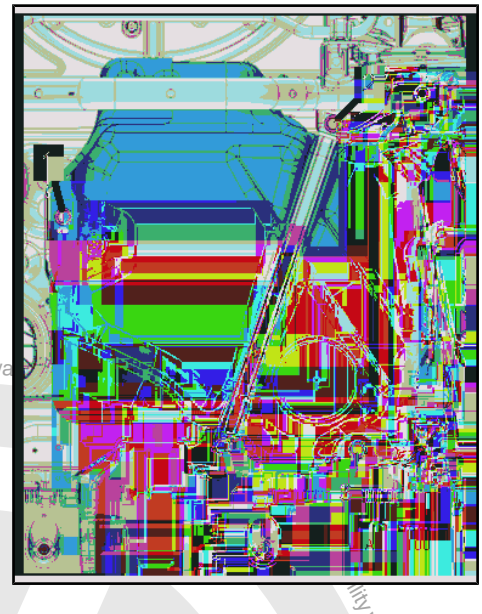

Note

- *To improve clarity, the fuel tank is shown without the -VAS6931- .*
- *A second technician is required to remove the fuel tank.*

– Lower the fuel tank using the -VAS6931- .

– By turning it accordingly, lower the fuel tank sideways.

– Pay attention to the lines to the EVAP canister, unclipping them if necessary.

– Guide the filler neck out between the rear axle and the body.

Installing

Install in reverse order of removal. Note the following:

– Guide the filler neck between the rear axle and the body.

Note

Disconnect the connector couplings. Refer to *⇒ "4.1 Connector Couplings, Disconnecting", page 62* .

– If equipped, make sure the Metering Pump - V54- is seated securely on the bracket.

– Make sure to guide the fuel filler neck correctly into the opening in the body.

– Make sure the vent and fuel lines are routed without kinks.

– Make sure the supply, return and breather lines are still clipped to the fuel tank after the fuel tank has been installed.

– Position the fuel tank together with the mounting strap on the underbody using the -VAS6931- .

– Note the correct installation location for the exhaust system bracket. Refer to ⇒ Rep. Gr. 26 ; Exhaust Pipes/Muffler; Overview - Muffler .

– Note the location of the mounting strap.

– Make sure the line connections are secure.

– Check the fit by pulling on it.

Protected by copyright. Copying for private or commercial purposes, in part or in whole, is not permitted unless authorised by Volkswagen AG. Volkswagen AG does not guarantee or accept any liability with respect to the correctness of information in this document. Copyright by Volkswagen AG.

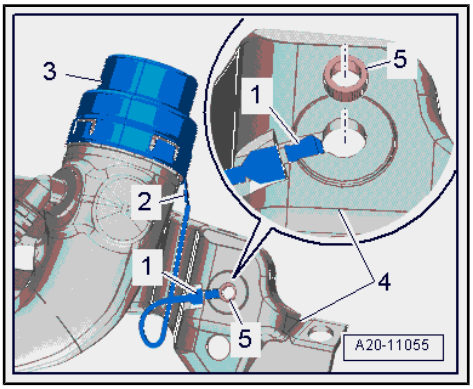

– Check the ground cable for traces of oxidation on the connectors. Remove any oxidation if necessary.

– Check the installation position of the ground connection.

- The connector -2- must be securely attached to the metal ring -3-.
- The contact -1- must be engaged in the fuel tank -4- and secured with the spacer -5-.

– Check the metal ring connection on the fuel filler neck to a bare area on the body with an ohmmeter.

- Specified value is approximately 0 ohm.
- If the specified values is incorrect, then there is a risk of explosion due to electrostatic discharge.

– Fill at least five liters of fuel in the fuel tank.

> **WARNING**
>
> ***There is a risk of the fuel tank exploding! After installing a new or completely emptied fuel tank, fill it immediately with a minimum of five liters of fuel. Do not allow the fuel pump to run when the fuel tank is completely empty.***

Tightening Specifications

- Refer to ⇒ “1.1.1 Overview - Fuel Tank, Vehicles with Multi-Link Rear Axle and FWD”, page 6
- Refer to ⇒ Body Interior; Rep. Gr. 72 ; Rear Seats; Bench Seat / Single Seats, Removing and Installing .
- Refer to ⇒ Rep. Gr. 26 ; Exhaust Pipes/Mufflers; Overview - Muffler .
- Refer to ⇒ Body Exterior; Rep. Gr. 55 ; Fuel Filler Door Unit; Fuel Filler Door Unit, Removing and Installing .
- Refer to ⇒ Body Exterior; Rep. Gr. 66 ; Underbody Trim Panel .
- Refer to ⇒ Suspension, Wheels, Steering; Rep. Gr. 42 ; Wheel Bearing, Trailing Arm; Overview - Trailing Arm .

1.2.3 Fuel Tank, Removing and Installing, Vehicles with Torsion Beam Rear Suspension

Special tools and workshop equipment required

- Trim Removal Wedge - 3409-
- Torque Wrench 1331 5-50Nm - VAG1331-
- Torque Wrench 1332 40-200Nm - VAG1332-
- Engine and Gearbox Jack - VAS6931-

Removing

– Observe the safety instructions. Refer to ⇒ “1 Safety Precautions”, page 1 .

– Follow the guidelines for clean working conditions. Refer to ⇒ “3.1 Parking/Auxiliary Heater and Fuel System Clean Working Conditions”, page 4 .

Protected by copyright. Copying for private or commercial purposes, in part or in whole is not permitted unless authorised by Volkswagen AG. Volkswagen AG does not guarantee or accept any liability with respect to the correctness of information in this document. Copyright by Volkswagen AG.

Volkswagen AG. Volkswagen AG does not guarantee or accept any liability with respect to the co

– Drain the fuel tank. Refer to
⇒ “1.3 Fuel Tank, Draining”, page 35 .

– Move the front seats all the way forward.

– Switch off the ignition.

Golf Sportsvan:

– Remove the right rear seat. Refer to ⇒ Body Interior; Rep. Gr. 72 ; Rear Seats; Bench Seat / Single Seat, Removing and Installing .

– Partially loosen the cover -1- in the carpet at the separating line -arrow-.

– Do not separate the cover completely from the carpet so that later it will be installed correctly.

– Only loosen so far that the cover can be folded up.

– Fold up the cover in the direction of the -arrow-.

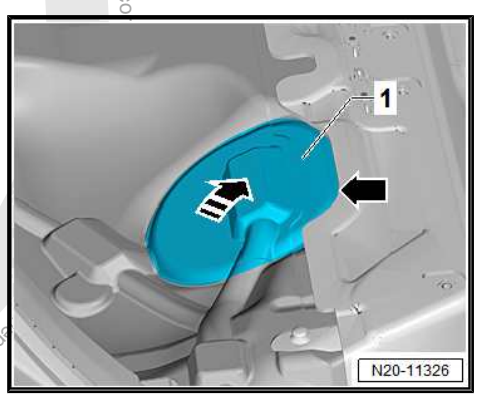

Golf and Golf Wagon:

– Remove the rear bench seat. Refer to ⇒ Body Interior; Rep. Gr. 72 ; Rear Seats; Bench Seat / Single Seats, Removing and Installing .

Continuation for All Vehicles:

– Unclip the sealing flange cover -1- at the tabs -arrows- using the -3409- .

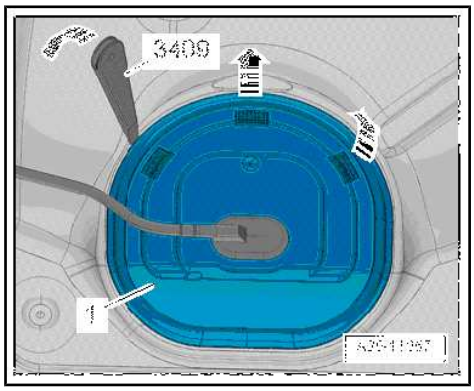

– Unclip the grommet -1- downward out of the cover -2-.

– Guide the cover -2- on the wiring harness -3- toward the rear.

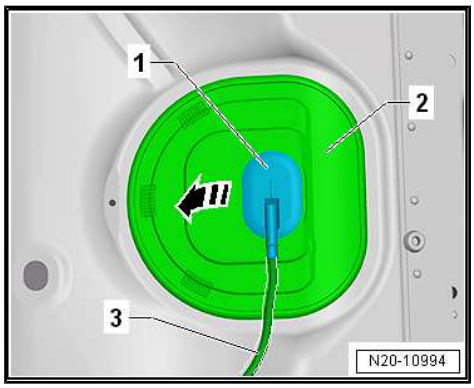

– Unlock and disconnect the connectors -1- from the sealing flange.
– If equipped, release the connector -2- for the Metering Pump - V54- and remove it.
– Disconnect the connector -2-.

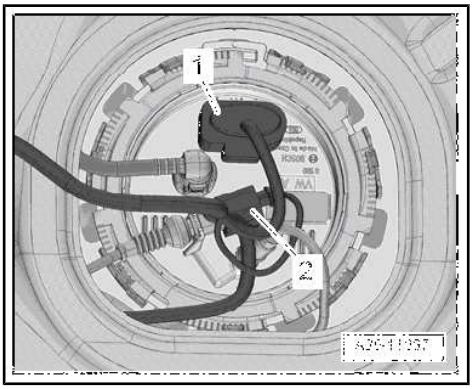

– Lift the tab -2- in the direction of the -arrow A-.
– To do so, reach a finger between the floor panel and the fuel tank.
– At the same time, carefully pull the Fuel Pump Control Module - J538- -1- out of the mount at the wiring harness -3- in the direction of the -arrow B-.
– Remove the Fuel Pump Control Module - J538- toward the inside between the fuel tank and the floor panel.

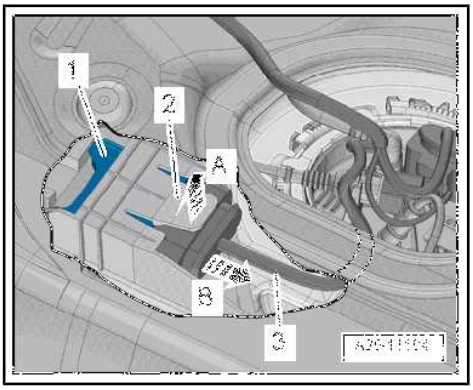

– Open the fuel filler door unit -2-.
– Clean the area around the fuel filler neck.
– Remove the cap -1- for the fuel filler neck.

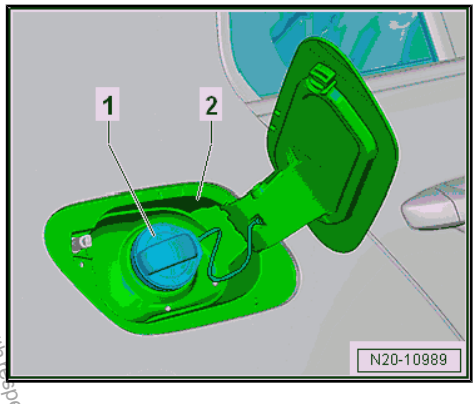

Note

Seal the fuel filler neck opening with a clean plug to prevent any dirt from getting in.

– Remove the fuel filler door unit -2-. Refer to ⇒ Body Exterior; Rep. Gr. 55 ; Fuel Filler Door Unit; Fuel Filler Door Unit, Removing and Installing .
– Remove the right rear wheel. Refer to ⇒ Suspension, Wheels, Steering; Rep. Gr. 44 ; Wheels, Tires; Changing a Wheel .
– Remove the right rear wheel housing liner. Refer to ⇒ Body Exterior; Rep. Gr. 66 ; Wheel Housing Liner; Overview - Rear Wheel Housing Liner .
– Remove the rear underbody trim panel. Refer to ⇒ Body Exterior; Rep. Gr. 66 ; Underbody Trim Panel; Underbody Trim Panels, Removing and Installing .

Protected by copyright. Copying for private or commercial purposes, in part or in whole, is not permitted unless authorised by Volkswagen AG. Volkswagen AG does not guarantee or accept any liability with respect to the correctness of information in this document. Copyright by Volkswagen AG.

– Disconnect the vent lines -1 and 2- from the EVAP canister. Disconnect the connector couplings. Refer to ⇒ “4.1 Connector Couplings, Disconnecting”, page 62 .

– Unclip the breather line from bracket -arrows-.

– Unclip the breather lines -1- at the bracket -arrow-.

– Remove the rear axle. Refer to ⇒ Suspension, Wheels, Steering; Rep. Gr. 42 ; Rear Axle; Rear Axle, Removing and Installing .

– Remove the exhaust system rear section. Refer to ⇒ Rep. Gr. 26 ; Exhaust Pipes/Mufflers; Overview - Muffler .

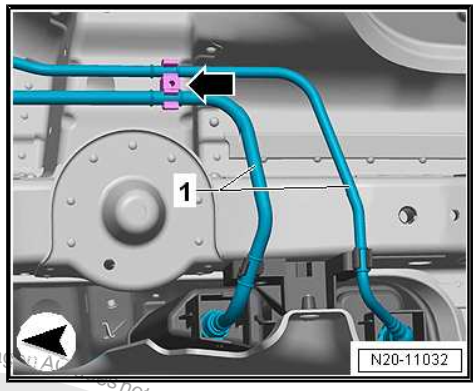

– Remove the fuel filler neck bolts -1 and 2-.

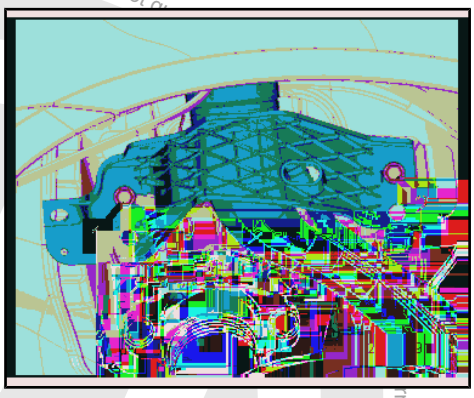

– Remove the fuel line -1- from the underbody. Disconnect the connector couplings. Refer to ⇒ “4.1 Connector Couplings, Disconnecting”, page 62 .

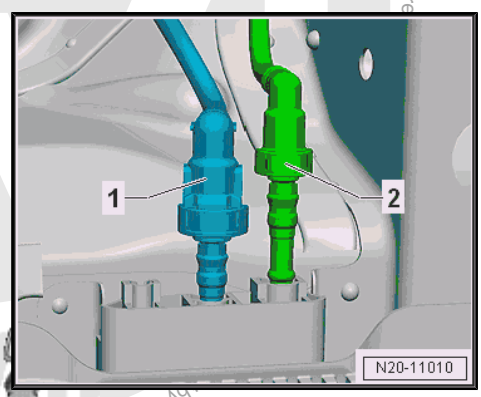

WARNING

The fuel line is under pressure.

Fuel poses a risk of injury to the eyes and skin.

Wear protective eyewear and protective clothing to avoid injury and contact with skin. Place a cleaning cloth around the connection point before loosening hose connections. Carefully open the connection point to release the pressure.

– Disconnect the breather line -2-. Disconnect the connector couplings. Refer to ⇒ “4.1 Connector Couplings, Disconnecting”, page 62 .

Protected by copyright. Copying, in part or in whole, is not permitted unless authorised by Volkswagen AG. Volkswagen AG does not guarantee the accuracy of this document, nor the accuracy of any other document, in part or in whole, is not permitted unless authorised by Volkswagen AG.

Vehicles with Parking Heater:

– Remove the fuel line -1- from the parking heater. Disconnect the connector couplings. Refer to ⇒ “4.1 Connector Couplings, Disconnecting”, page 62 .

– If equipped, remove the rear underbody trim panel. Refer to ⇒ Body Exterior; Rep. Gr. 66 ; Underbody Trim Panel; Underbody Trim Panels, Removing and Installing .

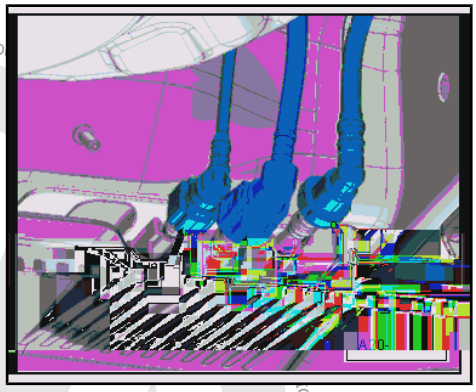

Continuation for All Vehicles:

– Remove the bolt -5-.

– Remove the bracket for the exhaust system -arrow-.

– Remove the bolt -3- and remove the mounting strap -7-.

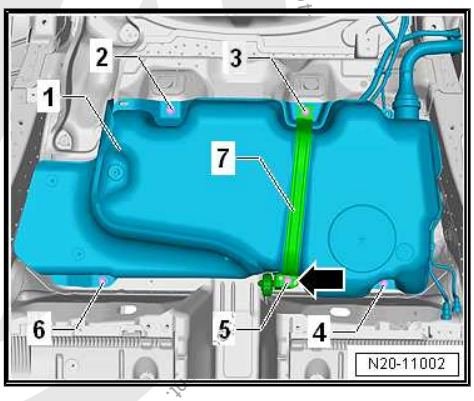

– Place the -VAS6931- under the fuel tank -1- to support it as illustrated.

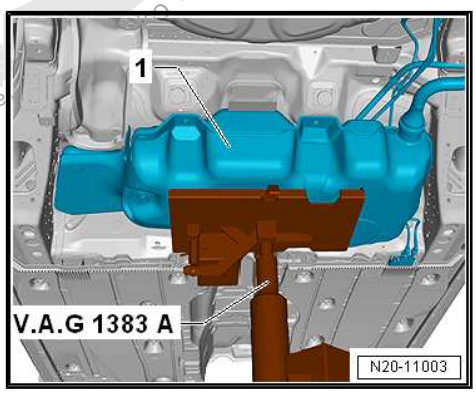

Protected by copyright. Copying for private or commercial purposes, in part or in whole, is not permitted unless authorised by Volkswagen AG. Volkswagen AG does not guarantee or accept any liability with respect to the correctness and completeness of this document.

– Remove the bolts -2, 4 and 6-.

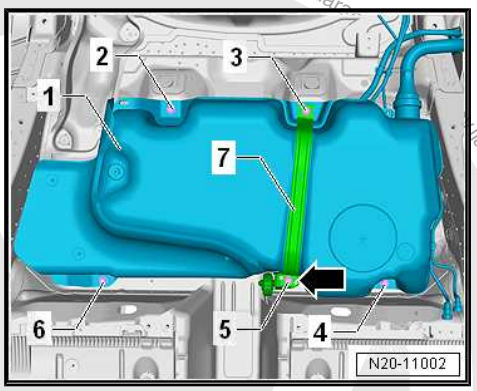

Note

- *To improve clarity, the fuel tank is shown without the -VAS6931- .*
- *A second technician is required to remove the fuel tank.*

– Lower the fuel tank -1- using the -VAS6931- .

Installing

Install in reverse order of removal. Note the following:

Note

Disconnect the connector couplings. Refer to *⇒ "4.1 Connector Couplings, Disconnecting", page 62* .

– If equipped, make sure the Metering Pump - V54- is seated securely.

– Make sure the vent and fuel lines are routed without kinks.

– Make sure to guide the fuel filler neck correctly into the opening in the body.

– Position the fuel tank together with the mounting strap on the underbody using the -VAS6931- .

– Note the location of the mounting strap.

– Make sure the supply, return and breather lines are still clipped to the fuel tank after the fuel tank has been installed.

– Note the correct installation location for the exhaust system bracket. Refer to ⇒ Rep. Gr. 26 ; Exhaust Pipes/Muffler; Overview - Muffler .

– Make sure the line connections are secure.

– Check the fit by pulling on it.

Protected by copyright. Copying for private or commercial purposes in part or in whole, is not permitted unless authorised by Volkswagen AG. Volkswagen AG does not guarantee or accept any liability with respect to the correctness of information in this document. Copyright by Volkswagen AG.

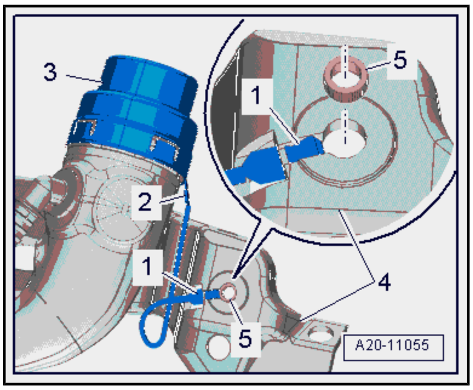

– Check the ground cable for traces of oxidation on the connectors. Remove any oxidation if necessary.

– Check the installation position of the ground connection.

• The connector -2- must be securely attached to the metal ring -3-.

• The contact -1- must be engaged in the fuel tank -4- and secured with the spacer -5-.

– Check the metal ring connection on the fuel filler neck to a bare area on the body with an ohmmeter.

• Specified value is approximately 0 ohm.

• If the specified values is incorrect, then there is a risk of explosion due to electrostatic discharge.

– Fill at least five liters of fuel in the fuel tank.

> WARNING
>
> *There is a risk of the fuel tank exploding! After installing a new or completely emptied fuel tank, fill it immediately with a minimum of five liters of fuel. Do not allow the fuel pump to run when the fuel tank is completely empty.*

Tightening Specifications

♦ Refer to ⇒ “1.1.2 Overview - Fuel Tank, Vehicles with FWD and Torsion Beam Rear Suspension”, page 8

♦ Refer to ⇒ Body Interior; Rep. Gr. 72 ; Rear Seats; Bench Seat / Single Seats, Removing and Installing .

♦ Refer to ⇒ Rep. Gr. 26 ; Exhaust Pipes/Mufflers; Overview - Muffler .

♦ Refer to ⇒ Body Exterior; Rep. Gr. 55 ; Fuel Filler Door Unit; Fuel Filler Door Unit, Removing and Installing .

♦ Refer to ⇒ Suspension, Wheels and Steering; Rep. Gr. 42 ; Rear Axle; Rear Axle, Removing and Installing .

♦ Refer to ⇒ Body Exterior; Rep. Gr. 66 ; Underbody Trim Panel .

1.2.4 Fuel Tank, Removing and Installing, Vehicles with Torsion Beam Rear Suspension and Engine Code CWVA

Special tools and workshop equipment required

♦ Trim Removal Wedge - 3409-

♦ Torque Wrench 1331 5-50Nm - VAG1331-

♦ Torque Wrench 1332 40-200Nm - VAG1332-

♦ Engine and Gearbox Jack - VAS6931-

Removing

– Observe the safety instructions. Refer to ⇒ “1 Safety Precautions”, page 1 .

– Follow the guidelines for clean working conditions. Refer to ⇒ “3.1 Parking/Auxiliary Heater and Fuel System Clean Working Conditions”, page 4 .

Protected by copyright. Copying for private or commercial purposes, in part or in whole, is not permitted unless authorised by Volkswagen AG. Volkswagen AG does not guarantee or accept any liability with respect to the correctness of information in this document. Copyright by Volkswagen AG.

– Drain the fuel tank. Refer to
⇒ “1.3 Fuel Tank, Draining”, page 35 .

– Move the front seats all the way forward.

– Switch off the ignition.

Golf Sportsvan:

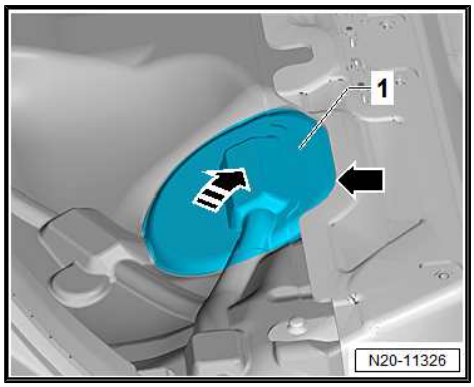

– Remove the right rear seat. Refer to ⇒ Body Interior; Rep. Gr. 72 ; Rear Seats; Bench Seat / Single Seat, Removing and Installing .

– Partially loosen the cover -1- in the carpet at the separating line -arrow-.

– Do not separate the cover completely from the carpet so that later it will be installed correctly.

– Only loosen so far that the cover can be folded up.

– Fold up the cover in the direction of the -arrow-.

Golf and Golf Wagon:

– Remove the rear bench seat. Refer to ⇒ Body Interior; Rep. Gr. 72 ; Rear Seats; Bench Seat / Single Seats, Removing and Installing .

Continuation for All Vehicles:

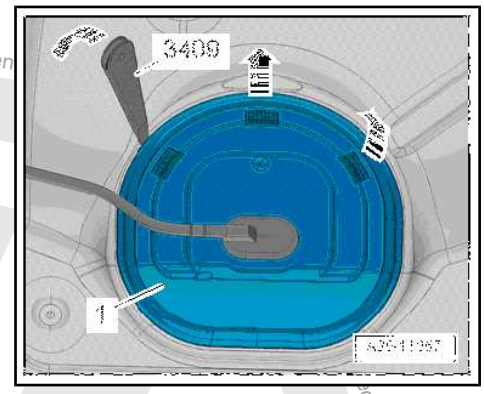

– Unclip the sealing flange cover -1- at the tabs -arrows- using the Trim Removal Wedge - 3409- .

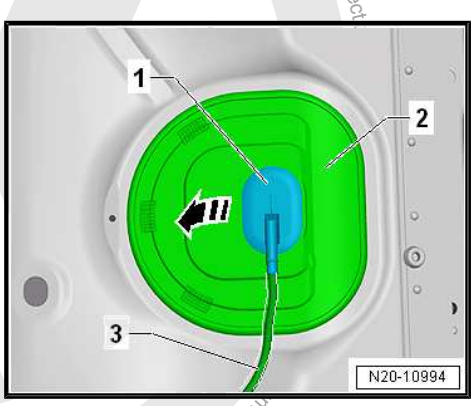

– Unclip the grommet -1- downward out of the cover -2-.

– Guide the cover -2- on the wiring harness -3- toward the rear.

Protected by copyright. Copying for private or commercial purposes, in part or in whole, is not permitted unless authorised by Volkswagen AG. Volkswagen AG. Copyright by Volkswagen AG.

– Release and disconnect the connector -arrow-.

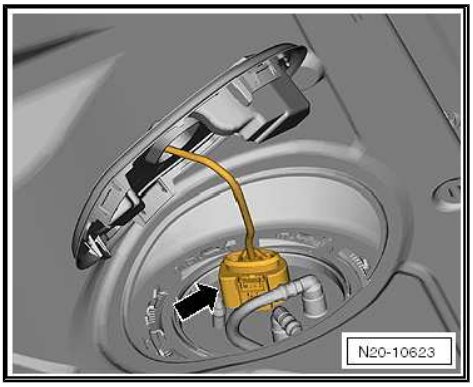

– Open the fuel filler door unit -2-.
– Clean the area around the fuel filler neck.
– Remove the cap -1- for the fuel filler neck.

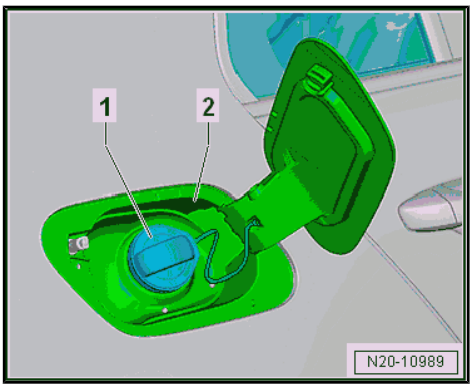

Note

Seal the fuel filler neck opening with a clean plug to prevent any dirt from getting in.

– Remove the fuel filler door unit -2-. Refer to ⇒ Body Exterior; Rep. Gr. 55 ; Fuel Filler Door Unit; Fuel Filler Door Unit, Removing and Installing .
– Remove the right rear wheel. Refer to ⇒ Suspension, Wheels, Steering; Rep. Gr. 44 ; Wheels, Tires; Changing a Wheel .
– Remove the right rear wheel housing liner. Refer to ⇒ Body Exterior; Rep. Gr. 66 ; Wheel Housing Liner; Overview - Rear Wheel Housing Liner .
– Remove the rear underbody trim panel. Refer to ⇒ Body Exterior; Rep. Gr. 66 ; Underbody Trim Panel; Underbody Trim Panels, Removing and Installing .
– Disconnect the vent lines -1- and -2- from the EVAP canister. Disconnect the connector couplings. Refer to ⇒ “4.1 Connector Couplings, Disconnecting”, page 62 .
– Unclip the breather line from bracket -arrows-.

Protected by copyright. Copying for private or commercial purposes, in part or in whole, is not permitted unless authorised by Volkswagen AG. Volkswagen AG does not guarantee or accept any liability with respect to the correctness of information in this document. Copyright by Volkswagen AG.

– Unclip the breather lines -1- at the bracket -arrow-.

– Remove the rear axle. Refer to ⇒ Suspension, Wheels, Steering; Rep. Gr. 42 ; Rear Axle; Rear Axle, Removing and Installing .

– Remove the exhaust system rear section. Refer to ⇒ Rep. Gr. 26 ; Exhaust Pipes/Mufflers; Overview - Muffler .

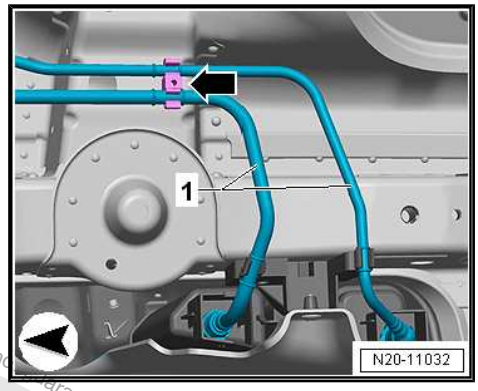

– Remove the fuel filler neck bolts -1 and 2-.

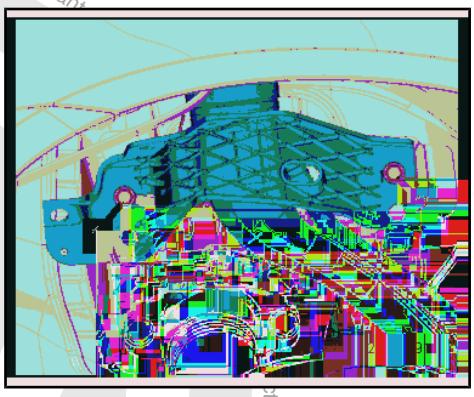

– Remove the fuel line -1- from the underbody. Disconnect the connector couplings. Refer to
⇒ “4.1 Connector Couplings, Disconnecting”, page 62 .

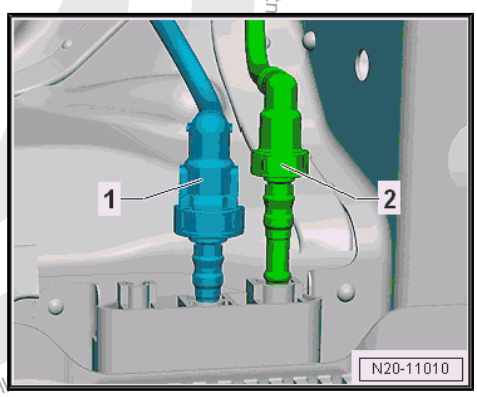

WARNING

The fuel line is under pressure.

Fuel poses a risk of injury to the eyes and skin.

Wear protective eyewear and protective clothing to avoid injury and contact with skin. Place a cleaning cloth around the connection point before loosening hose connections. Carefully open the connection point to release the pressure.

– Disconnect the breather line -2-. Disconnect the connector couplings. Refer to
⇒ “4.1 Connector Couplings, Disconnecting”, page 62 .

Vehicles with Parking Heater:

– Remove the fuel line -1- from the parking heater. Disconnect the connector couplings. Refer to
⇒ “4.1 Connector Couplings, Disconnecting”, page 62 .

– If equipped, remove the rear underbody trim panel. Refer to ⇒ Body Exterior; Rep. Gr. 66 ; Underbody Trim Panel; Underbody Trim Panels, Removing and Installing .

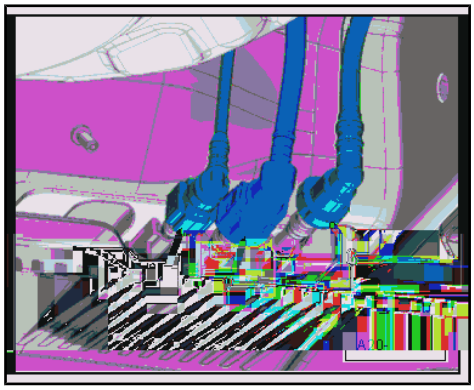

Protected by copyright. Copying, in part or in whole, is not permitted unless authorised by Volkswagen AG. Volkswagen AG does not guarantee

Protected by copyright. Copying for private or commercial purposes, in part or in whole is not permitted unless authorised by Volkswagen AG. Volkswagen AG does not guarantee or accept any liability with respect to the correctness and completeness of this document.

Continuation for All Vehicles:

– Remove the bolt -5-.

– Remove the bracket for the exhaust system -arrow-.

– Remove the bolt -3- and remove the mounting strap -7-.

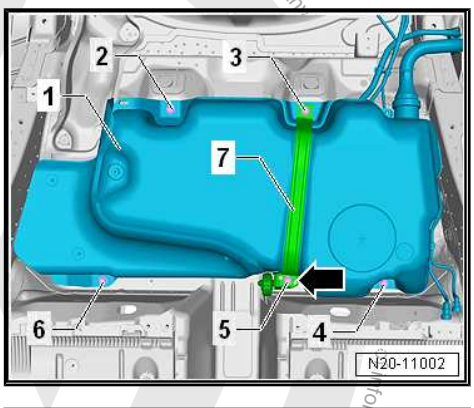

– Place the -VAS6931- under the fuel tank -1- to support it as illustrated.

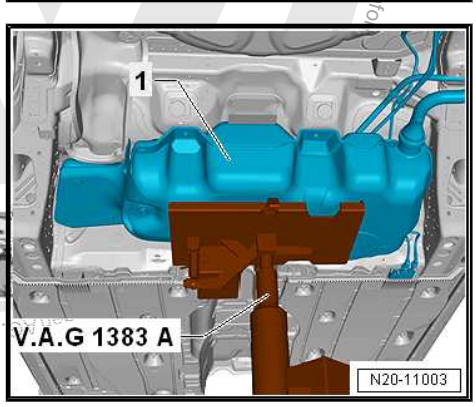

– Remove the bolts -2, 4 and 6-.

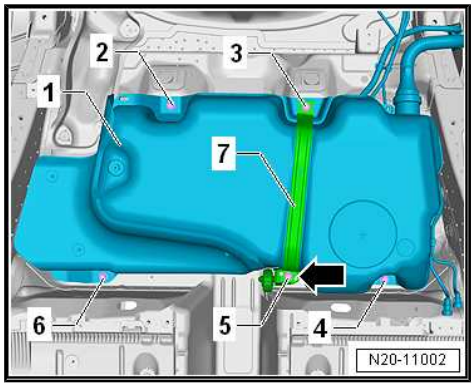

Note

- *To improve clarity, the fuel tank is shown without the -VAS6931- .*
- *A second technician is required to remove the fuel tank.*

– Lower the fuel tank -1- using the -VAS6931- .

Installing

Install in reverse order of removal. Note the following:

Note

Disconnect the connector couplings. Refer to *⇒ "4.1 Connector Couplings, Disconnecting", page 62* .

– If equipped, make sure the Metering Pump - V54- is seated securely.

– Make sure the vent and fuel lines are routed without kinks.

– Make sure to guide the fuel filler neck correctly into the opening in the body.

– Position the fuel tank together with the mounting strap on the underbody using the -VAS6931- .

– Note the location of the mounting strap.

– Make sure the supply, return and breather lines are still clipped to the fuel tank after the fuel tank has been installed.

– Note the correct installation location for the exhaust system bracket. Refer to ⇒ Rep. Gr. 26 ; Exhaust Pipes/Muffler; Overview - Muffler .

– Make sure the line connections are secure.

– Check the fit by pulling on it.

Protected by copyright. Copying for private or commercial purposes, in part or in whole, is not permitted unless authorised by Volkswagen AG. Volkswagen AG does not guarantee or accept any liability with respect to the correctness of information in this document. Copyright by Volkswagen AG.

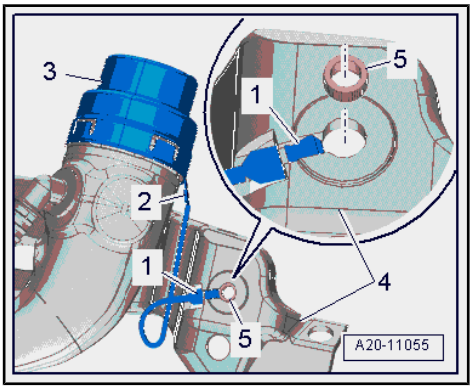

– Check the ground cable for traces of oxidation on the connectors. Remove any oxidation if necessary.

– Check the installation position of the ground connection.

- The connector -2- must be securely attached to the metal ring -3-.
- The contact -1- must be engaged in the fuel tank -4- and secured with the spacer -5-.

– Check the metal ring connection on the fuel filler neck to a bare area on the body with an ohmmeter.

- Specified value is approximately 0 ohm.
- If the specified values is incorrect, then there is a risk of explosion due to electrostatic discharge.

– Fill at least five liters of fuel in the fuel tank.

> **WARNING**
>
> ***There is a risk of the fuel tank exploding! After installing a new or completely emptied fuel tank, fill it immediately with a minimum of five liters of fuel. Do not allow the fuel pump to run when the fuel tank is completely empty.***

Tightening Specifications

- ♦ Refer to ⇒ "1.1.2 Overview - Fuel Tank, Vehicles with FWD and Torsion Beam Rear Suspension", page 8
- ♦ Refer to ⇒ Body Interior; Rep. Gr. 72 ; Rear Seats; Bench Seat / Single Seats, Removing and Installing .
- ♦ Refer to ⇒ Rep. Gr. 26 ; Exhaust Pipes/Mufflers; Overview - Muffler .
- ♦ Refer to ⇒ Body Exterior; Rep. Gr. 55 ; Fuel Filler Door Unit; Fuel Filler Door Unit, Removing and Installing .
- ♦ Refer to ⇒ Suspension, Wheels and Steering; Rep. Gr. 42 ; Rear Axle; Rear Axle, Removing and Installing .
- ♦ Refer to ⇒ Body Exterior; Rep. Gr. 66 ; Underbody Trim Panel .

1.3 Fuel Tank, Draining

⇒ "1.3.1 Fuel Tank, Draining with Fuel Pump Installed", page 35 .

⇒ "1.3.2 Fuel Tank, Emptying with Fuel Pump Installed, Vehicles with Engine Code CWVA", page 38

⇒ "1.3.3 Fuel Tank, Draining When More than 3/4 Full", page 43

⇒ "1.3.4 Fuel Tank, Draining When Less Than 3/4 Full", page 44

⇒ "1.3.5 Fuel Tank less than 3/4 Full, Emptying, Vehicles with Engine Code CWVA", page 47

1.3.1 Fuel Tank, Draining with Fuel Pump Installed

Special tools and workshop equipment required

- ♦ Trim Removal Wedge - 3409-

Protected by copyright. Copying for private or commercial purposes, in part or in whole, is not permitted unless authorised by Volkswagen AG. Volkswagen AG does not guarantee or accept any liability with respect to the correctness of information in this document. Copyright by Volkswagen AG.

- Connector Test Set - VAG1594D-
- Injection Rate Comparison Meter Kit - Remote Cable - VAG1348/3A-
- Vehicle Diagnostic Tester - Test Adapter - 5 Pin - VAS5565-
- Fuel Extractor VAS5190A - VAS5190-
- Fuel Extraction Unit - VAS5190A- (not illustrated) for E 85 - fuel.
- Fuel Extraction Adapter - VAS5190-

Note

Use only the -VAS5190A- when extracting E 85 - fuel!

Note

If the -VAS5190- has a suction hose with a mounted tip, then replace this with one that has a tip which screws on.

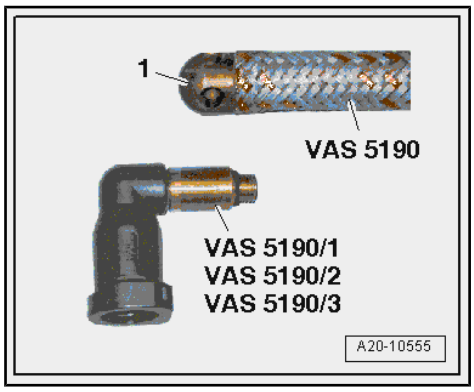

– Observe the safety instructions. Refer to ⇒ “1 Safety Precautions”, page 1 .

– Follow the guidelines for clean working conditions. Refer to ⇒ “3.1 Parking/Auxiliary Heater and Fuel System Clean Working Conditions”, page 4 .

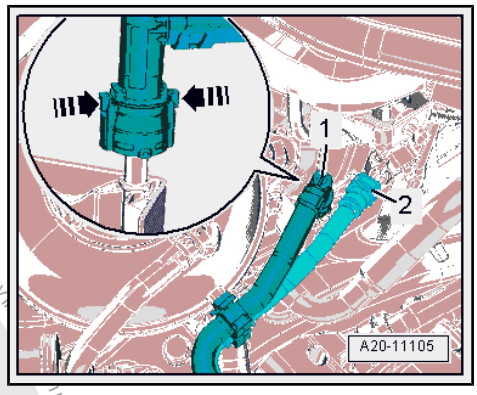

– Disconnect the fuel supply line -1-. Disconnect the connector couplings. Refer to ⇒ “4.1 Connector Couplings, Disconnecting”, page 62 .

WARNING

The fuel line is under pressure.

Fuel poses a risk of injury to the eyes and skin.

Wear protective eyewear and protective clothing to avoid injury and contact with skin. Place a cleaning cloth around the connection point before loosening hose connections. Carefully open the connection point to release the pressure.

– Collect leaking fuel with a cleaning cloth.

Protected by copyright. Copying for private or commercial purposes, in part or in whole, is not permitted unless authorised by Volkswagen AG. Volkswagen AG does not guarantee or accept any liability with respect to the correctness of information in this document. Copyright by Volkswagen AG.

– Connect the -VAS 5190- and -VAS5190 /3- to the fuel supply line.

– Attach the ground wire of the -VAS5190A- to a bare area on the body.

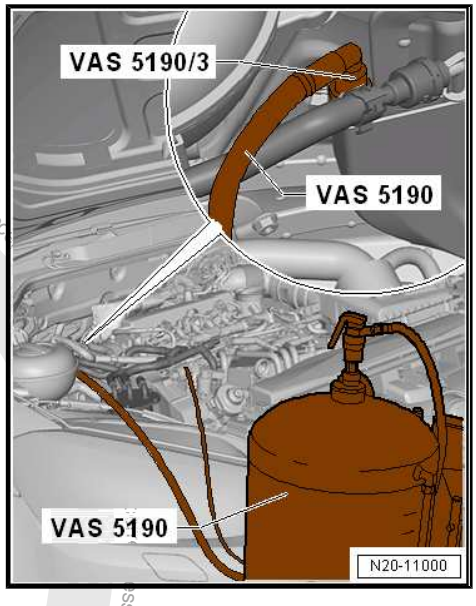

Golf Sportsvan:

– Remove the right rear seat. Refer to ⇒ Body Interior; Rep. Gr. 72 ; Rear Seats; Bench Seat / Single Seat, Removing and Installing .

– Partially loosen the cover -1- in the carpet at the separating line -arrow-.

– Do not separate the cover completely from the carpet so that later it will be installed correctly.

– Only loosen so far that the cover can be folded up.

– Fold up the cover in the direction of the -arrow-.

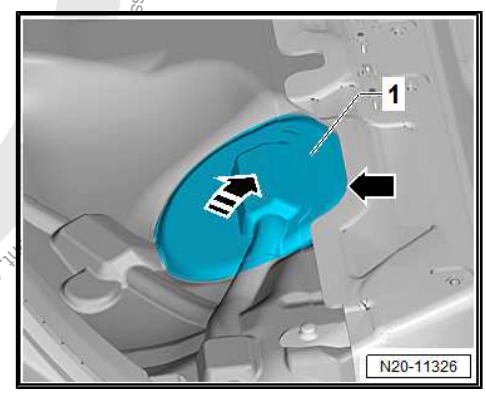

Golf and Golf wagon:

– Remove the rear bench seat. Refer to ⇒ Body Interior; Rep. Gr. 72 ; Rear Seats; Bench Seat / Single Seats, Removing and Installing .

Continuation for All Vehicles:

– Unclip the sealing flange cover -1- at the tabs -arrows- using the -3409- .

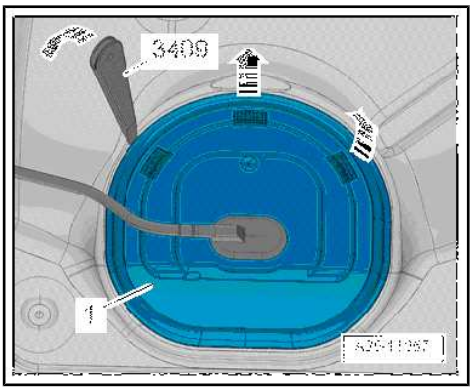

– Unclip the grommet -1- downward out of the cover -2-.

– Guide the cover -2- on the wiring harness -3- toward the rear.

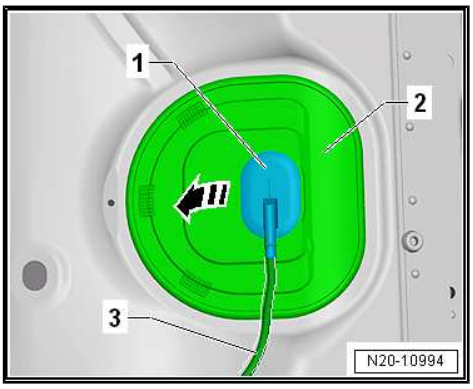

Protected by copyright. Copyright by Volkswagen AG. Volkswagen AG does not guarantee or accept any liability for the use of this document. Copyright by Volkswagen AG.

– Unlock and disconnect the connector -1- from the sealing flange.

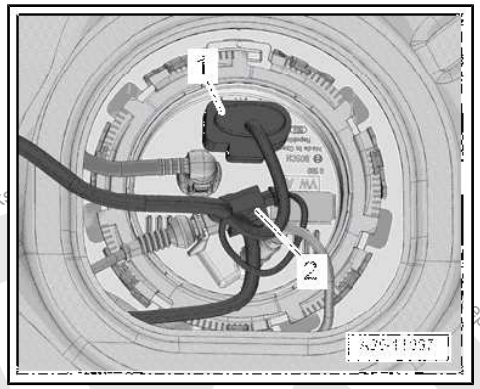

– Connect the -VAS5565- to the fuel delivery unit -1-.
– Connect the -VAG1348/3A- to the -VAS5565- and the battery positive terminal clamp in the engine compartment.
– Connect the connection -5- (yellow) on the -VAS5565- to the battery negative terminal using suitable service equipment-3-.
– To do so, use the -VAG1594D- also.

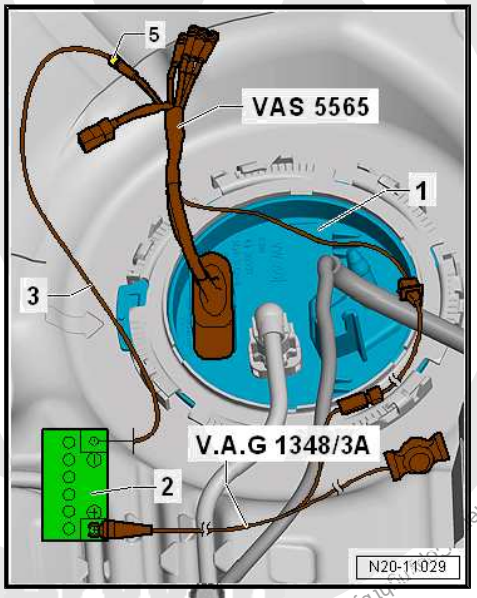

Note

This step allows the fuel pump to run when the engine is not running.

– Open the fuel filler door unit -2-.
– Clean the area around the fuel filler neck.
– Remove the cap -1- for the fuel filler neck.
– Press the -VAG1348/3A- and the shut-off valve on the -VAS 5190- until the fuel tank is empty.

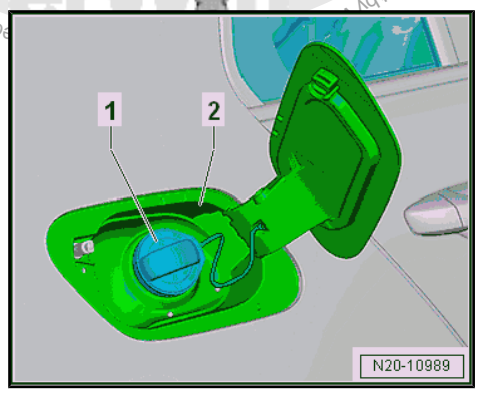

Note

Risk of damaging/destroying the Transfer Fuel Pump - G6- when the fuel tank is empty.

1.3.2 Fuel Tank, Emptying with Fuel Pump Installed, Vehicles with Engine Code CWVA

Special tools and workshop equipment required

- Trim Removal Wedge - 3409-

- Connector Test Set - VAG1594D-

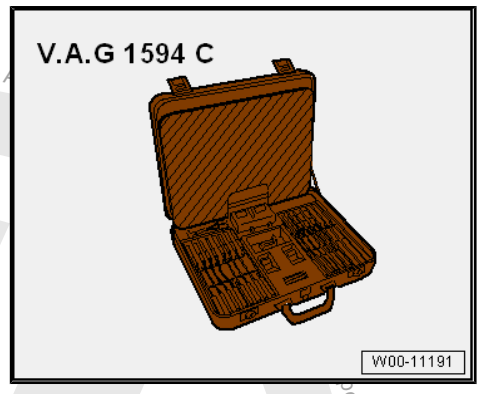

- Injection Rate Comparison Meter Kit - Remote Cable - VAG1348/3A-

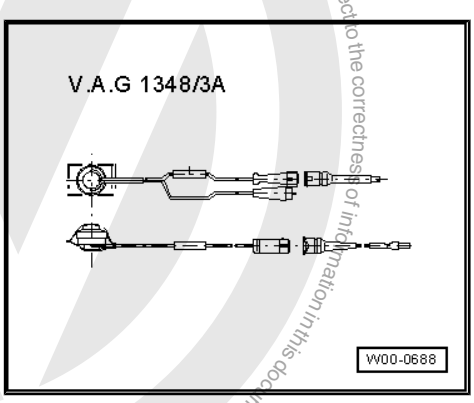

- Vehicle Diagnostic Tester - Test Adapter - 5 Pin - VAS5565-

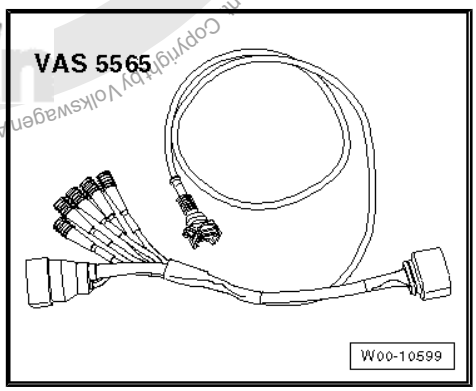

Protected by copyright. Copying for private or commercial purposes, in part or in whole, is not permitted unless authorised by Volkswagen AG. Volkswagen AG does not guarantee or accept any liability with respect to the correctness of information in this document. Copyright by Volkswagen AG.

- Fuel Extractor VAS5190A - VAS5190-

- Fuel Extraction Unit - VAS5190 A- (not illustrated) for E 85 - fuel.
- Fuel Extraction Adapter - VAS5190-

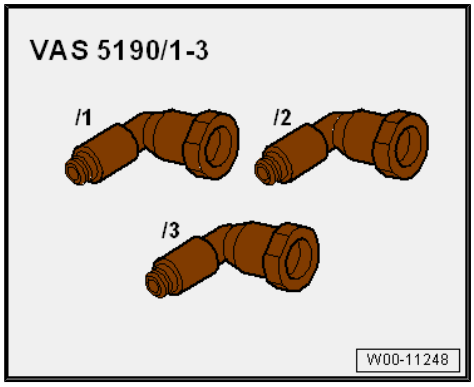

Note

Use only the Fuel Extractor Unit - VAS5190 A- when extracting E 85 - fuel!

Note

If the Fuel Extraction Unit - VAS5190- has a suction hose with a mounted tip, then replace this with one that has a tip which screws on.

Note

Disconnect the connector couplings. Refer to
⇒ "4.1 Connector Couplings, Disconnecting", page 62 .

– Observe the safety instructions. Refer to
⇒ "1 Safety Precautions", page 1 .

– Follow the guidelines for clean working conditions. Refer to
⇒ "3.1 Parking/Auxiliary Heater and Fuel System Clean Working Conditions", page 4 .

Protected by copyright. Copying for private or commercial purposes, in part or in whole, is not permitted unless authorised by Volkswagen AG. Volkswagen AG does not guarantee or assume any liability for the accuracy of information in this document. Copyright by Volkswagen AG.

– Disconnect the fuel supply line -1-. Disconnect the connector couplings. Refer to
⇒ “4.1 Connector Couplings, Disconnecting”, page 62 .

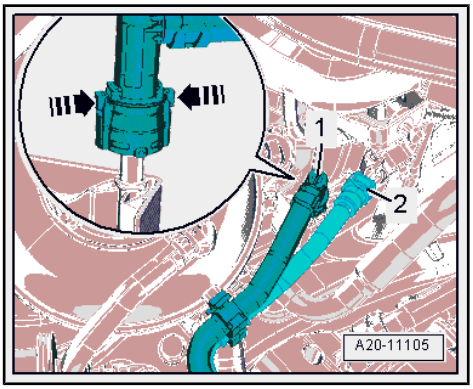

> **WARNING**
>
> ***The fuel line is under pressure.***
>
> ***Fuel poses a risk of injury to the eyes and skin.***
>
> ***Wear protective eyewear and protective clothing to avoid injury and contact with skin. Place a cleaning cloth around the connection point before loosening hose connections. Carefully open the connection point to release the pressure.***

– Collect leaking fuel with a cleaning cloth.

– Connect the Fuel Extraction Unit - VAS 5190- and Fuel Extraction - Adapter 3 - VAS5190 /3- to the fuel supply line.

– Attach the ground wire of the Fuel Extractor Unit to a bare area on the body.

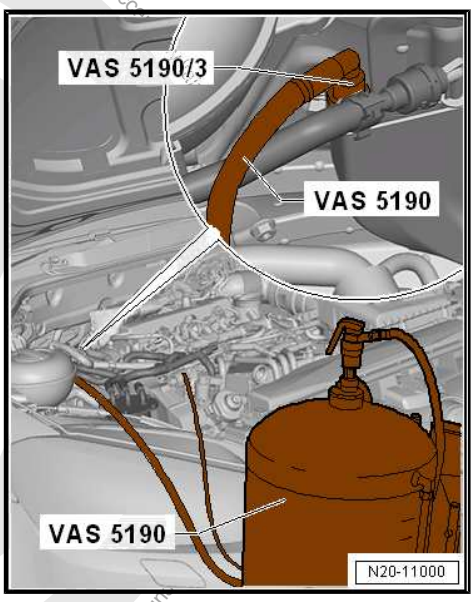

Golf Sportsvan:

– Remove the right rear seat. Refer to ⇒ Body Interior; Rep. Gr. 72 ; Rear Seats; Bench Seat / Single Seat, Removing and Installing .

– Partially loosen the cover -1- in the carpet at the separating line -arrow-.

– Do not separate the cover completely from the carpet so that later it will be installed correctly.

– Only loosen so far that the cover can be folded up.

– Fold up the cover in the -direction of the arrow-.

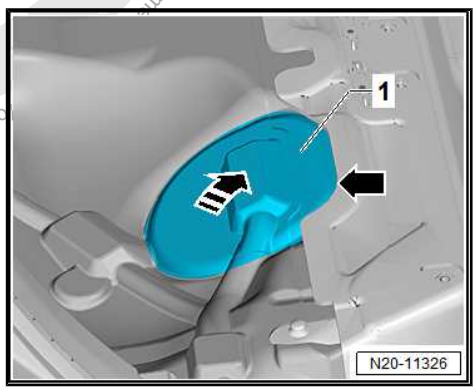

Golf and Golf wagon:

– Remove the rear bench seat. Refer to ⇒ Body Interior; Rep. Gr. 72 ; Rear Seats; Bench Seat / Single Seats, Removing and Installing .

Protected by copyright. Copying for private or commercial purposes, in part or in whole, is not permitted unless authorised by Volkswagen AG. Volkswagen AG does not guarantee or accept any

Continuation for All Vehicles:

– Unclip the sealing flange cover -1- at the tabs -arrows- using the Trim Removal Wedge - 3409- .

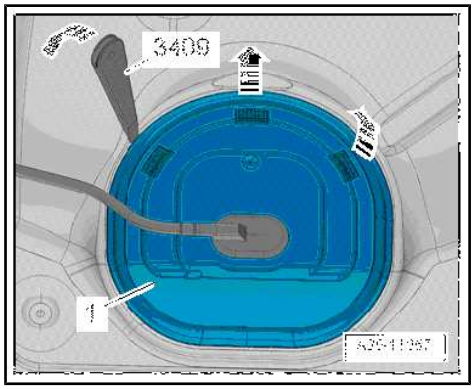

– Unclip the grommet -1- downward out of the cover -2-.

– Guide the cover -2- on the wiring harness -3- toward the rear.

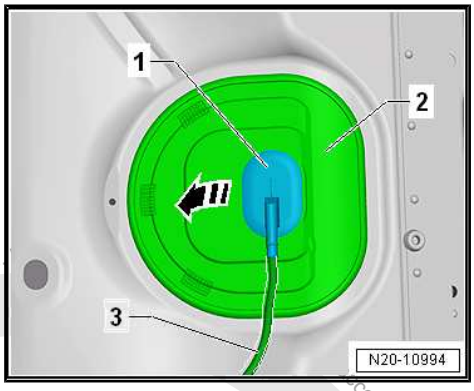

– Release and disconnect the connector -arrow-.

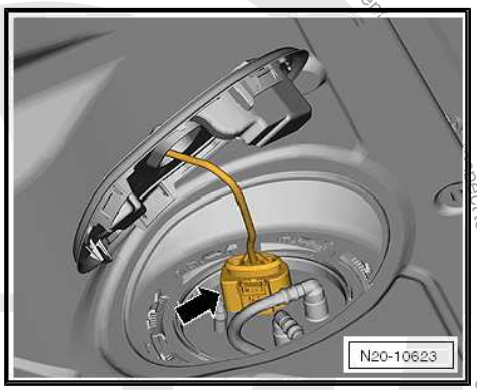

– Connect the Vehicle Diagnostic Tester - Test Adapter - 5 Pin - VAS5565- to the connector and to the fuel delivery unit.

– Connect the Injection Rate Comparison Meter Kit - Remote Cable - VAG1348/3A- to the Vehicle Diagnostic Tester - Test Adapter - 5 Pin - VAS5565- and battery positive (+).

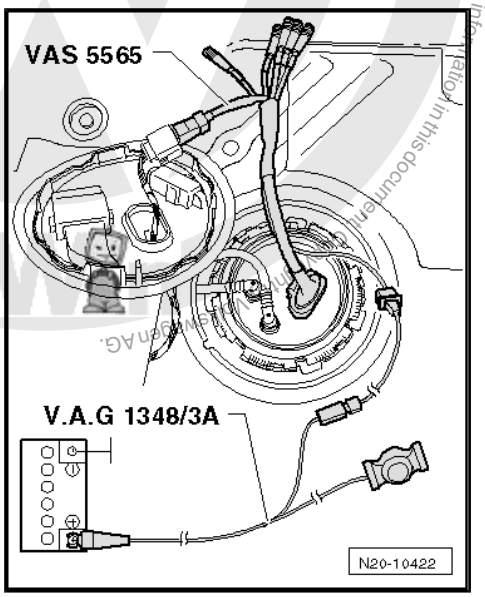

Note

This step allows the fuel pump to run when the engine is not running.

Protected by copyright. Copying for private or commercial purposes, in part or in whole, is not permitted unless authorised by Volkswagen AG.

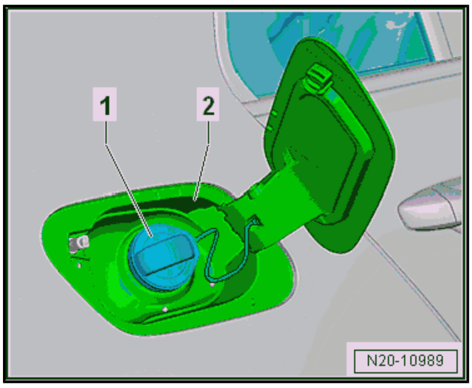

– Open the fuel filler door unit -2-.

– Clean the area around the fuel filler neck.

– Remove the cap -1- for the fuel filler neck.

– Press the Injection Rate Comparison Meter Kit - Remote Cable - VAG1348/3A- and the shut-off valve on the Fuel Extractor Unit - VAS 5190- until the fuel tank is empty.

Note

Risk of damaging/destroying the Transfer Fuel Pump - G6- when the fuel tank is empty.

1.3.3 Fuel Tank, Draining When More than 3/4 Full

Special tools and workshop equipment required

♦ Fuel Extractor VAS5190A - VAS5190-

♦ Fuel Extraction Unit - VAS5190A- (not illustrated) for E 85 - fuel.

Note

Use only the Fuel Extractor Unit - VAS5190A- when extracting E 85 - fuel!

– Pay attention to all safety precautions. Refer to ⇒ “1 Safety Precautions”, page 1 .

– Follow the guidelines for clean working conditions. Refer to ⇒ “3.1 Parking/Auxiliary Heater and Fuel System Clean Working Conditions”, page 4 .

– Mark the hose -arrow- at the distance -a- from the end of the suction hose on the -VAS5190- .

– Use insulating tape.

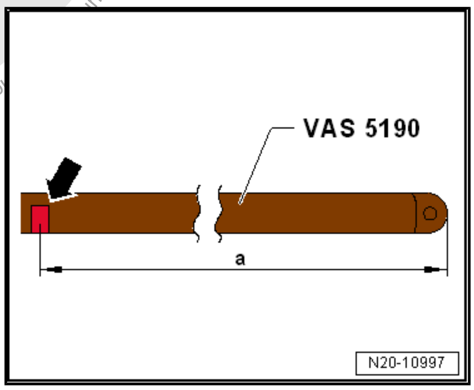

Rear Axle	Distance a in mm
Vehicles with multi-link rear axle	945 mm
Vehicles with Torsion Beam Rear Suspension	1010 mm

Protected by copyright. Copying for private or commercial purposes, in part or in whole, is not permitted unless authorised by Volkswagen AG. Volkswagen AG does not guarantee or accept any liability with respect to the correctness of information in this document. Copyright by Volkswagen AG.

– Open the fuel filler door unit -2-.
– Clean the area around the fuel filler neck.
– Remove the cap -1- for the fuel filler neck.
– Attach the ground wire from the -VAS5190A- to a bare area on the body.

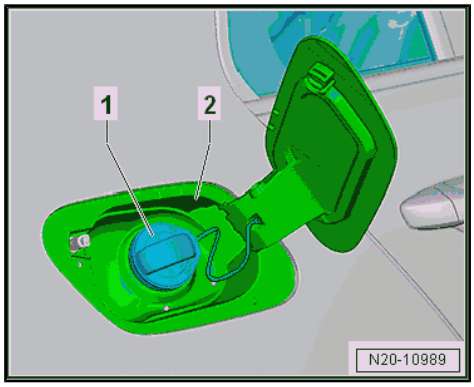

– Slide the suction hose from the -VAS5190A- into the fuel tank until the previously made mark -arrow- meets the filler neck -2-.
– Drain the fuel tank as much as possible through the filler neck.

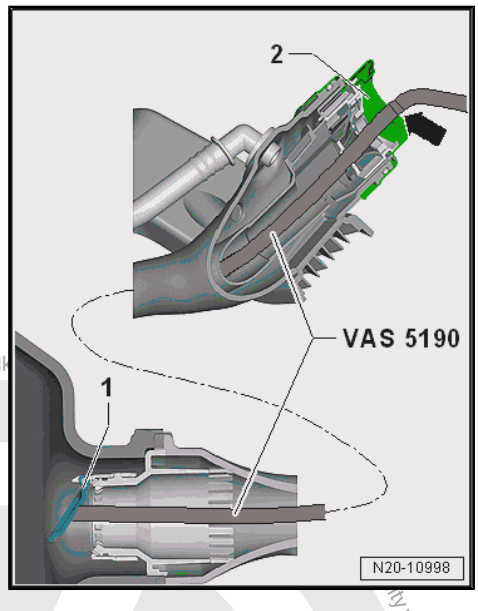

Note

- *A valve -1- is located in the fuel tank on the lower end of the filler neck. It must not be damaged by the suction hose. Only slide the hose in as far as the mark that was made earlier -arrow-.*
- *Do not use force to remove the suction hose it if gets stuck on the check valve.*
- *In this case, remove the fuel delivery unit and manually hold the check valve open. When doing this, make sure the arm does not come in contact with the fuel.*

– Carefully remove the suction hose.

Note

- *When no more fuel can be extracted, the fuel tank is only emptied enough so that the sensor flange can be opened safely.*
- *When working on the fuel delivery unit or on the Fuel Gauge Sensor , proceed as follows. Refer to* *⇒ "1.3.4 Fuel Tank, Draining When Less Than 3/4 Full", page 44* .

1.3.4 Fuel Tank, Draining When Less Than 3/4 Full

Special tools and workshop equipment required

- Trim Removal Wedge - 3409-
- Fuel Extractor VAS5190A - VAS5190-
- Fuel Extraction Unit - VAS5190A- (not illustrated) for E 85 - fuel.
- Wrench - Fuel Sending Unit - T10202-
- Torque Wrench 1332 40-200Nm - VAG1332-

Protected by copyright. Copying for private or commercial purposes, in part or in whole, is not permitted unless authorised by Volkswagen AG. Volkswagen AG. Copyright by Volkswagen AG. ty with respect to the correctness of information in this document.

Protected by copyright. Copying for private or commercial purposes, in part or in whole, is not permitted unless authorised by Volkswagen AG. Volkswagen AG does not guarantee or accept any liability with respect to the correctness

Note

Use only the -VAS5190A- when extracting E 85 - fuel!

– Pay attention to all safety precautions. Refer to ⇒ “1 Safety Precautions”, page 1 .

– Follow the guidelines for clean working conditions. Refer to ⇒ “3.1 Parking/Auxiliary Heater and Fuel System Clean Working Conditions”, page 4 .

Golf Sportsvan:

– Remove the right rear seat. Refer to ⇒ Body Interior; Rep. Gr. 72 ; Rear Seats; Bench Seat / Single Seat, Removing and Installing .

– Partially loosen the cover -1- in the carpet at the separating line -arrow-.

– Do not separate the cover completely from the carpet so that later it will be installed correctly.

– Only loosen so far that the cover can be folded up.

– Fold up the cover in the direction of the -arrow-.

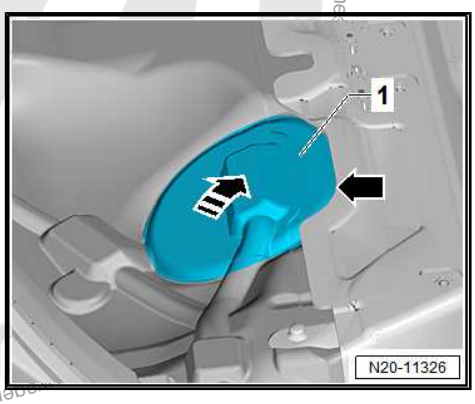

Golf and Golf Wagon:

– Remove the rear bench seat. Refer to ⇒ Body Interior; Rep. Gr. 72 ; Rear Seats; Bench Seat / Single Seats, Removing and Installing .

Continuation for All Vehicles:

– Unclip the sealing flange cover -1- at the tabs -arrows- using the -3409- .

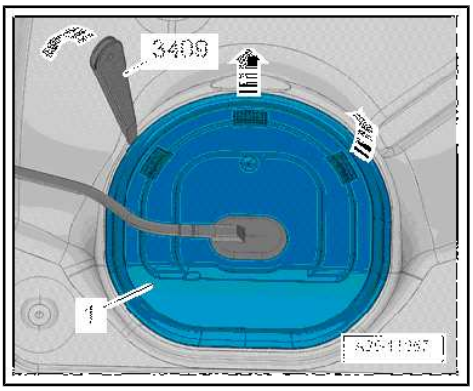

– Unclip the grommet -1- downward out of the cover -2-.

– Guide the cover -2- on the wiring harness -3- toward the rear.

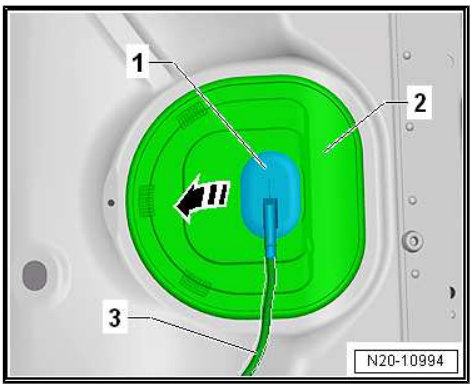

– Unlock and disconnect the connector -1- from the sealing flange.

– If equipped, disengage the connector -2- for the parking heater Metering Pump - V54- on the sealing flange and move it to the side.

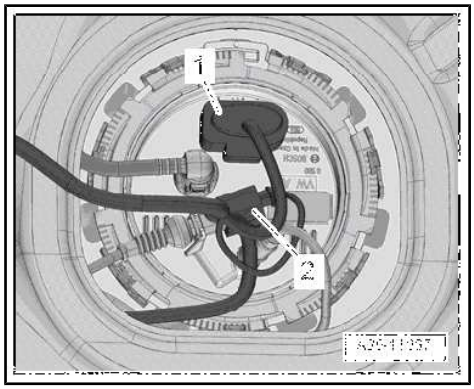

– Lift the tab -2- in the direction of the -arrow A-.

– To do so, reach a finger between the floor panel and the fuel tank.

– At the same time, carefully pull the Fuel Pump Control Module - J538- -1- out of the mount at the wiring harness -3- in the direction of the -arrow B-.

– Remove the Fuel Pump Control Module - J538- toward the inside between the fuel tank and the floor panel.

– Move the Fuel Pump Control Module - J538- together with the wiring harness to the side.

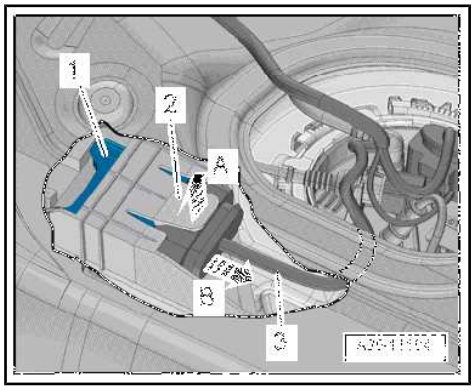

– Remove the fuel line -1- from the sealing flange. Disconnect the connector couplings. Refer to
⇒ “4.1 Connector Couplings, Disconnecting”, page 62 .

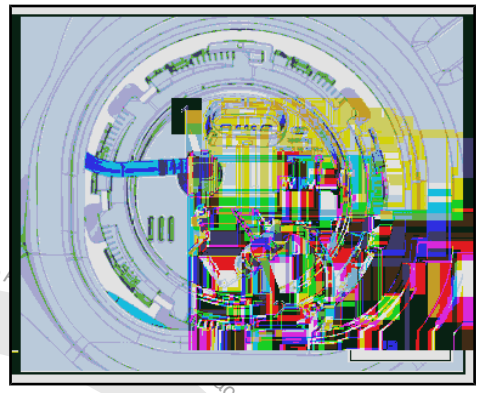

WARNING

The fuel line is under pressure.

Fuel poses a risk of injury to the eyes and skin.

Wear protective eyewear and protective clothing to avoid injury and contact with skin. Place a cleaning cloth around the connection point before loosening hose connections. Carefully open the connection point to release the pressure.

– If equipped, remove the fuel line -2- to the Metering Pump - V54- for the parking heater on the sealing flange.

– Loosen the lower hose clamp to do this.

– Open the locking ring using the Wrench - Fuel Sending Unit - T10202- .

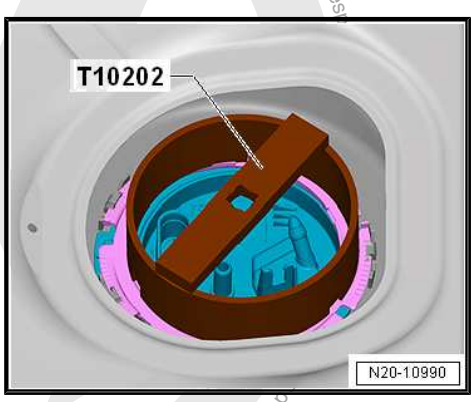

Protected by copyright. Copying for private or commercial purposes, in part or in whole, is not permitted unless authorized by Volkswagen AG. Volkswagen AG does not accept any liability with respect to this document. Copyright by Volkswagen AG.

– Carefully lift the fuel delivery unit flange -3-.
– Remove the seal -1- and slightly lift the fuel delivery unit flange again carefully.
– Attach the ground wire of the -VAS5190- to a bare area on the body.
– Insert the suction hose for the -VAS5190- as deep as possible into the fuel tank.
– Extract the fuel using the -VAS5190- .

If the fuel tank only needs to be drained, reinstall the fuel delivery unit. Refer to
⇒ “2.2 Fuel Delivery Unit/Fuel Level Sensor, Removing and Installing”, page 52 .

Tightening Specifications

- Refer to
⇒ “2.1 Overview - Fuel Delivery Unit/Fuel Level Sensor”, page 51
- Refer to ⇒ Heating, Ventilation and Air Conditioning; Rep. Gr. 82 ; Fuel Supply; Component Location Overview - Fuel Supply .

1.3.5 Fuel Tank less than 3/4 Full, Emptying, Vehicles with Engine Code CWVA

Special tools and workshop equipment required

- Trim Removal Wedge - 3409-

- Fuel Extractor VAS5190A - VAS5190-

- Fuel Extraction Unit - VAS5190 A- (not illustrated) for E 85 fuel.

Protected by copyright. Copying for private or commercial purposes, in part or in whole, is not permitted unless authorised by Volkswagen AG. Volkswagen AG does not

- Wrench - Fuel Sending Unit - T10202-

- Torque Wrench 1332 40-200Nm - VAG1332-

Protected by copyright. Copying for private or commercial purposes, in part or in whole, is not permitted unless authorised by Volkswagen AG. Volkswagen AG does not guarantee or accept any liability in this document. Copyright by Volkswagen AG.

Note

Use only the Fuel Extractor Unit - VAS5190 A- when extracting E 85 - fuel!

– Pay attention to all safety precautions. Refer to ⇒ “1 Safety Precautions”, page 1 .

– Follow the guidelines for clean working conditions. Refer to ⇒ “3.1 Parking/Auxiliary Heater and Fuel System Clean Working Conditions”, page 4 .

Golf Sportsvan:

– Remove the right rear seat. Refer to ⇒ Body Interior; Rep. Gr. 72 ; Rear Seats; Bench Seat / Single Seat, Removing and Installing .

– Partially loosen the cover -1- in the carpet at the separating line -arrow-.

– Do not separate the cover completely from the carpet so that later it will be installed correctly.

– Only loosen so far that the cover can be folded up.

– Fold up the cover in the -direction of the arrow-.

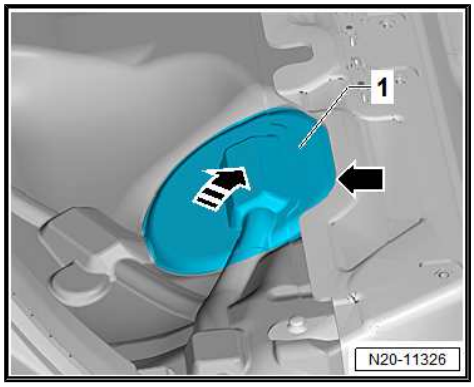

Golf and Golf wagon:

– Remove the rear bench seat. Refer to ⇒ Body Interior; Rep. Gr. 72 ; Rear Seats; Bench Seat / Single Seats, Removing and Installing .

Protected by copyright. Copying for private or commercial purposes, in part or in whole, is not permitted unless authorised by Volkswagen AG. Volkswagen AG does not guarantee or assume

Continuation for All Vehicles:

– Unclip the sealing flange cover -1- at the tabs -arrows- using the Trim Removal Wedge - 3409- .

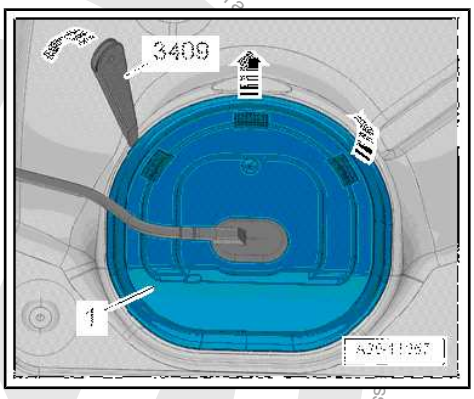

– Unclip the grommet -1- downward out of the cover -2-.

– Guide the cover -2- on the wiring harness -3- toward the rear.

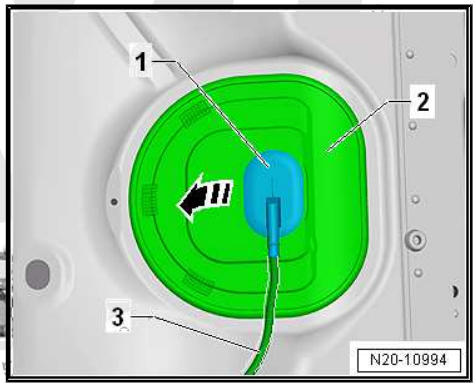

– Release and disconnect the connector -arrow-.

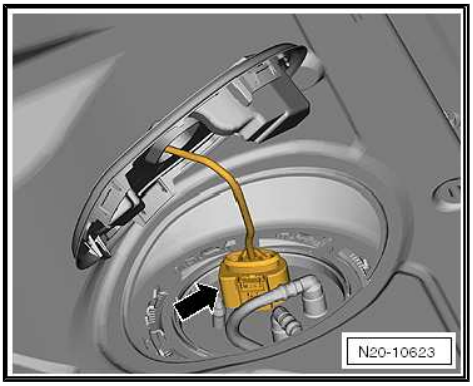

– Remove the fuel line -1- from the sealing flange. Disconnect the connector couplings. Refer to
⇒ “4.1 Connector Couplings, Disconnecting”, page 62 .

WARNING

The fuel line is under pressure.

Fuel poses a risk of injury to the eyes and skin.

Wear protective eyewear and protective clothing to avoid injury and contact with skin. Place a cleaning cloth around the connection point before loosening hose connections. Carefully open the connection point to release the pressure.

– If equipped, remove the fuel line -2- to the Metering Pump - V54- for the parking heater on the sealing flange.

– Loosen the lower hose clamp to do this.

– Open the locking ring using the Wrench - Fuel Sending Unit - T10202- .

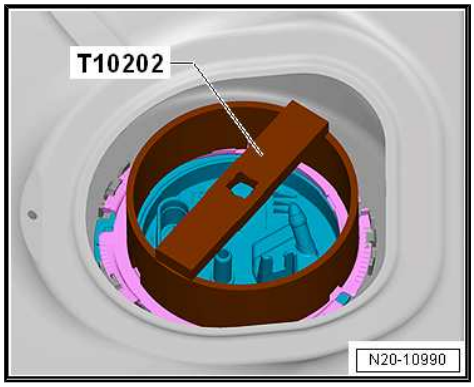

– Carefully lift the fuel delivery unit flange -3-.
– Remove the seal -1- and slightly lift the fuel delivery unit flange again carefully.
– Attach the ground wire of the Fuel Extractor Unit to a bare area on the body.
– Insert the suction hose for the Fuel Extraction Unit- VAS5190- as deep as possible into the fuel tank.
– Extract the fuel using the Fuel Extractor Unit - VAS5190- .

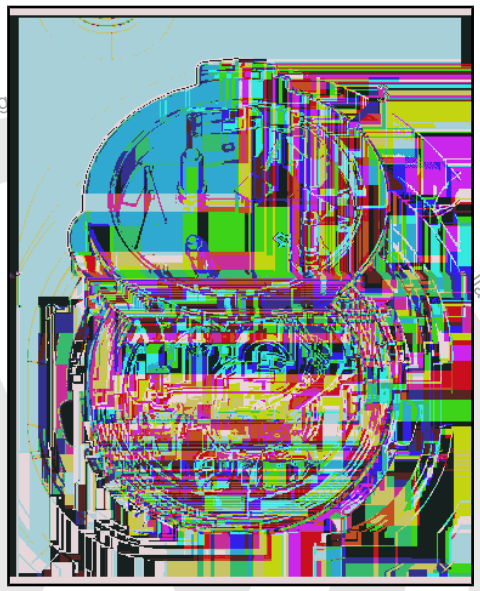

If the fuel tank only needs to be drained, reinstall the fuel delivery unit. Refer to
⇒ “2.2 Fuel Delivery Unit/Fuel Level Sensor, Removing and Installing”, page 52 .

Tightening Specifications

- ⇒ “2.1 Overview - Fuel Delivery Unit/Fuel Level Sensor”, page 51
- Refer to ⇒ Heating, Ventilation and Air Conditioning; Rep. Gr. 82 ; Fuel Supply; Component Location Overview - Fuel Supply .

Protected by copyright. Copyright for private or commercial purposes, in part or in whole is not permitted unless authorised by Volkswagen AG. Copyright by Volkswagen AG. No liability with respect to the correctness of information in this document.

2 Fuel Delivery Unit/Fuel Level Sensor

⇒ “2.1 Overview - Fuel Delivery Unit/Fuel Level Sensor”, page 51

⇒ “2.2 Fuel Delivery Unit/Fuel Level Sensor, Removing and Installing”, page 52

⇒ “2.3 Fuel Level Sensor G , Removing and Installing”, page 56

2.1 Overview - Fuel Delivery Unit/Fuel Level Sensor

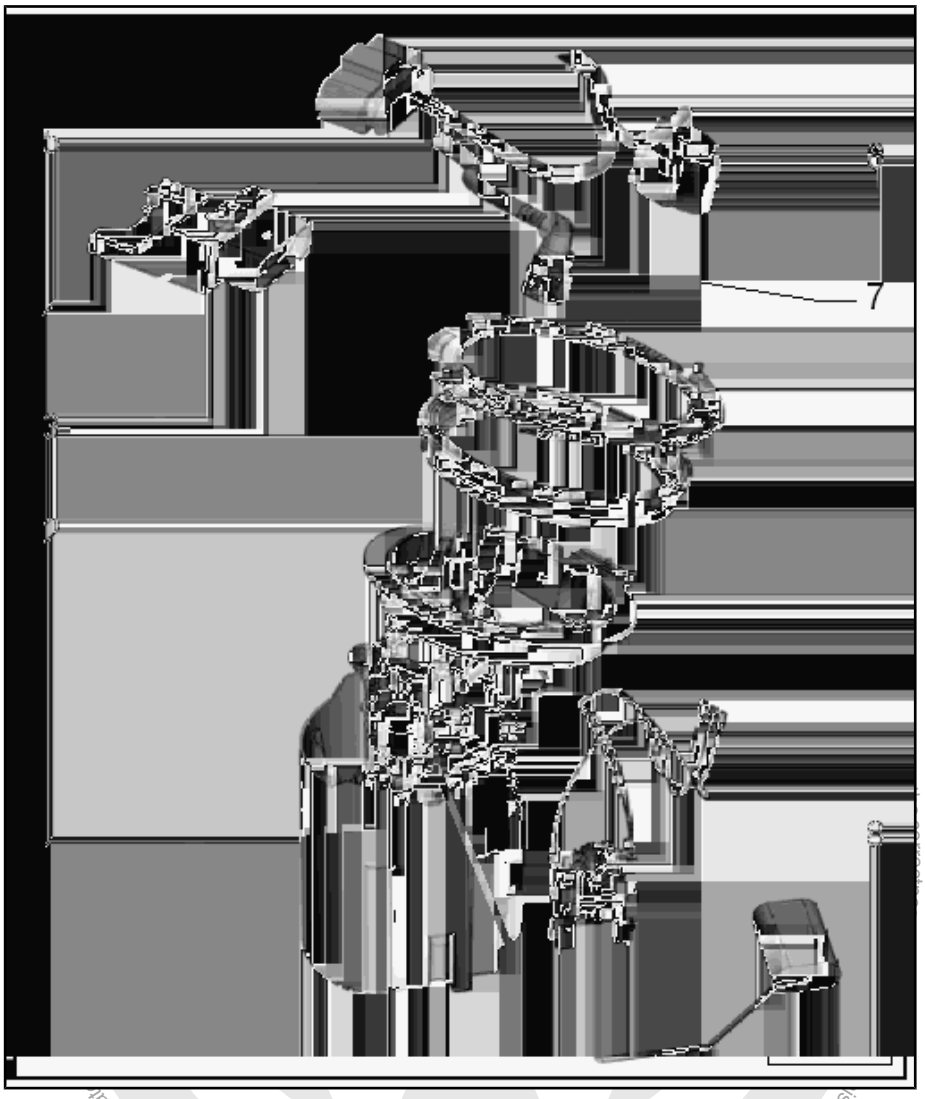

1 - Fuel Delivery Unit

- ❑ With the Transfer Fuel Pump - G6-
- ❑ Cannot be replaced separately with an integrated fuel filter
- ❑ Cannot be replaced separately with an integrated pressure relief valve
- ❑ Check the fuel pump electronically using the Vehicle Diagnostic Tester ⇒ Vehicle diagnostic tester.
- ❑ Removing and Installing. Refer to ⇒ “2.2 Fuel Delivery Unit/Fuel Level Sensor, Removing and Installing”, page 52 .
- ❑ Fill the vehicle with at least five liters of fuel after installing

2 - Seal

- ❑ Replace
- ❑ Install dry

3 - Locking Ring

- ❑ 110 Nm
- ❑ Loosen and tighten using the Wrench - Fuel Sending Unit - T10202-

4 - Fuel Pump Control Module - J538-

- ❑ Not on vehicles with engine code CWVA
- ❑ Check in `Guided Fault Finding` using the Vehicle Diagnostic Tester .
- ❑ Removing and Installing. Refer to ⇒ “8.2 Fuel Pump Control Module J538 , Removing and Installing”, page 116 .

5 - Connector

- ❑ For Fuel Pump Control Module - J538-
- ❑ Make sure it is attached securely and pull on it to make sure the connector it is properly locked.

6 - Connector

- ❑ For the Transfer Fuel Pump - G6- and the Fuel Gauge Sensor - G-

Protected by copyright. Copying for private and commercial purposes, in part, is not permitted unless authorized by Volkswagen AG. Copyright by Volkswagen AG.

- ❑ Make sure it is attached securely and pull on it to make sure the connector it is properly locked.

7 - Fuel Supply Line

- ❑ To the engine
- ❑ Do not kink
- ❑ To disconnect, press the release button on the connecting piece
- ❑ The connector couplings must »audibly« engage when locking.
- ❑ Pull on the connector coupling to check for secure fit.
- ❑ Connector Couplings, Disconnecting. Refer to ⇒ “4.1 Connector Couplings, Disconnecting”, page 62 .

8 - Fuel Gauge Sensor - G-

- ❑ Checking using the Vehicle Diagnostic Tester .
- ❑ Removing and Installing. Refer to ⇒ “2.3 Fuel Level Sensor G , Removing and Installing”, page 56 .

Fuel Delivery Unit Installation Position

- The arrow -3- on the fuel tank must point to the mark -2- on the sealing flange -1-.

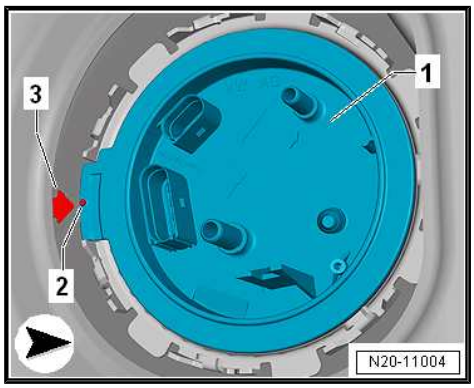

Fuel Lines to the Fuel Delivery Unit

1 - Fuel Supply Line

2 - Fuel line to Metering Pump - V54-

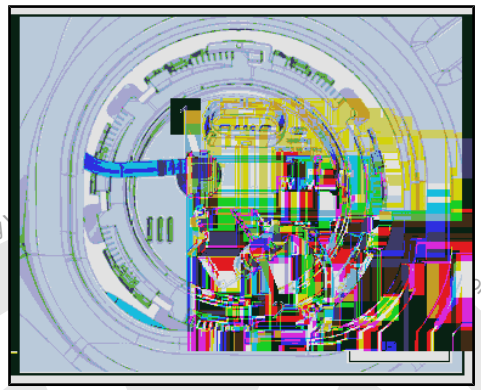

2.2 Fuel Delivery Unit/Fuel Level Sensor, Removing and Installing

Special tools and workshop equipment required

- ♦ Wrench - Fuel Sending Unit - T10202-
- ♦ Torque Wrench 1332 40-200Nm - VAG1332-
- ♦ Trim Removal Wedge - 3409-

Removing

- Pay attention to all safety precautions. Refer to ⇒ “1 Safety Precautions”, page 1 .
- Follow the guidelines for clean working conditions. Refer to ⇒ “3.1 Parking/Auxiliary Heater and Fuel System Clean Working Conditions”, page 4 .
- The fuel tank may be a maximum of $^{3}/_{4}$ full. This ensures the fuel level is below the fuel delivery unit flange.

Protected by copyright. Copying for private or commercial purposes, in part or in whole, is not permitted unless authorised by Volkswagen AG. Copyright by Volkswagen AG. We do not accept any liability with respect to the correctness of information in this document.

Protected by copyright. Copying for private or commercial purposes, in part or in whole, is not permitted unless authorised by Volkswagen AG. Volkswagen AG does not guarantee or accept any liability with respect to the correctness of the

– Drain the fuel tank. Refer to ⇒ “1 Fuel Tank”, page 6 .

Golf Sportsvan:

– Remove the right rear seat. Refer to ⇒ Body Interior; Rep. Gr. 72 ; Rear Seats; Bench Seat / Single Seat, Removing and Installing .

– Partially loosen the cover -1- in the carpet at the separating line -arrow-.

– Do not separate the cover completely from the carpet so that later it will be installed correctly.

– Only loosen so far that the cover can be folded up.

– Fold up the cover in the direction of the -arrow-.

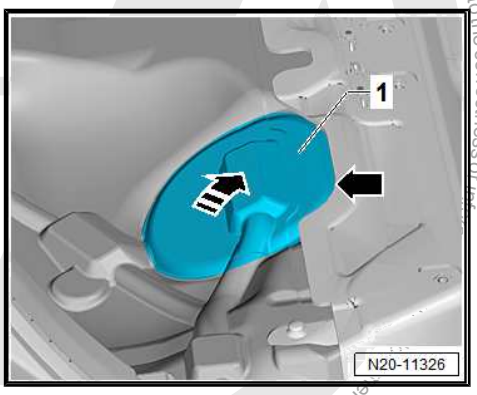

Golf and Golf Wagon:

– Remove the rear bench seat. Refer to ⇒ Body Interior; Rep. Gr. 72 ; Rear Seats; Bench Seat / Single Seats, Removing and Installing .

Continuation for All Vehicles:

– Unclip the sealing flange cover -1- at the tabs -arrows- using the Trim Removal Wedge - 3409- .

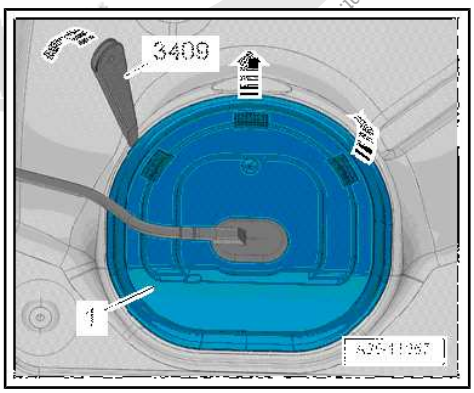

– Unclip the grommet -1- downward out of the cover -2-.

– Guide the cover -2- on the wiring harness -3- toward the rear.

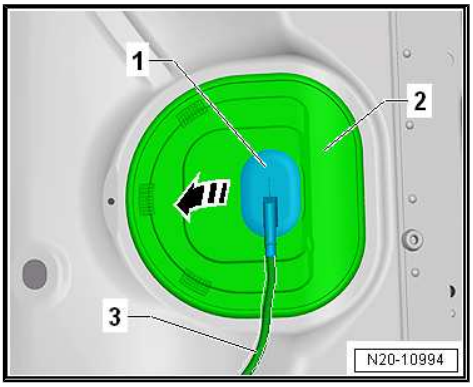

– Unlock and disconnect the connector -1- from the sealing flange.

– If equipped, disengage the connector -2- for the parking heater Metering Pump - V54- on the sealing flange and move it to the side.

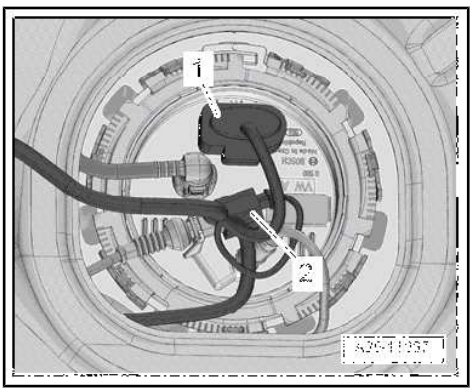

– Remove the fuel line -1- from the sealing flange. Disconnect the connector couplings. Refer to ⇒ “4.1 Connector Couplings, Disconnecting”, page 62 .

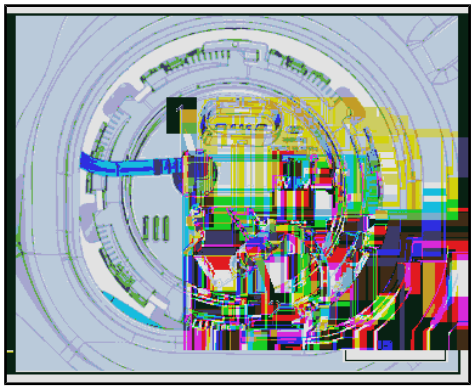

WARNING

The fuel line is under pressure.

Fuel poses a risk of injury to the eyes and skin.

Wear protective eyewear and protective clothing to avoid injury and contact with skin. Place a cleaning cloth around the connection point before loosening hose connections. Carefully open the connection point to release the pressure.

– If equipped, remove the fuel line -2- to the Metering Pump - V54- for the parking heater on the sealing flange.

– Loosen the lower hose clamp to do this.

– Open the locking ring using the Wrench - Fuel Sending Unit - T10202- .

– Carefully lift the fuel delivery unit flange.

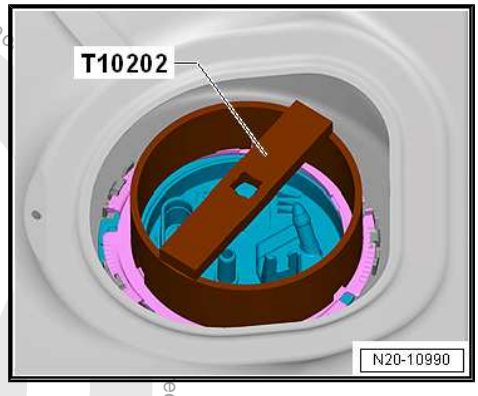

– Pull the sealing flange -2- out of the opening in the fuel tank just a little.

– Remove the seal -1- at the fuel tank opening.

– Carefully pull the fuel delivery unit with the Fuel Gauge Sensor - G- out through the opening in the fuel tank.

– Turn and tilt it as needed.

– Be careful not to bend the floater arm on the fuel level sensor when removing the fuel delivery unit.

– Place a cloth underneath to catch the leaking fuel, since the fuel delivery unit is still filled.

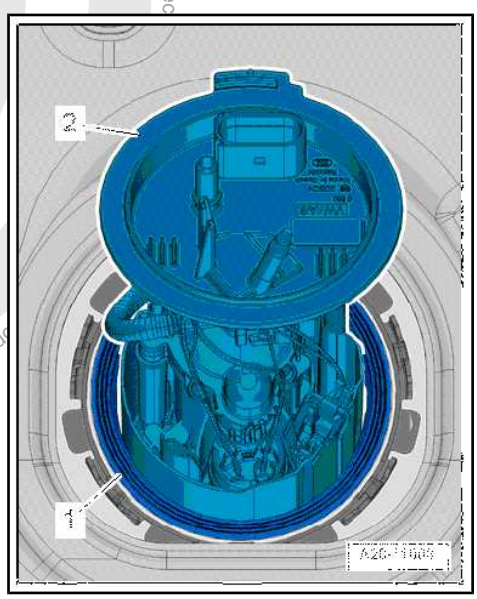

Vehicles with Suction Line in the Fuel Tank

Protected by copyright. Copying for private or commercial purposes, in part or in whole, is not permitted unless authorised by Volkswagen AG. Volkswagen AG does not guarantee or accept any liability with respect to the correctness of information in this document. Copyright by Volkswagen AG.

– Pull the fuel delivery unit -2- as far as possible out of the fuel tank.

– Release the fuel line -1- in the fuel tank and disconnect it from the suction line -3-. Connector Couplings, Disconnecting. Refer to ⇒ “4 Connector Couplings”, page 62 .

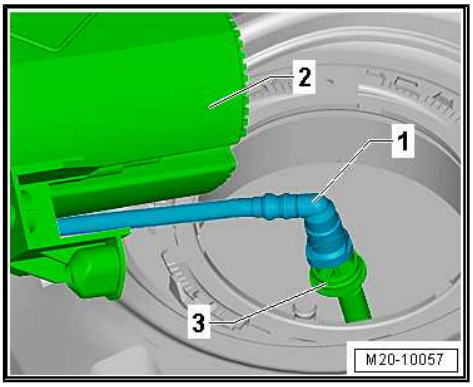

Continuation for all Vehicles.

Note

- *If the delivery unit is being replaced, the old delivery unit must be emptied before disposing of it.*
- *Follow all waste disposal regulations.*
- *Check the fuel tank for contamination.*

Installing:

Install in reverse order of removal. Note the following:

Note

- *Disconnect the connector couplings. Refer to* *⇒ “4.1 Connector Couplings, Disconnecting”, page 62* .
- *Replace the gasket if damaged.*

– Install the dry fuel delivery unit seal -1- into the opening in the fuel tank.

– Be careful not to bend the fuel gauge sensor when installing the fuel delivery unit.

– Coat the inside of the seal -1- with fuel.

– Push the sealing flange -2- down against the spring force.

– Bring the sealing flange into its installation position.

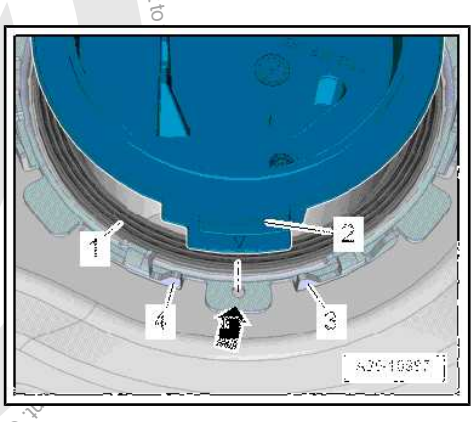

– The arrow -3- on the fuel tank must point to the mark -2- on the sealing flange -1-.

– When inserting the sealing flange, the seal must not be damaged or crushed.

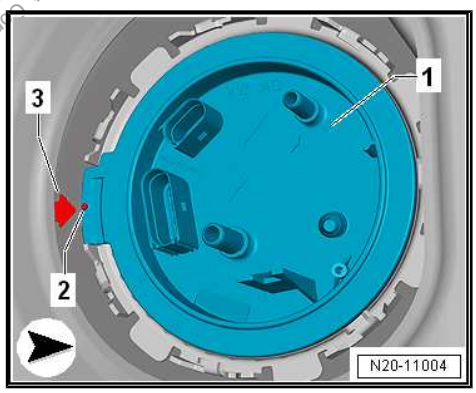

Protected by copyright. Copying for private or commercial purposes, in part or in whole, is not permitted unless authorised by Volkswagen AG. Volkswagen AG does not guarantee or accept any liability with respect to the correctness of information in this document. Copyright by Volkswagen AG.

Copyright. Copying for commercial purposes, in part or in whole, is not permitted unless authorised by Volkswagen AG. Volkswagen AG does not guarantee or accept any liability with respect to the correctness of information in this document.

– Tighten the locking ring using the -T10202- .

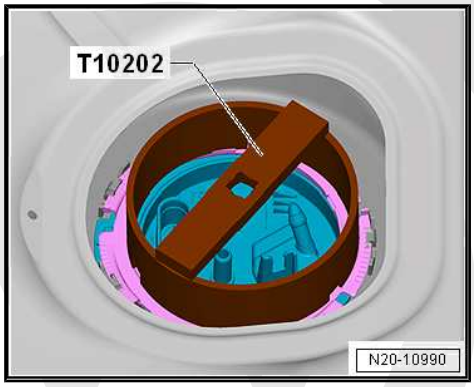

– Attach the fuel line -1- to the sealing flange until it clicks into place.

– If equipped, install the fuel line -2- to the Metering Pump - V54- for the parking heater on the sealing flange. Refer to ⇒ Heating, Ventilation and Air Conditioning; Rep. Gr. 82 ; Fuel Supply; Component Location Overview - Fuel Supply .

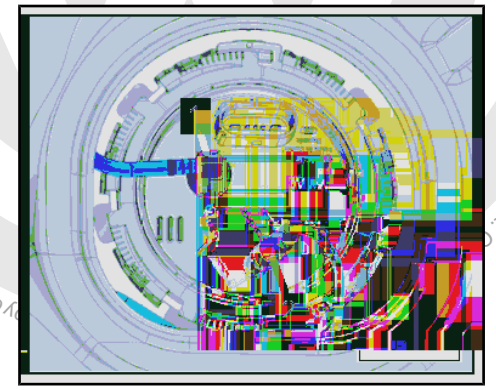

– Connect the connector -1-.

– If equipped, engage the connector -2- for the parking heater Metering Pump - V54- on the sealing flange.

– Pull on the connector -1- to make sure it is secure.

– Fill the fuel tank with at least five liters of gasoline after installing the fuel delivery unit.

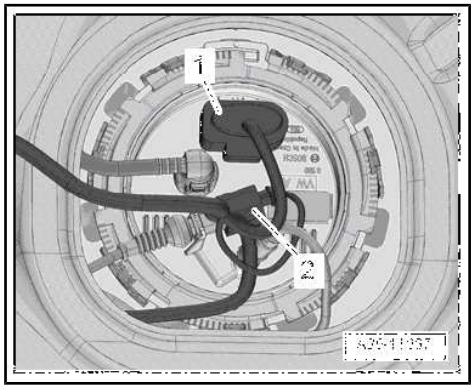

Tightening Specifications

♦ Refer to
⇒ “2.1 Overview - Fuel Delivery Unit/Fuel Level Sensor”, page 51

2.3 Fuel Level Sensor - G- , Removing and Installing

Removing

– Remove the fuel delivery unit. Refer to
⇒ “2.2 Fuel Delivery Unit/Fuel Level Sensor, Removing and Installing”, page 52 .

– Make a note of the colors of the cables -1- for installing later.

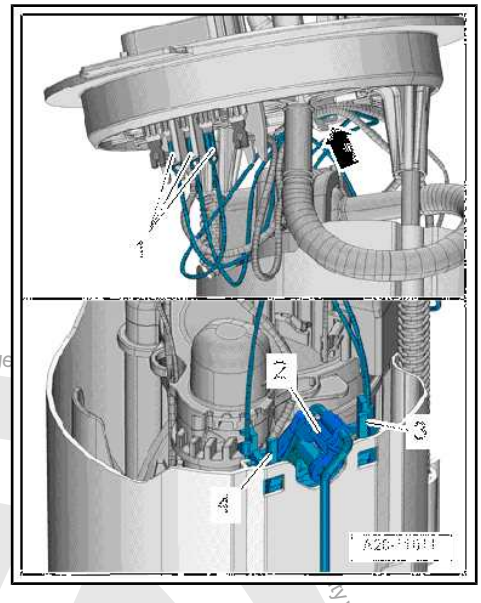

– Unlock and disconnect the connectors -1- from the sealing flange.
– Disengage and free up the wires on the bracket -arrow-.
– Unlock the retainers -3- and -4-.
– Pull the Fuel Gauge Sensor - G- -2- upward.
– Bend back the hooks on the connector.

Installing:

– Install in reverse order of removal. Note the following.
– Pay attention to the color of the contacts.
– Pull on the connectors to make sure they are secure.
– Insert the Fuel Level Sensor - G- into the guide on the fuel delivery unit and push downward until it engages.
– Install the fuel delivery unit. Refer to ⇒ “2.2 Fuel Delivery Unit/Fuel Level Sensor, Removing and Installing”, page 52 .

Protected by copyright. Copying for private or commercial purposes, in part or in whole, is not permitted unless authorised by Volkswagen AG. Volkswagen AG does not guarantee or accept any liability with respect to the correctness of information in this document. Copyright by Volkswagen AG.

3 Wiring

⇒ “3.1 Fuel Lines, Removing and Installing”, page 58

3.1 Fuel Lines, Removing and Installing

Removing

- If equipped, remove the underbody trim panel in front of the right rear axle. Refer to ⇒ Body Exterior; Rep. Gr. 66 ; Underbody Trim Panel; Component Location Overview - Trim Panels .
- If necessary, remove the right underbody trim panel. Refer to ⇒ Body Exterior; Rep. Gr. 66 ; Underbody Trim Panel; Component Location Overview - Trim Panels .
- Disconnect the fuel lines on the underbody. Refer to ⇒ “4.1 Connector Couplings, Disconnecting”, page 62 .
- Unclip the bracket -1- from the underbody -arrows-.
- Unclip the bracket -1- from the fuel lines.
- Secure using a pulling aid (for example a cable or string) on the fuel lines.
- This pulling aid make the reinstallation easier, to do so select enough length.
- Use adhesive tape to secure the pulling aid.

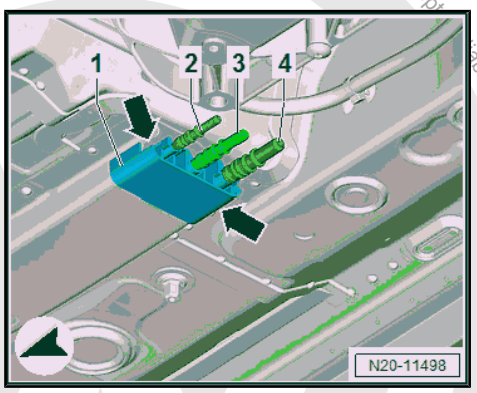

- Remove fuel supply line -1 and 2-. Disconnect the connector couplings. Refer to ⇒ “4.1 Connector Couplings, Disconnecting”, page 62 .

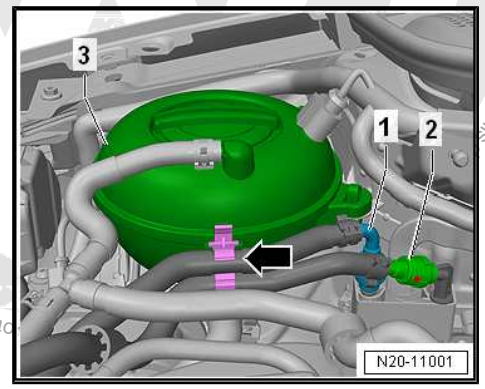

> **WARNING**
>
> *The fuel line is under pressure.*
>
> *Fuel poses a risk of injury to the eyes and skin.*
>
> *Wear protective eyewear and protective clothing to avoid injury and contact with skin. Place a cleaning cloth around the connection point before loosening hose connections. Carefully open the connection point to release the pressure.*

- Unclip the fuel lines -1 and 2- from the bracket -arrow- on the coolant expansion tank -3-.
- Disconnect the connector -1-.
- Open the bracket and remove the coolant hoses from the engine.
- Release the retainers with a screwdriver -arrow- and move the coolant expansion tank to the side.
- Open the bracket for the refrigerant lines on the right wheel housing.
- Unclip the refrigerant lines.

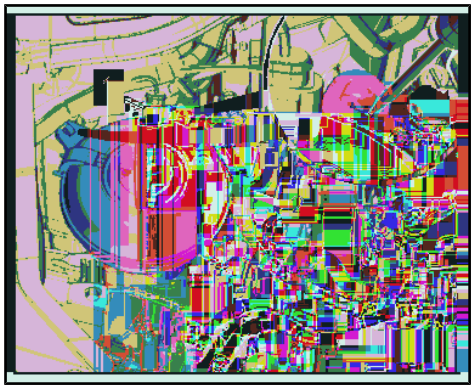

Copyright. Copying for private or commercial purposes, in part or in whole is not permitted unless authorised by Volkswagen AG. Volkswagen AG does not guarantee or accept any liability with respect to the correctness of information in this document.

– If equipped remove the heat shield -1- from the ABS Hydraulic Unit - N55- .
– To do so, unclip the heat shield -1- from the bracket -2- -arrow-.

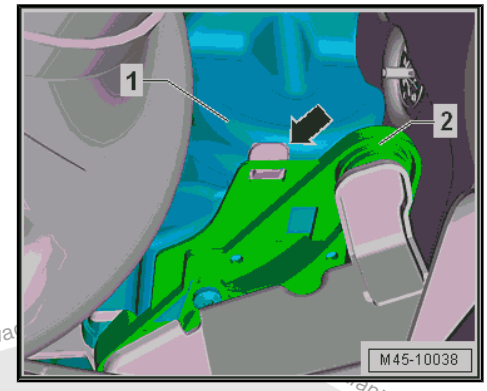

Vehicles with Parking Heater:

– Remove the front section of the wheel housing liner or right front wheel housing liner. Refer to ⇒ Body Exterior; Rep. Gr. 66 ; Wheel Housing Liner; Overview - Front Wheel Housing Liner .
– Unlock and remove the fuel line -7-.
– Catch escaping fuel using cleaning cloths.
– Unclip the fuel line from the bracket and guide out.
– Remove the bracket for the refrigerant lines from the body.
– Guide the fuel line under the refrigerant lines and the engine mount.

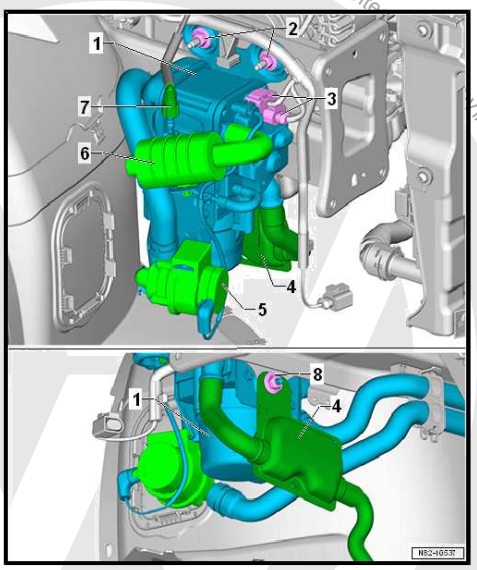

Protected by copyright. Copying for private or commercial purposes, in part or whole, is not permitted unless authorised by Volkswagen AG. Copyright by Volkswagen AG. No liability with respect to the correctness of information in this document.

Continuation for All Vehicles:

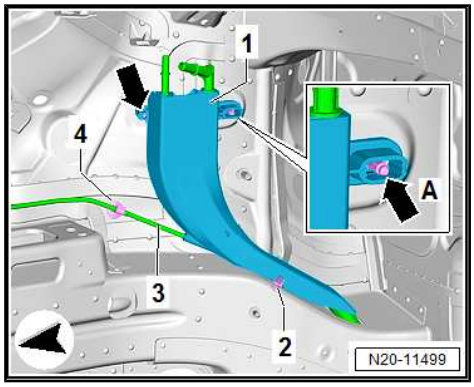

- Unclip the shield -1- on the stud bolt from the body -arrow A-.
- Unclip the shield -1- from the longitudinal member -2-.
- If equipped, loosen the clip -4- for the parking/auxiliary heater fuel line -3- from the body.
- Unclip the bracket -2- for the shield from the longitudinal member.
- Remove the lines upward.
- At the same time turn the lines, but do not tear!

Installing:

Install in reverse order of removal. Note the following:

Note

- *The fuel line, bleed pipe, and fuel line for the parking/auxiliary heater are installed together.*
- *Secure the lines for example with adhesive tape.*

- Remove the pulling aid from the old lines.
- Insert the lines as shown in the shield guide and clip in. Refer to ⇒ page 60 .
- The fuel lines are clipped in the at the top after guiding in.
- Pay attention that the plug is seated correctly on the new lines.
- Seal the lines with suitable plugs from the Engine Bung Set - VAS6122- .
- Secure the pulling aid on the fuel lines.
- Use adhesive tape to secure the pulling aid.
- Pay attention that the pulling aid is only secured in the front area of the lines.
- At the bottom seal the shield from the slotted guide with adhesive tape so that the lines do not slide out.
- Place the fuel lines together with the shield on the opening in the longitudinal member.

Installation Position of Fuel Lines on the Shield:

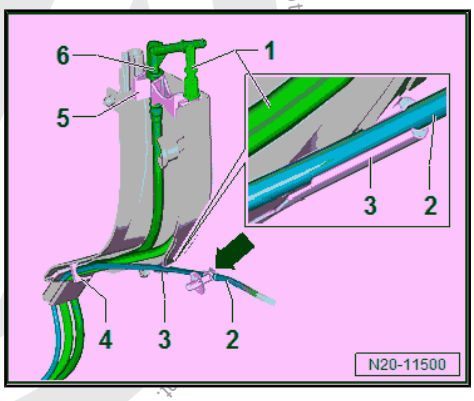

1 - Fuel Supply Line
2 - Parking/Auxiliary Heater Fuel Line
3 - Guide for the Parking/Auxiliary Heater Fuel Line
4 - Lower line guide
5 - Bracket for the Lines in the Coupling Rod Area
6 - Bleeder Line

Protected by copyright. Copying for private or commercial purposes, in part or in whole, is not permitted unless authorised by Volkswagen AG. Volkswagen AG does not guarantee or accept any liability with respect to the

Installation Position of the Fuel Lines on the Coupling Point in Engine Compartment:

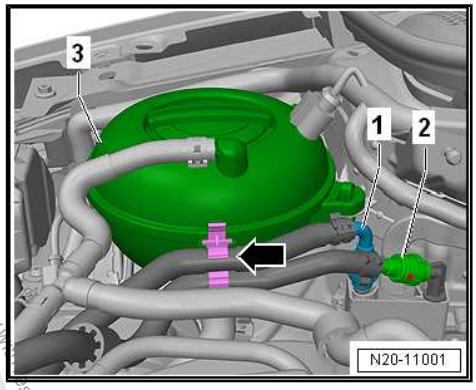

1 - Fuel Supply Line

2 - Bleeder Line

Installation Position of the Fuel Lines on the Underbody:

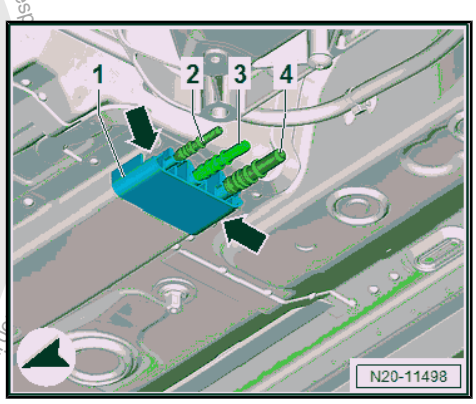

2 - Parking/Auxiliary Heater Fuel Line

3 - Fuel Supply Line

4 - Bleeder Line

Tightening Specifications:

Component	Tightening Specification
Shield nut	8 Nm

- Refer to ⇒ Body Exterior; Rep. Gr. 66 ; Wheel Housing Liner; Overview - Front Wheel Housing Liner .
- Refer to ⇒ Body Exterior; Rep. Gr. 66 ; Underbody Trim Panel; Component Location Overview - Trim Panels .

Protected by copyright. Copyright by Volkswagen AG. Volkswagen AG does not guarantee or accept any liability with respect to the correctness of information in this document. Copyright by Volkswagen AG. Copying for private or commercial purposes, in part or in whole, is not permitted unless authorised by Volkswagen AG.

4 Connector Couplings

⇒ “4.1 Connector Couplings, Disconnecting”, page 62

4.1 Connector Couplings, Disconnecting

Special tools and workshop equipment required

- Lever - Fuel Line - T10468-

Connector Coupling Allocation

Note

- *The connector couplings for fuel, vacuum and bleeder lines are color-coded. There is either a colored dot on the connector coupling, or the release button has the corresponding color. Refer to ⇒ page 62 .*
- *The connector couplings must »audibly« engage when locking.*
- *Pull on the connector coupling to check for secure fit.*

Color Coding

Connector Coupling	Color Coding on Connector Coupling
Fuel supply	Black
Fuel Return Line	Blue
Bleeder	White beige
Vacuum	Green

WARNING

The fuel line is under pressure.

Fuel poses a risk of injury to the eyes and skin.

Wear protective eyewear and protective clothing to avoid injury and contact with skin. Place a cleaning cloth around the connection point before loosening hose connections. Carefully open the connection point to release the pressure.

Version 1

Connector coupling with right and left release buttons -arrows-.

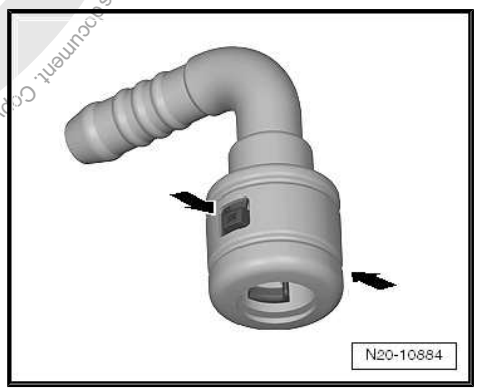

Protected by copyright. Copyright for private or commercial purposes, in part or in whole, is not permitted unless authorised by Volkswagen AG. Volkswagen AG does not guarantee or accept any liability with respect to the correctness of information in this document. Copyright by Volkswagen AG.

Opening

It is necessary to counterhold the fuel separating point -1- inside the engine compartment.

– Insert the -T10468- between the heat shield and the stop -arrow- for the fuel line -2- and counterhold it.

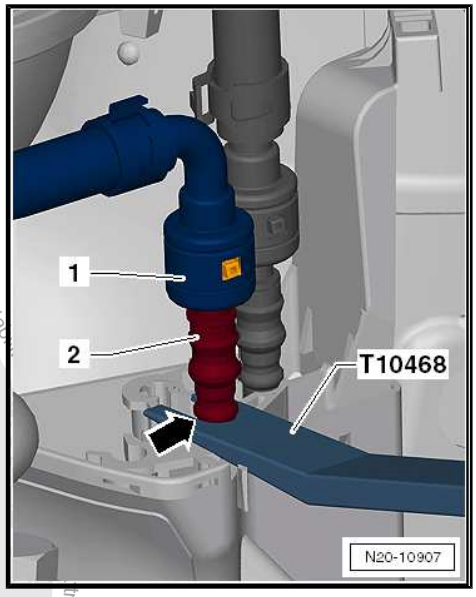

Continue for all separation points on the fuel system:

– Push the connector coupling -1- in the direction of the -arrow A-.

– Press the release buttons and hold it down.

– Disconnect the connector coupling -1- from the fuel line -2- in the direction of the -arrow B-.

Note the color coding when installing. Refer to ⇒ page 62 .

The connector couplings must »audibly« engage when locking.

– Pull on the connector coupling to check for secure fit.

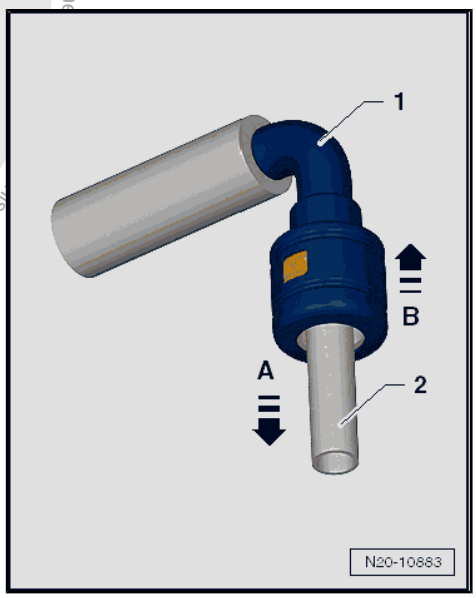

Version 2

Connector coupling with pull release -arrow-:

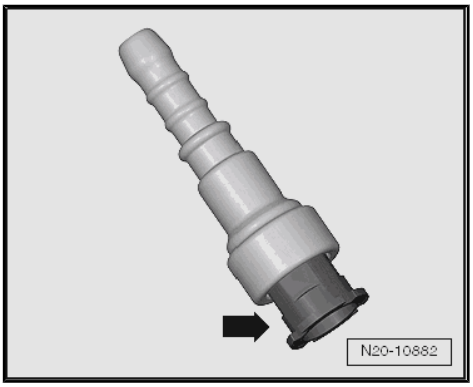

Protected by copyright. Copying for private or commercial purposes, in part or in whole, is not permitted unless authorised by Volkswagen AG. Volkswagen AG does not guarantee or accept any liability with respect to the correctness and completeness of this document. Copyright by Volkswagen AG.

Opening

– Push the connector coupling -1- in the direction of the -arrow A-.
– Pull the pull release -2- in the direction of the -arrow B-.
– Pull the connector coupling -1- off the fuel line -3- in the direction of the -arrow B-.

Note the color coding when installing. Refer to ⇒ page 62 .

The connector couplings must »audibly« engage when locking.

– Pull on the connector coupling to check for secure fit.

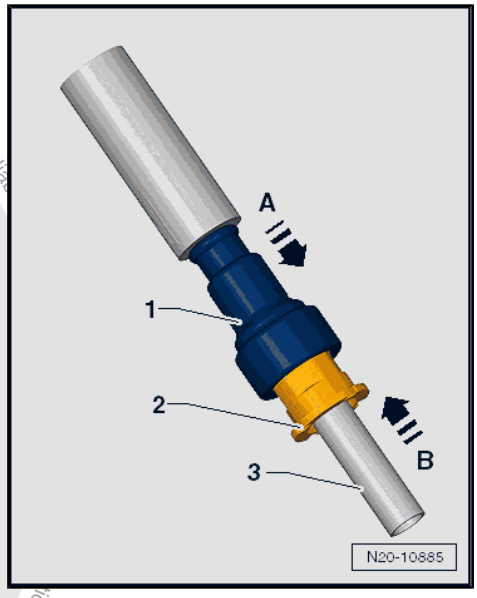

Version 3

Connector coupling with front button -arrow-:

Opening

– Press the release button -arrow- and remove the connector couplings.

Note the color coding when installing. Refer to ⇒ page 62 .

The connector couplings must »audibly« engage when locking.

– Pull on the connector coupling to check for secure fit.

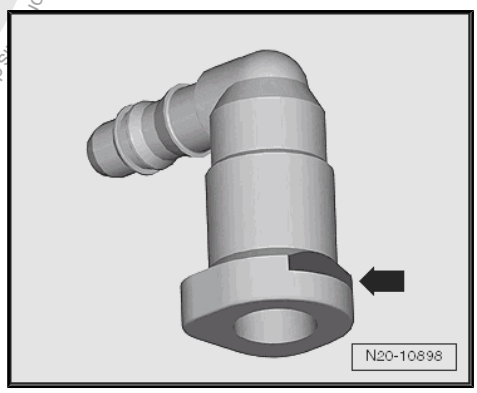

Version 4

Connector coupling with right and left release button -arrows-:

Opening

– Push the connector coupling in the direction of the -arrow A-.
– Press the release buttons -arrows- and remove the connector coupling.

Note the color coding when installing. Refer to ⇒ page 62 .

The connector couplings must »audibly« engage when locking.

– Pull on the connector coupling to check for secure fit.

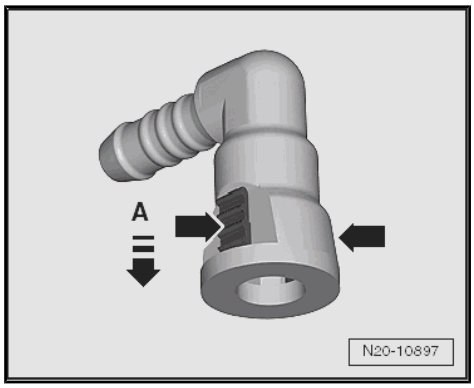

Version 5

Connector coupling with right and left release buttons -arrows-:

Opening

– Press the release buttons -arrows- and remove the connector coupling.

Note the color coding when installing. Refer to ⇒ page 62 .

The connector couplings must »audibly« engage when locking.

– Pull on the connector coupling to check for secure fit.

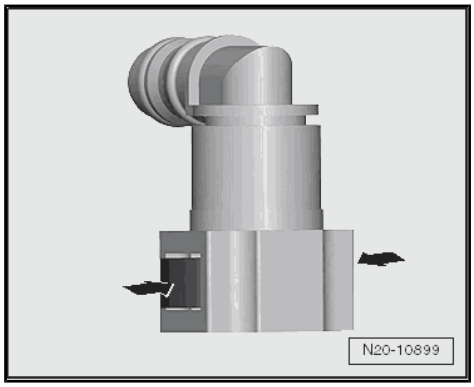

Protected by copyright. Copyright by Volkswagen AG. Volkswagen AG does not guarantee or accept any liability with respect to the correctness and completeness of this document. Copying for private or commercial purposes, in part or in whole, is not permitted unless authorised by Volkswagen AG.

Volkswagen AG. Volkswagen AG does not guarantee or accept any liability with respect to the correctness of information in this document. Copyright by Volkswagen AG. Copying for private or commercial purposes, in part or in whole, is not permitted unless authorised by Volkswagen AG.

Version 6

Connector coupling with right and left release buttons -arrows-:

Opening

– Press the connector coupling -1- in the direction of the -arrow- and hold it down.

– Press the release buttons -arrows- and remove the connector coupling.

Note the color coding when installing. Refer to ⇒ page 62 .

The connector couplings must »audibly« engage when locking.

– Pull on the connector coupling to check for secure fit.

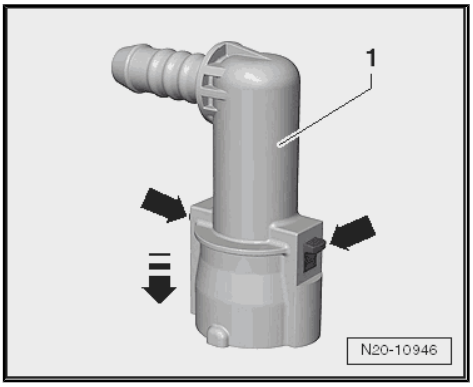

Version 7

Connector coupling -1- with right and left release buttons -2-:

Opening

– Press the connector coupling -1- in direction of the -arrow A- and hold it down.

– Push the release buttons -2- in the direction of -arrow B- and remove the connector coupling -1-.

Note the color coding when installing. Refer to ⇒ page 62 .

The connector couplings must »audibly« engage when locking.

– Pull on the connector coupling to check for secure fit.

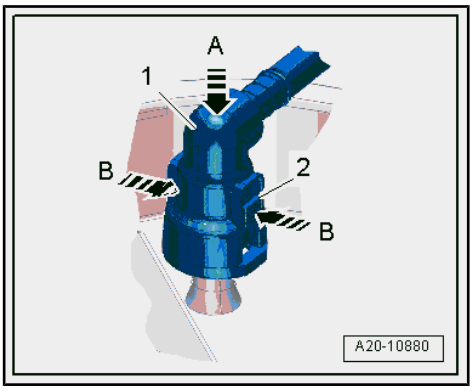

5 Fuel Filter

The pressure relief valve and the fuel filter are integrated in the fuel delivery unit and cannot be replaced separately. Refer to ⇒ “2.1 Overview - Fuel Delivery Unit/Fuel Level Sensor”, page 51 .

Protected by copyright. Copying for private or commercial purposes, in part or in whole, is not permitted unless authorised by Volkswagen AG. Volkswagen AG does not guarantee or accept any liability with respect to the correctness of information in this document. Copyright by Volkswagen AG.

6 EVAP System

⇒ “6.1 Connection Diagram - EVAP System”, page 67

⇒ “6.2 Overview - EVAP System”, page 69

⇒ “6.3 EVAP Canister, Removing and Installing”, page 70

⇒ “6.4 Fuel Tank, Checking Ventilation”, page 72

⇒ “6.5 Fuel System, Checking for Leaks”, page 76

6.1 Connection Diagram - EVAP System

⇒ “6.1.1 Connection Diagram - EVAP System, with Fuel Tank Leak Detection”, page 67

⇒ “6.1.2 Connection Diagram - EVAP System, without Fuel Tank Leak Detection”, page 68

6.1.1 Connection Diagram - EVAP System, with Fuel Tank Leak Detection

Note

The fuel tank leak detection function is based on the premise that the fuel systems creates a natural vacuum when the fuel in the fuel tank becomes colder. The temperature and pressure measurements are required for the fuel tank leak detection. The temperature sensor is integrated in the Fuel Tank Leak Detection Control Module - J909- . The Fuel Tank Pressure Sensor - G400- is installed in the pressure regulating valve. The system is considered to be closed when the measured vacuum is 2.5 mbar as the fuel tank temperature drops. If there is no vacuum, then there is a leak in the fuel system, which will result in an entry in the engine control module Diagnostic Trouble Code (DTC) memory.

Protected by copyright. Copying for private or commercial purposes, in part or in whole, is not permitted unless authorised by Volkswagen AG. Volkswagen AG does not guarantee or accept any liability with respect to the correctness of information in this document. Copyright by Volkswagen AG.

1 - EVAP Canister

- ❑ Component location: under the wheel housing liner in the right rear wheel housing
- ❑ Removing and Installing. Refer to ⇒ "6.3.2 EVAP Canister, Removing and Installing, without Fuel Tank Leak Detection", page 71 .

2 - Air Filter

3 - Pressure Regulating Valve

- ❑ With Fuel Tank Pressure Sensor - G400-

4 - Bleeder Line

- ❑ from EVAP canister to engine

5 - Cap

- ❑ Seal must not be dirty or damaged

6 - Fuel Tank Leak Detection Control Module - J909-

- ❑ With temperature sensor

7 - Fuel Supply Line

- ❑ Black

8 - Bleeder Line

- ❑ White

9 - EVAP Canister Purge Regulator Valve 1 - N80-

- ❑ Checking using the Vehicle Diagnostic Tester .

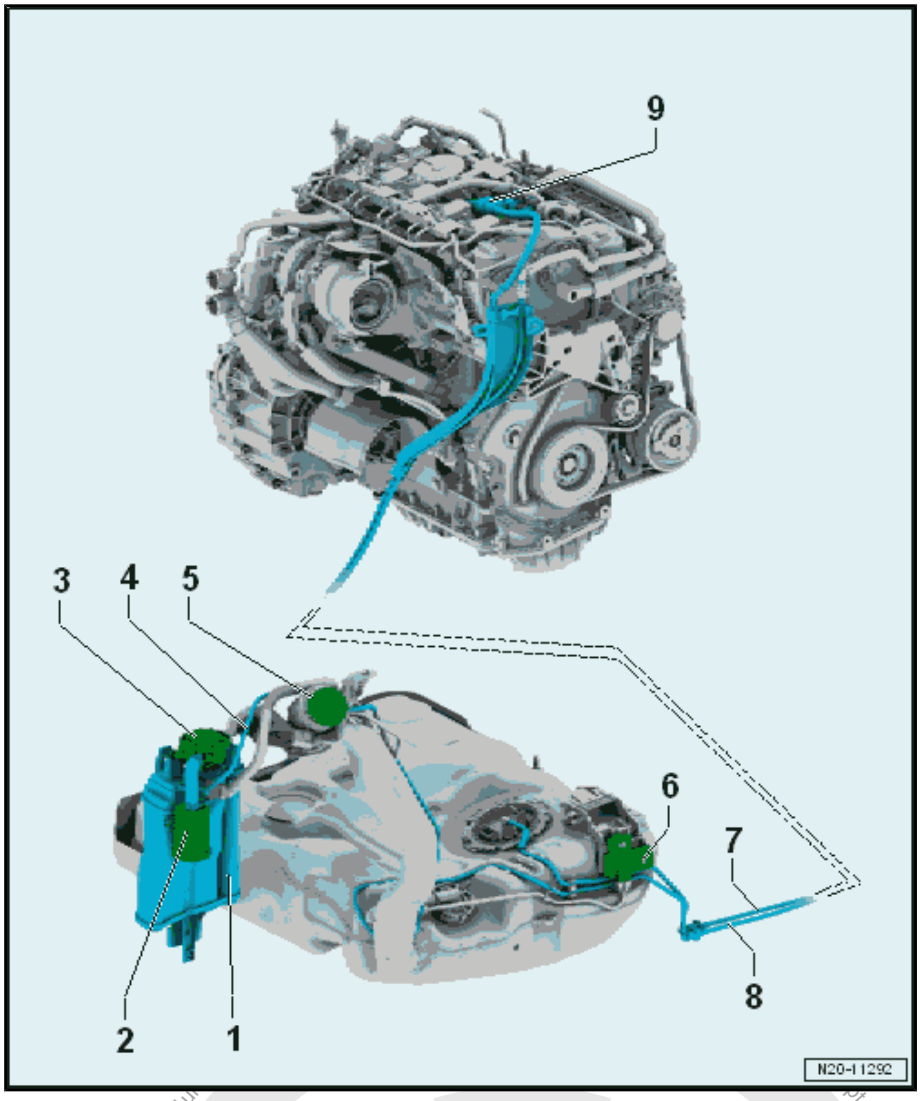

6.1.2 Connection Diagram - EVAP System, without Fuel Tank Leak Detection

Connection Diagram on EVAP Canister

1 - -A- Vent Connection

2 - -T- Connection to Fuel Tank

3 - -M- to EVAP Canister Purge Regulator Valve 1 - N80-

4 - Cap

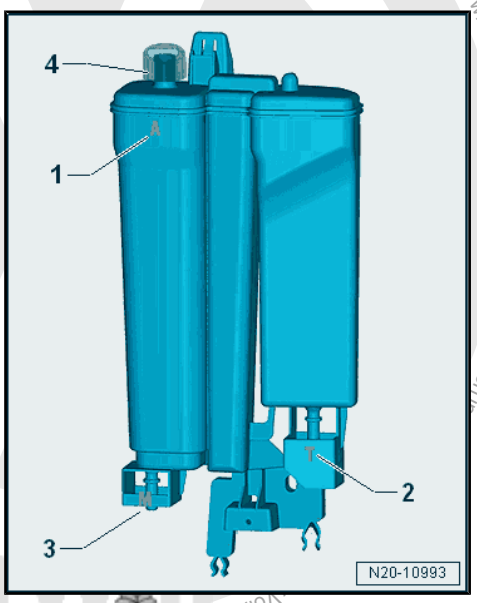

Protected by copyright. Copying for private or commercial purposes, in part or in whole, is not permitted unless authorised by Volkswagen AG. Volkswagen AG does not guarantee or accept any liability with respect to the correctness of information in this document.

6.2 Overview - EVAP System

⇒ "6.2.1 Overview - EVAP System, with Fuel Tank Leak Detection", page 69

⇒ "6.2.2 Overview - EVAP System, without Fuel Tank Leak Detection", page 70

6.2.1 Overview - EVAP System, with Fuel Tank Leak Detection

1 - Bleeder Line

- ❑ To the EVAP Canister Purge Regulator Valve 1 - N80-
- ❑ Clipped to the fuel tank
- ❑ Ventilation, Checking. Refer to ⇒ "6.4.1 Fuel Tank, Checking Ventilation, with Fuel Tank Leak Detection", page 72 .
- ❑ Connection Diagram. Refer to ⇒ Fig. ""Connection Diagram on EVAP Canister"" , page 68 .
- ❑ To disconnect, press the release button on the connecting piece
- ❑ The connector couplings must »audibly« engage when locking.
- ❑ Pull on the connector coupling to check for secure fit.
- ❑ Connector Couplings, Disconnecting. Refer to ⇒ "4.1 Connector Couplings, Disconnecting", page 62 .

2 - Bolt

- ❑ 20 Nm

3 - EVAP Canister

- ❑ Component location: at the right rear in the wheel housing under the wheel housing liner
- ❑ Removing and Installing. Refer to ⇒ "6.3.1 EVAP Canister, Removing and Installing, with Fuel Tank Leak Detection", page 70 .
- ❑ Ventilation, Checking. Refer to ⇒ "6.4.1 Fuel Tank, Checking Ventilation, with Fuel Tank Leak Detection", page 72 .

4 - Bleeder Line

- ❑ To the fuel tank
- ❑ To disconnect, press the release button on the connecting piece
- ❑ The connector couplings must »audibly« engage when locking.
- ❑ Pull on the connector coupling to check for secure fit.
- ❑ Connector Couplings, Disconnecting. Refer to ⇒ "4.1 Connector Couplings, Disconnecting", page 62 .
- ❑ Ventilation, Checking. Refer to ⇒ "6.4.1 Fuel Tank, Checking Ventilation, with Fuel Tank Leak Detection", page 72 .

Volkswagen AG. Volkswagen AG does not guarantee or accept any liability with

- ❑ Connection Diagram. Refer to ⇒ Fig. ""Connection Diagram on EVAP Canister"" , page 68 .

6.2.2 Overview - EVAP System, without Fuel Tank Leak Detection

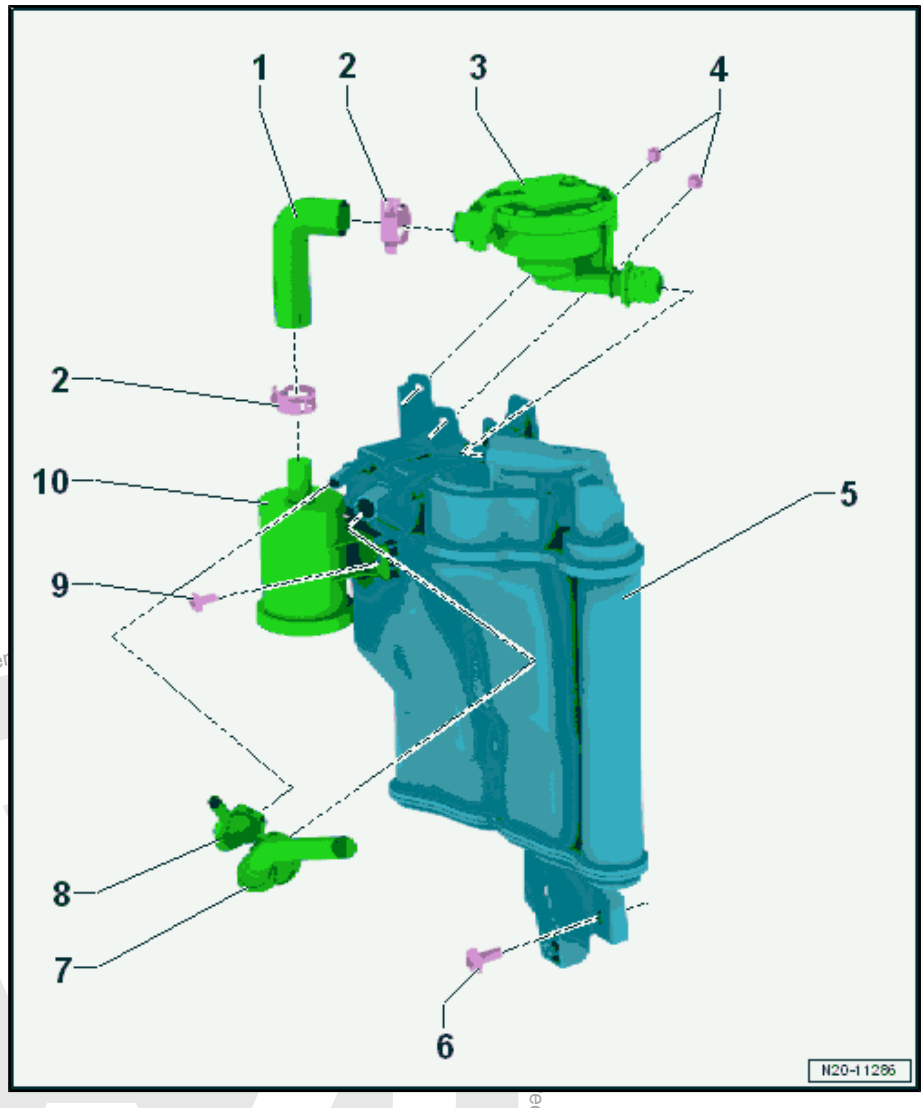

1 - Connecting Hose
- ❑ From air filter to pressure regulating valve

2 - Hose Clamps

3 - Pressure Regulating Valve
- ❑ With Fuel Tank Pressure Sensor - G400-

4 - Bolts
- ❑ 2.5 Nm

5 - EVAP Canister
- ❑ Component location: behind the wheel housing liner inside right rear wheel housing
- ❑ Removing and Installing. Refer to ⇒ "6.3.2 EVAP Canister, Removing and Installing, without Fuel Tank Leak Detection", page 71 .

6 - Bolt
- ❑ 20 Nm

7 - Bleeder Line
- ❑ To the fuel tank

8 - Bleeder Line
- ❑ To the EVAP Canister Purge Regulator Valve 1 - N80-

9 - Bolt
- ❑ 2.5 Nm

10 - Air Filter

6.3 EVAP Canister, Removing and Installing

⇒ "6.3.1 EVAP Canister, Removing and Installing, with Fuel Tank Leak Detection", page 70

⇒ "6.3.2 EVAP Canister, Removing and Installing, without Fuel Tank Leak Detection", page 71

6.3.1 EVAP Canister, Removing and Installing, with Fuel Tank Leak Detection

Removing

– Observe the safety instructions. Refer to ⇒ "1 Safety Precautions", page 1 .

Protected by copyright. Copyright by Volkswagen AG. Not for commercial purposes in part or in whole or in part, unless authorised by Volkswagen AG.

Protected by copyright. Copying for private or commercial purposes, in part or in whole, is not permitted unless authorised by Volkswagen AG. Volkswagen AG does not guarantee or accept any liability with

– Follow the guidelines for clean working conditions. Refer to ⇒ “3.1 Parking/Auxiliary Heater and Fuel System Clean Working Conditions”, page 4 .

– Remove the right rear wheel. Refer to ⇒ Suspension, Wheels, Steering; Rep. Gr. 44 ; Wheels, Tires; Changing a Wheel .

– Remove the right rear wheel housing liner. Refer to ⇒ Body Exterior; Rep. Gr. 66 ; Wheel Housing Liner; Overview - Rear Wheel Housing Liner .

– Remove the breather lines -1 and 2- from the EVAP canister. Disconnect the connector couplings. Refer to ⇒ “4.1 Connector Couplings, Disconnecting”, page 62 .

– Unclip the breather line from bracket -arrows-.

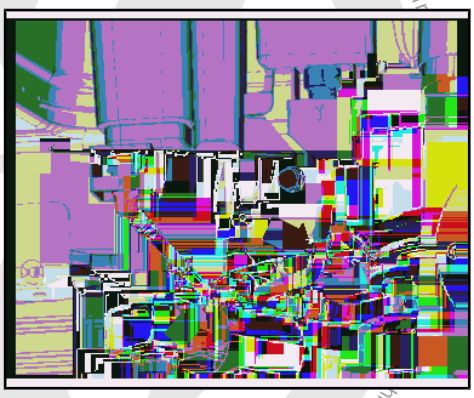

– Remove the bolt -1-.

– Press in the hook -3- using a screwdriver.

– Remove the EVAP canister -2- downward from the bracket in the direction of the -arrow-.

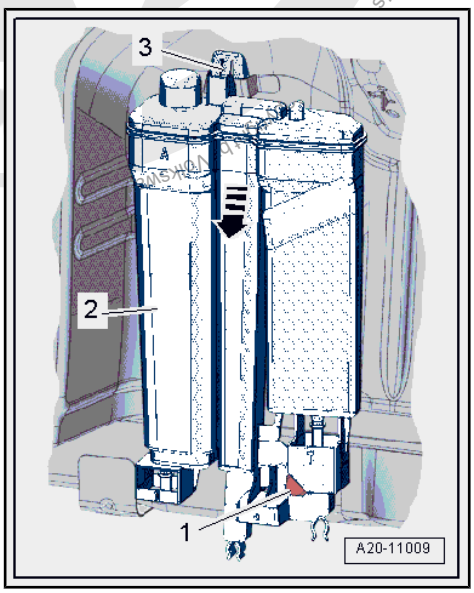

Installing

Install in reverse order of removal. Note the following:

Note

Disconnect the connector couplings. Refer to ⇒ “4.1 Connector Couplings, Disconnecting”, page 62 .

Tightening Specifications

- Refer to ⇒ “6.2.1 Overview - EVAP System, with Fuel Tank Leak Detection”, page 69
- Refer to ⇒ Body Exterior; Rep. Gr. 66 ; Wheel Housing Liner; Overview - Rear Wheel Housing Liner .
- Refer to ⇒ Suspension, Wheels, Steering; Rep. Gr. 44 ; Wheel and Tire Guide; Wheel Changing .

6.3.2 EVAP Canister, Removing and Installing, without Fuel Tank Leak Detection

Removing

– Observe the safety instructions. Refer to ⇒ “1 Safety Precautions”, page 1 .

– Follow the guidelines for clean working conditions. Refer to ⇒ “3.1 Parking/Auxiliary Heater and Fuel System Clean Working Conditions”, page 4 .

– Remove the right rear wheel. Refer to ⇒ Suspension, Wheels, Steering; Rep. Gr. 44 ; Wheels, Tires; Changing a Wheel .

– Remove the right rear wheel housing liner. Refer to ⇒ Body Exterior; Rep. Gr. 66 ; Wheel Housing Liner; Overview - Rear Wheel Housing Liner .

– Release and disconnect the connector -1-.

– Remove the breather lines -2- and -3- from the EVAP Canister.

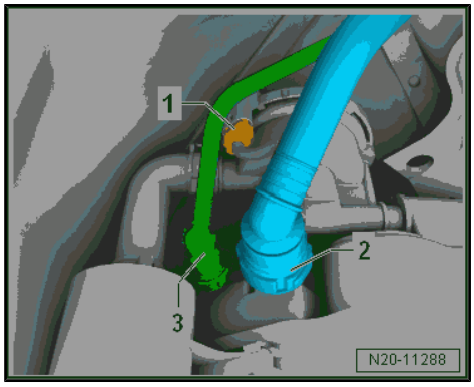

– Remove the bolt -arrow-.

– Using a screwdriver, lightly push the retainer -A- toward the luggage compartment.

– Pull the EVAP canister downward from the guide bracket and remove.

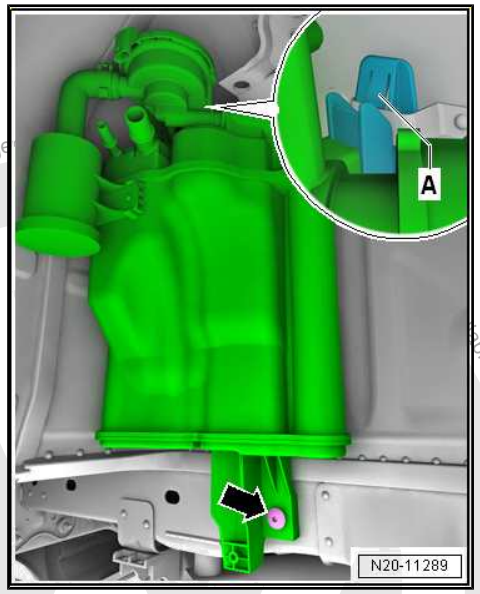

Installing

Install in reverse order of removal. Note the following:

♦ Attach the bleed lines so that they click into place.

Tightening Specifications

♦ Refer to
⇒ "6.2.2 Overview - EVAP System, without Fuel Tank Leak Detection", page 70

♦ Wheel housing liner. Refer to ⇒ Body Exterior; Rep. Gr. 66 ; Wheel Housing Liner; Overview - Rear Wheel Housing Liner .

♦ Wheels. Refer to ⇒ Suspension, Wheels, Steering; Rep. Gr. 44 ; Wheel and Tire Guide; Wheel Changing .

6.4 Fuel Tank, Checking Ventilation

⇒ "6.4.1 Fuel Tank, Checking Ventilation, with Fuel Tank Leak Detection", page 72

6.4.1 Fuel Tank, Checking Ventilation, with Fuel Tank Leak Detection

Special tools and workshop equipment required

♦ Hand Vacuum Pump - VAS6213-

♦ Pressure Tester Kit - VAS6550-

♦ Engine Bung Set - VAS6122-

EVAP Canister Purge Regulator Valve 1 - N80- , Checking:

– Pay attention to all safety precautions. Refer to
⇒ "1 Safety Precautions", page 1 .

– Follow the guidelines for clean working conditions. Refer to
⇒ "3.1 Parking/Auxiliary Heater and Fuel System Clean Working Conditions", page 4 .

– Check the DTC memory using the Vehicle Diagnostic Tester ⇒ Vehicle diagnostic tester.

– Switch off the ignition.

Protected by copyright. Copying for private or commercial purposes, in part or in whole, is not permitted unless authorised by Volkswagen AG. Copyright by Volkswagen AG. No liability with respect to the correctness of information in this document.

– Release and remove the breather line -2-. Disconnect the connector couplings. Refer to
⇒ “4.1 Connector Couplings, Disconnecting”, page 62 .

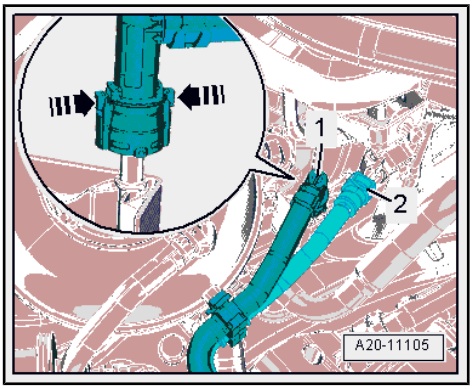

– Connect the -VAS6213- to line leading to the EVAP Canister Purge Regulator Valve 1 - N80- using the -VAS6550/3-1- and a commercially available hose.

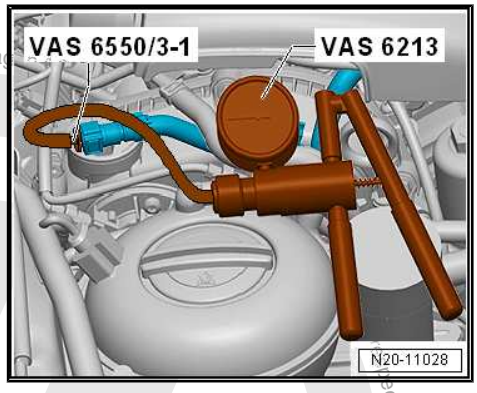

– Set the slide ring -1- on the -VAS6213- in position -A- for “vacuum”.

– Press the -VAS6213- several times. A vacuum must form.

If No Vacuum Forms:

– Check the line to the EVAP Canister Purge Regulator Valve 1 - N80- for leaks and damage.

If no Malfunction was Detected:

EVAP Canister Purge Regulator Valve 1 - N80- is not OK.

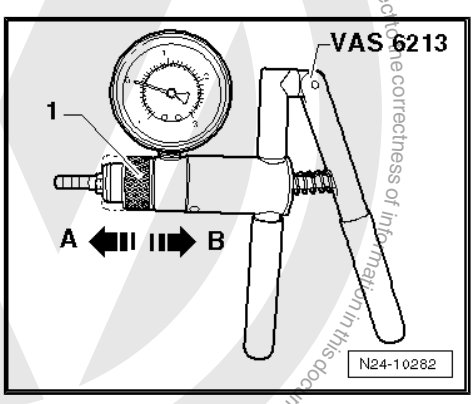

If a Vacuum Forms:

EVAP Canister Purge Regulator Valve 1 - N80- is OK:

– Release and remove the breather line -2-. Disconnect the connector couplings. Refer to
⇒ “4.1 Connector Couplings, Disconnecting”, page 62 .

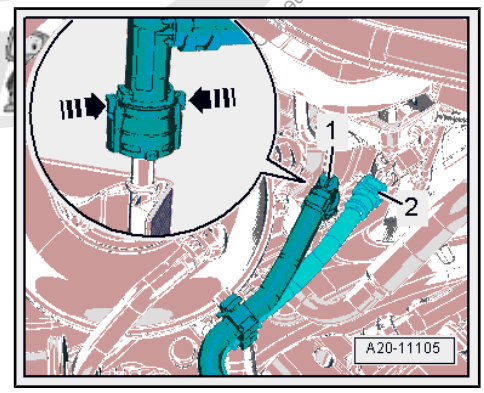

Protected by copyright. Copying for private or commercial purposes, in part or in whole, is not permitted unless authorised by Volkswagen AG. Volkswagen AG does not guarantee or accept any liability with respect to the correctness of information in this document.

– Connect the - VAS6213- with the -VAS6550/3-2- to the EVAP canister line.

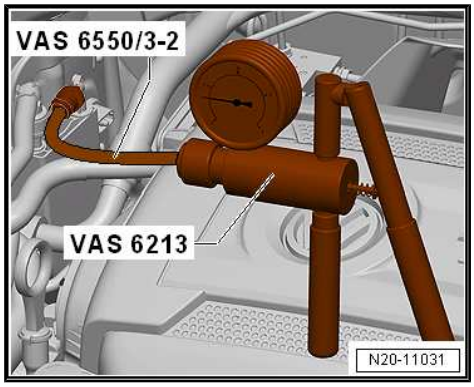

– Set the slide ring -1- on the -VAS6213- in position -A- for “vacuum”.

– Press the -VAS6213- several times. No vacuum should be built up.

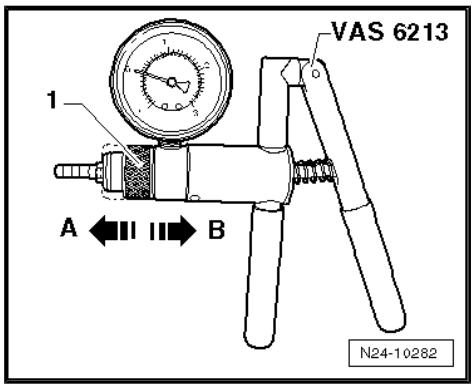

If a Vacuum Forms:

– Remove the right rear wheel housing liner. Refer to ⇒ Body Exterior; Rep. Gr. 66 ; Wheel Housing Liner; Overview - Rear Wheel Housing Liner .

– Remove the cap -4- from the connection -1-.

– Check the vent connection -A- on the EVAP canister for contamination and clean it if necessary.

– Repeat the test.

If no Vacuum Forms:

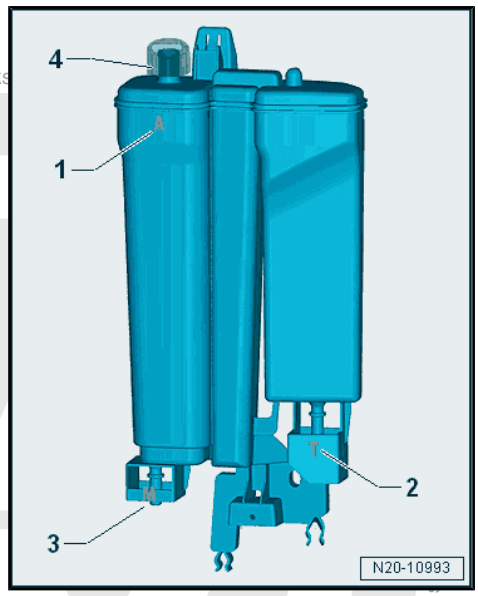

– Remove the breather lines -2- at the connection -T- from the EVAP canister. Disconnect the connector couplings. Refer to ⇒ “4.1 Connector Couplings, Disconnecting”, page 62 .

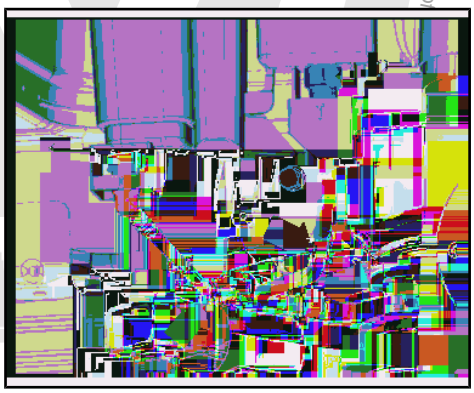

Protected by copyright. Copying for private or commercial purposes, in part or in whole, is not permitted unless authorised by Volkswagen AG. Volks

– Seal the connection -3- using suitable service equipment.

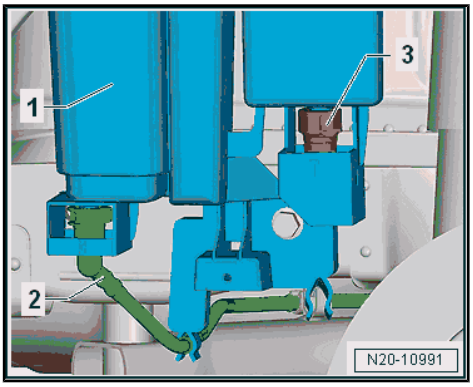

– Seal the connection -A- on the EVAP canister -2- with a suitable plug from the -VAS6122- -1-.

– Press the -VAS6213- several times. A vacuum must form.

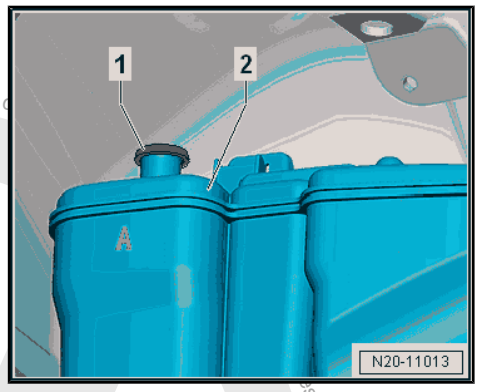

If no vacuum forms:

– Remove the breather lines -2- at the connection -M- from the EVAP canister -1-. Disconnect the connector couplings. Refer to ⇒ “4.1 Connector Couplings, Disconnecting”, page 62 .

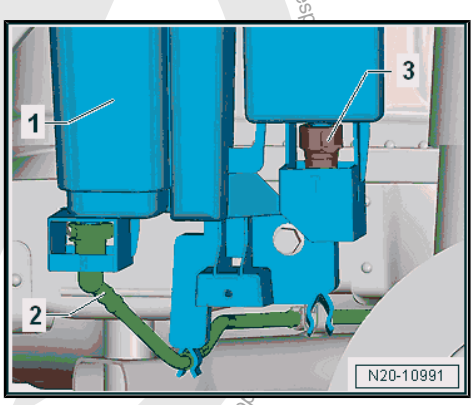

– Connect the -VAS6213- to the connection -M- on the EVAP canister -1- using a commercially available hose -3-.

- Connection -2- is sealed using suitable materials.
- Connection -A- is sealed with a plug from the -VAS6122- . Refer to ⇒ page 75 .

– Press the -VAS6213- several times. A vacuum must form.

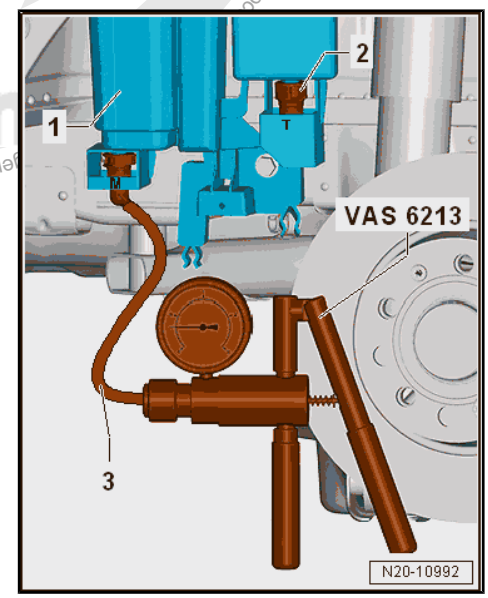

Protected by copyright. Copyright by Volkswagen AG. Private or commercial purposes, in part or in whole, is not permitted unless authorised by Volkswagen AG.

If a Vacuum Forms:

– Check the line between the separating point -2- in the engine compartment and the connection -M- on the EVAP canister, replacing if necessary.

If no Vacuum Forms:

– Replace the EVAP canister. Refer to ⇒ "6.3.1 EVAP Canister, Removing and Installing, with Fuel Tank Leak Detection", page 70 .

If Vacuum Builds up and the Line is OK:

– Check the line. Refer -item 4- ⇒ Item 4 (page 69) between the connection -T- on the EVAP canister and the fuel tank. Replace if necessary.

The Line to the Fuel Tank is OK:

– Check the fuel tank for leaks.

– Check the cap ⇒ Item 7 (page 7) on the fuel filler neck.

If a Vacuum Builds up and the Lines are OK:

Check the EVAP Canister Purge Regulator Valve 1 - N80- by proceeding as follows. Refer to ⇒ page 72 .

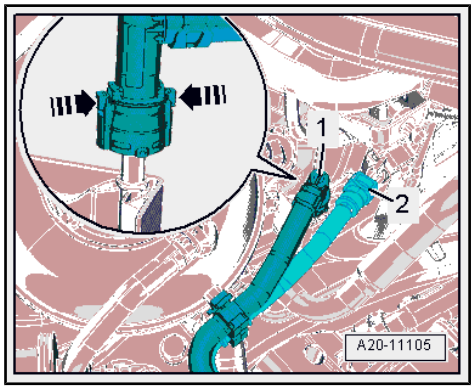

6.5 Fuel System, Checking for Leaks

⇒ "6.5.1 Fuel System, Checking for Leaks", page 76

6.5.1 Fuel System, Checking for Leaks

Special tools and workshop equipment required

- Evaporative Emissions Tester - KLI 9210-
- Evaporative Emissions Tester - Adapter 55 - KLI 9210/55-1-
- Hose Clamps - Up To 25 mm - 3094-

Connector Coupling	Color Coding on Connector Coupling
Fuel supply	Black
Fuel Return Line	Blue
Bleeder	White or beige

-KLI 9210- preparation:

Note

Depending on the version, the appearance of the -KLI 9210- may vary.

– Check on the -KLI 9210- whether there is enough fluid in the smoke generator.

Protected by copyright. Copying for private or commercial purposes, in part or in whole, is not permitted unless authorised by Volkswagen AG. Volkswagen AG does not guarantee or accept any liability with respect to the correctness of information in this document. Copyright by Volkswagen AG.

– Set the valve -D- to “Hold”.
– Open the nitrogen bottle -H-.
– Connect the measuring hose -G- to the self-test connection -B-.
– Set the valve -D- to “Test”.
– Using the pressure reducer -J- adjust the pressure to 25 mbar (10 in. H_2O).
– Set the valve -D- to “Hold”.
• The pressure must now be maintained for a minimum of two minutes.

  If the pressure is not maintained, check the tester.

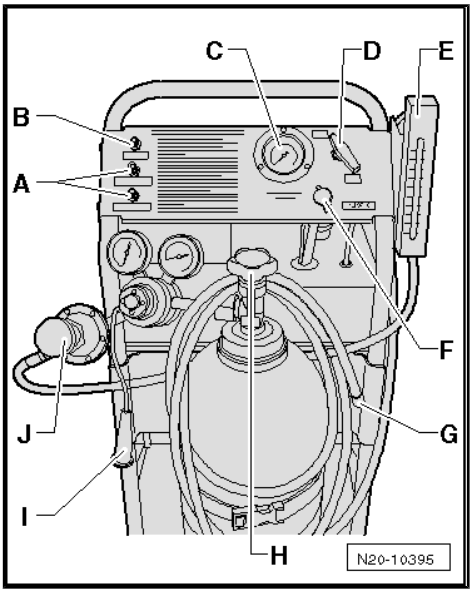

Fuel System, Checking for Leaks:

– Connect the -KLI 9210/55-1- to the breather lines -A- “white markings” as illustrated.

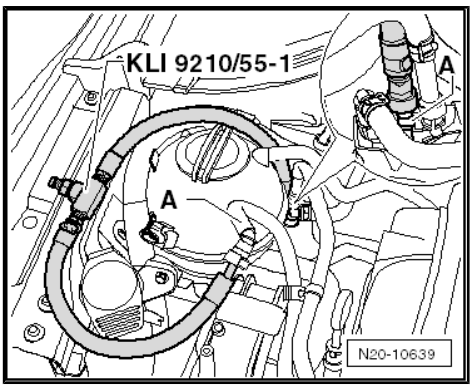

– Connect the measuring hose -G- from the -KLI 9210- to the -KLI9210/55-1- .
– Connect the -KLI 9210- to the vehicle battery.
– Remove right rear wheel housing liner.

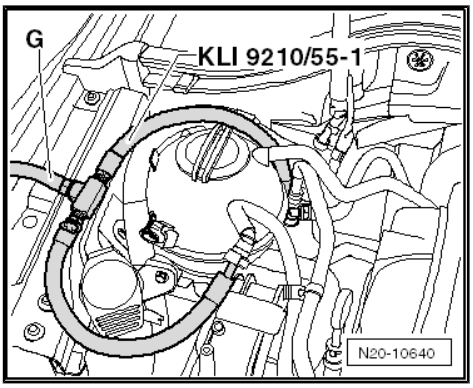

– Tightly close the hose to the air filter -arrow- using a hose clamp.

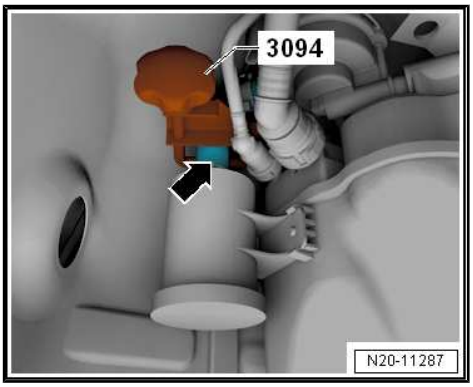

Protected by copyright. Copying for private or commercial purposes, in part or in whole, is not permitted unless authorised by Volkswagen AG. Volkswagen AG does not guarantee or accept any liability with respect to the correctness of information in this document. Copyright by Volkswagen AG.

– Set the valve -D- to “Test”. The fuel system is now filled.

– Watch the pressure gauge -C- and the flow meter -E-. The fuel system is filled if the flow rate decreases and the pressure increases to 10 in. H2O (25 mbar).

– After the pressure has stabilized, set the valve -D- to “Hold”.

• The pressure must not drop below 8 in. H2O (20 mbar) after five minutes.

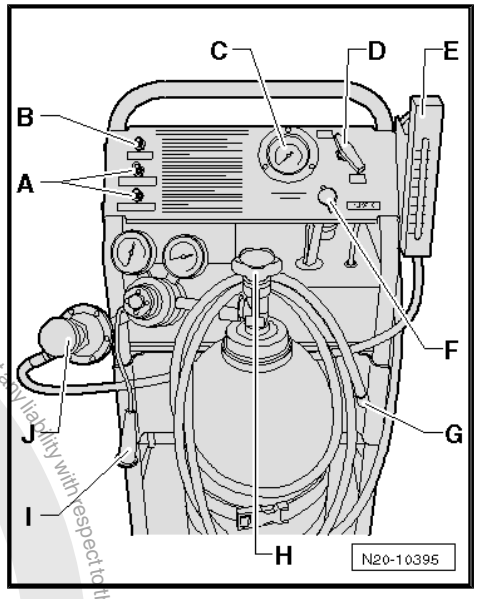

If the pressure drops or if no pressure develops, then locate the leak as follows:

– Set the valve -D- to “Test” and fill the system with smoke.

– While the fuel system is being filled, press the smoke generator button -I- for approximately one minute.

The fuel system is now under pressure and filled with smoke.

– Check all the lines, hoses and the fuel filler cap for escaping smoke.

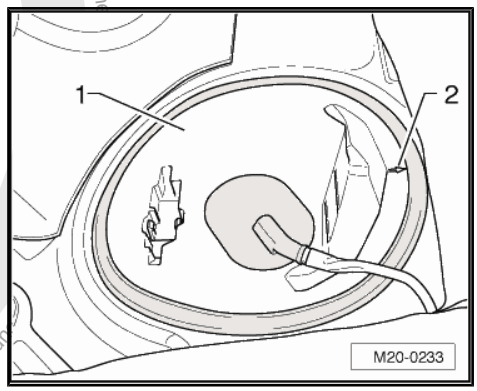

Note

♦ *Illuminate components and hoses with a strong flood light, the smoke will be more visible.*

♦ *An ultrasonic sensor tester or commercially available leak spray can also be used to locate leaks.*

♦ *Depending on how long fault finding lasts, the smoke generator button may need to be pressed again. This ensures there is enough smoke present in the fuel system.*

♦ *The installation opening inside the passenger compartment must be opened to check the flange on the fuel pump and fuel filter.*

– Replace any leaking hoses or components.

Protected by copyright. Copying for private or commercial purposes, in part or in whole, is not permitted unless authorised by Volkswagen AG. Volkswagen AG does not guarantee or accept any liability with respect to the document. Copyright by Volkswagen AG.

7 Accelerator Mechanism

⇒ “7.1 Overview - Accelerator Pedal Module”, page 79

⇒ “7.2 Accelerator Pedal Position Sensors G79 / G185 , Removing and Installing”, page 80

7.1 Overview - Accelerator Pedal Module

1 - Bolt

- ❑ 6 Nm

2 - Connector

- ❑ Pull on the connector to make sure it is engaged correctly and securely.

3 - Accelerator Pedal Module - GX2-

- ❑ Contains

  Accelerator Pedal Position Sensor - G79-

  Accelerator Pedal Position Sensor 2 - G185-

- ❑ Removing and Installing. Refer to ⇒ “7.2 Accelerator Pedal Position Sensors G79 / G185 , Removing and Installing”, page 80 .

commercial purposes, in part or in whole, is not
Protected by
Volkswagen AG.

7.2 Accelerator Pedal Position Sensors - G79- / -G185- , Removing and Installing

Removing

– Fold the carpet -1- forward in the direction of the -arrow-.

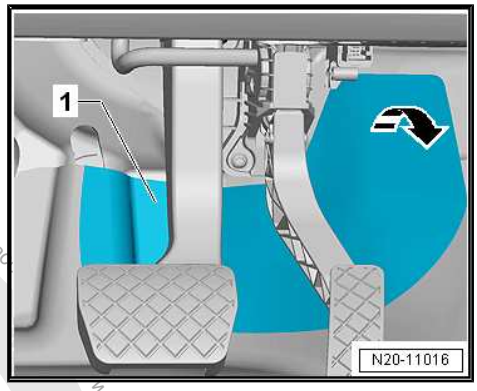

– Release and remove the connector -2- from the Accelerator Pedal Module - GX2- .

– Remove the bolt -1-.

– Remove the accelerator pedal module -3- from the mounting.

Installing

Install in reverse order of removal. Note the following:

Tightening Specifications

♦ Refer to
⇒ “7.1 Overview - Accelerator Pedal Module”, page 79

Protected by copyright. Copying for private or commercial purposes, in part or in whole, is not permitted unless authorised by Volkswagen AG. Volkswagen AG does not guarantee or accept any liability with respect to the correctness of information in this document. Copyright by Volkswagen AG.

8 Fuel Pump

⇒ “8.1 Transfer Fuel Pump G6 , Checking”, page 81

⇒ “8.2 Fuel Pump Control Module J538 , Removing and Installing”, page 116

8.1 Transfer Fuel Pump - G6- , Checking

⇒ “8.1.1 Fuel Pumps, Checking Function and Power Supply”, page 81

⇒ “8.1.2 Fuel Pump, Checking Function and Power Supply, Vehicles with Engine Code CWVA”, page 84

⇒ “8.1.3 Fuel Pressure, Checking”, page 87

⇒ “8.1.4 Fuel Pressure, Checking, Vehicles with Engine Code CWVA”, page 91

⇒ “8.1.5 Residual Pressure, Checking”, page 95

⇒ “8.1.6 Residual Pressure, Checking, Vehicles with Engine Code CWVA”, page 99

⇒ “8.1.7 Fuel Delivery Rate, Checking”, page 104

⇒ “8.1.8 Fuel Delivery Rate, Checking, Vehicles with Engine Code CWVA”, page 110

8.1.1 Fuel Pumps, Checking Function and Power Supply

Special tools and workshop equipment required

- Trim Removal Wedge - 3409-
- Multimeter, for example Analog/Digital Multimeter - FLU83III-
- Connector Test Set - VAG1594D-
- Vehicle Diagnostic Tester

Test conditions:

- The battery voltage must be at least 11.5 V. Charge if necessary. Refer to ⇒ Electrical Equipment; Rep. Gr. 27 ; Battery; Battery, Charging .
- Fuel Pump Control Module - J538- fuse OK. Refer to ⇒ Wiring diagrams, Troubleshooting & Component locations.
- Fuel Pump Control Module - J538- is OK use the Vehicle Diagnostic Tester .

Test sequence:

Note

The output diagnostic test mode checks the fuel pump function.

– Pay attention to all safety precautions. Refer to ⇒ “1 Safety Precautions”, page 1 .

– Follow the guidelines for clean working conditions. Refer to ⇒ “3.1 Parking/Auxiliary Heater and Fuel System Clean Working Conditions”, page 4 .

Protected by copyright. Copyright for private or commercial purposes, in part or in whole is not permitted unless authorised by Volkswagen AG. Volkswagen AG does not guarantee or accept any liability with respect to the correctness of information in this document. Copyright by Volkswagen AG.

– Connect the Vehicle Diagnostic Tester -1- as follows:

– Connect the diagnostic cable connector -2- to the diagnostic connection inside the driver footwell.

– Switch the ignition on.

– Select the fuel pump output diagnostic test mode in OBD.

The fuel pump must now accelerate slowly up to the maximum RPM.

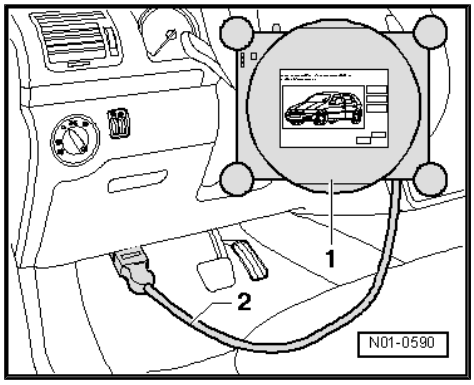

Note

- *The fuel pump runs very quietly.*
- *If the output diagnostic test mode is performed several times in succession, it may be necessary to briefly start the motor before repeating the output diagnostic test mode.*

– Switch off the ignition.

If the fuel pump does not start:

Golf Sportsvan:

– Remove the right rear seat. Refer to ⇒ Body Interior; Rep. Gr. 72 ; Rear Seats; Bench Seat / Single Seat, Removing and Installing .

– Partially loosen the cover -1- in the carpet at the separating line -arrow-.

– Do not separate the cover completely from the carpet so that later it will be installed correctly.

– Only loosen so far that the cover can be folded up.

– Fold up the cover in the direction of the -arrow-.

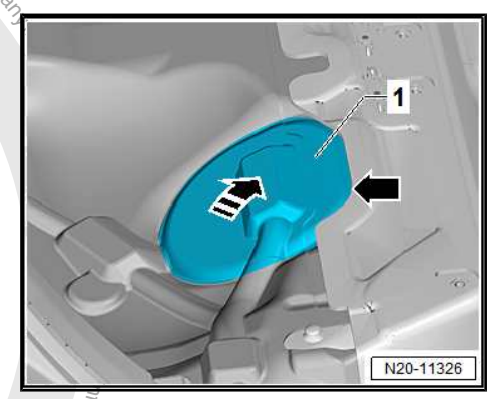

Golf and Golf Wagon:

– Remove the rear bench seat. Refer to ⇒ Body Interior; Rep. Gr. 72 ; Rear Seats; Bench Seat / Single Seats, Removing and Installing .

Continuation for All Vehicles:

– Unclip the right sealing flange cover -1- at the tabs -arrows- using the -3409- .

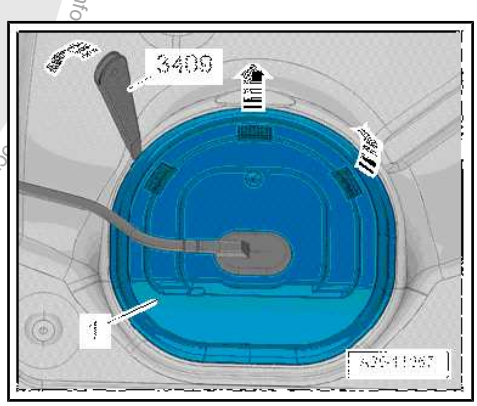

Protected by copyright. Copying for private or commercial purposes, in part or in whole, is not permitted unless authorized by Volkswagen AG. Volkswagen AG does not guarantee or accept any liability with respect to the correctness of information in this document. Copyright by Volkswagen AG.

– Unclip the grommet -1- downward out of the cover -2-.

– Guide the cover -2- on the wiring harness -3- toward the rear.

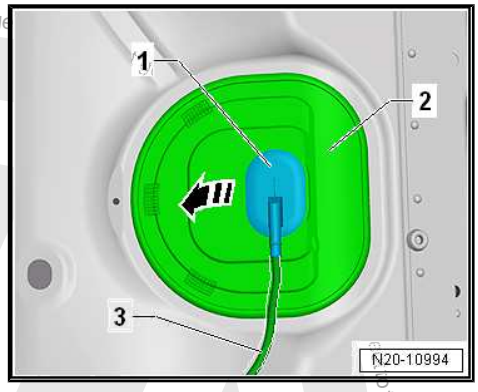

– Lift the tab -2- in the direction of the -arrow A- by using a finger to reach between the floor panel and the fuel tank.

– At the same time, carefully pull the Fuel Pump Control Module - J538- -1- out of the mount at the wiring harness -3- in the direction of the -arrow B-.

– Remove the Fuel Pump Control Module - J538- toward the inside between the fuel tank and the floor panel.

– Pull on the connector on the Fuel Pump Control Module - J538- without pushing the locking mechanism to make sure it is secure. Repeat the fuel pump functionality test if the connector was not connected correctly.

– Release and remove the connector from the Fuel Pump Control Module - J538- .

– Check the contacts on the connector and on the Fuel Pump Control Module - J538- for damage.

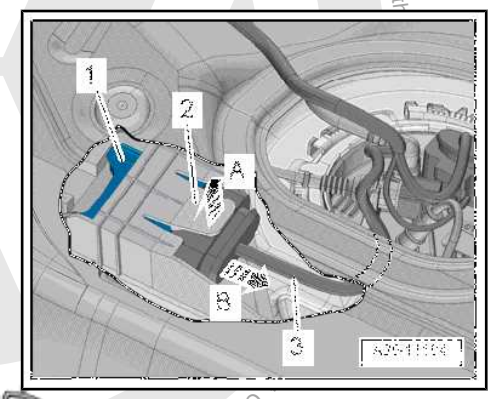

– Check the voltage supply between contacts -3- and -4- using the Multimeter . Refer to ⇒ Wiring diagrams, Troubleshooting & Component locations.

– To do so, use the Connector Test Set - VAG1594D- .

– Switch the ignition on.

• Specified value: approximately battery voltage

If the specified value is not obtained:

– Locate and repair the open circuit according to the wiring diagram. Refer to ⇒ Wiring diagrams, Troubleshooting & Component locations.

If the specified value is obtained:

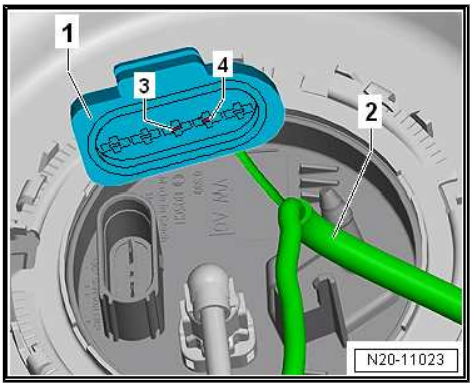

– Pull on the connector -1- without pressing the release to make sure the connection is secure. Repeat the fuel pump functionality test if the connector was not connected correctly.

– Release and disconnect the connector -1-.

– Check the contacts on the connector and on the fuel delivery unit for damage.

– Check the wiring harness between the Fuel Pump Control Module - J538- and the fuel delivery unit. Refer to ⇒ Wiring diagrams, Troubleshooting & Component locations.

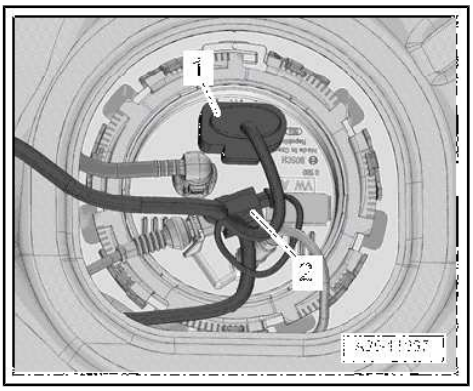

Protected by copyright. Copying for private or commercial purposes, in part or in whole, is not permitted unless authorised by Volkswagen AG. Volkswagen AG.
Copyright by Volkswagen AG.

If no faults can be found:

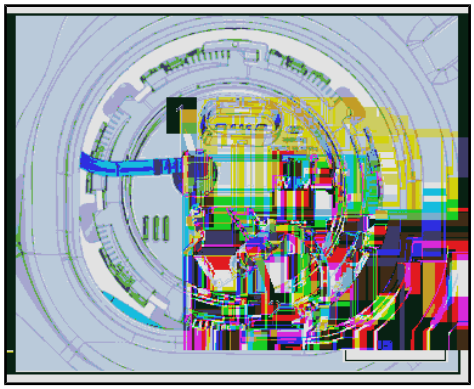

> **WARNING**
>
> *The fuel line is under pressure.*
>
> *Fuel poses a risk of injury to the eyes and skin.*
>
> *Wear protective eyewear and protective clothing to avoid injury and contact with skin. Place a cleaning cloth around the connection point before loosening hose connections. Carefully open the connection point to release the pressure.*

– Drain the fuel tank. Refer to
⇒ “1.3 Fuel Tank, Draining”, page 35 .

– Remove the fuel lines -1- from the flange. Disconnect the connector couplings. Refer to
⇒ “4.1 Connector Couplings, Disconnecting”, page 62 .

Vehicles with Parking Heater:

– Remove the fuel line -2- to the Metering Pump - V54- for the parking heater on the sealing flange.

– Open the lower clamp to do this.

– Carefully remove the fuel line -2-.

Continuation for All Vehicles:

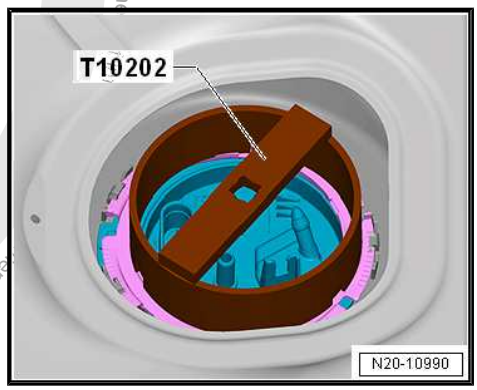

– Open the locking ring using the Wrench - Fuel Sending Unit - T10202- .

– Check if the wiring between the flange and fuel pump is connected.

– Inspect the contacts for damage.

If no Open Circuits are Found:

– If the fuel pump is faulty, replace the fuel delivery unit. Refer to
⇒ “2.2 Fuel Delivery Unit/Fuel Level Sensor, Removing and Installing”, page 52 .

8.1.2 Fuel Pump, Checking Function and Power Supply, Vehicles with Engine Code CWVA

Special tools and workshop equipment required

- ♦ Trim Removal Wedge - 3409-
- ♦ Multimeter, for example Analog/Digital Multimeter - FLU83III-
- ♦ Connector Test Set - VAG1594D-
- ♦ Vehicle Diagnostic Tester

Test Conditions:

- The battery voltage must be at least 11.5 V. Charge if necessary. Refer to ⇒ Electrical Equipment; Rep. Gr. 27 ; Battery; Battery, Charging .
- Fuse OK. Refer to ⇒ Wiring diagrams, Troubleshooting & Component locations.

Protected by copyright. Copying or printing of this document, in whole or in part, is not permitted unless authorised by Volkswagen AG. Volkswagen AG does not guarantee or accept any liability with respect to the correctness of this document. Copyright by Volkswagen AG.

Test Sequence:

Note

The output diagnostic test mode checks the fuel pump function.

– Pay attention to all safety precautions. Refer to ⇒ “1 Safety Precautions”, page 1 .

– Follow the guidelines for clean working conditions. Refer to ⇒ “3.1 Parking/Auxiliary Heater and Fuel System Clean Working Conditions”, page 4 .

– Connect the Vehicle Diagnostic Tester -1- as follows:

– Connect the diagnostic cable connector -2- to the diagnostic connection inside the driver footwell.

– Switch the ignition on.

– Select the fuel pump output diagnostic test mode in OBD.

The fuel pump must now accelerate slowly up to the maximum RPM.

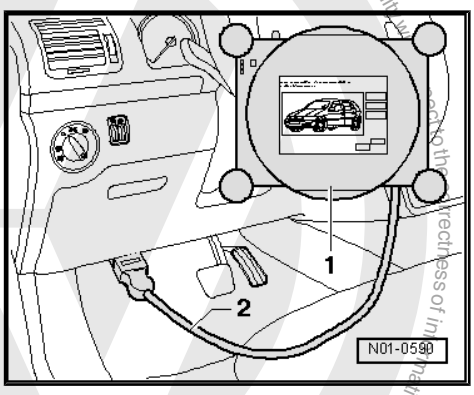

Note

- *The fuel pump runs very quietly.*
- *If the output diagnostic test mode is performed several times in succession, it may be necessary to briefly start the motor before repeating the output diagnostic test mode.*

– Switch off the ignition.

If the fuel pump does not start:

Golf Sportsvan:

– Remove the right rear seat. Refer to ⇒ Body Interior; Rep. Gr. 72 ; Rear Seats; Bench Seat / Single Seat, Removing and Installing .

– Partially loosen the cover -1- in the carpet at the separating line -arrow-.

– Do not separate the cover completely from the carpet so that later it will be installed correctly.

– Only loosen so far that the cover can be folded up.

– Fold up the cover in the direction of the -arrow-.

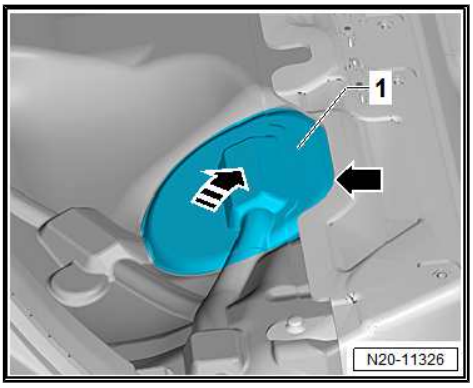

Golf and Golf Wagon:

– Remove the rear bench seat. Refer to ⇒ Body Interior; Rep. Gr. 72 ; Rear Seats; Bench Seat / Single Seats, Removing and Installing .

Protected by copyright. Copyright by Volkswagen AG. Volkswagen AG does not guarantee or accept any liability with respect to the correctness of information in this document. Copyright by Volkswagen AG. Copying for commercial purposes, in part or in whole, is not permitted unless authorised by Volkswagen AG.

Continuation for All Vehicles:

– Unclip the right sealing flange cover -1- at the tabs -arrows- using the -3409- .

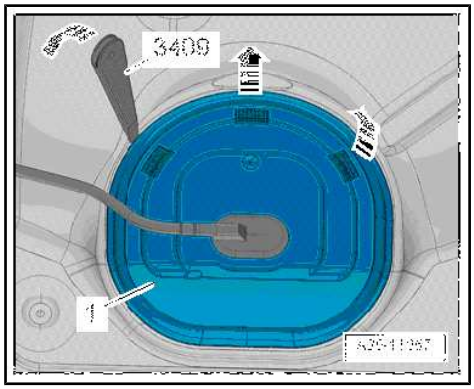

– Unclip the grommet -1- downward out of the cover -2-.

– Guide the cover -2- on the wiring harness -3- toward the rear.

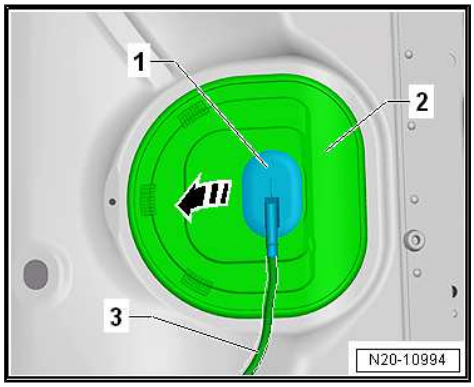

– Pull on the connector -arrow- without pressing the release to make sure the connection is secure.

– Repeat the fuel pump output diagnostic test mode if the connector was not connected correctly.

– Release and disconnect the connector -arrow-.

– Check the contacts on the connector and on the fuel delivery unit for damage.

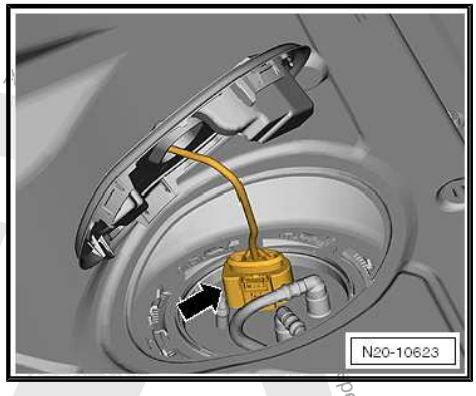

– Connect the -VAS5565- to the connector and to the fuel delivery unit.

– Connect an Analog/Digital Multimeter to the wires -1- and -5- on the -VAS5565- .

– Switch the ignition on.

• Specified value: approximately battery voltage

If the specified value is not obtained:

– Locate and repair the open circuit according to the wiring diagram. Refer to ⇒ Wiring diagrams, Troubleshooting & Component locations.

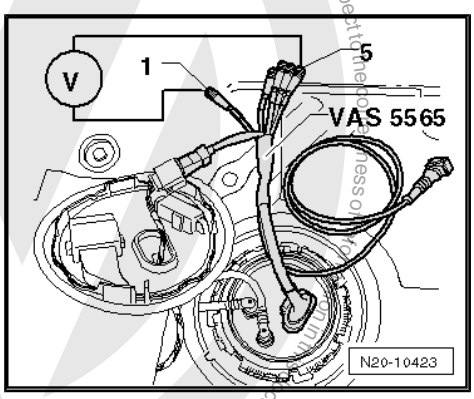

Protected by copyright. Copying for private or commercial purposes, in part or in whole, is not permitted unless authorised by Volkswagen AG. Volkswagen AG does not guarantee or accept any liability with respect to the correctness of information. Copyright by Volkswagen AG.

If no faults can be found:

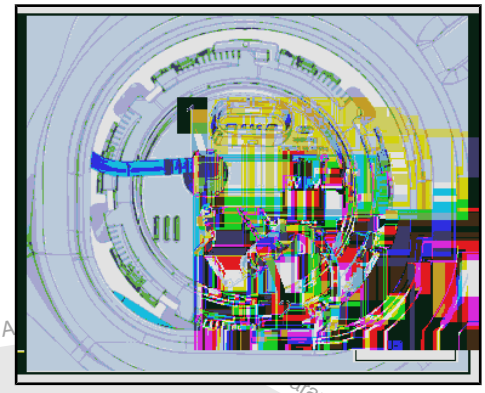

> **WARNING**
>
> *The fuel line is under pressure.*
>
> *Fuel poses a risk of injury to the eyes and skin.*
>
> *Wear protective eyewear and protective clothing to avoid injury and contact with skin. Place a cleaning cloth around the connection point before loosening hose connections. Carefully open the connection point to release the pressure.*

– Drain the fuel tank. Refer to
⇒ “1.3 Fuel Tank, Draining”, page 35 .

– Remove the fuel lines -1- from the flange. Disconnect the connector couplings. Refer to
⇒ “4.1 Connector Couplings, Disconnecting”, page 62 .

Vehicles with Parking Heater:

– Remove the fuel line -2- to the Metering Pump - V54- for the parking heater on the sealing flange.

– Open the lower clamp to do this.

– Carefully remove the fuel line -2-.

Continuation for All Vehicles:

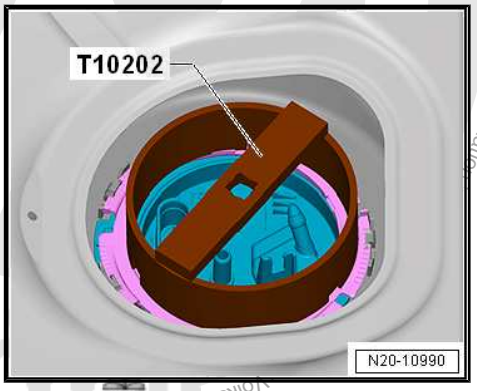

– Open the locking ring using the -T10202- .

– Check if the wiring between the flange and fuel pump is connected.

– Inspect the contacts for damage.

If no open circuits are found:

– If the fuel pump is faulty, replace the fuel delivery unit. Refer to
⇒ “2.2 Fuel Delivery Unit/Fuel Level Sensor, Removing and Installing”, page 52 .

8.1.3 Fuel Pressure, Checking

Special tools and workshop equipment required

- Trim Removal Wedge - 3409-
- Pressure Tester Kit - VAS6550-
- Pressure Tester Kit - Adapter Set - Hose 3 - VAS6550/3-3-
- Pressure Tester Kit - Adapter Set - Hose 4 - VAS6550/3-4-
- Vehicle Diagnostic Tester

Conditions:

- Power supply is OK.
⇒ “8.1.1 Fuel Pumps, Checking Function and Power Supply”, page 81 .

– Pay attention to all safety precautions. Refer to
⇒ “1 Safety Precautions”, page 1 .

– Follow the guidelines for clean working conditions. Refer to
⇒ “3.1 Parking/Auxiliary Heater and Fuel System Clean Working Conditions”, page 4 .

Protected by copyright. Copying for private or commercial purposes, in part or in whole, is not permitted unless authorised by Volkswagen AG. Volkswagen AG does not guarantee or accept any liability with respect to the correctness of information

– Remove the supply line -1-. Disconnect the connector couplings. Refer to
⇒ “4.1 Connector Couplings, Disconnecting”, page 62 .

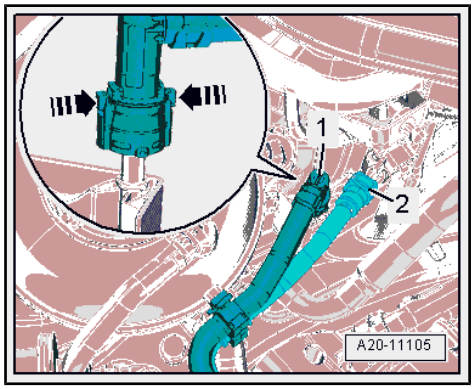

WARNING

The fuel line is under pressure.

Fuel poses a risk of injury to the eyes and skin.

Wear protective eyewear and protective clothing to avoid injury and contact with skin. Place a cleaning cloth around the connection point before loosening hose connections. Carefully open the connection point to release the pressure.

– Collect leaking fuel with a cleaning cloth.

– Connect the -VAS6550/1- to the connection -A- on the -VAS6550- .

– Connect the -VAS6550/1- to the fuel supply line -1- to the engine.

– Connect the -VAS6550/2- to the connection -B- on the -VAS6550- .

– Connect the fuel line to the fuel tank with the -VAS6550- via the -VAS6550/2- .

– Pull on the connector couplings to check them for secure fit.

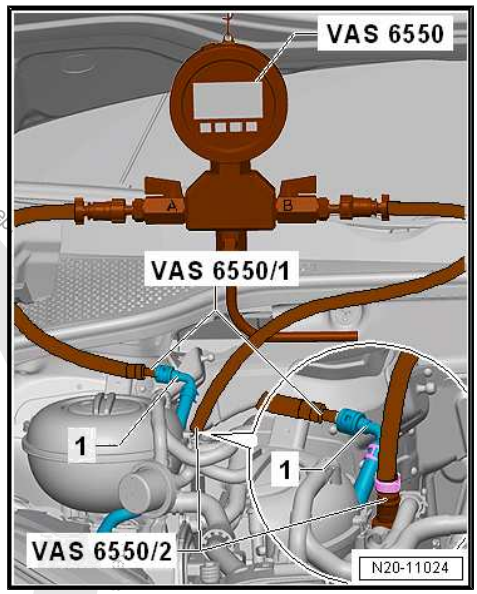

Protected by copyright. Copying for private or commercial purposes, in part or in whole, is not permitted unless authorised by Volkswagen AG. Volkswagen AG does not guarantee or accept any liability with respect to the correctness of information in this document. Copyright by Volkswagen AG.

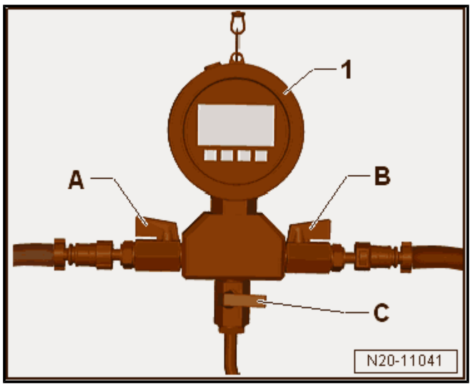

– Make sure that the drain valve -C- on the Pressure Tester -1- is closed.

– The shut-off valves -A- and -B- on the Pressure Tester Kit - VAS6550- -1- are opened.

– Connect the Vehicle Diagnostic Tester .

– Select the fuel pump output diagnostic test mode in OBD.

Note

♦ *The fuel pump is now activated to build up the fuel pressure.*

♦ *If the output diagnostic test mode is performed several times in succession, it may be necessary to briefly start the motor before repeating the output diagnostic test mode.*

– Read the fuel pressure on the pressure gauge.

• Specified value: 4.0 to 7.0 bar.

If the fuel pressure is OK, check the residual pressure. Refer to ⇒ “8.1.5 Residual Pressure, Checking”, page 95 .

If the specified value is exceeded:

– The pressure relief valve in the fuel delivery unit is faulty.

– Replace the fuel delivery unit. Refer to ⇒ “2.2 Fuel Delivery Unit/Fuel Level Sensor, Removing and Installing”, page 52 .

If the specified value is not obtained:

Proceed as follows to check the fuel pressure at the fuel delivery unit:

Golf Sportsvan:

– Remove the right rear seat. Refer to ⇒ Body Interior; Rep. Gr. 72 ; Rear Seats; Bench Seat / Single Seat, Removing and Installing .

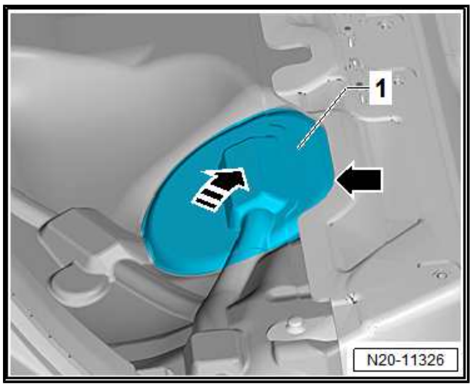

– Partially loosen the cover -1- in the carpet at the separating line -arrow-.

– Do not separate the cover completely from the carpet so that later it will be installed correctly.

– Only loosen so far that the cover can be folded up.

– Fold up the cover in the direction of the -arrow-.

Golf and Golf Wagon:

– Remove the rear bench seat. Refer to ⇒ Body Interior; Rep. Gr. 72 ; Rear Seats; Bench Seat / Single Seats, Removing and Installing .

Protected by copyright. Copying for private or commercial purposes, in part or in whole, is not permitted unless authorised by Volkswagen AG. Volkswagen AG does not guarantee or accept any liability with respect to the correctness of information in this document. Copyright by Volkswagen AG.

Continuation for All Vehicles:

– Unclip the sealing flange cover -1- at the tabs -arrows- using the -3409- .

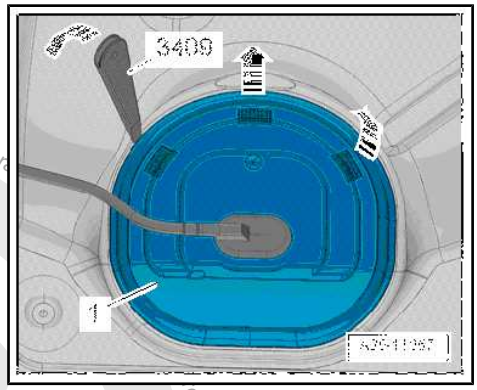

– Unclip the grommet -1- downward out of the cover -2-.

– Guide the cover -2- on the wiring harness -3- toward the rear.

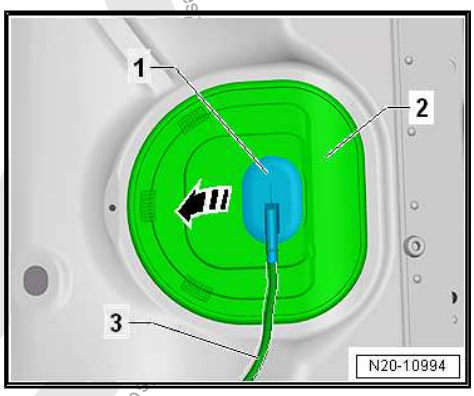

– Lift the tab -2- in the direction of the -arrow A- by using a finger to reach between the floor panel and the fuel tank.

– At the same time, pull the Fuel Pump Control Module -1- on the wiring harness -3- in the direction of the -arrow B- carefully out of the mount.

– Remove the Fuel Pump Control Module - J538- toward the inside between the fuel tank and the floor panel.

– Move the Fuel Pump Control Module - J538- to the side with the connector connected.

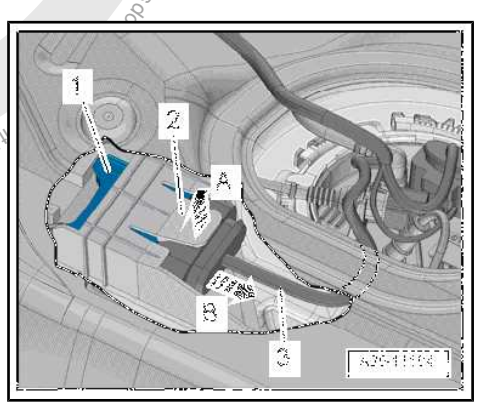

– Remove the fuel lines -1- from the flange. Disconnect the connector couplings. Refer to
⇒ “4.1 Connector Couplings, Disconnecting”, page 62 .

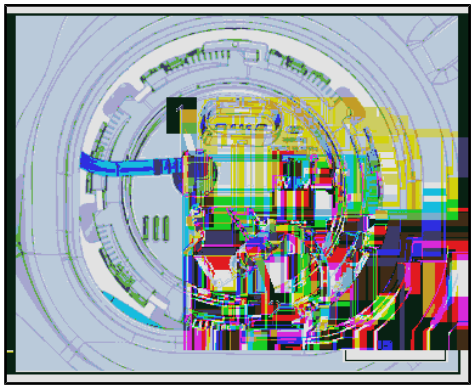

WARNING

The fuel line is under pressure.

Fuel poses a risk of injury to the eyes and skin.

Wear protective eyewear and protective clothing to avoid injury and contact with skin. Place a cleaning cloth around the connection point before loosening hose connections. Carefully open the connection point to release the pressure.

Protected by copyright. Copying for private or commercial purposes, in part or in whole, is not permitted unless authorised by Volkswagen AG. Volkswagen AG does not guarantee

– Connect the -VAS6550- to the fuel delivery unit -1- using the -VAS6550/3-4- .

– Connect the -VAS6550/3-3- between the -VAS6550- and the fuel supply line -2-.

– Pull on the connector couplings to check them for secure fit.

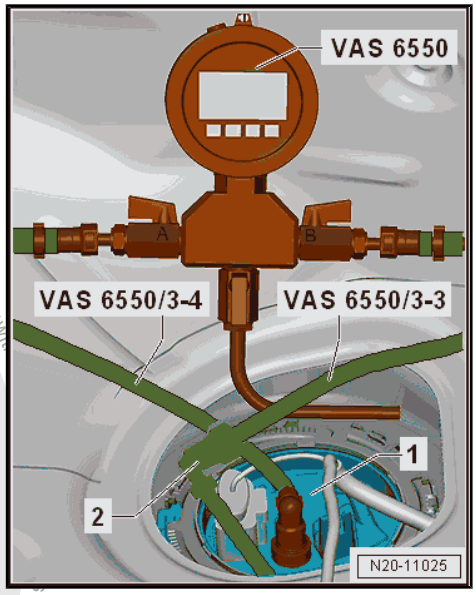

– Make sure that the drain valve -C- on the Pressure Tester -1- is closed.

The shut-off valves -A- and -B- on the -VAS6550- -1- are opened.

– Repeat the output diagnostic test mode to build up the fuel pressure again.

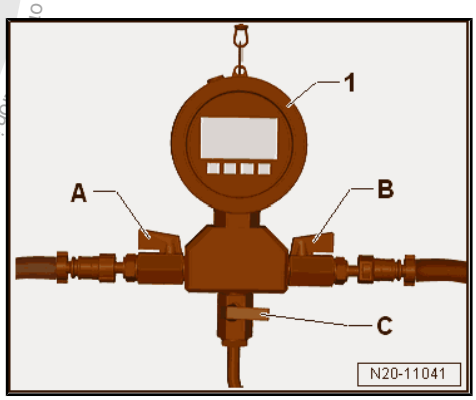

If the specified value is obtained:

– Check the fuel lines for possible restrictions (kinks) or blockages.

– Check the fuel line for leaks and damage.

If the specified value is not obtained:

– Remove the fuel delivery unit (refer to ⇒ “2.2 Fuel Delivery Unit/Fuel Level Sensor, Removing and Installing”, page 52) and inspect it for debris.

– Make sure all hoses -arrows- are connected.

– Check the fuel lines for possible restrictions (kinks) or blockages.

– Check the fuel lines for leaks and damage.

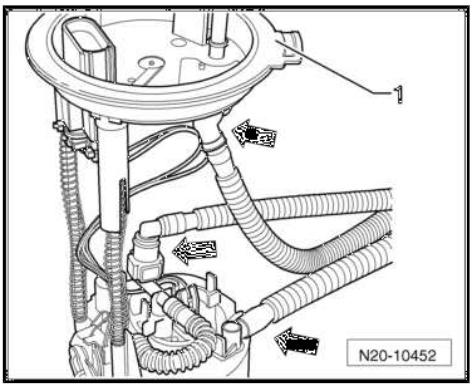

If no error can be found:

– If the fuel pump is faulty, replace the fuel delivery unit. Refer to ⇒ “2.2 Fuel Delivery Unit/Fuel Level Sensor, Removing and Installing”, page 52 .

8.1.4 Fuel Pressure, Checking, Vehicles with Engine Code CWVA

Special tools and workshop equipment required

- Trim Removal Wedge - 3409-
- Pressure Tester Kit - VAS6550-
- Pressure Tester Kit - Adapter Set - Hose 3 - VAS6550/3-3-
- Pressure Tester Kit - Adapter Set - Hose 4 - VAS6550/3-4-
- Vehicle Diagnostic Tester

Protected by copyright. Copying for private or commercial purposes, in part or in whole, is not permitted unless authorised by Volkswagen AG. Volkswagen AG does not guarantee or accept any liability with respect to the contents in this document. Copyright by Volkswagen AG.

Conditions:

- Power supply is OK.
  ⇒ “8.1.1 Fuel Pumps, Checking Function and Power Supply”, page 81 .

– Pay attention to all safety precautions. Refer to
  ⇒ “1 Safety Precautions”, page 1 .

– Follow the guidelines for clean working conditions. Refer to
  ⇒ “3.1 Parking/Auxiliary Heater and Fuel System Clean Working Conditions”, page 4 .

– Remove the supply line -1-. Disconnect the connector couplings. Refer to
  ⇒ “4.1 Connector Couplings, Disconnecting”, page 62 .

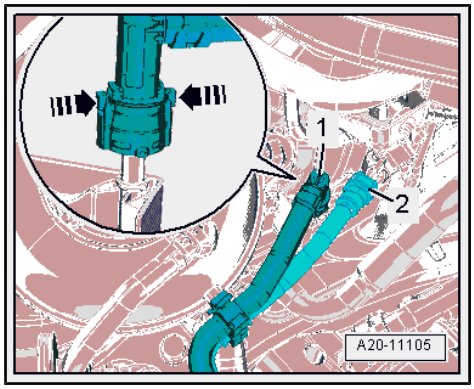

WARNING

The fuel line is under pressure.

Fuel poses a risk of injury to the eyes and skin.

Wear protective eyewear and protective clothing to avoid injury and contact with skin. Place a cleaning cloth around the connection point before loosening hose connections. Carefully open the connection point to release the pressure.

– Collect leaking fuel with a cleaning cloth.

– Connect the -VAS6550/1- to the connection -A- on the -VAS6550- .

– Connect the -VAS6550/1- to the fuel supply line -1- to the engine.

– Connect the -VAS6550/2- to the connection -B- on the -VAS6550- .

– Connect the fuel line to the fuel tank with the -VAS6550- via the -VAS6550/2-

– Pull on the connector couplings to check them for secure fit.

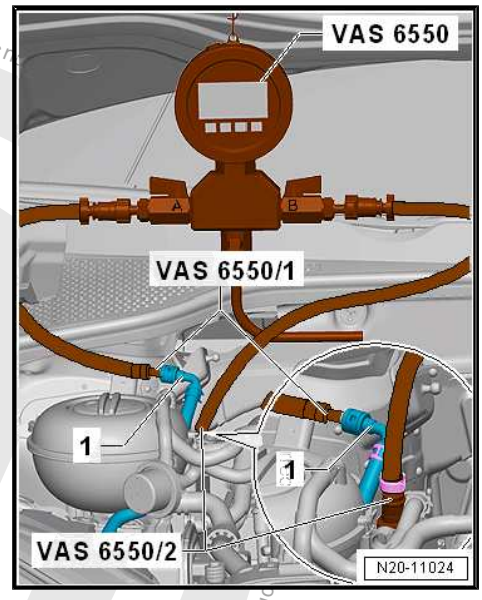

Protected by copyright. Copying for private or commercial purposes, in part or in whole, is not permitted unless authorised by Volkswagen AG. Copyright by Volkswagen AG.

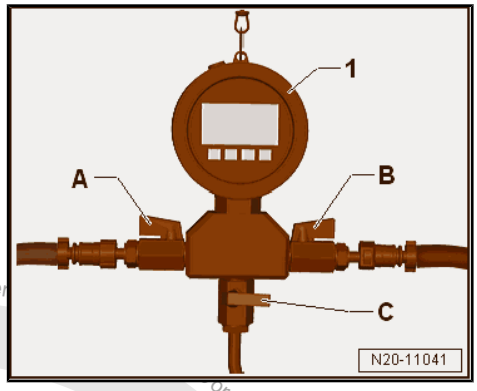

– Make sure that the drain valve -C- on the Pressure Tester -1- is closed.
– The shut-off valves -A- and -B- on the -VAS6550- -1- are opened.
– Connect the Vehicle Diagnostic Tester .
– Select the fuel pump output diagnostic test mode in OBD.

Note

♦ *The fuel pump is now activated to build up the fuel pressure.*
♦ *If the output diagnostic test mode is performed several times in succession, it may be necessary to briefly start the motor before repeating the output diagnostic test mode.*

– Read the fuel pressure on the pressure gauge.
• Specified value: approximately 4.0 bar

If the fuel pressure is OK, check the residual pressure. Refer to ⇒ "8.1.5 Residual Pressure, Checking", page 95 .

If the specified value is exceeded:

– The pressure relief valve in the fuel delivery unit is faulty.
– Replace the fuel delivery unit. Refer to ⇒ "2.2 Fuel Delivery Unit/Fuel Level Sensor, Removing and Installing", page 52 .

If the specified value is not obtained:

Proceed as follows to check the fuel pressure at the fuel delivery unit:

Golf Sportsvan:

– Remove the right rear seat. Refer to ⇒ Body Interior; Rep. Gr. 72 ; Rear Seats; Bench Seat / Single Seat, Removing and Installing .

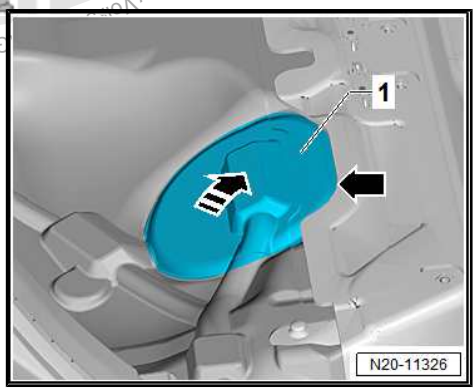

– Partially loosen the cover -1- in the carpet at the separating line -arrow-.
– Do not separate the cover completely from the carpet so that later it will be installed correctly.
– Only loosen so far that the cover can be folded up.
– Fold up the cover in the direction of the -arrow-.

Golf and Golf wagon:

– Remove the rear bench seat. Refer to ⇒ Body Interior; Rep. Gr. 72 ; Rear Seats; Bench Seat / Single Seats, Removing and Installing .

Copyright by Volkswagen AG. Volkswagen AG does not accept any liability with respect to the correctness of information in this document. Copyright by Volkswagen AG. Volkswagen AG does not permit third parties to make use of this document or parts thereof for commercial purposes or to make it available to third parties for private or commercial purposes. Copyright by Volkswagen AG.

Continuation for All Vehicles:

– Unclip the sealing flange cover -1- at the tabs -arrows- using the -3409- .

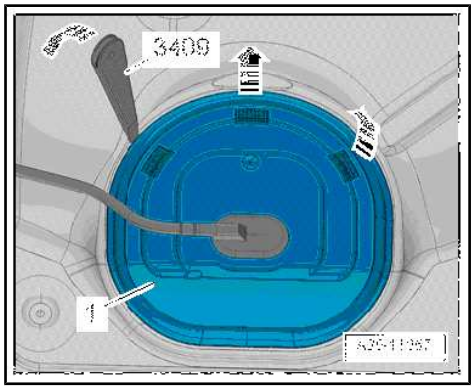

– Unclip the grommet -1- downward out of the cover -2-.

– Guide the cover -2- on the wiring harness -3- toward the rear.

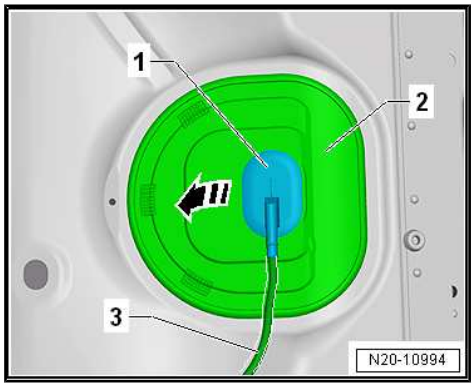

– Remove the fuel lines -1- from the flange. Disconnect the connector couplings. Refer to
⇒ “4.1 Connector Couplings, Disconnecting”, page 62 .

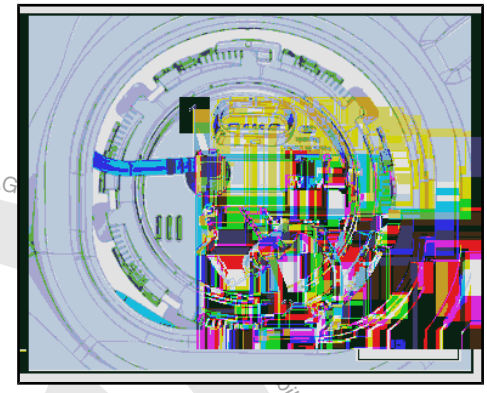

WARNING

The fuel line is under pressure.

Fuel poses a risk of injury to the eyes and skin.

Wear protective eyewear and protective clothing to avoid injury and contact with skin. Place a cleaning cloth around the connection point before loosening hose connections. Carefully open the connection point to release the pressure.

– Connect the -VAS6550- to the fuel delivery unit -1- using the -VAS6550/3-4- .

– Connect the -VAS6550/3-3- between the -VAS6550- and the fuel supply line -2-.

– Pull on the connector couplings to check them for secure fit.

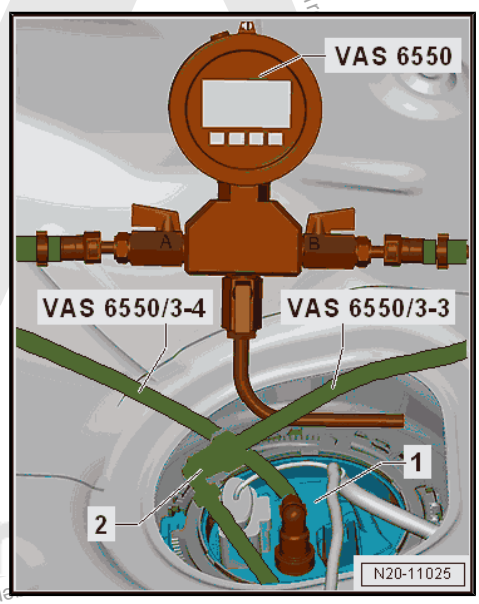

Protected by copyright. Copying for private or commercial purposes, in part or in whole, is not permitted unless authorised by Volkswagen AG. Volkswagen AG

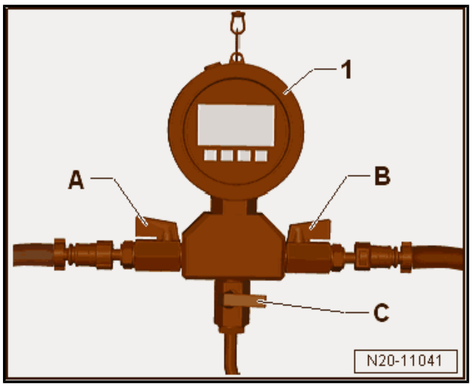

– Make sure that the drain valve -C- on the Pressure Tester -1- is closed.

– The shut-off valves -A and B- and -B- on the -VAS6550- -1- are opened.

– Repeat the output diagnostic test mode to build up the fuel pressure again.

If the specified value is obtained:

– Check the fuel lines for possible restrictions (kinks) or blockages.

– Check the fuel line for leaks and damage.

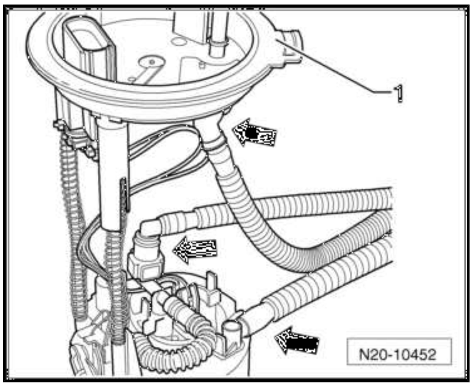

If the specified value is not obtained:

– Remove the fuel delivery unit (refer to ⇒ “2.2 Fuel Delivery Unit/Fuel Level Sensor, Removing and Installing”, page 52) and inspect it for debris.

– Make sure all hoses -arrows- are connected.

– Check the fuel lines for possible restrictions (kinks) or blockages.

– Check the fuel lines for leaks and damage.

If no error can be found:

– If the fuel pump is faulty, replace the fuel delivery unit. Refer to ⇒ “2.2 Fuel Delivery Unit/Fuel Level Sensor, Removing and Installing”, page 52 .

8.1.5 Residual Pressure, Checking

Special tools and workshop equipment required

♦ Trim Removal Wedge - 3409-

♦ Pressure Tester Kit - VAS6550-

♦ Pressure Tester Kit - Adapter Set - Hose 3 - VAS6550/3-3-

♦ Pressure Tester Kit - Adapter Set - Hose 4 - VAS6550/3-4-

♦ Vehicle Diagnostic Tester

– Pay attention to all safety precautions. Refer to ⇒ “1 Safety Precautions”, page 1 .

– Follow the guidelines for clean working conditions. Refer to ⇒ “3.1 Parking/Auxiliary Heater and Fuel System Clean Working Conditions”, page 4 .

• Fuel pressure is OK and the -VAS6550- is connected. Check the fuel pressure. Refer to ⇒ “8.1.3 Fuel Pressure, Checking”, page 87 .

Protected by copyright. Copying for private or commercial purposes, in part or in whole, is not permitted unless authorised by Volkswagen AG. Volkswagen AG does not guarantee or accept any liability with respect to the correctness of information in this document. Copyright by Volkswagen AG.

– Connect the -VAS6550/2- between the fuel line from the fuel tank and the shut-off valve -B- on the -VAS6550- .

– Connect the -VAS6550/1- between the fuel line leading to the engine -1- and the shut-off valve -A- on the -VAS6550- .

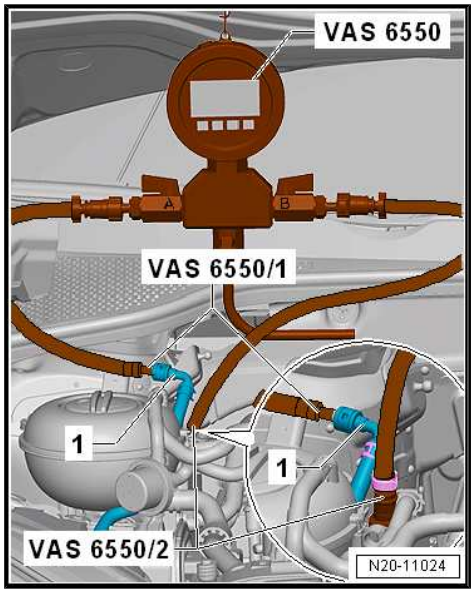

Test Sequence:

– Connect the Vehicle Diagnostic Tester .

– Select the fuel pump output diagnostic test mode in OBD.

Note

♦ *The fuel pump is now activated to build up the fuel pressure.*

♦ *If the output diagnostic test mode is performed several times in succession, it may be necessary to briefly start the motor before repeating the output diagnostic test mode.*

– Read the fuel pressure on the pressure gauge.

• Specified value: greater than or equal to 4.0 bar

– End the OBD and turn off the ignition.

– Observe the decrease in pressure on the pressure gauge. The pressure must not drop below 3.0 bar after 10 minutes.

If the pressure drops:

– Check all of the fuel lines for leaks and damage.

Protected by copyright. Copying for private or commercial purposes, in part or in whole, is not permitted unless authorised by Volkswagen AG. Volkswagen AG does not guarantee or accept any liability with respect to the correctness of information in this document. Copyright by Volkswagen AG.

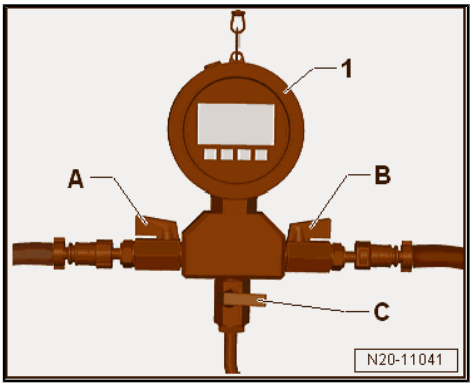

If no faults can be found:

- Make sure that the drain valve -C- on the Pressure Tester -1- is closed.
- The shut-off valves -A and B- on the Pressure Tester Kit -1- are opened.
- Activate the fuel pump using the output diagnostic test mode to build the fuel pressure.
- Close the shut-off valve -A- on the pressure gauge immediately after the pressure has been reached. The lever is perpendicular to the flow direction.

If the Pressure Drops Again (Leak on fuel tank side):

Proceed as follows to check residual pressure on the fuel delivery unit. Refer to ⇒ page 97 .

If the Pressure no Longer Decreases (Leak on the Engine Side):

Note

Check for the leak on the engine-side. Repeat the residual pressure check. Close the shut-off valve -B- this time to determine if there actually is a leak on the engine side.

- If there is a leak on the engine-side, check the fuel pipes and high pressure pump for leaks.

If no malfunction is found, check the fuel injectors for leaks:

- Remove the spark plugs.
- Open the shut-off valve -A- and -B-. Activate the fuel pump with the output diagnostic test mode.
- Check through the spark plug hole if fuel is collecting on the piston crown due to a leaking fuel injector.

Residual Pressure in Fuel Delivery Unit, Checking:

Golf Sportsvan:

- Remove the right rear seat. Refer to ⇒ Body Interior; Rep. Gr. 72 ; Rear Seats; Bench Seat / Single Seat, Removing and Installing .
- Partially loosen the cover -1- in the carpet at the separating line -arrow-.
- Do not separate the cover completely from the carpet so that later it will be installed correctly.
- Only loosen so far that the cover can be folded up.
- Fold up the cover in the direction of the -arrow-.

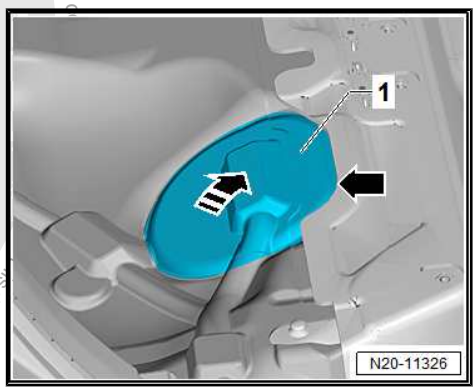

Golf and Golf Wagon:

- Remove the rear bench seat. Refer to ⇒ Body Interior; Rep. Gr. 72 ; Rear Seats; Bench Seat / Single Seats, Removing and Installing .

Protected by copyright. Copyright by Volkswagen AG.

Continuation for All Vehicles:

– Unclip the sealing flange cover -1- at the tabs -arrows- using the -3409- .

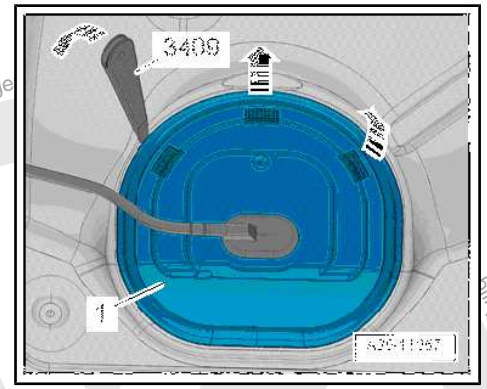

– Unclip the grommet -1- downward out of the cover -2-.

– Guide the cover -2- on the wiring harness -3- toward the rear.

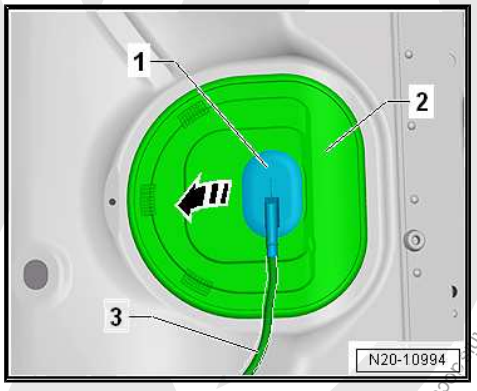

– Lift the tab -2- in the direction of the -arrow A- by using a finger to reach between the floor panel and the fuel tank.

– At the same time, pull the Fuel Pump Control Module -1- on the wiring harness -3- in the -direction of the arrow B- carefully out of the mount.

– Remove the Fuel Pump Control Module - J538- toward the inside between the fuel tank and the floor panel.

– Move the Fuel Pump Control Module - J538- to the side with the connector connected.

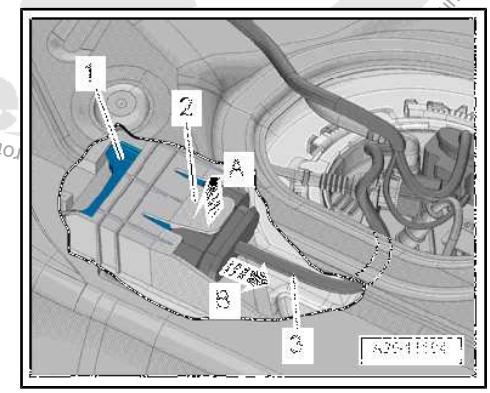

– Pull the fuel line -1- off the flange. Disconnect the connector couplings. Refer to
⇒ “4.1 Connector Couplings, Disconnecting”, page 62 .

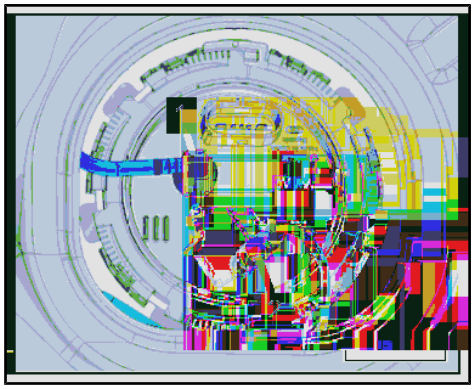

WARNING

The fuel line is under pressure.

Fuel poses a risk of injury to the eyes and skin.

Wear protective eyewear and protective clothing to avoid injury and contact with skin. Place a cleaning cloth around the connection point before loosening hose connections. Carefully open the connection point to release the pressure.

Protected by copyright. Copying for private or commercial purposes, in part or in whole, is not permitted unless authorised by Volkswagen AG. No liability with respect to the correctness of information in this document.

– Connect the -VAS6550- to the fuel delivery unit -1- using the -VAS6550/3-4- .
– Connect the -VAS6550/3-3- between the -VAS6550- and the fuel line -2-.
– Pull on the connector couplings to check them for secure fit.

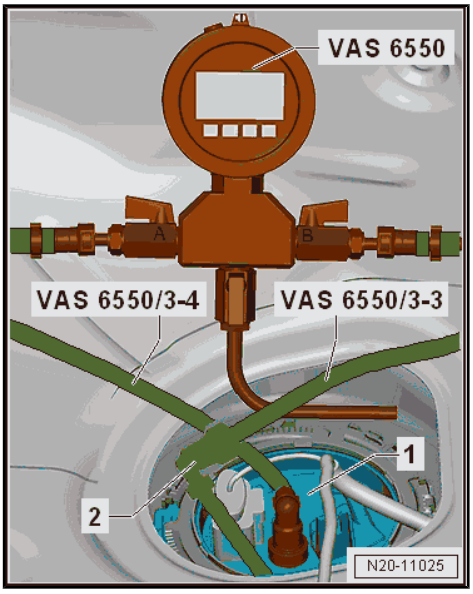

– Make sure that the drain valve -C- on the Pressure Tester -1- is closed.
– The shut-off valves -A and B- and -B- on the Pressure Tester Kit -1- are opened.
– Activate the fuel pump using the output diagnostic test mode to build the fuel pressure.
– Close the shut-off valve -B- on the pressure gauge immediately after the pressure has been reached. The lever is perpendicular to the flow direction.
– Repeat the residual pressure check. Refer to ⇒ page 96 .

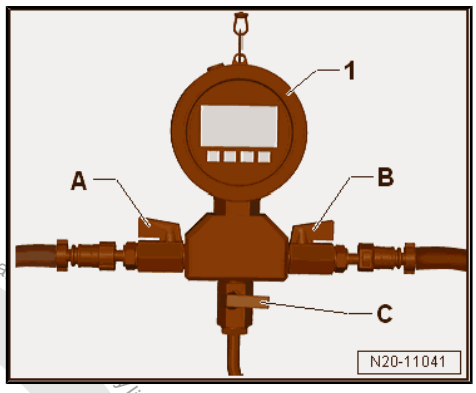

If the Pressure no Longer Decreases:

– Check the fuel line for leaks.

If the Pressure Drops Again:

– Open the fuel delivery unit -1-. Refer to ⇒ “2.2 Fuel Delivery Unit/Fuel Level Sensor, Removing and Installing”, page 52 .
– Make sure all hose connections -arrows- are connected.
– Check the fuel lines for leaks and damage.

If no Error Can Be Found:

– If the pressure retaining valve in the fuel delivery unit is faulty, replace the fuel delivery unit. Refer to ⇒ “2.2 Fuel Delivery Unit/Fuel Level Sensor, Removing and Installing”, page 52 .

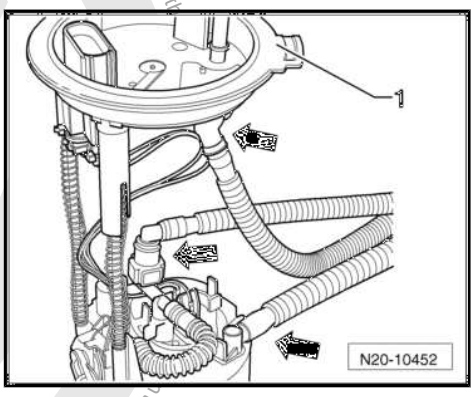

8.1.6 Residual Pressure, Checking, Vehicles with Engine Code CWVA

Special tools and workshop equipment required

Protected by copyright. Copyright by Volkswagen AG.

♦ Trim Removal Wedge - 3409-

♦ Pressure Tester Kit - VAS6550-

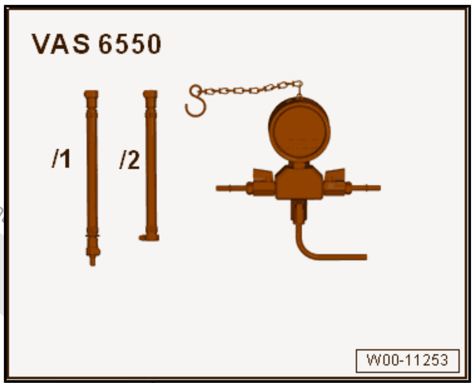

♦ Pressure Tester Kit - Adapter Set - Hose 3 - VAS6550/3-3-

♦ Pressure Tester Kit - Adapter Set - Hose 4 - VAS6550/3-4-

♦ Vehicle Diagnostic Tester

– Pay attention to all safety precautions. Refer to ⇒ “1 Safety Precautions”, page 1 .

– Follow the guidelines for clean working conditions. Refer to ⇒ “3.1 Parking/Auxiliary Heater and Fuel System Clean Working Conditions”, page 4 .

• Fuel pressure is OK and the Pressure Tester Kit - VAS6550- is connected. Check the fuel pressure. Refer to ⇒ “8.1.3 Fuel Pressure, Checking”, page 87 .

– Connect the Pressure Tester Kit - Hose 2 - VAS6550/2- between the fuel line from the fuel tank and the shut-off valve -B- on the Pressure Tester Kit - VAS6550- .

– Connect the Pressure Tester Kit - Hose 1 - VAS6550/1- between the fuel line leading to the engine -1- and the shut-off valve -A- on the Pressure Tester Kit - VAS6550- .

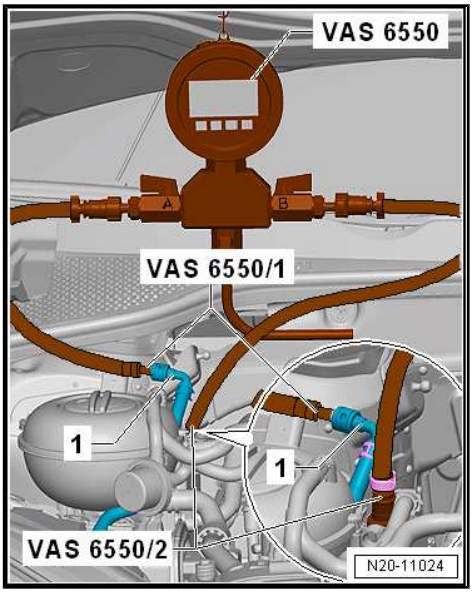

Test sequence:

– Connect the Vehicle Diagnostic Tester .

– Select the fuel pump output diagnostic test mode in OBD.

Note

♦ *The fuel pump is now activated to build up the fuel pressure.*

♦ *If the output diagnostic test mode is performed several times in succession, it may be necessary to briefly start the motor before repeating the output diagnostic test mode.*

– Read the fuel pressure on the pressure gauge.

• Specified value: greater than or equal to 4.0 bar

– End the OBD and turn off the ignition.

– Observe the decrease in pressure on the pressure gauge. After 10 minutes the pressure must not drop more than approximately 1 bar.

If the pressure drops:

– Check all of the fuel lines for leaks and damage.

Protected by copyright. Copying for private or commercial purposes, in part or in whole, is not permitted unless authorised by Volkswagen AG. Volkswagen AG does not guarantee or accept any liability with respect to the correctness of information in this document. Copyright by Volkswagen AG.

If no faults can be found:

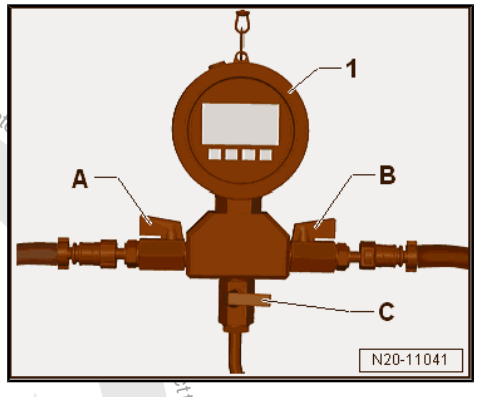

- Make sure that the drain valve -C- on the Pressure Tester -1- is closed.
- The shut-off valves -A- and -B- on the Pressure Tester Kit -1- are opened.
- Activate the fuel pump using the output diagnostic test mode to build the fuel pressure.
- Close the shut-off valve -A- on the pressure gauge immediately after the pressure has been reached. The lever is perpendicular to the flow direction.

If the pressure drops again (Leak on fuel tank side):

Proceed as follows to check residual pressure on the fuel delivery unit. Refer to ⇒ page 102 .

If the pressure now stops decreasing (leak on the engine side):

Note

Check for the leak on the engine-side. Repeat the residual pressure check. Close the shut-off valve -B- this time to determine if there actually is a leak on the engine side.

If there is a leak on the engine side:

- Check the fuel lines externally for leaks.
- Check the fuel rail and the fuel injectors externally for leaks. Refer to ⇒ Rep. Gr. 24 ; Fuel Injectors; Overview - Fuel Rail with Fuel Injectors .

If no error can be found:

- Check the fuel injectors for leaks. Refer to ⇒ Rep. Gr. 24 ; Fuel Injector; Fuel Injectors, Checking .

Residual Pressure in Fuel Delivery Unit, Checking:

Golf Sportsvan:

- Remove the right rear seat. Refer to ⇒ Body Interior; Rep. Gr. 72 ; Rear Seats; Bench Seat / Single Seat, Removing and Installing .

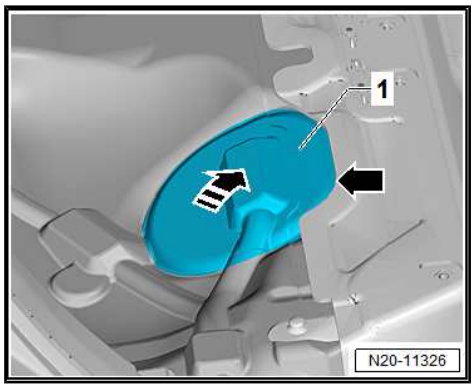

- Partially loosen the cover -1- in the carpet at the separating line -arrow-.
- Do not separate the cover completely from the carpet so that later it will be installed correctly.
- Only loosen so far that the cover can be folded up.
- Fold up the cover in the -direction of the arrow-.

Golf and Golf wagon:

- Remove the rear bench seat. Refer to ⇒ Body Interior; Rep. Gr. 72 ; Rear Seats; Bench Seat / Single Seats, Removing and Installing .

Protected by copyright. Copyright by Volkswagen AG. Volkswagen AG does not guarantee the correctness of information in this document. Copying for private or commercial purposes, in part or in whole, is not permitted unless authorised by Volkswagen AG.

Protected by copyright. Copying for private or commercial purposes, in part or in whole, is not permitted unless authorized by Volkswagen AG. Volkswagen AG does not guarantee or accep... ...ment. Copyright by Volkswagen AG.

Continuation for All Vehicles:

– Unclip the sealing flange cover -1- at the tabs -arrows- using the Trim Removal Wedge - 3409- .

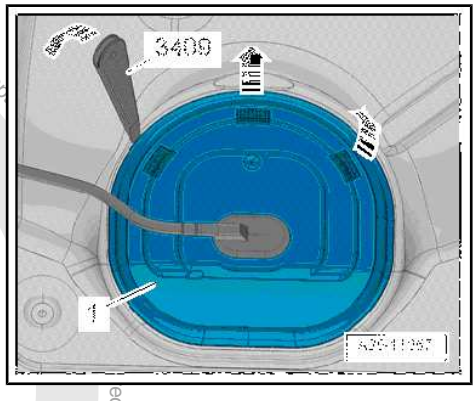

– Unclip the grommet -1- downward out of the cover -2-.

– Guide the cover -2- on the wiring harness -3- toward the rear.

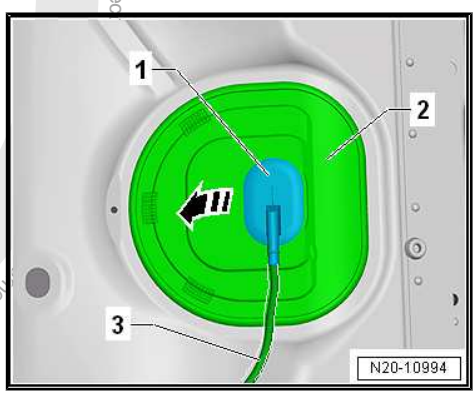

– Pull the fuel line -1- off the flange. Disconnect the connector couplings. Refer to
⇒ “4.1 Connector Couplings, Disconnecting”, page 62 .

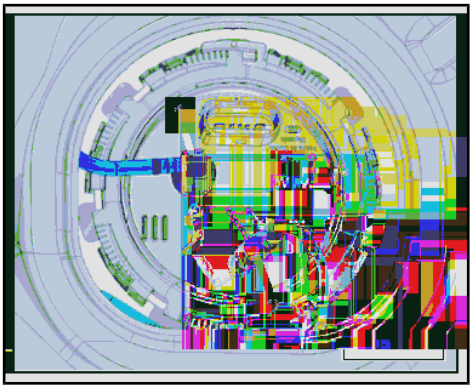

> **WARNING**
>
> ***The fuel line is under pressure.***
>
> ***Fuel poses a risk of injury to the eyes and skin.***
>
> ***Wear protective eyewear and protective clothing to avoid injury and contact with skin. Place a cleaning cloth around the connection point before loosening hose connections. Carefully open the connection point to release the pressure.***

– Connect the Pressure Tester Kit - VAS6550- to the fuel delivery unit -1- using the Pressure Tester Kit - Adapter Set - Hose 4 - VAS6550/3-4- .

– Connect the Pressure Tester Kit - Adapter Set - Hose 3 - VAS6550/3-3- between the Pressure Tester Kit - VAS6550- and the fuel line -2-.

– Pull on the connector couplings to check them for secure fit.

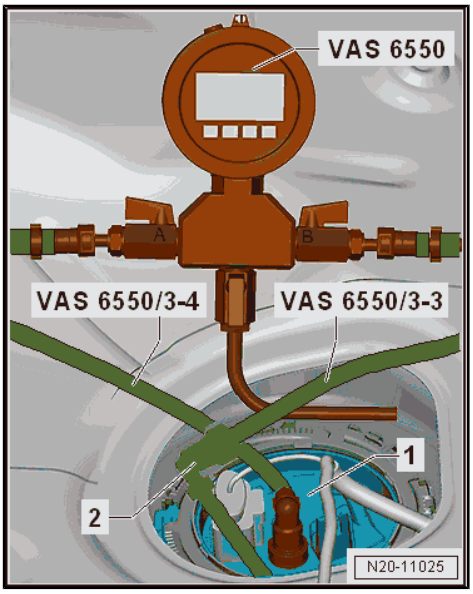

– Make sure that the drain valve -C- on the Pressure Tester -1- is closed.
– The shut-off valves -A- and -B- on the Pressure Tester Kit -1- are opened.
– Activate the fuel pump using the output diagnostic test mode to build the fuel pressure.
– Close the shut-off valve -B- on the pressure gauge immediately after the pressure has been reached. The lever is perpendicular to the flow direction.
– Repeat the residual pressure check. Refer to ⇒ page 101 .

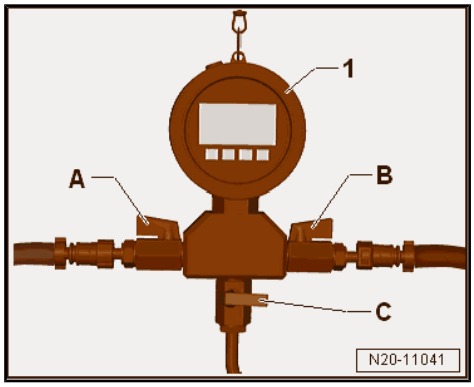

If the pressure no longer decreases:

– Check the fuel line for leaks.

If the pressure drops again:

– Open the fuel delivery unit -1-. Refer to ⇒ “2.2 Fuel Delivery Unit/Fuel Level Sensor, Removing and Installing”, page 52 .
– Make sure all hose connections -arrows- are connected.
– Check the fuel lines for leaks and damage.

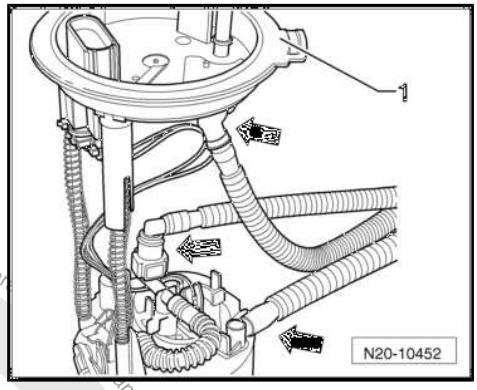

If no error can be found:

– If the pressure retaining valve in the fuel delivery unit is faulty, replace the fuel delivery unit. Refer to ⇒ “2.2 Fuel Delivery Unit/Fuel Level Sensor, Removing and Installing”, page 52 .

8.1.7 Fuel Delivery Rate, Checking

Special tools and workshop equipment required

- Trim Removal Wedge - 3409-
- Pressure Tester Kit - VAS6550-
- Pressure Tester Kit - Adapter Set - Hose 3 - VAS6550/3-3-
- Pressure Tester Kit - Adapter Set - Hose 4 - VAS6550/3-4-
- Pressure Regulator Valve - VAS6550/4-
- Connector Test Set - VAG1594D-
- Multimeter, for example Analog/Digital Multimeter - FLU83III-
- Injection Rate Comparison Meter Kit - Remote Cable - VAG1348/3A-
- Vehicle Diagnostic Tester - Test Adapter - 5 Pin - VAS5565-
- Vehicle Diagnostic Tester
- Measuring container, greater than three liters

Protected by copyright. Copyright by Volkswagen AG. Copyright by Volkswagen AG. Volkswagen AG does not guarantee or assume any liability with respect to the correctness of information in this document. Copying for private or commercial purposes, in part or in whole, is not permitted unless authorised by Volkswagen AG.

Perform the following work:

Checking the Fuel Delivery Rate Inside the Engine Compartment, Quick Test:

Note

The fuel delivery rate is first checked in the engine compartment with the "Check fuel delivery rate, quick test" Guided Function. Perform a second measurement on the fuel delivery unit flange if the minimum delivery rate is not attained.

- Connect the Vehicle Diagnostic Tester .
- Start Guided Functions.
- Check the fuel delivery rate function and select the quick test.
- Follow the instructions displayed on the Vehicle Diagnostic Tester .

Protected by copyright. Copying for private or commercial purposes, in part or in whole, is not permitted unless authorised by Volkswagen AG. Volkswagen AG does not guarantee or accept any liability with respect to the correctness of information in this document. Copyright by Volkswagen AG.

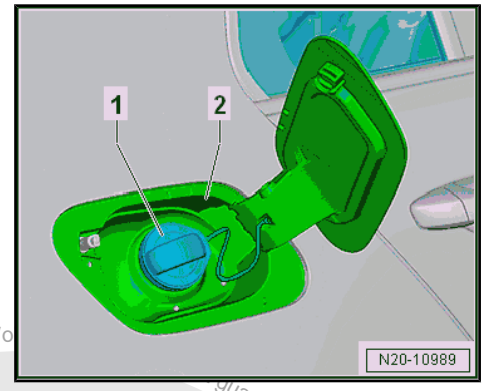

If the Specified Value is not Obtained:

– Open the fuel filler door unit -2-.

– Clean the area around the fuel filler neck.

– Remove the cap -1- for the fuel filler neck.

– Repeat checking the fuel delivery rate, quick test. Refer to ⇒ page 105 .

If the Specified Value is Obtained:

– Check the fuel tank ventilation. Refer to ⇒ “6.4.1 Fuel Tank, Checking Ventilation, with Fuel Tank Leak Detection”, page 72 .

If the Specified value is not Obtained:

– Check the fuel lines for possible restrictions (kinks) or blockages.

– Check the fuel lines for leaks and damage.

If no Error Can Be Found:

Check the fuel delivery rate on the fuel delivery unit as follows:

Fuel Delivery Rate, Checking on Fuel Delivery Unit:

Note

♦ *Disconnect the connector couplings. Refer to* *⇒ “4.1 Connector Couplings, Disconnecting”, page 62* .

♦ *If driving is still impaired with the fuel tank 1/4 full, then perform a fuel delivery test with the fuel tank only 1/4 full or with very little fuel in the fuel tank.*

• Voltage supply OK. Refer to ⇒ “8.1.1 Fuel Pumps, Checking Function and Power Supply”, page 81 .

• Fuel pressure is OK. Refer to ⇒ “8.1.3 Fuel Pressure, Checking”, page 87 .

• The battery voltage must be minimum 11.5 V. Charge the battery if necessary. Refer to ⇒ Electrical Equipment; Rep. Gr. 27 ; Battery; Battery, Charging .

• Fuel Pump Control Module - J538- is OK use the Vehicle Diagnostic Tester ⇒ Vehicle diagnostic tester.

– Pay attention to all safety precautions. Refer to ⇒ “1 Safety Precautions”, page 1 .

– Follow the guidelines for clean working conditions. Refer to ⇒ “3.1 Parking/Auxiliary Heater and Fuel System Clean Working Conditions”, page 4 .

– Connect the battery charger. Refer to ⇒ Electrical Equipment; Rep. Gr. 27 ; Battery; Battery, Charging .

Golf Sportsvan:

– Remove the right rear seat. Refer to ⇒ Body Interior; Rep. Gr. 72 ; Rear Seats; Bench Seat / Single Seat, Removing and Installing .

Copyright by Volkswagen AG. Vo... guarantee or accept any liability with respect to the correctness of information in this document. Copyright by Volkswagen AG. Proprietary copyright. Copying for private or commercial purposes, in part or in whole is not permitted unless authorised by Volkswagen AG.

– Partially loosen the cover -1- in the carpet at the separating line -arrow-.
– Do not separate the cover completely from the carpet so that later it will be installed correctly.
– Only loosen so far that the cover can be folded up.
– Fold up the cover in the direction of the -arrow-.

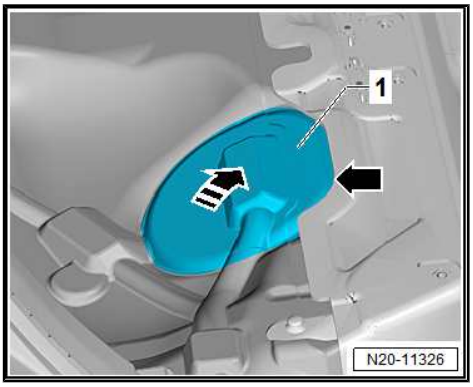

Golf and Golf Wagon:

– Remove the rear bench seat. Refer to ⇒ Body Interior; Rep. Gr. 72 ; Rear Seats; Bench Seat / Single Seats, Removing and Installing .

Continuation for All Vehicles:

– Unclip the sealing flange cover -1- at the tabs -arrows- using the -3409- .

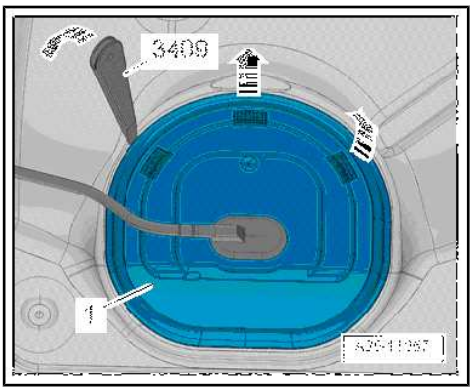

– Unclip the grommet -1- downward out of the cover -2-.
– Guide the cover -2- on the wiring harness -3- toward the rear.

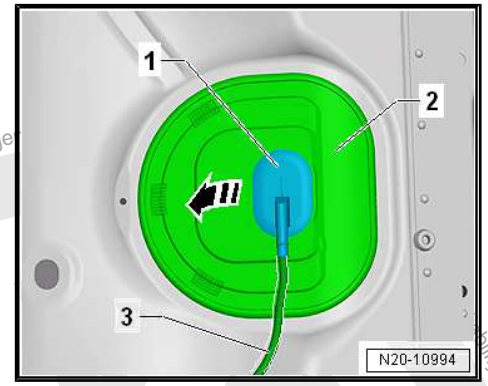

– Lift the tab -2- in the direction of the -arrow A- by using a finger to reach between the floor panel and the fuel tank.
– At the same time, pull the Fuel Pump Control Module -1- on the wiring harness -3- in direction of the -arrow B- carefully out of the mount.
– Remove the Fuel Pump Control Module - J538- toward the inside between the fuel tank and the floor panel.
– Move the Fuel Pump Control Module - J538- to the side with the connector connected.

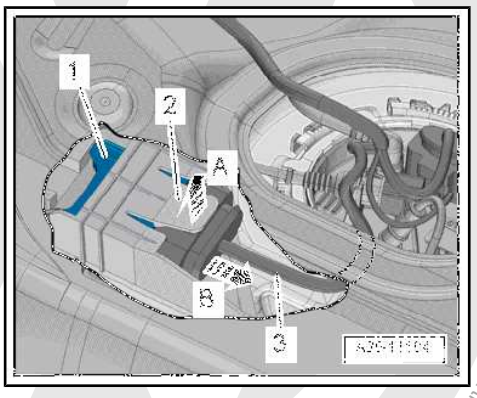

Protected by copyright. Copying for private or commercial purposes, in part or in whole is not permitted unless authorised by Volkswagen AG. Copyright by Volkswagen AG. No liability with respect to the correctness of information in this document.

– Pull on the connector -1- without pressing the release to make sure the connection is secure. If the connector was not connected correctly, it could cause a malfunction.

– Release and disconnect the connector -1-.

– Check the contacts on the connector and on the fuel delivery unit for damage.

– Remove the connector -2- (if equipped) from the bracket.

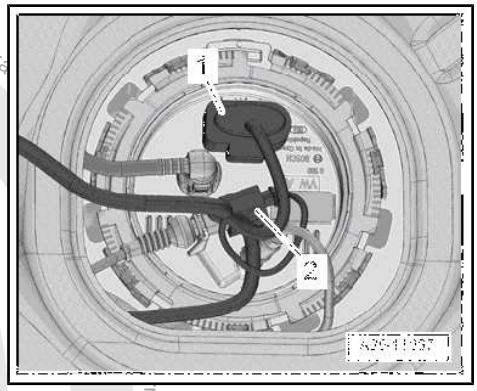

– Connect the -VAS5565- to the fuel delivery unit -1-.

– Connect the -VAG1348/3A- to the -VAS5565- and the battery positive terminal clamp in the engine compartment.

– Connect the connection -5- (yellow) on the -VAS5565- to the battery negative terminal using suitable service equipment-3-.

– To do so, use the -VAG1594D- also.

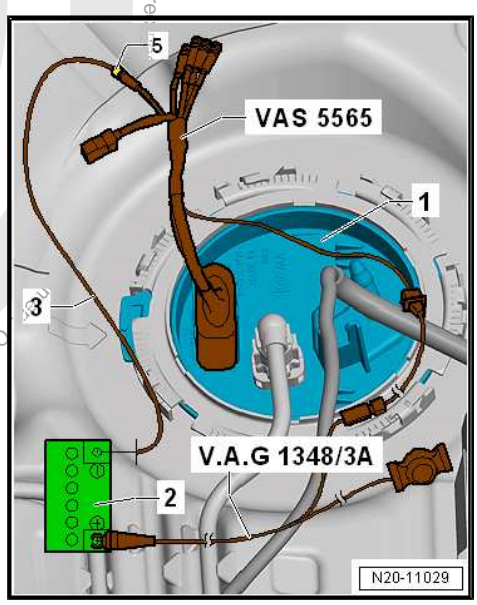

Note

This step allows the fuel pump to run when the engine is not running.

– Remove the fuel lines -1- from the flange. Disconnect the connector couplings. Refer to ⇒ “4.1 Connector Couplings, Disconnecting”, page 62 .

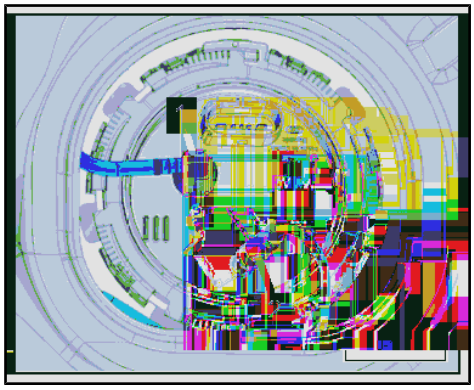

WARNING

The fuel line is under pressure.

Fuel poses a risk of injury to the eyes and skin.

Wear protective eyewear and protective clothing to avoid injury and contact with skin. Place a cleaning cloth around the connection point before loosening hose connections. Carefully open the connection point to release the pressure.

– The fuel pump delivery rate is dependent on the battery voltage. Connect the Multimeter to the connectors -1- and -5- of the -VAS5565- .

– Connect the Multimeter with the -VAG1594D- .

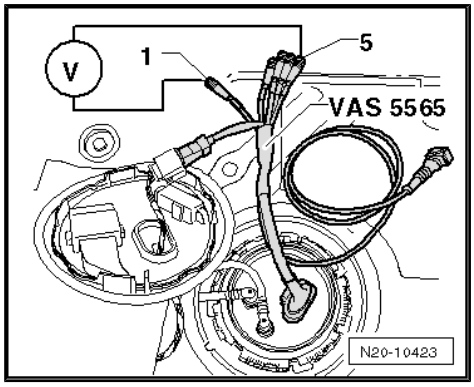

Protected by copyright. Copying for private or commercial purposes, in part or in whole, is not permitted unless authorised by Volkswagen AG. Volkswagen AG does

– Connect the -VAS6550- to the fuel delivery unit -1- using the -VAS6550/3-4- .
– Connect the -VAS6550/3-4- to the shut-off valve -A-.
– Connect the -VAS6550/4- to the connection -B- on the -VAS6550- .
– Hold the open end of the -VAS6550/4- hose in a measuring container.

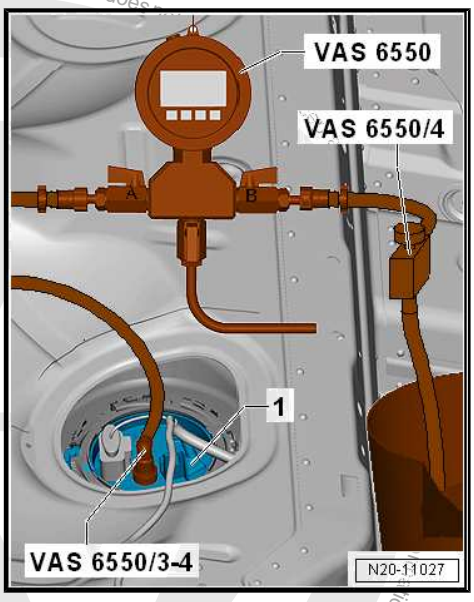

– Make sure that the drain valve -C- on the Pressure Tester -1- is closed.
– The shut-off valves -A and B- on the Pressure Tester Kit -1- are opened.
– Push the -VAG1348/3A- .

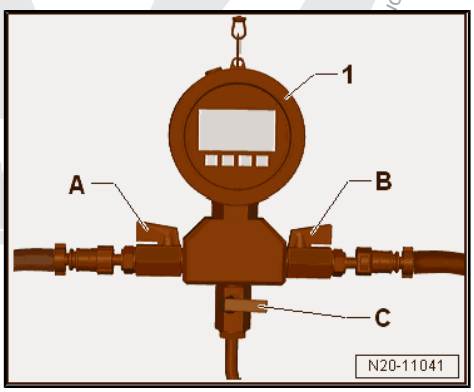

Note

The Transfer Fuel Pump - G6- is activated!

– Adjust the pressure to 4.0 bar with the adjustment wheel on the Pressure Regulating Valve -arrow-.
– From this point on do not move the adjustment wheel.
– Empty the measuring container.
– Press the remote control for 60 seconds while measuring the fuel pump voltage.

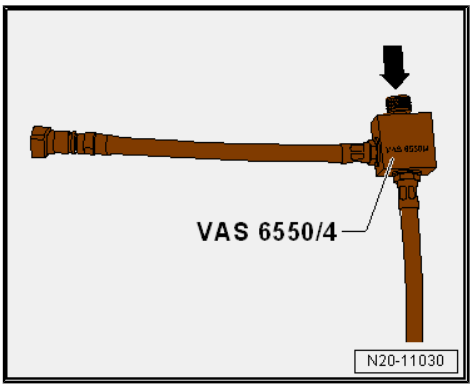

– Compare the delivered quantity of fuel with the specified value in the table.

Axis designation	Unit
Minimum delivery rate	cm^3
Fuel pump voltage when the engine is idling and the pump is running	Volt

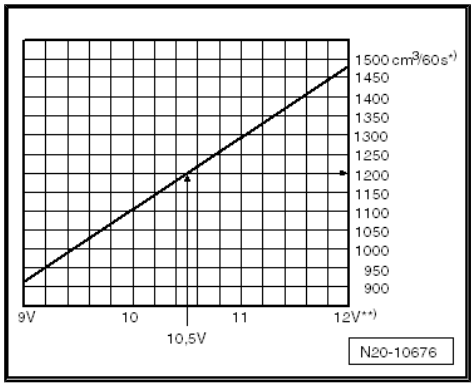

Example:

During test, a voltage of 10.5 Volts is measured. This results in a minimum delivery quantity of approximately 1200 cm^3/60 s.

If the Specified Value is Obtained:

– Check the fuel lines for possible restrictions (kinks) or blockages.

– Check the fuel lines for leaks and damage.

If the Specified Value is not Obtained:

– Remove the fuel delivery unit. Refer to ⇒ "2.2 Fuel Delivery Unit/Fuel Level Sensor, Removing and Installing", page 52 .

– Check the filter screen for contaminants.

– Check whether the hose connections -arrows- to the fuel delivery unit -1- are sealed.

– Check the fuel lines for possible restrictions (kinks) or blockages.

– Check the fuel lines for leaks and damage.

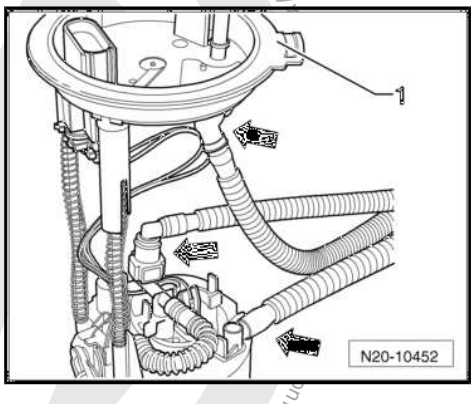

If no Malfunction was Detected:

– Replace the fuel delivery unit. Refer to ⇒ "2.2 Fuel Delivery Unit/Fuel Level Sensor, Removing and Installing", page 52 .

8.1.8 Fuel Delivery Rate, Checking, Vehicles with Engine Code CWVA

Special tools and workshop equipment required

- Trim Removal Wedge - 3409-
- Pressure Tester Kit - VAS6550-
- Pressure Tester Kit - Adapter Set - Hose 3 - VAS6550/3-3-
- Pressure Tester Kit - Adapter Set - Hose 4 - VAS6550/3-4-
- Pressure Regulator Valve - VAS6550/4-
- Connector Test Set - VAG1594D-
- Multimeter, for example Analog/Digital Multimeter - FLU83III-
- Injection Rate Comparison Meter Kit - Remote Cable - VAG1348/3A-
- Vehicle Diagnostic Tester - Test Adapter - 5 Pin - VAS5565-
- Vehicle Diagnostic Tester
- Measuring container, greater than three liters

Protected by copyright. Copying for private or commercial purposes, in part or in whole, is not permitted unless authorised by Volkswagen AG. Volkswagen AG does not guarantee or accept any liability in this document. Copyright by Volkswagen AG.

Perform the following work:

Fuel Delivery Rate, Checking in Engine Compartment, Quick Test:

Note

The fuel delivery rate is first checked in the engine compartment with the “Check fuel delivery rate, quick test” Guided Function. Perform a second measurement on the fuel delivery unit flange if the minimum delivery rate is not attained.

– Connect the Vehicle Diagnostic Tester .
– Start Guided Functions.
– Check the fuel delivery rate function and select the quick test.
– Follow the instructions displayed on the Vehicle Diagnostic Tester .

Protected by copyright. Copying for private or commercial purposes, in part or in whole, is not permitted unless authorised by Volkswagen AG. Volkswagen AG does not guarantee or accept any liability with respect to the correctness of information in this document. Copyright by Volkswagen AG.

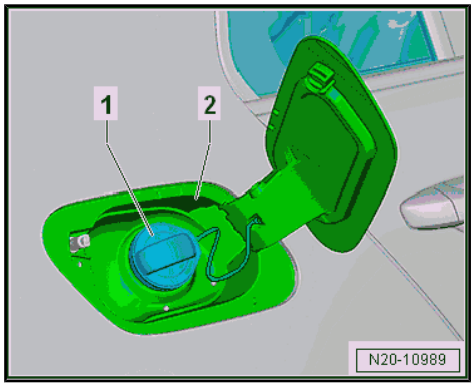

If the Specified Value is not Obtained:

– Open the fuel filler door unit -2-.

– Clean the area around the fuel filler neck.

– Remove the cap -1- for the fuel filler neck.

– Repeat checking the fuel delivery rate, quick test ⇒ page 105 .

If the Specified Value is Obtained:

– Check the fuel tank ventilation. Refer to ⇒ “6.4.1 Fuel Tank, Checking Ventilation, with Fuel Tank Leak Detection”, page 72 .

If the Specified Value is not Obtained:

– Check the fuel lines for possible restrictions (kinks) or blockages.

– Check the fuel lines for leaks and damage.

If no Error Can Be Found:

Check the fuel delivery rate on the fuel delivery unit as follows:

Fuel Delivery Rate, Checking on Fuel Delivery Unit:

Note

◆ *Disconnect the connector couplings. Refer to ⇒ “4.1 Connector Couplings, Disconnecting”, page 62 .*

◆ *If driving is still impaired with the fuel tank 1/4 full, then perform a fuel delivery test with the fuel tank only 1/4 full or with very little fuel in the fuel tank.*

• Voltage supply OK. Refer to ⇒ “8.1.1 Fuel Pumps, Checking Function and Power Supply”, page 81 .

• Fuel pressure is OK. Refer to ⇒ “8.1.3 Fuel Pressure, Checking”, page 87 .

• The battery voltage must be minimum 11.5 V. Charge the battery if necessary. Refer to ⇒ Electrical Equipment; Rep. Gr. 27 ; Battery; Battery, Charging .

• Fuel Pump Control Module - J538- is OK use the Vehicle Diagnostic Tester ⇒ Vehicle diagnostic tester.

– Pay attention to all safety precautions. Refer to ⇒ “1 Safety Precautions”, page 1 .

– Follow the guidelines for clean working conditions. Refer to ⇒ “3.1 Parking/Auxiliary Heater and Fuel System Clean Working Conditions”, page 4 .

– Connect the battery charger. Refer to ⇒ Electrical Equipment; Rep. Gr. 27 ; Battery; Battery, Charging .

Golf Sportsvan:

– Remove the right rear seat. Refer to ⇒ Body Interior; Rep. Gr. 72 ; Rear Seats; Bench Seat / Single Seat, Removing and Installing .

Protected by Copyright. Copying for private or commercial purposes, in part or whole, is not permitted unless authorised by Volkswagen AG. Volkswagen AG does not guarantee or accept any liability with respect to the correctness of information in this document. Copyright by Volkswagen AG.

– Partially loosen the cover -1- in the carpet at the separating line -arrow-.
– Do not separate the cover completely from the carpet so that later it will be installed correctly.
– Only loosen so far that the cover can be folded up.
– Fold up the cover in the direction of the -arrow-.

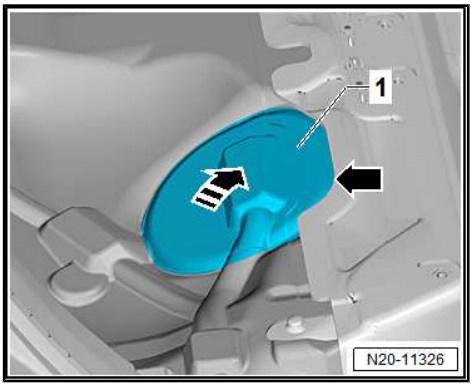

Golf and Golf Wagon:

– Remove the rear bench seat. Refer to ⇒ Body Interior; Rep. Gr. 72 ; Rear Seats; Bench Seat / Single Seats, Removing and Installing .

Continuation for All Vehicles:

– Unclip the sealing flange cover -1- at the tabs -arrows- using the -3409- .

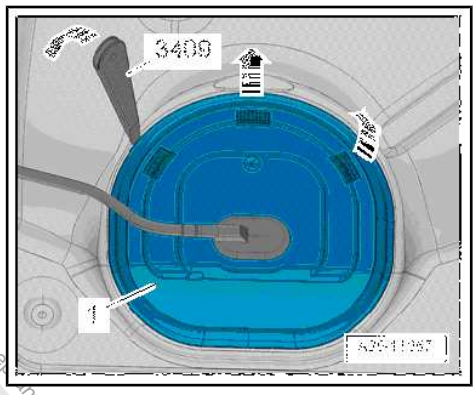

– Unclip the grommet -1- downward out of the cover -2-.
– Guide the cover -2- on the wiring harness -3- toward the rear.

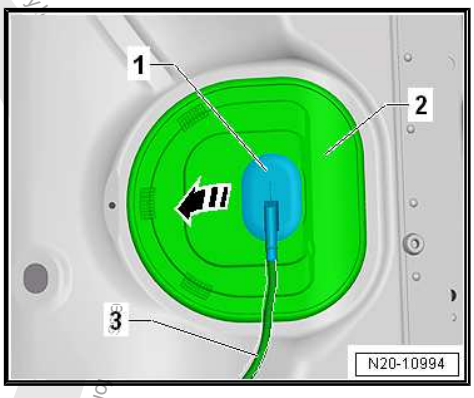

– Pull on the connector -1- without pressing the release to make sure the connection is secure. If the connector was not connected correctly, it could cause a malfunction.
– Release and disconnect the connector -1-.
– Check the contacts on the connector and on the fuel delivery unit for damage.

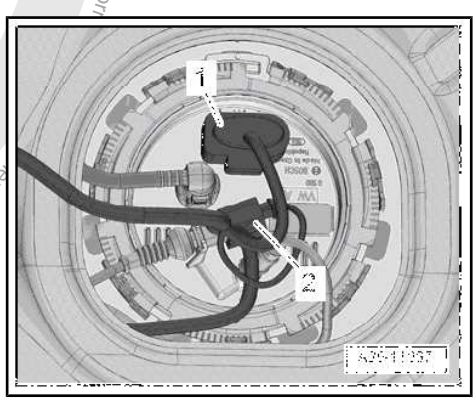

Protected by copyright. Copying for private or commercial purposes, in part or in whole, is not permitted unless authorised by Volkswagen AG. Volkswagen AG does not guarantee or accept any liability with respect to the correctness of information. Copyright by Volkswagen AG.

– Attach the -VAS5565- to the connector and to the fuel delivery unit.

– Connect the -VAG1348/3A- to the -VAS5565- and the battery positive terminal clamp in the engine compartment.

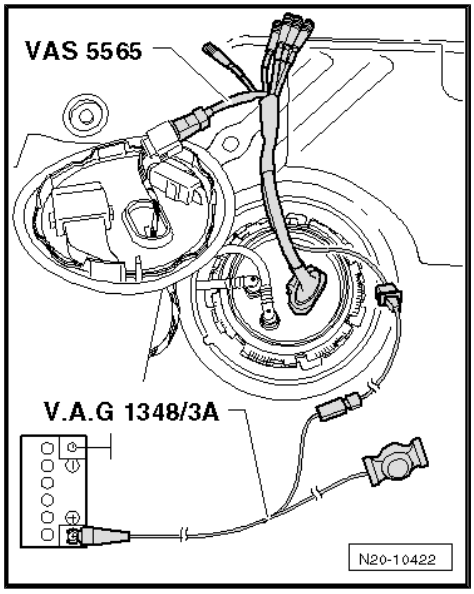

Note

This step allows the fuel pump to run when the engine is not running.

– The fuel pump delivery rate is dependent on the battery voltage. Also connect the Multimeter to the wires -1- and -5- in the -VAS5565- .

– To do so, use the -VAG1594D- also.

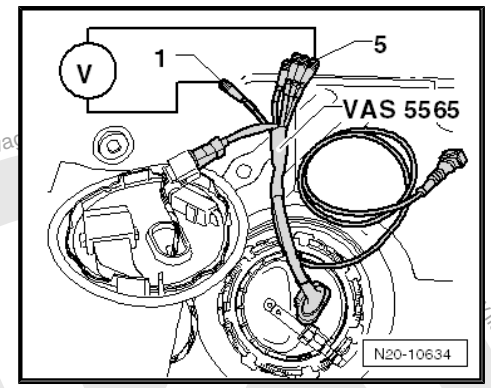

– Remove the fuel lines -1- from the flange. Disconnect the connector couplings. Refer to
⇒ “4.1 Connector Couplings, Disconnecting”, page 62 .

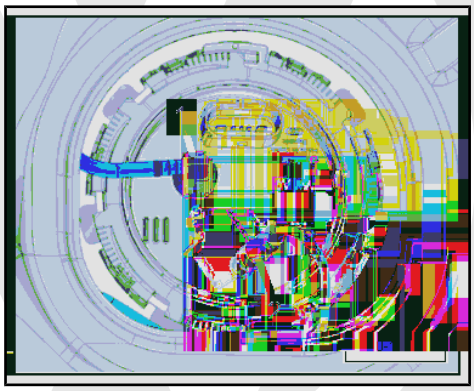

WARNING

The fuel line is under pressure.

Fuel poses a risk of injury to the eyes and skin.

Wear protective eyewear and protective clothing to avoid injury and contact with skin. Place a cleaning cloth around the connection point before loosening hose connections. Carefully open the connection point to release the pressure.

Protected by copyright. Copying for private or commercial purposes, in part or whole, is not permitted unless authorised by Volkswagen AG. Copyright by Volkswagen AG. No liability with respect to the correctness of information in this document.

– Connect the -VAS6550- to the fuel delivery unit -1- using the -VAS6550/3-4- .
– Connect the -VAS6550/3-4- to the shut-off valve -A-.
– Connect the -VAS6550/4- to the connection -B- on the -VAS6550- .
– Hold the open end of the -VAS6550/4- hose in a measuring container.

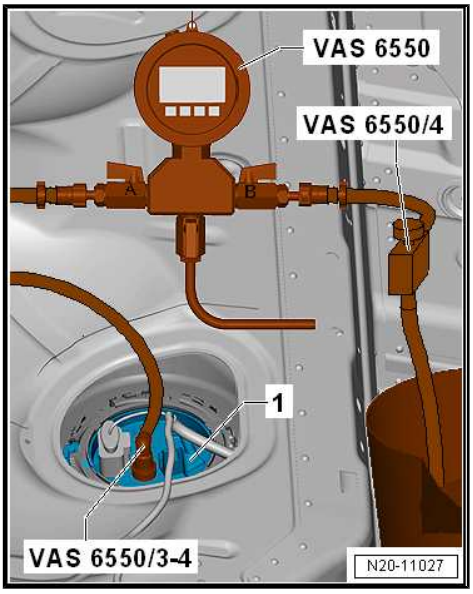

– Make sure that the drain valve -C- on the Pressure Tester -1- is closed.
– The shut-off valves -A and B- on the Pressure Tester Kit -1- are opened.
– Push the -VAG1348/3A- .

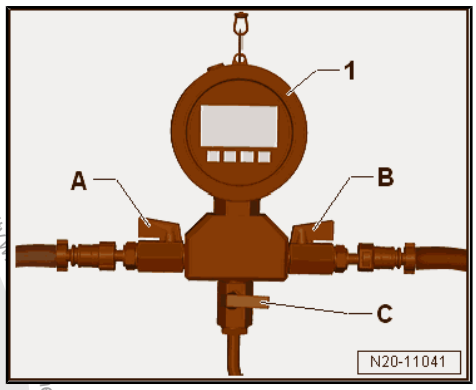

Note

The Transfer Fuel Pump - G6- is activated!

– Adjust the pressure to 4.0 bar with the adjustment wheel on the Pressure Regulating Valve -arrow-.
– From this point on do not move the adjustment wheel.
– Empty the measuring container.
– Press the remote control for 60 seconds while measuring the fuel pump voltage.

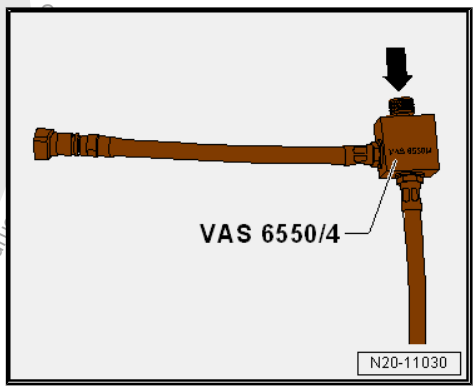

Protected by copyright. Copyright for private or commercial purposes, in part or in whole, is not permitted unless authorised by Volkswagen AG. Volkswagen AG does not guarantee or accept any liability with respect to the correctness of information in this document. Copyright by Volkswagen AG.

– Compare the delivered quantity of fuel with the specified value in the table.

Axis designation	Unit
Minimum delivery rate	cm^3
Fuel pump voltage when the engine is idling and the pump is running	Volt

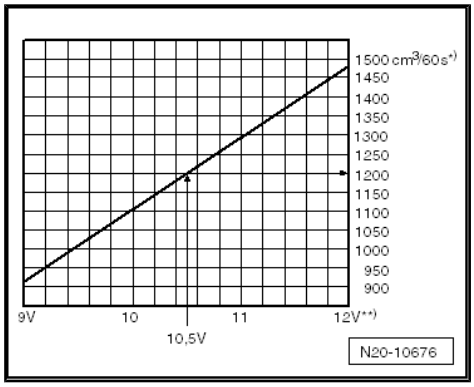

Example:

During test, a voltage of 10.5 Volts is measured. This results in a minimum delivery quantity of approximately 1200 cm^3/60 s.

If the Specified Value is Obtained:

– Check the fuel lines for possible restrictions (kinks) or blockages.

– Check the fuel lines for leaks and damage.

If the Specified Value is not Obtained:

– Remove the fuel delivery unit. Refer to ⇒ "2.2 Fuel Delivery Unit/Fuel Level Sensor, Removing and Installing", page 52 .

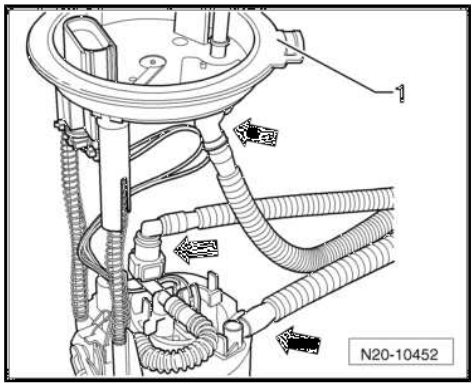

– Check the filter screen for contaminants.

– Check whether the hose connections -arrows- to the fuel delivery unit -1- are sealed.

– Check the fuel lines for possible restrictions (kinks) or blockages.

– Check the fuel lines for leaks and damage.

If no Malfunction was Detected:

– Replace the fuel delivery unit. Refer to ⇒ "2.2 Fuel Delivery Unit/Fuel Level Sensor, Removing and Installing", page 52 .

8.2 Fuel Pump Control Module - J538- , Removing and Installing

Special tools and workshop equipment required

♦ Trim Removal Wedge - 3409-

Procedure:

Removing

– Move the front seats all the way forward.

– Switch off the ignition.

Golf Sportsvan:

– Remove the right rear seat. Refer to ⇒ Body Interior; Rep. Gr. 72 ; Rear Seats; Bench Seat / Single Seat, Removing and Installing .

Protected by copyright. Copyright for private or commercial purposes, in part or in whole, is not permitted unless authorised by Volkswagen AG. Volkswagen AG does not guarantee or accept any liability with respect to the correctness of information in this document. Copyright by Volkswagen AG.

– Partially loosen the cover -1- in the carpet at the separating line -arrow-.
– Do not separate the cover completely from the carpet so that later it will be installed correctly.
– Only loosen so far that the cover can be folded up.
– Fold up the cover in the direction of the -arrow-.

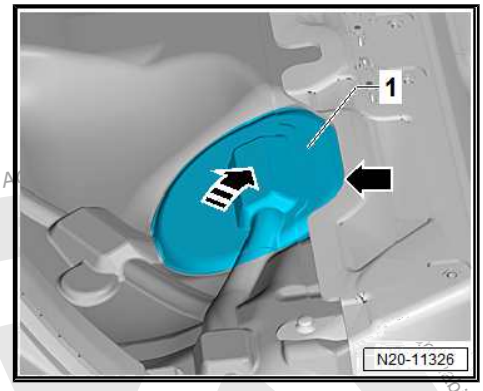

Golf and Golf Wagon:

– Remove the rear bench seat. Refer to ⇒ Body Interior; Rep. Gr. 72 ; Rear Seats; Bench Seat / Single Seats, Removing and Installing .

Continuation for All Vehicles:

– Unclip the sealing flange cover -1- at the tabs -arrows- using the -3409- .

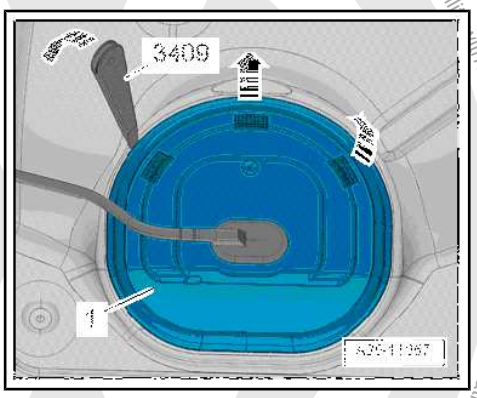

– Unclip the grommet -1- downward out of the cover -2-.
– Guide the cover -2- on the wiring harness -3- toward the rear.

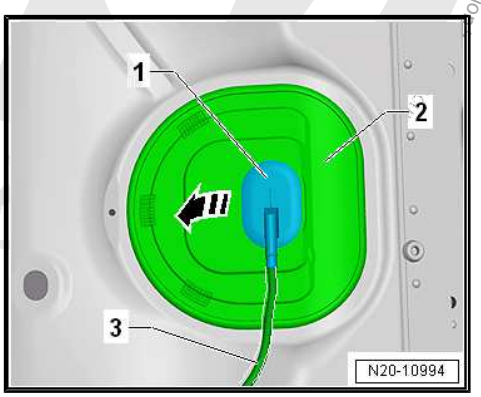

Protected by copyright. Copying for private or commercial purposes, in part or in whole is not permitted unless authorised by Volkswagen AG. There is no guarantee with respect to the correctness of information.

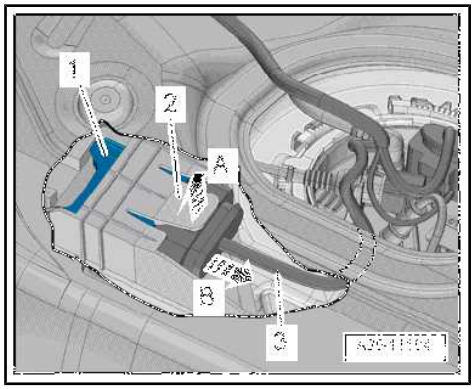

– Lift the tab -2- -arrow A- so that it is possible to reach between the floor panel and the fuel tank.
– At the same time, pull the Fuel Pump Control Module -1- carefully at the wiring harness -3- out of the mount -arrow B-.
– Remove the Fuel Pump Control Module - J538- toward the inside between the fuel tank and the floor panel.
– Disconnect the connector and remove the Fuel Pump Control Module - J538- .

Installing

Install in reverse order of removal. Note the following.

Component location. Refer to
⇒ “1.1 Overview - Fuel Tank”, page 6 .

– Connect the wiring harness to the Fuel Pump Control Module - J538- .
– Pull on the connector to make sure it is secure.
– Insert the Fuel Pump Control Module - J538- into the mount on the fuel tank and press on it until it clicks into place.
– Pull on the Fuel Pump Control Module - J538- to make sure it is secure.

Protected by copyright. Copying for private or commercial purposes, in part or in whole, is not permitted unless authorised by Volkswagen AG. Volkswagen AG does not guarantee or accept any liability with respect to the correctness of information in this document. Copyright by Volkswagen AG.

9 Sensors

⇒ “9.1 Fuel Tank Pressure Sensor G400 , Removing and Installing”, page 119

⇒ “9.2 Fuel Tank Leak Detection Control Module J909 , Removing and Installing”, page 120

9.1 Fuel Tank Pressure Sensor - G400- , Removing and Installing

Removing

Note

The Fuel Tank Pressure Sensor - G400- is located in the pressure regulating valve on the EVAP canister. Refer to ⇒ “6.2.2 Overview - EVAP System, without Fuel Tank Leak Detection”, page 70 .

– Remove the EVAP canister. Refer to ⇒ “6.3.2 EVAP Canister, Removing and Installing, without Fuel Tank Leak Detection”, page 71 .

– Remove the hose -1- to the EVAP canister -2-.

– To do this, loosen the clamps -arrows-.

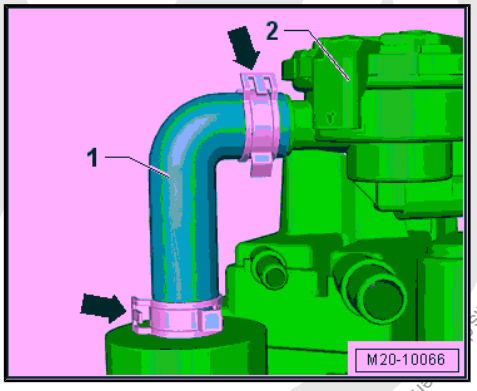

– Remove the bolts -arrows- for the pressure regulating valve -1- on the EVAP canister -2-.

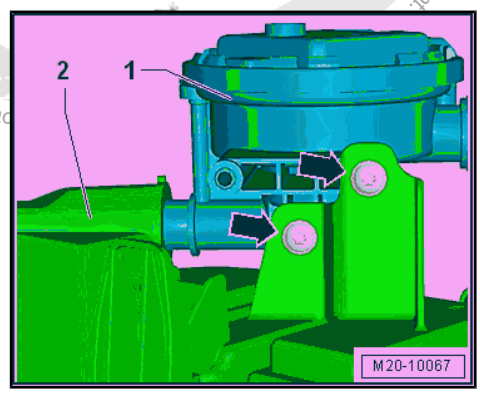

Protected by copyright. Copying for private or commercial purposes, in part or in whole, is not permitted unless authorised by Volkswagen AG. Volkswagen AG does not guarantee or accept any liability with respect to the correctness of information in this

– Remove the pressure regulating valve -1- from the seal -3- on the EVAP canister -2- in the -direction of the arrow-.

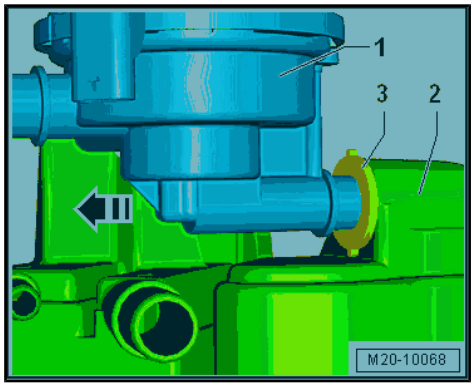

Installing

Install in reverse order of removal. Note the following:

– Pay attention that the seal -3- is seated correctly.

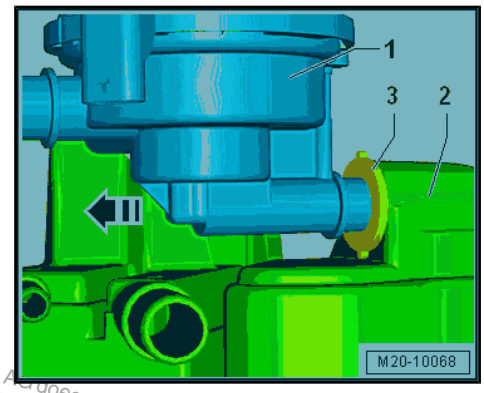

Tightening Specification

♦ Refer to
⇒ “6.2.2 Overview - EVAP System, without Fuel Tank Leak Detection”, page 70

9.2 Fuel Tank Leak Detection Control Module - J909- , Removing and Installing

Removing

Component location ⇒ Item 17 (page 11) :

– Release and remove the connector -arrow- on the Fuel Tank Leak Detection Control Module - J909- -1-.

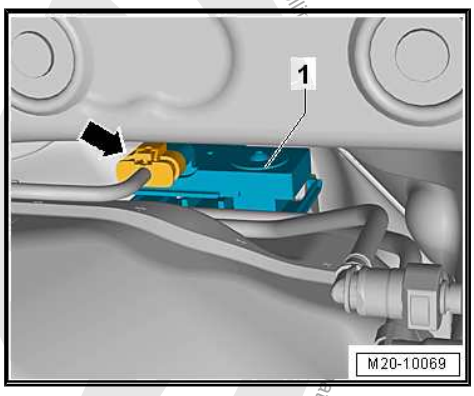

– Push the Fuel Tank Leak Detection Control Module - J909- -1- upward evenly on both sides -arrows-, until it engages audibly.

– Remove the Fuel Tank Leak Detection Control Module - J909- -1- from the bracket -2-.

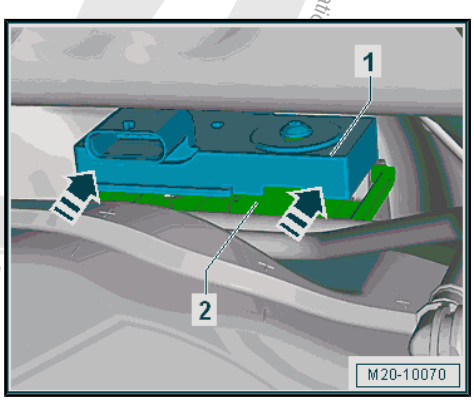

Installing

Install in reverse order of removal. Note the following.

Protected by copyright. Copying for private or commercial purposes, in part or in whole, is not permitted unless authorised by Volkswagen AG. Volkswagen AG does not guarantee or accept any liability

Protected by copyright. Copyright for private or commercial purposes, in part or in whole, is not permitted unless authorised by Volkswagen AG. Volkswagen AG does not guarantee or accept any liability with respect to the correctness of information in this document. Copyright by Volkswagen AG.

– Engage the Fuel Tank Leak Detection Control Module - J909- -1- correctly in the mount -2-.
– Pull the Fuel Tank Leak Detection Control Module - J909- evenly downward until it engages audibly.

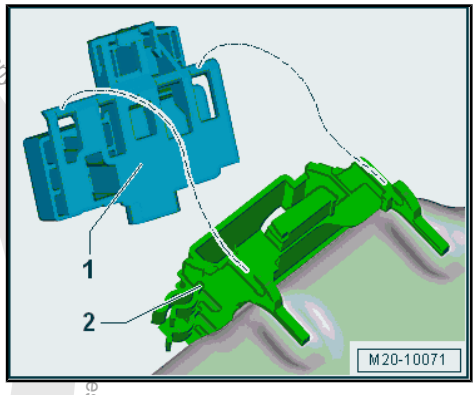

10 Special Tools

wagen AG. Volkswagen AG do

Special tools and workshop equipment required

- Trim Removal Wedge - 3409-
- Wrench - Fuel Sending Unit - T10202-
- Torque Wrench 1332 40-200Nm - VAG1332-
- Fuel Extracting Device - VAS5190-

ercial purposes, in part or in whole

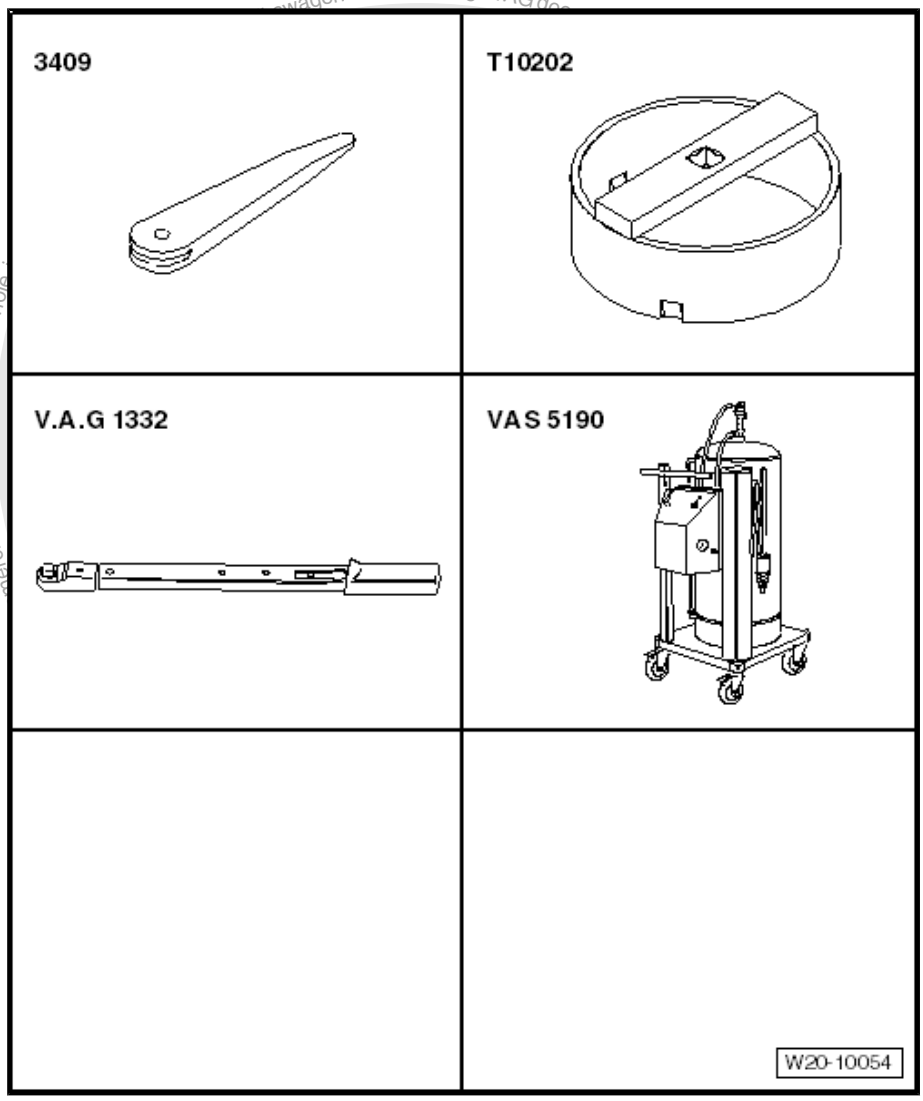

Protected by copyright. Copying for private or commercial purposes, in part or in whole, is not permitted unless authorised by Volkswagen AG. Volkswagen AG does not guarantee or accept

- Pressure Tester Kit - VAS6550-
- Pressure Tester Kit - Adapter Set - Hose 3 - VAS6550/3-3-
- Pressure Tester Kit - Adapter Set - Hose 4 - VAS6550/3-4-

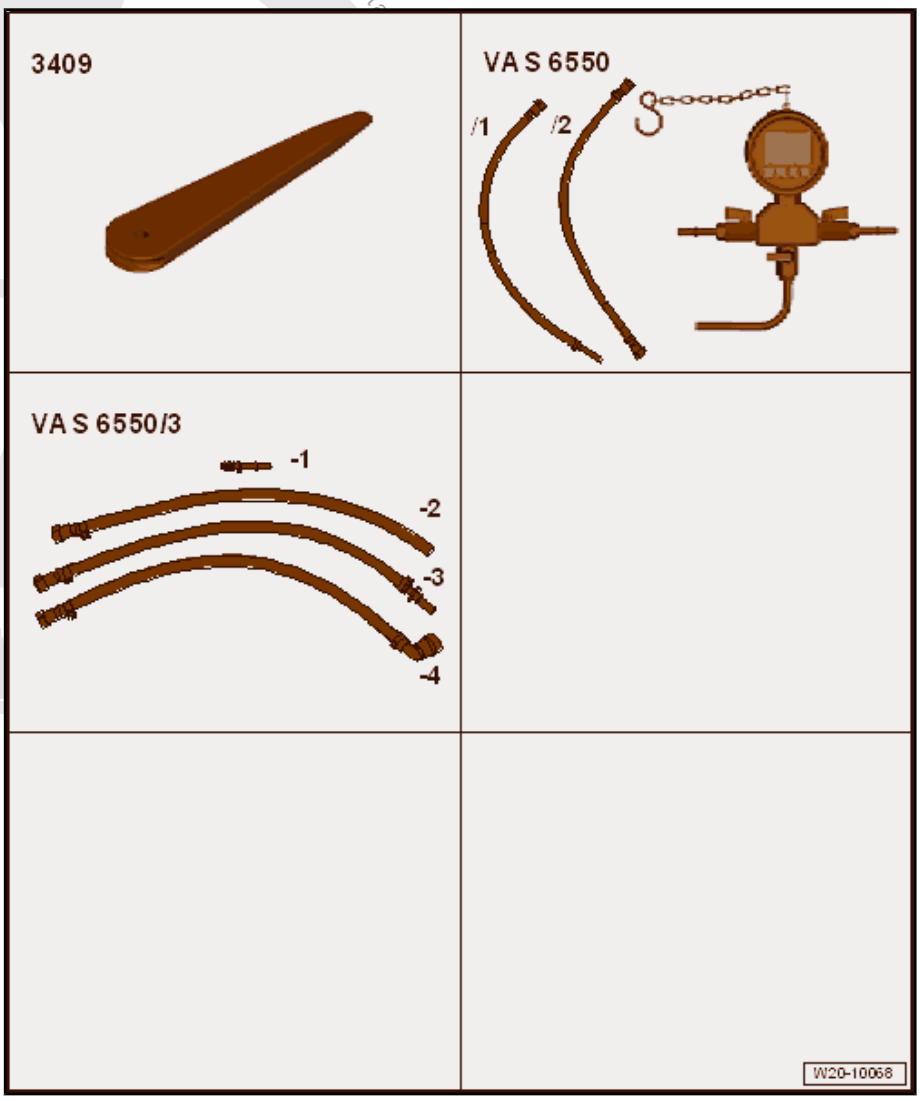

- Lever - Fuel Line - T10468-

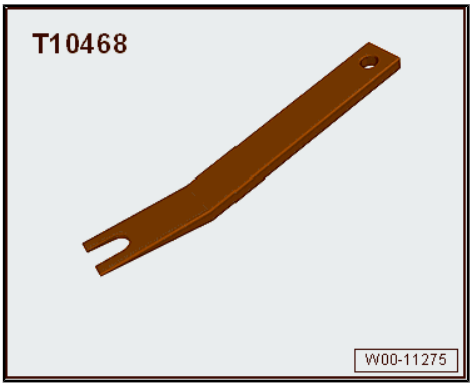

- Torque Wrench 1331 5-50Nm - VAG1331-

- Connector Test Set - VAG1594D-

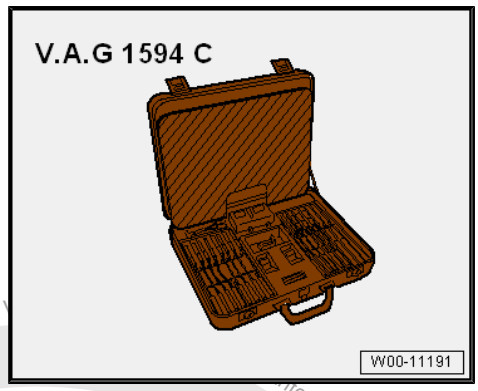

- Engine Bung Set - VAS6122-

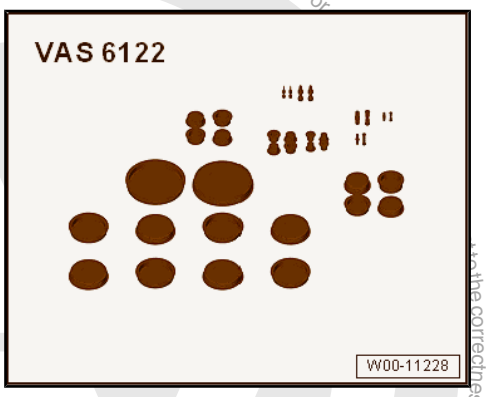

- Hand Vacuum Pump - VAS6213-

Protected by copyright. Copying for private or commercial purposes, in part or in whole, is not permitted unless authorised by Volkswagen AG.

- Pressure Tester Kit - Adapter Set - Hose 3 - VAS6550/3-3-

- Pressure Regulator Valve - VAS6550/4-

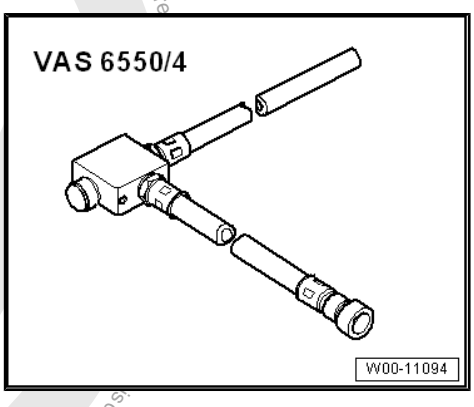

- Engine and Gearbox Jack - VAS6931-

- Hose Clamps - Up To 25 mm - 3094-

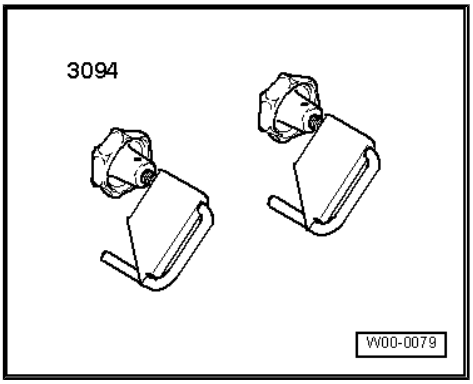

- Multimeter, for example Analog/Digital Multimeter - FLU83III-
- Evaporative Emissions Tester - KLI9210-
- Evaporative Emissions Tester - Adapter 55 - KLI9210/55-1-
- Injection Rate Comparison Meter Kit - Remote Cable - VAG1348/3A-

Protected by copyright. Copying for private or commercial purposes, in part or in whole, is not permitted unless authorised by Volkswagen AG. Volkswagen AG does not guarantee

- Fuel Extractor Unit - VAS5190A- (without illustration) for E 85 - fuel type.
- Vehicle Diagnostic Tester - Test Adapter - 5 Pin - VAS5565-
- Pressure Tester Kit - Adapter Set - Hose 4 - VAS6550/3-4-
- Vehicle Diagnostic Tester

Protected by copyright. Copying for private or commercial purposes, in part or in whole, is not permitted unless authorised by Volkswagen AG. Volkswagen AG does not guarantee or accept any liability with respect to the correctness of information in this document. Copyright by Volkswagen AG.

11 Revision History

DRUCK NUMBER: K0059240921

Factory Edition	Edit Edition	Job Type	Feedback	Notes	Quality Checked By
01.2016	02/24/2016	Factory Update	N/A		Joe Y
08.2015	11/25/2015	Factory Update	N/A		Eric P.
05.2015	10/08/2015	Local Feedback	1127314	Change RON rating for CXCB from 95 to 91 starting in 2016	Eric P.
05.2015	8/14/2015			Editorial Review - Added MRP's	Jim H
05.2015	07/01/2015	Local Feedback	1095701	Added steps to remove suction hose at bottom of the fuel delivery unit	Eric P.
05.2015	06/26/2015	Factory Update	N/A		Eric P.
02.2015	05/27/2015	Local Feedback	1095235	Added engine CXCB to metadata per factory	Eric P.
02.2015	02/24/2015	Factory Update	N/A	Added sales code BX5 to metadata.	Eric P.
07.2014	10/15/2014	Launch CO	N/A		Eric P.
04.2014	6/12/2014	Factory Revision	N/A		Joe Y.
01.2014	4/02/2014	Factory New	N/A		Joe Y.

Protected by copyright. Copying for private or commercial purposes, in part or in whole, is not permitted unless authorised by Volkswagen AG. Volkswagen AG does not guarantee or accept any liability with respect to the correctness of information in this document. Copyright by Volkswagen AG.

Cautions & Warnings

Please read these WARNINGS and CAUTIONS before proceeding with maintenance and repair work. You must answer that you have read and you understand these WARNINGS and CAUTIONS before you will be allowed to view this information.

- If you lack the skills, tools and equipment, or a suitable workshop for any procedure described in this manual, we suggest you leave such repairs to an authorized Volkswagen retailer or other qualified shop. We especially urge you to consult an authorized Volkswagen retailer before beginning repairs on any vehicle that may still be covered wholly or in part by any of the extensive warranties issued by Volkswagen.

- Disconnect the battery negative terminal (ground strap) whenever you work on the fuel system or the electrical system. Do not smoke or work near heaters or other fire hazards. Keep an approved fire extinguisher handy.

- Volkswagen is constantly improving its vehicles and sometimes these changes, both in parts and specifications, are made applicable to earlier models. Therefore, part numbers listed in this manual are for reference only. Always check with your authorized Volkswagen retailer parts department for the latest information.

- Any time the battery has been disconnected on an automatic transmission vehicle, it will be necessary to reestablish Transmission Control Module (TCM) basic settings using the VAG 1551 Scan Tool (ST).

- Never work under a lifted vehicle unless it is solidly supported on stands designed for the purpose. Do not support a vehicle on cinder blocks, hollow tiles or other props that may crumble under continuous load. Never work under a vehicle that is supported solely by a jack. Never work under the vehicle while the engine is running.

- For vehicles equipped with an anti-theft radio, be sure of the correct radio activation code before disconnecting the battery or removing the radio. If the wrong code is entered when the power is restored, the radio may lock up and become inoperable, even if the correct code is used in a later attempt.

- If you are going to work under a vehicle on the ground, make sure that the ground is level. Block the wheels to keep the vehicle from rolling. Disconnect the battery negative terminal (ground strap) to prevent others from starting the vehicle while you are under it.

- Do not attempt to work on your vehicle if you do not feel well. You increase the danger of injury to yourself and others if you are tired, upset or have taken medicine or any other substances that may impair you or keep you from being fully alert.

- Never run the engine unless the work area is well ventilated. Carbon monoxide (CO) kills.

- Always observe good workshop practices. Wear goggles when you operate machine tools or work with acid. Wear goggles, gloves and other protective clothing whenever the job requires working with harmful substances.

- Tie long hair behind your head. Do not wear a necktie, a scarf, loose clothing, or a necklace when you work near machine tools or running engines. If your hair, clothing, or jewelry were to get caught in the machinery, severe injury could result.

- Do not re-use any fasteners that are worn or deformed in normal use. Some fasteners are designed to be used only once and are unreliable and may fail if used a second time. This includes, but is not limited to, nuts, bolts, washers, circlips and cotter pins. Always follow the recommendations in this manual - replace these fasteners with new parts where indicated, and any other time it is deemed necessary by inspection.

next

© 2002 Volkswagen of America, Inc.
All rights reserved. Information contained in this document is based on the latest information available at the time of printing and is subject to the copyright and other intellectual property rights of Volkswagen of America, Inc., its affiliated companies and its licensors. All rights are reserved to make changes at any time without notice. No part of this document may be reproduced, stored in a retrieval system, or transmitted in any form or by any means, electronic, mechanical, photocopying, recording, or otherwise, nor may these materials be modified or reposted to other sites, without the prior expressed written permission of the publisher.
Version 1.0

Cautions & Warnings

- Illuminate the work area adequately but safely. Use a portable safety light for working inside or under the vehicle. Make sure the bulb is enclosed by a wire cage. The hot filament of an accidentally broken bulb can ignite spilled fuel or oil.

- Friction materials such as brake pads and clutch discs may contain asbestos fibers. Do not create dust by grinding, sanding, or by cleaning with compressed air. Avoid breathing asbestos fibers and asbestos dust. Breathing asbestos can cause serious diseases such as asbestosis or cancer, and may result in death.

- Finger rings should be removed so that they cannot cause electrical shorts, get caught in running machinery, or be crushed by heavy parts.

- Before starting a job, make certain that you have all the necessary tools and parts on hand. Read all the instructions thoroughly; do not attempt shortcuts. Use tools that are appropriate to the work and use only replacement parts meeting Volkswagen specifications. Makeshift tools, parts and procedures will not make good repairs.

- Catch draining fuel, oil or brake fluid in suitable containers. Do not use empty food or beverage containers that might mislead someone into drinking from them. Store flammable fluids away from fire hazards. Wipe up spills at once, but do not store the oily rags, which can ignite and burn spontaneously.

- Use pneumatic and electric tools only to loosen threaded parts and fasteners. Never use these tools to tighten fasteners, especially on light alloy parts. Always use a torque wrench to tighten fasteners to the tightening torque listed.

- Keep sparks, lighted matches, and open flame away from the top of the battery. If escaping hydrogen gas is ignited, it will ignite gas trapped in the cells and cause the battery to explode.

- Be mindful of the environment and ecology. Before you drain the crankcase, find out the proper way to dispose of the oil. Do not pour oil onto the ground, down a drain, or into a stream, pond, or lake. Consult local ordinances that govern the disposal of wastes.

- The air-conditioning (A/C) system is filled with a chemical refrigerant that is hazardous. The A/C system should be serviced only by trained automotive service technicians using approved refrigerant recovery/recycling equipment, trained in related safety precautions, and familiar with regulations governing the discharging and disposal of automotive chemical refrigerants.

- Before doing any electrical welding on vehicles equipped with anti-lock brakes (ABS), disconnect the battery negative terminal (ground strap) and the ABS control module connector.

- Do not expose any part of the A/C system to high temperatures such as open flame. Excessive heat will increase system pressure and may cause the system to burst.

- When boost-charging the battery, first remove the fuses for the Engine Control Module (ECM), the Transmission Control Module (TCM), the ABS control module, and the trip computer. In cases where one or more of these components is not separately fused, disconnect the control module connector(s).

- Some of the vehicles covered by this manual are equipped with a supplemental restraint system (SRS), that automatically deploys an airbag in the event of a frontal impact. The airbag is operated by an explosive device. Handled improperly or without adequate safeguards, it can be accidentally activated and cause serious personal injury. To guard against personal injury or airbag system failure, only trained Volkswagen Service technicians should test, disassemble or service the airbag system.

© 2002 Volkswagen of America, Inc.
All rights reserved. Information contained in this document is based on the latest information available at the time of printing and is subject to the copyright and other intellectual property rights of Volkswagen of America, Inc., its affiliated companies and its licensors. All rights are reserved to make changes at any time without notice. No part of this document may be reproduced, stored in a retrieval system, or transmitted in any form or by any means, electronic, mechanical, photocopying, recording, or otherwise, nor may these materials be modified or reposted to other sites, without the prior expressed written permission of the publisher.
Version 1.0

Cautions & Warnings

- Do not quick-charge the battery (for boost starting) for longer than one minute, and do not exceed 16.5 volts at the battery with the boosting cables attached. Wait at least one minute before boosting the battery a second time.

- Never use a test light to conduct electrical tests of the airbag system. The system must only be tested by trained Volkswagen Service technicians using the VAG 1551 Scan Tool (ST) or an approved equivalent. The airbag unit must never be electrically tested while it is not installed in the vehicle.

- Some aerosol tire inflators are highly flammable. Be extremely cautious when repairing a tire that may have been inflated using an aerosol tire inflator. Keep sparks, open flame or other sources of ignition away from the tire repair area. Inflate and deflate the tire at least four times before breaking the bead from the rim. Completely remove the tire from the rim before attempting any repair.

- When driving or riding in an airbag-equipped vehicle, never hold test equipment in your hands or lap while the vehicle is in motion. Objects between you and the airbag can increase the risk of injury in an accident.

I have read and I understand these Cautions and Warnings.

back OK

Protected by copyright. Copying for private or commercial purposes, in part or in whole, is not permitted unless authorised by Volkswagen AG. Volkswagen AG does not guarantee or accept any liability with respect to the correctness of information in this document. Copyright by Volkswagen AG.

© 2002 Volkswagen of America, Inc.
All rights reserved. Information contained in this document is based on the latest information available at the time of printing and is subject to the copyright and other intellectual property rights of Volkswagen of America, Inc., its affiliated companies and its licensors. All rights are reserved to make changes at any time without notice. No part of this document may be reproduced, stored in a retrieval system, or transmitted in any form or by any means, electronic, mechanical, photocopying, recording, or otherwise, nor may these materials be modified or reposted to other sites, without the prior expressed written permission of the publisher.
Version 1.0