2008 Pontiac Vibe Owner Manual

Seats and Restraint Systems 1-1
Front Seats 1-2
Rear Seats 1-8
Safety Belts 1-10
Child Restraints 1-27
Airbag System 1-50
Restraint System Check 1-66

Features and Controls 2-1
Keys 2-2
Doors and Locks 2-7
Windows 2-12
Theft-Deterrent Systems 2-14
Starting and Operating Your Vehicle 2-18
Mirrors 2-33
OnStar® System 2-35
Storage Areas 2-39
Sunroof 2-43

Instrument Panel 3-1
Instrument Panel Overview 3-4
Climate Controls 3-20
Warning Lights, Gages, and Indicators 3-25
Audio System(s) 3-42

Driving Your Vehicle 4-1
Your Driving, the Road, and Your Vehicle 4-2
Towing 4-25

Service and Appearance Care 5-1
Service 5-3
Fuel 5-5
Checking Things Under the Hood 5-10
Headlamp Aiming 5-42
Bulb Replacement 5-43
Windshield Wiper Blade Replacement 5-48
Tires 5-49
Appearance Care 5-82
Vehicle Identification 5-90
Electrical System 5-90
Capacities and Specifications 5-95
Maintenance Replacement Parts 5-96

Maintenance Schedule 6-1
Maintenance Schedule 6-2

Customer Assistance Information 7-1
Customer Assistance and Information 7-2
Reporting Safety Defects 7-14
Vehicle Data Recording and Privacy 7-16

Index 1

Downloaded from www.Manualslib.com manuals search engine

GENERAL MOTORS, GM, the GM Emblem, PONTIAC, the PONTIAC Emblem and the name VIBE are registered trademarks of General Motors Corporation.

This manual includes the latest information at the time it was printed. We reserve the right to make changes after that time without further notice. For vehicles first sold in Canada, substitute the name “General Motors of Canada Limited” for Pontiac Division whenever it appears in this manual.

This manual describes features that may be available in this model, but your vehicle may not have all of them. For example, more than one entertainment system may be offered or your vehicle may have been ordered without a front passenger or rear seats.

Keep this manual in the vehicle for quick reference.

Canadian Owners

A French language copy of this manual can be obtained from your dealer/retailer or from:

Helm, Incorporated
P.O. Box 07130
Detroit, MI 48207

1-800-551-4123
www.helminc.com

Propriétaires Canadiens

On peut obtenir un exemplaire de ce guide en français auprès de concessionnaire ou à l’adresse suivante:

Helm Incorporated
P.O. Box 07130
Detroit, MI 48207

1-800-551-4123
www.helminc.com

Litho in U.S.A.
Part No. 15863403 A First Printing

©2007 General Motors Corporation. All Rights Reserved.

Downloaded from www.Manualslib.com manuals search engine

Using this Manual

Many people read the owner manual from beginning to end when they first receive their new vehicle to learn about the vehicle's features and controls. Pictures and words work together to explain things.

Index

A good place to quickly locate information about the vehicle is the Index in the back of the manual. It is an alphabetical list of what is in the manual and the page number where it can be found.

Safety Warnings and Symbols

There are a number of safety cautions in this book. A box with the word CAUTION is used to tell about things that could hurt you or others if you were to ignore the warning.

⚠ CAUTION:

These mean there is something that could hurt you or other people.

We tell you what the hazard is and what to do to help avoid or reduce the hazard. Please read these cautions. If you do not, you or others could be hurt.

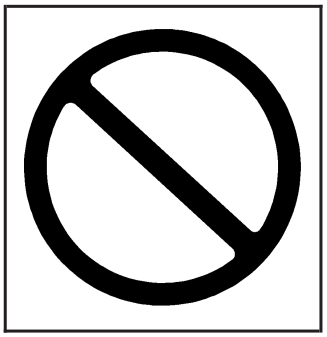

A circle with a slash through it is a safety symbol which means "Do Not," "Do Not do this" or "Do Not let this happen."

Downloaded from www.Manualslib.com manuals search engine

Vehicle Damage Warnings

You will also find notices in this manual.

Notice: **These mean there is something that could damage your vehicle.**

A notice tells about something that can damage the vehicle. Many times, this damage would not be covered by your vehicle's warranty, and it could be costly. The notice tells what to do to help avoid the damage.

When you read other manuals, you might see CAUTION and NOTICE warnings in different colors or in different words.

There are also warning labels on the vehicle which use the same words, CAUTION or NOTICE.

Vehicle Symbols

The vehicle has components and labels that use symbols instead of text. Symbols are shown along with the text describing the operation or information relating to a specific component, control, message, gage, or indicator.

Downloaded from www.Manualslib.com manuals search engine

Section 1 Seats and Restraint Systems

Front Seats 1-2
Manual Seats 1-2
Seat Height Adjuster 1-3
Reclining Seatbacks 1-3
Head Restraints 1-5
Passenger Folding Seatback 1-6

Rear Seats 1-8
Rear Seat Operation 1-8

Safety Belts 1-10
Safety Belts: They Are for Everyone 1-10
How to Wear Safety Belts Properly 1-15
Lap-Shoulder Belt 1-23
Safety Belt Use During Pregnancy 1-26
Safety Belt Extender 1-26

Child Restraints 1-27
Older Children 1-27
Infants and Young Children 1-30
Child Restraint Systems 1-33
Where to Put the Restraint 1-36
Lower Anchors and Tethers for Children (LATCH) 1-37
Securing a Child Restraint in a Rear Seat Position 1-44
Securing a Child Restraint in the Right Front Seat Position 1-46

Airbag System 1-50
Where Are the Airbags? 1-52
When Should an Airbag Inflate? 1-55
What Makes an Airbag Inflate? 1-57
How Does an Airbag Restrain? 1-57
What Will You See After an Airbag Inflates? 1-58
Passenger Sensing System 1-59
Servicing Your Airbag-Equipped Vehicle 1-64
Adding Equipment to Your Airbag-Equipped Vehicle 1-65

Restraint System Check 1-66
Checking the Restraint Systems 1-66
Replacing Restraint System Parts After a Crash 1-67

Downloaded from www.Manualslib.com manuals search engine

Front Seats

Manual Seats

⚠ CAUTION:

You can lose control of the vehicle if you try to adjust a manual driver's seat while the vehicle is moving. The sudden movement could startle and confuse you, or make you push a pedal when you do not want to. Adjust the driver's seat only when the vehicle is not moving.

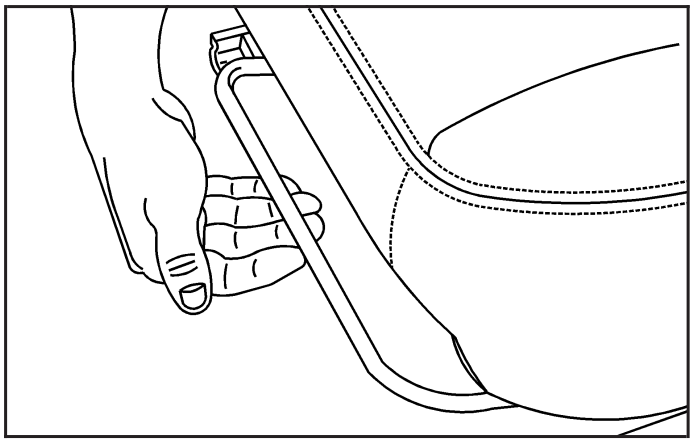

Lift the bar located under the front of the seat to unlock it. Slide the seat to where you want it and release the bar. Try to move the seat with your body to be sure the seat is locked in place.

Downloaded from www.Manualslib.com manuals search engine

Seat Height Adjuster

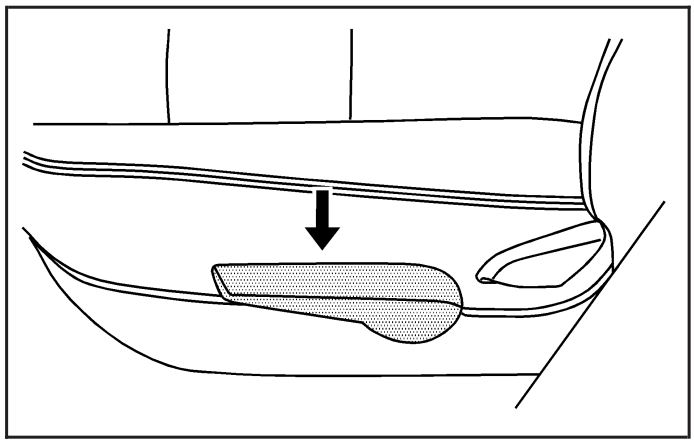

The driver seat height adjuster is located on the outboard side of the seat. To raise the seat, pull up on the lever repeatedly until the seat is at the desired height. To lower the seat, push down on the lever repeatedly until the seat is at the desired height.

It is easier to use the adjuster when the seat is unoccupied.

Reclining Seatbacks

⚠ CAUTION:

You can lose control of the vehicle if you try to adjust a manual driver's seat while the vehicle is moving. The sudden movement could startle and confuse you, or make you push a pedal when you do not want to. Adjust the driver's seat only when the vehicle is not moving.

⚠ CAUTION:

If the seatback is not locked, it could move forward in a sudden stop or crash. That could cause injury to the person sitting there. Always push and pull on the seatback to be sure it is locked.

The seats have manual reclining seatbacks. The lever used to operate them is located on the outboard side of the seats.

Downloaded from www.Manualslib.com manuals search engine

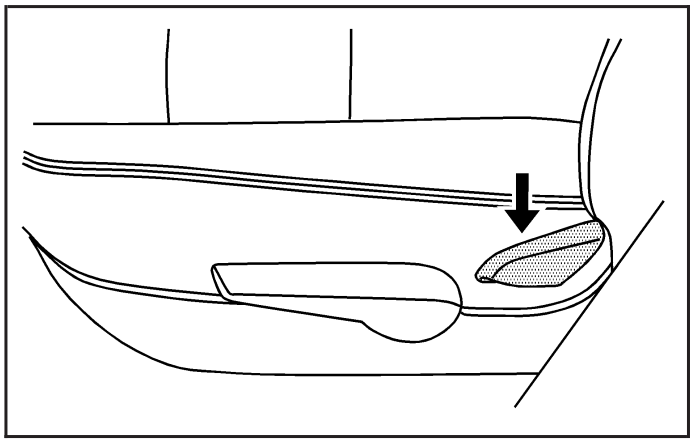

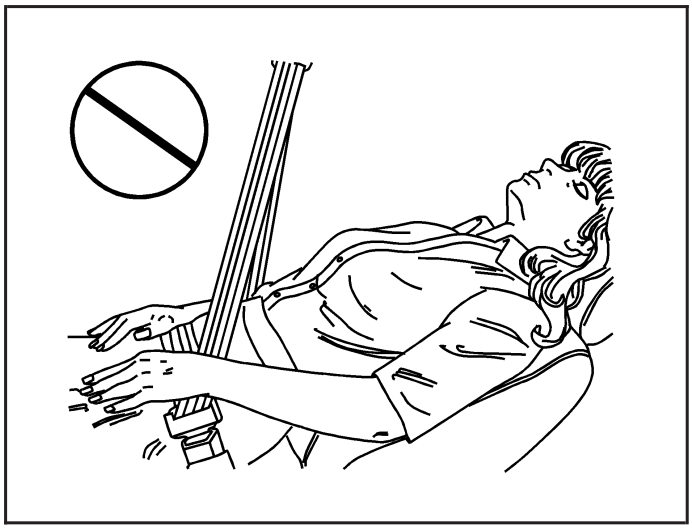

To recline the seatback, do the following:

1. Lift the recline lever.
2. Move the seatback to the desired position, then release the lever to lock the seatback in place.
3. Push and pull on the seatback to make sure it is locked.

To return the seatback to an upright position, do the following:

1. Lift the lever fully without applying pressure to the seatback and the seatback will return to the upright position.
2. Push and pull on the seatback to make sure it is locked.

Downloaded from www.Manualslib.com manuals search engine

⚠ CAUTION:

Sitting in a reclined position when your vehicle is in motion can be dangerous. Even if you buckle up, your safety belts cannot do their job when you are reclined like this.

The shoulder belt cannot do its job because it will not be against your body. Instead, it will be in front of you. In a crash, you could go into it, receiving neck or other injuries.

The lap belt cannot do its job either. In a crash, the belt could go up over your abdomen. The belt forces would be there, not at your pelvic bones. This could cause serious internal injuries.

For proper protection when the vehicle is in motion, have the seatback upright. Then sit well back in the seat and wear your safety belt properly.

Do not have a seatback reclined if your vehicle is moving.

Head Restraints

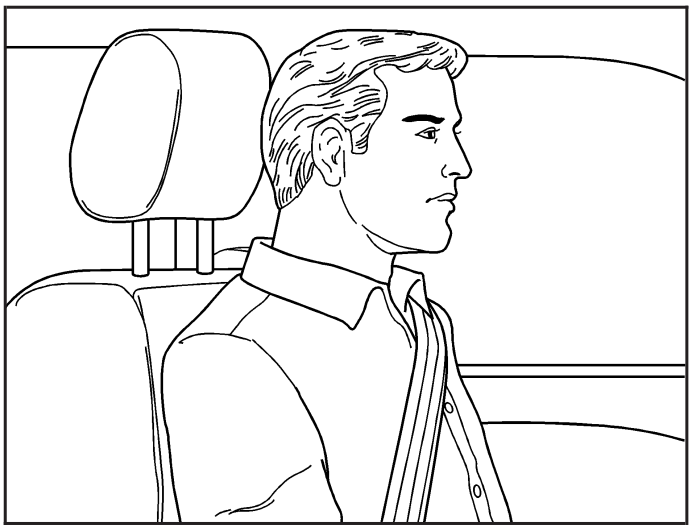

Adjust the head restraint so that the top of the restraint is at the same height as the occupant's head. This position reduces the chance of a neck injury in a crash.

Downloaded from www.Manualslib.com manuals search engine

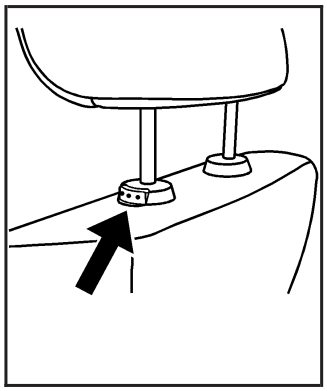

Pull the head restraint up to raise it. To lower the head restraint, press the button, located on the top of the seatback, and push the head restraint down.

The rear seats may have head restraints that can be adjusted in height like the front head restraints.

Passenger Folding Seatback

⚠ CAUTION:

If you fold the seatback forward to carry longer objects, such as skis, be sure any such cargo is not near an airbag. In a crash, an inflating airbag might force that object toward a person. This could cause severe injury or even death. Secure objects away from the area in which an airbag would inflate. For more information, see *Where Are the Airbags? on page 1-52* and *Loading Your Vehicle on page 4-19*.

⚠ CAUTION:

Things you put on this seatback can strike and injure people in a sudden stop or turn, or in a crash. Remove or secure all items before driving.

Downloaded from www.Manualslib.com manuals search engine

You can fold the front passenger's seatback down to allow for more cargo space or as a temporary table while the vehicle is stopped. When the area is not being used for more cargo space, the seatback should be placed in the locked, upright position.

To fold the seatback down, do the following:

1. Lower the head restraint to the lowest position and make sure the seatback is at the most upright position and locked.

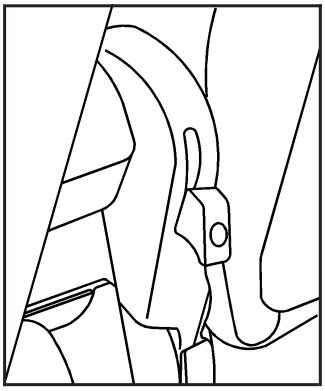

2. Pull up on one of the levers located on either side of the back of the passenger's seatback.

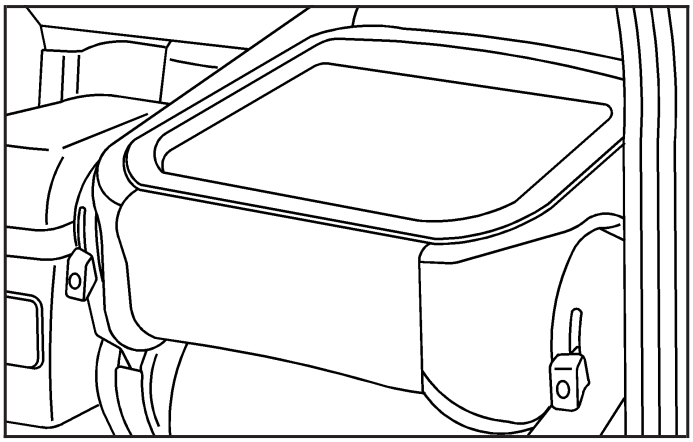

3. Fold the seatback down.

To raise the seatback, do the following:

1. Pull up on one of the levers located on either side of the back of the passenger's seatback.
2. Pull the seatback up and push it back to lock it into place. Make sure the safety belt is not twisted or caught in the seatback.
3. Push and pull the top of the seatback to be sure it is locked into position.
4. Use the reclining front seatback lever to adjust the seatback to a comfortable position.

Downloaded from www.Manualslib.com manuals search engine

Rear Seats

Rear Seat Operation

You can fold either side of the seatback down for more cargo space. The rear right side seatback can also be used as a temporary table while the vehicle is stopped. Make sure the front seatback is not reclined or in the rearward most position. If it is, the rear seatback will not fold down all the way.

⚠ CAUTION:

A rear seatback folded forward, or any other object contacting or pressing the front seatback may affect the proper functioning of the passenger sensing system. See *Passenger Sensing System on page 1-59*.

To fold either seatback down, do the following:

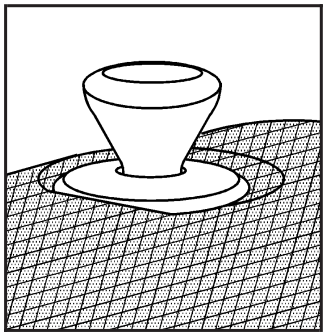

1. Pull up on the lock release knob, located on the top outboard side of the seatbacks.

Notice: **Folding a rear seat with the safety belts still fastened may cause damage to the seat or the safety belts. Always unbuckle the safety belts and return them to their normal stowed position before folding a rear seat.**

2. Fold the seatback down. Each seatback can be folded separately.

Downloaded from www.Manualslib.com manuals search engine

To raise the seatback, do the following:

⚠ CAUTION:

A safety belt that is improperly routed, not properly attached, or twisted will not provide the protection needed in a crash. The person wearing the belt could be seriously injured. After raising the rear seatback, always check to be sure that the safety belts are properly routed and attached, and are not twisted.

⚠ CAUTION:

If the seatback is not locked, it could move forward in a sudden stop or crash. That could cause injury to the person sitting there. Always push and pull on the seatback to be sure it is locked.

1. Pull the seatback up and push it back to lock it into place. Make sure the safety belts are not twisted or caught in the seatback.
2. Push and pull the top of the seatback to be sure it is locked into position.

Downloaded from www.Manualslib.com manuals search engine

Safety Belts

Safety Belts: They Are for Everyone

This part of the manual tells you how to use safety belts properly. It also tells you some things you should not do with safety belts.

⚠ CAUTION:

Do not let anyone ride where he or she cannot wear a safety belt properly. If you are in a crash and you are not wearing a safety belt, your injuries can be much worse. You can hit things inside the vehicle harder or be ejected from it and be seriously injured or killed. In the same crash, you might not be, if you are buckled up. Always fasten your safety belt, and check that your passenger(s) are restrained properly too.

⚠ CAUTION:

It is extremely dangerous to ride in a cargo area, inside or outside of a vehicle. In a collision, people riding in these areas are more likely to be seriously injured or killed. Do not allow people to ride in any area of your vehicle that is not equipped with seats and safety belts. Be sure everyone in your vehicle is in a seat and using a safety belt properly.

Your vehicle has indicators as a reminder to buckle your safety belts. See *Safety Belt Reminders on page 3-28*.

In most states and in all Canadian provinces, the law requires wearing safety belts. Here is why:

You never know if you will be in a crash. If you do have a crash, you do not know if it will be a serious one.

A few crashes are mild, and some crashes can be so serious that even buckled up, a person would not survive. But most crashes are in between. In many of them, people who buckle up can survive and sometimes walk away. Without belts they could have been badly hurt or killed.

After more than 40 years of safety belts in vehicles, the facts are clear. In most crashes buckling up does matter... a lot!

Downloaded from www.Manualslib.com manuals search engine

Why Safety Belts Work

When you ride in or on anything, you go as fast as it goes.

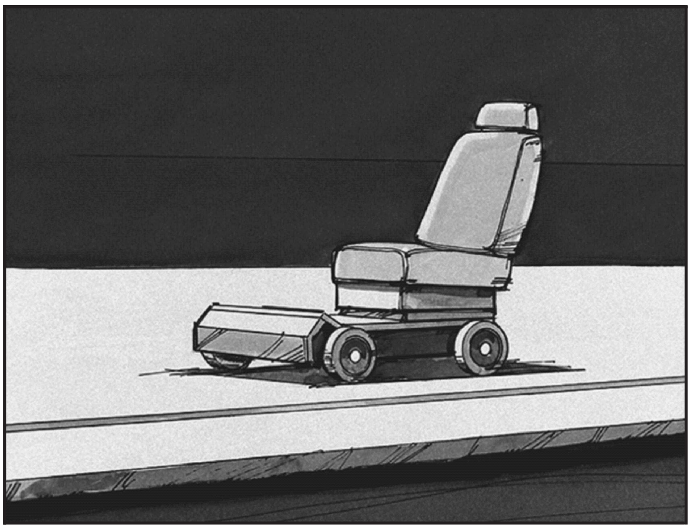

Take the simplest vehicle. Suppose it is just a seat on wheels.

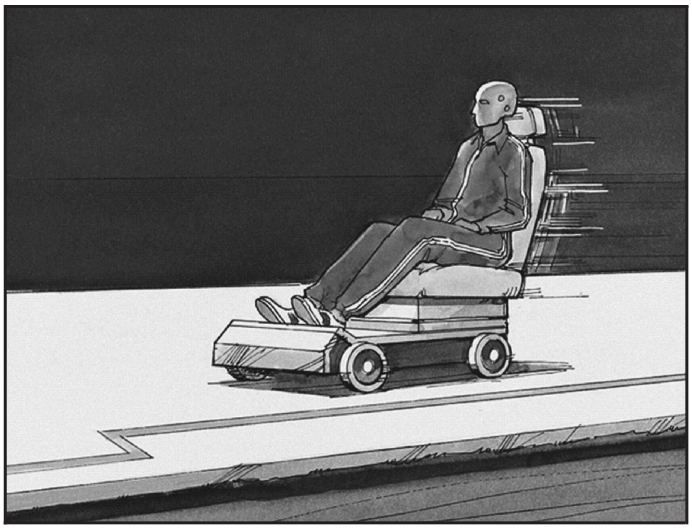

Put someone on it.

Downloaded from www.Manualslib.com manuals search engine

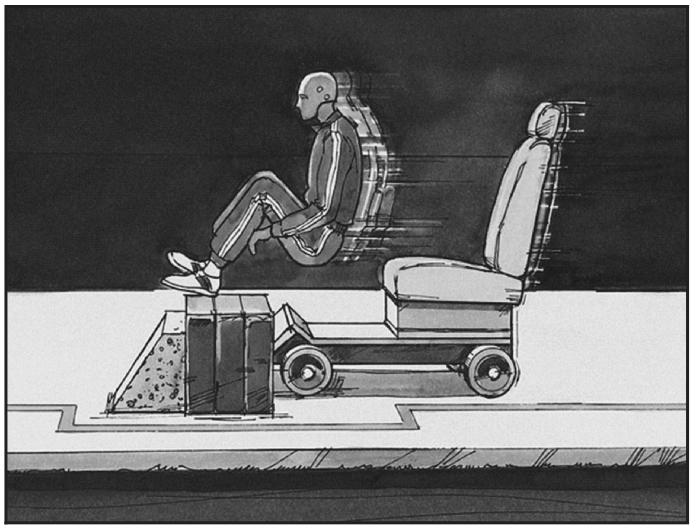

Get it up to speed. Then stop the vehicle.
The rider does not stop.

The person keeps going until stopped by something.
In a real vehicle, it could be the windshield...

Downloaded from www.Manualslib.com manuals search engine

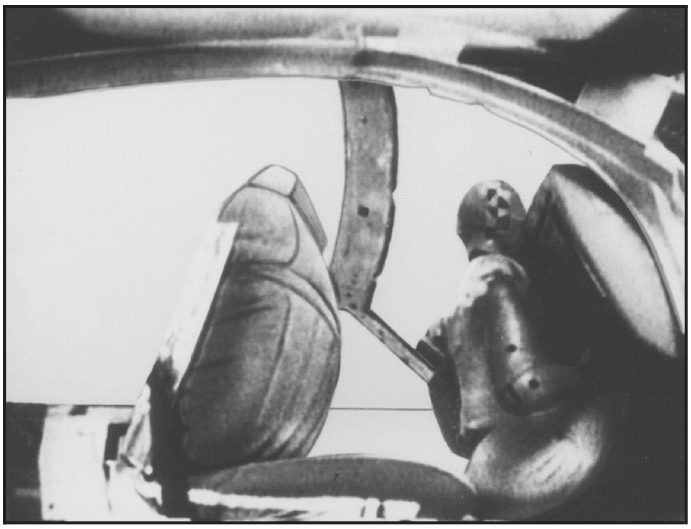

or the instrument panel...

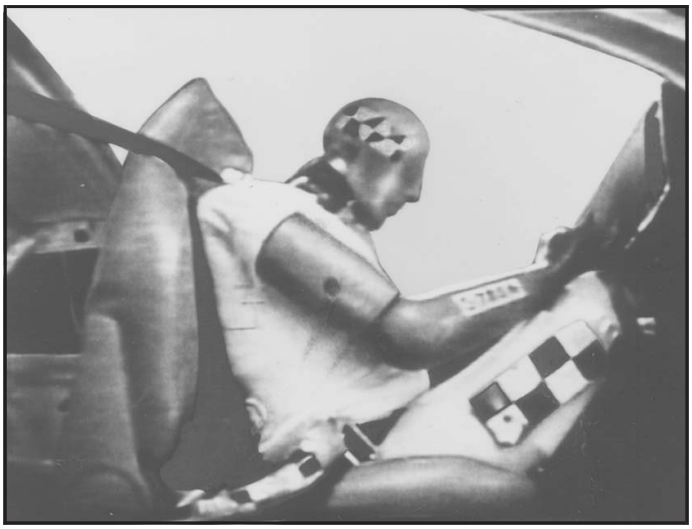

or the safety belts!

With safety belts, you slow down as the vehicle does. You get more time to stop. You stop over more distance, and your strongest bones take the forces. That is why safety belts make such good sense.

Downloaded from www.Manualslib.com manuals search engine

Questions and Answers About Safety Belts

Q: Will I be trapped in the vehicle after a crash if I am wearing a safety belt?

A: You *could* be — whether you are wearing a safety belt or not. But your chance of being conscious during and after an accident, so you *can* unbuckle and get out, is *much* greater if you are belted. And you can unbuckle a safety belt, even if you are upside down.

Q: If my vehicle has airbags, why should I have to wear safety belts?

A: Airbags are supplemental systems only; so they work *with* safety belts — not instead of them. Whether or not an airbag is provided, all occupants still have to buckle up to get the most protection. That is true not only in frontal collisions, but especially in side and other collisions.

Q: If I am a good driver, and I never drive far from home, why should I wear safety belts?

A: You may be an excellent driver, but if you are in a crash — even one that is not your fault — you and your passenger(s) can be hurt. Being a good driver does not protect you from things beyond your control, such as bad drivers.

Most accidents occur within 25 miles (40 km) of home. And the greatest number of serious injuries and deaths occur at speeds of less than 40 mph (65 km/h).

Safety belts are for everyone.

Downloaded from www.Manualslib.com manuals search engine

How to Wear Safety Belts Properly

This section is only for people of adult size.

Be aware that there are special things to know about safety belts and children. And there are different rules for smaller children and babies. If a child will be riding in your vehicle, see *Older Children on page 1-27* or *Infants and Young Children on page 1-30*. Follow those rules for everyone's protection.

It is very important for all occupants to buckle up. Statistics show that unbelted people are hurt more often in crashes than those who are wearing safety belts.

Occupants who are not buckled up can be thrown out of the vehicle in a crash. And they can strike others in the vehicle who are wearing safety belts.

First, before you or your passenger(s) wear a safety belt, there is important information you should know.

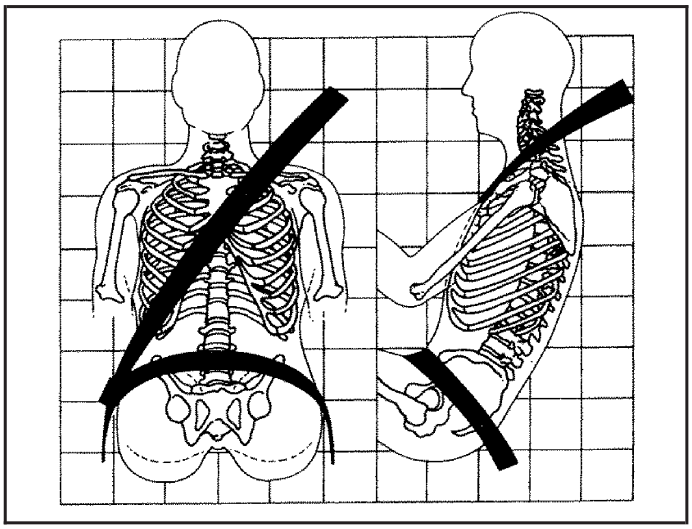

Sit up straight and always keep your feet on the floor in front of you. The lap part of the belt should be worn low and snug on the hips, just touching the thighs. In a crash, this applies force to the strong pelvic bones and you would be less likely to slide under the lap belt. If you slid under it, the belt would apply force on your abdomen. This could cause serious or even fatal injuries. The shoulder belt should go over the shoulder and across the chest. These parts of the body are best able to take belt restraining forces.

The shoulder belt locks if there is a sudden stop or crash.

Downloaded from www.Manualslib.com manuals search engine

Q: What is wrong with this?

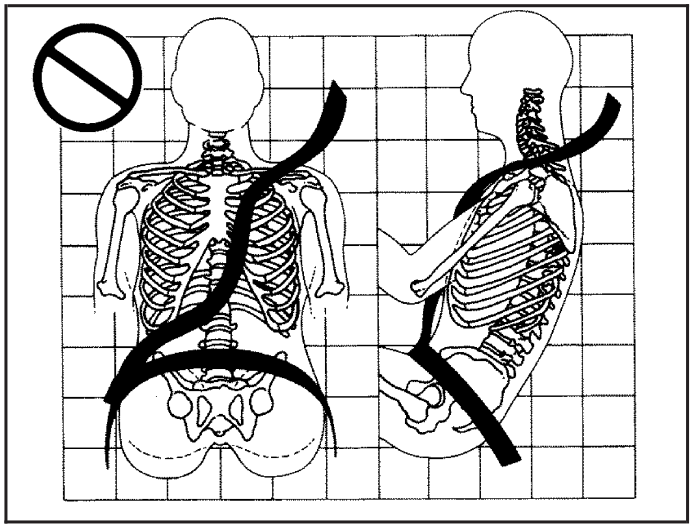

A: The shoulder belt is too loose. It will not give nearly as much protection this way.

⚠ CAUTION:

You can be seriously hurt if your shoulder belt is too loose. In a crash, you would move forward too much, which could increase injury. The shoulder belt should fit snugly against your body.

Downloaded from www.Manualslib.com manuals search engine

Q: What is wrong with this?

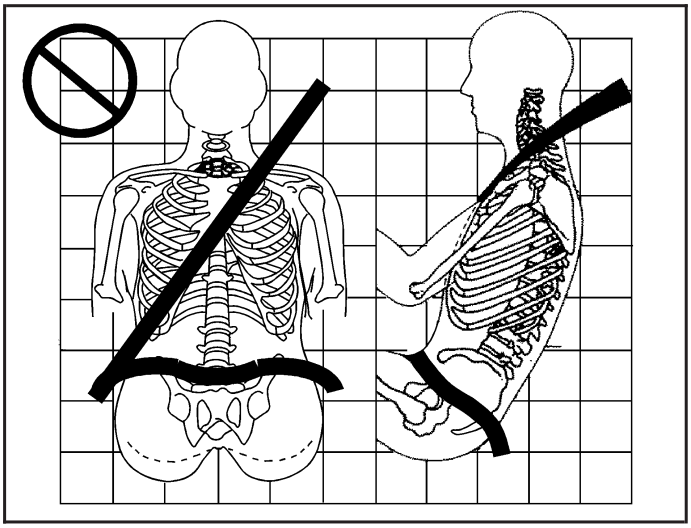

A: The lap belt is too loose. It will not give as much protection this way.

⚠ CAUTION:

You can be seriously hurt if your lap belt is too loose. In a crash, you could slide under the lap belt and apply force on your abdomen. This could cause serious or even fatal injuries. The lap belt should be worn low and snug on the hips, just touching the thighs.

Downloaded from www.Manualslib.com manuals search engine

Q: **What is wrong with this?**

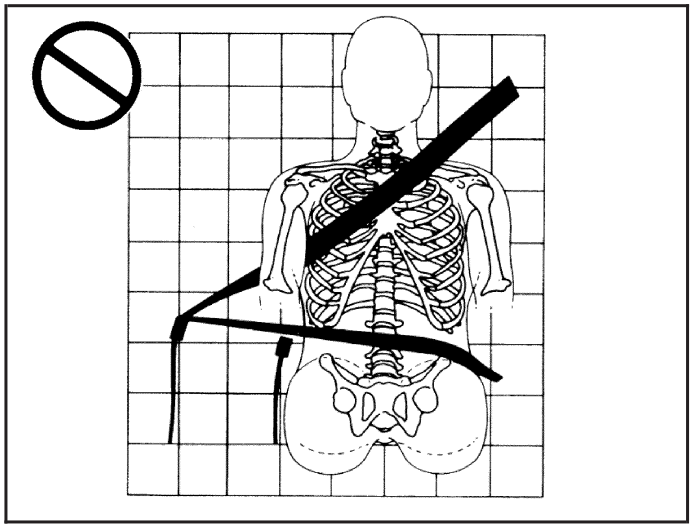

A: The belt is buckled in the wrong place.

⚠ CAUTION:

You can be seriously injured if your belt is buckled in the wrong place like this. In a crash, the belt would go up over your abdomen. The belt forces would be there, not on the pelvic bones. This could cause serious internal injuries. Always buckle your belt into the buckle nearest you.

Downloaded from www.Manualslib.com manuals search engine

Q: What is wrong with this?

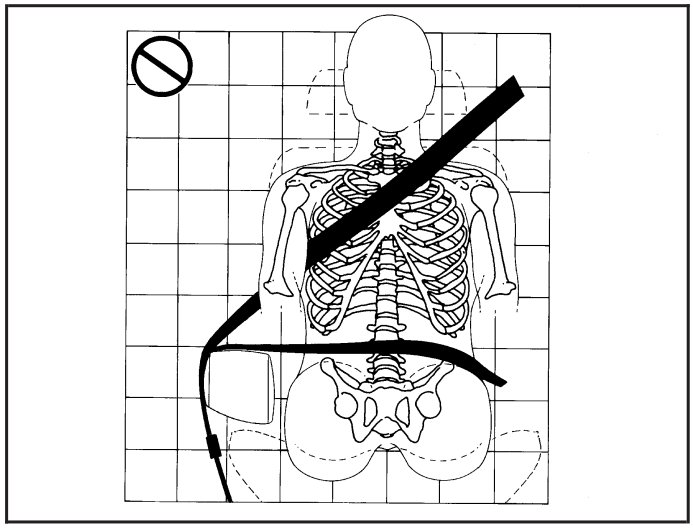

A: The belt is over an armrest.

⚠ CAUTION:

You can be seriously injured if your belt goes over an armrest like this. The belt would be much too high. In a crash, you can slide under the belt. The belt force would then be applied on the abdomen, not on the pelvic bones, and that could cause serious or fatal injuries. Be sure the belt goes under the armrests.

Downloaded from www.Manualslib.com manuals search engine

Q: What is wrong with this?

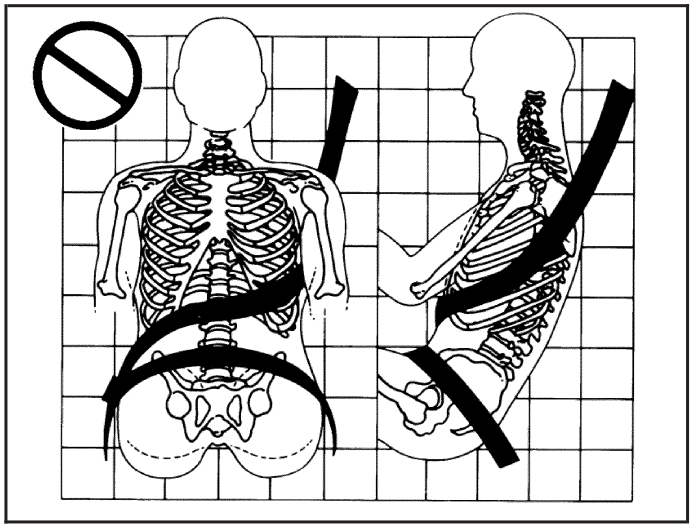

A: The shoulder belt is worn under the arm.
It should be worn over the shoulder at all times.

⚠ CAUTION:

You can be seriously injured if you wear the shoulder belt under your arm. In a crash, your body would move too far forward, which would increase the chance of head and neck injury. Also, the belt would apply too much force to the ribs, which are not as strong as shoulder bones. You could also severely injure internal organs like your liver or spleen. The shoulder belt should go over the shoulder and across the chest.

Downloaded from www.Manualslib.com manuals search engine

Q: What is wrong with this?

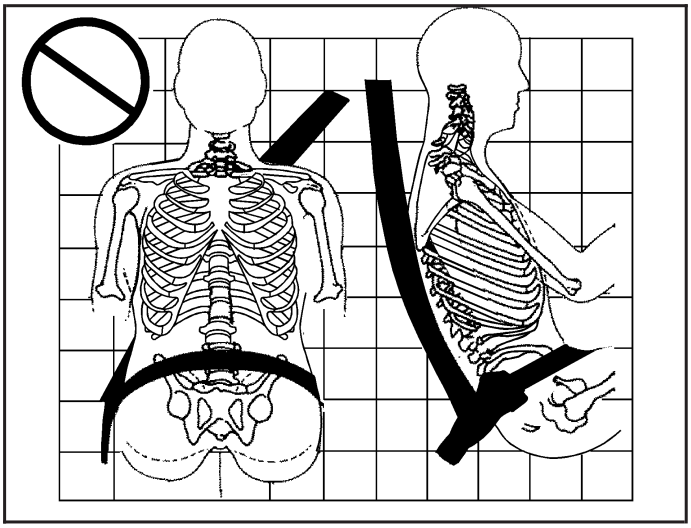

A: The belt is behind the body.

⚠ CAUTION:

You can be seriously injured by not wearing the lap-shoulder belt properly. In a crash, you would not be restrained by the shoulder belt. Your body could move too far forward increasing the chance of head and neck injury. You might also slide under the lap belt. The belt force would then be applied right on the abdomen. That could cause serious or fatal injuries. The shoulder belt should go over the shoulder and across the chest.

Downloaded from www.Manualslib.com manuals search engine

Q: What is wrong with this?

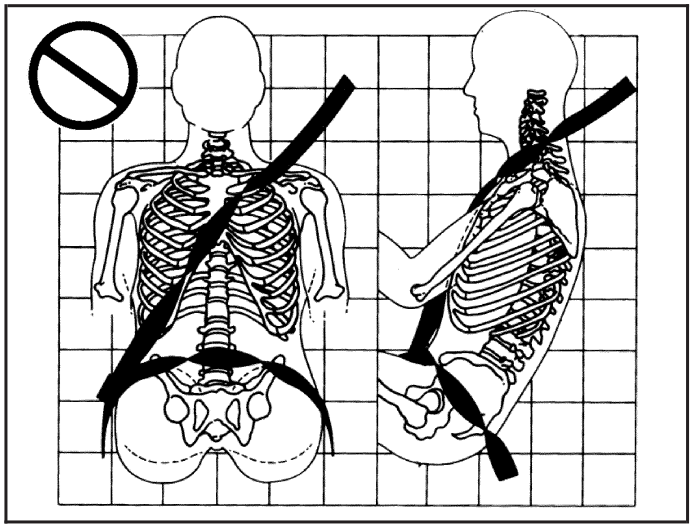

A: The belt is twisted across the body.

⚠ CAUTION:

You can be seriously injured by a twisted belt. In a crash, you would not have the full width of the belt to spread impact forces. If a belt is twisted, make it straight so it can work properly, or ask your dealer/retailer to fix it.

Downloaded from www.Manualslib.com manuals search engine

Lap-Shoulder Belt

All seating positions in your vehicle have a lap-shoulder belt.

Here is how to wear a lap-shoulder belt properly.

1. Adjust the seat, if the seat is adjustable, so you can sit up straight. To see how, see “Seats” in the Index.
2. Pick up the latch plate and pull the belt across you. Do not let it get twisted.

   The lap-shoulder belt may lock if you pull the belt across you very quickly. If this happens, let the belt go back slightly to unlock it. Then pull the belt across you more slowly.

   If you ever pull the shoulder portion of a passenger belt out all the way, you may engage the child restraint locking feature. If this happens, just let the belt go back all the way and start again.

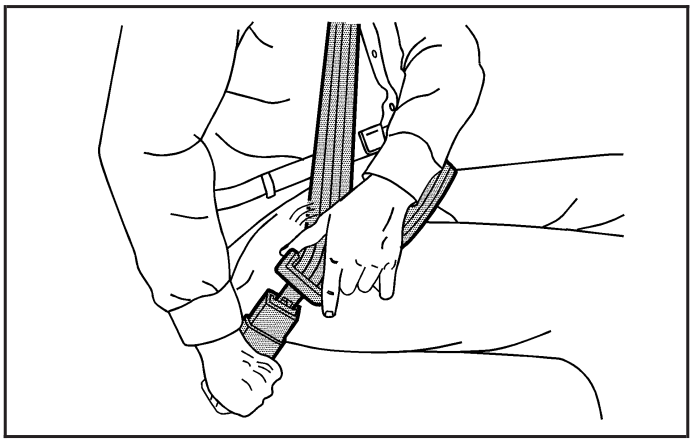

3. Push the latch plate into the buckle until it clicks.

   If you find that the latch plate will not go fully into the buckle, see if you are using the correct buckle.

   Pull up on the latch plate to make sure it is secure. If the belt is not long enough, see *Safety Belt Extender on page 1-26*.

   Make sure the release button on the buckle is positioned so you would be able to unbuckle the safety belt quickly if necessary.

Downloaded from www.Manualslib.com manuals search engine

4. If equipped with a shoulder belt height adjuster, move it to the height that is right for you. Improper shoulder belt height adjustment could reduce the effectiveness of the safety belt in a crash. See “Shoulder Belt Height Adjustment” later in this section.

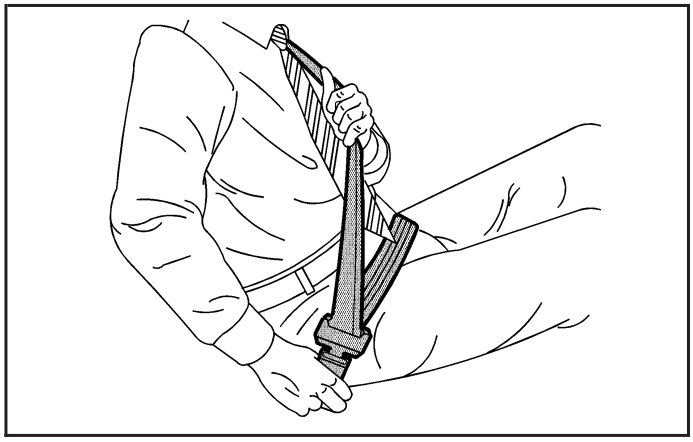

5. To make the lap part tight, pull up on the shoulder belt.

   It may be necessary to pull stitching on the safety belt through the latch plate to fully tighten the lap belt on smaller occupants.

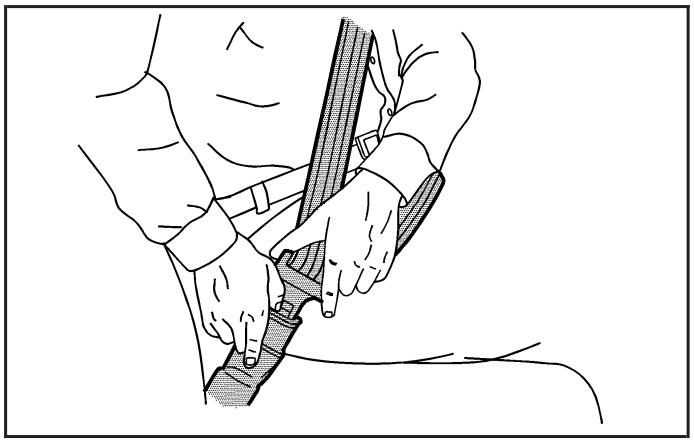

To unlatch the belt, push the button on the buckle. The belt should go back out of the way.

Before you close a door, be sure the belt is out of the way. If you slam the door on it, you can damage both the belt and your vehicle.

Downloaded from www.Manualslib.com manuals search engine

Shoulder Belt Height Adjuster

Your vehicle has a shoulder belt height adjuster for the driver and right front passenger.

Adjust the height so that the shoulder portion of the belt is centered on your shoulder. The belt should be away from your face and neck, but not falling off your shoulder. Improper shoulder belt height adjustment could reduce the effectiveness of the safety belt in a crash.

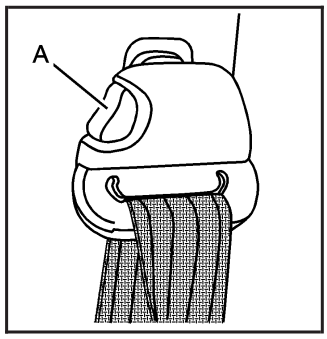

To move it down, squeeze the button (A) and move the height adjuster to the desired position. You can move the height adjuster up just by pushing up on the shoulder belt guide.

After you move the height adjuster to where you want it, try to move it down without squeezing the release button to make sure it has locked into position.

Safety Belt Pretensioners

Your vehicle has safety belt pretensioners for front outboard occupants. Although you cannot see them, they are part of the safety belt assembly. They can help tighten the safety belts during the early stages of a moderate to severe frontal or near frontal crash if the threshold conditions for pretensioner activation are met.

If the passenger sensing system detects that there is not a passenger in the right front passenger position, the safety belt pretensioner for that position will not activate. See *Passenger Sensing System on page 1-59*.

Pretensioners work only once. If they activate in a crash, you will need to get new ones, and probably other new parts for your safety belt system. See *Replacing Restraint System Parts After a Crash on page 1-67*.

Downloaded from www.Manualslib.com manuals search engine

Safety Belt Use During Pregnancy

Safety belts work for everyone, including pregnant women. Like all occupants, they are more likely to be seriously injured if they do not wear safety belts.

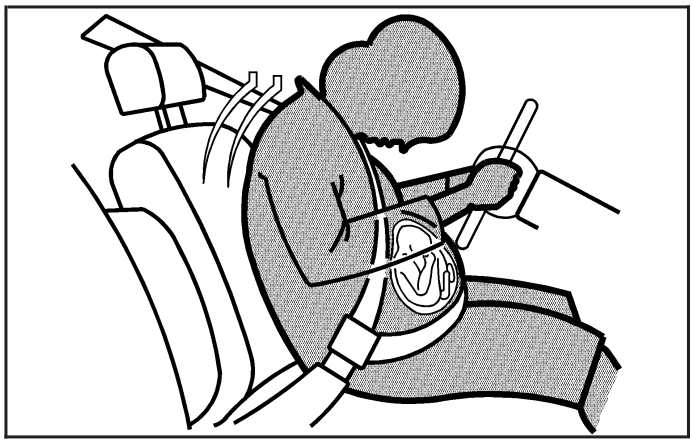

A pregnant woman should wear a lap-shoulder belt, and the lap portion should be worn as low as possible, below the rounding, throughout the pregnancy.

The best way to protect the fetus is to protect the mother. When a safety belt is worn properly, it is more likely that the fetus will not be hurt in a crash. For pregnant women, as for anyone, the key to making safety belts effective is wearing them properly.

Safety Belt Extender

If the vehicle's safety belt will fasten around you, you should use it.

But if a safety belt is not long enough, your dealer/retailer will order you an extender. When you go in to order it, take the heaviest coat you will wear, so the extender will be long enough for you. To help avoid personal injury, do not let someone else use it, and use it only for the seat it is made to fit. The extender has been designed for adults. Never use it for securing child seats. To wear it, just attach it to the regular safety belt. For more information, see the instruction sheet that comes with the extender.

Always disconnect the extender from the safety belt after you use it so that the airbag will work properly the next time someone uses that seat.

When you use a safety belt extender in the right front passenger's seat, make sure the passenger airbag status indicator shows "ON." See *Passenger Airbag Status Indicator on page 3-30*. If the indicator shows "OFF," disconnect the extender's latch from the buckle then reconnect the safety belt. Make sure the indicator light shows "ON", then reconnect the safety belt extender. If you use the safety belt extender while the indicator light shows "OFF," the right front passenger's frontal and seat-mounted side impact airbags (if equipped) may not activate correctly. See *Airbag System on page 1-50* for important safety information about your airbags.

Downloaded from www.Manualslib.com manuals search engine

Child Restraints

Older Children

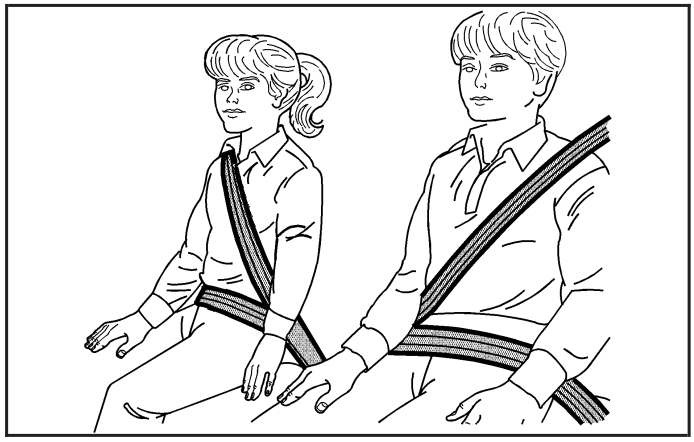

Older children who have outgrown booster seats should wear the vehicle's safety belts.

The manufacturer's instructions that come with the booster seat, state the weight and height limitations for that booster. Use a booster seat with a lap-shoulder belt until the child passes the below fit test:

- Sit all the way back on the seat. Do the knees bend at the seat edge? If yes, continue. If no, return to the booster seat.
- Buckle the lap-shoulder belt. Does the shoulder belt rest on the shoulder? If yes, continue. If no, then return to the booster seat.
- Does the lap belt fit low and snug on the hips, touching the thighs? If yes, continue. If no, return to the booster seat.
- Can proper safety belt fit be maintained for the length of the trip? If yes, continue. If no, return to the booster seat.

Downloaded from www.Manualslib.com manuals search engine

Q: What is the proper way to wear safety belts?

A: An older child should wear a lap-shoulder belt and get the additional restraint a shoulder belt can provide. The shoulder belt should not cross the face or neck. The lap belt should fit snugly below the hips, just touching the top of the thighs. This applies belt force to the child's pelvic bones in a crash. It should never be worn over the abdomen, which could cause severe or even fatal internal injuries in a crash.

According to accident statistics, children and infants are safer when properly restrained in the rear seating positions than in the front seating positions.

In a crash, children who are not buckled up can strike other people who are buckled up, or can be thrown out of the vehicle. Older children need to use safety belts properly.

⚠ CAUTION:

Never do this.

Here two children are wearing the same belt. The belt cannot properly spread the impact forces. In a crash, the two children can be crushed together and seriously injured. A belt must be used by only one person at a time.

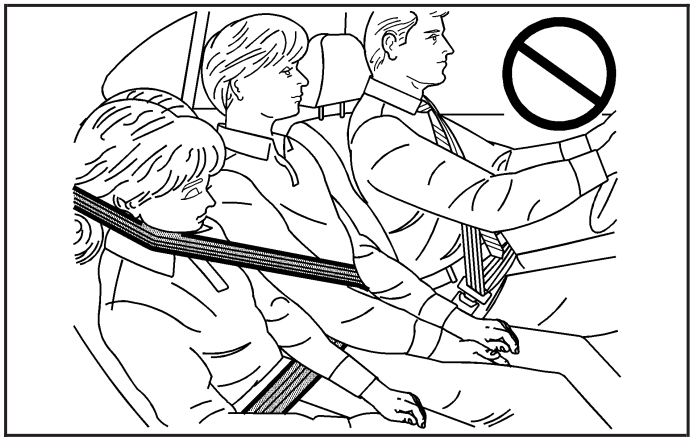

Downloaded from www.Manualslib.com manuals search engine

⚠ CAUTION:

Never do this.

Here a child is sitting in a seat that has a lap-shoulder belt, but the shoulder part is behind the child. In a crash, the child would not be restrained by the shoulder belt. The child might slide under the lap belt. The belt force would then be applied right on the abdomen. That could cause serious or fatal injuries. The child could also move too far forward increasing the chance of head and neck injury. The shoulder belt should go over the shoulder and across the chest.

Downloaded from www.Manualslib.com manuals search engine

Infants and Young Children

Everyone in a vehicle needs protection! This includes infants and all other children. Neither the distance traveled nor the age and size of the traveler changes the need, for everyone, to use safety restraints. In fact, the law in every state in the United States and in every Canadian province says children up to some age must be restrained while in a vehicle.

⚠ CAUTION:

Children can be seriously injured or strangled if a shoulder belt is wrapped around their neck and the safety belt continues to tighten. Never leave children unattended in a vehicle and never allow children to play with the safety belts.

Every time infants and young children ride in vehicles, they should have the protection provided by appropriate restraints. Children who are not restrained properly can strike other people, or can be thrown out of the vehicle. In addition, young children should not use the vehicle's adult safety belts alone; they need to use a child restraint.

⚠ CAUTION:

People should never hold an infant in their arms while riding in a vehicle. An infant does not weigh much — until a crash. During a crash an infant will become so heavy it is not possible to hold it. For example, in a crash at only 25 mph (40 km/h), a 12 lb (5.5 kg) infant will suddenly become a 240 lb (110 kg) force on a person's arms. An infant should be secured in an appropriate restraint.

Downloaded from www.Manualslib.com manuals search engine

⚠ CAUTION:

Children who are up against, or very close to, any airbag when it inflates can be seriously injured or killed. Airbags plus lap-shoulder belts offer protection for adults and older children, but not for young children and infants. Neither the vehicle's safety belt system nor its airbag system is designed for them. Young children and infants need the protection that a child restraint system can provide.

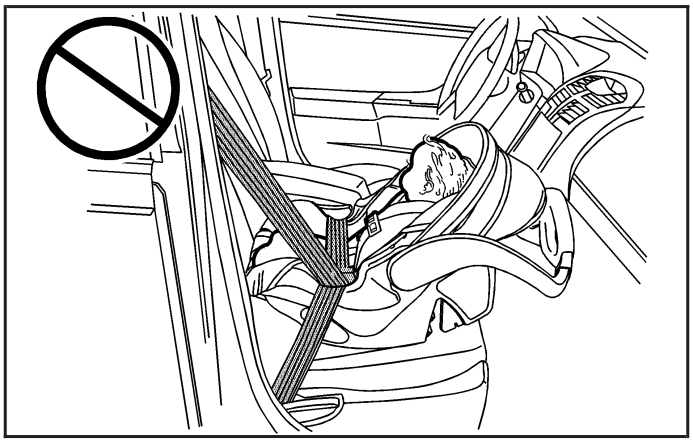

Downloaded from www.Manualslib.com manuals search engine

Q: What are the different types of add-on child restraints?

A: Add-on child restraints, which are purchased by the vehicle's owner, are available in four basic types. Selection of a particular restraint should take into consideration not only the child's weight, height, and age but also whether or not the restraint will be compatible with the motor vehicle in which it will be used.

For most basic types of child restraints, there are many different models available. When purchasing a child restraint, be sure it is designed to be used in a motor vehicle. If it is, the restraint will have a label saying that it meets federal motor vehicle safety standards.

The restraint manufacturer's instructions that come with the restraint state the weight and height limitations for a particular child restraint. In addition, there are many kinds of restraints available for children with special needs.

⚠ CAUTION:

Newborn infants need complete support, including support for the head and neck. This is necessary because a newborn infant's neck is weak and its head weighs so much compared with the rest of its body. In a crash, an infant in a rear-facing seat settles into the restraint, so the crash forces can be distributed across the strongest part of an infant's body, the back and shoulders. Infants should always be secured in appropriate infant restraints.

Downloaded from www.Manualslib.com manuals search engine

⚠ CAUTION:

The body structure of a young child is quite unlike that of an adult or older child, for whom the safety belts are designed. A young child's hip bones are still so small that the vehicle's regular safety belt may not remain low on the hip bones, as it should. Instead, it may settle up around the child's abdomen. In a crash, the belt would apply force on a body area that is unprotected by any bony structure. This alone could cause serious or fatal injuries. Young children should always be secured in appropriate child restraints.

Child Restraint Systems

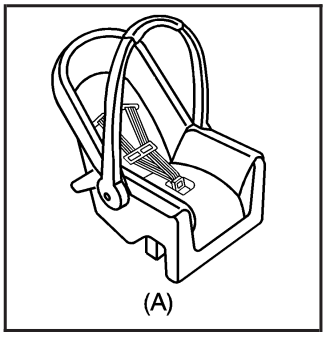

A rear-facing infant seat (A) provides restraint with the seating surface against the back of the infant.

The harness system holds the infant in place and, in a crash, acts to keep the infant positioned in the restraint.

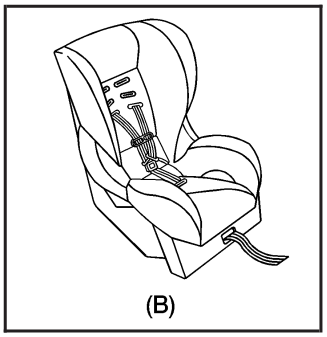

A forward-facing child seat (B) provides restraint for the child's body with the harness.

Downloaded from www.Manualslib.com manuals search engine

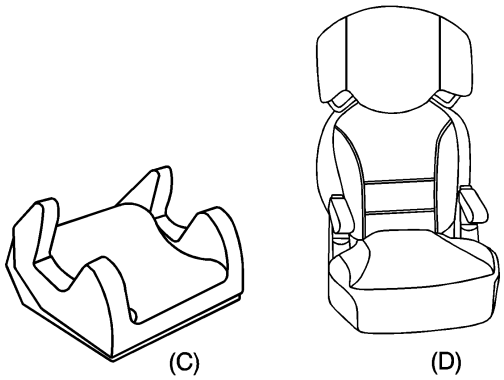

A booster seat (C-D) is a child restraint designed to improve the fit of the vehicle's safety belt system. A booster seat can also help a child to see out the window.

Securing an Add-On Child Restraint in the Vehicle

⚠ CAUTION:

A child can be seriously injured or killed in a crash if the child restraint is not properly secured in the vehicle. Make sure the child restraint is properly installed in the vehicle using the vehicle's safety belt or LATCH system, following the instructions that came with that restraint, and also the instructions in this manual.

Downloaded from www.Manualslib.com manuals search engine

To help reduce the chance of injury, the child restraint must be secured in the vehicle. Child restraint systems must be secured in vehicle seats by lap belts or the lap belt portion of a lap-shoulder belt, or by the LATCH system. See *Lower Anchors and Tethers for Children (LATCH) on page 1-37* for more information. A child can be endangered in a crash if the child restraint is not properly secured in the vehicle.

When securing an add-on child restraint, refer to the instructions that come with the restraint which may be on the restraint itself or in a booklet, or both, and to this manual. The child restraint instructions are important, so if they are not available, obtain a replacement copy from the manufacturer.

Keep in mind that an unsecured child restraint can move around in a collision or sudden stop and injure people in the vehicle. Be sure to properly secure any child restraint in your vehicle — even when no child is in it.

Securing the Child Within the Child Restraint

⚠ CAUTION:

A child can be seriously injured or killed in a crash if the child is not properly secured in the child restraint. Because there are different systems, it is important to refer to the instructions that come with the restraint. Make sure the child is properly secured, following the instructions that came with that restraint.

Downloaded from www.Manualslib.com manuals search engine

Where to Put the Restraint

Accident statistics show that children are safer if they are restrained in the rear rather than the front seat.

We recommend that children and child restraints be secured in a rear seat, including: an infant or a child riding in a rear-facing child restraint; a child riding in a forward-facing child seat; an older child riding in a booster seat; and children, who are large enough, using safety belts.

A label on your sun visor says, “Never put a rear-facing child seat in the front.” This is because the risk to the rear-facing child is so great, if the airbag deploys.

⚠ CAUTION:

A child in a rear-facing child restraint can be seriously injured or killed if the right front passenger’s airbag inflates. This is because the back of the rear-facing child restraint would be very close to the inflating airbag.

Even though the passenger sensing system is designed to turn off the right front passenger’s frontal airbag if the system detects a rear-facing child restraint, no system is fail-safe, and no one can guarantee that an airbag will not deploy under some unusual circumstance, even though it is turned off. We recommend that rear-facing child restraints be secured in a rear seat, even if the airbag is off.

If you secure a forward-facing child restraint in the right front seat, always move the front passenger seat as far back as it will go. It is better to secure the child restraint in a rear seat.

See *Passenger Sensing System on page 1-59* for additional information.

Downloaded from www.Manualslib.com manuals search engine

When securing a child restraint in a rear seating position, study the instructions that came with your child restraint to make sure it is compatible with this vehicle.

Wherever you install a child restraint, be sure to secure the child restraint properly.

Keep in mind that an unsecured child restraint can move around in a collision or sudden stop and injure people in the vehicle. Be sure to properly secure any child restraint in your vehicle — even when no child is in it.

Lower Anchors and Tethers for Children (LATCH)

The LATCH system holds a child restraint during driving or in a crash. This system is designed to make installation of a child restraint easier. The LATCH system uses anchors in the vehicle and attachments on the child restraint that are made for use with the LATCH system.

Make sure that a LATCH-compatible child restraint is properly installed using the anchors, or use the vehicle's safety belts to secure the restraint, following the instructions that came with that restraint, and also the instructions in this manual. When installing a child restraint with a top tether, you must also use either the lower anchors or the safety belts to properly secure the child restraint. A child restraint must never be installed using only the top tether and anchor.

In order to use the LATCH system in your vehicle, you need a child restraint has LATCH attachments. The child restraint manufacturer will provide you with instructions on how to use the child restraint and its attachments. The following explains how to attach a child restraint with these attachments in your vehicle.

Not all vehicle seating positions or child restraints have lower anchors and attachments or top tether anchors and attachments.

Downloaded from www.Manualslib.com manuals search engine

Lower Anchors

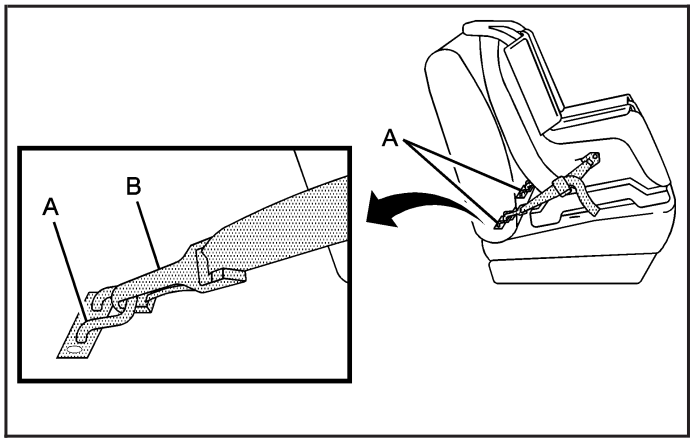

Lower anchors (A) are metal bars built into the vehicle. There are two lower anchors for each LATCH seating position that will accommodate a child restraint with lower attachments (B).

Top Tether Anchor

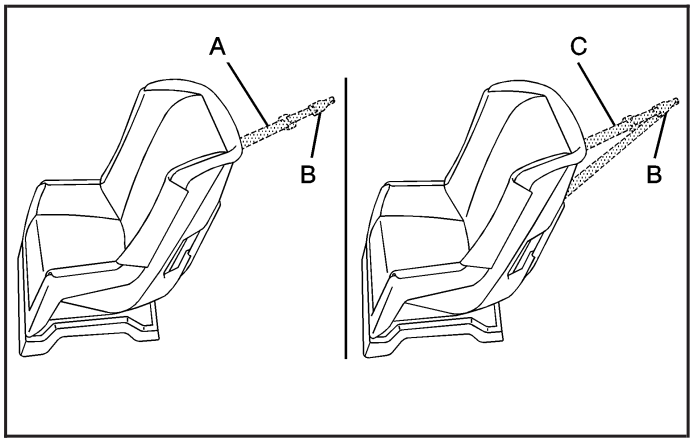

A top tether (A, C) anchors the top of the child restraint to the vehicle. A top tether anchor is built into the vehicle. The top tether attachment (B) on the child restraint connects to the top tether anchor in the vehicle in order to reduce the forward movement and rotation of the child restraint during driving or in a crash.

Downloaded from www.Manualslib.com manuals search engine

Your child restraint may have a single tether (A) or a dual tether (C). Either will have a single attachment (B) to secure the top tether to the anchor.

Some child restraints with top tethers are designed for use with or without the top tether being attached. Others require the top tether always to be attached. In Canada, the law requires that forward-facing child restraints have a top tether, and that the tether be attached. Be sure to read and follow the instructions for your child restraint.

If the child restraint does not have a top tether, one can be obtained, in kit form, for many child restraints. Ask the child restraint manufacturer whether or not a kit is available.

Lower Anchor and Top Tether Anchor Locations

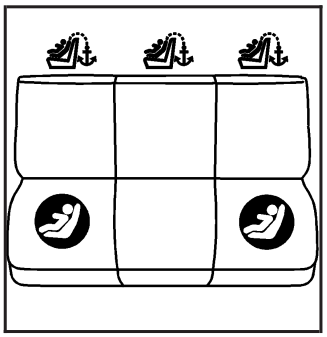

Rear Seat

(Top Tether Anchor): Seating positions with top tether anchors.

(Lower Anchor): Seating positions with two lower anchors.

To assist you in locating the lower anchors, each seating position with lower anchors has two labels, near the crease between the seatback and the seat cushion.

Downloaded from www.Manualslib.com manuals search engine

To assist you in locating the top tether anchors, the top tether anchor symbol is located on the cover.

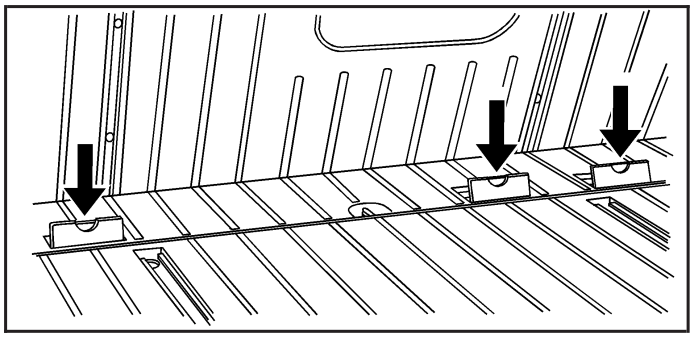

The top tether anchors are located on the floor of the rear cargo area. Open the cover to access the anchors. You may have to fold back the cargo mat to access the top tether anchors. Be sure to use an anchor located on the same side of the vehicle as the seating position where the child restraint will be placed.

Do not secure a child restraint in a position without a top tether anchor if a national or local law requires that the top tether be attached, or if the instructions that come with the child restraint say that the top tether must be attached.

Accident statistics show that children are safer if they are restrained in the rear rather than the front seat. See *Where to Put the Restraint on page 1-36* for additional information.

Downloaded from www.Manualslib.com manuals search engine

Securing a Child Restraint Designed for the LATCH System

⚠ CAUTION:

If a LATCH-type child restraint is not attached to anchors, the restraint will not be able to protect the child correctly. In a crash, the child could be seriously injured or killed. Make sure that a LATCH-type child restraint is properly installed using the anchors, or use the vehicle's safety belts to secure the restraint, following the instructions that came with that restraint, and also the instructions in this manual.

⚠ CAUTION:

Each top tether anchor and lower anchor in the vehicle is designed to hold only one child restraint. Attaching more than one child restraint to a single anchor could cause the anchor or attachment to come loose or even break during a crash. A child or others could be injured if this happens. To help prevent injury to people and damage to your vehicle, attach only one child restraint per anchor.

Downloaded from www.Manualslib.com manuals search engine

⚠ CAUTION:

Children can be seriously injured or strangled if a shoulder belt is wrapped around their neck and the safety belt continues to tighten. Secure any unused safety belts behind the child restraint so children cannot reach them. Pull the shoulder belt all the way out of the retractor to set the lock, if your vehicle has one, after the child restraint has been installed. Be sure to follow the instructions of the child restraint manufacturer.

Notice: **Contact between the child restraint LATCH attachment parts and the vehicle's safety belt assembly may cause damage to these parts. Make sure when securing unused safety belts behind the child restraint that there is no contact between the child restraint LATCH attachment parts and the vehicle's safety belt assembly.**

Folding an empty rear seat with the safety belts secured may cause damage to the safety belt or the seat. When removing the child restraint, always remember to return the safety belts to their normal, stowed position before folding the rear seat.

1. Attach and tighten the lower attachments to the lower anchors. If the child restraint does not have lower attachments or the desired seating position does not have lower anchors, secure the child restraint with the top tether and the safety belts. Refer to your child restraint manufacturer instructions and the instructions in this manual.
   - 1.1. Find the lower anchors for the desired seating position.
   - 1.2. Put the child restraint on the seat.
   - 1.3. Attach and tighten the lower attachments on the child restraint to the lower anchors.

Downloaded from www.Manualslib.com manuals search engine

2. If the child restraint manufacturer recommends that the top tether be attached, attach and tighten the top tether to the top tether anchor, if equipped. Refer to the child restraint instructions and the following steps:
   2.1. Find the top tether anchor.
   2.2. You may have to fold back the cargo mat to access the top tether anchors.
   2.3. Open the top tether anchor cover to expose the anchor.
   2.4. Route, attach, and tighten the top tether according to your child restraint instructions and the following instructions:

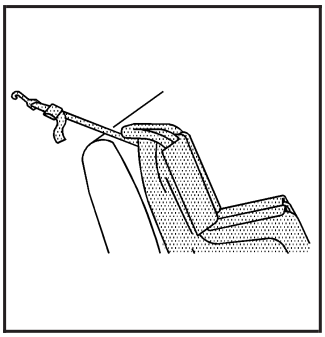

If the position you are using does not have a head restraint and you are using a single tether, route the tether over the seatback.

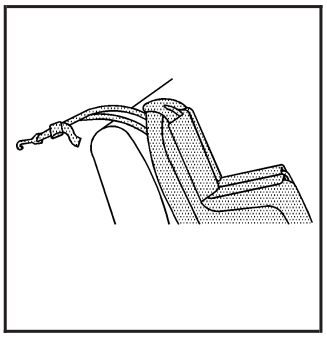

If the position you are using does not have a headrest or head restraint and you are using a dual tether, route the tether over the seatback.

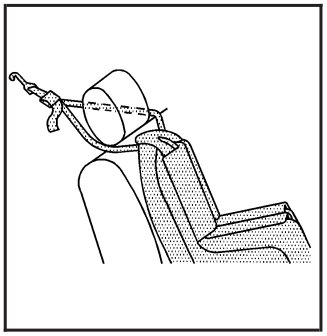

If the position you are using has an adjustable headrest or head restraint and you are using a dual tether, route the tether around the headrest or head restraint.

Downloaded from www.Manualslib.com manuals search engine

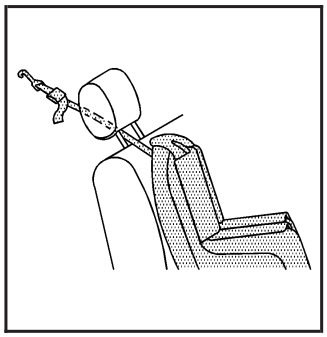

If the position you are using has an adjustable headrest or head restraint and you are using a single tether, raise the headrest or head restraint and route the tether under the headrest or head restraint and in between the headrest or head restraint posts.

3. Push and pull the child restraint in different directions to be sure it is secure.

Securing a Child Restraint in a Rear Seat Position

When securing a child restraint in a rear seating position, study the instructions that came with your child restraint to make sure it is compatible with this vehicle.

If your child restraint has the LATCH system, see *Lower Anchors and Tethers for Children (LATCH) on page 1-37* for how to install your child restraint using LATCH. If you secure a child restraint using a safety belt and it uses a top tether, see *Lower Anchors and Tethers for Children (LATCH) on page 1-37* for top tether anchor locations.

Do not secure a child seat in a position without a top tether anchor if a national or local law requires that the top tether be anchored, or if the instructions that come with the child restraint say that the top strap must be anchored.

If your child restraint does not have the LATCH system, you will be using the safety belt to secure the child restraint in this position. Be sure to follow the instructions that came with the child restraint. Secure the child in the child restraint when and as the instructions say.

Downloaded from www.Manualslib.com manuals search engine

If you need to install more than one child restraint in the rear seat, be sure to read *Where to Put the Restraint on page 1-36*.

1. Put the child restraint on the seat.
2. Pick up the latch plate, and run the lap and shoulder portions of the vehicle's safety belt through or around the restraint. The child restraint instructions will show you how.

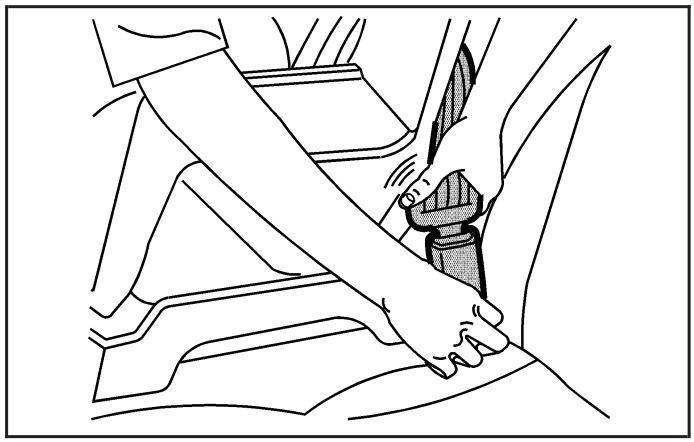

3. Push the latch plate into the buckle until it clicks.

   If you find that the latch plate will not go fully into the buckle, see if you are using the correct buckle.

   Make sure the release button is positioned so you would be able to unbuckle the safety belt quickly if necessary.

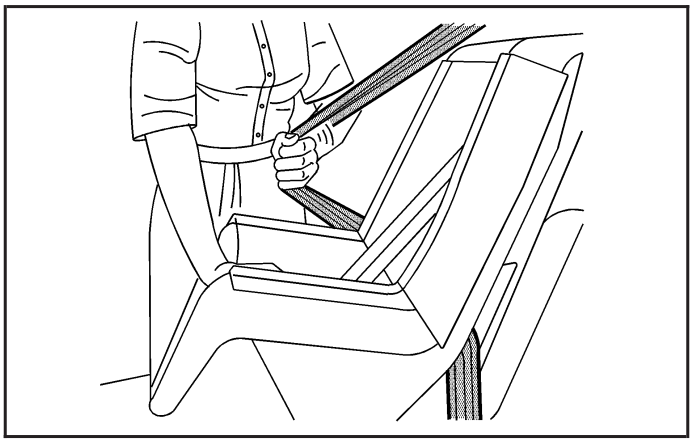

4. Pull the rest of the shoulder belt all the way out of the retractor to set the lock.

Downloaded from www.Manualslib.com manuals search engine

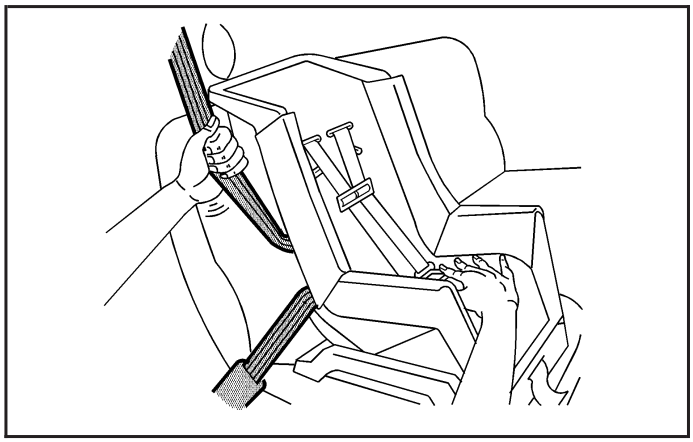

5. To tighten the belt, push down on the child restraint, pull the shoulder portion of the belt to tighten the lap portion of the belt and feed the shoulder belt back into the retractor. If you are using a forward-facing child restraint, you may find it helpful to use your knee to push down on the child restraint as you tighten the belt.
6. If your child restraint has a top tether, follow the child restraint manufacturer's instructions regarding the use of the top tether. See *Lower Anchors and Tethers for Children (LATCH) on page 1-37*.
7. Push and pull the child restraint in different directions to be sure it is secure.

To remove the child restraint, unbuckle the vehicle's safety belt and let it go back all the way. If the top tether is attached to a top tether anchor, disconnect it.

Securing a Child Restraint in the Right Front Seat Position

Your vehicle has airbags. A rear seat is a safer place to secure a forward-facing child restraint. See *Where to Put the Restraint on page 1-36*.

In addition, your vehicle has a passenger sensing system which is designed to turn off the right front passenger's frontal airbag and seat-mounted side impact airbag (if equipped) under certain conditions. See *Passenger Sensing System on page 1-59* and *Passenger Airbag Status Indicator on page 3-30* for more information on this, including important safety information.

A label on your sun visor says, "Never put a rear-facing child seat in the front." This is because the risk to the rear-facing child is so great, if the airbag deploys.

Downloaded from www.Manualslib.com manuals search engine

⚠ CAUTION:

A child in a rear-facing child restraint can be seriously injured or killed if the right front passenger's airbag inflates. This is because the back of the rear-facing child restraint would be very close to the inflating airbag.

Even though the passenger sensing system is designed to turn off the right front passenger's frontal airbag if the system detects a rear-facing child restraint, no system is fail-safe, and no one can guarantee that an airbag will not deploy under some unusual circumstance, even though it is turned off. We recommend that rear-facing child restraints be secured in a rear seat, even if the airbag is off.

If you secure a forward-facing child restraint in the right front seat, always move the front passenger seat as far back as it will go. It is better to secure the child restraint in a rear seat.

See *Passenger Sensing System on page 1-59* for additional information.

If your child restraint has the LATCH system, see *Lower Anchors and Tethers for Children (LATCH) on page 1-37* for how to install your child restraint using LATCH. If you secure a child restraint using a safety belt and it uses a top tether, see *Lower Anchors and Tethers for Children (LATCH) on page 1-37* for top tether anchor locations.

Do not secure a child seat in a position without a top tether anchor if a national or local law requires that the top tether be anchored, or if the instructions that come with the child restraint say that the top strap must be anchored.

In Canada, the law requires that forward-facing child restraints have a top tether, and that the tether be attached.

You will be using the lap-shoulder belt to secure the child restraint in this position. Follow the instructions that came with the child restraint.

1. Move the seat as far back as it will go before securing the forward-facing child restraint.

   When the passenger sensing system has turned off the right front passenger's frontal airbag and seat-mounted side impact airbag (if equipped), the off indicator on the passenger airbag status indicator should light and stay lit when you start the vehicle. See *Passenger Airbag Status Indicator on page 3-30*.

Downloaded from www.Manualslib.com manuals search engine

2. Put the child restraint on the seat.
3. Pick up the latch plate, and run the lap and shoulder portions of the vehicle's safety belt through or around the restraint. The child restraint instructions will show you how.

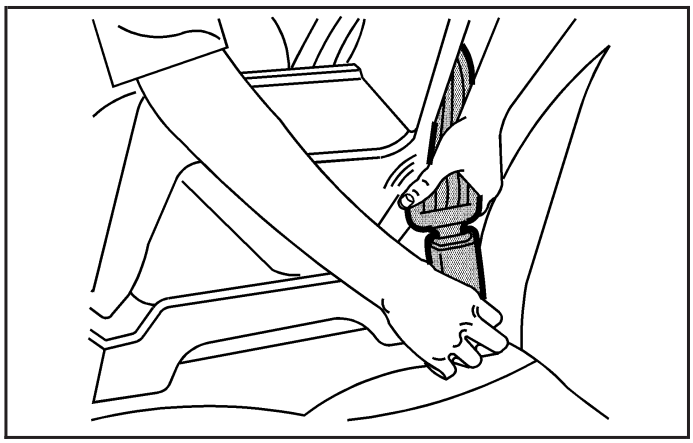

4. Push the latch plate into the buckle until it clicks.

   Make sure the release button is positioned so you would be able to unbuckle the safety belt quickly if necessary.

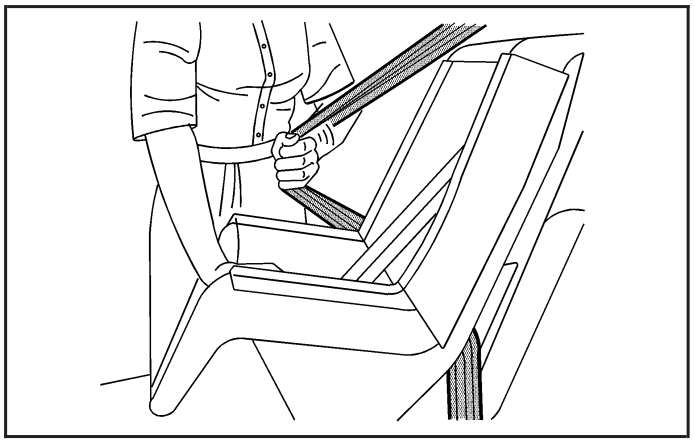

5. Pull the rest of the shoulder belt all the way out of the retractor to set the lock.

Downloaded from www.Manualslib.com manuals search engine

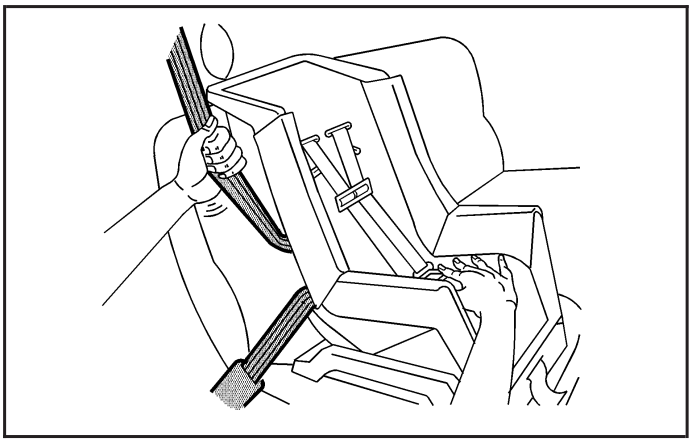

6. To tighten the belt, push down on the child restraint, pull the shoulder portion of the belt to tighten the lap portion of the belt and feed the shoulder belt back into the retractor. If you are using a forward-facing child restraint, you may find it helpful to use your knee to push down on the child restraint as you tighten the belt.
7. Push and pull the child restraint in different directions to be sure it is secure.

If the airbag or airbags are off, the off indicator in the passenger airbag status indicator will come on and stay on when the vehicle is started.

If a child restraint has been installed and the on indicator is lit, turn the vehicle off. Remove the child restraint from the vehicle and reinstall the child restraint with the ignition key in the ACC (Accessory) or LOCK position.

If, after reinstalling the child restraint and restarting the vehicle, the on indicator is still lit, check to make sure that the vehicle's seatback is not pressing the child restraint into the seat cushion. If this happens, slightly recline the vehicle's seatback and adjust the seat cushion if possible. Also make sure the child restraint is not trapped under the vehicle head restraint. If this happens, adjust the head restraint.

Remove any additional material from the seat such as blankets, cushions, seat covers, seat heaters or seat massagers before reinstalling or securing the child restraint.

If the on indicator is still lit, secure the child in the child restraint in a rear seat position in the vehicle and check with your dealer/retailer.

To remove the child restraint, unbuckle the vehicle's safety belt and let it go back all the way.

Downloaded from www.Manualslib.com manuals search engine

Airbag System

Your vehicle has the following airbags:

- A frontal airbag for the driver.
- A frontal airbag for the right front passenger.

Your vehicle may have the following airbags:

- A seat-mounted side impact airbag for the driver.
- A seat-mounted side impact airbag for the right front passenger.
- A roof-rail airbag for the driver and the passenger seated directly behind the driver.
- A roof-rail airbag for the right front passenger and the passenger seated directly behind the right front passenger.

All of the airbags in your vehicle will have the word AIRBAG embossed in the trim or on an attached label near the deployment opening.

For frontal airbags, the word AIRBAG will appear on the middle part of the steering wheel for the driver and on the instrument panel for the right front passenger.

With seat-mounted side impact airbags, the word AIRBAG will appear on the side of the seatback closest to the door.

With roof-rail airbags, the word AIRBAG will appear along the headliner or trim.

Airbags are designed to supplement the protection provided by safety belts. Even though today's airbags are also designed to help reduce the risk of injury from the force of an inflating bag, all airbags must inflate very quickly to do their job.

Here are the most important things to know about the airbag system:

⚠ CAUTION:

You can be severely injured or killed in a crash if you are not wearing your safety belt — even if you have airbags. Wearing your safety belt during a crash helps reduce your chance of hitting things inside the vehicle or being ejected from it. Airbags are "supplemental restraints" to the safety belts. All airbags are designed to work with safety belts, but do not replace them.

Downloaded from www.Manualslib.com manuals search engine

⚠ CAUTION:

Frontal airbags are designed to deploy in moderate to severe frontal and near frontal crashes. They are not designed to inflate in rollover, rear crashes, or in many side crashes.

Seat-mounted side impact airbags and roof-rail airbags are designed to inflate in moderate to severe crashes where something hits the side of your vehicle. They are not designed to inflate in frontal, in rollover, or in rear crashes.

Everyone in your vehicle should wear a safety belt properly — whether or not there is an airbag for that person.

⚠ CAUTION:

Airbags inflate with great force, faster than the blink of an eye. Anyone who is up against, or very close to, any airbag when it inflates can be seriously injured or killed. Do not sit unnecessarily close to the airbag, as you would be if you were sitting on the edge of your seat or leaning forward. Safety belts help keep you in position before and during a crash. Always wear your safety belt, even with airbags. The driver should sit as far back as possible while still maintaining control of the vehicle.

Occupants should not lean on or sleep against the door or side windows in seating positions with seat-mounted side impact airbags and/or roof-rail airbags.

Downloaded from www.Manualslib.com manuals search engine

⚠ CAUTION:

Airbags plus lap-shoulder belts offer the best protection for adults, but not for young children and infants. Neither the vehicle's safety belt system nor its airbag system is designed for them. Young children and infants need the protection that a child restraint system can provide. Always secure children properly in your vehicle. To read how, see *Older Children on page 1-27* or *Infants and Young Children on page 1-30*.

There is an airbag readiness light on the instrument panel cluster, which shows the airbag symbol.

The system checks the airbag electrical system for malfunctions. The light tells you if there is an electrical problem. See *Airbag Readiness Light on page 3-29* for more information.

Where Are the Airbags?

The driver's frontal airbag is in the middle of the steering wheel.

Downloaded from www.Manualslib.com manuals search engine

The right front passenger's frontal airbag is in the instrument panel on the passenger's side.

Driver Side shown, Passenger Side similar

If your vehicle has seat-mounted side impact airbags for the driver and right front passenger, they are in the side of the seatbacks closest to the door.

Downloaded from www.Manualslib.com manuals search engine

Driver Side shown, Passenger Side similar

If your vehicle has roof-rail airbags for the driver, right front passenger, and second row outboard passengers, they are in the ceiling above the side windows.

⚠ CAUTION:

If something is between an occupant and an airbag, the airbag might not inflate properly or it might force the object into that person causing severe injury or even death. The path of an inflating airbag must be kept clear.
Do not put anything between an occupant and an airbag, and do not attach or put anything on the steering wheel hub or on or near any other airbag covering.

Do not use seat accessories that block the inflation path of a seat-mounted side impact airbag.

If your vehicle has roof-rail airbags, never secure anything to the roof of your vehicle by routing the rope or tie down through any door or window opening. If you do, the path of an inflating roof-rail airbag will be blocked.

Downloaded from www.Manualslib.com manuals search engine

When Should an Airbag Inflate?

Frontal airbags are designed to inflate in moderate to severe frontal or near-frontal crashes to help reduce the potential for severe injuries mainly to the driver's or right front passenger's head and chest. However, they are only designed to inflate if the impact exceeds a predetermined deployment threshold. Deployment thresholds are used to predict how severe a crash is likely to be in time for the airbags to inflate and help restrain the occupants.

Whether your frontal airbags will or should deploy is not based on how fast your vehicle is traveling. It depends largely on what you hit, the direction of the impact, and how quickly your vehicle slows down.

Frontal airbags may inflate at different vehicle crash speeds. For example:

- If the vehicle hits a stationary object, the airbags could inflate at a different crash speed than if the vehicle hits a moving object.
- If the vehicle hits an object that deforms, the airbags could inflate at a different crash speed than if the vehicle hits an object that does not deform.
- If the vehicle hits a narrow object (like a pole), the airbags could inflate at a different crash speed than if the vehicle hits a wide object (like a wall).
- If the vehicle goes into an object at an angle, the airbags could inflate at a different crash speed than if the vehicle goes straight into the object.

Thresholds can also vary with specific vehicle design.

Frontal airbags are not intended to inflate during vehicle rollovers, rear impacts, or in many side impacts.

Downloaded from www.Manualslib.com manuals search engine

Frontal airbags for the driver and right front passenger may also deploy if a serious impact occurs to the underside of your vehicle such as hitting a curb, falling into a deep hole, or landing hard.

In addition, your vehicle has dual-stage frontal airbags. Dual-stage airbags adjust the restraint according to crash severity. Your vehicle has electronic frontal sensors, which help the sensing system distinguish between a moderate frontal impact and a more severe frontal impact. For moderate frontal impacts, dual-stage airbags inflate at a level less than full deployment. For more severe frontal impacts, full deployment occurs.

Your vehicle may or may not have seat-mounted side impact and roof-rail airbags. See *Airbag System on page 1-50*. Seat-mounted side impact and roof-rail airbags are intended to inflate in moderate to severe side crashes. Seat-mounted side impact and roof-rail airbags will inflate if the crash severity is above the system's designed threshold level. Your vehicle has sensors which detect side impacts. These sensors signal the appropriate side impact airbag to inflate. The threshold level can vary with specific vehicle design.

Seat-mounted side impact and roof-rail airbags are not intended to inflate in frontal impacts, near-frontal impacts, rollovers, or rear impacts. A seat-mounted side impact airbag is intended to deploy on the side of the vehicle that is struck. A roof-rail airbag is intended to deploy on the side of the vehicle that is struck. It is possible that, in a crash involving the rear side of your vehicle, that only the roof-mounted airbag will deploy.

In any particular crash, no one can say whether an airbag should have inflated simply because of the damage to a vehicle or because of what the repair costs were. For frontal airbags, inflation is determined by what the vehicle hits, the angle of the impact, and how quickly the vehicle slows down. For seat-mounted side impact and roof-rail airbags, deployment is determined by the location and severity of the side impact.

Downloaded from www.Manualslib.com manuals search engine

What Makes an Airbag Inflate?

In a deployment event, the sensing system sends an electrical signal triggering a release of gas from the inflator. Gas from the inflator fills the airbag causing the bag to break out of the cover and deploy. The inflator, the airbag, and related hardware are all part of the airbag module.

Frontal airbag modules are located inside the steering wheel and instrument panel. For vehicles with seat-mounted side impact airbags, there are airbag modules in the side of the front seatbacks closest to the door. For vehicles with roof-rail airbags, there are airbag modules in the ceiling of the vehicle, near the side windows that have occupant seating positions.

How Does an Airbag Restrain?

In moderate to severe frontal or near frontal collisions, even belted occupants can contact the steering wheel or the instrument panel. In moderate to severe side collisions, even belted occupants can contact the inside of the vehicle.

Airbags supplement the protection provided by safety belts. Frontal airbags distribute the force of the impact more evenly over the occupant's upper body, stopping the occupant more gradually. Seat-mounted side impact and roof-rail airbags distribute the force of the impact more evenly over the occupant's upper body.

But airbags would not help in many types of collisions, primarily because the occupant's motion is not toward those airbags. See *When Should an Airbag Inflate? on page 1-55* for more information.

Airbags should never be regarded as anything more than a supplement to safety belts.

Downloaded from www.Manualslib.com manuals search engine

What Will You See After an Airbag Inflates?

After the frontal airbags and seat-mounted side impact airbags inflate, they quickly deflate, so quickly that some people may not even realize an airbag inflated. Roof-rail airbags may still be at least partially inflated for some time after they deploy. Some components of the airbag module may be hot for several minutes. For location of the airbag modules, see *What Makes an Airbag Inflate? on page 1-57*.

The parts of the airbag that come into contact with you may be warm, but not too hot to touch. There may be some smoke and dust coming from the vents in the deflated airbags. Airbag inflation does not prevent the driver from seeing out of the windshield or being able to steer the vehicle, nor does it prevent people from leaving the vehicle.

⚠ CAUTION:

When an airbag inflates, there may be dust in the air. This dust could cause breathing problems for people with a history of asthma or other breathing trouble. To avoid this, everyone in the vehicle should get out as soon as it is safe to do so. If you have breathing problems but cannot get out of the vehicle after an airbag inflates, then get fresh air by opening a window or a door. If you experience breathing problems following an airbag deployment, you should seek medical attention.

Your vehicle has a feature that may automatically unlock the doors, turn the interior lamps on, and turn the hazard warning flashers on when the airbags inflate. You can lock the doors, turn the interior lamps off, and turn the hazard warning flashers off by using the controls for those features.

Downloaded from www.Manualslib.com manuals search engine

In many crashes severe enough to inflate the airbag, windshields are broken by vehicle deformation. Additional windshield breakage may also occur from the right front passenger airbag.

- Airbags are designed to inflate only once. After an airbag inflates, you will need some new parts for the airbag system. If you do not get them, the airbag system will not be there to help protect you in another crash. A new system will include airbag modules and possibly other parts. The service manual for your vehicle covers the need to replace other parts.
- Your vehicle has a crash sensing and diagnostic module which records information after a crash. See *Vehicle Data Recording and Privacy on page 7-16* and *Event Data Recorders on page 7-16*.
- Let only qualified technicians work on the airbag systems. Improper service can mean that an airbag system will not work properly. See your dealer/retailer for service.

Passenger Sensing System

Your vehicle has a passenger sensing system for the right front passenger's position. The passenger airbag status indicator will be visible on the instrument panel when you start your vehicle.

The words ON and OFF will be visible during the system check.

When the system check is complete, either the word ON or the word OFF will be visible depending on whether the seat is occupied and/or the weight of the occupant. See *Passenger Airbag Status Indicator on page 3-30*. The passenger sensing system will turn off the right front passenger's frontal airbag and seat-mounted side impact airbag (if equipped) under certain conditions. The driver's airbags are not part of the passenger sensing system.

Downloaded from www.Manualslib.com manuals search engine

The passenger sensing system will also turn off the right front passenger's safety belt pretensioner if it detects that there is no occupant in that position.

The passenger sensing system works with sensors that are part of the right front passenger's seat and safety belt. The sensors are designed to detect the presence of a properly-seated occupant and determine if the right front passenger's frontal airbag and seat-mounted side impact airbag (if equipped) should be enabled (may inflate) or not.

Accident statistics show that children are safer if they are restrained in the rear rather than the front seat.

We recommend that children be secured in a rear seat, including: an infant or a child riding in a rear-facing child restraint; a child riding in a forward-facing child seat; an older child riding in a booster seat; and children, who are large enough, using safety belts.

A label on your sun visor says, "Never put a rear-facing child seat in the front." This is because the risk to the rear-facing child is so great, if the airbag deploys.

⚠ CAUTION:

A child in a rear-facing child restraint can be seriously injured or killed if the right front passenger's airbag inflates. This is because

CAUTION: (Continued)

CAUTION: (Continued)

the back of the rear-facing child restraint would be very close to the inflating airbag.

Even though the passenger sensing system is designed to turn off the right front passenger's frontal and seat-mounted side impact airbag (if equipped) if the system detects a rear-facing child restraint, no system is fail-safe, and no one can guarantee that an airbag will not deploy under some unusual circumstance, even though it is turned off. We recommend that rear-facing child restraints be secured in a rear seat, even if the airbag(s) are off.

If you secure a forward-facing child restraint in the right front seat, always move the front passenger seat as far back as it will go. It is better to secure the child restraint in a rear seat.

The passenger sensing system is designed to turn off the right front passenger's frontal airbag and seat-mounted side impact airbag (if equipped) if:

- The right front passenger seat is unoccupied.
- The system determines that an infant is present in a rear-facing infant seat.

Downloaded from www.Manualslib.com manuals search engine

- The system determines that a small child is present in a child restraint.
- The system determines that a small child is present in a booster seat.
- A right front passenger takes his/her weight off of the seat for a period of time.
- The right front passenger seat is occupied by a smaller person, such as a child who has outgrown child restraints.
- Or, if there is a critical problem with the airbag system or the passenger sensing system.

When the passenger sensing system has turned off the right front passenger's frontal airbag and seat-mounted side impact airbag (if equipped), the OFF indicator will light and stay lit to remind you that the airbag or airbags are off.

If a child restraint has been installed and the on indicator is lit, turn the vehicle off. Remove the child restraint from the vehicle and reinstall the child restraint with the ignition key in the ACC or LOCK position, following the child restraint manufacturer's directions and refer to *Securing a Child Restraint in the Right Front Seat Position on page 1-46*.

If, after reinstalling the child restraint and restarting the vehicle, the on indicator is still lit, check to make sure that the vehicle's seatback is not pressing the child restraint into the seat cushion. If this happens, slightly recline the vehicle's seatback and adjust the seat cushion if possible. Also make sure the child restraint is not trapped under the vehicle head restraint. If this happens, adjust the head restraint. See *Head Restraints on page 1-5*.

Remove any additional material from the seat such as blankets, cushions, seat covers, seat heaters, or seat massagers before reinstalling or securing the child restraint.

If the on indicator is still lit, secure the child in the child restraint in a rear seat position in the vehicle and check with your dealer/retailer.

An object, person or child in the rear seat contacting or pressing the right front passenger's seatback, or objects stowed under the right front passenger's seat, may affect the proper functioning of the passenger sensing system.

When you use a safety belt extender in the right front passenger's seat, make sure the passenger airbag status indicator shows the word ON. If the indicator shows OFF, disconnect the extender's latch from the buckle then reconnect the safety belt. Make sure the indicator light shows ON, then reconnect the safety belt extender.
If you use the safety belt extender while the indicator light shows OFF, the right front passenger's frontal airbag, seat-mounted side impact airbag (if equipped), and the safety belt pretensioner may not activate correctly.
See *Airbag System on page 1-50* for important safety information about your airbags.

Downloaded from www.Manualslib.com manuals search engine

The passenger sensing system is designed to enable (may inflate) the right front passenger's frontal airbag and seat-mounted side impact airbag (if equipped) anytime the system senses that a person of adult size is sitting properly in the right front passenger's seat. When the passenger sensing system has allowed the airbags and pretensioner to be enabled, the on indicator will light and stay lit to remind you that the airbags and pretensioner are active.

For some children who have outgrown child restraints and for very small adults, the passenger sensing system may or may not turn off the airbags and pretensioner, depending upon the person's seating posture and body build. Everyone in your vehicle who has outgrown child restraints should wear a safety belt properly — whether or not there is an airbag for that person.

If a person of adult-size is sitting in the right front passenger's seat, but the off indicator is lit, it could be because that person is not sitting properly in the seat. If this happens, turn the vehicle off, remove any additional material from the seat, such as blankets, cushions, seat covers, seat heaters or seat massagers and ask the person to place the seatback in the fully upright position, then sit upright in the seat, centered on the seat cushion, with the person's legs comfortably extended. Restart the vehicle and have the person remain in this position for two to three minutes.

This will allow the system to detect that person and then enable the right front passenger's frontal airbag, seat-mounted side impact airbag (if equipped), and safety belt pretensioner.

Safety belts help keep the passenger in position on the seat during vehicle maneuvers and braking, which helps the passenger sensing system maintain the passenger airbag status. See "Safety Belts" and "Child Restraints" in the Index for additional information about the importance of proper restraint use.

Downloaded from www.Manualslib.com manuals search engine

⚠ CAUTION:

If the airbag readiness light in the instrument panel cluster ever comes on and stays on, it means that something may be wrong with the airbag system. If this ever happens, have the vehicle serviced promptly, because an adult-size person sitting in the right front passenger's seat may not have the protection of the airbag(s). See *Airbag Readiness Light on page 3-29* for more on this, including important safety information.

A thick layer of additional material, such as a blanket or cushion, or aftermarket equipment such as seat covers, seat heaters, seat backpacks, and seat massagers can affect how well the passenger sensing system operates. We recommend that you not use seat covers or other aftermarket equipment other than any that GM has approved for your specific vehicle. See *Adding Equipment to Your Airbag-Equipped Vehicle on page 1-65* for more information about modifications that can affect how the system operates.

⚠ CAUTION:

Stowing of articles under the passenger's seat or between the passenger's seat cushion and seatback may interfere with the proper operation of the passenger sensing system.

Downloaded from www.Manualslib.com manuals search engine

Servicing Your Airbag-Equipped Vehicle

Airbags affect how your vehicle should be serviced. There are parts of the airbag system in several places around your vehicle. Your dealer/retailer and the service manual have information about servicing your vehicle and the airbag system. To purchase a service manual, see *Service Publications Ordering Information on page 7-15*.

⚠ CAUTION:

For up to 10 seconds after the ignition is turned off and the battery is disconnected, an airbag can still inflate during improper service. You can be injured if you are close to an airbag when it inflates. Avoid yellow connectors. They are probably part of the airbag system. Be sure to follow proper service procedures, and make sure the person performing work for you is qualified to do so.

Downloaded from www.Manualslib.com manuals search engine

Adding Equipment to Your Airbag-Equipped Vehicle

Q: Is there anything I might add to or change about the vehicle that could keep the airbags from working properly?

A: Yes. If you add things that change your vehicle's frame, bumper system, height, front end or side sheet metal, they may keep the airbag system from working properly. Changing or moving any parts of the front seats, safety belts, the airbag sensing and diagnostic module, steering wheel, instrument panel, roof-rail airbag modules, ceiling headliner or pillar garnish trim, front sensors, or airbag wiring can affect the operation of the airbag system.

In addition, your vehicle has a passenger sensing system for the right front passenger's position, which includes sensors that are part of the passenger's seat. The passenger sensing system may not operate properly if the original seat trim is replaced with non-GM covers, upholstery or trim, or with GM covers, upholstery or trim designed for a different vehicle. Any object, such as an aftermarket seat heater or a comfort enhancing pad or device, installed under or on top of the seat fabric, could also interfere with the operation of the passenger sensing system. This could either prevent proper deployment of the passenger airbag(s) or prevent the passenger sensing system from properly turning off the passenger airbag(s). See *Passenger Sensing System on page 1-59*.

If you have any questions about this, you should contact Customer Assistance before you modify your vehicle. The phone numbers and addresses for Customer Assistance are in Step Two of the Customer Satisfaction Procedure in this manual. See *Customer Satisfaction Procedure on page 7-2*.

Q: Because I have a disability, I have to get my vehicle modified. How can I find out whether this will affect my airbag system?

A: If you have questions, call Customer Assistance. The phone numbers and addresses for Customer Assistance are in Step Two of the Customer Satisfaction Procedure in this manual. See *Customer Satisfaction Procedure on page 7-2*.

In addition, your dealer/retailer and the service manual have information about the location of the airbag sensors, sensing and diagnostic module and airbag wiring.

Downloaded from www.Manualslib.com manuals search engine

Restraint System Check

Checking the Restraint Systems

Safety Belts

Now and then, make sure the safety belt reminder light and all your belts, buckles, latch plates, retractors and anchorages are working properly.

Look for any other loose or damaged safety belt system parts. If you see anything that might keep a safety belt system from doing its job, have it repaired. Torn or frayed safety belts may not protect you in a crash. They can rip apart under impact forces. If a belt is torn or frayed, get a new one right away.

Make sure the safety belt reminder light is working. See *Safety Belt Reminders on page 3-28* for more information.

Keep safety belts clean and dry. See *Care of Safety Belts on page 5-85*.

Airbags

The airbag system does not need regularly scheduled maintenance or replacement. Make sure the airbag readiness light is working. See *Airbag Readiness Light on page 3-29* for more information.

Notice: **If an airbag covering is damaged, opened, or broken, the airbag may not work properly. Do not open or break the airbag coverings. If there are any opened or broken airbag covers, have the airbag covering and/or airbag module replaced. For the location of the airbag modules, see *What Makes an Airbag Inflate? on page 1-57*. See your dealer/retailer for service.**

Downloaded from www.Manualslib.com manuals search engine

Replacing Restraint System Parts After a Crash

⚠ CAUTION:

A crash can damage the restraint systems in your vehicle. A damaged restraint system may not properly protect the person using it, resulting in serious injury or even death in a crash. To help make sure your restraint systems are working properly after a crash, have them inspected and any necessary replacements made as soon as possible.

If you have had a crash, do you need new belts or LATCH system (if equipped) parts?

After a very minor crash, nothing may be necessary. But the belt assemblies that were used during any crash may have been stressed or damaged. See your dealer/retailer to have your safety belt assemblies inspected or replaced.

If your vehicle has the LATCH system and it was being used during a crash, you may need new LATCH system parts.

New parts and repairs may be necessary even if the belt or LATCH system (if equipped), was not being used at the time of the crash.

If an airbag inflates, you will need to replace airbag system parts. See the part on the airbag system earlier in this section.

Have your safety belt pretensioners checked if your vehicle has been in a crash, if your airbag readiness light stays on after you start your vehicle, or while you are driving. See *Airbag Readiness Light on page 3-29*.

Downloaded from www.Manualslib.com manuals search engine

✍ NOTES

Downloaded from www.Manualslib.com manuals search engine

Section 2 Features and Controls

Keys 2-2
Remote Keyless Entry (RKE) System 2-3
Remote Keyless Entry (RKE) System Operation 2-4
Doors and Locks 2-7
Door Locks 2-7
Power Door Locks 2-8
Rear Door Security Locks 2-9
Liftgate/Liftglass 2-10
Windows 2-12
Manual Windows 2-12
Power Windows 2-13
Sun Visors 2-14
Theft-Deterrent Systems 2-14
Immobilizer 2-14
Immobilizer Operation (Canada Only) 2-15
Content Theft-Deterrent 2-16
Starting and Operating Your Vehicle 2-18
New Vehicle Break-In 2-18
Ignition Positions 2-19
Starting the Engine 2-20
Engine Coolant Heater 2-22
Automatic Transmission Operation 2-23
Overdrive Off 2-25
Manual Transmission Operation 2-26
Parking Brake 2-27
Shifting Into PARK (P) (Automatic Transmission) 2-28
Shifting Out of PARK (P) 2-30
Parking Your Vehicle (Manual Transmission) 2-31
Parking Over Things That Burn 2-31
Engine Exhaust 2-32
Running the Engine While Parked 2-32
Mirrors 2-33
Manual Rearview Mirror 2-33
Manual Rearview Mirror with OnStar® 2-33
Automatic Dimming Rearview Mirror 2-34
Outside Remote Control Mirrors 2-34
Outside Convex Mirror 2-35
OnStar® System 2-35
Storage Areas 2-39
Glove Box 2-39
Cupholder(s) 2-39
Coinholder(s) 2-39
Instrument Panel Storage 2-39
Center Console Storage 2-39
Floor Mats 2-39
Luggage Carrier 2-40
Rear Storage Area 2-41
Rear Cargo Accessory Track System 2-42
Cargo Cover 2-42
Cargo Tie Downs 2-42
Sunroof 2-43

Downloaded from www.Manualslib.com manuals search engine

Keys

⚠ CAUTION:

Leaving children in a vehicle with the ignition key is dangerous for many reasons, children or others could be badly injured or even killed. They could operate the power windows or other controls or even make the vehicle move. The windows will function with the keys in the ignition and they could be seriously injured or killed if caught in the path of a closing window. Do not leave the keys in a vehicle with children.

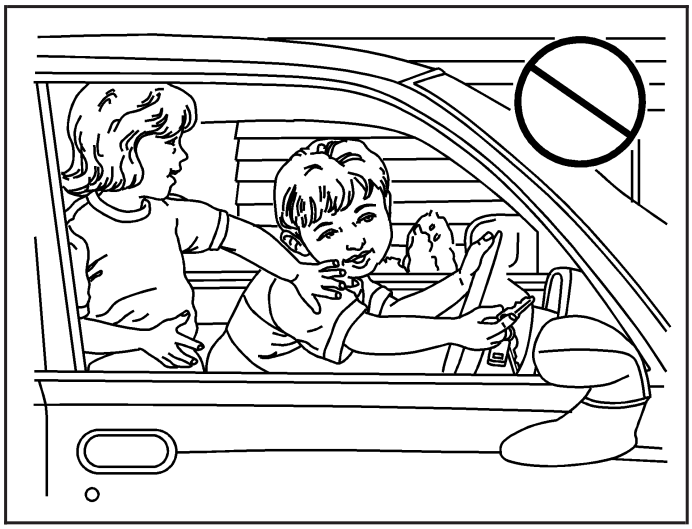

The key is used for the ignition, doors and all other locks.

The key number is on the tag attached to the key ring. Keep this tag and give it to your dealer/retailer if a new key needs to be made.

If your vehicle has an Immobilizer theft deterrent system, the key will have a transponder in the key head that matches a decoder in the vehicle. See *Immobilizer Operation (Canada Only) on page 2-15* for additional information.

Downloaded from www.Manualslib.com manuals search engine

Do not do any of the following to keys with a transponder:

- Cover the key grip with any material that cuts off electromagnetic waves.
- Hit the key hard against other objects.
- Leave the key exposed to high temperatures for a long period of time.
- Put the key in water.
- Use the key with electromagnetic materials.

If a replacement key or an additional key with a transponder is needed, see your dealer/retailer. Bring the key and key number with you.

Any new Immobilizer key must be programmed before it will start the vehicle. See your dealer/retailer. If you make your own duplicate key, you will not be able to cancel the system or start the vehicle.

In an emergency, contact Roadside Assistance. See *Roadside Assistance Program on page 7-6* for more information.

Notice: **If you ever lock your keys in your vehicle, you may have to damage the vehicle to get in. Be sure you have spare keys.**

Remote Keyless Entry (RKE) System

If the vehicle has the Remote Keyless Entry (RKE) system, it operates on a radio frequency subject to Federal Communications Commission (FCC) Rules and with Industry Canada.

This device complies with Part 15 of the FCC Rules. Operation is subject to the following two conditions:

1. This device may not cause interference.
2. This device must accept any interference received, including interference that may cause undesired operation of the device.

This device complies with RSS-210 of Industry Canada. Operation is subject to the following two conditions:

1. This device may not cause interference.
2. This device must accept any interference received, including interference that may cause undesired operation of the device.

Changes or modifications to this system by other than an authorized service facility could void authorization to use this equipment.

Downloaded from www.Manualslib.com manuals search engine

At times you may notice a decrease in range. This is normal for any RKE system. If the transmitter does not work or if you have to stand closer to your vehicle for the transmitter to work, try this:

- Check the distance. You may be too far from your vehicle. You may need to stand closer during rainy or snowy weather.
- Check the location. Other vehicles or objects may be blocking the signal. Take a few steps to the left or right, hold the transmitter higher, and try again.
- Check to determine if battery replacement is necessary. See “Battery Replacement” later in this section.
- If you are still having trouble, see your dealer/retailer or a qualified technician for service.

Remote Keyless Entry (RKE) System Operation

If your vehicle has this feature, you can lock and unlock your doors from about 3 feet (1 m) up to 30 feet (9 m) away using the Remote Keyless Entry (RKE) transmitter supplied with your vehicle. The RKE transmitter will look different if your vehicle was purchased in Canada, however it will operate the same.

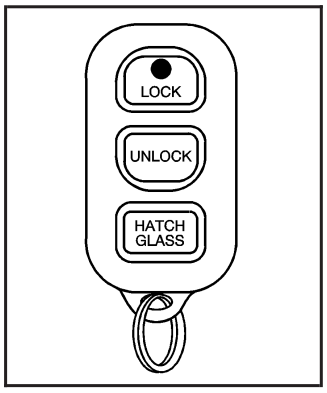

LOCK: Press this button to lock all of the doors.

The turn signal lights will flash once to confirm that the doors have locked.

Downloaded from www.Manualslib.com manuals search engine

UNLOCK: Press this button once to unlock the driver's door. The turn signal lights will flash twice and the interior lamps will come on to confirm that the door has unlocked. If the UNLOCK button is pressed again within three seconds, all remaining doors will unlock and the turn signal lights will flash twice and interior lamps will remain on to confirm that all doors & hatch have unlocked. The interior lamps will stay on for 15 seconds or until the ignition is turned on.

HATCH/GLASS: Press this button to open the rear liftglass. If the ignition key is in the ON position, the liftglass cannot be opened by the HATCH/GLASS button on the transmitter.

Matching Transmitter(s) to Your Vehicle

Each RKE transmitter is coded to prevent another transmitter from unlocking your vehicle. If a transmitter is lost or stolen, a replacement can be purchased through your dealer/retailer. Remember to bring any remaining transmitters with you when you go to your dealer/retailer. When the dealer/retailer matches the replacement transmitter to your vehicle, any remaining transmitters must also be matched. Once your dealer/retailer has coded the new transmitter, the lost transmitter will not unlock your vehicle. Each vehicle can have a maximum of four transmitters matched to it.

Downloaded from www.Manualslib.com manuals search engine

Battery Replacement

Under normal use, the battery in your RKE transmitter should last about three years.

The battery is weak if the transmitter will not work at the normal range in any location. If you have to get close to your vehicle before the transmitter works, it is probably time to change the battery.

Notice: **When replacing the battery, use care not to touch any of the circuitry. Static from your body transferred to these surfaces may damage the transmitter.**

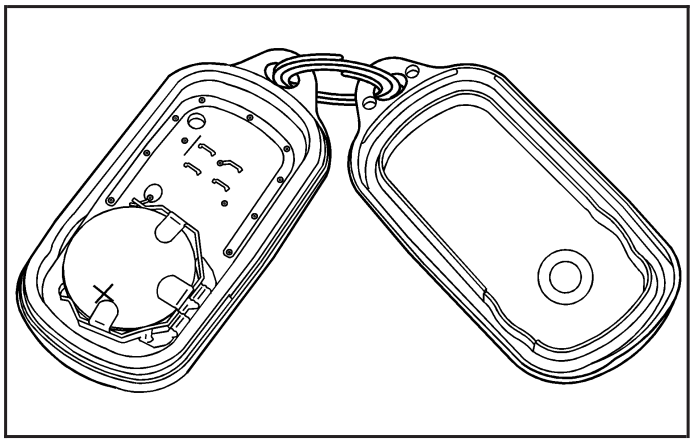

To replace the battery:

1. Insert a small coin or similar object to separate the bottom half from the top half of the transmitter.
2. Remove the battery and replace it with the new one. Make sure the positive side of the battery faces upward. For battery replacement, use a three-volt battery, type CR2032, or equivalent.
3. Snap the transmitter back together tightly to be sure no moisture can enter.

Downloaded from www.Manualslib.com manuals search engine

Doors and Locks

Door Locks

⚠ CAUTION:

Unlocked doors can be dangerous.

- **Passengers, especially children, can easily open the doors and fall out of a moving vehicle. When a door is locked, the handle will not open it. You increase the chance of being thrown out of the vehicle in a crash if the doors are not locked. So, wear safety belts properly and lock the doors whenever you drive.**
- **Young children who get into unlocked vehicles may be unable to get out. A child can be overcome by extreme heat and can suffer permanent injuries or even death from heat stroke. Always lock your vehicle whenever you leave it.**
- **Outsiders can easily enter through an unlocked door when you slow down or stop your vehicle. Locking your doors can help prevent this from happening.**

There are several ways to lock and unlock your vehicle.

From the outside, use your key or the remote keyless entry transmitter, if equipped. See *Remote Keyless Entry (RKE) System Operation on page 2-4* for more information.

If your vehicle has power door locks, open the driver's door by turning the key in the lock toward the rear of the vehicle. Turning the key back toward the center, then toward the rear again will unlock all of the doors. Using the key in the passenger's door will also unlock all of the doors.

Lock a door by turning the key toward the front of the vehicle. If you have power door locks, all the doors will lock.

Downloaded from www.Manualslib.com manuals search engine

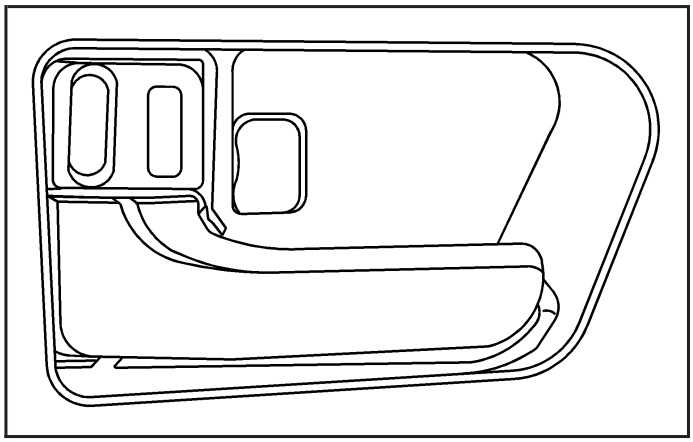

To manually lock the door from the inside, press the knob on the door forward. To unlock the door, press the knob rearward. With manual locks, you must use the key to lock and unlock the liftgate.

Power Door Locks

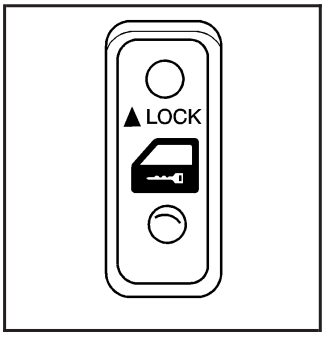

If your vehicle has this feature, the power door lock switch is located on the armrest of the driver's and front passenger's door.

(Power Door Lock): Press the top of the switch to lock all the doors. Press the bottom of the switch to unlock all the doors.

Downloaded from www.Manualslib.com manuals search engine

Rear Door Security Locks

Your vehicle is equipped with rear door security locks that help prevent passengers from opening the rear doors on your vehicle from the inside.

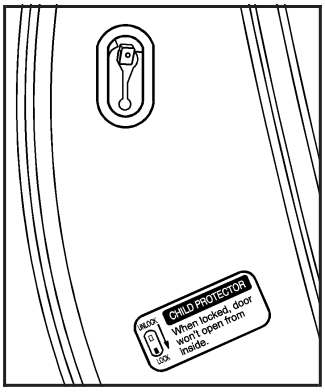

The security locks are located on the inside of the rear door trim.

To use these locks, do the following:

1. Slide the lever down.
2. Close the door.
3. Do the same thing to the other rear door lock.

The rear doors on your vehicle cannot be opened from the inside when this feature is in use.

To open a rear door with the security lock, do the following:

1. Unlock the door from the inside.
2. Then open the door from the outside.

If you don't cancel the security lock feature, adults and older children who ride in the rear won't be able to open the rear door from the inside. You should let adults and older children know how these security locks work, and how to cancel the locks.

Downloaded from www.Manualslib.com manuals search engine

To cancel the rear door security lock, do the following:

1. Unlock the door from the inside and open the door from the outside.
2. Slide the lever up.
3. Do the same for the other rear door.

The rear door locks will now work normally.

Liftgate/Liftglass

⚠ CAUTION:

It can be dangerous to drive with the liftgate or liftglass open because carbon monoxide (CO) gas can come into your vehicle. You cannot see or smell CO. It can cause unconsciousness

CAUTION: (Continued)

CAUTION: (Continued)

and even death. If you must drive with the liftgate open or if electrical wiring or other cable connections must pass through the seal between the body and the liftgate or liftglass:

- **Make sure all other windows are shut.**
- **Turn the fan on your climate control system to its highest speed and select the control setting that will force outside air into your vehicle. See "Climate Control System" in the Index.**
- **If you have air outlets on or under the instrument panel, open them all the way. See *Engine Exhaust on page 2-32*.**

Downloaded from www.Manualslib.com manuals search engine

Liftgate/Liftglass Release

To unlock and open the liftgate using the key, insert the key into the keyhole and turn counterclockwise. Raise the liftgate by hand.

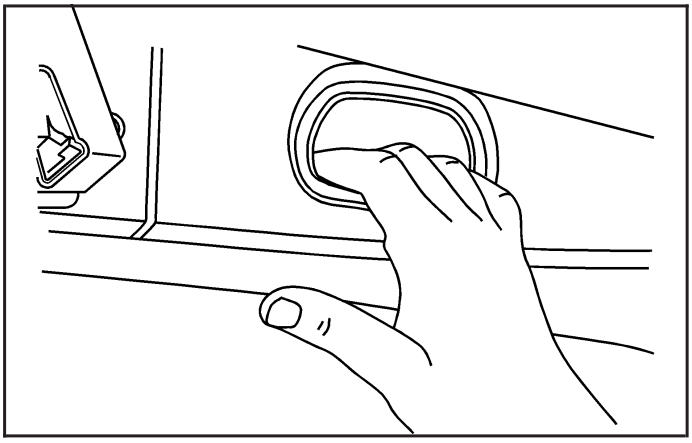

When closing the liftgate, use the handle to pull it down.

To lock the liftgate, turn the key clockwise to the first position.

To open the liftglass using the key, insert the key into the keyhole and turn clockwise to the second position. Use the handle in the center of the liftglass to help in lifting the glass.

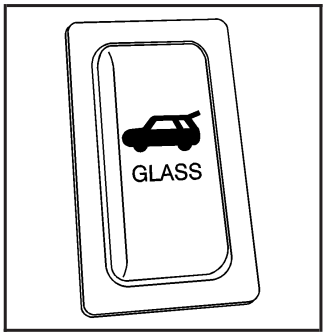

Your vehicle may have a liftglass release button which is located on the instrument panel to the left of the steering wheel. Press this button to release the liftglass.

See *Remote Keyless Entry (RKE) System Operation on page 2-4* for more information.

Downloaded from www.Manualslib.com manuals search engine

Windows

⚠ CAUTION:

Leaving children, helpless adults, or pets in a vehicle with the windows closed is dangerous. They can be overcome by the extreme heat and suffer permanent injuries or even death from heat stroke. Never leave a child, a helpless adult, or a pet alone in a vehicle, especially with the windows closed in warm or hot weather.

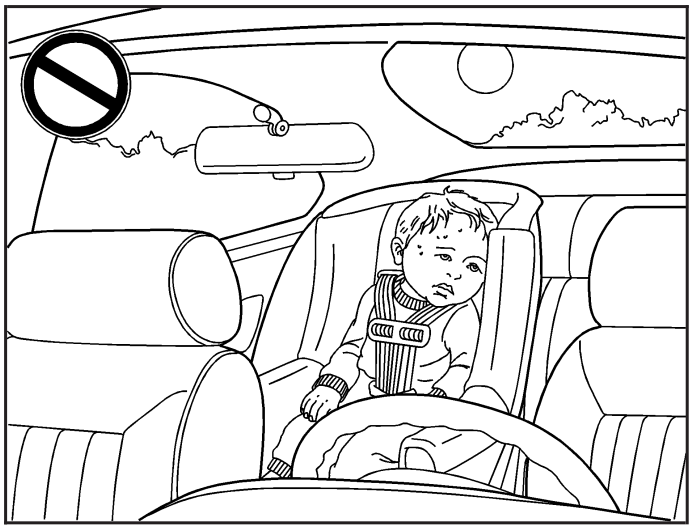

Manual Windows

Use the window crank to open and close each window.

Downloaded from www.Manualslib.com manuals search engine

Power Windows

⚠ CAUTION:

Leaving children, helpless adults, or pets in a vehicle with the windows closed is dangerous. They can be overcome from extreme heat in warm or hot weather and suffer permanent injuries or even death from heat stroke.

Leaving children in a vehicle with the ignition key is dangerous for many reasons, children or others could be badly injured or even killed. They could operate the power windows or other controls or even make the vehicle move. The windows will function with the keys in the ignition and they could be seriously injured or killed if caught in the path of a closing window. Do not leave keys in a vehicle with children.

When there are children in the rear seat use the window lockout button to prevent unintentional operation of the windows.

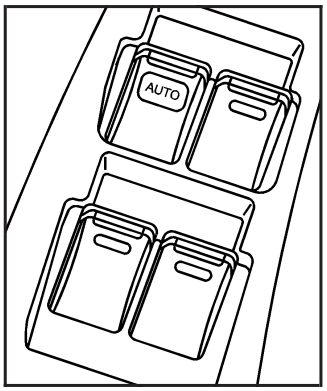

If your vehicle has this feature, the switches controlling the driver's and passenger's windows are located on the driver's door.

The power window switch on each passenger door controls that window only. These switches work while the ignition is turned to ON.

Press the front of a switch to lower a window and lift the front of the switch to raise a window.

AUTO (Express-Down): Press this switch all the way down and release it to lower the driver's window quickly.

(Lock-Out): Press the window lock-out button, located near the driver's power door lock switches, to disable the passenger's power window switches. Press the button again to enable the window switches.

Only the driver's window will operate with the lock-out button pressed.

Downloaded from www.Manualslib.com manuals search engine

Sun Visors

To block out glare, swing down the sun visors. You can also swing them to the side.

The visors can be slid along the rod for extended coverage for the side windows unless your vehicle has roof-mounted side impact airbags.

Visor Vanity Mirror

Swing down the sun visor to expose the vanity mirror. The vanity mirror may have a cover. Lift the cover to expose the mirror.

Theft-Deterrent Systems

Vehicle theft is big business, especially in some cities. Although your vehicle has a number of theft-deterrent features, we know that nothing we put on it can make it impossible to steal.

Immobilizer

This device complies with Part 15 of the FCC Rules. Operation is subject to the following two conditions:

1. This device may not cause interference.
2. This device must accept any interference received, including interference that may cause undesired operation.

This device complies with RSS-210 of Industry Canada. Operation is subject to the following two conditions:

1. This device may not cause interference.
2. This device must accept any interference received, including interference that may cause undesired operation of the device.

Changes or modifications to this system by other than an authorized service facility could void authorization to use this equipment.

Downloaded from www.Manualslib.com manuals search engine

Immobilizer Operation (Canada Only)

Your vehicle has a passive theft-deterrent system.

The system is automatically armed when the key is removed from the ignition.

You do not have to manually arm or disarm the system.

The security light will come on if there is a problem with arming or disarming the theft-deterrent system.

Your vehicle will have one of the following security lights, located on the instrument panel to the left of the steering wheel.

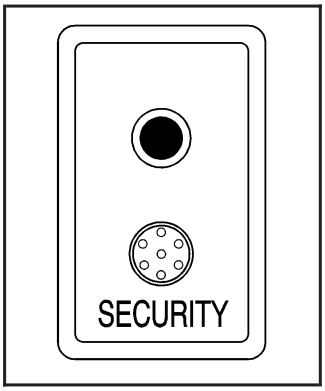

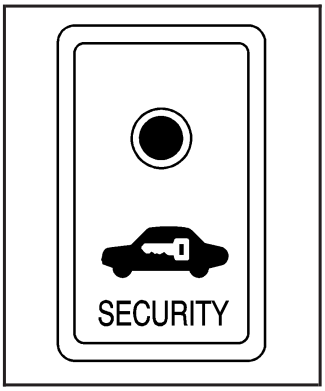

The security light will flash when the system is armed.

When the key is inserted in the ignition the transponder in the key head transmits an electronic code to the vehicle and automatically cancels the system. Only the correct key will start the vehicle.

If the engine does not start, there may be a problem with your theft-deterrent system. Turn the ignition off and try again.

If the engine still does not start, and the key appears to be undamaged, try another ignition key. At this time, you may also want to check the fuse. See *Fuses and Circuit Breakers on page 5-91*.

If the engine still does not start with the other key, your vehicle needs service. If your vehicle does start, the first key may be faulty. See your dealer/retailer who can service the theft-deterrent system and have a new key made.

If any of the following conditions occur, contact your dealer/retailer.

- The security light stays on.
- The security light does not start flashing when the key is removed from the ignition.
- The security light flashes inconsistently.

See your dealer/retailer to have a new key with a transponder made. Bring the key and key number with you.

In an emergency, contact Roadside Assistance Program. See *Roadside Assistance Program on page 7-6*.

Downloaded from www.Manualslib.com manuals search engine

Do not leave the key or device that disarms or deactivates the theft deterrent system in the vehicle.

Content Theft-Deterrent

Your vehicle may have a theft-deterrent system designed to activate an alarm if someone attempts to damage or break into your vehicle. The alarm will sound and the headlamps and turn signal lamps will flash for about one minute. The interior lights will also come on when the interior lamps control is in the door position.

Your vehicle will have one of the following security lights, located on the instrument panel to the left of the steering wheel.

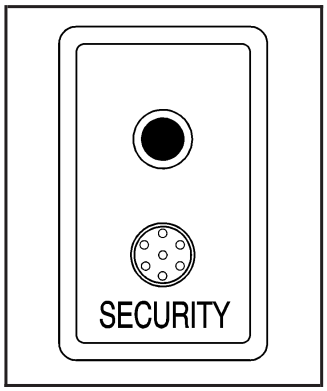

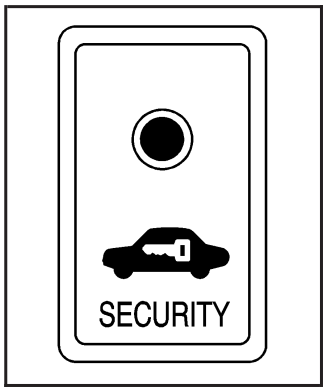

Arming the System

To arm the system:

1. Remove the key from the ignition.

   The security light will flash when the key is removed from the ignition. See *Immobilizer Operation (Canada Only) on page 2-15* for additional information.

2. Have all passengers get out of the vehicle.
3. Close and lock all doors including the liftgate/liftglass with the key or Remote Keyless Entry (RKE) transmitter.

   The security light will come on when all doors and liftgate are closed and locked.

   The system will be automatically set after 30 seconds. When the system is set, the security light will flash.

4. After the security light starts flashing, you may leave the vehicle.

   Do not leave anyone in the vehicle when you set the system, because unlocking the vehicle from the inside will activate the system.

Downloaded from www.Manualslib.com manuals search engine

Testing the Alarm

To test the alarm:

1. Open all the windows.
2. Set the system as described in the previous procedure. The doors and liftgate should be locked with the key or RKE transmitter. Be sure to wait until the security light starts flashing.
3. Unlock the driver's door from the inside. The system should activate the alarm.
4. Stop the alarm as described in the disarming procedure following.
5. Repeat this operation for the other doors. Also check that the system is activated when the battery terminal is disconnected and then reconnected.

   If the system does not work properly, have it checked by your dealer/retailer.

How the System Alarm is Activated

The system will activate the alarm:

- If the driver's or front passenger's door is unlocked without using the key or RKE transmitter.
- If any door or the liftgate/liftglass is forcibly opened without the key or RKE transmitter.
- If the battery terminal is disconnected and then reconnected.
- If the ignition is hot-wired.
- If the side window glass is broken or damaged.

The security light will come on when the system is activated.

If the driver's or front passenger's doors are unlocked without using the key or RKE transmitter, the other doors and the liftgate will be automatically locked again.

After one minute the alarm will automatically stop and the security light will start flashing again.

Downloaded from www.Manualslib.com manuals search engine

Reactivating the System

Once the system is set, it will automatically reset the alarm after the alarm stops. The alarm will activate again under the same conditions as described earlier.

Disarming the System

To disarm the alarm:

- Turn the ignition key from LOCK/OFF to ON/RUN.
- Unlock any of the doors with the key or with the RKE transmitter.

  If the liftgate or liftglass is opened with the key, the system will still be activated.

Do not leave the key or device that disarms or deactivates the theft deterrent system in the vehicle.

Starting and Operating Your Vehicle

New Vehicle Break-In

Notice: **Your vehicle does not need an elaborate break-in. But it will perform better in the long run if you follow these guidelines:**

- **Do not drive at any one constant speed, fast or slow, for the first 500 miles (805 km). Do not make full-throttle starts. Avoid downshifting to brake or slow the vehicle.**
- **Avoid making hard stops for the first 200 miles (322 km) or so. During this time the new brake linings are not yet broken in. Hard stops with new linings can mean premature wear and earlier replacement. Follow this breaking-in guideline every time you get new brake linings.**
- **Do not tow a trailer during break-in. See *Towing a Trailer on page 4-27* for the trailer towing capabilities of your vehicle and more information.**

Following break-in, engine speed and load can be gradually increased.

Downloaded from www.Manualslib.com manuals search engine

Ignition Positions

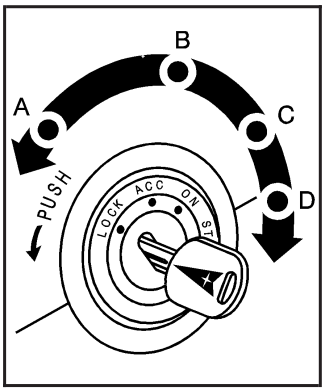

With the key in the ignition switch, you can turn it to four different positions.

Notice: **If your key seems stuck in LOCK and you cannot turn it, be sure you are using the correct key; if so, is it all the way in? If it is, then turn the steering wheel left and right while you turn the key hard. Turn the key only with your hand. Using a tool to force it could break the key or the ignition switch. If none of these work, then your vehicle needs service.**

(A) LOCK/OFF: This is the only position from which you can remove the key. This locks your steering wheel, ignition and automatic transmission. Push in the ignition switch as you turn the key toward you.

If you have an automatic transmission, the ignition switch cannot be turned to LOCK/OFF unless the shift lever is in PARK (P).

⚠ CAUTION:

On manual transmission vehicles, turning the key to LOCK/OFF will lock the steering column and result in a loss of ability to steer the vehicle. This could cause a collision. If you need to turn the engine off while the vehicle is moving, turn the key only to ACC/ACCESSORY. Do not push the key in while the vehicle is moving.

(B) ACC/ACCESSORY: This position operates some of your electrical accessories, such as the radio, but not the ventilation fan. It unlocks the steering wheel and ignition. To move the key from ACC/ACCESSORY to LOCK/OFF, push in the key and then turn it to LOCK/OFF.

Downloaded from www.Manualslib.com manuals search engine

(C) ON/RUN: This is the position the switch returns to after you start your engine and release the switch. The switch stays in the ON/RUN position when the engine is running. But even when the ignition is not running, you can use ON/RUN to operate your electrical accessories, including the ventilation fan and 115 volt power outlet, and to display some warning and indicator lights.

The battery could be drained if you leave the key in the ACC/ACCESSORY or ON/RUN position with the engine off. You may not be able to start your vehicle if the battery is allowed to drain for an extended period of time.

(D) START: This position starts the engine. When the engine starts, release the key. The ignition switch will return to ON/RUN for normal driving.

When the engine is not running, ACC/ACCESSORY and ON/RUN allow you to operate some of your electrical accessories.

A warning tone will sound if you open the driver's door when the ignition is still in ACC/ACCESSORY or LOCK/OFF and the key is in the ignition.

Key In the Ignition

Never leave your vehicle with the keys inside, as it is an easy target for joy riders or thieves. If you leave the key in the ignition and park your vehicle, a chime will sound, when you open the driver's door. Always remember to remove your key from the ignition and take it with you. This will lock your ignition and transmission. Also, always remember to lock the doors.

The battery could be drained if you leave the key in the ignition while your vehicle is parked. You may not be able to start your vehicle after it has been parked for an extended period of time.

Starting the Engine

Move the transmission in the proper gear.

Automatic Transmission

Move the shift lever to PARK (P) or NEUTRAL (N). The engine will not start in any other position -- this is a safety feature. To restart when you are already moving, use NEUTRAL (N) only.

Notice: **Do not try to shift to PARK (P) if your vehicle is moving. If you do, you could damage the transmission. Shift to PARK (P) only when your vehicle is stopped.**

Downloaded from www.Manualslib.com manuals search engine

Manual Transmission

The shift lever should be in NEUTRAL and the parking brake engaged. Hold the clutch pedal down to the floor and start the engine. Your vehicle will not start if the clutch pedal is not all the way down. That is a safety feature.

Starting Procedure

1. With your foot off the accelerator pedal, turn the ignition key to START. When the engine starts, let go of the key. The idle speed will go down as the engine gets warm. Do not race the engine immediately after starting it. Operate the engine and transmission gently to allow the oil to warm up and lubricate all moving parts.

   Your vehicle has a Computer-Controlled Cranking System. This feature assists in starting the engine and protects components. If the ignition key is turned to the START position, and then released when the engine begins cranking, the engine will continue cranking for a few seconds or until the vehicle starts. If the engine does not start and the key is held in START for many seconds, cranking will be stopped after 15 seconds to prevent cranking motor damage. To prevent gear damage, this system also prevents cranking if the engine is already running. Engine cranking can be stopped by turning the ignition switch to ACC/ACCESSORY or LOCK/OFF.

   When using a key with a transponder chip and while starting the engine, do not use a key with the key ring touching the key grip or other transponder chip keys nearby. This may cause the engine not to start or may stop it soon after it starts.

Notice: **Cranking the engine for long periods of time, by returning the key to the START position immediately after cranking has ended, can overheat and damage the cranking motor, and drain the battery. Wait at least 15 seconds between each try, to let the cranking motor cool down.**

2. If the engine does not start after 5-10 seconds, especially in very cold weather (below 0°F or –18°C), it could be flooded with too much gasoline. Try pushing the accelerator pedal all the way to the floor and holding it there as you hold the key in START for up to a maximum of 15 seconds. Wait at least 15 seconds between each try, to allow the cranking motor to cool down. When the engine starts, let go of the key and accelerator. If the vehicle starts briefly but then stops again, do the same thing. This clears the extra gasoline from the engine. Do not race the engine immediately after starting it. Operate the engine and transmission gently until the oil warms up and lubricates all moving parts.

Notice: **The engine is designed to work with the electronics in your vehicle. If you add electrical parts or accessories, you could change the way the engine operates. Before adding electrical equipment, check with your dealer/retailer. If you do not, your engine might not perform properly. Any resulting damage would not be covered by your vehicle's warranty.**

Downloaded from www.Manualslib.com manuals search engine

Engine Coolant Heater

The engine coolant heater, if available, can help in cold weather conditions at or below 0°F (–18°C) for easier starting and better fuel economy during engine warm-up. Plug in the coolant heater at least four hours before starting your vehicle.

To Use the Engine Coolant Heater

1. Turn off the engine.
2. Open the hood and unwrap the electrical cord. The electrical cord is located on the driver's side of the engine compartment.
3. Plug it into a normal, grounded 110-volt AC outlet.

⚠ CAUTION:

Plugging the cord into an ungrounded outlet could cause an electrical shock. Also, the wrong kind of extension cord could overheat and cause a fire. You could be seriously injured. Plug the cord into a properly grounded three-prong 110-volt AC outlet. If the cord will not reach, use a heavy-duty three-prong extension cord rated for at least 15 amps.

4. Before starting the engine, be sure to unplug and store the cord as it was before to keep it away from moving engine parts. If you do not, it could be damaged.

How long should you keep the coolant heater plugged in? The answer depends on the outside temperature, the kind of oil you have, and some other things. Instead of trying to list everything here, we ask that you contact your dealer in the area where you will be parking your vehicle. The dealer/retailer can give you the best advice for that particular area.

Downloaded from www.Manualslib.com manuals search engine

Automatic Transmission Operation

P
R
N
D
2
L

There are several different positions for your shift lever.

PARK (P): This position locks your front wheels. It is the best position to use when you start your engine because your vehicle cannot move easily.

⚠ CAUTION:

It is dangerous to get out of your vehicle if the shift lever is not fully in PARK (P) with the parking brake firmly set. Your vehicle can roll.

CAUTION: (Continued)

CAUTION: (Continued)

Do not leave your vehicle when the engine is running unless you have to. If you have left the engine running, the vehicle can move suddenly. You or others could be injured. To be sure your vehicle will not move, even when you are on fairly level ground, always set your parking brake and move the shift lever to PARK (P). See *Shifting Into PARK (P) (Automatic Transmission) on page 2-28*. If you are pulling a trailer, see *Towing a Trailer on page 4-27*.

Make sure that the shift lever is fully in PARK (P) before starting the engine. Your vehicle has an automatic transmission shift lock control system. You have to fully apply your regular brakes first and then press the shift lever button before you can shift from PARK (P) when the ignition key is in ON. If you cannot shift out of PARK (P), ease pressure on the shift lever, push the shift lever all the way into PARK (P) and release the shift lever button as you maintain brake application. Then press the shift lever button and move the shift lever into the gear you wish. See *Shifting Out of PARK (P) on page 2-30*.

Downloaded from www.Manualslib.com manuals search engine

REVERSE (R): Use this gear to back up.

Notice: **Shifting to REVERSE (R) while your vehicle is moving forward could damage the transmission. The repairs would not be covered by your warranty. Shift to REVERSE (R) only after your vehicle is stopped.**

To rock your vehicle back and forth to get out of snow, ice or sand without damaging your transmission, see *If Your Vehicle is Stuck in Sand, Mud, Ice, or Snow on page 4-18*.

NEUTRAL (N): In this position, your engine does not connect with the wheels. To restart when you are already moving, use NEUTRAL (N) only.

⚠ CAUTION:

Shifting into a drive gear while the engine is running at high speed is dangerous. Unless your foot is firmly on the brake pedal, your vehicle could move very rapidly. You could lose control and hit people or objects. Do not shift into a drive gear while your engine is running at high speed.

Notice: **Shifting out of PARK (P) or NEUTRAL (N) with the engine running at high speed may damage the transmission. The repairs would not be covered by your warranty. Be sure the engine is not running at high speed when shifting your vehicle.**

DRIVE (D): This position is for normal driving. It provides the best fuel economy for your vehicle. If you need more power for passing, and you are:

- Going less than about 27 mph (43 km/h), push your accelerator pedal about halfway down.
- Going about 29 mph (47 km/h) or more, push your accelerator pedal all the way down. You will shift down to the next gear and have more power.

  Downshifting the transmission in slippery road conditions could result in skidding, see Skidding under *Loss of Control on page 4-10*

SECOND (2): This position reduces vehicle speed more than DRIVE (D) without using your brakes. You can use SECOND (2) on hills. It can help control your speed as you go down steep mountain roads, but then you would also want to use your brakes off and on.

Downloaded from www.Manualslib.com manuals search engine

LOW (L): This position reduces vehicle speed even more than SECOND (2) without using your brakes. You can use it on very steep hills, or in deep snow or mud. If the shift lever is put in LOW (L), the transmission will not shift into low gear until the vehicle is going slow enough.

Notice: **Spinning the tires or holding the vehicle in one place on a hill using only the accelerator pedal may damage the transmission. The repair will not be covered by your warranty. If you are stuck, do not spin the tires. When stopping on a hill, use the brakes to hold the vehicle in place.**

Overdrive Off

Vehicles with an automatic transmission have an O/D (overdrive off) button located on the left side of the shift lever.

When you turn on your vehicle overdrive will automatically come on until you turn it off.

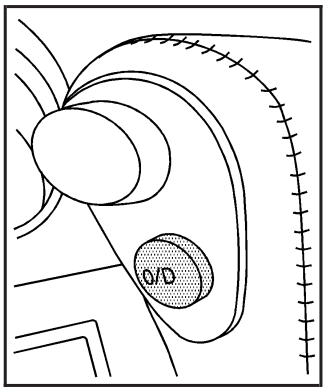

Press the O/D button to turn overdrive off or on. A light on the instrument panel cluster comes on when the overdrive is on. See *Overdrive Off Light on page 3-39*.

Drive your vehicle with the overdrive on for better fuel economy and quieter driving.

Downloaded from www.Manualslib.com manuals search engine

Manual Transmission Operation

Five-Speed Transmission

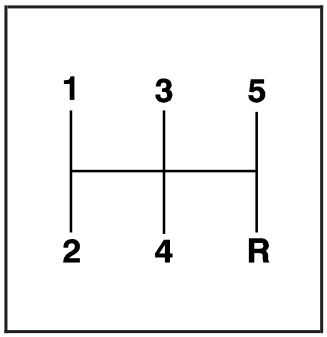

FIRST (1): Press the clutch pedal and shift into FIRST (1). Then, slowly let up on the clutch pedal as you press the accelerator pedal.

You can shift into FIRST (1) when you are going less than 20 mph (32 km/h). If you have come to a complete stop and it is hard to shift into FIRST (1), put the shift lever in NEUTRAL and let up on the clutch. Press the clutch pedal back down. Then shift into FIRST (1).

SECOND (2): Press the clutch pedal as you let up on the accelerator pedal and shift into SECOND (2). Then, slowly let up on the clutch pedal as you press the accelerator pedal.

THIRD (3), FOURTH (4), FIFTH (5): Shift into THIRD (3), FOURTH (4) and FIFTH (5) the same way you do for SECOND (2). Slowly let up on the clutch pedal as you press the accelerator pedal.

To stop, let up on the accelerator pedal and press the brake pedal. Just before the vehicle stops, press the clutch pedal and the brake pedal, and shift to NEUTRAL.

NEUTRAL: Use this position when you start or idle your engine.

REVERSE (R): To back up, press down on the clutch pedal and shift into REVERSE (R). Let up on the clutch pedal slowly while pressing the accelerator pedal.

Notice: **Shifting to REVERSE (R) while your vehicle is moving forward could damage the transmission. The repairs would not be covered by your warranty. Shift to REVERSE (R) only after your vehicle is stopped.**

Also, use REVERSE (R) along with the parking brake for parking your vehicle.

Downloaded from www.Manualslib.com manuals search engine

Shift Speeds

⚠ CAUTION:

If you skip a gear when you downshift, you could lose control of your vehicle. You could injure yourself or others. Do not shift down more than one gear at a time when you downshift.

This chart shows when to shift to the next gear for the best fuel economy.

Manual Transmission Recommended Shift Speeds

Engine	1 to 2 or 2 to 1	2 to 3 or 3 to 2	3 to 4 or 4 to 3	4 to 5 or 5 to 4	5 to 6 or 6 to 5
1.8 L	15 mph 24 km/h	25 mph 40 km/h	40 mph 64 km/h	45 mph 72 km/h	—

If your speed drops below 20 mph (32 km/h), or if the engine is not running smoothly, you should downshift to the next lower gear. You may have to downshift two or more gears to keep the engine running smoothly or for good performance.

Parking Brake

To set the parking brake, hold the brake pedal down and pull up on the parking brake lever. If the ignition is on, the brake system warning light will come on.

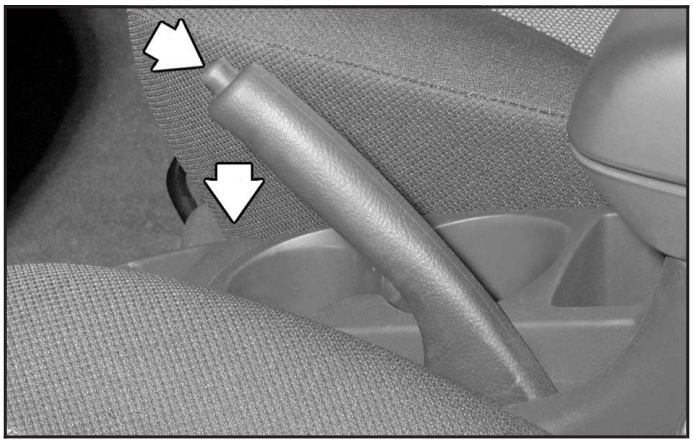

To release the parking brake, hold the brake pedal down. Pull the parking brake lever up until you can press the release button. Hold the release button in as you move the lever all the way down.

Notice: **Driving with the parking brake on can overheat the brake system and cause premature wear or damage to brake system parts. Make sure that the parking brake is fully released and the brake warning light is off before driving.**

Downloaded from www.Manualslib.com manuals search engine

If you are towing a trailer, see *Towing a Trailer on page 4-27*.

Shifting Into PARK (P) (Automatic Transmission)

⚠ CAUTION:

It can be dangerous to get out of your vehicle if the shift lever is not fully in PARK (P) with the parking brake firmly set. Your vehicle can roll. If you have left the engine running, the vehicle can move suddenly. You or others could be injured. To be sure your vehicle will not move, even when you are on fairly level ground, use the steps that follow. If you are pulling a trailer, see *Towing a Trailer on page 4-27*.

To shift into PARK (P), do the following:

1. Hold the brake pedal down with your right foot and set the parking brake. See *Parking Brake on page 2-27* for more information.
2. Move the shift lever into PARK (P) by holding in the button on the shift lever and pushing the lever all the way toward the front of the vehicle.
3. Turn the ignition key to LOCK/OFF.
4. Remove the key and take it with you. If you can leave your vehicle with the key in your hand, your vehicle is in PARK (P).

Downloaded from www.Manualslib.com manuals search engine

Leaving Your Vehicle With the Engine Running (Automatic Transmission)

⚠ CAUTION:

It can be dangerous to leave your vehicle with the engine running. Your vehicle could move suddenly if the shift lever is not fully in PARK (P) with the parking brake firmly set. And, if you leave the vehicle with the engine running, it could overheat and even catch fire. You or others could be injured. Do not leave your vehicle with the engine running.

If you have to leave your automatic transmission vehicle with the engine running, be sure your vehicle is in PARK (P) and your parking brake is firmly set before you leave it. After you have moved the shift lever into PARK (P), hold the regular brake pedal down. Then, see if you can move the shift lever away from PARK (P) without first pulling it toward you. If you can, it means that the shift lever was not fully locked into PARK (P).

Torque Lock (Automatic Transmission)

If you are parking on a hill and you do not shift into PARK (P) properly, the weight of the vehicle may put too much force on the parking pawl in the transmission. You may find it difficult to pull the shift lever out of PARK (P). This is called “torque lock.” To prevent torque lock, set the parking brake and then shift into PARK (P) properly before you leave the driver’s seat. To find out how, see *Shifting Into PARK (P) (Automatic Transmission) on page 2-28*.

When you are ready to drive, move the shift lever out of PARK (P) before you release the parking brake.

If torque lock does occur, you may need to have another vehicle push yours a little uphill to take some of the pressure from the parking pawl in the transmission, so you can pull the shift lever out of PARK (P).

Downloaded from www.Manualslib.com manuals search engine

Shifting Out of PARK (P)

Your vehicle has an automatic transmission shift lock control system. You have to fully apply your regular brakes before you can shift from PARK (P) when the ignition is in ON/RUN. See *Automatic Transmission Operation on page 2-23*.

If you cannot shift out of PARK (P), ease pressure on the shift lever – push the shift lever all the way into PARK (P) and release the shift lever button as you maintain brake application. Then press the shift lever button and move the shift lever into the gear you wish.

Shift Lock Release

If you ever hold the brake pedal down but still cannot shift out of PARK (P), try this:

1. Turn the ignition to LOCK/OFF. Make sure the parking brake is applied.

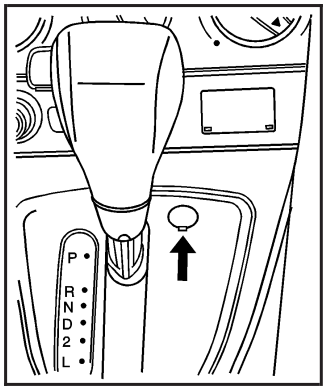

2. Carefully pry the cover from the shift lock override, located to the right of the shift lever.

3. Insert the end of a flat-tipped tool into the round slot and press down firmly.
4. While maintaining brake application, move the shift lever into the drive gear you want.
5. Have the vehicle fixed as soon as possible.

Downloaded from www.Manualslib.com manuals search engine

Parking Your Vehicle (Manual Transmission)

Before you get out of your vehicle, move the shift lever into REVERSE (R), and firmly apply the parking brake. Once the shift lever has been placed into REVERSE (R) with the clutch pedal pressed in, you can turn the ignition key to LOCK, remove the key and release the clutch.

If you are parking on a hill, or if your vehicle is pulling a trailer, see *Towing a Trailer on page 4-27*.

Evaporation Pump

Your vehicle is equipped with a vacuum pump for the vehicle's fuel evaporation system. This pump performs a fuel evaporation leakage test approximately five hours after the engine is turned off. You may hear a sound coming from underneath the rear cargo compartment for several minutes.

The noise is normal and does not signify a malfunction. See your dealer/retailer with any questions.

Parking Over Things That Burn

⚠ CAUTION:

Things that can burn could touch hot exhaust parts under your vehicle and ignite. Do not park over papers, leaves, dry grass, or other things that can burn.

Downloaded from www.Manualslib.com manuals search engine

Engine Exhaust

⚠ CAUTION:

Engine exhaust can kill. It contains the gas carbon monoxide (CO), which you cannot see or smell. It can cause unconsciousness and death.

You might have exhaust coming in if:

- **The exhaust system sounds strange or different.**
- **Your vehicle gets rusty underneath.**
- **Your vehicle was damaged in a collision.**
- **Your vehicle was damaged when driving over high points on the road or over road debris.**
- **Repairs were not done correctly.**
- **Your vehicle or the exhaust system has been modified improperly.**

If you ever suspect exhaust is coming into your vehicle:

- **Drive it only with all the windows down to blow out any CO; and**
- **Have your vehicle fixed immediately.**

Running the Engine While Parked

It is better not to park with the engine running. But if you ever have to, here are some things to know.

⚠ CAUTION:

Idling the engine with the climate control system off could allow dangerous exhaust into your vehicle. See the earlier caution under *Engine Exhaust on page 2-32*.

Also, idling in a closed-in place can let deadly carbon monoxide (CO) into your vehicle even if the climate control fan is at the highest setting. One place this can happen is a garage. Exhaust — with CO — can come in easily. NEVER park in a garage with the engine running.

Another closed-in place can be a blizzard. See *Winter Driving on page 4-15*.

Downloaded from www.Manualslib.com manuals search engine

⚠ CAUTION:

It can be dangerous to get out of your vehicle if the shift lever is not fully in PARK (P) with the parking brake firmly set. Your vehicle can roll. Do not leave your vehicle when the engine is running unless you have to. If you have left the engine running, the vehicle can move suddenly. You or others could be injured.
To be sure your vehicle will not move, even when you are on fairly level ground, always set the parking brake and move the shift lever to PARK (P).

Follow the proper steps to be sure your vehicle will not move. See *Shifting Into PARK (P) (Automatic Transmission) on page 2-28*.

If you are parking on a hill and if you are pulling a trailer, also see *Towing a Trailer on page 4-27*.

Mirrors

Manual Rearview Mirror

When you are sitting in a comfortable driving position, adjust the mirror so you can see clearly behind your vehicle. Grip the mirror in the center to move it up or down and side to side. The day/night adjustment allows you to adjust the mirror to avoid glare from the lamps behind you. Push the tab forward for daytime use and pull it for nighttime use.

The mirror may have lights located on the bottom of the mirror. Press the button next to each light to turn it on or off.

Manual Rearview Mirror with OnStar®

When you are sitting in a comfortable driving position, adjust the mirror so you can see clearly behind your vehicle. Hold the mirror in the center to move it up or down and side to side. The day/night adjustment allows you to adjust the mirror to avoid glare from the lamps behind you. Move the lever to the right for nighttime use and to the left for daytime use.

There may also be three OnStar® buttons located at the bottom of the mirror face. See your dealer/retailer for more information on the system and how to subscribe to OnStar®. See *OnStar® System on page 2-35* for more information on the services OnStar® provides.

Downloaded from www.Manualslib.com manuals search engine

Automatic Dimming Rearview Mirror

While sitting in a comfortable driving position, adjust the mirror so you can see clearly behind your vehicle. Hold the mirror in the center to move it up or down and side to side.

The mirror may have an automatic dimming feature that darkens gradually to reduce the glare of headlamps from behind. When the ignition key is inserted and turned on, the inside rear view mirror always turns on in the automatic function mode. **An indicator light located on the mirror will come on to show you that the function is on**. When the inside air temperature is low, it may take a little longer for the mirror to darken in response to the detection of headlights.

Press the AUTO button located in the lower center of the mirror to turn automatic dimming on and the ○ (off) button located next to the AUTO button to turn automatic dimming off.

One photocell on the front of the mirror senses when it is becoming dark outside. Another photocell, facing rearward, senses headlamps behind you.

To keep the photocells operating well, occasionally clean them with a cotton swab and glass cleaner.

Outside Remote Control Mirrors

Your vehicle has outside power adjustable mirrors.

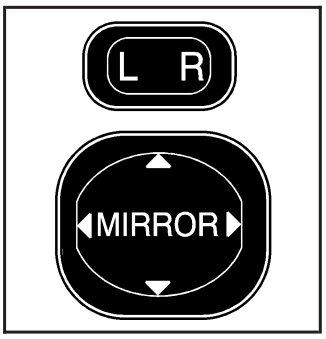

The controls are located to the left of the steering wheel on the instrument panel.

To adjust either mirror, push the button labeled L (left) or R (right). Use the arrows on the control pad to adjust the direction of the mirror. Once both mirrors have been adjusted, move the selector switch back to the center. This prevents the mirrors from being moved once they have been adjusted.

Downloaded from www.Manualslib.com manuals search engine

Outside Convex Mirror

⚠ CAUTION:

A convex mirror can make things (like other vehicles) look farther away than they really are. If you cut too sharply into the right lane, you could hit a vehicle on your right. Check your inside mirror or glance over your shoulder before changing lanes.

The passenger side mirror is convex. A convex mirror's surface is curved so more can be seen from the driver seat. It also makes things, like other vehicles, look farther away than they really are.

OnStar® System

OnStar uses several innovative technologies and live advisors to provide you with a wide range of safety, security, information, and convenience services. If your airbags deploy, the system is designed to make an automatic call to OnStar Emergency advisors who can request emergency services be sent to your location. If you lock your keys in the vehicle, call OnStar at 1-888-4-ONSTAR and they can send a signal to unlock your doors. If you need roadside assistance, press the OnStar button and they can contact Roadside Service for you.

Downloaded from www.Manualslib.com manuals search engine

OnStar service is provided to you subject to the OnStar Terms and Conditions. You may cancel your OnStar service at any time by contacting OnStar. A complete OnStar Owner's Guide and the OnStar Terms and Conditions are included in the vehicle's OnStar Subscriber glove box literature. For more information, visit onstar.com or onstar.ca, contact OnStar at 1-888-4-ONSTAR (1-888-466-7827) or TTY 1-877-248-2080, or press the OnStar button to speak with an OnStar advisor 24 hours a day, 7 days a week.

Not all OnStar features are available on all vehicles. To check if your vehicle is equipped to provide the services described below, or for a full description of OnStar services and system limitations, see the OnStar Owner's Guide in your glove box or visit onstar.com.

OnStar Services

For new vehicles equipped with OnStar, the Safe & Sound Plan, or the Directions & Connections Plan is included for one year from the date of purchase. You can extend this plan beyond the first year, or upgrade to the Directions & Connections Plan. For more information, press the OnStar button to speak with an advisor. Some OnStar services (such as Remote Door Unlock or Stolen Vehicle Location Assistance) may not be available until you register with OnStar.

Available Services with Safe & Sound Plan

- Automatic Notification of Airbag Deployment
- Advanced Automatic Crash Notification (AACN) (If equipped)
- Link to Emergency Services
- Roadside Assistance
- Stolen Vehicle Location Assistance
- AccidentAssist
- Remote Door Unlock/Vehicle Alert
- OnStar Vehicle Diagnostics
- GM Goodwrench® On Demand Diagnostics
- OnStar Hands-Free Calling with 30 complimentary minutes
- OnStar Virtual Advisor (U.S. Only)

Available Services included with Directions & Connections Plan

- All Safe and Sound Plan Services
- Driving Directions - Advisor delivered or OnStar Turn-by-Turn Navigation (If equipped)
- RideAssist
- Information and Convenience Services

Downloaded from www.Manualslib.com manuals search engine

OnStar Hands-Free Calling

OnStar Hands-Free Calling allows eligible OnStar subscribers to make and receive calls using voice commands. Hands-Free Calling is fully integrated into the vehicle, and can be used with OnStar Pre-Paid Minute Packages. Hands-Free Calling may also be linked to a Verizon Wireless service plan in the U.S. or a Bell Mobility service plan in Canada, depending on eligibility. To find out more, refer to the OnStar Owner's Guide in the vehicle's glove box, visit www.onstar.com or www.onstar.ca, or speak with an OnStar advisor by pressing the OnStar button or calling 1-888-4-ONSTAR (1-888-466-7827).

OnStar Virtual Advisor

OnStar Virtual Advisor is a feature of OnStar Hands-Free Calling that uses your minutes to access location-based weather, local traffic reports, and stock quotes. By pressing the phone button and giving a few simple voice commands, you can browse through the various topics. See the OnStar Owner's Guide for more information. (Only available in the continental U.S.)

OnStar Steering Wheel Controls

Your vehicle may be equipped with a Talk/Mute button that can be used to interact with OnStar Hands-Free Calling.

On some vehicles, you may have to hold the button for a few seconds and give the command "ONSTAR" in order to activate the OnStar Hands-Free Calling feature.

On some vehicles, the mute button can be used to dial numbers into voicemail systems, or to dial phone extensions. See the OnStar Owner's Guide for more information.

Downloaded from www.Manualslib.com manuals search engine

How OnStar Service Works

In order to provide you with OnStar services, your vehicle's OnStar system has the capability of recording and transmitting vehicle information. This information is automatically sent to an OnStar Call Center at the time of an OnStar button press, Emergency button press or if your airbags or AACN system deploys. The vehicle information usually includes your GPS location and, in the event of a crash, additional information regarding the accident that your vehicle has been involved in (e.g. the direction from which your vehicle was hit). When you use the Virtual Advisor feature of OnStar Hands-Free Calling, your vehicle also sends OnStar your GPS location so that we can provide you with location-based services.

OnStar service cannot work unless your vehicle is in a place where OnStar has an agreement with a wireless service provider for service in that area. OnStar service also cannot work unless you are in a place where the wireless service provider OnStar has hired for that area has coverage, network capacity and reception when the service is needed, and technology that is compatible with the OnStar service. Not all services are available everywhere, particularly in remote or enclosed areas, or at all times.

OnStar service that involves location information about your vehicle cannot work unless GPS satellite signals are unobstructed and available in that place as well.

Your vehicle must have a working electrical system (including adequate battery power) for the OnStar equipment to operate. There are other problems OnStar cannot control that may prevent OnStar from providing OnStar service to you at any particular time or place. Some examples are damage to important parts of your vehicle in an accident, hills, tall buildings, tunnels, weather or wireless phone network congestion.

Your Responsibility

You may need to increase the volume of your radio to hear the OnStar advisor. If the light next to the OnStar buttons is red, this means that your system is not functioning properly and should be checked by a dealer. If the light appears clear (no light is appearing), your OnStar subscription has expired. You can always press the blue OnStar button to confirm that your OnStar equipment is active.

Downloaded from www.Manualslib.com manuals search engine

Storage Areas

Glove Box

To open the glove box, lift up on the lever.

Cupholder(s)

There are two fixed cupholders located in the console area between the two front seats. There are also two cupholders that fold out of the rear of the console storage unit.

Coinholder(s)

Your instrument panel may have a coinholder located to the left of the steering wheel and on the center console near the parking brake.

Instrument Panel Storage

There are storage compartments located on the instrument panel in two places. They are below the interior/instrument panel brightness dial and below the shift lever. Pull the top of the door toward you to open it or for the compartment below the shift lever, push the button to open it.

Center Console Storage

A storage area is located in the console between the seats.

To access the storage area, pull up the lock release lever while raising the lid.

Floor Mats

The driver's side floor mat is held in place by two locator hooks.

Be sure the driver's side floor mat is properly placed on the floor so that it does not block the movement of the accelerator pedal.

Downloaded from www.Manualslib.com manuals search engine

How to Remove and Replace the Floor Mat

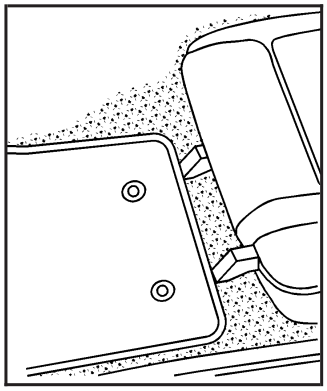

To remove the floor mat, pull up on the rear of the mat to disconnect it from the locator hooks.

To reinstall the floor mat, line up the openings in the floor mat over the locator hooks and push down into place.

Luggage Carrier

⚠ CAUTION:

If you try to carry something on top of your vehicle that is longer or wider than the luggage carrier — like paneling, plywood, a mattress and so forth — the wind can catch it as you drive along. This can cause you to lose control. What you are carrying could be violently torn off, and this could cause you or other drivers to have a collision, and of course damage your vehicle. You may be able to carry something like this inside. But, never carry something longer or wider than the luggage carrier on top of your vehicle.

The luggage carrier has sliding crossrails and side rails that are attached to the roof to secure cargo.

Use accessory racks that are compatible with your luggage carrier. These are available through your dealer/retailer.

Downloaded from www.Manualslib.com manuals search engine

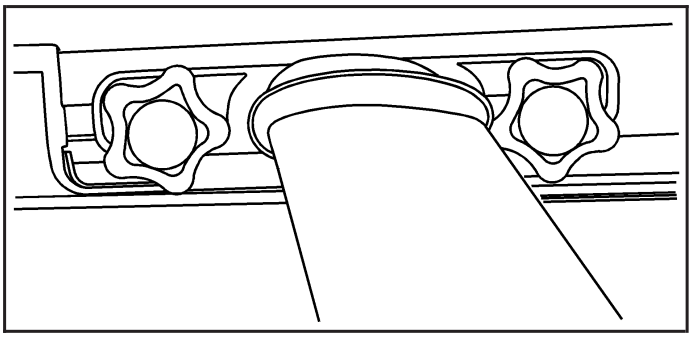

To adjust the position of the crossrails, do the following:

1. Turn the knobs counterclockwise to loosen the crossrails.
2. Slide the crossrails to the desired position for loading the luggage.
   Do not move the rear crossrail any closer than eight inches from the antenna base in order to avoid loss of radio reception.
3. After adjusting the crossrails, be sure to tighten all the knobs by turning them clockwise.

Notice: **Loading cargo on the luggage carrier that weighs more than 150 lbs (68 kg) or hangs over the rear or sides of the vehicle may damage your vehicle. Load cargo so that it rests on the slats as far forward as possible and against the side rails, making sure to fasten it securely.**

Do not exceed the maximum vehicle capacity when loading your vehicle. For more information on vehicle capacity and loading, see *Loading Your Vehicle on page 4-19*.

To prevent damage or loss of cargo as you are driving, check to make sure the luggage carrier and cargo are still securely fastened.

Rear Storage Area

A storage area is located under the rear cargo area floor panel.

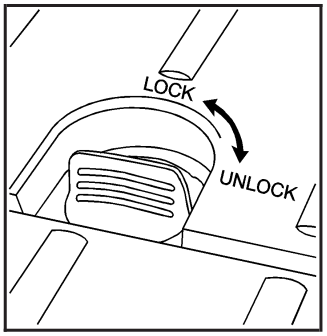

Turn the knobs on the floor panel to unlock the storage area access cover.

Be sure to lock the access cover to close it securely.

Downloaded from www.Manualslib.com manuals search engine

Rear Cargo Accessory Track System

Your vehicle has a track system located on the floor of the rear cargo area. This system can be used to carry accessories in your vehicle in many ways by using the tie-down anchors provided in your vehicle or accessory packages available from your dealer/retailer.

Make sure the cargo being carried in the rear cargo area is secure. See *Loading Your Vehicle on page 4-19*.

Cargo Cover

To use the cargo cover, loosen the straps and attach the side hooks of the cargo cover to the upper tie down hooks located along both sides of the rear cargo area. Pull straps to adjust.

⚠ CAUTION:

An improperly stored cargo cover could be thrown about the vehicle during a collision or sudden maneuver. You or others could be injured. If you remove the cover, always store it in the proper storage location. When you put it back, always be sure that it is securely reattached.

Cargo Tie Downs

The tire tie-down straps are designed to secure a flat tire. You can also use the straps and hooks to secure your luggage.

There are eight tie-down hooks located in the rear of the vehicle. The straps are located under the cargo area floor panel. To use the straps, hook the ends to the lower tie-down hooks in a criss-cross pattern across the cargo. Pull on the straps at the buckle to tighten the straps as needed.

Downloaded from www.Manualslib.com manuals search engine

Sunroof

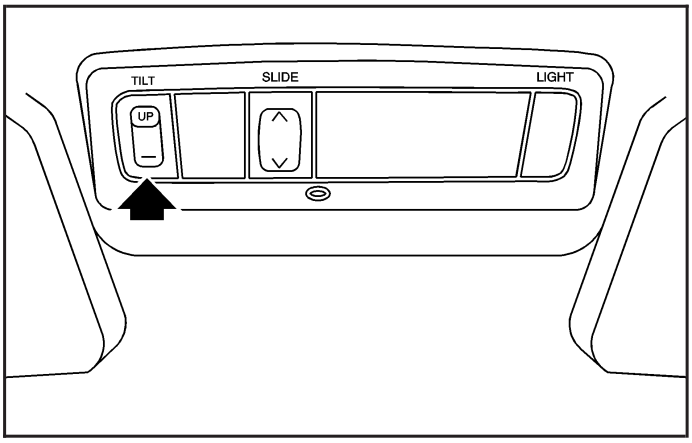

If the vehicle has a sunroof, it can be opened or put in a tilt position. To tilt the sunroof, slide the sunshade rearward, then press the switch marked UP. Press the other end of the switch to lower the sunroof. The ignition must be in the ON position for the switch to work.

To open or close the sunroof, press the switch marked SLIDE rearward or forward. The sunroof will close partially and stop. Once the sunroof stops, release the switch and press the button again to fully close it. The sunroof can be opened to any position. The sunshade will open when the sunroof is opened. The sunshade must be closed manually.

Downloaded from www.Manualslib.com manuals search engine

✍ NOTES

Downloaded from www.Manualslib.com manuals search engine

Section 3 Instrument Panel

Instrument Panel Overview 3-4
Hazard Warning Flashers 3-6
Other Warning Devices 3-6
Horn 3-6
Tilt Wheel 3-7
Turn Signal/Multifunction Lever 3-7
Turn and Lane-Change Signals 3-8
Headlamp High/Low-Beam Changer 3-8
Flash-to-Pass 3-8
Windshield Wipers 3-9
Windshield Washer 3-10
Rear Window Wiper/Washer 3-10
Cruise Control 3-11
Exterior Lamps 3-14
Headlamps on Reminder 3-15
Daytime Running Lamps (DRL) 3-15
Automatic Headlamp System 3-16
Fog Lamps 3-16
Instrument Panel Brightness 3-16
Interior Lamps Control 3-17
Entry Lighting 3-17
Reading Lamps 3-17
Accessory Power Outlet(s) 3-18
Power Outlet 115 Volt Alternating Current 3-18
Ashtray(s) and Cigarette Lighter 3-19

Climate Controls 3-20
Climate Control System 3-20
Outlet Adjustment 3-22
Passenger Compartment Air Filter 3-23

Warning Lights, Gages, and Indicators 3-25
Instrument Panel Cluster 3-26
Speedometer and Odometer 3-27
Trip Odometers 3-27
Tachometer 3-28
Safety Belt Reminders 3-28
Airbag Readiness Light 3-29
Passenger Airbag Status Indicator 3-30
Charging System Light 3-32
Brake System Warning Light 3-32
Antilock Brake System Warning Light 3-33
Low Tire Pressure Warning Light 3-34
Traction Control System (TCS)
Warning Light 3-34
StabiliTrak® Indicator Light 3-35
Engine Coolant Temperature Gage 3-35

Downloaded from www.Manualslib.com manuals search engine

Section 3 Instrument Panel

Malfunction Indicator Lamp 3-36
Oil Pressure Light 3-38
Lights On Reminder 3-39
Taillamp Indicator Light 3-39
Cruise Control Light 3-39
Overdrive Off Light 3-39
Highbeam On Light 3-40
Low Washer Fluid Warning Light 3-40
Door Ajar Light 3-40
Fuel Gage 3-41
Low Fuel Warning Light 3-42

Audio System(s) 3-42
Setting the Time 3-43
Radio(s) 3-44
Using an MP3 3-58
XM Radio Messages 3-63
Radio Reception 3-63
Fixed Mast Antenna 3-64
XM™ Satellite Radio Antenna System 3-64

Downloaded from www.Manualslib.com manuals search engine

✍ NOTES

Downloaded from www.Manualslib.com manuals search engine

Instrument Panel Overview

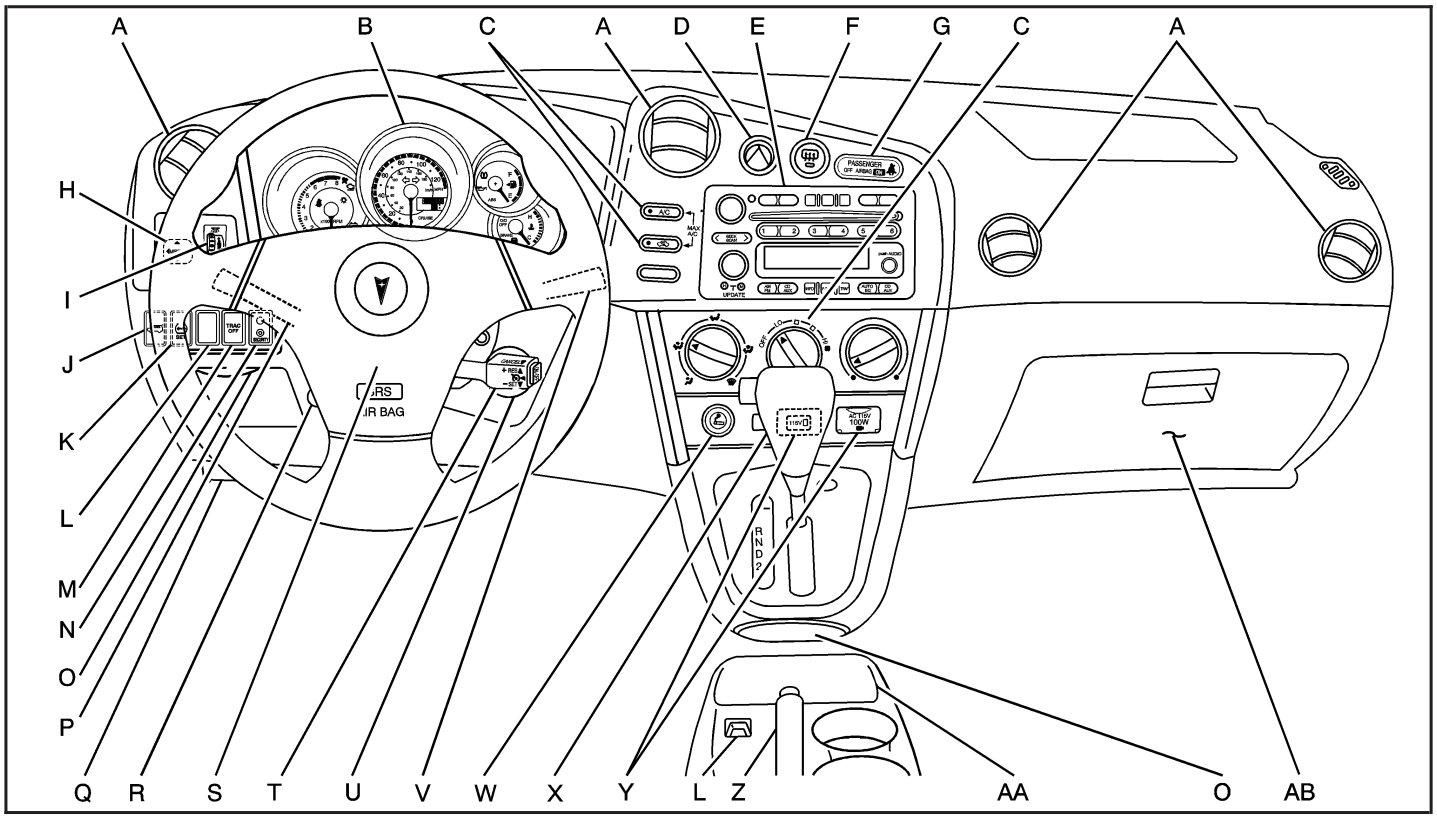

Downloaded from www.Manualslib.com manuals search engine

The main components of your instrument panel are the following:

A. Air Outlets. See *Outlet Adjustment on page 3-22*.

B. Instrument Panel Cluster. See *Instrument Panel Cluster on page 3-26*.

C. Climate Control System. See *Climate Control System on page 3-20*.

D. Hazard Warning Flasher Button. See *Hazard Warning Flashers on page 3-6*.

E. Audio System. See *Audio System(s) on page 3-42*.

F. Rear Window Defogger Button. See “Rear Window Defogger” under *Climate Control System on page 3-20*.

G. Passenger Airbag Status Indicator. See *Passenger Airbag Status Indicator on page 3-30*. Front Passenger Safety Belt Reminder Light. See *Safety Belt Reminders on page 3-28*.

H. Power Remote Control Mirror Button. See *Outside Remote Control Mirrors on page 2-34*.

I. Instrument Panel Brightness Control. See *Instrument Panel Brightness on page 3-16*.

J. Rear Liftglass Release Button. See *Liftgate/Liftglass on page 2-10*.

K. Tire Pressure Monitor Reset Button. See *Tire Pressure Monitor System on page 5-57*.

L. Coinholder. See *Coinholder(s) on page 2-39*.

M. TRAC OFF Button. See *Traction Control System (TCS) on page 4-6*.

N. Content Theft-Deterrent Security Light. See *Content Theft-Deterrent on page 2-16*.

O. Storage Compartment. See *Instrument Panel Storage on page 2-39*.

P. Turn Signal/Multifunction Lever and Exterior Lamp Stalk. See *Turn Signal/Multifunction Lever on page 3-7* and *Exterior Lamps on page 3-14*.

Q. Hood Release. See *Hood Release on page 5-10*.

R. Tilt Lever. See *Tilt Wheel on page 3-7*.

S. Horn. See *Horn on page 3-6*.

T. Cruise Control Lever (Option). See *Cruise Control on page 3-11*.

U. Ignition Switch. See *Ignition Positions on page 2-19*.

V. Windshield Wiper Lever. See *Windshield Wipers on page 3-9*.

W. Cigarette Lighter or Accessory Power Outlet. See *Ashtray(s) and Cigarette Lighter on page 3-19* or *Accessory Power Outlet(s) on page 3-18*.

X. Shift Lever. See *Automatic Transmission Operation on page 2-23* or *Manual Transmission Operation on page 2-26*.

Downloaded from www.Manualslib.com manuals search engine

Y. Power Outlet. See *Power Outlet 115 Volt Alternating Current on page 3-18*.

Z. Parking Brake. See *Parking Brake on page 2-27*.

AA. Center Console Storage Area. See *Center Console Storage on page 2-39*.

AB. Glove Box. See *Glove Box on page 2-39*.

Hazard Warning Flashers

The hazard warning flashers let you warn the police and others that you have a problem. The front and rear turn signal lamps will flash on and off.

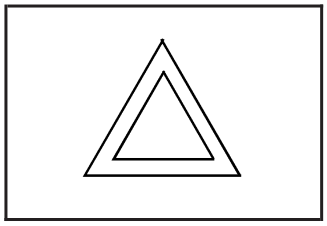

The hazard warning flasher button is located towards the center of the instrument panel.

Press the button to make the front and rear turn signal lamps flash on and off. Press the button again to turn the flashers off.

While the hazard warning flashers are on, the turn signals do not work.

The hazard warning flashers work no matter what position the key is in, and even if the key is not in the ignition switch.

Other Warning Devices

If you carry reflective triangles, you can set them up at the side of the road about 300 feet (100 m) behind your vehicle.

Horn

Press near or on the horn symbols on the steering wheel pad to sound the horn.

Downloaded from www.Manualslib.com manuals search engine

Tilt Wheel

A tilt steering column allows you to adjust the steering column before you drive. You can also raise it to the highest level to give your legs more room when you exit and enter the vehicle.

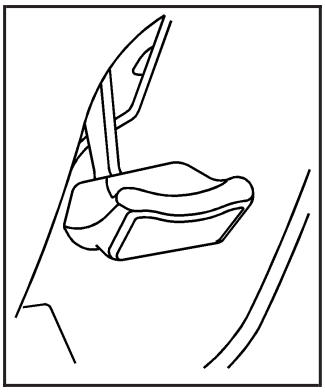

The tilt lever is located underneath, on the left side of the steering wheel column.

To tilt the column, move the lever downward. Adjust the steering wheel to a comfortable position, then move the lever upward to lock the column in place.

Turn Signal/Multifunction Lever

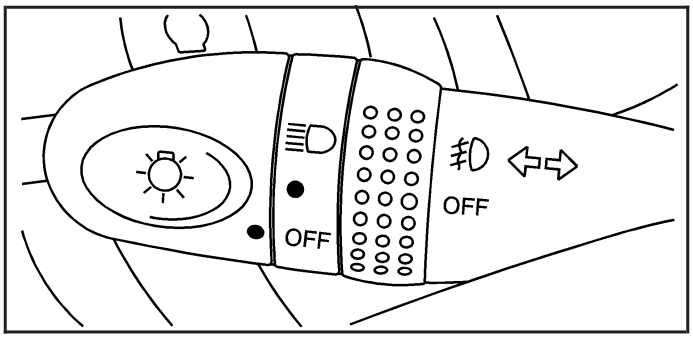

The turn signal/multifunction lever is located on the left side of the steering column.

This lever operates the following:

- Exterior Lamps. See *Exterior Lamps on page 3-14*.
- Turn and Lane-Change Signals. See *Turn and Lane-Change Signals on page 3-8*.
- Headlamp High/Low-Beam Changer. See *Headlamp High/Low-Beam Changer on page 3-8*.
- Flash-to-Pass. See *Flash-to-Pass on page 3-8*.
- Fog Lamps. See *Fog Lamps on page 3-16*.

Downloaded from www.Manualslib.com manuals search engine

Turn and Lane-Change Signals

The turn signal has an upward (for right) and a downward (for left) position. These positions allow you to signal a turn or a lane change.

To signal a turn, move the lever all the way up or down. When the turn is finished, the lever will return automatically.

To signal a lane change, raise or lower the lever until the arrow starts to flash. Hold it there until you complete your lane change. The lever will return by itself when you release it.

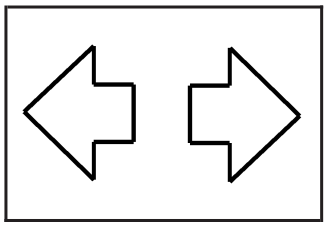

An arrow on the instrument panel cluster will flash in the direction of the turn or lane change.

If you signal a turn or a lane change and notice the arrow flashing rapidly, a signal bulb may be burned out and other drivers will not see your turn signal.

If a bulb is burned out, have it replaced to help avoid an accident. If the arrows do not go on at all when you signal a turn, check for burned-out bulbs and then check the fuse. See *Fuses and Circuit Breakers on page 5-91*.

Headlamp High/Low-Beam Changer

The headlamps must be on for this feature to work. For high beams, push the turn signal lever away from you.

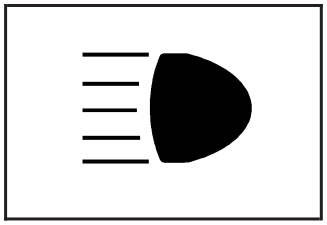

When the high beams are on, this light on the instrument panel cluster also will be on.

It will go off when you switch to the low beams. To switch back to low beams, pull the lever toward you.

Flash-to-Pass

With the lever in the low-beam position, pull the lever toward you to momentarily switch to high beams (to signal that you are going to pass). If you have the headlamps on when you release the lever, they will return to the low beams.

Downloaded from www.Manualslib.com manuals search engine

Windshield Wipers

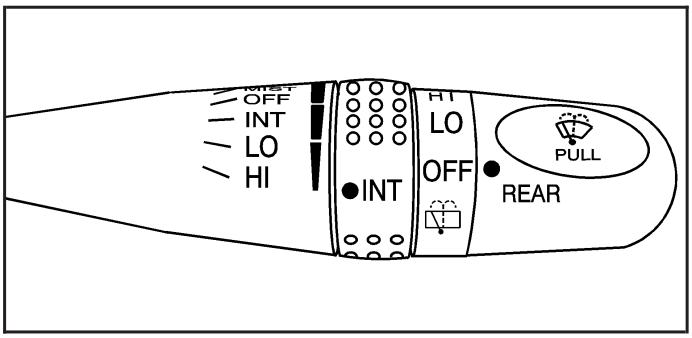

The lever on the right side of the steering column controls the windshield wipers and washer.

Move the lever to one of the following positions:

MIST: Move the lever to MIST, for a single wiping cycle. Hold it there until the wipers start, then let go. The wipers will stop after one wipe.

OFF: Move the lever to this position to turn the wipers off.

INT (Intermittent): Move the lever to INT to choose a delayed wiping cycle. The time between wipes can be changed by turning the INT band. Turn the band forward or rearward for a longer or shorter delay interval. This position is useful in light rain or snow, rather than continuous wiping.

LO (Low): Move the lever to LO for steady wiping at low speed.

HI (High): Move the lever to HI for steady wiping at high speed.

REAR: Turn the end of the lever upward to LO or HI, to turn on the rear window wiper. The wiper does not work with the rear liftglass open.

Be sure to clear ice and snow from the wiper blades before using them. If they are frozen to the windshield, carefully loosen or thaw them. If the blades become damaged, get new blades or blade inserts.

Heavy snow or ice can overload the wipers. A circuit breaker stops them until the motor cools. Clear away snow or ice to prevent an overload.

Downloaded from www.Manualslib.com manuals search engine

Windshield Washer

Pull the lever toward you to spray washer fluid on the windshield. The spray will continue until you release the lever. The wipers will run a few times. See *Windshield Washer Fluid on page 5-34*.

The knob automatically returns from the position after you release it.

⚠ CAUTION:

In freezing weather, do not use your washer until the windshield is warmed. Otherwise the washer fluid can form ice on the windshield, blocking your vision.

Rear Window Wiper/Washer

Turn the knob up or down as far as it will go, to squirt washer fluid on the rear window. The knob automatically returns from these positions after it is released.

The rear window washer uses the same fluid bottle as the windshield washer. However, the rear window washer will run out of fluid before the windshield washer. If you can wash the windshield but not the rear window, check the fluid level.

⚠ CAUTION:

In freezing weather, do not use your washer until the windshield is warmed. Otherwise the washer fluid can form ice on the windshield, blocking your vision.

Downloaded from www.Manualslib.com manuals search engine

Cruise Control

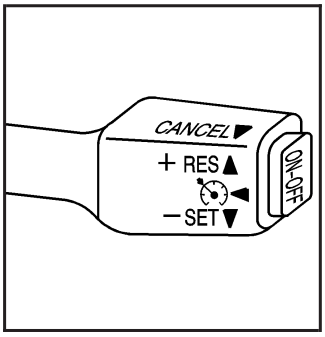

If your vehicle has cruise control, the lever is located on the right side of the steering wheel.

Cruise control, lets you maintain a speed of 25 mph (40 km/h) or more without keeping your foot on the accelerator. This can really help on long trips. Cruise control does not work at speeds below 25 mph (40 km/h).

⚠ CAUTION:

Cruise control can be dangerous where you cannot drive safely at a steady speed. So, do not use your cruise control on winding roads or in heavy traffic.

Cruise control can be dangerous on slippery roads. On such roads, fast changes in tire traction can cause excessive wheel slip, and you could lose control. Do not use cruise control on slippery roads.

Downloaded from www.Manualslib.com manuals search engine

Setting Cruise Control

⚠ CAUTION:

If you leave your cruise control on when you are not using cruise, you might hit a button and go into cruise when you do not want to. You could be startled and even lose control. Keep the cruise control switch off until you want to use cruise control.

1. Press the ON-OFF button at the end of the cruise control lever. The CRUISE light on the instrument panel cluster comes on. See *Cruise Control Light on page 3-39* for more information.
2. Get up to the desired speed.
3. Move the lever down to –SET and release it.
4. Take your foot off the accelerator pedal.

Resuming a Set Speed

Suppose the cruise control is set at a desired speed and then you apply the brake. This shuts off cruise control. But you do not need to reset it.

If the vehicle speed is 25 mph (40 km/h) or greater, push the lever up to +RES (Resume/Accelerate). The vehicle returns to the previously set speed and stays there.

Increasing Speed While Using Cruise Control

There are three ways to go to a higher speed:

- Use the accelerator pedal to get to the higher speed. Move the lever down to –SET. Release the lever and the accelerator pedal. You will now cruise at the higher speed.
- Move the cruise lever up to +RES. Hold it there until you get up to the speed desired, and then release the lever.
- To increase the vehicle speed in very small amounts, move the lever to +RES briefly and then release it. Each time this is done, the vehicle goes about 1 mph (1.6 km/h) faster.

Downloaded from www.Manualslib.com manuals search engine

Reducing Speed While Using Cruise Control

There are two ways to reduce your speed while using cruise control:

- Push and hold the lever to –SET until you reach the lower speed desired, then release it.
- To slow down in very small amounts, push the lever down briefly. Each time this is done, the vehicle will go about 1 mph (1.6 km/h) slower.

Passing Another Vehicle While Using Cruise Control

Use the accelerator pedal to increase the vehicle speed. When you take your foot off the pedal, the vehicle slows down to the cruise control speed you set earlier.

Using Cruise Control on Hills

How well the cruise control works on hills depends upon the vehicle speed, load, and the steepness of the hills.

When going up steep hills, you might have to step on the accelerator pedal to maintain the vehicle speed.

When going downhill, you might have to brake or shift to a lower gear to keep the vehicle speed down. Of course, applying the brake or downshifting to SECOND (2) or LOW (L) turns off the cruise control. Many drivers find this to be too much trouble and do not use cruise control on steep hills.

Ending Cruise Control

There are several ways to turn off the cruise control:

- Step lightly on the brake pedal or push the clutch pedal, if you have a manual transaxle.
- Press the ON-OFF button again.
- Pull the cruise control lever toward you.

Erasing Speed Memory

When you turn off the cruise control or the ignition, the cruise control set speed memory is erased.

Downloaded from www.Manualslib.com manuals search engine

Exterior Lamps

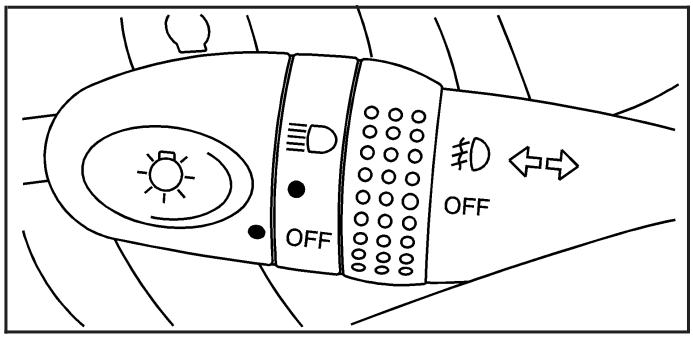

The lever on the left side of the steering column operates the exterior lamps.

(Exterior Lamps): Turn the outside part of the lever with the symbol on it, to operate the lamps. For vehicles sold in the U. S., this symbol will appear on the instrument panel cluster when your exterior lamps are on.

The exterior lamp switch has three positions:

OFF: Turning the switch to this position turns off all lamps, except the Daytime Running Lamps (DRL).

● **(Parking Lamps):** Turning the switch to this position turns on the parking lamps together with the following:

- Sidemarker Lamps
- Taillamps
- License Plate Lamp
- Instrument Panel Lights

A symbol will appear on the instrument panel cluster when your parking lamps are on. See *Lights On Reminder on page 3-39* and *Taillamp Indicator Light on page 3-39* for additional information.

(Headlamps): Turning the switch to this position turns on the headlamps, together with the previously listed lamps and lights.

Downloaded from www.Manualslib.com manuals search engine

Headlamps on Reminder

If you turn the ignition to LOCK or ACC and leave the lamps on, you will hear a tone when you open the driver's door.

Daytime Running Lamps (DRL)

Daytime Running Lamps (DRL) can make it easier for others to see the front of your vehicle during the day. DRL can be helpful in many different driving conditions, but they can be especially helpful in the short periods after dawn and before sunset. Fully functional daytime running lamps are required on all vehicles first sold in Canada.

The DRL system will make the headlamps come on at a reduced brightness when the following conditions are met:

- The ignition is on with the engine running.
- The exterior lamps switch is off.
- The parking brake is released.

When the DRL are on, only the headlamps will be on at a reduced brightness. The taillamps, sidemarker and other lamps will not be on. The instrument panel will not be lit up either.

When you turn the exterior lamp switch to the headlamp position, the DRL will go off and the headlamps will come on. The other lamps that come on with the headlamps will also come on.

When it begins to get dark, the headlamps will automatically switch from DRL to the regular headlamps. See "Automatic Headlamp System" following.

When you turn the exterior lamp switch off, the regular lamps will go off and the headlamps will change to the reduced brightness of DRL provided it is not dark outside. DRL also comes on if only the parking lamps are being used.

Downloaded from www.Manualslib.com manuals search engine

Automatic Headlamp System

Your vehicle has an automatic light sensor on the top left corner of the instrument panel, so be sure it is not covered or the headlamps will be on continuously.

When it is dark enough outside, the automatic headlamp system will turn on the low-beam headlamps at the normal brightness along with other lamps such as the taillamps, sidemarker, parking lamps and instrument panel lights. This is indicated by the headlamp symbol on your instrument panel cluster. See *Instrument Panel Cluster on page 3-26*.

If you are driving through a parking garage, overcast weather, or a tunnel, the automatic headlamp system may turn on the low-beam headlamps at a normal brightness along with the taillamps, sidemarker, parking lamps and the instrument panel lights. The radio lights will be dimmer, and the instrument panel cluster lights may dim. There will be a delay before the lights will turn on when starting the car at night.

Fog Lamps

(Fog Lamps): Turn the band on the turn signal/multifunction lever to the fog lamp symbol to turn the fog lamps on. They will come on only when the headlamps are on low beam.

Some localities have laws that require the headlamps to be on along with the fog lamps.

Instrument Panel Brightness

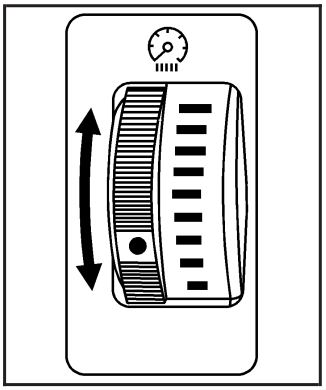

The instrument panel brightness control is located to the left of the steering wheel on the instrument panel. Turn the wheel on the left of the control up or down to increase or decrease brightness.

Turn the wheel all the way up for the maximum setting. It is recommended that the brightness level be kept at the maximum setting for all daytime driving to ensure proper visibility.

The brightness of the instrument panel lights will decrease when the headlamps are on.

Downloaded from www.Manualslib.com manuals search engine

Interior Lamps Control

The interior lights control is located on the overhead light. To change the interior lights setting, slide the switch to one of the following positions:

OFF: This position turns the light off.

ON: This position keeps the light on all the time.

Door: This position turns the light on when any door, the liftgate or the liftglass is opened. The light goes off when all the side doors, the liftgate and the liftglass are closed.

Entry Lighting

While the interior lights control is in the door position, the light will come on when any side door, the liftgate or the liftglass is opened. After all the doors, liftgate and liftglass are closed, and the key is out of the ignition, in LOCK or ACC, the light will remain on for about 15 seconds and then go out except under the following conditions:

- The ignition is turned to ACC or ON after all the doors, the liftgate and the liftglass are closed.
- All the doors and liftgate are locked when the liftglass is closed and the light is still on.

When any door is unlocked with the key or remote keyless entry system transmitter, the light comes on for 15 seconds, even if the door is not opened.

Reading Lamps

If your vehicle has a sunroof, there will be a reading lamp near the sunroof switch. Press the button to turn the lamp on and press it again to turn it off.

If your vehicle does not have a sunroof, the vehicle's inside rearview mirror may have reading lamps. If your vehicle has reading lamps, there are two buttons located on the bottom of the mirror. Press the buttons to turn the lamps on and press them again to turn the lamps off.

Downloaded from www.Manualslib.com manuals search engine

Accessory Power Outlet(s)

With the accessory power outlet, you can plug in auxiliary electrical equipment.

Your vehicle has an outlet under the climate controls.

To use the outlet, the ignition must be in ON or ACC. Pull down the small cover to access the outlet.

Notice: **Leaving electrical equipment on for extended periods will drain the battery. Always turn off electrical equipment when not in use and do not plug in equipment that exceeds the maximum amperage rating.**

This circuit is protected by a fuse and has a maximum current level. Do not use equipment exceeding the maximum amperage rating.

Certain power accessory plugs may not be compatible to the power accessory outlet and could result in blown vehicle or adapter fuses. If you experience a problem see your dealer for additional information on the power accessory plugs.

Notice: **Adding any electrical equipment to your vehicle may damage it or keep other components from working as they should. The repairs would not be covered by your warranty. Do not use equipment exceeding maximum amperage rating of 20 amperes. Check with your dealer/retailer before adding electrical equipment.**

When adding electrical equipment, be sure to follow the proper installation instructions included with the equipment.

Notice: **Improper use of the power outlet can cause damage not covered by your warranty. Do not hang any type of accessory or accessory bracket from the plug because the power outlets are designed for accessory power plugs only.**

Power Outlet 115 Volt Alternating Current

With this power outlet, you can plug in auxiliary electrical equipment with a maximum limit of 115 VAC. If you try to use equipment that requires more than the limit, a protection circuit will cut the power supply. The power will automatically restart when equipment that operates within the limit is plugged in.

Downloaded from www.Manualslib.com manuals search engine

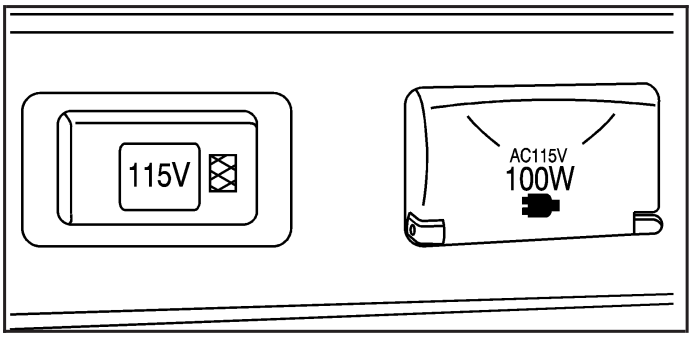

The power outlet is located near the center of the instrument panel. Before using the outlet, turn on the ignition and press the button next to the outlet. An indicator light in the button will come on. After using the outlet, press the button again to turn it off.

The power outlet is not designed for the following electrical equipment and they may not work properly:

- Equipment with high initial peak wattage: cathode-ray tube type televisions, compressor-driven refrigerators, electric power tools.
- Other equipment requiring an extremely stable power supply: microcomputer-controlled electric blankets, touch sensor lamps, etc.

Ashtray(s) and Cigarette Lighter

Notice: **If you put papers, pins, or other flammable items in the ashtray, hot cigarettes or other smoking materials could ignite them and possibly damage your vehicle. Never put flammable items in the ashtray.**

To use the lighter, if your vehicle has one, push the lighter in all the way and let go. When it is ready, it will pop back out by itself. If the engine is not running, the key must be in ACC to use the lighter.

It is not recommended to use the cigarette lighter to plug in auxiliary electrical equipment. Use the accessory power outlet for phones and other electrical equipment. See *Accessory Power Outlet(s) on page 3-18* or *Power Outlet 115 Volt Alternating Current on page 3-18*.

Notice: **Holding a cigarette lighter in while it is heating does not let the lighter back away from the heating element when it is hot. Damage from overheating can occur to the lighter or heating element, or a fuse could be blown. Do not hold a cigarette lighter in while it is heating.**

Your vehicle may have a removable ashtray that sits in your front cupholder in the center console storage area.

Downloaded from www.Manualslib.com manuals search engine

Climate Controls

Climate Control System

With this system you can control the heating, cooling and ventilation for your vehicle.

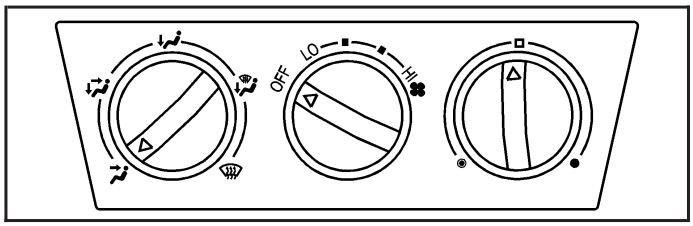

Operation

(Fan): Turn the center knob away from OFF to turn the system on. Turn the knob toward HI to increase fan speed.

If the airflow seems low when the fan is at the highest setting, the passenger compartment air filter may need to be replaced. For more information, see *Passenger Compartment Air Filter on page 3-23* and *Scheduled Maintenance on page 6-4*.

To change the current mode, select one of the following:

(Vent): Air is directed to the upper instrument panel outlets.

(Bi-Level): Air is directed to the upper instrument panel outlets, and to the floor outlets.

(Floor): Air is directed to the floor outlets and to the outboard outlets (for the side windows).

(Recirculation): Press this button, located in the center of the instrument panel to the left of the audio system, to turn the recirculation mode on or off. This mode recirculates the air inside the vehicle. It can be used to prevent outside air and odors from entering your vehicle or to help heat or cool the air inside your vehicle more quickly. When the button is pressed, an indicator light in the button comes on. Press the button again to turn off recirculate and to circulate outside air through the system. The indicator light will go off. Recirculate is automatically turned off when the climate control system mode knob is turned to defog or defrost or is between modes.

Downloaded from www.Manualslib.com manuals search engine

Temperature Control: Turn the right knob clockwise or counterclockwise to increase or decrease the temperature inside the vehicle.

A/C (Air Conditioning): Press this button, located in the center of the instrument panel to the left of the audio system, to turn the air-conditioning system on or off. When A/C is pressed, an indicator light in the button comes on to let you know that the air conditioning is activated.

MAX A/C (Maximum Air Conditioning): Press the A/C and recirculation buttons at the same time to select MAX A/C.

On hot days, open the windows to let hot inside air escape; then close them. This helps to reduce the time it takes for the vehicle to cool down. It also helps the system to operate more efficiently.

The air-conditioning system removes moisture from the air, so you might notice a small amount of water dripping underneath your vehicle while idling or after turning off the engine. This is normal.

Defogging and Defrosting

Fog on the inside of windows is a result of high humidity (moisture) condensing on the cool window glass. This can be minimized if the climate control system is used properly. There are two modes to clear fog or frost from the windshield. Use the defog mode to clear the inside of the windshield of fog or moisture and warm the passengers. Use the defrost mode to remove fog or frost from the outside of the windshield more quickly.

(Defog): Air is directed between the windshield, side windows, instrument panel outlets and the floor outlets. The air-conditioning compressor will run automatically in this setting without pressing A/C, unless the outside temperature is at or below 32°F (0°C).

(Defrost): Air is directed to the windshield, instrument panel outlets and the side windows. The air-conditioning compressor will run automatically in this setting without pressing A/C, unless the outside temperature is at or below 32°F (0°C).

Do not drive the vehicle until all the windows are clear.

Downloaded from www.Manualslib.com manuals search engine

Rear Window Defogger

The rear window defogger uses a warming grid to clear fog from the rear window.

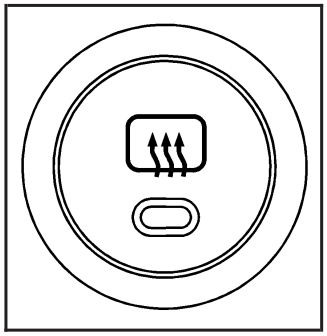

The rear window defogger button is located on the center of the instrument panel, above the audio system. The defogger does not operate with the rear liftglass opened.

The rear window defogger will only work when the ignition is in the ON position.

(Rear Defogger): Press the defogger button to turn the rear window defogger on or off. An indicator light in the button comes on to let you know that the rear window defogger is activated. Be sure to clear as much snow from the rear window as possible.

The rear window defogger will turn off automatically approximately 15 minutes after the button is pressed. The defogger can also be turned off by pressing the button again or by turning off the engine.

Notice: **Do not use a razor blade or sharp object to clear the inside rear window. Do not adhere anything to the defogger grid lines in the rear glass. These actions may damage the rear defogger. Repairs would not be covered by your warranty.**

Outlet Adjustment

Use the air outlets located in the center and outboard sides of the instrument panel, to change the direction of the air flowing through the vents.

Operation Tips

- Clear away any ice, snow or leaves from the air inlets at the base of the windshield that may block the flow of air into your vehicle.
- Use of non-GM approved hood deflectors may adversely affect the performance of the system.
- Keep the path under the front seats clear of objects to help circulate the air inside of your vehicle more effectively.
- If the airflow seems low when the fan is at the highest setting, the passenger compartment air filter may need to be replaced. For more information, see “Passenger Compartment Air Filter” following and *Scheduled Maintenance on page 6-4*.

Downloaded from www.Manualslib.com manuals search engine

Passenger Compartment Air Filter

Passenger compartment air, both outside and recirculated air, is routed through a passenger compartment air filter. The filter removes certain contaminants from the air, including pollen and dust particles. Reductions in airflow, which may occur more quickly in dusty areas, indicate that the filter needs to be replaced early. An air filter is available through your dealer. For how often to change the air filter, see *Scheduled Maintenance on page 6-4*.

The access panel for the air filter is behind the glove box. To replace the filter, follow these steps:

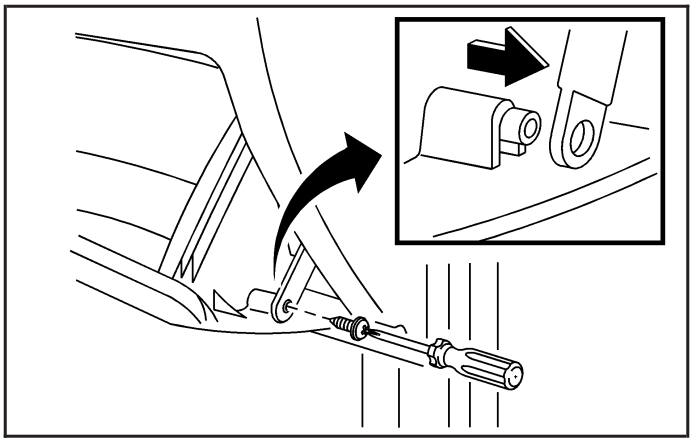

1. Lower the glove box door and remove the screw on the right side of the glovebox with a tool. Slide the arm of the glovebox off.
2. Push each side of the glovebox in and pull toward you.

Downloaded from www.Manualslib.com manuals search engine

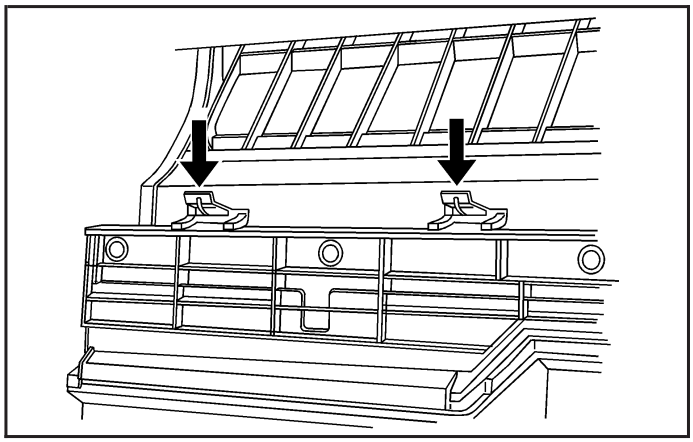

3. Push down on the snaps to release and remove the filter cover.

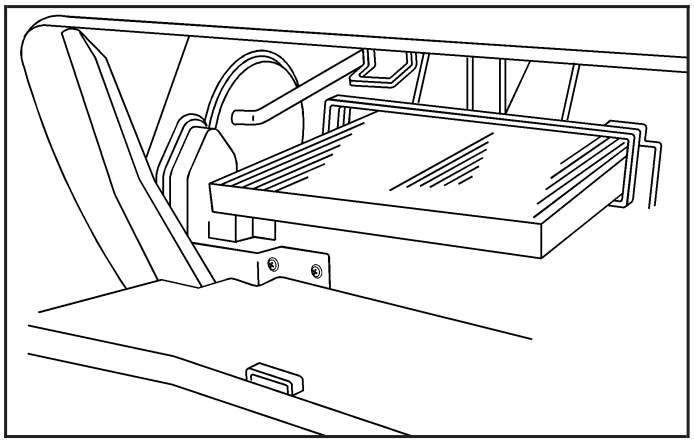

4. Remove the air filter.
5. Reverse the steps to install the new air filter.

It will not cause damage to your vehicle if you choose not to replace the air filter after removing it. However, the air coming into your vehicle will not be filtered.

Downloaded from www.Manualslib.com manuals search engine

Warning Lights, Gages, and Indicators

This section describes the warning lights and gages on your vehicle.

Warning lights and gages can signal that something is wrong before it becomes serious enough to cause an expensive repair or replacement. Paying attention to the warning lights and gages could also save you or others from injury.

Warning lights come on when there may be or is a problem with one of your vehicle's functions. As the details show on the next few pages, some warning lights come on briefly when you start the engine just to let you know they are working. If you are familiar with this section, you should not be alarmed when this happens.

Gages can indicate when there may be or is a problem with one of your vehicle's functions. Often gages and warning lights work together to let you know when there is a problem with your vehicle.

When one of the warning lights comes on and stays on as you are driving, or when one of the gages shows there may be a problem, check the section that tells you what to do about it. Please follow this manual's advice. Waiting to do repairs can be costly and even dangerous. So get to know your vehicle's warning lights and gages. They can be a big help.

Downloaded from www.Manualslib.com manuals search engine

Instrument Panel Cluster

The instrument panel is designed to let you know at a glance how your vehicle is running. You will know how fast you are going, how much fuel is left in the fuel tank and many other things you need to drive safely and economically.

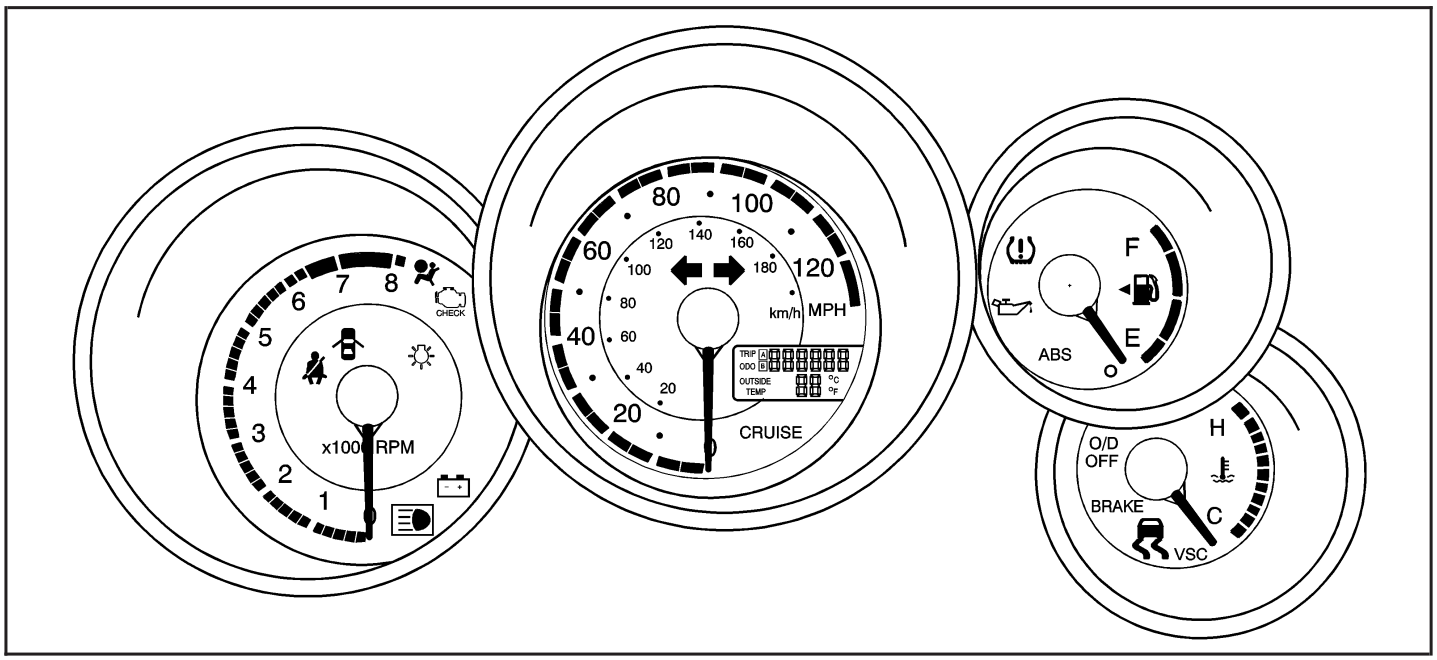

United States Cluster shown, Canada similar

Downloaded from www.Manualslib.com manuals search engine

Speedometer and Odometer

The speedometer lets you see your vehicle's speed in both miles per hour (mph) and kilometers per hour (km/h). The odometer shows how far your vehicle has been driven.

If your vehicle needs a new odometer installed, the new one must be set to the mileage total of the old odometer. If it cannot, then it is set at zero and a label must be put on the driver's door to show the old mileage reading when the new odometer was installed. See your dealer for more information.

Trip Odometers

The trip odometers can tell you how far your vehicle has been driven since you last set the trip odometer to zero.

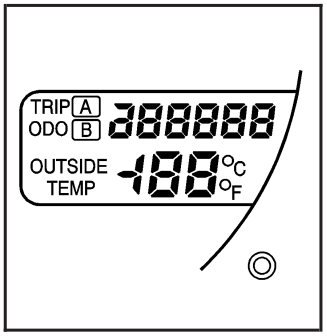

The button located on the right side of the instrument panel cluster allows you to switch between the odometer and the two trip odometers.

Press the button once to switch to TRIP A and again to switch to TRIP B. To return the display to the odometer reading, press the trip odometer button again.

To set the trip odometers to zero, press and hold the button.

Downloaded from www.Manualslib.com manuals search engine

Tachometer

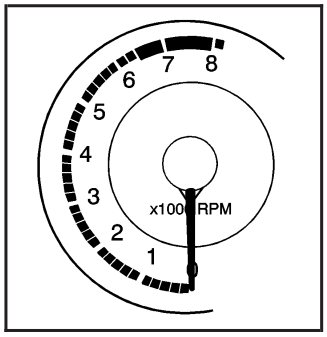

The tachometer shows engine speed in thousands of revolutions per minute (rpm).

Notice: **If you operate the engine with the tachometer in the shaded warning area, your vehicle could be damaged, and the damages would not be covered by your warranty. Do not operate the engine with the tachometer in the shaded warning area.**

Temperature Display

The outside air temperature is displayed on the center of the instrument panel, within the speedometer. The display will show the outside air temperature in Fahrenheit with a range from –22°F to 122°F (–30°C to 50°C).

Safety Belt Reminders

When the engine is started, a chime will come on for several seconds to remind people to fasten their safety belts, unless the driver's safety belt is already buckled.

The safety belt light will also flash until the driver's belt is buckled. If the driver's belt is already buckled, neither the chime nor the light will come on.

Your vehicle also has a safety belt reminder light for the right front passenger position.

This light is located on the center of the instrument panel, above the audio system.

Downloaded from www.Manualslib.com manuals search engine

When the key is turned to ON or START, this light will come on as a reminder for the right front passenger to fasten their safety belt. This light will flash until the right front passenger's safety belt is buckled. The passenger's safety belt reminder light will not come on if the right front passenger's belt is already buckled or if a sensor does not detect the weight of a passenger in that seat.

If something is placed on the right front passenger seat, the sensors in the seat may detect that object and cause the right front passenger safety belt reminder light to come on. If this happens, remove the object.

Airbag Readiness Light

There is an airbag readiness light on the instrument panel cluster, which shows the airbag symbol. The system checks the airbag's electrical system for malfunctions. The light tells you if there is an electrical problem. The system monitors the airbag sensor assembly, front airbag sensors, seat-mounted side impact and roof-mounted airbag sensors, driver's seat position sensor, driver's seat belt buckle switch, right front occupant sensing system and indicator light, front passenger's seat belt buckle switch, seat belt pretensioner assemblies, inflators, interconnecting wiring and power sources. For more information on the airbag system, see *Airbag System on page 1-50*.

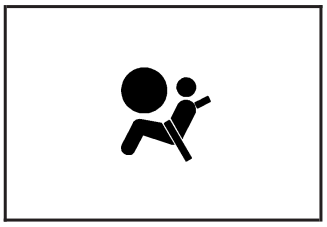

This light will come on briefly when you start your vehicle, then it should go out and the system is ready.

If the airbag readiness light stays on after you start the vehicle or comes on when you are driving, your airbag system may not work properly. Have your vehicle serviced right away.

⚠ CAUTION:

If the airbag readiness light stays on or keeps flashing after you start your vehicle, it means the airbag system and safety belt pretension system may not be working properly. The airbags in your vehicle may not inflate in a crash, or they could even inflate without a crash. To help avoid injury to yourself or others, have your vehicle serviced right away if the airbag readiness light stays on after you start your vehicle.

Downloaded from www.Manualslib.com manuals search engine

Passenger Airbag Status Indicator

Your vehicle has the passenger sensing system. Your instrument panel has a passenger airbag status indicator.

The indicator next to the passenger airbag status indicator lights is the passenger safety belt reminder light.

See *Safety Belt Reminders on page 3-28* for more information on that indicator.

When you start the vehicle, the passenger airbag status indicator will light ON and OFF for several seconds as a system check.

Then, after several more seconds, the status indicator will light either ON or OFF if there is weight on the seat or if the safety belt is buckled, to let you know the status of the right front passenger's frontal and seat-mounted side impact airbags (if equipped).

If the word ON is lit on the passenger airbag status indicator, it means that the right front passenger's frontal and seat-mounted side impact airbag (if equipped) are enabled (may inflate).

⚠ CAUTION:

If the on indicator comes on when you have a rear-facing child restraint installed in the right front passenger's seat, it means that the passenger sensing system has not turned off the passenger's frontal airbag and seat-mounted side impact airbag (if equipped). A child in a rear-facing child restraint can be seriously injured or killed if the right front passenger's airbag inflates. This is because the back of the rear-facing child restraint would be very close to the inflating airbag. Do not use a rear-facing child restraint in the right front passenger's seat if the airbag is turned on.

Downloaded from www.Manualslib.com manuals search engine

⚠ CAUTION:

Even though the passenger sensing system is designed to turn off the right front passenger's frontal airbag and seat-mounted side impact airbag (if equipped) if the system detects a rear-facing child restraint, no system is fail-safe, and no one can guarantee that an airbag will not deploy under some unusual circumstance, even though it is turned off. We recommend that rear-facing child restraints be secured in a rear seat, even if the airbag is or airbags are off.

If the word OFF is lit on the passenger airbag status indicator, it means that the passenger sensing system has turned off the right front passenger's frontal airbag and seat-mounted side impact airbag (if equipped). See *Passenger Sensing System on page 1-59* for more on this, including important safety information.

If, after several seconds, all status indicator lights remain on, or if there are no lights at all, there may be a problem with the lights or the passenger sensing system. See your dealer/retailer for service.

⚠ CAUTION:

If the airbag readiness light in the instrument panel cluster ever comes on and stays on, it means that something may be wrong with the airbag system. If this ever happens, have the vehicle serviced promptly, because an adult-size person sitting in the right front passenger's seat may not have the protection of the airbag(s). See *Airbag Readiness Light on page 3-29* for more on this, including important safety information.

Downloaded from www.Manualslib.com manuals search engine

Charging System Light

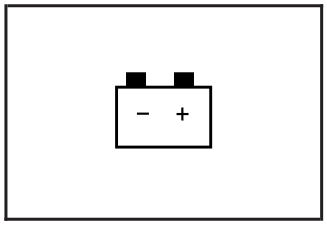

This light will come on briefly when the ignition is turned on, and the engine is not running, as a check to show you it is working.

It should go out when the engine is started. If it stays on, or comes on while you are driving, you may have a problem with the electrical charging system. Have it checked by your dealer/retailer. Driving while this light is on could drain your battery. If you must drive a short distance with the light on, be certain to turn off all your accessories, such as the radio and air conditioner to help reduce the drain on the battery.

Brake System Warning Light

Your vehicle's hydraulic brake system is divided into two parts. If one part is not working, the other part can still work and stop you. For good braking, though, you need both parts working well.

If the warning light comes on, there is a brake problem. Have your brake system inspected right away.

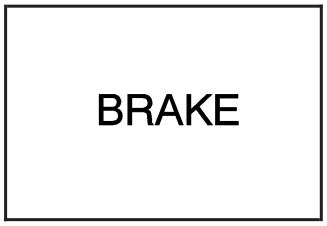

United States

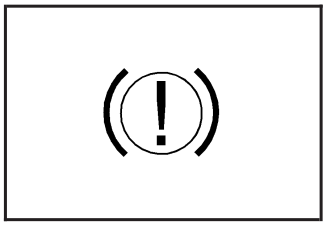

Canada

If your vehicle has anti-lock brakes, this light should come on when you turn the key to START. If it does not come on then, have it fixed so it will be ready to warn you if there is a problem.

Downloaded from www.Manualslib.com manuals search engine

When the ignition is on, the brake system warning light will also come on when you set your parking brake. The light will stay on if your parking brake does not release fully. If it stays on after your parking brake is fully released, it means you have a brake problem.

If the light comes on while you are driving, pull off the road and stop carefully. You may notice that the pedal is harder to push or the pedal may go closer to the floor. It may take longer to stop. If the light is still on, have the vehicle towed for service. See *Antilock Brake System Warning Light on page 3-33* and *Towing Your Vehicle on page 4-25*.

⚠ CAUTION:

Your brake system may not be working properly if the brake system warning light is on. Driving with the brake system warning light on can lead to an accident. If the light is still on after you have pulled off the road and stopped carefully, have the vehicle towed for service.

Antilock Brake System Warning Light

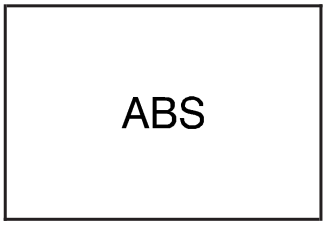

United States

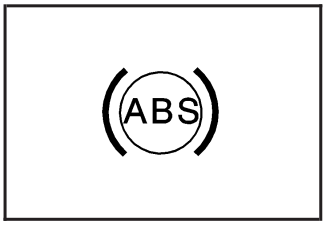

Canada

With the Antilock Brake System (ABS), this light comes on when the engine is started and can stay on for several seconds. This is normal.

If the light stays on, turn the ignition to LOCK. If the light comes on while you are driving, stop as soon as possible and turn the ignition off. Then start the engine again to reset the system. If the light still stays on, or comes on again while you are driving, your vehicle needs service. If the regular brake system warning light is not on, you still have brakes, but you do not have antilock brakes. If the regular brake system warning light is also on, you do not have antilock brakes and there is a problem with the regular brakes. See *Brake System Warning Light on page 3-32*.

Downloaded from www.Manualslib.com manuals search engine

The ABS warning light comes on briefly when you turn the ignition key to ON. This is normal. If the light does not come on then, have it fixed so it will be ready to warn you if there is a problem.

Low Tire Pressure Warning Light

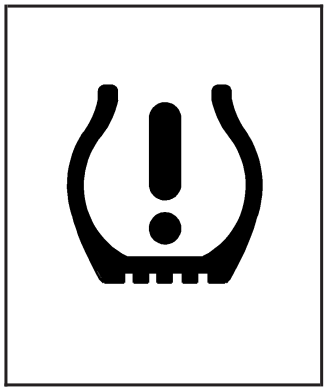

This light should come on briefly as you start the engine.

It will then come on only when a low tire pressure condition exists.

See *Tire Pressure Monitor System on page 5-57* for more information.

Traction Control System (TCS) Warning Light

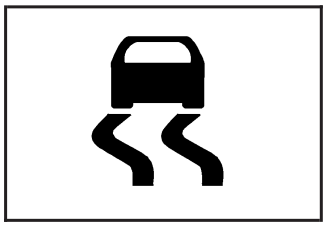

This light should come on briefly when you start the engine.

If it stays on or comes on while you are driving, there is a problem with your Traction Control System (TCS).

The TCS warning light comes on briefly when the ignition is turned to ON. It will come on again when you press the TRAC OFF button to turn off the TCS. See *Traction Control System (TCS) on page 4-6* for more information.

In the following cases, contact your dealer:

- The indicator light does not come on when the ignition is turned to ON.
- The indicator light remains on after the ignition is turned ON.
- The indicator light comes on with the normal driving mode while driving.

Downloaded from www.Manualslib.com manuals search engine

StabiliTrak® Indicator Light

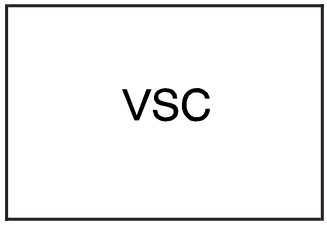

This light warns that there is a problem with the Traction Control System (TCS) or the Vehicle Stability Control (VSC) system.

The light will come on when the ignition is turned to ON and will go off after a few seconds.

If the light comes on while driving, the system does not work. However, as conventional braking operates when applied, there is no problem to continue driving.

In the following cases, contact your dealer:

- The warning light does not come on after the ignition is turned to ON.
- The warning light remains on after the ignition is turned to ON.
- The warning light comes on while driving.

The TCS light will come on when the VSC system warning light comes on, even if the TRAC OFF button is not pressed.

See *StabiliTrak® System on page 4-7* for more information on Vehicle Stability Control System.

See *Traction Control System (TCS) on page 4-6* for more information.

Engine Coolant Temperature Gage

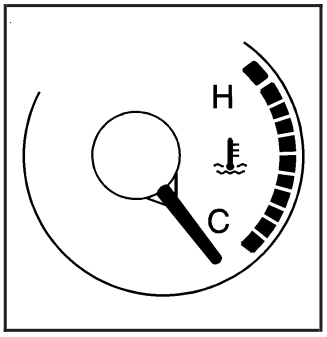

United States

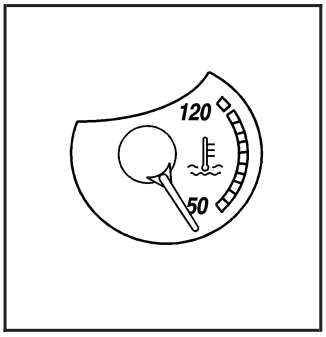

Canada

This gage shows the engine coolant temperature. If the gage pointer moves into the red area, the engine is too hot. It means that the engine has overheated. Pull off the road, stop your vehicle, and turn off the engine as soon as possible. See *Engine Overheating on page 5-26*.

Downloaded from www.Manualslib.com manuals search engine

Malfunction Indicator Lamp

Check Engine Light

A computer system called OBD II (On-Board Diagnostics-Second Generation) monitors operation of the fuel, ignition, and emission control systems. It makes sure that emissions are at acceptable levels for the life of the vehicle, helping to produce a cleaner environment.

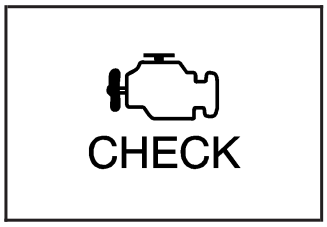

United States

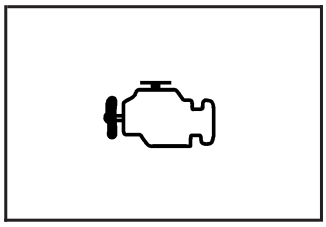

Canada

The check engine light comes on to indicate that there is an OBD II problem and service is required.

Malfunctions often are indicated by the system before any problem is apparent. This can prevent more serious damage to your vehicle. This system is also designed to assist your service technician in correctly diagnosing any malfunction.

Notice: **If you keep driving your vehicle with this light on, after a while, the emission controls might not work as well, your vehicle's fuel economy might not be as good, and the engine might not run as smoothly. This could lead to costly repairs that might not be covered by your warranty.**

Notice: **Modifications made to the engine, transmission, exhaust, intake, or fuel system of your vehicle or replacement tires that do not match your vehicle's original tires can affect your vehicle's emission controls and can cause this light to come on. Modifications to these systems could lead to costly repairs not covered by your warranty. This could also result in a failure to pass a required Emission Inspection/Maintenance test. See *Accessories and Modifications on page 5-3*.**

This light comes on, as a check to show it is working, when the ignition is turned to ON/RUN but the engine is not running. If the light does not come on, have it repaired. This light also comes on during a malfunction in one of two ways:

- **Light Flashing** — A misfire condition has been detected. A misfire increases vehicle emissions and could damage the emission control system on your vehicle. Diagnosis and service might be required.
- **Light On Steady** — An emission control system malfunction has been detected on your vehicle. Diagnosis and service might be required.

Downloaded from www.Manualslib.com manuals search engine

If the Light Is Flashing

The following can prevent more serious damage to your vehicle:

- Reduce vehicle speed.
- Avoid hard accelerations.
- Avoid steep uphill grades.
- If you are towing a trailer, reduce the amount of cargo being hauled as soon as it is possible

If the light stops flashing and remains on steady, see “If the Light Is On Steady” following.

If the light continues to flash, when it is safe to do so, stop the vehicle. Find a safe place to park your vehicle. Turn the key off, wait at least 10 seconds and restart the engine. If the light remains on steady, see “If the Light Is On Steady” following. If the light is still flashing, follow the previous steps, and see your dealer/retailer for service as soon as possible.

If the Light Is On Steady

You might be able to correct the emission system malfunction by considering the following:

Did you recently put fuel into your vehicle?

If so, reinstall the fuel cap, making sure to fully install the cap. See *Filling the Tank on page 5-7*. The diagnostic system can determine if the fuel cap has been left off or improperly installed. A loose or missing fuel cap allows fuel to evaporate into the atmosphere. A few driving trips with the cap properly installed should turn the light off.

Did you just drive through a deep puddle of water?

If so, your vehicle’s electrical system might be wet. The condition is usually corrected when the electrical system dries out. A few driving trips should turn the light off.

Have you recently changed brands of fuel?

If so, be sure to fuel your vehicle with quality fuel. See *Gasoline Octane on page 5-5*. Poor fuel quality causes the engine not to run as efficiently as designed. You might notice this as stalling after start-up, stalling when you put the vehicle into gear, misfiring, hesitation on acceleration, or stumbling on acceleration — these conditions might go away once the engine is warmed up. This will be detected by the system and cause the light to turn on.

If you experience one or more of these conditions, change the fuel brand you use. It will require at least one full tank of the proper fuel to turn the light off.

If none of the above steps have made the light turn off, your dealer/retailer can check the vehicle. Your dealer/retailer has the proper test equipment and diagnostic tools to fix any mechanical or electrical problems that may have developed.

Downloaded from www.Manualslib.com manuals search engine

Emissions Inspection and Maintenance Programs

Some state/provincial and local governments have or might begin programs to inspect the emission control equipment on your vehicle. Failure to pass this inspection could prevent you from getting a vehicle registration.

Here are some things you need to know to help your vehicle pass an inspection:

Your vehicle will not pass this inspection if the check engine light is on or not working properly.

Your vehicle will not pass this inspection if the OBD (on-board diagnostic) system determines that critical emission control systems have not been completely diagnosed by the system. The vehicle would be considered not ready for inspection. This can happen if you have recently replaced the battery or if the battery has run down. The diagnostic system is designed to evaluate critical emission control systems during normal driving. This can take several days of routine driving. If you have done this and your vehicle still does not pass the inspection for lack of OBD system readiness, your dealer/retailer can prepare the vehicle for inspection.

Oil Pressure Light

⚠ CAUTION:

Do not keep driving if the oil pressure is low. If you do, your engine can become so hot that it catches fire. You or others could be burned. Check your oil as soon as possible and have your vehicle serviced.

Notice: **Lack of proper engine oil maintenance may damage the engine. The repairs would not be covered by your warranty. Always follow the maintenance schedule in this manual for changing engine oil.**

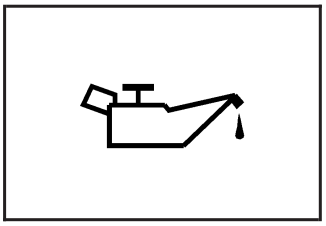

This light will come on briefly when you start your engine. If it does not, have your vehicle serviced.

When the light comes on and stays on, it means that oil is not flowing through your engine properly. You could be low on oil and you might have some other system problem.

Downloaded from www.Manualslib.com manuals search engine

Lights On Reminder

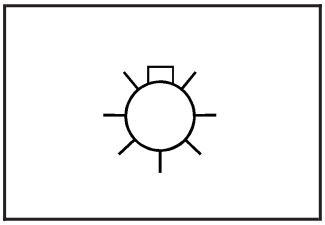

This light comes on whenever the headlights are on.

See *Headlamps on Reminder on page 3-15* for more information.

Taillamp Indicator Light

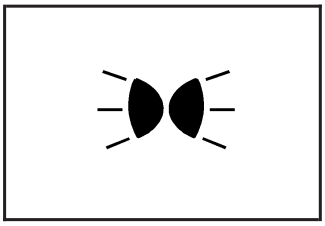

This light will come on when your taillamps are on.

Canada Only

See *Exterior Lamps on page 3-14* for more information.

Cruise Control Light

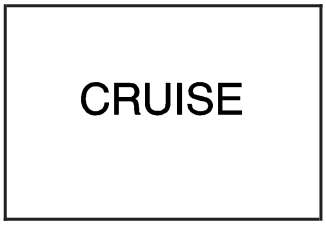

The CRUISE light comes on whenever you press the ON-OFF button to set your cruise control.

See *Cruise Control Light on page 3-39* for more information.

Overdrive Off Light

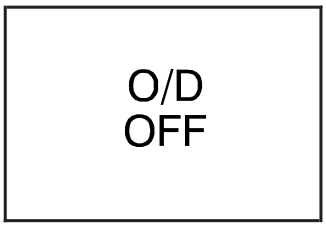

The automatic transaxle has overdrive. This light comes on whenever you turn off the overdrive.

See *Overdrive Off on page 2-25* for more information.

Downloaded from www.Manualslib.com manuals search engine

Highbeam On Light

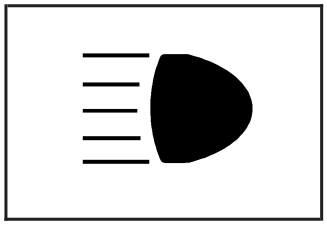

This light comes on when the high-beam headlamps are in use.

See *Headlamp High/Low-Beam Changer on page 3-8* for more information.

Low Washer Fluid Warning Light

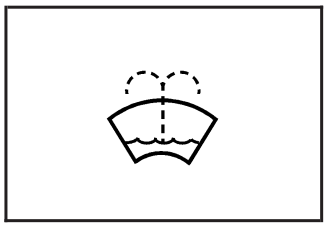

Canada Only

This light will come on when your windshield washer fluid is low.

See *Windshield Washer Fluid on page 5-34* for more information.

Door Ajar Light

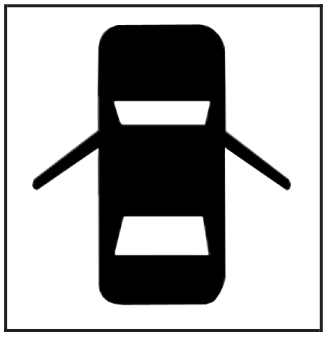

This light will come on if any door, the rear liftgate or the rear liftglass are not completely closed.

Downloaded from www.Manualslib.com manuals search engine

Fuel Gage

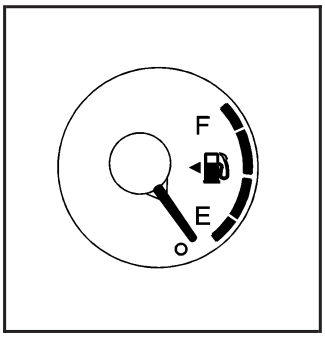

United States

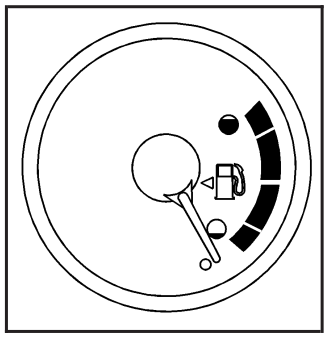

Canada

The fuel gage shows about how much fuel is in your fuel tank. An arrow on the fuel gage indicates that the fuel filler door is on the driver side of your vehicle. The fuel gage works only when the ignition switch is ON. When the gage first indicates E or empty, you still have a little fuel left, about 1 or 2 gallons (3.8 L or 7.6 L), but you need to get more right away. When your vehicle is low on fuel the low fuel warning light, located below the empty mark, will also come on to remind you to add fuel.

Here are five things some owners ask about. None of these show a problem with the fuel gage:

- At the gas station, the fuel pump shuts off before the gage reads F or full.
- It takes a little more or less fuel to fill up than the gage indicated. For example, the gage may have indicated the tank was half full, but it actually took more or less than half the tank's capacity to fill it.
- It takes the gage several minutes to read F or full after filling the vehicle with fuel.
- The gage moves a little when you turn, stop or speed up.
- The gage does not go back to E or empty when you turn off the ignition.

Downloaded from www.Manualslib.com manuals search engine

Low Fuel Warning Light

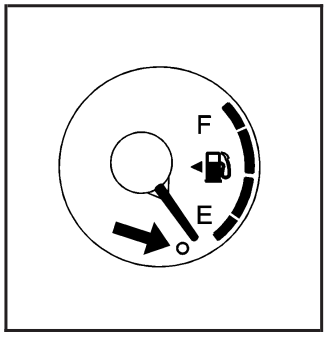

This light is located on the fuel gage and comes on when the fuel tank is low on fuel.

To turn it off, add fuel to the fuel tank. See *Fuel on page 5-5* for more information.

Audio System(s)

Determine which radio your vehicle has and then read the pages following to familiarize yourself with its features.

⚠ CAUTION:

This system provides you with far greater access to audio stations and song listings. Giving extended attention to entertainment tasks while driving can cause a crash and you or others can be injured or killed. Always keep your eyes on the road and your mind on the drive — avoid engaging in extended searching while driving.

Keeping your mind on the drive is important for safe driving. See *Defensive Driving on page 4-2*. Here are some ways in which you can help avoid distraction while driving.

Downloaded from www.Manualslib.com manuals search engine

While your vehicle is parked:

- Familiarize yourself with all of its controls.
- Familiarize yourself with its operation.
- Set up your audio system by presetting your favorite radio stations, setting the tone, and adjusting the speakers. Then, when driving conditions permit, you can tune to your favorite radio stations using the presets and steering wheel controls if the vehicle has them.

Notice: **Before adding any sound equipment to your vehicle, such as an audio system, CD player, CB radio, mobile telephone, or two-way radio, make sure that it can be added by checking with your dealer/retailer. Also, check federal rules covering mobile radio and telephone units. If sound equipment can be added, it is very important to do it properly. Added sound equipment may interfere with the operation of your vehicle's engine, radio, or other systems, and even damage them. Your vehicle's systems may interfere with the operation of sound equipment that has been added.**

Setting the Time

The radio may have a button marked with an H or HR to represent hours and an M or MN to represent minutes.

Press and hold the hour button until the correct hour displays. AM or PM displays for morning or evening hours. Press and hold the minute button until the correct minute displays. The time can be set with the ignition on or off.

To synchronize the time with an FM station broadcasting Radio Data System (RDS) information, press and hold the hour and minute buttons at the same time until UPDATED and the clock symbol appear on the display. If the time is not available from the station, NO UPDATE or NO UPDAT will appear on the display.

RDS time is broadcast once a minute. After tuning to an RDS broadcast station, it could take a few minutes for the time to update.

Downloaded from www.Manualslib.com manuals search engine

Radio(s)

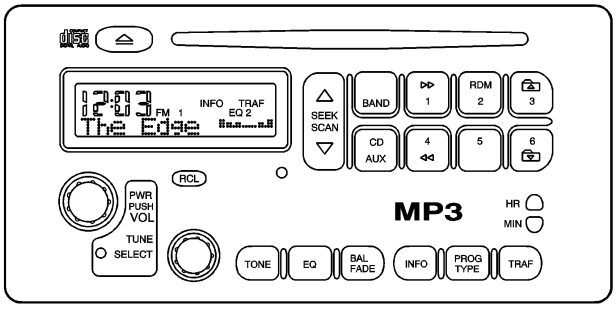

Radio with CD (MP3) shown,
Radio with CD (Basic) similar

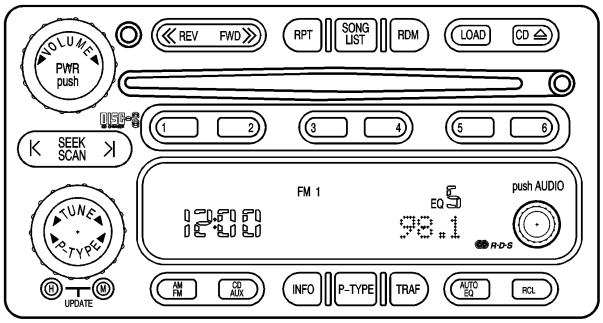

Radio with Six-Disc CD Player

Your vehicle has one of these radios as its audio system.

If your vehicle has the Premium audio system, it includes seven speakers. See your dealer/retailer for details.

The radio has a theft-deterrent feature. A red light blinks while the engine is off to indicate the radio is protected. It will not operate if it is installed in a different vehicle.

Downloaded from www.Manualslib.com manuals search engine

Radio Data System (RDS)

The audio system has a Radio Data System (RDS). RDS features are available for use only on FM stations that broadcast RDS information.

With RDS, the radio can do the following:

- Seek to stations broadcasting the selected type of programming
- Receive announcements concerning local and national emergencies
- Display messages from radio stations
- Seek to stations with traffic announcements

This system relies upon receiving specific information from these stations and only works when the information is available. In rare cases, a radio station can broadcast incorrect information that causes the radio features to work improperly. If this happens, contact the radio station.

While the radio is tuned to an RDS station, the station name or the call letters display instead of the frequency. RDS stations can also provide the time of day, a program type (PTY) for current programming, and the name of the program being broadcast.

XM™ Satellite Radio Service

XM™ is a satellite radio service that is based in the 48 contiguous United States and 10 Canadian provinces. XM™ Satellite Radio has a wide variety of programming and commercial-free music, coast-to-coast, and in digital-quality sound. During your trial or when you subscribe, you will get unlimited access to XM™ Radio Online for when you are not in your vehicle. A service fee is required to receive the XM™ service. For more information, contact XM™ at www.xmradio.com or call 1-800-929-2100 in the U.S. and www.xmradio.ca or call 1-877-438-9677 in Canada.

Playing the Radio

PWR (Power): Push this knob to turn the system on and off.

VOL (Volume): Turn this knob clockwise or counterclockwise to increase or to decrease the volume.

RCL (Recall): Push this button to switch the display between the current radio station frequency and the time. When the ignition is turned off, push this button to display the time.

Push the RCL button to change what displays while using RDS. The display options are station, RDS station frequency, PTY (program type), and the name of the program (if available).

Downloaded from www.Manualslib.com manuals search engine

Push the RCL button while in XM™ mode (if equipped) to retrieve four different categories of information related to the current song or channel: Artist, Song Title, Category or PTY, Channel Number/Channel Name.

To change the default on the display, push the RCL button until the desired option displays, then hold the button until the display flashes. The selected display becomes the default.

Finding a Station

BAND: Press this button to switch between FM1, FM2, AM, or XM1 or XM2 (if equipped). The display shows the selection.

AM/FM: For the Radio with Six-Disc CD player, press this button to switch between FM1, FM2, AM, XM1, and XM2 (if equipped). The selection displays.

TUNE: Turn this knob to select radio stations.

△▽ **or** ⊲ ⊳ **SEEK:** Press the up or the down arrows to go to the next or to the previous station and stay there.

The radio only seeks stations with a strong signal that are in the selected band.

△▽ **or** ⊲ ⊳ **SCAN:** Press and hold either SCAN arrow for two seconds until SCAN or SC displays and a beep sounds. The radio goes to a station, plays for a few seconds, then goes to the next station. Press either SCAN arrows again to stop scanning.

To scan preset stations, press and hold either SCAN arrow for more than four seconds until PSCAN or PRESET SCAN and the preset number displays and a double beep sounds. The radio goes to the first preset station, plays for a few seconds, then goes to the next preset station. Press either SCAN arrow again to stop scanning presets.

The radio scans stations only with a strong signal that are in the selected band.

Setting Preset Stations

Up to 30 stations (six FM1, six FM2, six AM, six XM1, and six XM2 (if equipped)), can be programmed on the six numbered pushbuttons, by performing the following steps:

1. Turn the radio on.
2. Press BAND or depending on the radio, AM/FM, to select FM1, FM2, AM, XM1, and XM2 (if equipped).
3. Tune in the desired station.
4. Press and hold one of the six numbered pushbuttons until a beep sounds. When that numbered pushbutton is pressed, the station that was set, returns and the equalization that was selected is stored for that pushbutton.
5. Repeat the steps for each pushbutton.

Downloaded from www.Manualslib.com manuals search engine

Setting the Tone (Bass/Midrange/Treble)

TONE: Press and release this button until BASS, MID (midrange), or TREB (treble) displays. The SELECT LED indicator lights to show that the tone control can be adjusted. Turn the SELECT knob to increase or to decrease. If a station is weak or has static, decrease the treble.

Press and hold the TONE button until FLAT displays, to return all of the tone controls to the middle position.

EQ (Equalizer): Press this button to select customized bass, midrange, and treble equalization settings.

Up to six customized equalization settings, can be programmed on the six numbered pushbuttons, by performing the following steps:

1. Turn the radio on.
2. Use the TONE button and the SELECT knob to create the desired equalization.
3. Press and hold the EQ button for two seconds. SELECT EQ # displays and the EQ symbol flashes.
4. Press EQ or turn the SELECT knob to select the desired EQ number.
5. Press and hold the EQ button to store the equalization setting and the number. A beep sounds and EQ SAVED displays.
6. Repeat the steps for the other EQ settings and numbers.

EQ 5 has been programmed at the factory for use with talk radio, but it can be set to a different tone.

For vehicles that have a radio with a Six-Disc CD player, see the following for setting the tone.

AUDIO: For the Radio with Six-Disc CD player, push and release the AUDIO knob until BASS, MID (midrange), or TREB (treble) displays. Turn the knob to increase or to decrease the tone. If a station is weak or has static, decrease the treble.

To adjust bass, midrange, or treble to the middle position, select BASS, MID, or TREB and push and hold the AUDIO knob. The radio beeps once and adjusts the display level to the middle position.

To adjust all tone and speaker controls to the middle position, push and hold the AUDIO knob when no tone or speaker controls display. CENTERED displays and a beep sounds.

Downloaded from www.Manualslib.com manuals search engine

AUTO EQ (Automatic Equalization): For the Radio with Six-Disc CD player, press this button to select customized equalization settings designed for country, jazz, talk, pop, rock, and classical.

To return to the manual mode, press the AUTO EQ button until CUSTOM displays. Then manually adjust the bass, midrange, and treble using the AUDIO knob.

Adjusting the Speakers (Balance/Fade)

BAL (Balance): To adjust the balance between the right and the left speakers, press and release this button until BAL displays. The SELECT LED indicator lights to show that the speakers can be adjusted. Turn the SELECT knob to move the sound toward the right or the left speakers.

FADE: Press and release this button until FADE displays, to adjust the fade between the front and the rear speakers. The SELECT LED indicator lights to show that the speakers can be adjusted. Turn the SELECT knob to move the sound toward the front or the rear speakers.

Press and hold the BAL FADE button for two seconds to return all speaker settings to the middle position.

For vehicles that have a radio with a Six-Disc CD player, see the following for adjusting the speakers.

AUDIO: For the Radio with Six-Disc CD player, push and release the AUDIO knob until BAL (balance) displays, to adjust the balance between the right and the left speakers. Turn the knob to move the sound toward the right or the left speakers.

Push and release the AUDIO knob until FAD (fade) displays, to adjust the fade between the front and rear speakers. Turn the knob to move the sound toward the front or the rear speakers.

Select balance or fade and push and hold the AUDIO knob, to adjust the balance and the fade to the middle position. The radio beeps once and adjusts the display level to the middle position.

Push and hold the AUDIO knob when no tone or speaker controls display, to adjust all tone and speaker controls to the middle position. CENTERED displays and a beep sounds.

Downloaded from www.Manualslib.com manuals search engine

Finding a Program Type (PTY) Station (RDS and XM™)

To select and find a desired PTY perform the following:

1. Press PROG TYPE, or depending on the radio, P-TYPE, to activate program type select mode. The PTY symbol displays.
2. Turn the SELECT, or depending on the radio, P-TYPE, knob to select a PTY.
3. Once the desired PTY displays, press either SEEK arrow to select the PTY and to take you to the PTY's first station.
4. To go to another station within that PTY, and the PTY displays, press either SEEK arrow once. If the PTY is not displayed, press either SEEK arrow twice to display the PTY and then to go to another station.
5. Press PROG TYPE, or depending on the radio, P-TYPE, to exit program type select mode.

   If PTY times out and is no longer on the display, go back to Step 1.

If both PTY and TRAF are on, the radio searches for stations with the selected PTY and traffic announcements.

The Radio with Six-Disc CD player has the PTY interrupt feature. To use this feature, press and hold the P-TYPE button until a beep sounds on the PTY you want to interrupt with. When selected, an asterisk displays beside that PTY on the display. Select multiple interrupts if desired. When listening to a CD, the last selected RDS station interrupts play if that selected program type format is broadcast.

△▽ or ⊲ ⊳ SCAN: Scan the stations within a PTY by performing the following:

1. Press PROG TYPE, or depending on the radio, P-TYPE, to activate program type select mode. The PTY symbol displays.
2. Turn the SELECT, or depending on the radio, P-TYPE, knob to select a PTY.
3. Once the desired PTY is displayed, press and hold either SCAN arrow, and the radio begins scanning the stations in the PTY.
4. Press either SCAN arrow to stop at a station.

If both PTY and TRAF are on, the radio scans for stations with the selected PTY and traffic announcements.

BAND or AM/FM (Alternate Frequency): Alternate frequency lets the radio switch to a stronger FM station with the same program type. To turn alternate frequency on, press and hold BAND or depending on the radio, A/M for two seconds. AF ON displays. The radio can switch to FM stations with a stronger frequency.

To turn alternate frequency off, press and hold BAND again for two seconds. A F OFF displays. The radio does not switch to stronger FM stations.

Downloaded from www.Manualslib.com manuals search engine

Setting Preset PTYs (RDS Only)

These pushbuttons have factory PTY presets. Up to 12 PTYs (six FM1 and six FM2), can be programmed on the six numbered pushbuttons, by performing the following steps:

1. Press BAND, or depending on the radio, AM/FM to select FM1 or FM2.
2. Press PROG TYPE, or depending on the radio, P-TYPE, to activate program type select mode. The PTY symbol displays.
3. Turn the SELECT, or depending on the radio, P-TYPE, knob to select a PTY.
4. Press and hold one of the six numbered pushbuttons until a beep sounds. When that numbered pushbutton is pressed, the PTY that was set, returns, if program type select mode is activated.
5. Repeat the steps for each pushbutton.

RDS Messages

ALERT!: Alert warns of local or national emergencies. When an alert announcement comes on the current radio station, ALERT! displays. You will hear the announcement, even if the volume is low or a CD is playing. If a CD is playing, play stops during the announcement. Alert announcements cannot be turned off.

ALERT! is not affected by tests of the emergency broadcast system. This feature is not supported by all RDS stations.

INFO (Information): If the current station has a message, INFO displays. Press this button to see the message. The message can display the artist, song title, call in phone numbers, etc.

If the entire message is not displayed, parts of the message displays every three seconds. To scroll through the message, press and release the INFO button. A new group of words display after every press of this button. Once the complete message has displayed, the information symbol disappears from the display until another new message is received. The last message can be displayed by pressing the INFO button. The last message is shown until a new message is received or you tune to a different station.

Downloaded from www.Manualslib.com manuals search engine

TRAF (Traffic): If TRAF displays, the tuned station broadcasts traffic announcements. To receive the traffic announcement from the tuned station, press this button. Brackets are displayed around TRAF and when a traffic announcement broadcasts on the tuned radio station, you will hear it.

If the station does not broadcast traffic announcements, press the TRAF button and the radio seeks to a station that does. When a station that broadcasts traffic announcements is found, the radio stops seeking and brackets are displayed around TRAF. If no station is found that broadcasts traffic announcements, NO TRAFFIC displays.

If the brackets are on the display and TRAF is not, press the TRAF button to remove the brackets or use the TUNE knob or the SEEK arrows to go to a station that supports traffic announcements. If no station is found that broadcasts traffic announcements, NO TRAFFIC displays.

The radio plays the traffic announcement if the volume is low. The radio interrupts the play of a CD if the last tuned station broadcasts traffic announcements and the brackets display.

This function does not apply to XM™ Satellite Radio Service.

Radio Messages

If any error occurs repeatedly or if an error cannot be corrected, contact your dealer/retailer.

Radio Messages for XM™ Only

See *XM Radio Messages on page 3-63* later in this section for further detail.

Playing a CD

For the Radio with CD (Base), insert a CD partway into the slot, label side up. The player pulls it in and the CD should begin playing. If you insert a CD with the radio off and the ignition on, it starts to play.

For the Radio with CD (MP3) Insert a CD partway into the slot, label side up. The player pulls it in and READING DISC and the CD symbol displays. If you want to insert a CD with the ignition off, first press the eject button or push the RCL button.

If the ignition or radio is turned off while a CD is in the player, it stays in the player. When the ignition or radio is turned on, the CD starts to play where it stopped, if it was the last selected audio source.

When the CD is inserted, the CD symbol displays. As each new track starts to play, the track number displays.

The CD player can play the smaller 3 inch (8 cm) single CDs with an adapter ring. Full-size CDs and the smaller CDs are loaded in the same manner.

Downloaded from www.Manualslib.com manuals search engine

Care of Your CDs

If playing a CD-R, the sound quality can be reduced due to CD-R quality, the method of recording, the quality of the music that has been recorded, and the way the CD-R has been handled. Handle them carefully. Store CD-R(s) in their original cases or other protective cases and away from direct sunlight and dust. The CD player scans the bottom surface of the disc. If the surface of a CD is damaged, such as cracked, broken, or scratched, the CD does not play properly or not at all. Do not touch the bottom side of a CD while handling it; this could damage the surface. Pick up CDs by grasping the outer edges or the edge of the hole and the outer edge.

If the surface of a CD is soiled, take a soft, lint free cloth or dampen a clean, soft cloth in a mild, neutral detergent solution mixed with water, and clean it. Make sure the wiping process starts from the center to the edge.

If there is no apparent damage, try a known good CD.

Care of Your CD Player

Do not add any label to a CD, it could get caught in the CD player. If a CD is recorded on a personal computer and a description label is needed, try labeling the top of the recorded CD with a marking pen.

The use of CD lens cleaners for CDs is not advised, due to the risk of contaminating the lens of the CD optics with lubricants internal to the CD player mechanism.

Notice: **If a label is added to a CD, or more than one CD is inserted into the slot at a time, or an attempt is made to play scratched or damaged CDs, the CD player could be damaged. While using the CD player, use only CDs in good condition without any label, load one CD at a time, and keep the CD player and the loading slot free of foreign materials, liquids, and debris.**

If an error displays, see “CD Messages” later in this section.

Downloaded from www.Manualslib.com manuals search engine

For vehicles that have a radio with a Six-Disc CD player, see the following:

LOAD / CD ⏏ : Press the LOAD side of this button to load CDs into the CD player. This CD player holds up to six CDs.

To insert one CD, do the following:

1. Turn the ignition on.
2. Press and release the LOAD button.
3. Wait for the indicator light, located to the right of the slot, to turn green.
4. Load a CD. Insert the CD partway into the slot, label side up. The player pulls the CD in.

To insert multiple CDs, do the following:

1. Turn the ignition on.
2. Press and hold the LOAD button for two seconds.

   A beep sounds and the indicator light, located to the right of the slot, begins to flash.
3. Once the light stops flashing and turns green, load a CD. Insert the CD partway into the slot, label side up. The player pulls the CD in.

   Once the CD is loaded, the light begins flashing again. Once the light stops flashing and turns green, load another CD. The CD player takes up to six CDs. Do not try to load more than six.

To load more than one CD but less than six, complete Steps 1 through 3. When finished loading CDs, the radio begins to play the last CD loaded.

If more than one CD has been loaded, a number for each CD displays.

Playing a Specific Loaded CD

For every CD loaded, a number appears on the display. To play a specific CD, first press the CD AUX button, then press the numbered pushbutton that corresponds to the CD. A small bar appears under the CD number that is playing and the track number displays.

If an error appears on the display, see “CD Messages” later in this section.

LOAD / CD ⏏ (Eject): Press the CD eject side of this button to eject a CD(s). A beep sounds and the indicator light flashes to let you know when a CD is being ejected.

REMOVE CD displays. The CD can be removed.
If the CD is not removed, after 25 seconds, the CD is automatically pulled back into the player. If the CD is pushed back into the player, before the 25 second time period is complete, the player senses an error and tries to eject the CD several times before stopping.

Downloaded from www.Manualslib.com manuals search engine

Do not repeatedly press the CD eject button to eject a CD after trying to push it in manually. The player's 25-second eject timer resets at each press of eject, causing the player to not eject the CD until the 25-second time period has elapsed.

Once the player stops and the CD is ejected, remove the CD. After removing the CD, push the PWR knob off and then on again, or wait for the system to reset. This clears the CD-sensing feature and enables CDs to be loaded into the player again.

▷▷ 1 (Forward) or FWD ≫ (Forward): Depending on the radio your vehicle has, the reverse arrows will look different, but they function the same. Press and hold this button to advance quickly within a track. Sound is heard at a reduced volume. Release this pushbutton to play the passage. The elapsed time of the track displays.

RPT (Repeat): For the Radio with Six-Disc CD player, use this feature to repeat one track or an entire CD.

To use repeat, do the following:

- To repeat the track, press and release the RPT button. RPT displays. Press RPT again to turn off repeat play.
- To repeat the CD, press and hold the RPT button for two seconds. RPT displays. Press RPT again to turn off repeat play.

RDM 2 / RDM 3 / RDM (Random): Depending on the radio, press the RDM 2 or RDM 3 button to hear the tracks in random, rather than sequential, order. RDM and the track number displays. Press RDM again to turn off random play.

For the Radio with Six-Disc CD player, the tracks can be listened to in random order, on one CD or on all of the CDs.

To use random on the Radio with Six-Disc CD player, do one of the following:

- To play the tracks on the CD in random order, press and release the RDM button. RANDOM ONE displays. Press RDM again to turn off random play.
- To play the tracks on all of the CDs that are loaded in random order, press and hold RDM for more than two seconds. A beep sounds and RANDOM ALL displays. Press RDM again to turn off random play.

3 (Next Folder): This button does not have a function for non-MP3 CDs. Press this button to go to the next MP3 folder.

Downloaded from www.Manualslib.com manuals search engine

4 ◁◁ or ≪ REV (Reverse): Depending on the radio that your vehicle has, the reverse arrows will look different, but they function the same. Press and hold this button to reverse quickly within a track. Sound is heard at a reduced volume. Release this pushbutton to play the passage. The elapsed time of the track displays.

6 (Previous Folder): This button does not have a function for non-MP3 CDs. Press this button to go to the previous MP3 folder.

EQ or AUTO EQ (Equalization): Press EQ, or depending on the radio, AUTO EQ, to select the desired customized equalization setting while playing a CD. The equalization is automatically set when a CD is played. See “EQ” or “AUTO EQ” listed previously for more information.

△ SEEK ▽ (Radios with CD): Press the SEEK arrows to go to the previous or to the next track. Pressing either arrow for more than two seconds searches the previous or next tracks at two tracks per second. When the desired track number displays, release the arrow to stop searching and to play the track.

⊲ SEEK ⊳ (Radio with Six-Disc CD Player): Press the left arrow to go to the start of the current track, if more than ten seconds have played. Press the right arrow to go to the next track. If either arrow is held or pressed more than once, the player continues moving backward or forward through the CD.

△ SCAN ▽ (Radios with CD): Press and hold either arrow for more than two seconds until SCAN and the track number displays and a beep sounds. The CD goes to the next track, plays for a few seconds, then goes to the next track. Press either arrow again to stop scanning.

⊲ SCAN ⊳ (Radio with Six-Disc CD Player): To scan one CD, press and hold either SCAN arrow for more than two seconds until SCAN displays and a beep sounds. The radio goes to the next track, plays for 10 seconds, then goes to the next track. Press either SCAN arrow again, to stop scanning.

To scan all loaded CDs, press and hold either SCAN arrow for more than four seconds until CD SCAN displays and a beep sounds. Use this feature to listen to 10 seconds of the first track of each loaded CD. Press either SCAN arrow again, to stop scanning.

Downloaded from www.Manualslib.com manuals search engine

RCL (Recall): Push this button to see how long the current track has been playing. To change the default on the display, track and elapsed time, push the button until the desired option displays, then hold the button until the display flashes. The selected display is now the default.

BAND or AM/FM: Depending on the radio, press this button to listen to the radio when a CD is playing. The inactive CD remains inside the radio for future listening.

CD AUX (Auxiliary): Press this button to play a CD while listening to the radio.

⏏ **(Eject):** For the Radios with CD, press this button to eject a CD. Eject can be activated with either the ignition or radio off. CDs can be loaded with the radio and ignition off if this button is pressed first.

Using Song List Mode (Radio with Six-Disc CD Player)

This type of radio has a feature called song list. This feature is capable of saving 20 track selections.

To save tracks into the song list feature, perform the following steps:

1. Turn the CD player on and load it with at least one CD. See “LOAD CD” listed previously in this section for more information.
2. Check to see that the CD changer is not in song list mode. S-LIST should not display. If S-LIST displays, press the SONG LIST button to turn it off.
3. Select the desired CD by pressing the numbered pushbutton and then use the SEEK SCAN right arrow to locate the track to be saved. The track begins to play.
4. Press and hold the SONG LIST button to save the track into memory. When SONG LIST is pressed, one beep sounds. After two seconds of continuously pressing the SONG LIST button, two beeps sound to confirm the track has been saved.
5. Repeat Steps 3 and 4 for saving other selections.

S-LIST FULL displays if more than 20 selections are saved.

Downloaded from www.Manualslib.com manuals search engine

To play the song list, press the SONG LIST button. One beep sounds and S-LIST displays. The recorded tracks begins to play in the order they were saved.

Seek through the song list by using the SEEK SCAN arrows. Seeking past the last saved track returns to the first saved track.

To delete tracks from the song list, perform the following steps:

1. Turn the CD player on.
2. Press the SONG LIST button to turn song list on. S-LIST displays.
3. Press the SEEK SCAN arrows to select the desired track to be deleted.
4. Press and hold the SONG LIST button for two seconds. When SONG LIST is pressed, one beep sounds. After two seconds of continuously pressing the SONG LIST button, two beeps sound to confirm the track has been deleted.

After a track has been deleted, the remaining tracks are moved up the list. When another track is added to the song list, the track is added to the end of the list.

To delete the entire song list, perform the following steps:

1. Turn the CD player on.
2. Press the SONG LIST button to turn song list on. S-LIST displays.
3. Press and hold the SONG LIST button for more than four seconds. One beep sounds, followed by two beeps after two seconds, and a final beep sounds after four seconds. S-LIST EMPTY displays indicating the song list has been deleted.

If a CD is ejected, and the song list contains saved tracks from that CD, those tracks are automatically deleted from the song list. Any tracks saved to the song list again are added to the bottom of the list.

To end song list mode, press the SONG LIST button. One beep sounds and S-LIST is removed from the display.

Playing an MP3 CD-R Disc

Your vehicle's radio system may have the MP3 feature. If it has this feature, it is capable of playing an MP3 CD-R disc. For more information on how to play an MP3 CD-R disc, see *Using an MP3 on page 3-58* later in this section.

Downloaded from www.Manualslib.com manuals search engine

CD Messages

CHECK CD: If this message displays and/or the CD comes out, it could be for one of the following reasons:

- It is very hot. When the temperature returns to normal, the CD should play.
- You are driving on a very rough road. When the road becomes smoother, the CD should play.
- The CD is dirty, scratched, wet, or upside down.
- The air is very humid. If so, wait about an hour and try again.
- The format of the CD may not be compatible. See *Using an MP3 on page 3-58* later in this section.
- There could have been a problem while burning the CD.
- The label could be caught in the CD player.

If the CD is not playing correctly, for any other reason, try a known good CD.

If any error occurs repeatedly or if an error cannot be corrected, contact your dealer/retailer. If the radio displays an error message, write it down and provide it to your dealer/retailer when reporting the problem.

Using an MP3

MP3 CD-R Disc

MP3 Format

If you burn your own MP3 disc on a personal computer:

- Make sure the MP3 files are recorded on a CD-R disc.
- Do not mix standard audio and MP3 files on one disc.
- Make sure playlists have a .mp3 or .wpl extension, other file extensions might not work.
- Files can be recorded with a variety of fixed or variable bit rates. Song title, artist name, and album are available for display by the radio when recorded using ID3 tags version 1 and 2.
- Create a folder structure that makes it easy to find songs while driving. Organize songs by albums using one folder for each album. Each folder or album should contain 18 songs or less.
- Make sure to finalize the disc when burning an MP3 disc, using multiple sessions. It is usually better to burn the disc all at once.

Downloaded from www.Manualslib.com manuals search engine

The player is able to read and play a maximum of 50 folders, 50 playlists, 10 sessions, and 255 files. Long file names, folder names, or playlist names can use more disc memory space than necessary. To conserve space on the disc, minimize the length of the file, folder, or playlist names. You can also play an MP3 CD that was recorded using no file folders. The system can support up to 11 folders in depth, though, keep the depth of the folders to a minimum in order to keep down the complexity and confusion in trying to locate a particular folder during playback. If a CD contains more than the maximum of 50 folders, 50 playlists, 10 sessions, and 255 files the player lets you access and navigate up to the maximum, but all items over the maximum are ignored.

Root Directory

The root directory is treated as a folder. If the root directory has compressed audio files, the directory is displayed as F1 ROOT. All files contained directly under the root directory are accessed prior to any root directory folders. However, playlists (Px) are always be accessed before root folders or files.

Empty Directory or Folder

If a root directory or a folder exists somewhere in the file structure that contains only folders/subfolders and no compressed files directly beneath them, the player advances to the next folder in the file structure that contains compressed audio files. The empty folder does not display.

No Folder

When the CD contains only compressed files, the files are located under the root folder. The next and previous folder functions do not function on a CD that was recorded without folders or playlists. When displaying the name of the folder the radio displays ROOT.

When the CD contains only playlists and compressed audio files, but no folders, all files are located under the root folder. The folder down and the folder up buttons searches playlists (Px) first and then go to the root folder. When the radio displays the name of the folder the radio displays ROOT.

Downloaded from www.Manualslib.com manuals search engine

Order of Play

Tracks are played in the following order:

- Play begins from the first track in the first playlist and continues sequentially through all tracks in each playlist. When the last track of the last playlist has played, play continues from the first track of the first playlist.
- If the CD does not contain any playlists, then play begins from the first track under the root directory. When all tracks from the root directory have played, play continues from files according to their numerical listing. After playing the last track from the last folder, play begins again at the first track of the first folder or root directory.

When play enters a new folder, the display does not automatically show the new folder name unless you have chosen the folder mode as the default display. See RCL later in this section for more information. The new track name displays.

File System and Naming

The song name that displays is the song name that is contained in the ID3 tag. If the song name is not present in the ID3 tag, then the radio displays the file name without the extension (such as .mp3) as the track name.

Track names longer than 39 characters or 3 pages are shortened. The display does not show parts of words on the last page of text and the extension of the filename does not display.

Preprogrammed Playlists

Preprogrammed playlists which were created by WinAmp™, MusicMatch™, or Real Jukebox™ software can be accessed, however, they cannot be edited using the radio. These playlists are treated as special folders containing compressed audio song files.

Downloaded from www.Manualslib.com manuals search engine

Playing an MP3

Insert a CD partway into the slot, label side up. The player pulls it in, and READING DISC displays. The CD should begin playing and the CD symbol displays. If you want to insert a CD with the ignition off, first press the eject button or the RCL button.

If the ignition or radio is turned off with a CD in the player it stays in the player. When the ignition or radio is turned on, the CD starts to play where it stopped, if it was the last selected audio source.

▷▷ **1 (Forward):** Press and hold this pushbutton to advance quickly within a track. Press and hold this pushbutton for less than two seconds to advance at 10 times the normal playing speed. Press and hold it for more than two seconds to advance at 20 times the normal playing speed. Release this pushbutton to play the track. FWD and the elapsed time of the track displays.

RDM 2 (Random): To repeat the tracks in the current folder or playlist, press and release this pushbutton. FOLDER RANDOM displays. Once all of the tracks in the current folder or playlist have been played, the system moves on to the next folder or playlist and plays all of the tracks in random order.

To repeat the tracks on the CD, press and hold this pushbutton for two seconds. A beep sounds and DISC RANDOM displays. This feature does not work with playlists.

While in random, pressing and releasing either SEEK arrow goes to the next or previous random track.

Press and release this pushbutton again to turn off random play. NO RANDOM displays.

3 (Next Folder): Press this pushbutton to go to the first track in the next folder or playlist. If the disc contains playlists, it goes through the playlist, then the folders. Pressing this button while in folder random mode takes you to the next folder and randomizes the tracks in that folder. This function does not work on a CD that does not contain folders or playlists.

4 ◁◁ (Reverse): Press and hold this pushbutton to reverse quickly within a track. Press and hold this pushbutton for less than two seconds to reverse at 10 times the normal playing speed. Press and hold it for more than two seconds to reverse at 20 times the normal playing speed. Release this pushbutton to play the track. REV and the elapsed time of the track appears on the display. If this pushbutton is pressed for more than 20 seconds, the radio stops reversing and begins to play.

Downloaded from www.Manualslib.com manuals search engine

6 (Previous Folder): Press this pushbutton to go to the first track in the previous folder or playlist. If the disc contains playlists, it goes through the playlist, then the folders. Pressing this pushbutton while in folder random mode takes you to the previous folder and randomizes the tracks in that folder. This function does not work on a CD that does not contain folders or playlists.

△ SEEK ▽: Press the up arrow to go to the start of the next track. Press the down arrow to go to the start of the previous track. Pressing either arrow for more than two seconds searches the previous or next tracks at two tracks per second. When the desired track number displays, release the arrow to stop searching and to play the track.

TUNE: Turn this knob to fast track reverse or advance through tracks in all folders or playlists. The track number and file name appears on the display for each track. Turn this knob while in random to fast track reverse or advance the tracks in sequential order.

RCL (Recall): Push this button to switch between track mode, folder, or playlist mode, and time of day mode. The display shows only 13 characters, but there can be up to three pages of text. If there are more than 13 characters in the song, folder, or playlist name pushing this button within two seconds takes you to the next page of text. If there are no other pages to be shown, pushing this button within two seconds takes you to the next display mode.

Track mode displays the current track number and the ID3 tag song name.

Folder/playlist mode displays the current folder or playlist number and the folder/playlist name.

Time of day mode displays the time of day and the ID3 tag song name.

To change the default on the display, push this button until you see the desired display, then hold this button for two seconds. The radio produces one beep and the selected display is now the default.

INFO (Information): INFO displays whenever a current track has ID3 tag information. Press this button to display the artist name and album contained in the tag. INFO disappears from the display when the information in the ID3 tag has finished.

BAND: Press this button to listen to the radio when a CD is playing. The inactive CD remains inside the radio for future listening.

CD AUX (Auxiliary): Press this button to play a CD when listening to the radio. The CD symbol displays when a CD is loaded.

⏏ (Eject): Press this button to eject a CD. Eject may be activated with either the ignition or radio off. CDs can be loaded with the radio and ignition off if this button is pressed first.

Downloaded from www.Manualslib.com manuals search engine

XM Radio Messages

XL (Explicit Language Channels): These channels, or any others, can be blocked at a customer's request, by calling 1-800-852-XMXM (9696).

Updating: The encryption code in the receiver is being updated, and no action is required. This process should take no longer than 30 seconds.

No Signal: The system is functioning correctly, but the vehicle is in a location that is blocking the XM™ signal. When the vehicle is moved into an open area, the signal should return.

Loading XM: The audio system is acquiring and processing audio and text data. No action is needed. This message should disappear shortly.

CH Off Air: This channel is not currently in service. Tune to another channel.

CH Unavail: This previously assigned channel is no longer assigned. Tune to another station. If this station was one of the presets, choose another station for that preset button.

No Info: No artist, song title, category, or text information is available at this time on this channel. The system is working properly.

No Info: No text or informational messages are available at this time on this channel. The system is working properly.

Not Found: There are no channels available for the selected category. The system is working properly.

XM Locked: The XM™ receiver in your vehicle may have previously been in another vehicle. For security purposes, XM™ receivers cannot be swapped between vehicles. If this message is received after having your vehicle serviced, check with your dealer/retailer.

Radio ID: If tuned to channel 0, this message alternates with the XM™ Radio eight digit radio ID label. This label is needed to activate the service.

Unknown: If this message is received when tuned to channel 0, there may be a receiver fault. Consult with your dealer/retailer.

Chk XMRcvr: If this message does not clear within a short period of time, the receiver may have a fault. Consult with your dealer/retailer.

Radio Reception

Frequency interference and static can occur during normal radio reception if items such as cell phone chargers, vehicle convenience accessories, and external electronic devices are plugged into the accessory power outlet. If there is interference or static, unplug the item from the accessory power outlet.

Downloaded from www.Manualslib.com manuals search engine

AM

The range for most AM stations is greater than for FM, especially at night. The longer range can cause station frequencies to interfere with each other. For better radio reception, most AM radio stations boost the power levels during the day, and then reduce these levels during the night. Static can also occur when things like storms and power lines interfere with radio reception. When this happens, try reducing the treble on your radio.

FM Stereo

FM stereo gives the best sound, but FM signals only reach about 10 to 40 miles (16 to 65 km). Tall buildings or hills can interfere with FM signals, causing the sound to fade in and out.

XM™ Satellite Radio Service

XM™ Satellite Radio Service gives digital radio reception from coast-to-coast in the 48 contiguous United States, and in Canada. Just as with FM, tall buildings or hills can interfere with satellite radio signals, causing the sound to fade in and out. In addition, traveling or standing under heavy foliage, bridges, garages, or through tunnels could cause loss of the XM signal for a period of time. The radio may display NO XM SIGNAL to indicate interference.

Fixed Mast Antenna

The fixed mast antenna can withstand most car washes without being damaged. If the mast should ever become slightly bent, straighten it out by hand. If the mast is badly bent, replace it.

Check occasionally to make sure the mast is still tightened to the antenna base located on the roof of the vehicle. If tightening is required, tighten by hand.

XM™ Satellite Radio Antenna System

The XM™ Satellite Radio antenna is located on the roof of your vehicle. Keep this antenna clear of snow and ice build up for clear radio reception.

If your vehicle has a sunroof, the performance of the XM™ system may be affected if the sunroof is open.

Loading items onto the roof of your vehicle can interfere with the performance of the XM™ system. Make sure the XM™ Satellite Radio antenna is not obstructed.

Downloaded from www.Manualslib.com manuals search engine

Section 4 Driving Your Vehicle

Your Driving, the Road, and Your Vehicle 4-2
Defensive Driving 4-2
Drunk Driving 4-2
Control of a Vehicle 4-3
Braking 4-3
Antilock Brake System (ABS) 4-4
Braking in Emergencies 4-5
Traction Control System (TCS) 4-6
StabiliTrak® System 4-7
Panic Brake Assist 4-7
Steering 4-8
Off-Road Recovery 4-10
Passing 4-10
Loss of Control 4-10
Driving at Night 4-12
Driving in Rain and on Wet Roads 4-12
Before Leaving on a Long Trip 4-13
Highway Hypnosis 4-13
Hill and Mountain Roads 4-14
Winter Driving 4-15
If Your Vehicle is Stuck in Sand, Mud, Ice, or Snow 4-18
Rocking Your Vehicle to Get It Out 4-19
Loading Your Vehicle 4-19
Towing 4-25
Towing Your Vehicle 4-25
Recreational Vehicle Towing 4-25
Towing a Trailer 4-27

Downloaded from www.Manualslib.com manuals search engine

Your Driving, the Road, and Your Vehicle

Defensive Driving

Defensive driving means “always expect the unexpected.” The first step in driving defensively is to wear your safety belt — See *Safety Belts: They Are for Everyone on page 1-10*.

⚠ CAUTION:

Assume that other road users (pedestrians, bicyclists, and other drivers) are going to be careless and make mistakes. Anticipate what they might do and be ready. In addition:

- **Allow enough following distance between you and the driver in front of you.**
- **Focus on the task of driving.**

Driver distraction can cause collisions resulting in injury or possible death. These simple defensive driving techniques could save your life.

Drunk Driving

⚠ CAUTION:

Drinking and then driving is very dangerous. Your reflexes, perceptions, attentiveness, and judgment can be affected by even a small amount of alcohol. You can have a serious — or even fatal — collision if you drive after drinking. Do not drink and drive or ride with a driver who has been drinking. Ride home in a cab; or if you are with a group, designate a driver who will not drink.

Death and injury associated with drinking and driving is a global tragedy.

Alcohol affects four things that anyone needs to drive a vehicle: judgment, muscular coordination, vision, and attentiveness.

Police records show that almost 40 percent of all motor vehicle-related deaths involve alcohol. In most cases, these deaths are the result of someone who was drinking and driving. In recent years, more than 17,000 annual motor vehicle-related deaths have been associated with the use of alcohol, with about 250,000 people injured.

Downloaded from www.Manualslib.com manuals search engine

For persons under 21, it is against the law in every U.S. state to drink alcohol. There are good medical, psychological, and developmental reasons for these laws.

The obvious way to eliminate the leading highway safety problem is for people never to drink alcohol and then drive.

Medical research shows that alcohol in a person's system can make crash injuries worse, especially injuries to the brain, spinal cord, or heart. This means that when anyone who has been drinking — driver or passenger — is in a crash, that person's chance of being killed or permanently disabled is higher than if the person had not been drinking.

Control of a Vehicle

The following three systems help to control your vehicle while driving — brakes, steering, and accelerator. At times, as when driving on snow or ice, it is easy to ask more of those control systems than the tires and road can provide. Meaning, you can lose control of your vehicle.

Adding non-dealer/non-retailer accessories can affect your vehicle's performance. See *Accessories and Modifications on page 5-3*.

Braking

See *Brake System Warning Light on page 3-32*.

Braking action involves perception time and reaction time. First, you have to decide to push on the brake pedal. That is perception time. Then you have to bring up your foot and do it. That is reaction time.

Average reaction time is about three-fourths of a second. But that is only an average. It might be less with one driver and as long as two or three seconds or more with another. Age, physical condition, alertness, coordination, and eyesight all play a part. So do alcohol, drugs, and frustration. But even in three-fourths of a second, a vehicle moving at 60 mph (100 km/h) travels 66 feet (20 m). That could be a lot of distance in an emergency, so keeping enough space between your vehicle and others is important.

And, of course, actual stopping distances vary greatly with the surface of the road, whether it is pavement or gravel; the condition of the road, whether it is wet, dry, or icy; tire tread; the condition of the brakes; the weight of the vehicle; and the amount of brake force applied.

Downloaded from www.Manualslib.com manuals search engine

Avoid needless heavy braking. Some people drive in spurts — heavy acceleration followed by heavy braking — rather than keeping pace with traffic. This is a mistake. The brakes might not have time to cool between hard stops. The brakes will wear out much faster if you do alot of heavy braking. If you keep pace with the traffic and allow realistic following distances, you will eliminate a lot of unnecessary braking. That means better braking and longer brake life.

If your vehicle's engine ever stops while you are driving, brake normally but do not pump the brakes. If you do, the pedal could get harder to push down. If the engine stops, you will still have some power brake assist. But you will use it when you brake. Once the power assist is used up, it can take longer to stop and the brake pedal will be harder to push.

Adding non-dealer/non-retailer accessories can affect your vehicle's performance. See *Accessories and Modifications on page 5-3*.

Antilock Brake System (ABS)

Your vehicle might have the Antilock Brake System (ABS), an advanced electronic braking system that will help prevent a braking skid.

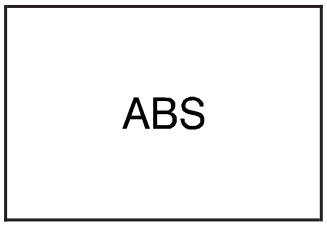

United States

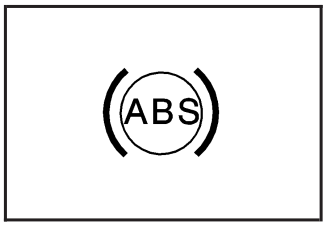

Canada

If your vehicle has ABS, this warning light on the instrument panel will come on briefly when you start your vehicle.

When you start the engine, or when you begin to drive away, ABS will check itself. You might hear a momentary motor or clicking noise while this test is going on, and you might even notice that the brake pedal moves or pulses a little. This is normal.

If there is a problem with ABS, the antilock brake system warning light will stay on. See *Antilock Brake System Warning Light on page 3-33*.

Downloaded from www.Manualslib.com manuals search engine

Let us say the road is wet and you are driving safely. Suddenly, an animal jumps out in front of you. You slam on the brakes and continue braking. Here is what happens with ABS:

A computer senses that wheels are slowing down. If one of the wheels is about to stop rolling, the computer will separately work the brakes at each front wheel and at both rear wheels.

ABS can change the brake pressure faster than any driver could. The computer is programmed to make the most of available tire and road conditions. This can help you steer around the obstacle while braking hard.

As you brake, the computer keeps receiving updates on wheel speed and controls braking pressure accordingly.

If your vehicle has the vehicle stability control system, it includes a brake assist system which provides more powerful braking during a sudden, hard brake application. See “Vehicle Stability Control System” under *Traction Control System (TCS) on page 4-6*.

Remember: ABS does not change the time you need to get your foot up to the brake pedal or always decrease stopping distance. If you get too close to the vehicle in front of you, you will not have time to apply the brakes if that vehicle suddenly slows or stops. Always leave enough room up ahead to stop, even though you have ABS.

Using ABS

Do not pump the brakes. Just hold the brake pedal down firmly and let antilock work for you. You might feel a slight brake pedal pulsation or notice some noise, but this is normal.

Braking in Emergencies

At some time, nearly every driver gets into a situation that requires hard braking.

If you have ABS, you can steer and brake at the same time. However, if you do not have ABS, your first reaction — to hit the brake pedal hard and hold it down — might be the wrong thing to do. Your wheels can stop rolling. Once they do, the vehicle cannot respond to your steering. Momentum will carry it in whatever direction it was headed when the wheels stopped rolling. That could be off the road, into the very thing you were trying to avoid, or into traffic.

If you do not have ABS, use a “squeeze” braking technique. This will give you maximum braking while maintaining steering control. You can do this by pushing on the brake pedal with steadily increasing pressure.

In an emergency, you will probably want to squeeze the brakes hard without locking the wheels. If you hear or feel the wheels sliding, ease off the brake pedal.

Downloaded from www.Manualslib.com manuals search engine

This will help you retain steering control. If you do have ABS, it is different. See *Antilock Brake System (ABS) on page 4-4*.

In many emergencies, steering can help you more than even the very best braking.

Traction Control System (TCS)

Your vehicle may have a traction control system that limits wheel spin. This is especially useful in slippery road conditions. The system operates only if it senses that one or both of the front wheels are spinning or beginning to lose traction. When this happens, the system works the front brakes and reduces engine power to limit wheel spin.

You may feel or hear the system working, but this is normal. Leave the system on during ordinary driving so that it can operate when needed. When the ignition is turned to ON, the system automatically turns on.

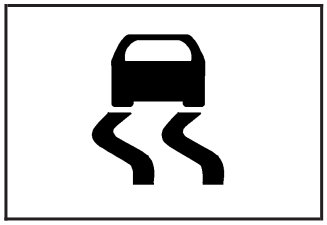

This light should come on briefly when you start the engine.

If it stays on or comes on while you are driving, there is a problem with your traction control system.

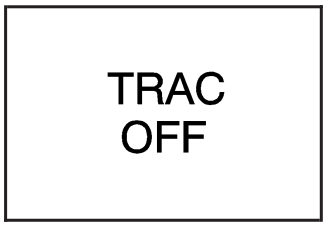

The TRAC OFF button is located to the left of the steering wheel below the instrument panel cluster.

When getting the vehicle out of mud or newly fallen snow, turn off the traction control system. The system that controls engine performance interferes with the process of freeing the front wheels. To turn off traction control, press the TRAC OFF button. The traction control system warning light will come on. The vehicle stability control system (StabiliTrak®) is always activated, even when the traction control system is turned off. To turn the traction control system back on, press the TRAC OFF button again. The traction control system warning light will go off. See *Traction Control System (TCS) Warning Light on page 3-34* for more information.

Adding non-GM accessories can affect your vehicle's performance. See *Accessories and Modifications on page 5-3* for more information.

Downloaded from www.Manualslib.com manuals search engine

StabiliTrak® System

Your vehicle may have this feature. The StabiliTrak® system helps provide integrated control of the systems such as anti-lock brake system, traction control and engine control. This system automatically controls the brakes and engine to help prevent the vehicle from skidding when cornering on a slippery road surface or turning the steering wheel abruptly.

This system will activate when your vehicle speed reaches or exceeds 9 mph (15 km/h), and will deactivate when the vehicle speed reduces to below 9 mph (15 km/h).

You may hear a sound in the engine compartment for a few seconds when the engine is started or just after the vehicle begins to move. This means that the system is in the self-check mode, but does not indicate a malfunction.

If the vehicle is going to skid during driving, the traction control system warning light will blink and an alarm will sound intermittently. Adjust your driving accordingly.

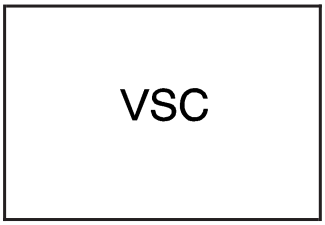

This light warns that there is a problem somewhere in the traction control system or StabiliTrak®.

Panic Brake Assist

Your vehicle has a panic brake assist system that monitors the intention of the driver while braking. If the system senses that the driver has applied hard/fast pressure to the brake pedal, the system will generate additional pressure, making it easier for the driver to maintain brake application. When this happens the brake pedal will feel easier to push. Just hold the brake pedal down firmly and let the system work for you. You may feel the brakes vibrate, or you may notice some noise but this is normal. The brakes will return to normal operation after the brake pedal has been released.

The brake assist system becomes operational after the vehicle has accelerated to a speed in excess of approximately 6 mph (10 km/h). It stops operating when the vehicle decelerates to a speed below approximately 3 mph (5 km/h).

Downloaded from www.Manualslib.com manuals search engine

Steering

Power Steering

If you lose power steering assist because the engine stops or the system is not functioning, you can steer but it will take much more effort.

Steering Tips

It is important to take curves at a reasonable speed.

A lot of the “driver lost control” accidents mentioned on the news happen on curves. Here is why:

Experienced driver or beginner, each of us is subject to the same laws of physics when driving on curves. The traction of the tires against the road surface makes it possible for the vehicle to change its path when you turn the front wheels. If there is no traction, inertia will keep the vehicle going in the same direction. If you have ever tried to steer a vehicle on wet ice, you will understand this.

The traction you can get in a curve depends on the condition of the tires and the road surface, the angle at which the curve is banked, and your speed. While you are in a curve, speed is the one factor you can control.

Suppose you are steering through a sharp curve. Then you suddenly apply the brakes. Both control systems — steering and braking — have to do their work where the tires meet the road. Unless you have antilock brakes, adding the hard braking can demand too much of those places. You can lose control.

The same thing can happen if you are steering through a sharp curve and you suddenly accelerate. Those two control systems — steering and acceleration — can overwhelm those places where the tires meet the road and make you lose control.

What should you do if this ever happens? Ease up on the brake or accelerator pedal, steer the vehicle the way you want it to go, and slow down.

Speed limit signs near curves warn that you should adjust your speed. Of course, the posted speeds are based on good weather and road conditions. Under less favorable conditions you will want to go slower.

If you need to reduce your speed as you approach a curve, do it before you enter the curve, while the front wheels are straight ahead.

Try to adjust your speed so you can drive through the curve. Maintain a reasonable, steady speed. Wait to accelerate until you are out of the curve, and then accelerate gently into the straightaway.

Adding non-dealer/non-retailer accessories can affect your vehicle’s performance. See *Accessories and Modifications on page 5-3*.

Downloaded from www.Manualslib.com manuals search engine

Steering in Emergencies

There are times when steering can be more effective than braking. For example, you come over a hill and find a truck stopped in your lane, or a car suddenly pulls out from nowhere, or a child darts out from between parked cars and stops right in front of you. You can avoid these problems by braking — if you can stop in time. But sometimes you cannot; there is not room. That is the time for evasive action — steering around the problem.

Your vehicle can perform very well in emergencies like these. First apply the brakes — but, unless you have antilock brakes, not enough to lock the wheels. See *Braking on page 4-3*. It is better to remove as much speed as you can from a possible collision. Then steer around the problem, to the left or right depending on the space available.

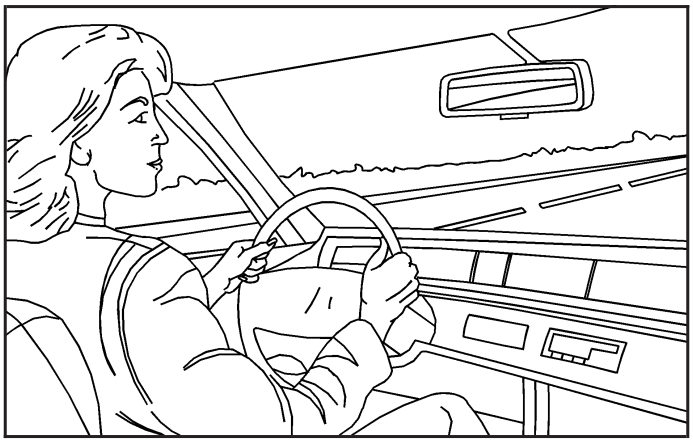

An emergency like this requires close attention and a quick decision. If you are holding the steering wheel at the recommended 9 and 3 o'clock positions, you can turn it a full 180 degrees very quickly without removing either hand. But you have to act fast, steer quickly, and just as quickly straighten the wheel once you have avoided the object.

The fact that such emergency situations are always possible is a good reason to practice defensive driving at all times and wear safety belts properly.

Downloaded from www.Manualslib.com manuals search engine

Off-Road Recovery

You may find that your vehicle's right wheels have dropped off the edge of a road onto the shoulder while you are driving.

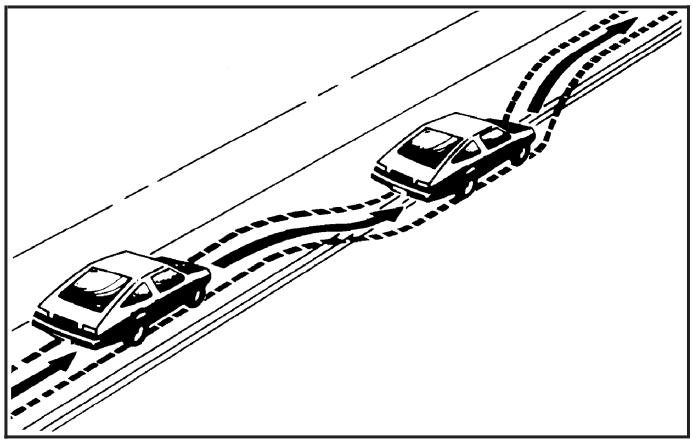

If the level of the shoulder is only slightly below the pavement, recovery should be fairly easy. Ease off the accelerator and then, if there is nothing in the way, steer so that your vehicle straddles the edge of the pavement. You can turn the steering wheel up to one-quarter turn until the right front tire contacts the pavement edge. Then turn the steering wheel to go straight down the roadway.

Passing

Passing another vehicle on a two-lane road can be dangerous. To reduce the risk of danger while passing, we suggest the following tips:

- Look down the road, to the sides, and to crossroads for situations that might affect a successful pass. If in doubt, wait.
- Watch for traffic signs, pavement markings, and lines that could indicate a turn or an intersection. Never cross a solid or double-solid line on your side of the lane.
- Do not get too close to the vehicle you want to pass. Doing so can reduce your visibility.
- Wait your turn to pass a slow vehicle.
- When you are being passed, ease to the right.

Loss of Control

Let us review what driving experts say about what happens when the three control systems — brakes, steering, and acceleration — do not have enough friction where the tires meet the road to do what the driver has asked.

In any emergency, do not give up. Keep trying to steer and constantly seek an escape route or area of less danger.

Downloaded from www.Manualslib.com manuals search engine

Skidding

In a skid, a driver can lose control of the vehicle. Defensive drivers avoid most skids by taking reasonable care suited to existing conditions, and by not overdriving those conditions. But skids are always possible.

The three types of skids correspond to your vehicle's three control systems. In the braking skid, the wheels are not rolling. In the steering or cornering skid, too much speed or steering in a curve causes tires to slip and lose cornering force. And in the acceleration skid, too much throttle causes the driving wheels to spin.

A cornering skid and an acceleration skid are best handled by easing your foot off the accelerator pedal.

If your vehicle starts to slide, ease your foot off the accelerator pedal and quickly steer the way you want the vehicle to go. If you start steering quickly enough, your vehicle may straighten out. Always be ready for a second skid if it occurs.

Of course, traction is reduced when water, snow, ice, gravel, or other material is on the road. For safety, you will want to slow down and adjust your driving to these conditions. It is important to slow down on slippery surfaces because stopping distance will be longer and vehicle control more limited.

While driving on a surface with reduced traction, try your best to avoid sudden steering, acceleration, or braking, including reducing vehicle speed by shifting to a lower gear. Any sudden changes could cause the tires to slide. You may not realize the surface is slippery until your vehicle is skidding. Learn to recognize warning clues — such as enough water, ice, or packed snow on the road to make a mirrored surface — and slow down when you have any doubt.

If you have the Antilock Brake System (ABS), remember: It helps avoid only the braking skid. If you do not have ABS, then in a braking skid, where the wheels are no longer rolling, release enough pressure on the brakes to get the wheels rolling again. This restores steering control. Push the brake pedal down steadily when you have to stop suddenly. As long as the wheels are rolling, you will have steering control.

Downloaded from www.Manualslib.com manuals search engine

Driving at Night

Night driving is more dangerous than day driving because some drivers are likely to be impaired — by alcohol or drugs, with night vision problems, or by fatigue.

Night driving tips include:

- Drive defensively.
- Do not drink and drive.
- Reduce headlamp glare by adjusting the inside rearview mirror.
- Slow down and keep more space between you and other vehicles because your headlamps can only light up so much road ahead.
- Watch for animals.
- When tired, pull off the road.
- Do not wear sunglasses.
- Avoid staring directly into approaching headlamps.
- Keep the windshield and all glass on your vehicle clean — inside and out.
- Keep your eyes moving, especially during turns or curves.

No one can see as well at night as in the daytime. But, as we get older, these differences increase. A 50-year-old driver might need at least twice as much light to see the same thing at night as a 20-year-old.

Driving in Rain and on Wet Roads

Rain and wet roads can reduce vehicle traction and affect your ability to stop and accelerate. Always drive slower in these types of driving conditions and avoid driving through large puddles and deep-standing or flowing water.

⚠ CAUTION:

Wet brakes can cause crashes. They might not work as well in a quick stop and could cause pulling to one side. You could lose control of the vehicle.

After driving through a large puddle of water or a car/vehicle wash, lightly apply the brake pedal until the brakes work normally.

Flowing or rushing water creates strong forces. Driving through flowing water could cause your vehicle to be carried away. If this happens, you and other vehicle occupants could drown. Do not ignore police warnings and be very cautious about trying to drive through flowing water.

Downloaded from www.Manualslib.com manuals search engine

Hydroplaning

Hydroplaning is dangerous. Water can build up under your vehicle's tires so they actually ride on the water. This can happen if the road is wet enough and you are going fast enough. When your vehicle is hydroplaning, it has little or no contact with the road.

There is no hard and fast rule about hydroplaning. The best advice is to slow down when the road is wet.

Other Rainy Weather Tips

Besides slowing down, other wet weather driving tips include:

- Allow extra following distance.
- Pass with caution.
- Keep windshield wiping equipment in good shape.
- Keep the windshield washer fluid reservoir filled.
- Have good tires with proper tread depth. See *Tires on page 5-49*.

Before Leaving on a Long Trip

To prepare your vehicle for a long trip, consider having it serviced by your dealer/retailer before departing.

Things to check on your own include:

- *Windshield Washer Fluid:* Reservoir full? Windows clean — inside and outside?
- *Wiper Blades:* In good shape?
- *Fuel, Engine Oil, Other Fluids:* All levels checked?
- *Lamps:* Do they all work and are lenses clean?
- *Tires:* Are treads good? Are tires inflated to recommended pressure?
- *Weather and Maps:* Safe to travel? Have up-to-date maps?

Highway Hypnosis

Always be alert and pay attention to your surroundings while driving. If you become tired or sleepy, find a safe place to park your vehicle and rest.

Other driving tips include:

- Keep the vehicle well ventilated.
- Keep interior temperature cool.
- Keep your eyes moving — scan the road ahead and to the sides.
- Check the rearview mirror and vehicle instruments often.

Downloaded from www.Manualslib.com manuals search engine

Hill and Mountain Roads

Driving on steep hills or through mountains is different than driving on flat or rolling terrain. Tips for driving in these conditions include:

- Keep your vehicle serviced and in good shape.
- Check all fluid levels and brakes, tires, cooling system, and transmission.
- Going down steep or long hills, shift to a lower gear.

⚠ CAUTION:

If you do not shift down, the brakes could get so hot that they would not work well. You would then have poor braking or even none going down a hill. You could crash. Shift down to let the engine assist the brakes on a steep downhill slope.

⚠ CAUTION:

Coasting downhill in NEUTRAL (N) or with the ignition off is dangerous. The brakes will have to do all the work of slowing down and they could get so hot that they would not work well. You would then have poor braking or even none going down a hill. You could crash. Always have the engine running and your vehicle in gear when you go downhill.

- Stay in your own lane. Do not swing wide or cut across the center of the road. Drive at speeds that let you stay in your own lane.
- Top of hills: Be alert — something could be in your lane (stalled car, accident).
- Pay attention to special road signs (falling rocks area, winding roads, long grades, passing or no-passing zones) and take appropriate action.

Downloaded from www.Manualslib.com manuals search engine

Winter Driving

Here are some tips for winter driving:

- Have your vehicle in good shape for winter.
- You might want to put winter emergency supplies in your vehicle.

Include an ice scraper, a small brush or broom, a supply of windshield washer fluid, a rag, some winter outer clothing, a small shovel, a flashlight, a red cloth, and a couple of reflective warning triangles. And, if you will be driving under severe conditions, include a small bag of sand, a piece of old carpet, or a couple of burlap bags to help provide traction. Be sure you properly secure these items in your vehicle.

Also see *Tires on page 5-49*.

Driving on Snow or Ice

Most of the time, those places where the tires meet the road probably have good traction.

However, if there is snow or ice between the tires and the road, you can have a very slippery situation. You have a lot less traction, or grip, and need to be very careful.

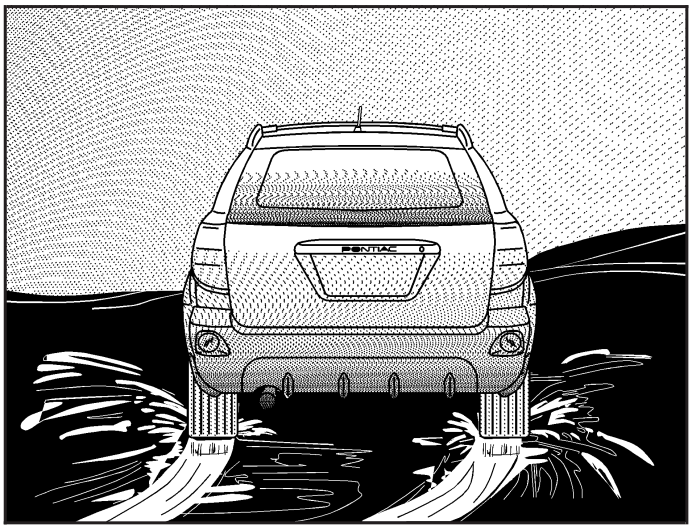

What is the worst time for this? Wet ice. Very cold snow or ice can be slick and hard to drive on. But wet ice can be even more trouble because it can offer the least traction of all. You can get wet ice when it is about freezing, 32°F (0°C), and freezing rain begins to fall. Try to avoid driving on wet ice until salt and sand crews can get there.

Whatever the condition — smooth ice, packed, blowing, or loose snow — drive with caution.

Downloaded from www.Manualslib.com manuals search engine

Accelerate gently. Try not to break the fragile traction. If you accelerate too fast, the drive wheels will spin and polish the surface under the tires even more.

Unless your vehicle has the Antilock Brake System (ABS), you want to brake very gently, too. If you do have ABS, see *Antilock Brake System (ABS) on page 4-4*. ABS improves your vehicle's stability when you make a hard stop on a slippery road. Whether your vehicle has ABS or not, begin stopping sooner than you would on dry pavement. Without ABS, if you feel your vehicle begin to slide, let up on the brakes a little. Push the brake pedal down steadily to get the most traction you can.

Remember, unless your vehicle has ABS, if you brake so hard that the wheels stop rolling, you will just slide. Brake so the wheels always keep rolling and you can still steer.

- Whatever your vehicle's braking system, allow greater distance on any slippery road.
- Watch for slippery spots. The road might be fine until you hit a spot that is covered with ice. On an otherwise clear road, ice patches can appear in shaded areas where the sun cannot reach, such as around clumps of trees, behind buildings, or under bridges. Sometimes the surface of a curve or an overpass can remain icy when the surrounding roads are clear. If you see a patch of ice ahead of you, brake before you are on it. Try not to brake while you are actually on the ice, and avoid sudden steering maneuvers.

If You Are Caught in a Blizzard

If you are stopped by heavy snow, you could be in a serious situation. You should probably stay with your vehicle unless you know for sure that you are near help and you can hike through the snow. Here are some things to do to summon help and keep yourself and your passengers safe:

- Turn on the hazard warning flashers.
- Tie a red cloth to your vehicle to alert police that you have been stopped by the snow.
- Put on extra clothing or wrap a blanket around you. If you do not have blankets or extra clothing, make body insulators from newspapers, burlap bags, rags, floor mats — anything you can wrap around yourself or tuck under your clothing to keep warm.

Downloaded from www.Manualslib.com manuals search engine

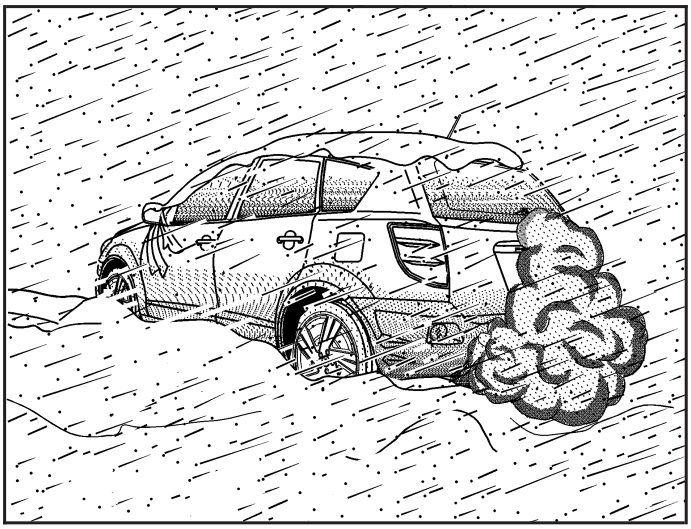

You can run the engine to keep warm, but be careful.

⚠ CAUTION:

Snow can trap exhaust gases under your vehicle. This can cause deadly CO (carbon monoxide) gas to get inside. CO could overcome you and kill you. You cannot see it or smell it, so you might not know it is in your vehicle. Clear away snow from around the base of your vehicle, especially any that is blocking the exhaust pipe. And check around again from time to time to be sure snow does not collect there.

Open a window just a little on the side of the vehicle that is away from the wind. This will help keep CO out.

Run your engine only as long as you must. This saves fuel. When you run the engine, make it go a little faster than just idle. That is, push the accelerator slightly. This uses less fuel for the heat that you get and it keeps the battery charged. You will need a well-charged battery to restart the vehicle, and possibly for signaling later on with the headlamps. Let the heater run for a while.

Downloaded from www.Manualslib.com manuals search engine

Then, shut the engine off and close the window almost all the way to preserve the heat. Start the engine again and repeat this only when you feel really uncomfortable from the cold. But do it as little as possible. Preserve the fuel as long as you can. To help keep warm, you can get out of the vehicle and do some fairly vigorous exercises every half hour or so until help comes.

If Your Vehicle is Stuck in Sand, Mud, Ice, or Snow

Slowly and cautiously spin the wheels to free your vehicle when stuck in sand, mud, ice, or snow. See *Rocking Your Vehicle to Get It Out on page 4-19*.

If your vehicle has a traction system, it can often help to free a stuck vehicle. Refer to your vehicle's traction system in the Index. If the stuck condition is too severe for the traction system to free the vehicle, turn the traction system off and use the rocking method.

⚠ CAUTION:

If you let your vehicle's tires spin at high speed, they can explode, and you or others could be injured. The vehicle can overheat, causing an engine compartment fire or other damage. Spin the wheels as little as possible and avoid going above 35 mph (55 km/h) as shown on the speedometer.

For information about using tire chains on your vehicle, see *Tire Chains on page 5-68*.

Downloaded from www.Manualslib.com manuals search engine

Rocking Your Vehicle to Get It Out

First, turn the steering wheel left and right to clear the area around the front wheels. Turn off any traction or stability system. See *Traction Control System (TCS) on page 4-6* and *StabiliTrak® System on page 4-7*. Then shift back and forth between REVERSE (R) and a forward gear, or with a manual transmission, between FIRST (1) or SECOND (2) and REVERSE (R), spinning the wheels as little as possible. To prevent transmission wear, wait until the wheels stop spinning before shifting gears. Release the accelerator pedal while you shift, and press lightly on the accelerator pedal when the transmission is in gear. By slowly spinning the wheels in the forward and reverse directions, you will cause a rocking motion that could free your vehicle. If that does not get your vehicle out after a few tries, it might need to be towed out. Or, you can use the recovery hook. If your vehicle does need to be towed out, see *Towing Your Vehicle on page 4-25*.

Loading Your Vehicle

It is very important to know how much weight your vehicle can carry. Two labels on your vehicle show how much weight it may properly carry, the Tire and Loading Information label and the Certification label.

⚠ CAUTION:

Do not load your vehicle any heavier than the Gross Vehicle Weight Rating (GVWR), or either the maximum front or rear Gross Axle Weight Rating (GAWR). If you do, parts on your vehicle can break, and it can change the way your vehicle handles. These could cause you to lose control and crash. Also, overloading can shorten the life of your vehicle.

Downloaded from www.Manualslib.com manuals search engine

Tire and Loading Information Label

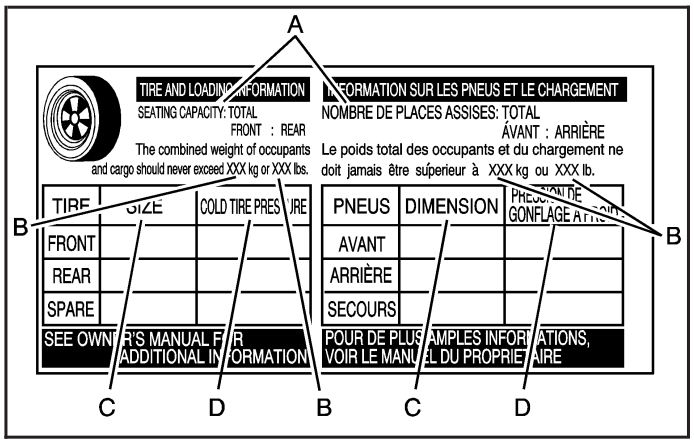

Label Example

A vehicle specific Tire and Loading Information label is attached to the vehicle's center pillar (B-pillar). With the driver's door open you will find the label attached below the door lock post (striker).

The Tire and Loading Information label shows the number of occupant seating positions (A), and the maximum vehicle capacity weight (B) in kilograms and pounds. This weight includes the weight of all occupants, cargo, and all nonfactory-installed options.

The Tire and Loading Information label also shows the tire size of the original equipment tires (C), and the recommended cold tire inflation pressures (D). For more information on tires and inflation see *Tires on page 5-49* and *Inflation - Tire Pressure on page 5-55*.

There is also important loading information on the Certification label. It tells you the Gross Vehicle Weight Rating (GVWR) and the Gross Axle Weight Rating (GAWR) for the front and rear axle. See "Certification Label" later in this section.

Downloaded from www.Manualslib.com manuals search engine

Steps for Determining Correct Load Limit

1. Locate the statement “The combined weight of occupants and cargo should never exceed XXX kg or XXX lbs” on your vehicle’s placard.
2. Determine the combined weight of the driver and passengers that will be riding in your vehicle.
3. Subtract the combined weight of the driver and passengers from XXX kg or XXX lbs.
4. The resulting figure equals the available amount of cargo and luggage load capacity. For example, if the “XXX” amount equals 1400 lbs and there will be five 150 lb passengers in your vehicle, the amount of available cargo and luggage load capacity is 650 lbs (1400 – 750 (5 x 150) = 650 lbs).
5. Determine the combined weight of luggage and cargo being loaded on the vehicle. That weight may not safely exceed the available cargo and luggage load capacity calculated in Step 4.
6. If your vehicle will be towing a trailer, the load from your trailer will be transferred to your vehicle. Consult this manual to determine how this reduces the available cargo and luggage load capacity of your vehicle.

If your vehicle can tow a trailer, see *Towing a Trailer on page 4-27* for important information on towing a trailer, towing safety rules and trailering tips.

Downloaded from www.Manualslib.com manuals search engine

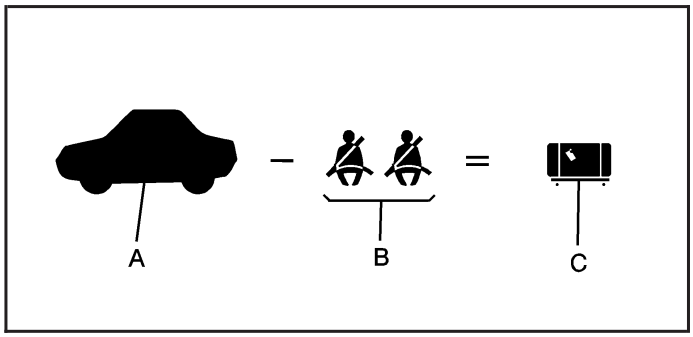

Example 1

Item	Description	Total
A	Vehicle Capacity Weight for Example 1 =	1,000 lbs (453 kg)
B	Subtract Occupant Weight 150 lbs (68 kg) x 2 =	300 lbs (136 kg)
C	Available Occupant and Cargo Weight =	700 lbs (317 kg)

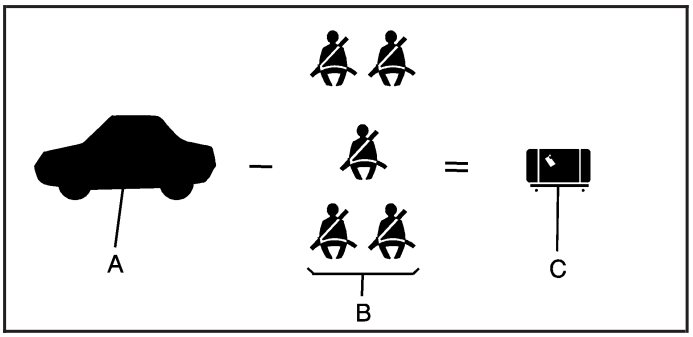

Example 2

Item	Description	Total
A	Vehicle Capacity Weight for Example 2 =	1,000 lbs (453 kg)
B	Subtract Occupant Weight 150 lbs (68 kg) x 5 =	750 lbs (340 kg)
C	Available Cargo Weight =	250 lbs (113 kg)

Downloaded from www.Manualslib.com manuals search engine

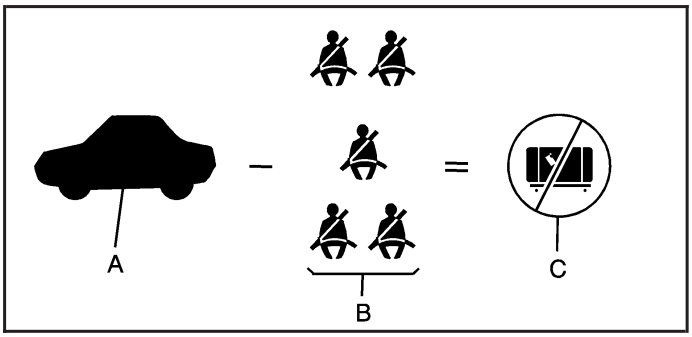

Example 3

Item	Description	Total
A	Vehicle Capacity Weight for Example 3 =	1,000 lbs (453 kg)
B	Subtract Occupant Weight 200 lbs (91 kg) x 5 =	1,000 lbs (453 kg)
C	Available Cargo Weight =	0 lbs (0 kg)

Refer to your vehicle's Tire and Loading Information label for specific information about your vehicle's capacity weight and seating positions. The combined weight of the driver, passengers, and cargo should never exceed your vehicle's maximum vehicle capacity weight.

Certification Label

Label Example

A vehicle specific Certification label is attached to the center pillar, near the driver's door latch. It tells you the gross weight capacity of your vehicle, called the Gross Vehicle Weight Rating (GVWR). The GVWR includes the weight of the vehicle, all occupants, fuel, and cargo. Never exceed the GVWR for your vehicle, or the Gross Axle Weight Rating (GAWR) for either the front or rear axle.

Downloaded from www.Manualslib.com manuals search engine

And, if you do have a heavy load, you should spread it out. See “Steps for Determining Correct Load Limit” earlier in this section.

⚠ CAUTION:

Do not load your vehicle any heavier than the Gross Vehicle Weight Rating (GVWR), or either the maximum front or rear Gross Axle Weight Rating (GAWR). If you do, parts on your vehicle can break, and it can change the way your vehicle handles. These could cause you to lose control and crash. Also, overloading can shorten the life of your vehicle.

Notice: **Overloading your vehicle may cause damage. Repairs would not be covered by your warranty. Do not overload your vehicle.**

If you put things inside your vehicle — like suitcases, tools, packages, or anything else — they will go as fast as the vehicle goes. If you have to stop or turn quickly, or if there is a crash, they will keep going.

⚠ CAUTION:

Things you put inside your vehicle can strike and injure people in a sudden stop or turn, or in a crash.

- **Put things in the rear area of your vehicle. Try to spread the weight evenly. If you have fold-down rear seats, you will find four anchors on the back wall of your trunk. You can use these anchors to tie down lighter loads. They are not strong enough for heavy things, however, so put them as far forward as you can in the trunk or rear area.**
- **Never stack heavier things, like suitcases, inside the vehicle so that some of them are above the tops of the seats.**
- **Do not leave an unsecured child restraint in your vehicle.**
- **When you carry something inside the vehicle, secure it whenever you can.**
- **Do not leave a seat folded down unless you need to.**

Downloaded from www.Manualslib.com manuals search engine

Towing

Towing Your Vehicle

Consult your dealer/retailer or a professional towing service if you need to have your disabled vehicle towed. See *Roadside Assistance Program on page 7-6*.

If you want to tow your vehicle behind another vehicle for recreational purposes (such as behind a motorhome), see “Recreational Vehicle Towing” following.

Recreational Vehicle Towing

Recreational vehicle towing means towing your vehicle behind another vehicle – such as behind a motorhome. The two most common types of recreational vehicle towing are known as “dinghy towing” (towing your vehicle with all four wheels on the ground) and “dolly towing” (towing your vehicle with two wheels on the ground and two wheels up on a device known as a “dolly”).

With the proper preparation and equipment, many vehicles can be towed in these ways. See “Dinghy Towing” and “Dolly Towing,” following.

Here are some important things to consider before you do recreational vehicle towing:

- What’s the towing capacity of the towing vehicle? Be sure you read the tow vehicle manufacturer’s recommendations.
- How far will you tow? Some vehicles have restrictions on how far and how long they can tow.
- Do you have the proper towing equipment? See your dealer or trailering professional for additional advice and equipment recommendations.
- Is your vehicle ready to be towed? Just as you would prepare your vehicle for a long trip, you’ll want to make sure your vehicle is prepared to be towed. See *Before Leaving on a Long Trip on page 4-13*.

Downloaded from www.Manualslib.com manuals search engine

Dinghy Towing

If your vehicle has an automatic transaxle, it cannot be dinghy towed. See “Dolly Towing” for more information regarding towing your vehicle.

If your vehicle has a manual transaxle, it can be dinghy towed.

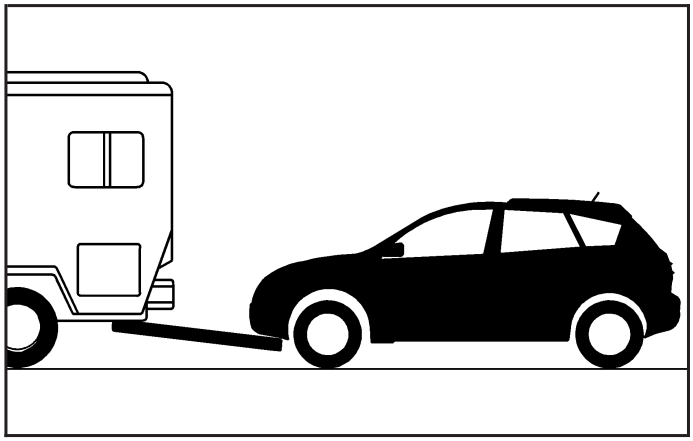

When dinghy towing, be sure to follow the posted legal speed limit.

1. Put the shift lever in NEUTRAL.
2. Turn the ignition to ACC to avoid locking the steering wheel. Make sure the audio system is turned off and that nothing is plugged into the power outlets.
3. Release the parking brake.

After dinghy towing, let the engine idle for more than three minutes before driving the vehicle.

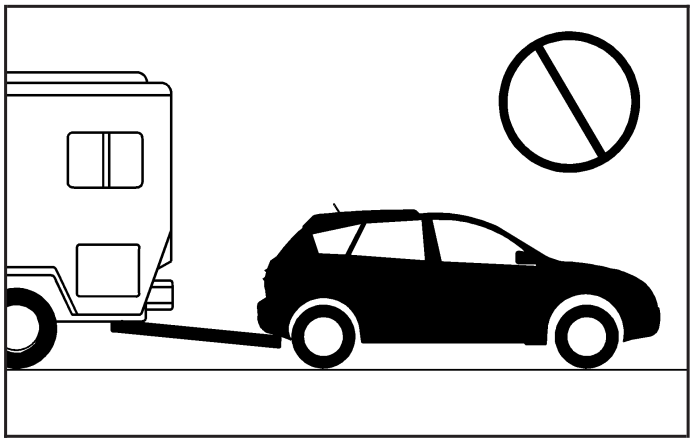

Do not tow your vehicle from the rear. Your vehicle could be badly damaged and the repairs would not be covered by your warranty.

Downloaded from www.Manualslib.com manuals search engine

Dolly Towing

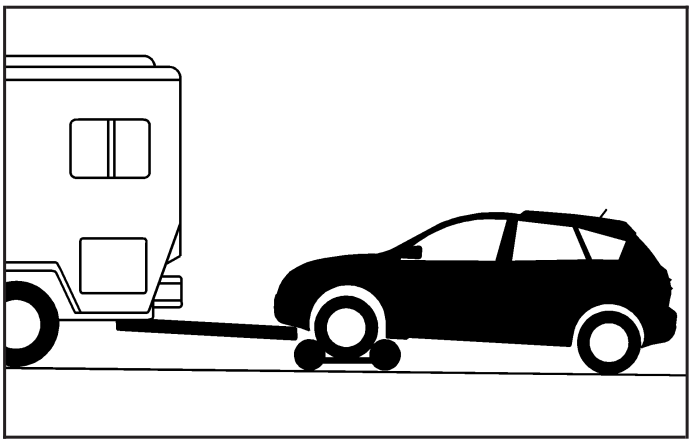

To tow your vehicle using a dolly, follow these steps:

1. Put the front wheels on a dolly.
2. Put the vehicle in PARK (P) for an automatic transaxle and in NEUTRAL for a manual transaxle.
3. Clamp the steering wheel in a straight-ahead position with a clamping device designed for towing.
4. Release the parking brake.

Towing a Trailer

⚠ CAUTION:

If you do not use the correct equipment and drive properly, you can lose control when you pull a trailer. For example, if the trailer is too heavy, the brakes may not work well — or even at all. You and your passengers could be seriously injured. You may also damage your vehicle; the resulting repairs would not be covered by your warranty. Pull a trailer only if you have followed all the steps in this section. Ask your dealer/retailer for advice and information about towing a trailer with your vehicle.

Your vehicle can tow a trailer if it is equipped with the proper trailer towing equipment. To identify the vehicle trailering capacity of your vehicle, you should read the information in “Weight of the Trailer” that appears later in this section. Trailering is different than just driving your vehicle by itself. Trailering means changes in handling, acceleration, braking, durability and fuel economy. Successful, safe trailering takes correct equipment, and it has to be used properly.

Downloaded from www.Manualslib.com manuals search engine

That's the reason for this part. In it are many time-tested, important trailering tips and safety rules. Many of these are important for your safety and that of your passengers. So please read this section carefully before you pull a trailer.

Load-pulling components such as the engine, transaxle, wheel assemblies and tires are forced to work harder against the drag of the added weight. The engine is required to operate at relatively higher speeds and under greater loads, generating extra heat. What's more, the trailer adds considerably to wind resistance, increasing the pulling requirements.

If You Do Decide To Pull A Trailer

If you do, here are some important points:

- There are many different laws, including speed limit restrictions, having to do with trailering. Make sure your rig will be legal, not only where you live but also where you'll be driving. A good source for this information can be state or provincial police.
- Consider using a sway control. You can ask a hitch dealer about sway controls.
- Don't tow a trailer at all during the first 1,000 miles (1 600 km) your new vehicle is driven. Your engine, axle or other parts could be damaged.
- Then, during the first 500 miles (800 km) that you tow a trailer, don't drive over 50 mph (80 km/h) and don't make starts at full throttle. This helps your engine and other parts of your vehicle wear in at the heavier loads.
- Obey speed limit restrictions when towing a trailer. Don't drive faster than the maximum posted speed for trailers, or no more than 55 mph (90 km/h), to save wear on your vehicle's parts.

Three important considerations have to do with weight:

- the weight of the trailer
- the weight of the trailer tongue
- and the total weight on your vehicle's tires

Downloaded from www.Manualslib.com manuals search engine

Weight of the Trailer

How heavy can a trailer safely be?

It should never weigh more than 1,500 lbs (680 kg). But even that can be too heavy.

It depends on how you plan to use your rig. For example, speed, altitude, road grades, outside temperature and how much your vehicle is used to pull a trailer are all important. It can also depend on any special equipment that you have on your vehicle, and the amount of tongue weight the vehicle can carry. See “Weight of the Trailer Tongue” later in this section for more information.

Maximum trailer weight is calculated assuming only the driver is in the tow vehicle and it has all the required trailering equipment. The weight of additional optional equipment, passengers and cargo in the tow vehicle must be subtracted from the maximum trailer weight.

You can ask your dealer for our trailering information or advice, or you can write us at our Customer Assistance Offices. See *Customer Assistance Offices on page 7-5* for more information.

Weight of the Trailer Tongue

The tongue load (A) of any trailer is an important weight to measure because it affects the total or gross weight of your vehicle. The Gross Vehicle Weight (GVW) includes the curb weight of the vehicle, any cargo you may carry in it, and the people who will be riding in the vehicle. And if you tow a trailer, you must add the tongue load to the GVW because your vehicle will be carrying that weight, too. See *Loading Your Vehicle on page 4-19* for more information about your vehicle’s maximum load capacity.

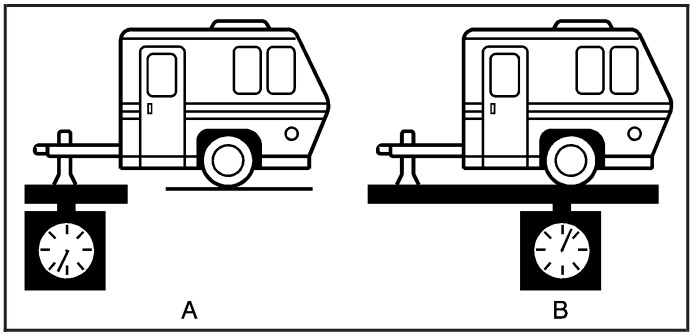

If you’re using a weight-carrying hitch or a weight-distributing hitch, the trailer tongue (A) should weigh 10 to 15 percent of the total loaded trailer weight (B).

After you have loaded your trailer, weigh the trailer and then the tongue, separately, to see if the weights are proper. If they are not, you may be able to get them right simply by moving some items around in the trailer.

Downloaded from www.Manualslib.com manuals search engine

Total Weight on Your Vehicle's Tires

Be sure your vehicle's tires are inflated to the upper limit for cold tires. You'll find these numbers on the Tire and Loading Information label located on the vehicle's center pillar (B-pillar). See *Loading Your Vehicle on page 4-19*. Then be sure you do not go over the GVW limit for your vehicle, including the weight of the trailer tongue.

Hitches

It's important to have the correct hitch equipment. Crosswinds, large trucks going by and rough roads are a few reasons why you'll need the right hitch. Here are some rules to follow:

- Don't let the steel in a hitch contact the aluminum on your bumper. If you do, the two will corrode. You can use something like paint or plastic tape to separate the steel and aluminum. The same steel to aluminum problem can happen with fasteners too.
- Will you have to make any holes in the body of your vehicle when you install a trailer hitch? If you do, then be sure to seal the holes later when you remove the hitch. If you don't seal them, deadly carbon monoxide (CO) from your exhaust can get into your vehicle. See *Engine Exhaust on page 2-32*. Dirt and water can too.

Safety Chains

You should always attach chains between your vehicle and your trailer. Cross the safety chains under the tongue of the trailer so that the tongue will not drop to the road if it becomes separated from the hitch. Instructions about safety chains may be provided by the hitch manufacturer or by the trailer manufacturer. Follow the manufacturer's recommendation for attaching safety chains and do not attach them to the bumper. Always leave just enough slack so you can turn with your rig. And, never allow safety chains to drag on the ground.

Trailer Brakes

Does your trailer have its own brakes?

Be sure to read and follow the instructions for the trailer brakes so you'll be able to install, adjust and maintain them properly. And, if you have anti-lock brakes, do not try to tap into your vehicle's brake system. If you do, both systems won't work well, or at all.

Downloaded from www.Manualslib.com manuals search engine

Driving with a Trailer

Towing a trailer requires a certain amount of experience. Before setting out for the open road, you'll want to get to know your rig. Acquaint yourself with the feel of handling and braking with the added weight of the trailer. And always keep in mind that the vehicle you are driving is now a good deal longer and not nearly as responsive as your vehicle is by itself.

Before you start, check the trailer hitch, platform and attachments, safety chains, electrical connector, lamps, tires and mirror adjustment. If the trailer has electric brakes, start your vehicle and trailer moving and then apply the trailer brake controller by hand to be sure the brakes are working. This lets you check your electrical connection at the same time.

During your trip, check occasionally to be sure that the load is secure, and that the lamps and any trailer brakes are still working.

Following Distance

Stay at least twice as far behind the vehicle ahead as you would when driving your vehicle without a trailer. This can help you avoid situations that require heavy braking and sudden turns.

Passing

You'll need more passing distance up ahead when you're towing a trailer. And, because you're a good deal longer, you'll need to go much farther beyond the passed vehicle before you can return to your lane.

Backing Up

Hold the bottom of the steering wheel with one hand. Then, to move the trailer to the left, just move that hand to the left. To move the trailer to the right, move your hand to the right. Always back up slowly and, if possible, have someone guide you.

Making Turns

Notice: **Making very sharp turns while trailering could cause the trailer to come in contact with the vehicle. Your vehicle could be damaged. Avoid making very sharp turns while trailering.**

When you're turning with a trailer, make wider turns than normal. Do this so your trailer won't strike soft shoulders, curbs, road signs, trees or other objects. Avoid jerky or sudden maneuvers. Signal well in advance.

Downloaded from www.Manualslib.com manuals search engine

Turn Signals When Towing a Trailer

When you tow a trailer, your vehicle may need a different turn signal flasher and/or extra wiring. Check with your dealer. The arrows on your instrument panel will flash whenever you signal a turn or lane change. Properly hooked up, the trailer lamps will also flash, telling other drivers you're about to turn, change lanes or stop.

When towing a trailer, the arrows on your instrument panel will flash for turns even if the bulbs on the trailer are burned out. Thus, you may think drivers behind you are seeing your signal when they are not. It's important to check occasionally to be sure the trailer bulbs are still working.

Driving On Grades

Reduce speed and shift to a lower gear *before* you start down a long or steep downgrade. If you don't shift down, you might have to use your brakes so much that they would get hot and no longer work well.

On a long uphill grade, shift down and reduce your speed to around 45 mph (70 km/h) to reduce the possibility of the engine and the transaxle overheating.

Parking on Hills

⚠ CAUTION:

You really should not park your vehicle, with a trailer attached, on a hill. If something goes wrong, your rig could start to move. People can be injured, and both your vehicle and the trailer can be damaged.

But if you ever have to park your rig on a hill, here's how to do it:

1. Apply your regular brakes, but don't shift into PARK (P) for an automatic transaxle or into gear for a manual transaxle, yet. When parking uphill, turn your wheels away from the curb. When parking downhill, turn your wheels into the curb.
2. Have someone place chocks under the trailer wheels.
3. When the chocks are in place, release the regular brakes until the chocks absorb the load.
4. Reapply the regular brakes. Then apply your parking brake and shift into PARK (P) for an automatic transaxle or REVERSE (R) for a manual transaxle.
5. Release the regular brakes.

Downloaded from www.Manualslib.com manuals search engine

When You Are Ready to Leave After Parking on a Hill

1. Apply your regular brakes and hold the pedal down while you:
   - start your engine
   - shift into a gear, and
   - release the parking brake
2. Let up on the brake pedal.
3. Drive slowly until the trailer is clear of the chocks.
4. Stop and have someone pick up and store the chocks.

Maintenance When Trailer Towing

Your vehicle will need service more often when you're pulling a trailer. See the Maintenance Schedule for more on this. Things that are especially important in trailer operation are automatic transaxle fluid (don't overfill), engine oil, drive belt, cooling system and brake system. Each of these is covered in this manual, and the Index will help you find them quickly. If you're trailering, it's a good idea to review this information before you start your trip.

Check periodically to see that all hitch nuts and bolts are tight.

Engine Cooling When Trailer Towing

Your cooling system may temporarily overheat during severe operating conditions. See *Engine Overheating on page 5-26*.

Downloaded from www.Manualslib.com manuals search engine

✍ NOTES

Downloaded from www.Manualslib.com manuals search engine

Section 5 Service and Appearance Care

Service 5-3
Accessories and Modifications 5-3
California Proposition 65 Warning 5-3
California Perchlorate Materials Requirements 5-4
Doing Your Own Service Work 5-4
Adding Equipment to the Outside of Your Vehicle 5-5

Fuel 5-5
Gasoline Octane 5-5
Gasoline Specifications 5-5
California Fuel 5-5
Additives 5-6
Fuels in Foreign Countries 5-6
Filling the Tank 5-7
Filling a Portable Fuel Container 5-9

Checking Things Under the Hood 5-10
Hood Release 5-10
Engine Compartment Overview 5-12
Engine Oil 5-13
Engine Air Cleaner/Filter 5-17
Automatic Transmission Fluid 5-19
Manual Transmission Fluid 5-21
Hydraulic Clutch 5-22
Engine Coolant 5-23
Radiator Pressure Cap 5-26
Engine Overheating 5-26
Cooling System 5-28
Power Steering Fluid 5-33
Windshield Washer Fluid 5-34
Brakes 5-35
Battery 5-38
Jump Starting 5-38

Headlamp Aiming 5-42

Bulb Replacement 5-43
Halogen Bulbs 5-43
Headlamps, Front Turn Signal, and Parking Lamps 5-43
Center High-Mounted Stoplamp (CHMSL) 5-45
Taillamps, Turn Signal, and Stoplamps 5-46
Back-Up Lamps 5-47
Replacement Bulbs 5-48

Windshield Wiper Blade Replacement 5-48

Tires 5-49
Tire Sidewall Labeling 5-50
Tire Terminology and Definitions 5-52
Inflation - Tire Pressure 5-55
Tire Pressure Monitor System 5-57
Tire Pressure Monitor Operation 5-58
Tire Inspection and Rotation 5-61
When It Is Time for New Tires 5-63
Buying New Tires 5-63

Downloaded from www.Manualslib.com manuals search engine

Section 5 Service and Appearance Care

Different Size Tires and Wheels 5-65
Uniform Tire Quality Grading 5-65
Wheel Alignment and Tire Balance 5-67
Wheel Replacement 5-67
Tire Chains 5-68
If a Tire Goes Flat 5-69
Changing a Flat Tire 5-70
Removing the Spare Tire and Tools 5-71
Removing the Flat Tire and Installing the Spare Tire 5-73
Storing a Flat or Spare Tire and Tools 5-79
Compact Spare Tire 5-81

Appearance Care 5-82
Interior Cleaning 5-82
Fabric/Carpet 5-83
Leather 5-84
Instrument Panel, Vinyl, and Other Plastic Surfaces 5-84
Care of Safety Belts 5-85
Weatherstrips 5-85
Washing Your Vehicle 5-85
Cleaning Exterior Lamps/Lenses 5-86
Finish Care 5-86
Windshield, Backglass, and Wiper Blades 5-87
Aluminum Wheels 5-87
Tires 5-88
Sheet Metal Damage 5-88
Finish Damage 5-88
Underbody Maintenance 5-88
Chemical Paint Spotting 5-88
Vehicle Care/Appearance Materials 5-89

Vehicle Identification 5-90
Vehicle Identification Number (VIN) 5-90
Service Parts Identification Label 5-90

Electrical System 5-90
Add-On Electrical Equipment 5-90
Headlamp Wiring 5-91
Windshield Wiper Fuses 5-91
Power Windows and Other Power Options 5-91
Fuses and Circuit Breakers 5-91
Instrument Panel Fuse Block 5-92
Engine Compartment Fuse Block 5-93

Capacities and Specifications 5-95

Maintenance Replacement Parts 5-96
Engine Drive Belt Routing 5-97

Downloaded from www.Manualslib.com manuals search engine

Service

For service and parts needs, visit your dealer/retailer. You will receive genuine GM parts and GM-trained and supported service people.

Genuine GM parts have one of these marks:

Accessories and Modifications

When non-dealer/non-retailer accessories are added to your vehicle they can affect your vehicle's performance and safety, including such things as, airbags, braking, stability, ride and handling, emissions systems, aerodynamics, durability, and electronic systems like antilock brakes, traction control and stability control. Some of these accessories could even cause malfunction or damage not covered by warranty.

GM Accessories are designed to complement and function with other systems on your vehicle. Your GM dealer/retailer can accessorize your vehicle using genuine GM Accessories. When you go to your GM dealer/retailer and ask for GM Accessories, you will know that GM-trained and supported service technicians will perform the work using genuine GM Accessories.

Also, see *Adding Equipment to Your Airbag-Equipped Vehicle on page 1-65*.

California Proposition 65 Warning

Most motor vehicles, including this one, contain and/or emit chemicals known to the State of California to cause cancer and birth defects or other reproductive harm. Engine exhaust, many parts and systems (including some inside the vehicle), many fluids, and some component wear by-products contain and/or emit these chemicals.

Downloaded from www.Manualslib.com manuals search engine

California Perchlorate Materials Requirements

Certain types of automotive applications, such as airbag initiators, seat belt pretensioners, and lithium batteries contained in remote keyless entry transmitters, may contain perchlorate materials. Special handling may be necessary. For additional information, see www.dtsc.ca.gov/hazardouswaste/perchlorate.

Doing Your Own Service Work

⚠ CAUTION:

You can be injured and your vehicle could be damaged if you try to do service work on a vehicle without knowing enough about it.

- **Be sure you have sufficient knowledge, experience, the proper replacement parts, and tools before you attempt any vehicle maintenance task.**
- **Be sure to use the proper nuts, bolts, and other fasteners. English and metric fasteners can be easily confused. If you use the wrong fasteners, parts can later break or fall off. You could be hurt.**

If you want to do some of your own service work, you will want to use the proper service manual. It tells you much more about how to service your vehicle than this manual can. To order the proper service manual, see *Service Publications Ordering Information on page 7-15*.

Your vehicle has an airbag system. Before attempting to do your own service work, see *Servicing Your Airbag-Equipped Vehicle on page 1-64*.

Downloaded from www.Manualslib.com manuals search engine

You should keep a record with all parts receipts and list the mileage and the date of any service work you perform. See *Part E: Maintenance Record on page 6-21*.

Adding Equipment to the Outside of Your Vehicle

Things you might add to the outside of your vehicle can affect the airflow around it. This can cause wind noise and can affect fuel economy and windshield washer performance. Check with your dealer/retailer before adding equipment to the outside of your vehicle.

Fuel

Use of the recommended fuel is an important part of the proper maintenance of your vehicle. To help keep the engine clean and maintain optimum vehicle performance, we recommend the use of gasoline advertised as TOP TIER Detergent Gasoline.

Gasoline Octane

Use regular unleaded gasoline with a posted octane rating of 87 or higher. If the octane rating is less than 87, you might notice an audible knocking noise when you drive, commonly referred to as spark knock. If this occurs, use a gasoline rated at 87 octane or higher as soon as possible. If you are using gasoline rated at 87 octane or higher and you hear heavy knocking, the engine needs service.

Gasoline Specifications

At a minimum, gasoline should meet ASTM specification D 4814 in the United States or CAN/CGSB-3.5 or 3.511 in Canada. Some gasolines contain an octane-enhancing additive called methylcyclopentadienyl manganese tricarbonyl (MMT). We recommend against the use of gasolines containing MMT. See *Additives on page 5-6* for additional information.

California Fuel

If your vehicle is certified to meet California Emissions Standards, it is designed to operate on fuels that meet California specifications. See the underhood emission control label. If this fuel is not available in states adopting California emissions standards, your vehicle will operate satisfactorily on fuels meeting federal specifications, but emission control system performance might be affected. The malfunction indicator lamp could turn on and your vehicle might fail a smog-check test. See *Malfunction Indicator Lamp on page 3-36*. If this occurs, return to your authorized dealer/retailer for diagnosis. If it is determined that the condition is caused by the type of fuel used, repairs might not be covered by your warranty.

Downloaded from www.Manualslib.com manuals search engine

Additives

To provide cleaner air, all gasolines in the United States are now required to contain additives that help prevent engine and fuel system deposits from forming, allowing the emission control system to work properly. In most cases, you should not have to add anything to the fuel. However, some gasolines contain only the minimum amount of additive required to meet U.S. Environmental Protection Agency regulations. To help keep fuel injectors and intake valves clean, or if your vehicle experiences problems due to dirty injectors or valves, look for gasoline that is advertised as TOP TIER Detergent Gasoline. Also, your dealer/retailer has additives that will help correct and prevent most deposit-related problems.

Gasolines containing oxygenates, such as ethers and ethanol, and reformulated gasolines might be available in your area. We recommend that you use these gasolines, if they comply with the specifications described earlier. However, E85 (85% ethanol) and other fuels containing more than 10% ethanol must not be used in vehicles that were not designed for those fuels.

Notice: **Your vehicle was not designed for fuel that contains methanol. Do not use fuel containing methanol. It can corrode metal parts in the fuel system and also damage plastic and rubber parts. That damage would not be covered under your warranty.**

Some gasolines that are not reformulated for low emissions can contain an octane-enhancing additive called methylcyclopentadienyl manganese tricarbonyl (MMT); ask the attendant where you buy gasoline whether the fuel contains MMT. We recommend against the use of such gasolines. Fuels containing MMT can reduce the life of spark plugs and the performance of the emission control system could be affected. The malfunction indicator lamp might turn on. If this occurs, return to your dealer/retailer for service.

Fuels in Foreign Countries

If you plan on driving in another country outside the United States or Canada, the proper fuel might be hard to find. Never use leaded gasoline or any other fuel not recommended in the previous text on fuel. Costly repairs caused by use of improper fuel would not be covered by your warranty.

To check the fuel availability, ask an auto club, or contact a major oil company that does business in the country where you will be driving.

Downloaded from www.Manualslib.com manuals search engine

Filling the Tank

⚠ CAUTION:

Fuel vapor burns violently and a fuel fire can cause bad injuries. To help avoid injuries to you and others, read and follow all the instructions on the pump island. Turn off your engine when you are refueling. Do not smoke if you are near fuel or refueling your vehicle. Do not use cellular phones. Keep sparks, flames, and smoking materials away from fuel. Do not leave the fuel pump unattended when refueling your vehicle. This is against the law in some places. Do not re-enter the vehicle while pumping fuel. Keep children away from the fuel pump; never let children pump fuel.

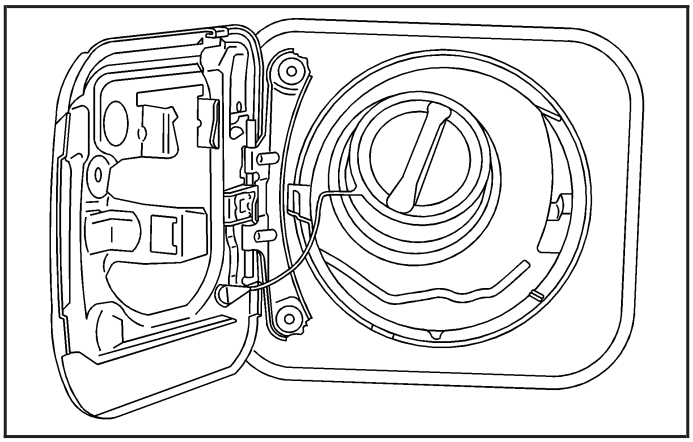

The tethered fuel cap is located behind a hinged fuel door on the driver's side of the vehicle.

Downloaded from www.Manualslib.com manuals search engine

The fuel door release lever is located near the floor under the driver's seat on the outboard side.

To remove the fuel cap, turn it slowly counterclockwise. On some vehicles you may have to push in while turning the cap.

While refueling, hang the fuel cap inside of the fuel door.

⚠ CAUTION:

Fuel can spray out on you if you open the fuel cap too quickly. If you spill fuel and then something ignites it, you could be badly burned. This spray can happen if your tank is nearly full, and is more likely in hot weather. Open the fuel cap slowly and wait for any hiss noise to stop. Then unscrew the cap all the way.

Be careful not to spill fuel. Do not top off or overfill the tank, and wait a few seconds after you have finished pumping before removing the nozzle. Clean fuel from painted surfaces as soon as possible. See *Washing Your Vehicle on page 5-85*.

When replacing the fuel cap, turn it clockwise until it clicks. Make sure the cap is fully installed. The diagnostic system can determine if the fuel cap has been left off or improperly installed. This would allow fuel to evaporate into the atmosphere. See *Malfunction Indicator Lamp on page 3-36*.

Downloaded from www.Manualslib.com manuals search engine

⚠ CAUTION:

If a fire starts while you are refueling, do not remove the nozzle. Shut off the flow of fuel by shutting off the pump or by notifying the station attendant. Leave the area immediately.

Notice: **If you need a new fuel cap, be sure to get the right type. Your dealer/retailer can get one for you. If you get the wrong type, it may not fit properly. This may cause your malfunction indicator lamp to light and may damage your fuel tank and emissions system. See *Malfunction Indicator Lamp on page 3-36*.**

Filling a Portable Fuel Container

⚠ CAUTION:

Never fill a portable fuel container while it is in your vehicle. Static electricity discharge from the container can ignite the fuel vapor. You can be badly burned and your vehicle damaged if this occurs. To help avoid injury to you and others:

- **Dispense fuel only into approved containers.**
- **Do not fill a container while it is inside a vehicle, in a vehicle's trunk, pickup bed, or on any surface other than the ground.**
- **Bring the fill nozzle in contact with the inside of the fill opening before operating the nozzle. Contact should be maintained until the filling is complete.**
- **Do not smoke while pumping fuel.**
- **Do not use a cellular phone while pumping fuel.**

Downloaded from www.Manualslib.com manuals search engine

Checking Things Under the Hood

⚠ CAUTION:

An electric fan under the hood can start up and injure you even when the engine is not running. Keep hands, clothing, and tools away from any underhood electric fan.

⚠ CAUTION:

Things that burn can get on hot engine parts and start a fire. These include liquids like fuel, oil, coolant, brake fluid, windshield washer and other fluids, and plastic or rubber. You or others could be burned. Be careful not to drop or spill things that will burn onto a hot engine.

Hood Release

To open the hood, do the following:

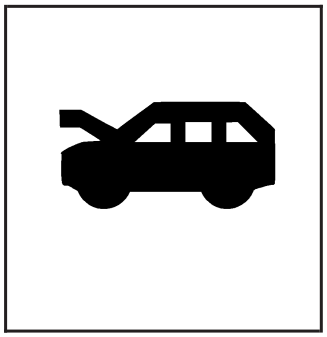

1. Pull the release handle with this symbol on it. It is located below the instrument panel to the left of the steering wheel.

Downloaded from www.Manualslib.com manuals search engine

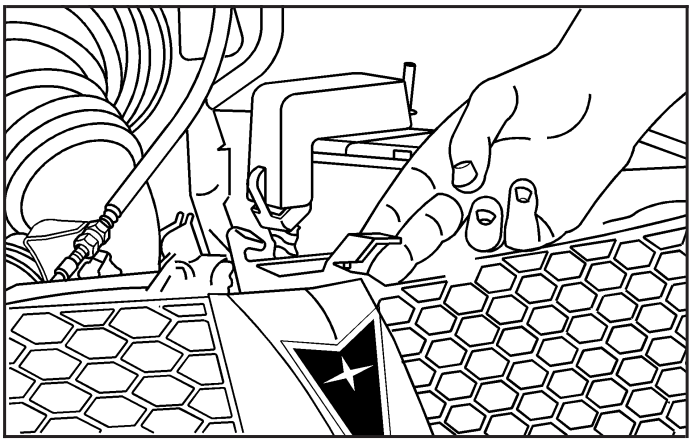

2. Then go to the front of the vehicle and pull up on the secondary hood release. The lever is located near the middle of the hood.
3. Lift the hood.
4. Release the hood prop rod from its retainer and put it into the slot in the hood. To insert the hood prop rod into the slot, move it straight up. If it is moved to the side or toward the inside of the vehicle, it may become detached.

Before closing the hood, be sure all the filler caps are on properly. Make sure to return the hood prop rod carefully back to its retainer to avoid damaging the vehicle.

Downloaded from www.Manualslib.com manuals search engine

Engine Compartment Overview

When you open the hood, here is what you will see:

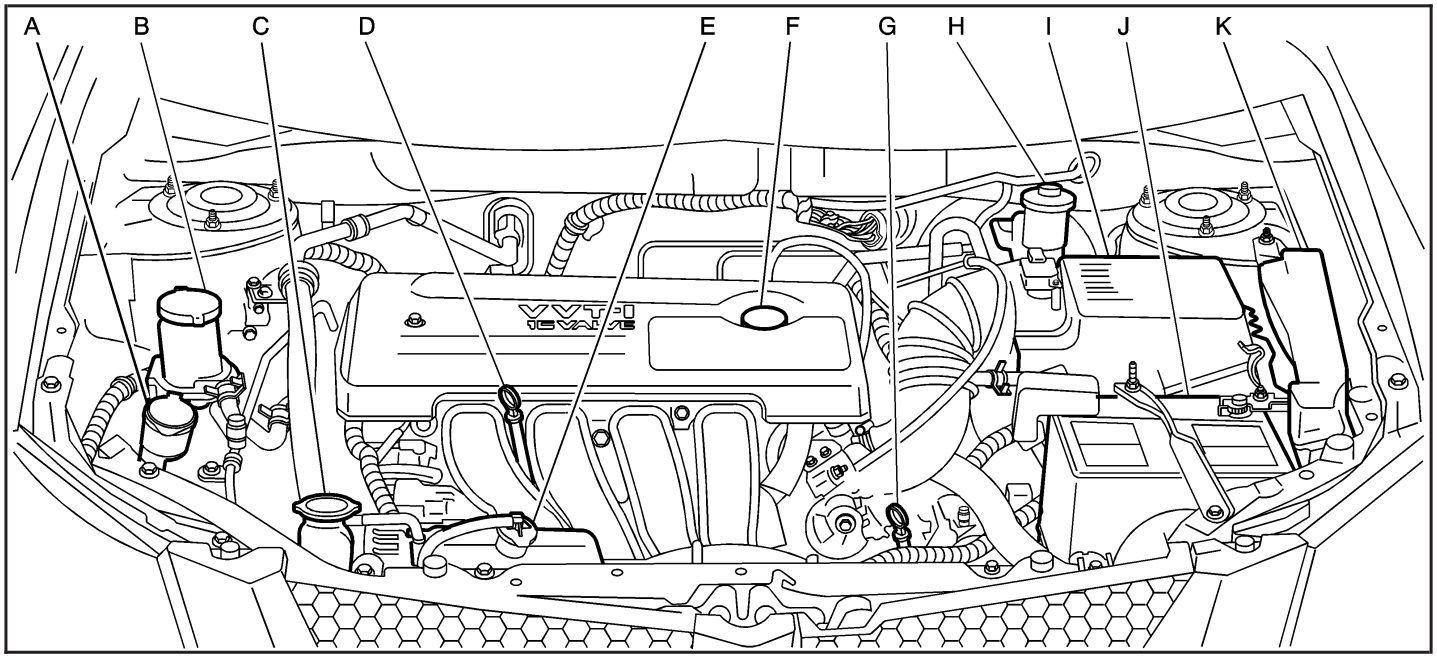

Downloaded from www.Manualslib.com manuals search engine

A. Windshield Washer Fluid Reservoir. See “Adding Washer Fluid” under *Windshield Washer Fluid on page 5-34*.

B. Power Steering Fluid Reservoir. See *Power Steering Fluid on page 5-33*.

C. Radiator Pressure Cap. See *Radiator Pressure Cap on page 5-26*.

D. Engine Oil Dipstick. See “Checking Engine Oil” under *Engine Oil on page 5-13*.

E. Coolant Recovery Tank. See *Cooling System on page 5-28*.

F. Engine Oil Fill Cap. See “When to Add Engine Oil” under *Engine Oil on page 5-13*.

G. Automatic Transmission Fluid Dipstick (If Equipped). See “Checking the Fluid Level” under *Automatic Transmission Fluid on page 5-19*.

H. Brake Master Cylinder Reservoir and Hydraulic Clutch (If Equipped). See “Brake Fluid” under *Brakes on page 5-35* and *Hydraulic Clutch on page 5-22*.

I. Engine Air Cleaner/Filter. See *Engine Air Cleaner/Filter on page 5-17*.

J. Battery. See *Battery on page 5-38*.

K. Engine Compartment Fuse Block. See *Engine Compartment Fuse Block on page 5-93*.

Engine Oil

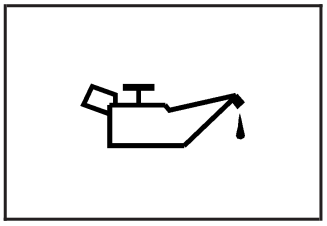

If the engine oil pressure light appears on the instrument cluster, check the engine oil level right away.

For more information, see *Oil Pressure Light on page 3-38*. You should check the engine oil level regularly; this is an added reminder.

Checking Engine Oil

It is a good idea to check the engine oil every time you get fuel. In order to get an accurate reading, the oil must be warm and the vehicle must be on level ground.

The engine oil dipstick handle is a yellow loop. See *Engine Compartment Overview on page 5-12* for the location of the engine oil dipstick.

1. Turn off the engine and give the oil several minutes to drain back into the oil pan. If you do not do this, the oil dipstick might not show the actual level.
2. Pull out the dipstick and clean it with a paper towel or cloth, then push it back in all the way. Remove it again, keeping the tip down, and check the level.

Downloaded from www.Manualslib.com manuals search engine

When to Add Engine Oil

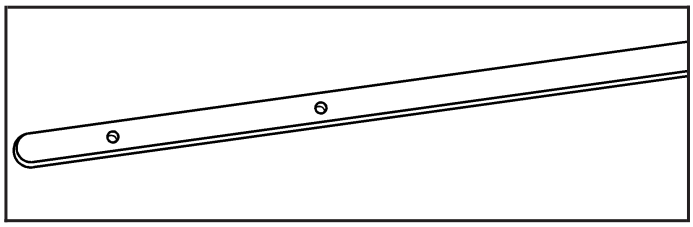

If the oil is below the indent at the tip of the dipstick, add at least one quart/liter of the recommended oil. This section explains what kind of oil to use. For engine oil crankcase capacity, see *Capacities and Specifications on page 5-95*.

Notice: **Do not add too much oil. If the engine has so much oil that the oil level gets above the upper hole, the engine could be damaged.**

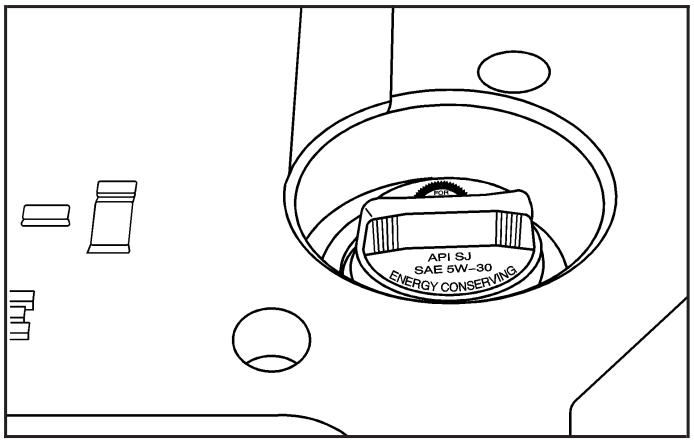

See *Engine Compartment Overview on page 5-12* for the location of the engine oil fill cap.

Be sure to add enough oil to put the level somewhere in the proper operating range. Push the dipstick all the way back in when you are through.

Downloaded from www.Manualslib.com manuals search engine

What Kind of Engine Oil to Use

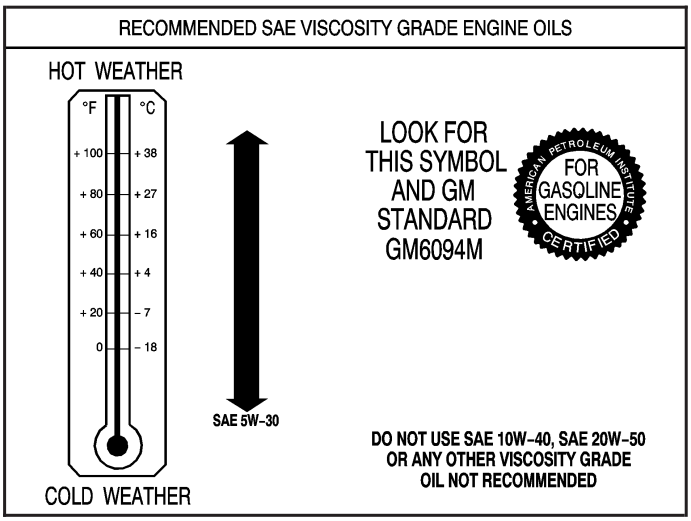

Look for three things:

- GM6094M
  Your vehicle's engine requires oil meeting GM Standard GM6094M. Look for and use only an oil that meets GM Standard GM6094M.
- SAE 5W-30
  As shown in the viscosity chart, SAE 5W-30 is best for your vehicle.
  These numbers on an oil container show its viscosity, or thickness. Do not use other viscosity oils such as SAE 20W-50.

- Oils meeting these requirements should have the starburst symbol on the container. This symbol indicates that the oil has been certified by the American Petroleum Institute (API).

Look for this information on the oil container, and use only those oils that are identified as meeting GM Standard GM6094M and have the starburst symbol on the front of the oil container.

Notice: **Use only engine oil identified as meeting GM Standard GM6094M and showing the American Petroleum Institute Certified For Gasoline Engines starburst symbol. Failure to use the recommended oil can result in engine damage not covered by your warranty.**

If you are in an area of extreme cold, where the temperature falls below –20°F (–29°C), it is recommend that you use either an SAE 5W-30 synthetic oil or an SAE 0W-30 oil. Both provide easier cold starting and better protection for the engine at extremely low temperatures.

Downloaded from www.Manualslib.com manuals search engine

Engine Oil Additives

Do not add anything to the oil. The recommended oils with the starburst symbol that meet GM Standard GM6094M are all you need for good performance and engine protection.

When to Change Engine Oil

Change the oil and filter every 5,000 miles (8 000 km) or 3 months, whichever occurs first. See *Scheduled Maintenance on page 6-4*.

What to Do with Used Oil

Used engine oil contains certain elements that can be unhealthy for your skin and could even cause cancer. Do not let used oil stay on your skin for very long. Clean your skin and nails with soap and water, or a good hand cleaner. Wash or properly dispose of clothing or rags containing used engine oil. See the manufacturer's warnings about the use and disposal of oil products.

Used oil can be a threat to the environment. If you change your own oil, be sure to drain all the oil from the filter before disposal. Never dispose of oil by putting it in the trash, pouring it on the ground, into sewers, or into streams or bodies of water. Instead, recycle it by taking it to a place that collects used oil. If you have a problem properly disposing of used oil, ask your dealer/retailer, a service station, or a local recycling center for help.

Downloaded from www.Manualslib.com manuals search engine

Engine Air Cleaner/Filter

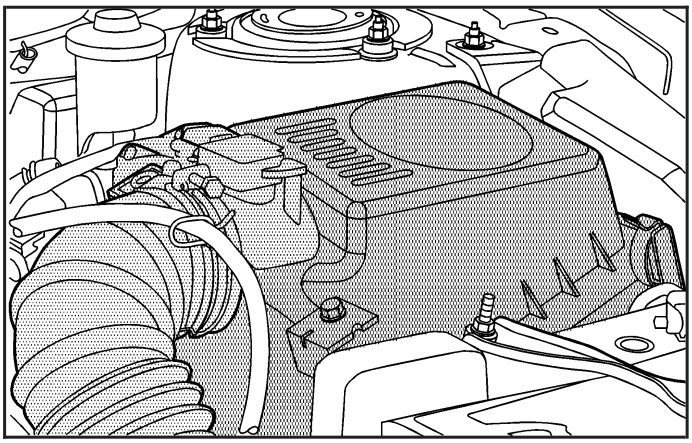

The engine air cleaner/filter is in the engine compartment on the driver's side of the vehicle. See *Engine Compartment Overview on page 5-12* for more information on location.

When to Inspect the Engine Air Cleaner/Filter

If you are driving in dusty/dirty conditions, inspect the air cleaner/filter at each engine oil change. Replace the filter every 30,000 miles (48 000 km) or 24 months, whichever occurs first. See *Part A: Scheduled Maintenance Services on page 6-4* for more information.

How to Inspect the Engine Air Cleaner/Filter

To inspect the air cleaner/filter remove the filter from the vehicle and lightly shake the filter to release loose dust and dirt. If the filter remains caked with dirt, a new filter is required.

Downloaded from www.Manualslib.com manuals search engine

To inspect or replace the engine air cleaner/filter, do the following:

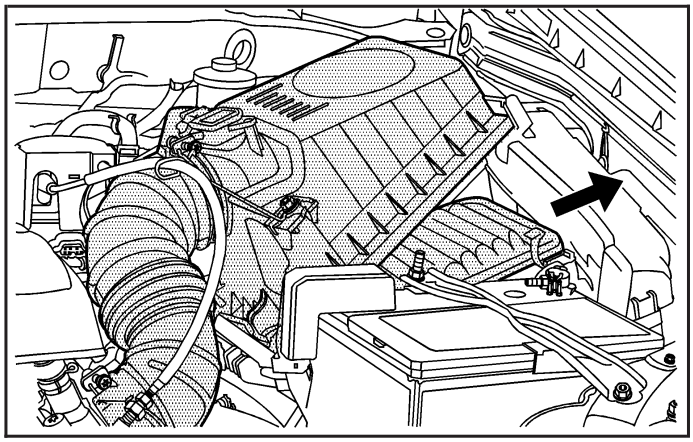

1. Release the two clips that hold the cover down.
2. Lift the cover off.
3. Inspect or replace the engine air cleaner/filter.
4. Reinstall the cover.

⚠ CAUTION:

Operating the engine with the air cleaner/filter off can cause you or others to be burned. The air cleaner not only cleans the air; it helps to stop flames if the engine backfires. If it is not there and the engine backfires, you could be burned. Do not drive with it off, and be careful working on the engine with the air cleaner/filter off.

Notice: **If the air cleaner/filter is off, a backfire can cause a damaging engine fire. And, dirt can easily get into your engine, which will damage it. Always have the air cleaner/filter in place when you are driving.**

Downloaded from www.Manualslib.com manuals search engine

Automatic Transmission Fluid

When to Check and Change Automatic Transmission Fluid

A good time to check your automatic transmission fluid level is when the engine oil is changed.

Check the fluid in the transmission and differential at the intervals listed in *Part A: Scheduled Maintenance Services on page 6-4*, and be sure to use the transmission fluid listed in *Part D: Recommended Fluids and Lubricants on page 6-19*.

How to Check Automatic Transmission Fluid

Because this operation can be a little difficult, you may choose to have this done at the dealer/retailer service department.

If you do it yourself, be sure to follow all the instructions here, or you could get a false reading on the dipstick.

Notice: **Use of the incorrect automatic transmission fluid may damage your vehicle, and the damages may not be covered by your warranty. Always use the automatic transmission fluid listed in *Part D: Recommended Fluids and Lubricants on page 6-19*.**

Wait at least 30 minutes before checking the transmission fluid level if you have been driving:

- When outside temperatures are above 90°F (32°C).
- At high speed for quite a while.
- In heavy traffic — especially in hot weather.
- While pulling a trailer.

To get the right reading, the fluid should be at normal operating temperature, which is 158°F to 176°F (70°C to 80°C).

Get the vehicle warmed up by driving about 15 miles (24 km) when outside temperatures are above 50°F (10°C). If it is colder than 50°F (10°C), you may have to drive longer.

Downloaded from www.Manualslib.com manuals search engine

Checking the Fluid Level

Prepare your vehicle as follows:

1. Park your vehicle on a level place. Keep the engine running.
2. With the parking brake applied, place the shift lever in PARK (P).
3. With your foot on the brake pedal, move the shift lever through each gear range, pausing for about three seconds in each range. Then, position the shift lever in PARK (P).
4. Let the engine run at idle for three to five minutes.

Then, without shutting off the engine, follow these steps:

The automatic transmission dipstick has an orange handle and is located near the front of the engine compartment. See *Engine Compartment Overview on page 5-12* for more information on location.

1. Release the tab and pull out the dipstick and wipe it with a clean rag or paper towel.
2. Push it back in all the way, wait three seconds and then pull it back out again.

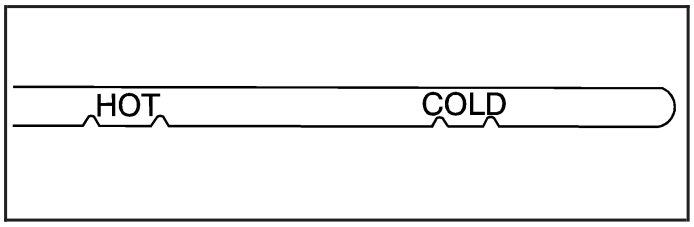

3. Check both sides of the dipstick, and read the lower level. The fluid level must be between the two dimples in the hot range.
4. If the fluid level is in the acceptable range, push the dipstick back in all the way; then press the tab down to lock the dipstick in place.

Downloaded from www.Manualslib.com manuals search engine

How to Add Automatic Transmission Fluid

Refer to the Maintenance Schedule to determine what kind of transmission fluid to use. See *Part D: Recommended Fluids and Lubricants on page 6-19*.

If the fluid level is low, add only enough of the proper fluid to bring the level into the area between dimples on the dipstick.

1. Pull out the dipstick.
2. Using a long-neck funnel, add enough fluid at the dipstick hole to bring it to the proper level.

   It does not take much fluid, generally less than one pint (0.5 L). Do not overfill.

Notice: **Too much or too little fluid can damage your transmission. Too much can mean that some of the fluid could come out and fall on hot engine parts or exhaust system parts, starting a fire. Too little fluid could cause the transmission to overheat. Be sure to get an accurate reading if you check your transmission fluid.**

3. After adding fluid, recheck the fluid level as described under “How to Check Automatic Transmission Fluid,” earlier in this section.
4. When the correct fluid level is obtained, push the dipstick back in all the way; then press the tab down to lock the dipstick in place.

Manual Transmission Fluid

When to Check

A good time to have your manual transaxle fluid level checked is when the engine oil is changed. However, the fluid in your manual transaxle does not require changing.

How to Check

Because this operation can be difficult, you may choose to have this done at your dealer/retailer service department.

Downloaded from www.Manualslib.com manuals search engine

If you do it yourself, be sure to follow all the instructions here, or you could get a false reading.

Notice: **Too much or too little fluid can damage the transaxle. Too much can mean that some of the fluid could come out and fall on hot engine or exhaust system parts, starting a fire. Too little fluid could cause the transaxle to overheat. Be sure to get an accurate reading if you check the transaxle fluid.**

Check the fluid level only when your engine is off, the vehicle is parked on a level place and the transaxle is cool enough for you to rest your fingers on the transaxle case.

Then, follow these steps:

1. Remove the filler plug.
2. Check that the lubricant level is up to the bottom of the filler plug hole.
3. If the fluid level is good, install the plug and be sure it is fully seated. If the fluid level is low, add more fluid as described in the next steps.

How to Add Fluid

Here is how to add fluid. Refer to the Maintenance Schedule to determine what kind of fluid to use. See *Part D: Recommended Fluids and Lubricants on page 6-19*.

1. Remove the filler plug.
2. Add fluid at the filler plug hole. Add only enough fluid to bring the fluid level up to the bottom of the filler plug hole.
3. Install the filler plug. Be sure the plug is fully seated.

Hydraulic Clutch

The hydraulic clutch linkage in your vehicle is self-adjusting. The master cylinder reservoir is filled with DOT-3 brake fluid.

It is not necessary to regularly check the fluid unless you suspect there is a leak in the system. Adding fluid will not correct a leak.

The hydraulic clutch and brake master cylinder use the same reservoir.

A fluid loss in this system could indicate a problem. Have the system inspected and repaired.

Downloaded from www.Manualslib.com manuals search engine

When to Check and What to Use

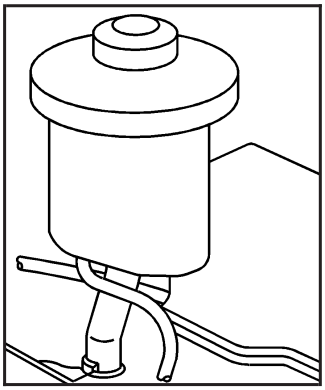

The reservoir is located at the back of the engine compartment, on the driver's side of the vehicle. See *Engine Compartment Overview on page 5-12* for more information on location.

Refer to the Maintenance Schedule to determine how often you should check the fluid level in your master cylinder reservoir and for the proper fluid. See *Part B: Owner Checks and Services on page 6-12* and *Part D: Recommended Fluids and Lubricants on page 6-19*.

How to Check and Add Fluid

Check to make sure that the fluid level is at or above the MIN mark. If the level is below the MIN mark, see the instructions on the reservoir cap.

Engine Coolant

Your vehicle was factory-filled with a coolant developed to last for five years or 150,000 miles (240 000 km), whichever occurs first. When coolant is added or changed, use DEX-COOL® coolant.

The following explains your cooling system and how to add coolant when it is low. If you have a problem with engine overheating, see *Engine Overheating on page 5-26*.

A 50/50 mixture of clean, drinkable water and DEX-COOL® coolant will:

- Give freezing protection down to –34°F (– 37°C).
- Give boiling protection up to 265°F (129°C).
- Protect against rust and corrosion.
- Help keep the proper engine temperature.
- Let the warning lights and gages work as they should.

Notice: **Using coolant other than DEX-COOL® may cause premature engine, heater core or radiator corrosion. In addition, the engine coolant may require changing sooner, at 30,000 miles (50 000 km) or 24 months, whichever occurs first. Any repairs would not be covered by your warranty. Always use DEX-COOL® (silicate-free) coolant in your vehicle.**

Downloaded from www.Manualslib.com manuals search engine

What to Use

Use a mixture of one-half clean, drinkable water and one-half DEX-COOL® coolant which will not damage aluminum parts. If you use this coolant mixture, you do not need to add anything else.

⚠ CAUTION:

Adding only plain water to your cooling system can be dangerous. Plain water, or some other liquid such as alcohol, can boil before the proper coolant mixture will. Your vehicle's coolant warning system is set for the proper coolant mixture. With plain water or the wrong mixture, your engine could get too hot but you would not get the overheat warning. Your engine could catch fire and you or others could be burned. Use a 50/50 mixture of clean, drinkable water and DEX-COOL® coolant.

Notice: **If you use an improper coolant mixture, your engine could overheat and be badly damaged. The repair cost would not be covered by your warranty. Too much water in the mixture can freeze and crack the engine, radiator, heater core, and other parts.**

If you have to add coolant more than four times a year, have your dealer/retailer check your cooling system.

Notice: **If you use extra inhibitors and/or additives in your vehicle's cooling system, you could damage your vehicle. Use only the proper mixture of the engine coolant listed in this manual for the cooling system. See *Part D: Recommended Fluids and Lubricants on page 6-19* for more information.**

Checking Coolant

The vehicle must be on a level surface. When your engine is cold, the coolant level should be at LOW, or a little higher. When your engine is warm, the level should be up to FULL, or a little higher.

See *Engine Compartment Overview on page 5-12* for the location of the coolant recovery tank.

Downloaded from www.Manualslib.com manuals search engine

Adding Coolant

If you need more coolant, add the proper DEX-COOL® coolant mixture at the coolant recovery tank, but be careful not to spill it.

⚠ CAUTION:

Turning the radiator pressure cap when the engine and radiator are hot can allow steam and scalding liquids to blow out and burn you badly. With the coolant recovery tank, you will almost never have to add coolant at the radiator. Never turn the radiator pressure cap — even a little — when the engine and radiator are hot.

⚠ CAUTION:

You can be burned if you spill coolant on hot engine parts. Coolant contains ethylene glycol, and it will burn if the engine parts are hot enough. Do not spill coolant on a hot engine.

Occasionally check the coolant level in the radiator. For information on how to add coolant to the radiator, see *Cooling System on page 5-28*.

Downloaded from www.Manualslib.com manuals search engine

Radiator Pressure Cap

Notice: **If the pressure cap is not tightly installed, coolant loss and possible engine damage may occur. Be sure the cap is properly and tightly secured.**

See *Engine Compartment Overview on page 5-12* for more information on location.

Engine Overheating

You will find a coolant temperature gage on your vehicle's instrument panel. See *Engine Coolant Temperature Gage on page 3-35*.

If Steam Is Coming From Your Engine

⚠ CAUTION:

Steam from an overheated engine can burn you badly, even if you just open the hood. Stay away from the engine if you see or hear steam coming from it. Just turn it off and get everyone away from the vehicle until it cools down. Wait until there is no sign of steam or coolant before you open the hood.

If you keep driving when your engine is overheated, the liquids in it can catch fire. You or others could be badly burned. Stop your engine if it overheats, and get out of the vehicle until the engine is cool.

Notice: **If your engine catches fire because you keep driving with no coolant, your vehicle can be badly damaged. The costly repairs would not be covered by your warranty.**

Downloaded from www.Manualslib.com manuals search engine

If No Steam Is Coming From Your Engine

If you get an engine overheat warning but see or hear no steam, the problem may not be too serious. Sometimes the engine can get a little too hot when you:

- Climb a long hill on a hot day.
- Stop after high-speed driving.
- Idle for long periods in traffic.
- Tow a trailer.

If you get the overheat warning with no sign of steam, try this for a minute or so:

1. In heavy traffic, let the engine idle in NEUTRAL (N) while stopped. If it is safe to do so, pull off the road, shift to PARK (P) or NEUTRAL (N) and let the engine idle.
2. Turn on your heater to full hot at the highest fan speed and open the windows as necessary.

If you no longer have the overheat warning, you can drive. Just to be safe, drive slower for about 10 minutes. If the warning does not come back on, you can drive normally.

If the warning continues and you have not stopped, pull over, stop, and park your vehicle right away.

If there is still no sign of steam, you can idle the engine for three minutes while you are parked. If you still have the warning, turn off the engine and get everyone out of the vehicle until it cools down.

You may decide not to lift the hood but to get service help right away.

Downloaded from www.Manualslib.com manuals search engine

Cooling System

When you decide it is safe to lift the hood, here is what you will see:

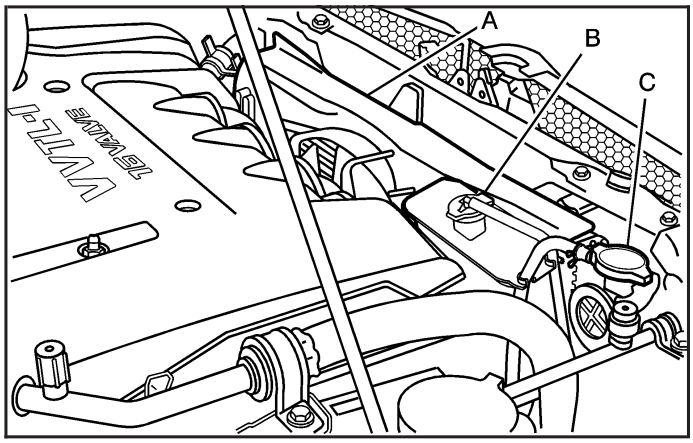

A. Electric Engine Cooling Fan
B. Engine Coolant Recovery Tank
C. Radiator Pressure Cap

⚠ CAUTION:

An electric engine cooling fan under the hood can start up even when the engine is not running and can injure you. Keep hands, clothing, and tools away from any underhood electric fan.

If the coolant inside the coolant recovery tank is boiling, do not do anything else until it cools down. The vehicle should be parked on a level surface.

The coolant level should be at or above the FULL mark. If it is not, you may have a leak at the pressure cap or in the radiator hoses, heater hoses, radiator, water pump, or somewhere else in the cooling system.

Downloaded from www.Manualslib.com manuals search engine

⚠ CAUTION:

Heater and radiator hoses, and other engine parts, can be very hot. Do not touch them. If you do, you can be burned.

Do not run the engine if there is a leak. If you run the engine, it could lose all coolant. That could cause an engine fire, and you could be burned. Get any leak fixed before you drive the vehicle.

If there seems to be no leak, with the engine on, check to see if the electric engine cooling fan is running. If the engine is overheating, the fan should be running. If it is not, your vehicle needs service.

Notice: **Engine damage from running the engine without coolant is not covered by the warranty.**

How to Add Coolant to the Coolant Recovery Tank

If you have not found a problem yet, but the coolant level is not at or above the FULL mark, add a 50/50 mixture of clean, drinkable water and DEX-COOL® coolant at the coolant recovery tank. See *Engine Coolant on page 5-23* for more information about the proper coolant mixture.

⚠ CAUTION:

Adding only plain water to your cooling system can be dangerous. Plain water, or some other liquid such as alcohol, can boil before the proper coolant mixture will. Your vehicle's coolant warning system is set for the proper coolant mixture. With plain water or the wrong mixture, your engine could get too hot but you would not get the overheat warning. Your engine could catch fire and you or others could be burned. Use a 50/50 mixture of clean, drinkable water and a proper coolant.

Notice: **In cold weather, water can freeze and crack the engine, radiator, heater core and other parts. Use the recommended coolant and the proper coolant mixture.**

Downloaded from www.Manualslib.com manuals search engine

⚠ CAUTION:

You can be burned if you spill coolant on hot engine parts. Coolant contains ethylene glycol and it will burn if the engine parts are hot enough. Do not spill coolant on a hot engine.

When the coolant in the coolant recovery tank is at the FULL mark, start your vehicle.

If the overheat warning continues, there is one more thing you can try. You can add the proper coolant mixture directly to the radiator but be sure the cooling system is cool before you do it.

⚠ CAUTION:

Steam and scalding liquids from a hot cooling system can blow out and burn you badly. They are under pressure, and if you turn the radiator pressure cap — even a little — they can come out at high speed. Never turn the cap when the cooling system, including the radiator pressure cap, is hot. Wait for the cooling system and radiator pressure cap to cool if you ever have to turn the pressure cap.

Downloaded from www.Manualslib.com manuals search engine

How to Add Coolant to the Radiator

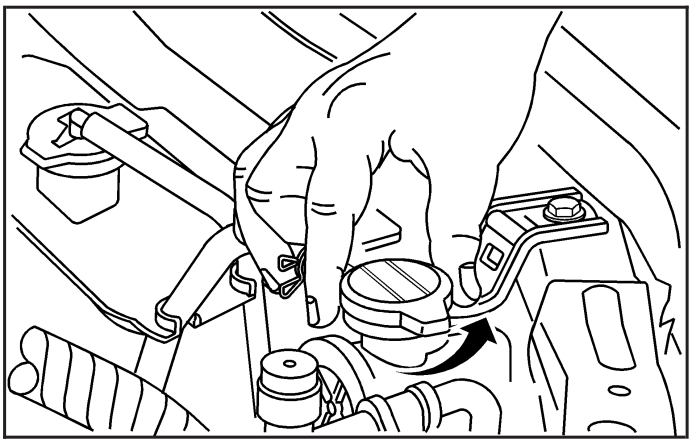

1. You can remove the radiator pressure cap when the cooling system, including the radiator pressure cap and upper radiator hose, is no longer hot. Turn the pressure cap slowly counterclockwise until it first stops. Do not press down while turning the pressure cap.

   If you hear a hiss, wait for that to stop. A hiss means there is still some pressure left.

2. Then keep turning the pressure cap, but now push down as you turn it. Remove the pressure cap.

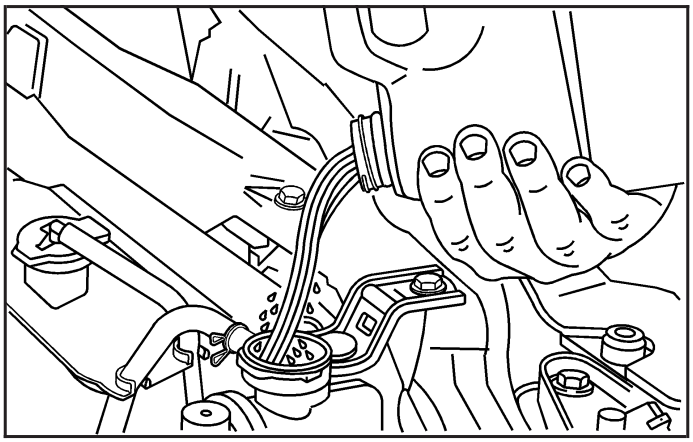

3. Fill the radiator with the proper coolant mixture, up to the base of the filler neck. See *Engine Coolant on page 5-23* for more information about the proper coolant mixture.

Downloaded from www.Manualslib.com manuals search engine

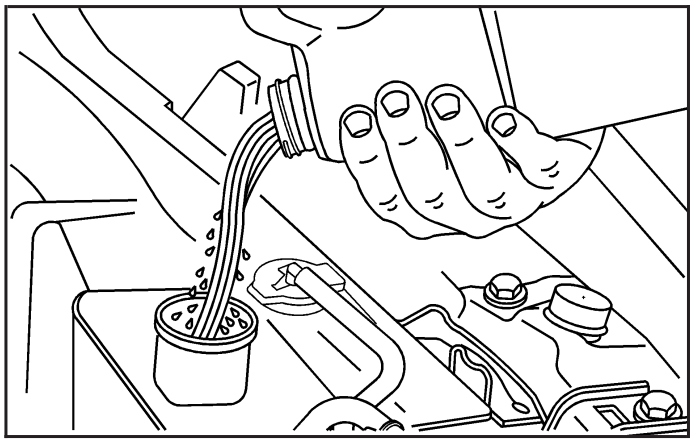

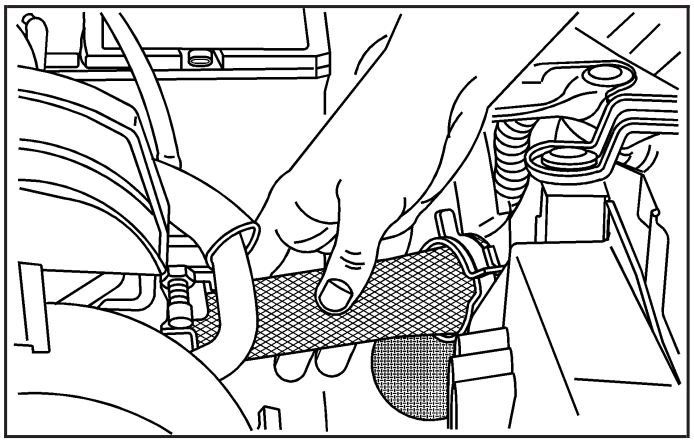

4. Then fill the coolant recovery tank to the FULL mark.
5. Put the cap back on the coolant recovery tank, but leave the radiator pressure cap off.
6. Start the engine and let it run until you can feel the upper radiator hose getting hot. Watch out for the engine cooling fan.
7. By this time, the coolant level inside the radiator filler neck may be lower. If the level is lower, add more of the proper coolant mixture through the filler neck until the level reaches the base of the filler neck.
8. Then replace the pressure cap. At any time during this procedure if coolant begins to flow out of the filler neck, reinstall the pressure cap. Be sure the ears on the pressure cap are in line with the vent tube.

Downloaded from www.Manualslib.com manuals search engine

Power Steering Fluid

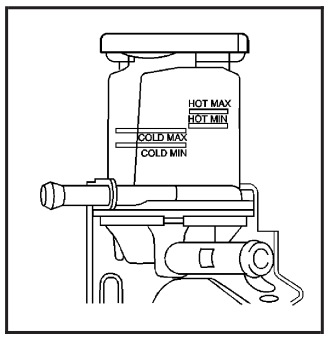

The power steering fluid reservoir is located in the engine compartment on the passenger's side of the vehicle. See *Engine Compartment Overview on page 5-12* for reservoir location.

When to Check Power Steering Fluid

It is not necessary to regularly check power steering fluid unless you suspect there is a leak in the system or you hear an unusual noise. A fluid loss in this system could indicate a problem. Have the system inspected and repaired.

How to Check Power Steering Fluid

You can check your fluid without taking the cap off. Just look at the reservoir.

- When the engine compartment is hot, the level should be between the HOT marks.
- When the engine compartment is cool, the level should be between the COLD marks.

What to Use

To determine what kind of fluid to use, see *Part D: Recommended Fluids and Lubricants on page 6-19*.

Notice: **When adding power steering fluid or making a complete fluid change, always use the proper fluid. Failure to use the proper fluid can cause leaks and damage hoses and seals.**

Downloaded from www.Manualslib.com manuals search engine

Windshield Washer Fluid

What to Use

When you need windshield washer fluid, be sure to read the manufacturer's instructions before use. If you will be operating your vehicle in an area where the temperature may fall below freezing, use a fluid that has sufficient protection against freezing.

Adding Washer Fluid

If your vehicle has the low windshield washer fluid level warning light, it will come on when the fluid level is too low. See *Low Washer Fluid Warning Light on page 3-40*.

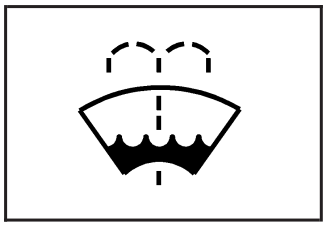

Open the cap with the washer symbol on it. Add washer fluid until the tank is full. See *Engine Compartment Overview on page 5-12* for reservoir location.

Notice:

- **When using concentrated washer fluid, follow the manufacturer's instructions for adding water.**
- **Do not mix water with ready-to-use washer fluid. Water can cause the solution to freeze and damage your washer fluid tank and other parts of the washer system. Also, water does not clean as well as washer fluid.**
- **Fill the washer fluid tank only three-quarters full when it is very cold. This allows for fluid expansion if freezing occurs, which could damage the tank if it is completely full.**
- **Do not use engine coolant (antifreeze) in your windshield washer. It can damage the vehicle's windshield washer system and paint.**

Downloaded from www.Manualslib.com manuals search engine

Brakes

Brake Fluid

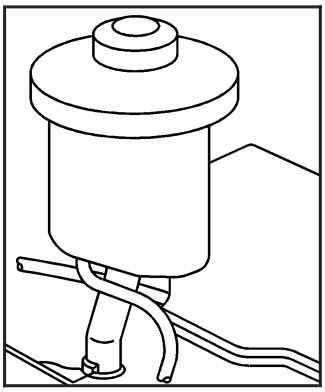

The hydraulic clutch and brake master cylinder use the same reservoir. It is filled with DOT-3 brake fluid. See *Engine Compartment Overview on page 5-12* for the location of the reservoir.

There are only two reasons why the brake fluid level in the reservoir might go down. The first is that the brake fluid goes down to an acceptable level during normal brake lining wear. When new linings are put in, the fluid level goes back up. The other reason is that fluid is leaking out of the brake hydraulic system or the hydraulic clutch system. If it is, have that system fixed immediately, since a leak means that the brakes will not work well.

It is not a good idea to top off the brake fluid. Adding brake fluid will not correct a leak. If fluid is added when the linings are worn, there will be too much fluid when new brake linings are installed. Add or remove brake fluid, as necessary, only when work is done on the brake hydraulic system.

⚠ CAUTION:

If your vehicle has too much brake fluid, it can spill on the engine. The fluid will burn if the engine is hot enough. You or others could be burned, and your vehicle could be damaged. Add brake fluid only when work is done on the brake and/or clutch hydraulic system.

When the brake fluid falls to a low level, the brake warning light will come on. See *Brake System Warning Light on page 3-32*.

Downloaded from www.Manualslib.com manuals search engine

What to Add

When you do need brake fluid, use only DOT-3 brake fluid. Use new brake fluid from a sealed container only. See *Part D: Recommended Fluids and Lubricants on page 6-19*.

Always clean the brake fluid reservoir cap and the area around the cap before removing it. This helps keep dirt from entering the reservoir.

⚠ CAUTION:

With the wrong kind of fluid in the brake hydraulic system, the brakes might not work well. This could cause a crash. Always use the proper brake fluid.

Notice:

- **Using the wrong fluid can badly damage brake hydraulic system parts. For example, just a few drops of mineral-based oil, such as engine oil, in the brake hydraulic system can damage brake hydraulic system parts so badly that they will have to be replaced. Do not let someone put in the wrong kind of fluid.**
- **If you spill brake fluid on your vehicle's painted surfaces, the paint finish can be damaged. Be careful not to spill brake fluid on your vehicle. If you do, wash it off immediately. See *Washing Your Vehicle on page 5-85*.**

Brake Wear

Your vehicle has front disc brakes and rear drum brakes.

Disc brake pads have built-in wear indicators that make a high-pitched warning sound when the brake pads are worn and new pads are needed. The sound can come and go or be heard all the time your vehicle is moving, except when you are pushing on the brake pedal firmly.

⚠ CAUTION:

The brake wear warning sound means that soon the brakes will not work well. That could lead to an accident. When you hear the brake wear warning sound, have your vehicle serviced.

Notice: **Continuing to drive with worn-out brake pads could result in costly brake repair.**

Downloaded from www.Manualslib.com manuals search engine

Some driving conditions or climates can cause a brake squeal when the brakes are first applied or lightly applied. This does not mean something is wrong with the brakes.

Properly torqued wheel nuts are necessary to help prevent brake pulsation. When tires are rotated, inspect brake pads for wear and evenly tighten wheel nuts in the proper sequence to torque specifications in *Capacities and Specifications on page 5-95*.

Rear drum brakes do not have wear indicators, but if you ever hear a rear brake rubbing noise, have the rear brake linings inspected immediately. Also, the rear brake drums should be removed and inspected each time the tires are removed for rotation or changing. When you have the front brake pads replaced, have the rear brakes inspected, too.

Brake linings should always be replaced as complete axle sets.

See *Brake System Inspection on page 6-18*.

Brake Pedal Travel

See your dealer/retailer if the brake pedal does not return to normal height, or if there is a rapid increase in pedal travel. This could be a sign that brake service might be required.

Brake Adjustment

Every time you make a moderate brake stop, the disc brakes adjust for wear. If you rarely make a moderate or heavier stop, the brakes might not adjust correctly. If you drive in that way, then — very carefully — make a few moderate brake stops about every 1,000 miles (1 600 km), so the brakes will adjust properly.

Replacing Brake System Parts

The braking system on a vehicle is complex. Its many parts have to be of top quality and work well together if the vehicle is to have really good braking. Your vehicle was designed and tested with top-quality brake parts. When you replace parts of the braking system — for example, when the brake linings wear down and you need new ones put in — be sure you get new approved replacement parts. If you do not, the brakes might not work properly. For example, if someone puts in brake linings that are wrong for your vehicle, the balance between the front and rear brakes can change — for the worse. The braking performance you have come to expect can change in many other ways if someone puts in the wrong replacement brake parts.

Downloaded from www.Manualslib.com manuals search engine

Battery

Your vehicle has a maintenance free battery. When it is time for a new battery, see your dealer/retailer for one that has the replacement number shown on the original battery's label. See *Engine Compartment Overview on page 5-12* for battery location.

Warning: Battery posts, terminals, and related accessories contain lead and lead compounds, chemicals known to the State of California to cause cancer and reproductive harm. Wash hands after handling.

Vehicle Storage

⚠ CAUTION:

Batteries have acid that can burn you and gas that can explode. You can be badly hurt if you are not careful. See *Jump Starting on page 5-38* for tips on working around a battery without getting hurt.

Infrequent Usage: If you drive your vehicle infrequently, remove the black, negative (–) cable from the battery. This will help keep the battery from running down.

Extended Storage: For extended storage of your vehicle, remove the black, negative (–) cable from the battery or use a battery trickle charger. This will help maintain the charge of the battery over an extended period of time.

Jump Starting

If your vehicle's battery has run down, you may want to use another vehicle and some jumper cables to start your vehicle. Be sure to use the following steps to do it safely.

⚠ CAUTION:

Batteries can hurt you. They can be dangerous because:

- **They contain acid that can burn you.**
- **They contain gas that can explode or ignite.**
- **They contain enough electricity to burn you.**

If you do not follow these steps exactly, some or all of these things can hurt you.

Downloaded from www.Manualslib.com manuals search engine

Notice: **Ignoring these steps could result in costly damage to your vehicle that would not be covered by your warranty.**

Trying to start your vehicle by pushing or pulling it will not work, and it could damage your vehicle.

1. Check the other vehicle. It must have a 12-volt battery with a negative ground system.

Notice: **If the other vehicle's system is not a 12-volt system with a negative ground, both vehicles can be damaged. Only use vehicles with 12-volt systems with negative grounds to jump start your vehicle.**

2. Get the vehicles close enough so the jumper cables can reach, but be sure the vehicles are not touching each other. If they are, it could cause a ground connection you do not want. You would not be able to start your vehicle, and the bad grounding could damage the electrical systems.

   To avoid the possibility of the vehicles rolling, set the parking brake firmly on both vehicles involved in the jump start procedure. Put an automatic transaxle in PARK (P) or a manual transaxle in NEUTRAL before setting the parking brake.

Notice: **If you leave your radio or other accessories on during the jump starting procedure, they could be damaged. The repairs would not be covered by your warranty. Always turn off your radio and other accessories when jump starting your vehicle.**

3. Turn off the ignition on both vehicles. Unplug unnecessary accessories plugged into the cigarette lighter. Turn off the radio and all lamps that are not needed. This will avoid sparks and help save both batteries. And it could save the radio!
4. Open the hoods and locate the batteries. Find the positive (+) and negative (–) terminal locations on each vehicle. See *Engine Compartment Overview on page 5-12* for more information on location.

⚠ CAUTION:

An electric fan can start up even when the engine is not running and can injure you. Keep hands, clothing and tools away from any underhood electric fan.

Downloaded from www.Manualslib.com manuals search engine

⚠ CAUTION:

Using a match near a battery can cause battery gas to explode. People have been hurt doing this, and some have been blinded. Use a flashlight if you need more light.

Be sure the battery has enough water. You do not need to add water to the battery installed in your new vehicle. But if a battery has filler caps, be sure the right amount of fluid is there. If it is low, add water to take care of that first. If you don't, explosive gas could be present.

Battery fluid contains acid that can burn you. Do not get it on you. If you accidentally get it in your eyes or on your skin, flush the place with water and get medical help immediately.

⚠ CAUTION:

Fans or other moving engine parts can injure you badly. Keep your hands away from moving parts once the engine is running.

5. Check that the jumper cables do not have loose or missing insulation. If they do, you could get a shock. The vehicles could be damaged too.

   Before you connect the cables, here are some basic things you should know. Positive (+) will go to positive (+) or to a remote positive (+) terminal if the vehicle has one. Negative (–) will go to a heavy, unpainted metal engine part or to a remote negative (–) terminal if the vehicle has one.

   Do not connect positive (+) to negative (–) or you will get a short that would damage the battery and maybe other parts too. And do not connect the negative (–) cable to the negative (–) terminal on the dead battery because this can cause sparks.

Downloaded from www.Manualslib.com manuals search engine

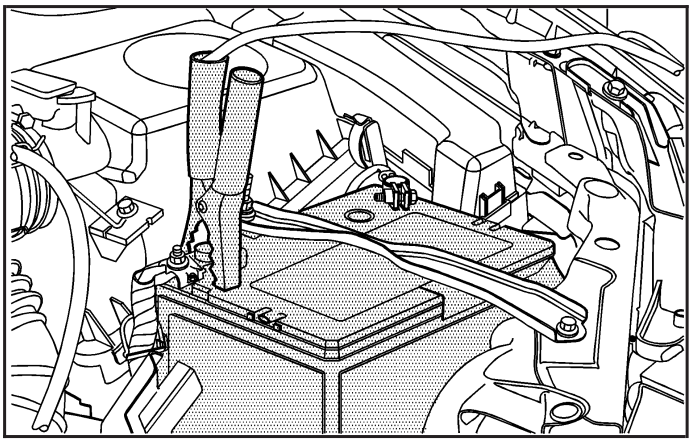

6. Connect the red positive (+) cable to the positive (+) terminal of the dead battery. Use a remote positive (+) terminal if the vehicle has one.
7. Do not let the other end touch metal. Connect it to the positive (+) terminal of the good battery. Use a remote positive (+) terminal if the vehicle has one.
8. Now connect the black negative (–) cable to the negative terminal of the good battery. Use a remote negative (–) terminal if the vehicle has one.

   Do not let the other end touch anything until the next step. The other end of the negative (–) cable does not go to the dead battery. It goes to a heavy, unpainted metal engine part or to a remote negative (–) terminal on the vehicle with the dead battery.
9. Connect the other end of the negative (–) cable at least 18 inches (45 cm) away from the dead battery, but not near engine parts that move. The electrical connection is just as good there, and the chance of sparks getting back to the battery is much less.
10. Now start the vehicle with the good battery and run the engine for a while.
11. Try to start the vehicle that had the dead battery. If it will not start after a few tries, it probably needs service.

Downloaded from www.Manualslib.com manuals search engine

Notice: **If the jumper cables are connected or removed in the wrong order, electrical shorting may occur and damage the vehicle. The repairs would not be covered by your warranty. Always connect and remove the jumper cables in the correct order, making sure that the cables do not touch each other or other metal.**

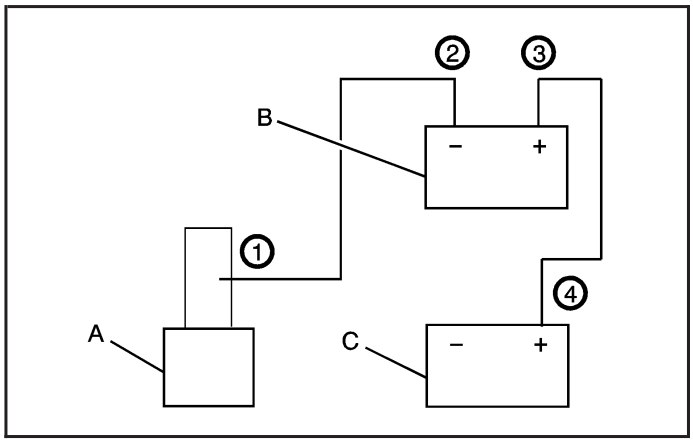

Jumper Cable Removal

A. Heavy, Unpainted Metal Engine Part
B. Good Battery
C. Dead Battery

To disconnect the jumper cables from both vehicles, do the following:

1. Disconnect the black negative (–) cable from the vehicle that had the dead battery.
2. Disconnect the black negative (–) cable from the vehicle with the good battery.
3. Disconnect the red positive (+) cable from the vehicle with the good battery.
4. Disconnect the red positive (+) cable from the other vehicle.

Headlamp Aiming

Headlamp aim has been preset at the factory and should need no further adjustment.

However, if your vehicle is damaged in a crash, the headlamp aim may be affected. Aim adjustment to the low-beam headlamps may be necessary if oncoming drivers flash their high-beam headlamps at you (for vertical aim).

If the headlamps need to be re-aimed, it is recommended that you take the vehicle to your dealer/retailer for service.

Downloaded from www.Manualslib.com manuals search engine

Bulb Replacement

For the proper type of replacement bulbs, see *Replacement Bulbs on page 5-48*.

For any bulb changing procedure not listed in this section, contact your dealer/retailer.

Halogen Bulbs

⚠ CAUTION:

Halogen bulbs have pressurized gas inside and can burst if you drop or scratch the bulb. You or others could be injured. Be sure to read and follow the instructions on the bulb package.

Headlamps, Front Turn Signal, and Parking Lamps

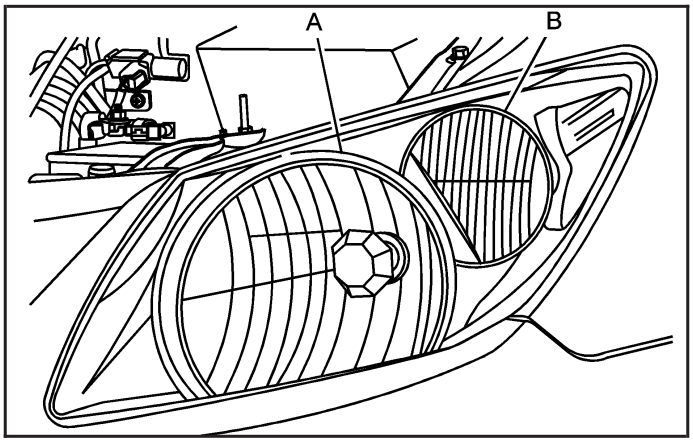

A. Headlamp

B. Turn Signal/Parking Lamp

Downloaded from www.Manualslib.com manuals search engine

To replace the headlamp, turn signal, or parking lamp bulb:

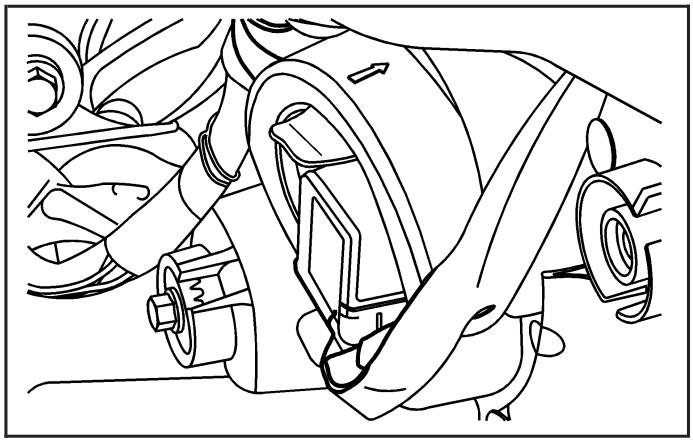

1. Open the hood and locate the lamp assembly.
2. Remove the rubber cover and socket from the headlamp or turn signal/parking lamp.

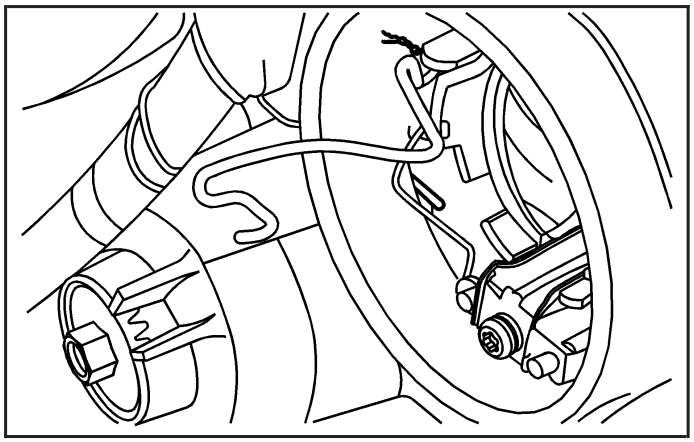

3. Release the retainer clip holding the bulb on the headlamp by pressing down and moving the metal retainer away from you.

   Turn the turn signal/parking lamp bulb socket counterclockwise to remove.
4. Pull the bulb out of the fixture.
5. Reverse the steps to install a new bulb.

Downloaded from www.Manualslib.com manuals search engine

Center High-Mounted Stoplamp (CHMSL)

To replace the center high-mounted stoplamp bulb:

1. Locate the bulb which is on the inside of the liftgate/liftglass near the top.
2. Remove the two clips on both sides of the cover and remove it.

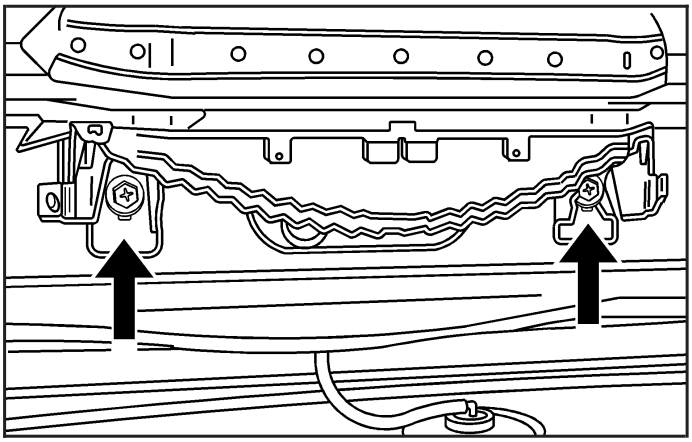

3. Remove the two screws from the CHMSL housing. Then remove the housing to expose the bulb.

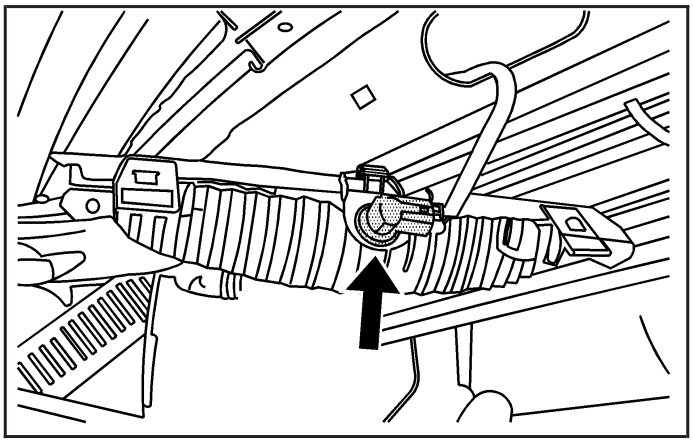

4. Turn the bulb socket counterclockwise and pull it out of the lamp housing.
5. Pull the bulb straight out of the socket.
6. Reverse the previous steps to install a new bulb.

Downloaded from www.Manualslib.com manuals search engine

Taillamps, Turn Signal, and Stoplamps

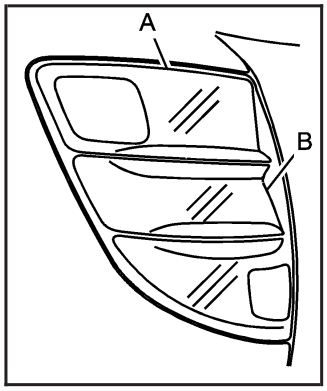

A. Stoplamp/Taillamp
B. Turn Signal Lamp

To replace the turn signal and/or stop/taillamp bulbs:

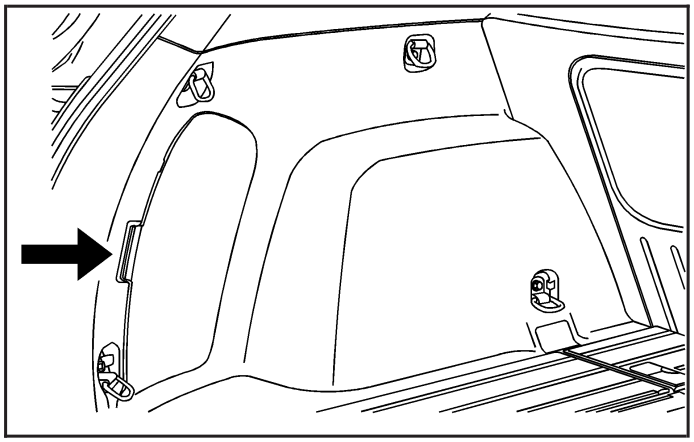

1. Remove the storage compartment cover in the rear cargo area of the vehicle to access the bulbs.

Downloaded from www.Manualslib.com manuals search engine

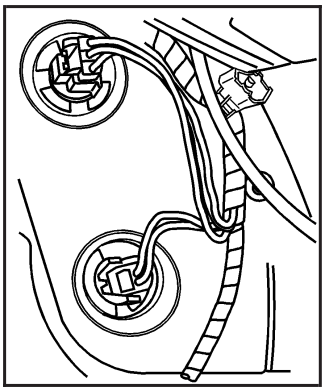

2. Turn the bulb socket counterclockwise and pull it out of the lamp housing.

3. Pull the bulb straight out of the socket.
4. Reverse the previous steps to install a new bulb.
5. Reinstall the cover.

Back-Up Lamps

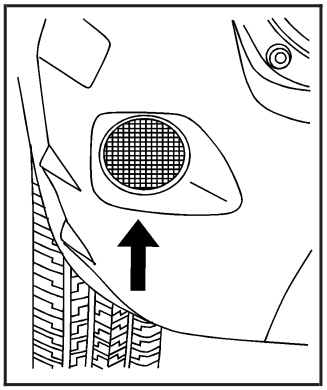

The back-up lamp bulb is located in the bumper.

To replace the back-up lamp bulb:

1. Reach up under the rear fascia to locate the back-up lamp housing.
2. Turn the bulb socket counterclockwise and pull it out of the lamp housing.
3. Pull the bulb straight out of the socket.
4. Reverse the previous steps to install a new bulb.

Downloaded from www.Manualslib.com manuals search engine

Replacement Bulbs

Exterior Lamp	Bulb Number
Back-Up Lamp	7440
CHMSL	921
Front Turn Signal and Parking Lamp	1157NA
Headlamp High/Low-Beam	9003
Rear Turn Signal	7440
Stoplamp/Taillamp	7443

For replacement bulbs not listed here, contact your dealer.

Windshield Wiper Blade Replacement

Windshield wiper blades should be inspected at least twice a year for wear or cracking. See “Wiper Blade Check” under *At Least Twice a Year on page 6-13* for more information.

Replacement blades come in different types and are removed in different ways. Here’s how to remove the wiper blade:

1. Pull the windshield wiper arm away from the windshield.

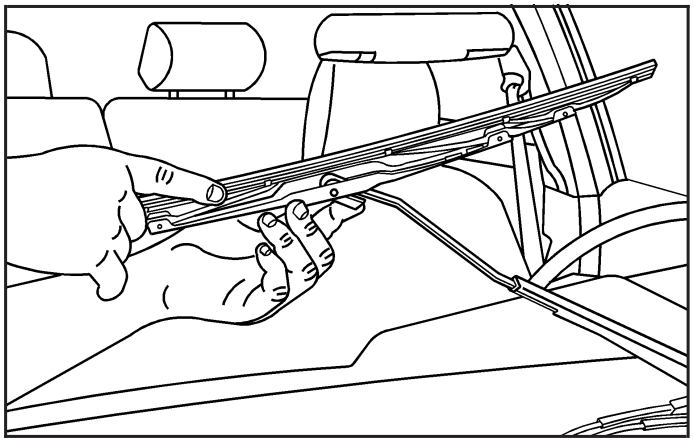

2. Push the release lever and slide the wiper assembly toward the driver’s side of the vehicle.
3. Install a new blade by reversing Steps 1 and 2.

Downloaded from www.Manualslib.com manuals search engine

Tires

Your new vehicle comes with high-quality tires made by a leading tire manufacturer. If you ever have questions about your tire warranty and where to obtain service, see your vehicle Warranty booklet for details.

⚠ CAUTION:

Poorly maintained and improperly used tires are dangerous.

- **Overloading your vehicle's tires can cause overheating as a result of too much flexing. You could have an air-out and a serious accident. See *Loading Your Vehicle on page 4-19*.**
- **Underinflated tires pose the same danger as overloaded tires. The resulting accident could cause serious injury. Check all tires frequently to maintain the recommended pressure.**

CAUTION: (Continued)

CAUTION: (Continued)

Tire pressure should be checked when your vehicle's tires are cold. See *Inflation - Tire Pressure on page 5-55*.

- **Overinflated tires are more likely to be cut, punctured, or broken by a sudden impact — such as when you hit a pothole. Keep tires at the recommended pressure.**
- **Worn, old tires can cause accidents. If the tire's tread is badly worn, or if your vehicle's tires have been damaged, replace them.**

Downloaded from www.Manualslib.com manuals search engine

Tire Sidewall Labeling

Useful information about a tire is molded into its sidewall. The examples below show a typical passenger car tire and a compact spare tire sidewall.

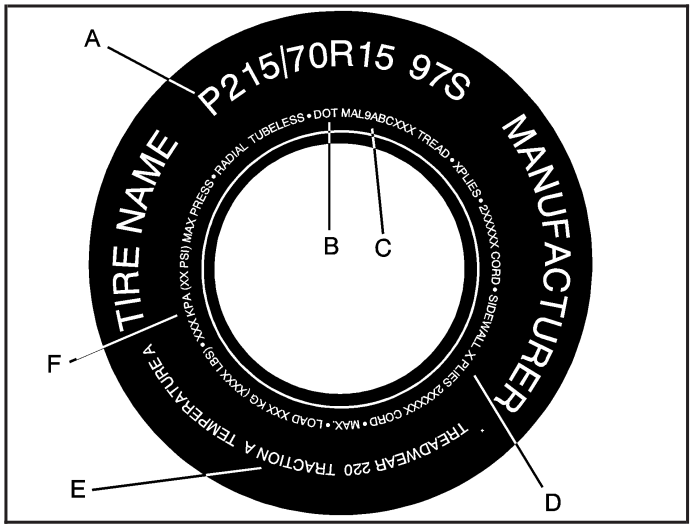

Passenger Car Tire Example

(A) Tire Size: The tire size is a combination of letters and numbers used to define a particular tire's width, height, aspect ratio, construction type and service description. See the "Tire Size" illustration later in this section for more detail.

(B) DOT (Department of Transportation): The Department of Transportation (DOT) code indicates that the tire is in compliance with the U.S. Department of Transportation Motor Vehicle Safety Standards.

(C) Tire Identification Number (TIN): The letters and numbers following DOT code are the Tire Identification Number (TIN). The TIN shows the manufacturer and plant code, tire size, and date the tire was manufactured. The TIN is molded onto both sides of the tire, although only one side may have the date of manufacture.

(D) Tire Ply Material: The type of cord and number of plies in the sidewall and under the tread.

(E) Uniform Tire Quality Grading (UTQG): Tire manufacturers are required to grade tires based on three performance factors: treadwear, traction and temperature resistance. For more information see *Uniform Tire Quality Grading on page 5-65*.

(F) Maximum Cold Inflation Load Limit: Maximum load that can be carried and the maximum pressure needed to support that load. For information on recommended tire pressure see *Inflation - Tire Pressure on page 5-55* and *Loading Your Vehicle on page 4-19*.

Downloaded from www.Manualslib.com manuals search engine

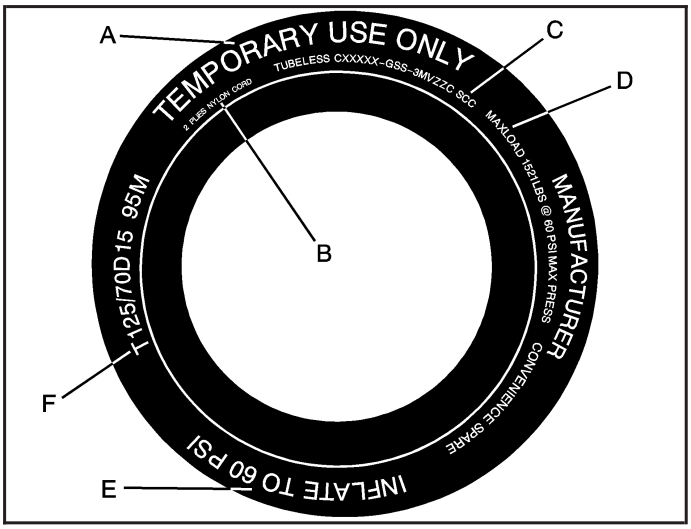

Compact Spare Tire Example

(A) Temporary Use Only: The compact spare tire or temporary use tire has a tread life of approximately 3,000 miles (5 000 km) and should not be driven at speeds over 65 mph (105 km/h). The compact spare tire is for emergency use when a regular road tire has lost air and gone flat. See *Compact Spare Tire on page 5-81* and *If a Tire Goes Flat on page 5-69*.

(B) Tire Ply Material: The type of cord and number of plies in the sidewall and under the tread.

(C) Tire Identification Number (TIN): The Tire Identification Number (TIN). The TIN shows the manufacturer and plant code, tire size, and date the tire was manufactured. The TIN is molded onto both sides of the tire, although only one side may have the date of manufacture.

(D) Maximum Cold Inflation Load Limit: Maximum load that can be carried and the maximum pressure needed to support that load. See *Compact Spare Tire on page 5-81* and *Loading Your Vehicle on page 4-19*.

(E) Tire Inflation: The temporary use tire or compact spare tire should be inflated to 60 psi (420 kPa). For more information on tire pressure and inflation see *Inflation - Tire Pressure on page 5-55*.

(F) Tire Size : A combination of letters and numbers define a tire's width, height, aspect ratio, construction type and service description. The letter T as the first character in the tire size means the tire is for temporary use only.

Downloaded from www.Manualslib.com manuals search engine

Tire Size

The following illustration shows an example of a typical passenger car tire size.

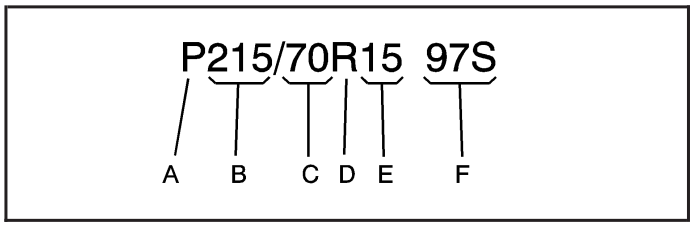

(A) Passenger (P-Metric) Tire: The United States version of a metric tire sizing system. The letter P as the first character in the tire size means a passenger vehicle tire engineered to standards set by the U. S. Tire and Rim Association.

(B) Tire Width: The three-digit number indicates the tire section width in millimeters from sidewall to sidewall.

(C) Aspect Ratio: A two-digit number that indicates the tire height-to-width measurements. For example, if the tire size aspect ratio is 70, as shown in item C of the illustration, it would mean that the tire's sidewall is 70% as high as it is wide.

(D) Construction Code: A letter code is used to indicate the type of ply construction in the tire. The letter R means radial ply construction; the letter D means diagonal or bias ply construction; and the letter B means belted-bias ply construction.

(E) Rim Diameter: Diameter of the wheel in inches.

(F) Service Description: These characters represent the load range and the speed rating of a tire. The load range represents the load carry capacity a tire is certified to carry. The speed rating is the maximum speed a tire is certified to carry a load. Speed ratings range from A to Z.

Tire Terminology and Definitions

Air Pressure: The amount of air inside the tire pressing outward on each square inch of the tire. Air pressure is expressed in pounds per square inch (psi) or kilopascal (kPa).

Accessory Weight: This means the combined weight of optional accessories. Some examples of optional accessories are, automatic transmission, power steering, power brakes, power windows, power seats, and air conditioning.

Downloaded from www.Manualslib.com manuals search engine

Aspect Ratio: The relationship of a tire's height to its width.

Belt: A rubber coated layer of cords that is located between the plies and the tread. Cords may be made from steel or other reinforcing materials.

Bead: The tire bead contains steel wires wrapped by steel cords that hold the tire onto the rim.

Bias Ply Tire: A pneumatic tire in which the plies are laid at alternate angles less than 90 degrees to the centerline of the tread.

Cold Tire Pressure: The amount of air pressure in a tire, measured in pounds per square inch (psi) or kilopascals (kPa) before a tire has built up heat from driving. See *Inflation - Tire Pressure on page 5-55*.

Curb Weight: The weight of a motor vehicle with standard and optional equipment including the maximum capacity of fuel, oil, and coolant, but without passengers and cargo.

DOT Markings: A code molded into the sidewall of a tire signifying that the tire is in compliance with the U.S. Department of Transportation (DOT) motor vehicle safety standards. The DOT code includes the Tire Identification Number (TIN), an alphanumeric designator which can also identify the tire manufacturer, production plant, brand, and date of production.

GVWR: Gross Vehicle Weight Rating. See *Loading Your Vehicle on page 4-19*.

GAWR FRT: Gross Axle Weight Rating for the front axle. See *Loading Your Vehicle on page 4-19*.

GAWR RR: Gross Axle Weight Rating for the rear axle. See *Loading Your Vehicle on page 4-19*.

Intended Outboard Sidewall: The side of an asymmetrical tire, that must always face outward when mounted on a vehicle.

Kilopascal (kPa): The metric unit for air pressure.

Light Truck (LT-Metric) Tire: A tire used on light duty trucks and some multipurpose passenger vehicles.

Load Index: An assigned number ranging from 1 to 279 that corresponds to the load carrying capacity of a tire.

Maximum Inflation Pressure: The maximum air pressure to which a cold tire can be inflated. The maximum air pressure is molded onto the sidewall.

Downloaded from www.Manualslib.com manuals search engine

Maximum Load Rating: The load rating for a tire at the maximum permissible inflation pressure for that tire.

Maximum Loaded Vehicle Weight: The sum of curb weight, accessory weight, vehicle capacity weight, and production options weight.

Normal Occupant Weight: The number of occupants a vehicle is designed to seat multiplied by 150 lbs (68 kg). See *Loading Your Vehicle on page 4-19*.

Occupant Distribution: Designated seating positions.

Outward Facing Sidewall: The side of an asymmetrical tire that has a particular side that faces outward when mounted on a vehicle. The side of the tire that contains a whitewall, bears white lettering, or bears manufacturer, brand, and/or model name molding that is higher or deeper than the same moldings on the other sidewall of the tire.

Passenger (P-Metric) Tire: A tire used on passenger cars and some light duty trucks and multipurpose vehicles.

Recommended Inflation Pressure: Vehicle manufacturer's recommended tire inflation pressure as shown on the tire placard. See *Inflation - Tire Pressure on page 5-55* and *Loading Your Vehicle on page 4-19*.

Radial Ply Tire: A pneumatic tire in which the ply cords that extend to the beads are laid at 90 degrees to the centerline of the tread.

Rim: A metal support for a tire and upon which the tire beads are seated.

Sidewall: The portion of a tire between the tread and the bead.

Speed Rating: An alphanumeric code assigned to a tire indicating the maximum speed at which a tire can operate.

Traction: The friction between the tire and the road surface. The amount of grip provided.

Tread: The portion of a tire that comes into contact with the road.

Treadwear Indicators: Narrow bands, sometimes called wear bars, that show across the tread of a tire when only 1/16 inch (1.6 mm) of tread remains. See *When It Is Time for New Tires on page 5-63*.

Downloaded from www.Manualslib.com manuals search engine

UTQGS (Uniform Tire Quality Grading Standards): A tire information system that provides consumers with ratings for a tire's traction, temperature, and treadwear. Ratings are determined by tire manufacturers using government testing procedures. The ratings are molded into the sidewall of the tire. See *Uniform Tire Quality Grading on page 5-65*.

Vehicle Capacity Weight: The number of designated seating positions multiplied by 150 lbs (68 kg) plus the rated cargo load. See *Loading Your Vehicle on page 4-19*.

Vehicle Maximum Load on the Tire: Load on an individual tire due to curb weight, accessory weight, occupant weight, and cargo weight.

Vehicle Placard: A label permanently attached to a vehicle showing the vehicle's capacity weight and the original equipment tire size and recommended inflation pressure. See "Tire and Loading Information Label" under *Loading Your Vehicle on page 4-19*.

Inflation - Tire Pressure

Tires need the correct amount of air pressure to operate effectively.

Notice: **Do not let anyone tell you that under-inflation or over-inflation is all right. It is not. If your tires do not have enough air (under-inflation), you can get the following:**

- **Too much flexing**
- **Too much heat**
- **Tire overloading**
- **Premature or irregular wear**
- **Poor handling**
- **Reduced fuel economy**

If your tires have too much air (over-inflation), you can get the following:

- **Unusual wear**
- **Poor handling**
- **Rough ride**
- **Needless damage from road hazards**

Downloaded from www.Manualslib.com manuals search engine

A vehicle specific Tire and Loading Information label is attached to your vehicle. This label shows your vehicle's original equipment tires and the correct inflation pressures for your tires when they are cold. The recommended cold tire inflation pressure, shown on the label, is the minimum amount of air pressure needed to support your vehicle's maximum load carrying capacity.

For additional information regarding how much weight your vehicle can carry, and an example of the Tire and Loading Information label, see *Loading Your Vehicle on page 4-19*. How you load your vehicle affects vehicle handling and ride comfort. Never load your vehicle with more weight than it was designed to carry.

When to Check

Check your tires once a month or more. Do not forget to check the compact spare tire, it should be at 60 psi (420 kPa). For additional information regarding the compact spare tire, see *Compact Spare Tire on page 5-81*.

How to Check

Use a good quality pocket-type gage to check tire pressure. You cannot tell if your tires are properly inflated simply by looking at them. Radial tires may look properly inflated even when they are under-inflated. Check the tire's inflation pressure when the tires are cold. Cold means your vehicle has been sitting for at least three hours or driven no more than 1 mile (1.6 km).

Remove the valve cap from the tire valve stem. Press the tire gage firmly onto the valve to get a pressure measurement. If the cold tire inflation pressure matches the recommended pressure on the Tire and Loading Information label, no further adjustment is necessary. If the inflation pressure is low, add air until you reach the recommended amount.

If you overfill the tire, release air by pushing on the metal stem in the center of the tire valve. Re-check the tire pressure with the tire gage.

Be sure to put the valve caps back on the valve stems. They help prevent leaks by keeping out dirt and moisture.

Downloaded from www.Manualslib.com manuals search engine

Tire Pressure Monitor System

The Tire Pressure Monitor System (TPMS) uses radio and sensor technology to check tire pressure levels. The TPMS sensors monitor the air pressure in your vehicle's tires and transmit tire pressure readings to a receiver located in the vehicle.

Each tire, including the spare (if provided), should be checked monthly when cold and inflated to the inflation pressure recommended by the vehicle manufacturer on the vehicle placard or tire inflation pressure label. (If your vehicle has tires of a different size than the size indicated on the vehicle placard or tire inflation pressure label, you should determine the proper tire inflation pressure for those tires.)

As an added safety feature, your vehicle has been equipped with a tire pressure monitoring system (TPMS) that illuminates a low tire pressure telltale when one or more of your tires is significantly under-inflated.

Accordingly, when the low tire pressure telltale illuminates, you should stop and check your tires as soon as possible, and inflate them to the proper pressure. Driving on a significantly under-inflated tire causes the tire to overheat and can lead to tire failure. Under-inflation also reduces fuel efficiency and tire tread life, and may affect the vehicle's handling and stopping ability.

Please note that the TPMS is not a substitute for proper tire maintenance, and it is the driver's responsibility to maintain correct tire pressure, even if under-inflation has not reached the level to trigger illumination of the TPMS low tire pressure telltale.

Your vehicle has also been equipped with a TPMS malfunction indicator to indicate when the system is not operating properly. The TPMS malfunction indicator is combined with the low tire pressure telltale. When the system detects a malfunction, the telltale will flash for approximately one minute and then remain continuously illuminated. This sequence will continue upon subsequent vehicle start-ups as long as the malfunction exists.

When the malfunction indicator is illuminated, the system may not be able to detect or signal low tire pressure as intended. TPMS malfunctions may occur for a variety of reasons, including the installation of replacement or alternate tires or wheels on the vehicle that prevent the TPMS from functioning properly. Always check the TPMS malfunction telltale after replacing one or more tires or wheels on your vehicle to ensure that the replacement or alternate tires and wheels allow the TPMS to continue to function properly.

See *Tire Pressure Monitor Operation on page 5-58*, for additional information.

Downloaded from www.Manualslib.com manuals search engine

Federal Communications Commission (FCC) and Industry and Science Canada

The Tire Pressure Monitor System (TPMS) operates on a radio frequency and complies with Part 15 of the FCC Rules. Operation is subject to the following two conditions:

1. This device may not cause harmful interference.
2. This device must accept any interference received, including interference that may cause undesired operation.

The Tire Pressure Monitor System (TPMS) operates on a radio frequency and complies with RSS-210 of Industry and Science Canada. Operation is subject to the following two conditions:

1. This device may not cause interference.
2. This device must accept any interference received, including interference that may cause undesired operation of the device.

Changes or modifications to this system by other than an authorized service facility could void authorization to use this equipment.

Tire Pressure Monitor Operation

The Tire Pressure Monitor System (TPMS) is designed to warn the driver when a low tire pressure condition exists. TPMS sensors are mounted onto each tire and wheel assembly, excluding the spare tire and wheel assembly. The TPMS sensors monitor the air pressure in the vehicle's tires and transmits the tire pressure readings to a receiver located in the vehicle.

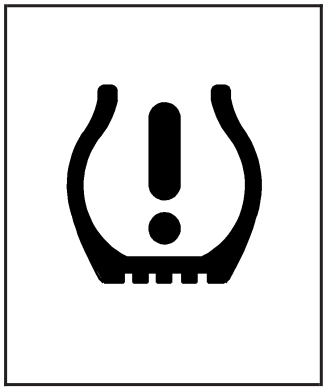

When a low tire pressure condition is detected, the TPMS illuminates the low tire pressure warning light located on the instrument panel cluster.

Downloaded from www.Manualslib.com manuals search engine

This light also comes on for a few seconds and then goes off when you turn the ignition to ON/RUN. This indicates the TPMS is functioning properly. If the low-tire pressure warning light comes on while driving your vehicle, the system may have detected a low-tire condition. You need to stop as soon as possible and check the tires.

The low tire pressure warning light may come on in cool weather when the vehicle is first started, and then turn off as you start to drive. This could be an early indicator that the air pressure in the tire(s) are getting low and need to be inflated to the proper pressure.

A Tire and Loading Information label, attached to your vehicle, shows the size of your vehicle's original equipment tires and the correct inflation pressure for your vehicle's tires when they are cold. See *Loading Your Vehicle on page 4-19*, for an example of the Tire and Loading Information label and its location on your vehicle. Also see *Inflation - Tire Pressure on page 5-55*.

Your vehicle's TPMS can warn you about a low tire pressure condition but it does not replace normal tire maintenance. See *Tire Inspection and Rotation on page 5-61* and *Tires on page 5-49*.

TPMS Malfunction Light

The TPMS will not function properly if one or more of the TPMS sensors are missing or inoperable. When the system detects a malfunction, the low tire warning light flashes for about one minute and then stays on for the remainder of the ignition cycle. The low tire warning light comes on at each ignition cycle until the problem is corrected. Some of the conditions that can cause the malfunction light to come on are:

- One of the road tires has been replaced with the spare tire. The spare tire does not have a TPMS sensor. The TPMS malfunction light and DIC message should go off once you re-install the road tire containing the TPMS sensor.
- The initialization (reset) procedure was not performed correctly after replacing or rotating tires or wheels. See "TPMS Reset" later in this section.
- One or more TPMS sensors are missing or damaged. The DIC message and the TPMS malfunction light should go off when the TPMS sensors are installed and the sensor matching process is performed successfully. See your dealer/retailer for service.

Downloaded from www.Manualslib.com manuals search engine

- Replacement tires or wheels do not match your vehicle's original equipment tires or wheels. Tires and wheels other than those recommended for your vehicle could prevent the TPMS from functioning properly. See *Buying New Tires on page 5-63*.
- Operating electronic devices or being near facilities using radio wave frequencies similar to the TPMS could cause the TPMS sensors to malfunction.
- If tire chains are installed on the vehicle.
- If there is a lot of snow or ice around the wheels or wheel housings.
- If a window tint that affects the radio wave signals is installed.

If the TPMS is not functioning it cannot detect or signal a low tire condition. See your dealer/retailer for service if the TPMS malfunction light comes on and stays on.

TPMS Reset

In order for the tire pressure monitoring system to work properly you need to reset (initialize) the tire pressure monitoring system. Any time you repair or replace a tire or wheel, or rotate the tires the tire pressure monitor system needs to be reset.

Do not reset (initialize) the system without first correcting the cause of the low-tire condition. If the system is reset when the tire pressures are incorrect, the system will not function properly and might not alert you when a tire is low.

When initializing the system, the present tire inflation pressure is stored as standard. The tire pressure warning system determines decreased air pressure by comparing the present and the standard tire inflation pressures. When you change the set tire inflation pressure, it is necessary to initialize the tire pressure warning system.

To reset (initialize) the system:

1. Park the vehicle at a safe place and apply the parking brake. Turn the engine off.
2. Turn the ignition to ACC/ACCESSORY or LOCK/OFF.
3. Adjust the tire pressure of all the installed tires to the specified cold tire inflation pressure level.
4. Turn the ignition to ON/RUN with the engine off.

Downloaded from www.Manualslib.com manuals search engine

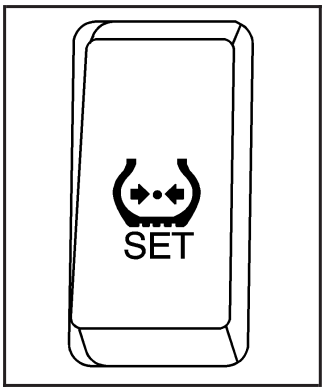

5. Press and hold the tire pressure warning reset switch until the tire pressure warning light flashes slowly on/off three times.

   Wait for a few minutes with the ignition in ON/RUN, and then turn the ignition to ACC/ACCESSORY or LOCK/OFF.

   If the low-tire pressure warning light does not flash three times while you press and hold the reset button, the reset has failed. Repeat the reset process. If the reset cannot be performed, see your dealer/retailer for service.

If you press the tire pressure reset switch while the vehicle is moving, the reset is not performed. If you press the tire pressure reset switch accidentally and initialization is performed, adjust the tire pressure to the specified level and initialize the system again.

Tire Inspection and Rotation

We recommend that you regularly inspect your vehicle's tires, including the spare tire, for signs of wear or damage. See *When It Is Time for New Tires on page 5-63* for more information.

Tires should be rotated every 5,000 to 8,000 miles (8 000 to 13 000 km). See *Part A: Scheduled Maintenance Services on page 6-4*.

The purpose of a regular tire rotation is to achieve a uniform wear for all tires on the vehicle. This will ensure that your vehicle continues to perform most like it did when the tires were new.

Any time you notice unusual wear, rotate the tires as soon as possible and check wheel alignment. Also check for damaged tires or wheels. See *When It Is Time for New Tires on page 5-63* and *Wheel Replacement on page 5-67* for more information.

Downloaded from www.Manualslib.com manuals search engine

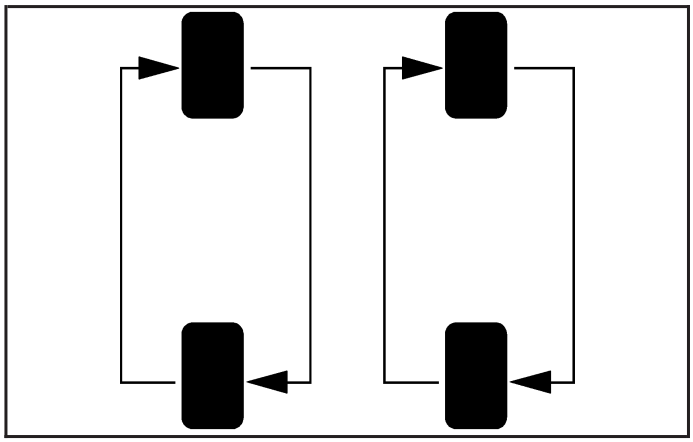

When rotating your vehicle's tires, always use the correct rotation pattern shown here.

Tires should only be moved from front to rear and rear to front on the same side of the vehicle.

Do not include the compact spare tire in the tire rotation.

After the tires have been rotated, adjust the front and rear inflation pressures to the amounts shown on the Tire and Loading Information label. See *Inflation - Tire Pressure on page 5-55* and *Loading Your Vehicle on page 4-19*.

⚠ CAUTION:

Rust or dirt on a wheel, or on the parts to which it is fastened, can make wheel nuts become loose after time. The wheel could come off and cause an accident. When you change a wheel, remove any rust or dirt from places where the wheel attaches to the vehicle. In an emergency, you can use a cloth or a paper towel to do this; but be sure to use a scraper or wire brush later, if needed, to get all the rust or dirt off. See *Changing a Flat Tire on page 5-70*.

Vehicles with a tire pressure monitoring system will need to reset (initialize) the system after each tire rotation. See *Tire Pressure Monitor System on page 5-57*.

Make certain that all wheel nuts are properly tightened. See "Wheel Nut Torque" under *Capacities and Specifications on page 5-95*.

Downloaded from www.Manualslib.com manuals search engine

When It Is Time for New Tires

Various factors, such as maintenance, temperatures, driving speeds, vehicle loading, and road conditions influence when you need new tires.

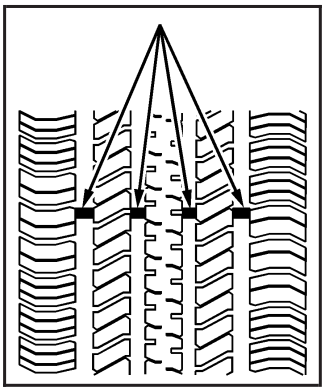

One way to tell when it is time for new tires is to check the treadwear indicators, which will appear when your tires have only 1/16 inch (1.6 mm) or less of tread remaining.

You need new tires if any of the following statements are true:

- You can see the indicators at three or more places around the tire.
- You can see cord or fabric showing through the tire's rubber.
- The tread or sidewall is cracked, cut, or snagged deep enough to show cord or fabric.
- The tire has a bump, bulge, or split.
- The tire has a puncture, cut, or other damage that cannot be repaired well because of the size or location of the damage.

The rubber in tires degrades over time, even if they are not being used. This is also true for the spare tire, if your vehicle has one. Multiple conditions affect how fast this aging takes place, including temperatures, loading conditions, and inflation pressure maintenance. With proper care and maintenance tires will typically wear out before they degrade due to age. If you are unsure about the need to replace your tires as they get older, consult the tire manufacturer for more information.

Buying New Tires

GM has developed and matched specific tires for your vehicle. If you need replacement tires, GM strongly recommends that you get tires that are the same size, brand, load range, speed rating, and construction type (radial and bias-belted tires) as your vehicle's original tires. This way, your vehicle will continue to have tires that are designed to give the same performance and vehicle safety, during normal use, as the original tires. See *Tire Sidewall Labeling on page 5-50* for additional information.

Downloaded from www.Manualslib.com manuals search engine

GM recommends replacing tires in sets of four. This is because uniform tread depth on all tires will help keep your vehicle performing most like it did when the tires were new. Replacing less than a full set of tires can affect the braking and handling performance of your vehicle. See *Tire Inspection and Rotation on page 5-61*.

⚠ CAUTION:

Mixing tires could cause you to lose control while driving. If you mix tires of different sizes, brands, or types (radial and bias-belted tires), the vehicle may not handle properly, and you could have a crash. Using tires of different sizes, brands, or types may also cause damage to your vehicle. Be sure to use the correct size, brand, and type of tires on all wheels. It is all right to drive with your compact spare temporarily, as it was developed for use on your vehicle. See *Compact Spare Tire on page 5-81*.

⚠ CAUTION:

If you use bias-ply tires on your vehicle, the wheel rim flanges could develop cracks after many miles of driving. A tire and/or wheel could fail suddenly, causing a crash. Use only radial-ply tires with the wheels on your vehicle.

Vehicles that have a tire pressure monitoring system could give an inaccurate low-pressure warning if tires not recommended for your vehicle are installed. Tires that do not match the original equipment tires could give a low-pressure warning that is higher or lower than the proper warning level you would get with original equipment tires. See *Tire Pressure Monitor System on page 5-57*.

Your vehicle's original equipment tires are listed on the Tire and Loading Information Label. See *Loading Your Vehicle on page 4-19*, for more information about the Tire and Loading Information label and its location on your vehicle.

Downloaded from www.Manualslib.com manuals search engine

Different Size Tires and Wheels

If you add wheels or tires that are a different size than your original equipment wheels and tires, this may affect the way your vehicle performs, including its braking, ride and handling characteristics, stability, and resistance to rollover. Additionally, if your vehicle has electronic systems such as, anti-lock brakes, traction control, and electronic stability control, the performance of these systems can be affected.

⚠ CAUTION:

If you add different sized wheels, your vehicle may not provide an acceptable level of performance and safety if tires not recommended for those wheels are selected. You may increase the chance that you will crash and suffer serious injury. Only use GM specific wheel and tire systems developed for your vehicle, and have them properly installed by a GM certified technician.

See *Buying New Tires on page 5-63* and *Accessories and Modifications on page 5-3* for additional information.

Uniform Tire Quality Grading

Quality grades can be found where applicable on the tire sidewall between tread shoulder and maximum selection width. For example:

Treadwear 200 Traction AA Temperature A

The following information relates to the system developed by the Unites States National Highway Traffic Safety Administration (NHTSA), which grades tires by treadwear, traction, and temperature performance. This applies only to vehicles sold in the United States. The grades are molded on the sidewalls of most passenger car tires. The Uniform Tire Quality Grading (UTQG) system does not apply to deep tread, winter-type snow tires, space-saver, or temporary use spare tires, tires with nominal rim diameters of 10 to 12 inches (25 to 30 cm), or to some limited-production tires.

While the tires available on General Motors passenger cars and light trucks may vary with respect to these grades, they must also conform to federal safety requirements.

Downloaded from www.Manualslib.com manuals search engine

Treadwear

The treadwear grade is a comparative rating based on the wear rate of the tire when tested under controlled conditions on a specified government test course. For example, a tire graded 150 would wear one and a half (1½) times as well on the government course as a tire graded 100. The relative performance of tires depends upon the actual conditions of their use, however, and may depart significantly from the norm due to variations in driving habits, service practices, and differences in road characteristics and climate.

Traction — AA, A, B, C

The traction grades, from highest to lowest, are AA, A, B, and C. Those grades represent the tire's ability to stop on wet pavement as measured under controlled conditions on specified government test surfaces of asphalt and concrete. A tire marked C may have poor traction performance.

Warning: **The traction grade assigned to this tire is based on straight-ahead braking traction tests, and does not include acceleration, cornering, hydroplaning, or peak traction characteristics.**

Temperature — A, B, C

The temperature grades are A (the highest), B, and C, representing the tire's resistance to the generation of heat and its ability to dissipate heat when tested under controlled conditions on a specified indoor laboratory test wheel. Sustained high temperature can cause the material of the tire to degenerate and reduce tire life, and excessive temperature can lead to sudden tire failure. The grade C corresponds to a level of performance which all passenger car tires must meet under the Federal Motor Vehicle Safety Standard No. 109. Grades B and A represent higher levels of performance on the laboratory test wheel than the minimum required by law.

Warning: **The temperature grade for this tire is established for a tire that is properly inflated and not overloaded. Excessive speed, underinflation, or excessive loading, either separately or in combination, can cause heat buildup and possible tire failure.**

Downloaded from www.Manualslib.com manuals search engine

Wheel Alignment and Tire Balance

The tires and wheels on your vehicle were aligned and balanced carefully at the factory to give you the longest tire life and best overall performance. Adjustments to wheel alignment and tire balancing will not be necessary on a regular basis. However, if you notice unusual tire wear or your vehicle pulling to one side or the other, the alignment might need to be checked. If you notice your vehicle vibrating when driving on a smooth road, the tires and wheels might need to be rebalanced. See your dealer/retailer for proper diagnosis.

Wheel Replacement

Replace any wheel that is bent, cracked, or badly rusted or corroded. If wheel nuts keep coming loose, the wheel, wheel bolts, and wheel nuts should be replaced. If the wheel leaks air, replace it (except some aluminum wheels, which can sometimes be repaired). See your dealer/retailer if any of these conditions exist.

Your dealer/retailer will know the kind of wheel you need.

Each new wheel should have the same load-carrying capacity, diameter, width, offset, and be mounted the same way as the one it replaces.

If you need to replace any of your wheels, wheel bolts, wheel nuts, or Tire Pressure Monitor System (TPMS) sensors, replace them only with new GM original equipment parts. This way, you will be sure to have the right wheel, wheel bolts, wheel nuts, and TPMS sensors for your vehicle.

⚠ CAUTION:

Using the wrong replacement wheels, wheel bolts, or wheel nuts on your vehicle can be dangerous. It could affect the braking and handling of your vehicle, make your tires lose air and make you lose control. You could have a collision in which you or others could be injured. Always use the correct wheel, wheel bolts, and wheel nuts for replacement.

Notice: **The wrong wheel can also cause problems with bearing life, brake cooling, speedometer or odometer calibration, headlamp aim, bumper height, vehicle ground clearance, and tire or tire chain clearance to the body and chassis.**

See *Changing a Flat Tire on page 5-70* for more information.

Downloaded from www.Manualslib.com manuals search engine

Used Replacement Wheels

⚠ CAUTION:

Putting a used wheel on your vehicle is dangerous. You cannot know how it has been used or how far it has been driven. It could fail suddenly and cause a crash. If you have to replace a wheel, use a new GM original equipment wheel.

Tire Chains

Notice: **Use tire chains only where legal and only when you must. Use only SAE Class "S" type chains that are the proper size for your tires. Install them on the front tires and tighten them as tightly as possible with the ends securely fastened. Drive slowly and follow the chain manufacturer's instructions. If you can hear the chains contacting your vehicle, stop and retighten them. If the contact continues, slow down until it stops. Driving too fast or spinning the wheels with chains on will damage your vehicle.**

Downloaded from www.Manualslib.com manuals search engine

If a Tire Goes Flat

It is unusual for a tire to blowout while you are driving, especially if you maintain your vehicle's tires properly. If air goes out of a tire, it is much more likely to leak out slowly. But if you should ever have a blowout, here are a few tips about what to expect and what to do:

If a front tire fails, the flat tire creates a drag that pulls the vehicle toward that side. Take your foot off the accelerator pedal and grip the steering wheel firmly. Steer to maintain lane position, and then gently brake to a stop well out of the traffic lane.

A rear blowout, particularly on a curve, acts much like a skid and may require the same correction you would use in a skid. In any rear blowout remove your foot from the accelerator pedal. Get the vehicle under control by steering the way you want the vehicle to go. It may be very bumpy and noisy, but you can still steer. Gently brake to a stop, well off the road if possible.

⚠ CAUTION:

Lifting a vehicle and getting under it to do maintenance or repairs is dangerous without the appropriate safety equipment and training. The jack provided with your vehicle is designed only for changing a flat tire. If it is used for anything else, you or others could be badly injured or killed if the vehicle slips off the jack. Use the jack provided with your vehicle only for changing a flat tire.

If a tire goes flat, the next part shows how to use the jacking equipment to change a flat tire safely.

Downloaded from www.Manualslib.com manuals search engine

Changing a Flat Tire

If a tire goes flat, avoid further tire and wheel damage by driving slowly to a level place. Turn on the hazard warning flashers. See *Hazard Warning Flashers on page 3-6* for more information.

⚠ CAUTION:

Changing a tire can be dangerous. The vehicle can slip off the jack and roll over or fall on you or other people. You and they could be badly injured or even killed. Find a level place to change your tire. To help prevent the vehicle from moving:

1. **Set the parking brake firmly.**
2. **Put an automatic transmission shift lever in PARK (P), or shift a manual transmission to FIRST (1) or REVERSE (R).**
3. **Turn off the engine and do not restart while the vehicle is raised.**
4. **Do not allow passengers to remain in the vehicle.**

To be certain the vehicle will not move, put blocks at the front and rear of the tire farthest away from the one being changed. That would be the tire on the other side, at the opposite end of the vehicle.

Downloaded from www.Manualslib.com manuals search engine

When you have a flat tire, use the following example as a guide to assist you in the placement of wheel blocks.

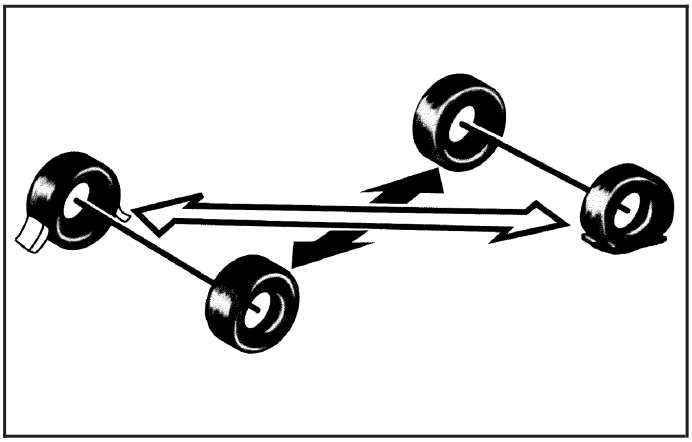

The following information tells you how to use the jack and change a tire.

Removing the Spare Tire and Tools

The jack, wheel wrench, jack handle and spare tire are stowed in the rear of the vehicle, underneath the floor of the cargo area. To remove the spare tire and tools:

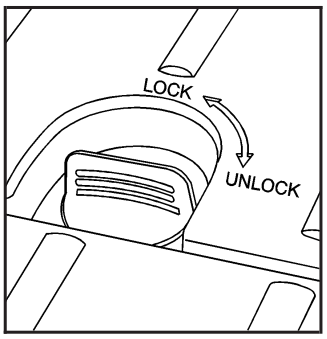

1. Turn the two lock knobs on the floor of the cargo area to UNLOCK.

Downloaded from www.Manualslib.com manuals search engine

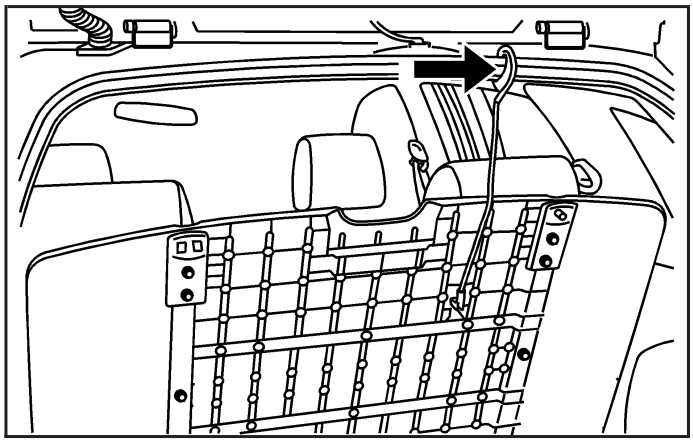

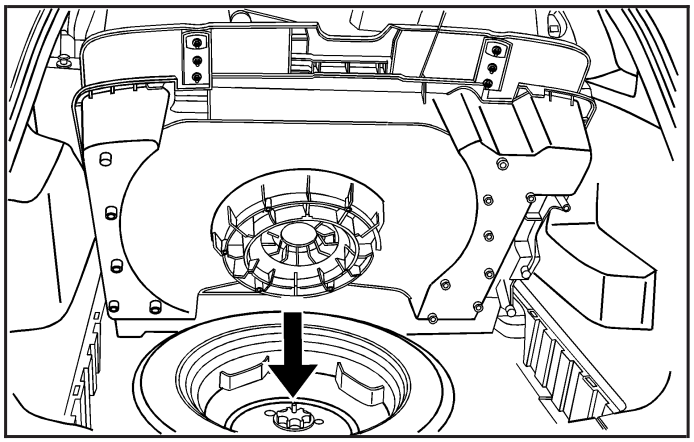

2. Lift up the cargo area floor panel, remove the hook attached to the bottom side of the panel and hook it over the weatherstripping.

Notice: **If you do not put the hook in the proper location, you could damage your vehicle. Always put the hook in the proper location in order to avoid damaging the vehicle.**

3. Remove the jack from the tray on the right side of the compartment and the jack handle and wheel wrench from the top side of the compartment.
4. Remove the center retaining nut and lift up the plastic tray to expose the compact spare tire.
5. Remove the center bolt from the compact spare tire and pull out the compact spare tire. See *Compact Spare Tire on page 5-81*

Downloaded from www.Manualslib.com manuals search engine

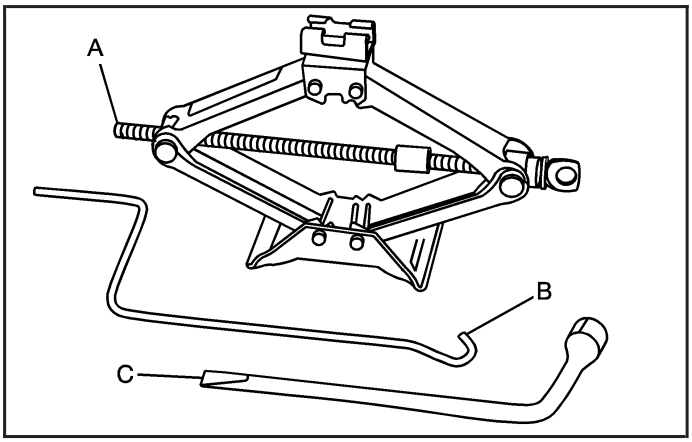

The tools you will be using include the jack (A), jack handle (B) and wheel wrench (C).

Removing the Flat Tire and Installing the Spare Tire

1. Do a safety check before proceeding. See *Changing a Flat Tire on page 5-70* for more information.
2. Attach the jack handle to the jack.
3. Turn the jack handle clockwise to raise the lift head a little.

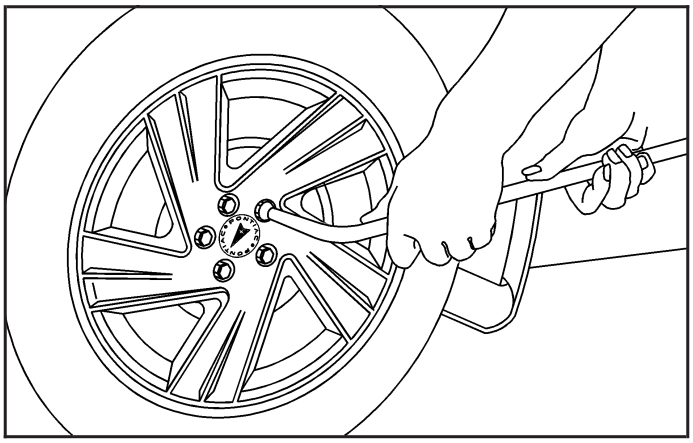

4. Using the wheel wrench, loosen all the wheel nuts. Do not remove them yet.

Downloaded from www.Manualslib.com manuals search engine

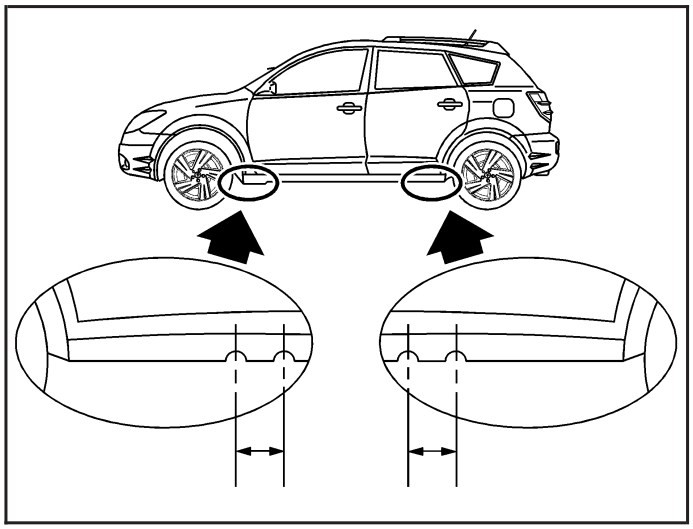

5. Position the jack and raise the jack lift head to fit over the car flange between the two notches.

⚠ CAUTION:

Getting under a vehicle when it is jacked up is dangerous. If the vehicle slips off the jack you could be badly injured or killed. Never get under a vehicle when it is supported only by a jack.

⚠ CAUTION:

Raising your vehicle with the jack improperly positioned can damage the vehicle and even make the vehicle fall. To help avoid personal injury and vehicle damage, be sure to fit the jack lift head into the proper location before raising the vehicle.

Downloaded from www.Manualslib.com manuals search engine

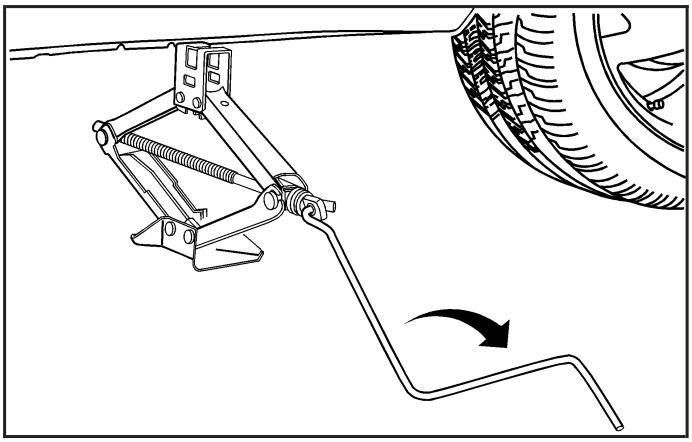

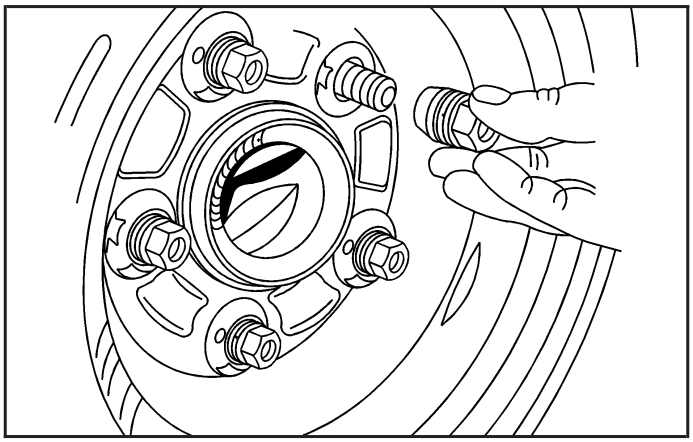

6. Raise the vehicle by turning the jack handle clockwise. Raise the vehicle far enough off the ground so there is enough room for the compact spare tire to fit underneath the wheel well.
7. Remove all the wheel nuts and the flat tire.
8. Install the spare tire.

Downloaded from www.Manualslib.com manuals search engine

⚠ CAUTION:

Rust or dirt on a wheel, or on the parts to which it is fastened, can make wheel nuts become loose after time. The wheel could come off and cause an accident. When you change a wheel, remove any rust or dirt from places where the wheel attaches to the vehicle. In an emergency, you can use a cloth or a paper towel to do this; but be sure to use a scraper or wire brush later, if needed, to get all the rust or dirt off. See *Changing a Flat Tire on page 5-70*.

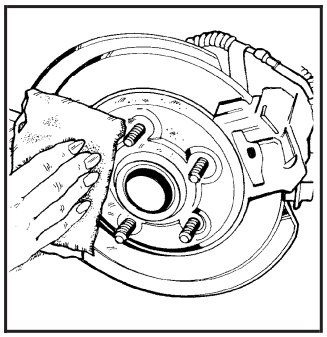

9. Remove any rust or dirt from the wheel bolts, mounting surfaces and spare wheel.

10. Place the compact spare tire on the wheel-mounting surface.

Downloaded from www.Manualslib.com manuals search engine

⚠ CAUTION:

Never use oil or grease on studs or nuts. Because the nuts might come loose. The vehicle's wheel could fall off, causing a crash.

11. Reinstall the wheel nuts with the rounded end of the nuts toward the wheel. Tighten each nut by hand until the wheel is held against the hub.

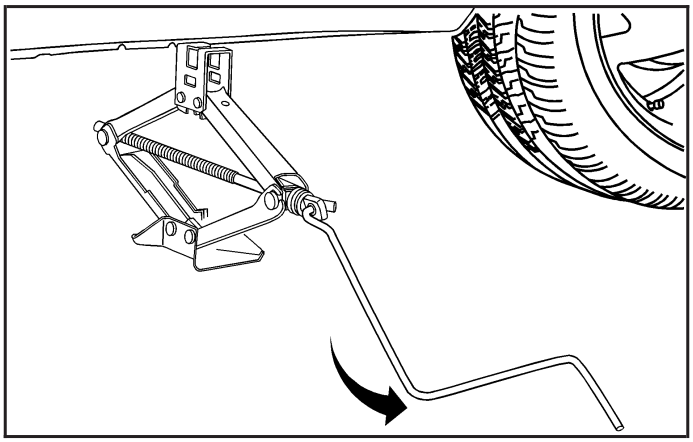

12. Lower the vehicle by turning the jack handle counterclockwise. Lower the jack completely.

Downloaded from www.Manualslib.com manuals search engine

⚠ CAUTION:

Incorrect or improperly tightened wheel nuts can cause the wheel to come loose and even come off. This could lead to a crash. If you have to replace them, be sure to get new original equipment wheel nuts. Stop somewhere as soon as you can and have the nuts tightened with a torque wrench to the proper torque specification. See *Capacities and Specifications on page 5-95* for wheel nut torque specification.

Notice: **Improperly tightened wheel nuts can lead to brake pulsation and rotor damage. To avoid expensive brake repairs, evenly tighten the wheel nuts in the proper sequence and to the proper torque specification. See *Capacities and Specifications on page 5-95* for the wheel nut torque specification.**

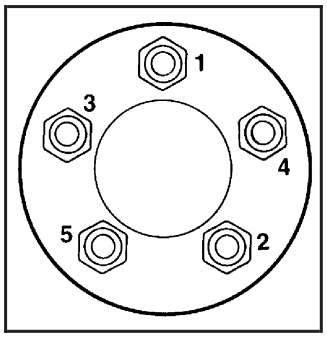

13. Tighten the wheel nuts firmly in a crisscross sequence as shown.

Downloaded from www.Manualslib.com manuals search engine

Storing a Flat or Spare Tire and Tools

⚠ CAUTION:

Storing a jack, a tire, or other equipment in the passenger compartment of the vehicle could cause injury. In a sudden stop or collision, loose equipment could strike someone. Store all these in the proper place.

The compact spare tire storage area is designed only for the compact spare tire, the standard tire cannot be stored there.

To store the flat tire:

1. Remove the center wheel cap before storing the flat tire, if your vehicle has aluminum wheels.
2. Place the flat tire on the rear cargo area floor panel with the outer side of the wheel facing up.
3. Use the tire tie-down straps located under the floor panel to secure the flat tire.

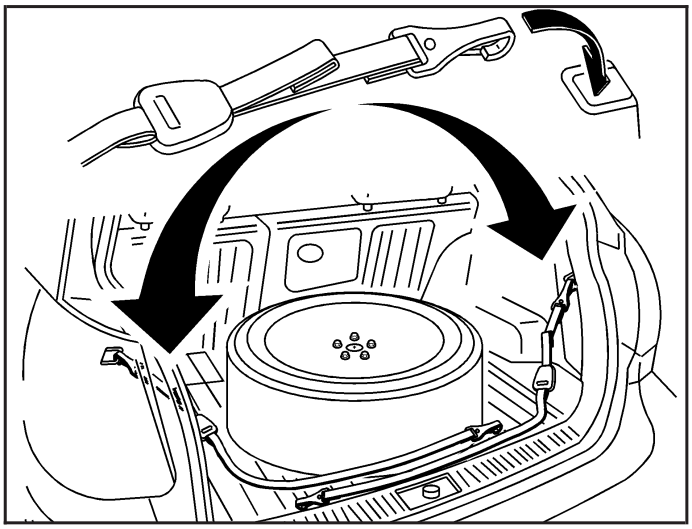

4. Hook the straps (end closest to the buckle) to the rear, upper tie-down hooks.

Downloaded from www.Manualslib.com manuals search engine

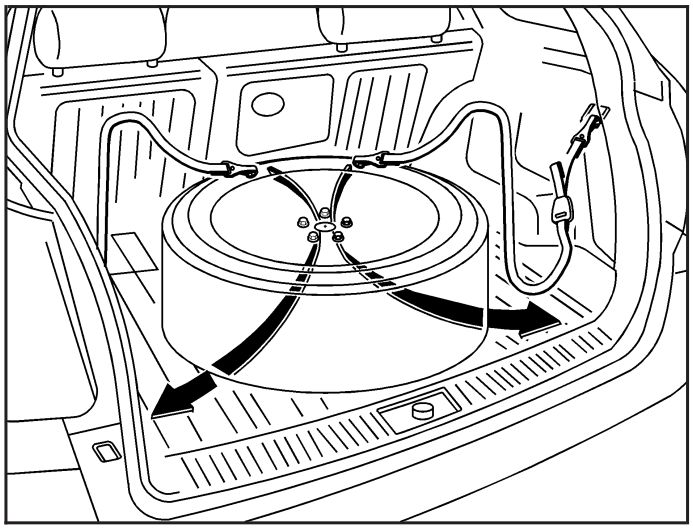

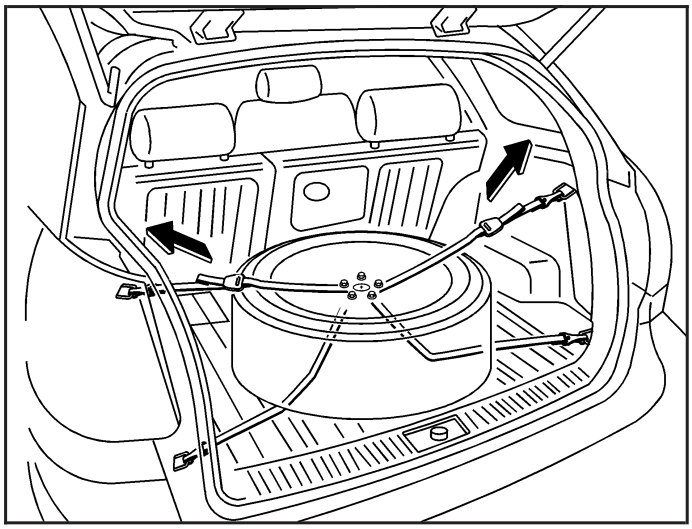

5. Pass the straps through the center hole of the wheel.
6. Attach the other end of the straps to the rear, lower tie-down hooks.
7. Position the tire edge against the rear center end of the floor panel. Pull the end of the straps to make sure the tire is secure.

Use the following diagram as a guide for storing the compact spare tire once you are done using it.

Downloaded from www.Manualslib.com manuals search engine

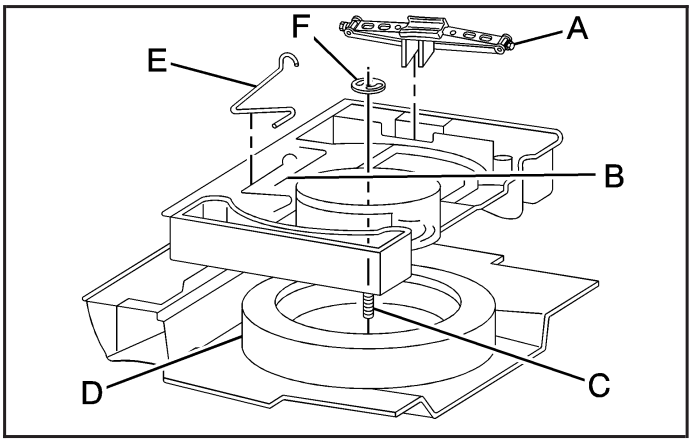

A. Jack
B. Wheel Wrench
C. Bolt
D. Spare Tire
E. Jack Handle
F. Nut

Return the jack (A), jack handle (E), wheel wrench (B) and compact spare tire to the storage area. When storing the compact spare tire, put it in place with the inner side of the wheel facing up.

Compact Spare Tire

Although the compact spare tire was fully inflated when your vehicle was new, it can lose air after a time. Check the inflation pressure regularly. It should be 60 psi (420 kPa).

After installing the compact spare on your vehicle, you should stop as soon as possible and make sure your spare tire is correctly inflated. The compact spare is made to perform well at speeds up to 50 mph (80 km/h), so you can finish your trip and have your full-size tire repaired or replaced where you want. Of course, it is best to replace your spare with a full-size tire as soon as you can. Your spare will last longer and be in good shape in case you need it again.

Notice: **When the compact spare is installed, do not take your vehicle through an automatic car wash with guide rails. The compact spare can get caught on the rails. That can damage the tire and wheel, and maybe other parts of your vehicle.**

Do not use your compact spare on other vehicles.

And do not mix your compact spare tire or wheel with other wheels or tires. They will not fit. Keep your spare tire and its wheel together.

Notice: **Tire chains will not fit your compact spare. Using them can damage your vehicle and can damage the chains too. Do not use tire chains on your compact spare.**

Downloaded from www.Manualslib.com manuals search engine

Appearance Care

Interior Cleaning

Your vehicle's interior will continue to look its best if it is cleaned often. Although not always visible, dust and dirt can accumulate on your upholstery. Dirt can damage carpet, fabric, leather, and plastic surfaces. Regular vacuuming is recommended to remove particles from your upholstery. It is important to keep your upholstery from becoming and remaining heavily soiled. Soils should be removed as quickly as possible. Your vehicle's interior may experience extremes of heat that could cause stains to set rapidly.

Lighter colored interiors may require more frequent cleaning. Use care because newspapers and garments that transfer color to your home furnishings may also transfer color to your vehicle's interior.

When cleaning your vehicle's interior, only use cleaners specifically designed for the surfaces being cleaned. Permanent damage may result from using cleaners on surfaces for which they were not intended. Use glass cleaner only on glass. Remove any accidental over-spray from other surfaces immediately. To prevent over-spray, apply cleaner directly to the cleaning cloth.

Notice: **If you use abrasive cleaners when cleaning glass surfaces on your vehicle, you could scratch the glass and/or cause damage to the rear window defogger. When cleaning the glass on your vehicle, use only a soft cloth and glass cleaner.**

Many cleaners contain solvents that may become concentrated in your vehicle's breathing space. Before using cleaners, read and adhere to all safety instructions on the label. While cleaning your vehicle's interior, maintain adequate ventilation by opening your vehicle's doors and windows.

Dust may be removed from small buttons and knobs using a small brush with soft bristles.

Your dealer/retailer has a product for cleaning your vehicle's glass. Should it become necessary, you can also obtain a product from your dealer/retailer to remove odors from your vehicle's upholstery.

Do not clean your vehicle using the following cleaners or techniques:

- Never use a knife or any other sharp object to remove a soil from any interior surface.
- Never use a stiff brush. It can cause damage to your vehicle's interior surfaces.
- Never apply heavy pressure or rub aggressively with a cleaning cloth. Use of heavy pressure can damage your interior and does not improve the effectiveness of soil removal.

Downloaded from www.Manualslib.com manuals search engine

- Use only mild, neutral-pH soaps. Avoid laundry detergents or dishwashing soaps with degreasers. Using too much soap will leave a residue that leaves streaks and attracts dirt. For liquid cleaners, about 20 drops per gallon (3.78 L) of water is a good guide.
- Do not heavily saturate your upholstery while cleaning.
- Damage to your vehicle's interior may result from the use of many organic solvents such as naptha, alcohol, etc.

Fabric/Carpet

Use a vacuum cleaner with a soft brush attachment frequently to remove dust and loose dirt. A canister vacuum with a beater bar in the nozzle may only be used on floor carpet and carpeted floor mats. For soils, always try to remove them first with plain water or club soda. Before cleaning, gently remove as much of the soil as possible using one of the following techniques:

- For liquids: gently blot the remaining soil with a paper towel. Allow the soil to absorb into the paper towel until no more can be removed.
- For solid dry soils: remove as much as possible and then vacuum.

To clean, use the following instructions:

1. Saturate a lint-free, clean white cloth with water or club soda.
2. Wring the cloth to remove excess moisture.
3. Start on the outside edge of the soil and gently rub toward the center. Continue cleaning, using a clean area of the cloth each time it becomes soiled.
4. Continue to gently rub the soiled area until the cleaning cloth remains clean.
5. If the soil is not completely removed, use a mild soap solution and repeat the cleaning process that was used with plain water.

If any of the soil remains, a commercial fabric cleaner or spot lifter may be necessary. When a commercial upholstery cleaner or spot lifter is to be used, test a small hidden area for colorfastness first. If the locally cleaned area gives any impression that a ring formation may result, clean the entire surface.

After the cleaning process has been completed, a paper towel can be used to blot excess moisture from the fabric or carpet.

Downloaded from www.Manualslib.com manuals search engine

Leather

A soft cloth dampened with water can be used to remove dust. If a more thorough cleaning is necessary, a soft cloth dampened with a mild soap solution can be used. Allow the leather to dry naturally. Do not use heat to dry. Never use steam to clean leather. Never use spot lifters or spot removers on leather. Many commercial leather cleaners and coatings that are sold to preserve and protect leather may permanently change the appearance and feel of your leather and are not recommended. Do not use silicone or wax-based products, or those containing organic solvents to clean your vehicle's interior because they can alter the appearance by increasing the gloss in a non-uniform manner. Never use shoe polish on leather.

Instrument Panel, Vinyl, and Other Plastic Surfaces

A soft cloth dampened with water may be used to remove dust. If a more thorough cleaning is necessary, a clean soft cloth dampened with a mild soap solution can be used to gently remove dust and dirt. Never use spot lifters or removers on plastic surfaces. Many commercial cleaners and coatings that are sold to preserve and protect soft plastic surfaces may permanently change the appearance and feel of your interior and are not recommended. Do not use silicone or wax-based products, or those containing organic solvents to clean your vehicle's interior because they can alter the appearance by increasing the gloss in a non-uniform manner.

Some commercial products may increase gloss on your instrument panel. The increase in gloss may cause annoying reflections in the windshield and even make it difficult to see through the windshield under certain conditions.

Downloaded from www.Manualslib.com manuals search engine

Care of Safety Belts

Keep belts clean and dry.

> **⚠ CAUTION:**
>
> **Do not bleach or dye safety belts. If you do, it may severely weaken them. In a crash, they might not be able to provide adequate protection. Clean safety belts only with mild soap and lukewarm water.**

Weatherstrips

Silicone grease on weatherstrips will make them last longer, seal better, and not stick or squeak. Apply silicone grease with a clean cloth. During very cold, damp weather frequent application may be required.

Washing Your Vehicle

The best way to preserve your vehicle's finish is to keep it clean by washing it often.

Notice: **Certain cleaners contain chemicals that can damage the emblems or nameplates on your vehicle. Check the cleaning product label. If it states that it should not be used on plastic parts, do not use it on your vehicle or damage may occur and it would not be covered by the warranty.**

Do not wash the vehicle in direct sunlight. Use a car washing soap. Do not use cleaning agents that are petroleum based or that contain acid or abrasives, as they can damage the paint, metal or plastic on your vehicle. Approved cleaning products can be obtained from your dealer/retailer. See *Vehicle Care/Appearance Materials on page 5-89*. Follow all manufacturers' directions regarding correct product usage, necessary safety precautions and appropriate disposal of any vehicle care product.

Rinse the vehicle well, before washing and after to remove all cleaning agents completely. If they are allowed to dry on the surface, they could stain.

Dry the finish with a soft, clean chamois or an all-cotton towel to avoid surface scratches and water spotting

High pressure car washes may cause water to enter the vehicle. Avoid using high pressure washes closer than 12 inches (30 cm) to the surface of the vehicle. Use of power washers exceeding 1,200 psi (8 274 kPa) can result in damage or removal of paint and decals.

Downloaded from www.Manualslib.com manuals search engine

Cleaning Exterior Lamps/Lenses

Use only lukewarm or cold water, a soft cloth and a car washing soap to clean exterior lamps and lenses. Follow instructions under *Washing Your Vehicle on page 5-85*.

Finish Care

Occasional waxing or mild polishing of your vehicle by hand may be necessary to remove residue from the paint finish. You can get approved cleaning products from your dealer/retailer. See *Vehicle Care/Appearance Materials on page 5-89*.

If your vehicle has a basecoat/clearcoat paint finish, the clearcoat gives more depth and gloss to the colored basecoat. Always use waxes and polishes that are non-abrasive and made for a basecoat/clearcoat paint finish.

Notice: **Machine compounding or aggressive polishing on a basecoat/clearcoat paint finish may damage it. Use only non-abrasive waxes and polishes that are made for a basecoat/clearcoat paint finish on your vehicle.**

Foreign materials such as calcium chloride and other salts, ice melting agents, road oil and tar, tree sap, bird droppings, chemicals from industrial chimneys, etc., can damage your vehicle's finish if they remain on painted surfaces. Wash the vehicle as soon as possible. If necessary, use non-abrasive cleaners that are marked safe for painted surfaces to remove foreign matter.

Exterior painted surfaces are subject to aging, weather and chemical fallout that can take their toll over a period of years. You can help to keep the paint finish looking new by keeping your vehicle garaged or covered whenever possible.

Protecting Exterior Bright Metal Parts

Bright metal parts should be cleaned regularly to keep their luster. Washing with water is all that is usually needed. However, you may use chrome polish on chrome or stainless steel trim, if necessary.

Use special care with aluminum trim. To avoid damaging protective trim, never use auto or chrome polish, steam or caustic soap to clean aluminum. A coating of wax, rubbed to high polish, is recommended for all bright metal parts.

Downloaded from www.Manualslib.com manuals search engine

Windshield, Backglass, and Wiper Blades

Clean the outside of the windshield and backglass with glass cleaner.

Clean the rubber blades using a lint free cloth or paper towel soaked with windshield washer fluid or a mild detergent. Wash the windshield thoroughly when you clean the blades. Bugs, road grime, sap and a buildup of vehicle wash/wax treatments may cause wiper streaking. Replace the wiper blades if they are worn or damaged.

Wipers can be damaged by:

- Extreme dusty conditions
- Sand and salt
- Heat and sun
- Snow and ice, without proper removal

Aluminum Wheels

Notice: **If you use strong soaps, chemicals, abrasive polishes, cleaners, brushes, or cleaners that contain acid on aluminum or chrome-plated wheels, you could damage the surface of the wheel(s). The repairs would not be covered by your warranty. Use only approved cleaners on aluminum or chrome-plated wheels.**

Keep the wheels clean using a soft clean cloth with mild soap and water. Rinse with clean water. After rinsing thoroughly, dry with a soft clean towel. A wax may then be applied.

Notice: **Using chrome polish on aluminum wheels could damage the wheels. The repairs would not be covered by your warranty. Use chrome polish on chrome wheels only.**

The surface of these wheels is similar to the painted surface of the vehicle. Do not use strong soaps, chemicals, abrasive polishes, abrasive cleaners, cleaners with acid, or abrasive cleaning brushes on them because the surface could be damaged. Do not use chrome polish on aluminum wheels.

Notice: **If you drive your vehicle through an automatic car wash that has silicone carbide tire cleaning brushes, you could damage the aluminum or chrome-plated wheels. The repairs would not be covered by your warranty. Never drive a vehicle equipped with aluminum or chrome-plated wheels through an automatic car wash that uses silicone carbide tire cleaning brushes.**

Downloaded from www.Manualslib.com manuals search engine

Tires

To clean the tires, use a stiff brush with tire cleaner.

Notice: **Using petroleum-based tire dressing products on your vehicle may damage the paint finish and/or tires. When applying a tire dressing, always wipe off any overspray from all painted surfaces on your vehicle.**

Sheet Metal Damage

If the vehicle is damaged and requires sheet metal repair or replacement, make sure the body repair shop applies anti-corrosion material to parts repaired or replaced to restore corrosion protection.

Original manufacturer replacement parts will provide the corrosion protection while maintaining the warranty.

Finish Damage

Any stone chips, fractures or deep scratches in the finish should be repaired right away. Bare metal will corrode quickly and may develop into major repair expense.

Minor chips and scratches can be repaired with touch-up materials available from your dealer/retailer. Larger areas of finish damage can be corrected in your dealer's/retailer's body and paint shop.

Underbody Maintenance

Chemicals used for ice and snow removal and dust control can collect on the underbody. If these are not removed, corrosion and rust can develop on the underbody parts such as fuel lines, frame, floor pan, and exhaust system even though they have corrosion protection.

At least every spring, flush these materials from the underbody with plain water. Clean any areas where mud and debris can collect. Dirt packed in close areas of the frame should be loosened before being flushed. Your dealer/retailer or an underbody car washing system can do this for you.

Chemical Paint Spotting

Some weather and atmospheric conditions can create a chemical fallout. Airborne pollutants can fall upon and attack painted surfaces on the vehicle. This damage can take two forms: blotchy, ring-shaped discolorations, and small, irregular dark spots etched into the paint surface.

Although no defect in the paint job causes this, we will repair, at no charge to the owner, the surfaces of new vehicles damaged by this fallout condition within 12 months or 12,000 miles (20 000 km) of purchase, whichever occurs first.

Downloaded from www.Manualslib.com manuals search engine

Vehicle Care/Appearance Materials

Description	Usage
Polishing Cloth Wax-Treated	Interior and exterior polishing cloth.
Tar and Road Oil Remover	Removes tar, road oil and asphalt.
Chrome Cleaner and Polish	Use on chrome or stainless steel.
White Sidewall Tire Cleaner	Removes soil and black marks from whitewalls.
Vinyl Cleaner	Cleans vinyl.
Glass Cleaner	Removes dirt, grime, smoke and fingerprints.
Chrome and Wire Wheel Cleaner	Removes dirt and grime from chrome wheels and wire wheel covers.
Finish Enhancer	Removes dust, fingerprints, and surface contaminants. Spray on wipe off.

Description	Usage
Swirl Remover Polish	Removes swirl marks, fine scratches and other light surface contamination.
Cleaner Wax	Removes light scratches and protects finish.
Foaming Tire Shine Low Gloss	Cleans, shines and protects tires. No wiping necessary.
Wash Wax Concentrate	Medium foaming shampoo. Cleans and lightly waxes. Biodegradable and phosphate free.
Spot Lifter	Removes spots and stains from carpets, vinyl and cloth upholstery.
Odor Eliminator	Odorless spray odor eliminator used on fabrics, vinyl, leather and carpet.

Downloaded from www.Manualslib.com manuals search engine

Vehicle Identification

Vehicle Identification Number (VIN)

SAMPLE4UX1M072675

This is the legal identifier for your vehicle. It appears on a plate in the front corner of the instrument panel, on the driver side. You can see it if you look through the windshield from outside your vehicle. The VIN also appears on the Vehicle Certification and Service Parts labels and the certificates of title and registration.

Engine Identification

The eighth character in the VIN is the engine code. This code helps you identify your vehicle's engine, specifications, and replacement parts. See *Capacities and Specifications on page 5-95* for your vehicle's engine code.

Service Parts Identification Label

This label is on the inside of the glove box. It is very helpful if you ever need to order parts. The label has the following information:

- Vehicle Identification Number (VIN)
- Model designation
- Paint information
- Production options and special equipment

Do not remove this label from the vehicle.

Electrical System

Add-On Electrical Equipment

Notice: **Do not add anything electrical to your vehicle unless you check with your dealer/retailer first. Some electrical equipment can damage your vehicle and the damage would not be covered by your warranty. Some add-on electrical equipment can keep other components from working as they should.**

Add-on equipment can drain your vehicle's battery, even if your vehicle is not operating.

Your vehicle has an airbag system. Before attempting to add anything electrical to your vehicle, see *Servicing Your Airbag-Equipped Vehicle on page 1-64*.

Downloaded from www.Manualslib.com manuals search engine

Headlamp Wiring

The headlamp wiring is protected by a circuit breaker. An electrical overload will cause the lamps to go on and off, or in some cases to remain off. If this happens, have your headlamp wiring checked right away.

Windshield Wiper Fuses

The windshield wiper motor is protected by a circuit breaker and a fuse. If the motor overheats due to heavy snow or ice, the wiper will stop until the motor cools. If the overload is caused by some electrical problem, and not snow or ice, be sure to get it fixed.

Power Windows and Other Power Options

Circuit breakers in the fuse block protect the power windows and other power accessories. When the current load is too heavy, the circuit breaker opens and closes, protecting the circuit until the problem is fixed or goes away.

Fuses and Circuit Breakers

The wiring circuits in your vehicle are protected from short circuits by a combination of fuses, circuit breakers and fusible thermal links. This greatly reduces the chance of fires caused by electrical problems.

Look at the silver-colored band inside the fuse. If the band is broken or melted, replace the fuse. Be sure you replace a bad fuse with a new one of the identical size and rating.

If you ever have a problem on the road and don't have a spare fuse, you can borrow one that has the same amperage. Just pick some feature of your vehicle that you can get along without – like the radio or cigarette lighter – and use its fuse, if it is the correct amperage. Replace it as soon as you can.

Downloaded from www.Manualslib.com manuals search engine

Instrument Panel Fuse Block

The fuse block is located underneath the instrument panel on the driver side of the vehicle.

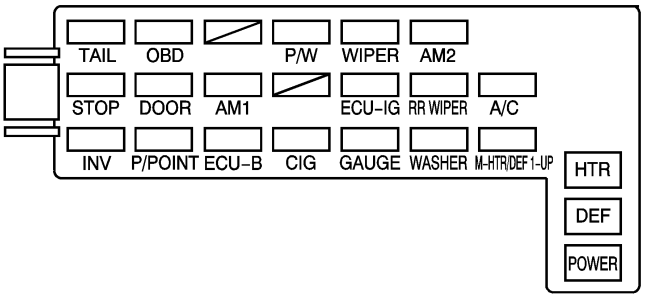

Fuses	Usage
TAIL	Front Parking Lamps, Taillamps, License Plate Lamps, Instrument Panel Lights, Engine Control System
OBD	On-Board Diagnostic System
Empty	Not Used
P/W	Power Windows
WIPER	Windshield Wipers
AM2	Charging System, Air Bag System, Starter System, Engine Control

Fuses	Usage
STOP	Stop Lamps, CHMSL, Engine Control System, Anti-lock Brakes, Cruise Control
DOOR	Power Door Locks, Liftglass Lock
AM1	Cigarette Lighter, Gauge, ECU-IG, Wiper, Rear Wiper, Washer Fuses
Empty	Not Used
ECU-IG	Cruise Control, Anti-lock Brakes, Theft Deterrent System, Automatic Transmission Control System, Electric Cooling Fan
RR WIPER	Rear Window Wiper, Rear Window Defogger
A/C	Air Conditioning
INV	Power Outlets
P/POINT	Power Outlets
ECU-B	Daytime Running Lamps
CIG	Cigarette Lighter, Power Rearview Mirrors, Power Outlets, Audio System, Automatic Transmission Control System

Downloaded from www.Manualslib.com manuals search engine

Fuses	Usage
GAUGE	Gauges and Meters, Back-Up Lamps, Charging System, Power Door Locks, Power Windows, Sunroof, Air Conditioning, Cruise Control
WASHER	Windshield Washers
M-HTR/DEF 1–UP	Engine Control System
HTR	Air Conditioning System
DEF	Rear Window Defogger, M-HTR/DEF 1–UP Fuse
POWER	Power Windows, Electric Moon Roof

Engine Compartment Fuse Block

This engine compartment fuse block is located in the engine compartment on the driver side of the vehicle near the air cleaner. See *Engine Compartment Overview on page 5-12* for more information on location.

Notice: **Spilling liquid on any electrical components on your vehicle may damage it. Always keep the covers on any electrical component.**

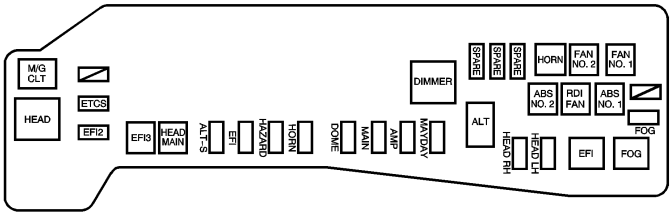

Fuses	Usage
Empty	Not Used
SPARE	Spare Fuse
SPARE	Spare Fuse
SPARE	Spare Fuse
ETCS	Electronic Throttle Control System

Downloaded from www.Manualslib.com manuals search engine

Fuses	Usage
ABS NO. 2	Antilock Brake System (Without Stability Control System)
RDI FAN	Electric Cooling Fan
ABS NO. 1	Antilock Brake System (With Stability Control System)
FOG	Front Fog Lamps
EFI2	Multiport Fuel Injection System/ Sequential Multiport Fuel Injection System, Emission Control System
EFI3	Multiport Fuel Injection System/ Sequential Multiport Fuel Injection System, Emission Control System
HEAD MAIN	Right Headlamp, Left Headlamp Fuses
ALT-S	Charging System
EFI	Electronic Fuel Injection System
HAZARD	Turn Signal Lamps, Emergency Flasher
HORN	Horn
DOME	Interior Lights, Gauges and Meters, Audio System, Remote Keyless Entry System, Navigation System (If Equipped)
MAIN	Starter System, AM2 Fuse
AMP	Audio System

Fuses	Usage
MAYDAY	OnStar® System
ALT	ABS NO.1, ABS NO.2, RDI FAN, FOG, Heater, AM1, POWER, DOOR, ECU-B, TAIL, STOP, P/POINT, INV, OBD Fuses, Charging System
HEAD RH	Right-hand Headlamp, Headlamp High Beam Indicator Lamp
HEAD LH	Left-hand Headlamp

Relays	Usage
M/G	M/G
HEAD	Headlamps
DIMMER	Headlamp Dimmer
HORN	Horn
FAN NO. 2	Cooling Fan System
FAN NO. 1	Cooling Fan System
EFI	Electronic Fuel Injection System
FOG	Fog Lamps

Downloaded from www.Manualslib.com manuals search engine

Capacities and Specifications

The following approximate capacities are given in English and metric conversions.

Application	Capacities	
	English	Metric
Air Conditioning Refrigerant R134a	For the air conditioning system refrigerant charge amount, see the refrigerant caution label located under the hood. See your dealer/retailer for more information.	
Cooling System	6.9 qt	6.5 L
Engine Oil with Filter	4.4 qt	4.2 L
Fuel Tank	13.2 gal	50.0 L
Transmission Fluid		
Automatic Transmission	3.2 qt	3.0 L
Manual Transmission	2.0 qt	1.9 L
Wheel Nut Torque	76 lb ft	103 N•m
All capacities are approximate. When adding, be sure to fill to the approximate level, as recommended in this manual. See *Part D: Recommended Fluids and Lubricants on page 6-19*.		

Engine Specifications

Engine	VIN Code	Transmission	Spark Plug Gap
1.8L L4	8	Automatic and Manual	0.043 inches (1.1 mm)

Downloaded from www.Manualslib.com manuals search engine

Maintenance Replacement Parts

Replacement parts identified below by name, part number, or specification can be obtained from your GM dealer.

Part	GM Part Numbers	Other Part Numbers
Battery	19001602	35–6YR
Engine Air Cleaner/Filter	88969107	A2036C
Engine Oil Filter	88971573	PF1233
Passenger Compartment Air Filter	88970273	CF134
PCV Valve	88974190	—
Spark Plugs*	94859446	SK16R11†, IFR5A11††

*Your engine is fitted with iridium-tipped spark plugs. Use only iridium-tipped spark plugs for better engine performance.
† DENSO
†† NGK

Downloaded from www.Manualslib.com manuals search engine

Engine Drive Belt Routing

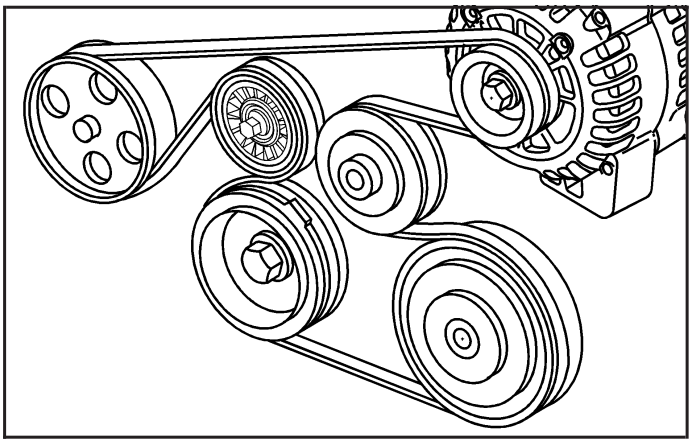

Downloaded from www.Manualslib.com manuals search engine

NOTES

Downloaded from www.Manualslib.com manuals search engine

Section 6 Maintenance Schedule

Maintenance Schedule 6-2
Introduction 6-2
Maintenance Requirements 6-2
Your Vehicle and the Environment 6-2
How This Section is Organized 6-3
Part A: Scheduled Maintenance Services 6-4
Using the Maintenance Schedule 6-4
Scheduled Maintenance 6-4
Part B: Owner Checks and Services 6-12
At Each Fuel Fill 6-12
At Least Once a Month 6-13
At Least Twice a Year 6-13
At Least Once a Year 6-14
Part C: Periodic Maintenance Inspections 6-17
Steering, Suspension and Front Drive
Axle Boot and Seal Inspection 6-17
Exhaust System Inspection 6-17
Fuel System Inspection 6-18
Engine Cooling System Inspection 6-18
Throttle System Inspection 6-18
Brake System Inspection 6-18
Part D: Recommended Fluids and Lubricants 6-19
Part E: Maintenance Record 6-21

Downloaded from www.Manualslib.com manuals search engine

Maintenance Schedule

Introduction

Important: Keep engine oil at the proper level and change as recommended.

Have you purchased the GM Protection Plan? The Plan supplements your new vehicle warranties. See your Warranty and Owner Assistance booklet or your dealer/retailer for details.

Maintenance Requirements

Maintenance intervals, checks, inspections and recommended fluids and lubricants as prescribed in this manual are necessary to keep your vehicle in good working condition. Any damage caused by failure to follow scheduled maintenance may not be covered by warranty.

Your Vehicle and the Environment

Proper vehicle maintenance not only helps to keep your vehicle in good working condition, but also helps the environment. Improper vehicle maintenance can even affect the quality of the air we breathe. Improper fluid levels or the wrong tire inflation can increase the level of emissions from your vehicle. To help protect our environment, and to keep your vehicle in good condition, be sure to maintain your vehicle properly.

Downloaded from www.Manualslib.com manuals search engine

How This Section is Organized

This maintenance schedule is divided into five parts:

"Part A: Scheduled Maintenance Services" explains what to have done and how often. Some of these services can be complex, so unless you are technically qualified and have the necessary equipment, you should let your dealer/retailer do these jobs.

Your dealer/retailer has trained and supported service people that will perform the work using genuine parts.

> **⚠ CAUTION:**
>
> **Performing maintenance work on a vehicle can be dangerous. In trying to do some jobs, you can be seriously injured. Do your own maintenance work only if you have the required know-how and the proper tools and equipment for the job. If you have any doubt, have a qualified technician do the work. See *Doing Your Own Service Work on page 5-4*.**

If you want to purchase service information, see *Service Publications Ordering Information on page 7-15*.

"Part B: Owner Checks and Services" tells you what should be checked and when. It also explains what you can easily do to help keep your vehicle in good condition.

"Part C: Periodic Maintenance Inspections" explains important inspections that your dealer/retailer can perform for you.

"Part D: Recommended Fluids and Lubricants" lists some recommended products necessary to help keep your vehicle properly maintained. These products, or their equivalents, should be used whether you do the work yourself or have it done.

"Part E: Maintenance Record" is a place for you to record and keep track of the maintenance performed on your vehicle. Keep your maintenance receipts. They may be needed to qualify your vehicle for warranty repairs.

Downloaded from www.Manualslib.com manuals search engine

Part A: Scheduled Maintenance Services

In this part are scheduled maintenance services which are to be performed at the mileage intervals specified.

Using the Maintenance Schedule

We want to keep your vehicle in good working condition. But we do not know exactly how you will drive it. You might drive short distances only a few times a week. Or you might drive long distances all the time in very hot, dusty weather. You might use your vehicle in making deliveries. Or you might drive it to work, to do errands, or in many other ways.

Because of the different ways people use their vehicles, maintenance needs vary. You might need more frequent checks and replacements. So please read the following and note how you drive. If you have questions on how to keep your vehicle in good condition, see your dealer/retailer.

This part tells you the maintenance services you should have done and when to schedule them.

When you go to your dealer/retailer for your service needs, you will know that trained and supported service people will perform the work using genuine parts.

The proper fluids and lubricants to use are listed in Part D. Make sure whoever services your vehicle uses these. All parts should be replaced and all necessary repairs done before you or anyone else drives the vehicle.

These schedules are for vehicles that:

- carry passengers and cargo within recommended limits. You will find these on the Tire and Loading Information label. See *Loading Your Vehicle on page 4-19*.
- are driven on reasonable road surfaces within legal driving limits.
- use the recommended fuel. See *Gasoline Octane on page 5-5*.

Scheduled Maintenance

The services shown in this schedule up to 120,000 miles (192 000 km) should be repeated after 120,000 miles (192 000 km) at the same intervals for the life of this vehicle.

See *Part B: Owner Checks and Services on page 6-12*, *Part C: Periodic Maintenance Inspections on page 6-17*, and *Part D: Recommended Fluids and Lubricants on page 6-19*.

Downloaded from www.Manualslib.com manuals search engine

Footnotes

† *The U.S. Environmental Protection Agency or the California Air Resources Board has determined that the failure to perform this maintenance item will not nullify the emissions warranty or limit recall liability prior to the completion of the vehicle's useful life. We, however, urge that all recommended maintenance services be performed at the indicated intervals and the maintenance be recorded.*

+ A good time to check your brakes is during tire rotation. See Brake System Inspection on page 6-18.

5,000 Miles (8 000 km)

- ❑ Change engine oil and filter (or every 3 months, whichever occurs first). *An Emission Control Service.*
- ❑ Rotate tires. See *Tire Inspection and Rotation on page 5-61* for proper rotation pattern and additional information. *(See footnote +.)*
- ❑ Inspect engine air cleaner filter if you are driving in dusty conditions. Replace filter if necessary.

10,000 Miles (16 000 km)

- ❑ Change engine oil and filter (or every 3 months, whichever occurs first). *An Emission Control Service.*
- ❑ Rotate tires. See *Tire Inspection and Rotation on page 5-61* for proper rotation pattern and additional information. *(See footnote +.)*
- ❑ Inspect engine air cleaner filter if you are driving in dusty conditions. Replace filter if necessary.

15,000 Miles (24 000 km)

- ❑ Change engine oil and filter (or every 3 months, whichever occurs first). *An Emission Control Service.*
- ❑ Rotate tires. See *Tire Inspection and Rotation on page 5-61* for proper rotation pattern and additional information. *(See footnote +.)*
- ❑ Inspect engine air cleaner filter if you are driving in dusty conditions. Replace filter if necessary.
- ❑ Inspect passenger compartment air filter.

20,000 Miles (32 000 km)

- ❑ Change engine oil and filter (or every 3 months, whichever occurs first). *An Emission Control Service.*
- ❑ Rotate tires. See *Tire Inspection and Rotation on page 5-61* for proper rotation pattern and additional information. *(See footnote +.)*
- ❑ Inspect engine air cleaner filter if you are driving in dusty conditions. Replace filter if necessary.

Downloaded from www.Manualslib.com manuals search engine

25,000 Miles (40 000 km)

- ❑ Change engine oil and filter (or every 3 months, whichever occurs first). *An Emission Control Service.*
- ❑ Rotate tires. See *Tire Inspection and Rotation on page 5-61* for proper rotation pattern and additional information. *(See footnote +.)*
- ❑ Inspect engine air cleaner filter if you are driving in dusty conditions. Replace filter if necessary.

30,000 Miles (48 000 km)

- ❑ Change engine oil and filter (or every 3 months, whichever occurs first). *An Emission Control Service.*
- ❑ Rotate tires. See *Tire Inspection and Rotation on page 5-61* for proper rotation pattern and additional information. *(See footnote +.)*
- ❑ Replace engine air cleaner filter (or every 24 months, whichever occurs first). See *Engine Air Cleaner/Filter on page 5-17* for more information.
- ❑ Replace passenger compartment air filter.
- ❑ Inspect fuel tank, cap, cap gasket, and lines for damage or leaks (or every 24 months, whichever occurs first). Replace parts as needed. *An Emission Control Service. (See footnote †.)*
- ❑ Change manual transmission fluid every 30,000 miles (48 000 km) only if your vehicle is used to tow a trailer.

35,000 Miles (56 000 km)

- ❑ Change engine oil and filter (or every 3 months, whichever occurs first). *An Emission Control Service.*
- ❑ Rotate tires. See *Tire Inspection and Rotation on page 5-61* for proper rotation pattern and additional information. *(See footnote +.)*
- ❑ Inspect engine air cleaner filter if you are driving in dusty conditions. Replace filter if necessary.

40,000 Miles (64 000 km)

- ❑ Change engine oil and filter (or every 3 months, whichever occurs first). *An Emission Control Service.*
- ❑ Rotate tires. See *Tire Inspection and Rotation on page 5-61* for proper rotation pattern and additional information. *(See footnote +.)*
- ❑ Inspect engine air cleaner filter if you are driving in dusty conditions. Replace filter if necessary.

45,000 Miles (72 000 km)

- ❑ Change engine oil and filter (or every 3 months, whichever occurs first). *An Emission Control Service.*
- ❑ Rotate tires. See *Tire Inspection and Rotation on page 5-61* for proper rotation pattern and additional information. *(See footnote +.)*
- ❑ Inspect engine air cleaner filter if you are driving in dusty conditions. Replace filter if necessary.
- ❑ Inspect passenger compartment air filter.

Downloaded from www.Manualslib.com manuals search engine

50,000 Miles (80 000 km)

- ❑ Change engine oil and filter (or every 3 months, whichever occurs first). *An Emission Control Service.*
- ❑ Rotate tires. See *Tire Inspection and Rotation on page 5-61* for proper rotation pattern and additional information. *(See footnote +.)*
- ❑ Inspect engine air cleaner filter if you are driving in dusty conditions. Replace filter if necessary.

55,000 Miles (88 000 km)

- ❑ Change engine oil and filter (or every 3 months, whichever occurs first). *An Emission Control Service.*
- ❑ Rotate tires. See *Tire Inspection and Rotation on page 5-61* for proper rotation pattern and additional information. *(See footnote +.)*
- ❑ Inspect engine air cleaner filter if you are driving in dusty conditions. Replace filter if necessary.

60,000 Miles (96 000 km)

- ❑ Change engine oil and filter (or every 3 months, whichever occurs first). *An Emission Control Service.*
- ❑ Rotate tires. See *Tire Inspection and Rotation on page 5-61* for proper rotation pattern and additional information. *(See footnote +.)*
- ❑ Replace engine air cleaner filter (or every 24 months, whichever occurs first). See *Engine Air Cleaner/Filter on page 5-17* for more information.
- ❑ Replace passenger compartment air filter.
- ❑ Inspect engine accessory drive belts (or every 48 months, whichever occurs first). Visually inspect belt for fraying, excessive cracks, or obvious damage. Replace belt if necessary. *An Emission Control Service.*
- ❑ Inspect for tappet noise and engine vibration. Adjust valve clearance to factory specifications if necessary (or every 48 months, whichever occurs first). *An Emission Control Service.*
- ❑ Inspect fuel tank, cap, cap gasket, and lines for damage or leaks (or every 24 months, whichever occurs first). Replace parts as needed. *An Emission Control Service. (See footnote †.)*
- ❑ Change manual transmission fluid every 30,000 miles (48 000 km) only if your vehicle is used to tow a trailer.
- ❑ Change automatic transmission fluid every 60,000 miles (96 000 km) if the vehicle is mainly driven under one or more of these conditions:
  - In heavy city traffic where the outside temperature regularly reaches 90°F (32°C) or higher.
  - In hilly or mountainous terrain.
  - When doing frequent trailer towing.
  - Uses such as found in taxi, police, or delivery service.

If you do not use your vehicle under any of these conditions, the fluid does not require changing. See Part D: Recommended Fluids and Lubricants on page 6-19 for the proper fluid to use.

Downloaded from www.Manualslib.com manuals search engine

65,000 Miles 104 000 km)

- ❑ Change engine oil and filter (or every 3 months, whichever occurs first). *An Emission Control Service.*
- ❑ Rotate tires. See *Tire Inspection and Rotation on page 5-61* for proper rotation pattern and additional information. *(See footnote +.)*
- ❑ Inspect engine air cleaner filter if you are driving in dusty conditions. Replace filter if necessary.

70,000 Miles (112 000 km)

- ❑ Change engine oil and filter (or every 3 months, whichever occurs first). *An Emission Control Service.*
- ❑ Rotate tires. See *Tire Inspection and Rotation on page 5-61* for proper rotation pattern and additional information. *(See footnote +.)*
- ❑ Inspect engine air cleaner filter if you are driving in dusty conditions. Replace filter if necessary.

75,000 Miles (120 000 km)

- ❑ Change engine oil and filter (or every 3 months, whichever occurs first). *An Emission Control Service.*
- ❑ Rotate tires. See *Tire Inspection and Rotation on page 5-61* for proper rotation pattern and additional information. *(See footnote +.)*
- ❑ Inspect engine air cleaner filter if you are driving in dusty conditions. Replace filter if necessary.
- ❑ Inspect passenger compartment air filter.
- ❑ Inspect engine accessory drive belts (or 12 months since last inspection). *An Emission Control Service.*

80,000 Miles (128 000 km)

- ❑ Change engine oil and filter (or every 3 months, whichever occurs first). *An Emission Control Service.*
- ❑ Rotate tires. See *Tire Inspection and Rotation on page 5-61* for proper rotation pattern and additional information. *(See footnote +.)*
- ❑ Inspect engine air cleaner filter if you are driving in dusty conditions. Replace filter if necessary.

85,000 Miles (136 000 km)

- ❑ Change engine oil and filter (or every 3 months, whichever occurs first). *An Emission Control Service.*
- ❑ Rotate tires. See *Tire Inspection and Rotation on page 5-61* for proper rotation pattern and additional information. *(See footnote +.)*
- ❑ Inspect engine air cleaner filter if you are driving in dusty conditions. Replace filter if necessary.

Downloaded from www.Manualslib.com manuals search engine

90,000 Miles (144 000 km)

- ❑ Change engine oil and filter (or every 3 months, whichever occurs first). *An Emission Control Service.*
- ❑ Rotate tires. See *Tire Inspection and Rotation on page 5-61* for proper rotation pattern and additional information. *(See footnote +.)*
- ❑ Replace engine air cleaner filter (or every 24 months, whichever occurs first). See *Engine Air Cleaner/Filter on page 5-17* for more information.
- ❑ Replace passenger compartment air filter.
- ❑ Inspect engine accessory drive belts (or 12 months since last inspection). *An Emission Control Service.*
- ❑ Inspect fuel tank, cap, cap gasket, and lines for damage or leaks (or every 24 months, whichever occurs first). Replace parts as needed. *An Emission Control Service. (See footnote †.)*
- ❑ Change manual transmission fluid every 30,000 miles (48 000 km) only if your vehicle is used to tow a trailer.

95,000 Miles (152 000 km)

- ❑ Change engine oil and filter (or every 3 months, whichever occurs first). *An Emission Control Service.*
- ❑ Rotate tires. See *Tire Inspection and Rotation on page 5-61* for proper rotation pattern and additional information. *(See footnote +.)*
- ❑ Inspect engine air cleaner filter if you are driving in dusty conditions. Replace filter if necessary.

100,000 Miles (160 000 km)

- ❑ Change engine oil and filter (or every 3 months, whichever occurs first). *An Emission Control Service.*
- ❑ Rotate tires. See *Tire Inspection and Rotation on page 5-61* for proper rotation pattern and additional information. *(See footnote +.)*
- ❑ Inspect engine air cleaner filter if you are driving in dusty conditions. Replace filter if necessary.

Downloaded from www.Manualslib.com manuals search engine

105,000 Miles (168 000 km)

- ❑ Change engine oil and filter (or every 3 months, whichever occurs first). *An Emission Control Service.*
- ❑ Rotate tires. See *Tire Inspection and Rotation on page 5-61* for proper rotation pattern and additional information. *(See footnote +.)*
- ❑ Inspect engine air cleaner filter if you are driving in dusty conditions. Replace filter if necessary.
- ❑ Inspect passenger compartment air filter.
- ❑ Inspect engine accessory drive belts (or every 48 months, whichever occurs first). Visually inspect belt for fraying, excessive cracks, or obvious damage. Replace belt if necessary. *An Emission Control Service.*

110,000 Miles (176 000 km)

- ❑ Change engine oil and filter (or every 3 months, whichever occurs first). *An Emission Control Service.*
- ❑ Rotate tires. See *Tire Inspection and Rotation on page 5-61* for proper rotation pattern and additional information. *(See footnote +.)*
- ❑ Inspect engine air cleaner filter if you are driving in dusty conditions. Replace filter if necessary.

115,000 Miles (184 000 km)

- ❑ Change engine oil and filter (or every 3 months, whichever occurs first). *An Emission Control Service.*
- ❑ Rotate tires. See *Tire Inspection and Rotation on page 5-61* for proper rotation pattern and additional information. *(See footnote +.)*
- ❑ Inspect engine air cleaner filter if you are driving in dusty conditions. Replace filter if necessary.

Downloaded from www.Manualslib.com manuals search engine

120,000 Miles (192 000 km)

- ❑ Change engine oil and filter (or every 3 months, whichever occurs first). *An Emission Control Service.*
- ❑ Rotate tires. See *Tire Inspection and Rotation on page 5-61* for proper rotation pattern and additional information. *(See footnote +.)*
- ❑ Replace engine air cleaner filter (or every 24 months, whichever occurs first). See *Engine Air Cleaner/Filter on page 5-17* for more information.
- ❑ Replace passenger compartment air filter.
- ❑ Inspect engine accessory drive belts (or every 48 months, whichever occurs first). Visually inspect belt for fraying, excessive cracks, or obvious damage. Replace belt if necessary. *An Emission Control Service.*
- ❑ Replace spark plugs. *An Emission Control Service.*
- ❑ Inspect for tappet noise and engine vibration. Adjust valve clearance to factory specifications if necessary (or every 48 months, whichever occurs first). *An Emission Control Service.*
- ❑ Inspect fuel tank, cap, cap gasket, and lines for damage or leaks (or every 24 months, whichever occurs first). Replace parts as needed. *An Emission Control Service. (See footnote †.)*
- ❑ Change manual transmission fluid every 30,000 miles (48 000 km) only if your vehicle is used to tow a trailer.
- ❑ Change automatic transmission fluid every 60,000 miles (96 000 km) if the vehicle is mainly driven under one or more of these conditions:
  - − In heavy city traffic where the outside temperature regularly reaches 90°F (32°C) or higher.
  - − In hilly or mountainous terrain.
  - − When doing frequent trailer towing.
  - − Uses such as found in taxi, police, or delivery service.

If you do not use your vehicle under any of these conditions, the fluid does not require changing. See Part D: Recommended Fluids and Lubricants on page 6-19 for the proper fluid to use.

150,000 Miles (240 000 km)

- ❑ Drain, flush, and refill the cooling system (or every 5 years, whichever occurs first). This service can be complex; you should have your dealer/retailer perform this service. See *Engine Coolant on page 5-23* for what to use. Inspect hoses. Clean radiator, condenser, pressure cap, and neck. Pressure test cooling system and pressure cap. *An Emission Control Service.*

Downloaded from www.Manualslib.com manuals search engine

Part B: Owner Checks and Services

Listed in this part are owner checks and services which should be performed at the intervals specified to help ensure the safety, dependability and emission control performance of your vehicle.

Be sure any necessary repairs are completed at once. Whenever any fluids or lubricants are added to your vehicle, make sure they are the proper ones, as shown in Part D.

At Each Fuel Fill

It is important to perform these underhood checks at each fuel fill.

Engine Oil Level Check

Notice: **It is important to check the engine oil regularly and keep it at the proper level. Failure to keep the engine oil at the proper level can cause damage to the engine not covered by your warranty.**

Check the engine oil level and add the proper oil if necessary. See *Engine Oil on page 5-13*.

Engine Coolant Level Check

Check the engine coolant level and add DEX-COOL® coolant mixture if necessary. See *Engine Coolant on page 5-23*.

Windshield Washer Fluid Level Check

Check the windshield washer fluid level in the windshield washer fluid reservoir and add the proper fluid if necessary. See *Windshield Washer Fluid on page 5-34*.

Hood Latch Operation Check

Pull the primary hood latch release handle inside the vehicle. The secondary latch should keep the hood from opening all the way when the primary latch is released. Make sure the hood closes firmly. See *Hood Release on page 5-10*.

Downloaded from www.Manualslib.com manuals search engine

At Least Once a Month

Tire Inflation Check

Inspect the tires and make sure the tires are inflated to the correct pressures. Do not forget to check the spare tire. See *Inflation - Tire Pressure on page 5-55*.

At Least Twice a Year

Restraint System Check

Make sure the safety belt reminder light and safety belt assemblies are working properly. Look for any other loose or damaged safety belt system parts. If you see anything that might keep a safety belt system from doing its job, have it repaired. Have any torn or frayed safety belts replaced. Also see *Checking the Restraint Systems on page 1-66*.

Wiper Blade Check

Inspect wiper blades for wear, cracking, or contamination. Clean the windshield and wiper blades, if contaminated. Replace wiper blades that are worn or damaged. See *Windshield Wiper Blade Replacement on page 5-48* and *Windshield, Backglass, and Wiper Blades on page 5-87* for more information.

Weatherstrip Lubrication

Silicone grease on weatherstrips will make them last longer, seal better, and not stick or squeak. Apply silicone grease with a clean cloth. During very cold, damp weather more frequent application may be required. See *Part D: Recommended Fluids and Lubricants on page 6-19*.

Fluid Level Check

Check the power steering pump, rear axle, transfer case, and automatic or manual transmission fluid levels and add as needed. See *Power Steering Fluid on page 5-33* and *Automatic Transmission Fluid on page 5-19* or *Manual Transmission Fluid on page 5-21*. Check for leaks. A fluid loss in these systems could indicate a problem. Have the system inspected and repaired at once.

Downloaded from www.Manualslib.com manuals search engine

At Least Once a Year

Key Lock Cylinders Service

Lubricate the key lock cylinders with the lubricant specified in Part D.

Seat Operation Check

Make sure the head restraints stay in position and all seat latches lock. Check that the recliner holds by pushing and pulling the seatback while it is reclined.

Body Lubrication Service

Lubricate all hood latch assembly, secondary latch, pivots, spring anchor, release pawl, hood and body door hinges, rear compartment, and any folding seat hardware. Part D tells you what to use. More frequent lubrication may be required when exposed to a corrosive environment.

Starter Switch Check

⚠ CAUTION:

When you are doing this inspection, the vehicle could move suddenly. If the vehicle moves, you or others could be injured.

1. Before you start, be sure you have enough room around the vehicle.
2. Firmly apply both the parking brake and the regular brake. See *Parking Brake on page 2-27*.
   Do not use the accelerator pedal, and be ready to turn off the engine immediately if it starts.
3. On automatic transmission vehicles, try to start the engine in each gear. The vehicle should start only in PARK (P) or NEUTRAL (N). If the vehicle starts in any other position, contact your dealer/retailer for service.
   On manual transmission vehicles, put the shift lever in NEUTRAL (N), push the clutch pedal down halfway, and try to start the engine. The vehicle should start only when the clutch pedal is pushed down all the way to the floor. If the vehicle starts when the clutch pedal is not pushed all the way down, contact your dealer/retailer for service.

Downloaded from www.Manualslib.com manuals search engine

Automatic Transmission Shift Lock Control System Check

⚠ CAUTION:

When you are doing this inspection, the vehicle could move suddenly. If the vehicle moves, you or others could be injured.

1. Before you start, be sure you have enough room around the vehicle. It should be parked on a level surface.
2. Firmly apply the parking brake. See *Parking Brake on page 2-27*.

   Be ready to apply the regular brake immediately if the vehicle begins to move.
3. With the engine off, turn the ignition to ON/RUN, but do not start the engine. Without applying the regular brake, try to move the shift lever out of PARK (P) with normal effort. If the shift lever moves out of PARK (P), contact your dealer/retailer for service.

Ignition Transmission Lock Check

While parked, and with the parking brake set, try to turn the ignition to LOCK/OFF in each shift lever position.

- With an automatic transmission, the ignition should turn to LOCK/OFF only when the shift lever is in PARK (P).
- With a manual transmission, the ignition should turn to LOCK/OFF only if you push the ignition key in farther, while turning it toward LOCK/OFF.

Contact your dealer/retailer if service is required.

Downloaded from www.Manualslib.com manuals search engine

Parking Brake and Automatic Transmission Park (P) Mechanism Check

⚠ CAUTION:

When you are doing this check, your vehicle could begin to move. You or others could be injured and property could be damaged. Make sure there is room in front of your vehicle in case it begins to roll. Be ready to apply the regular brake at once should the vehicle begin to move.

Park on a fairly steep hill, with the vehicle facing downhill. Keeping your foot on the regular brake, set the parking brake.

- To check the parking brake's holding ability: With the engine running and transmission in NEUTRAL (N), slowly remove foot pressure from the regular brake pedal. Do this until the vehicle is held by the parking brake only.
- To check the PARK (P) mechanism's holding ability: With the engine running, shift to PARK (P). Then release the parking brake followed by the regular brake.

Contact your dealer/retailer if service is required.

Underbody Flushing Service

At least every spring, use plain water to flush any corrosive materials from the underbody. Take care to clean thoroughly any areas where mud and other debris can collect.

Downloaded from www.Manualslib.com manuals search engine

Part C: Periodic Maintenance Inspections

Listed in this part are inspections and services which should be performed at least twice a year, for instance, each spring and fall. *You should let your dealer/retailer do these jobs. Make sure any necessary repairs are completed at once.*

Proper procedures to perform these services can be found in a service manual. See *Service Publications Ordering Information on page 7-15*.

Steering, Suspension and Front Drive Axle Boot and Seal Inspection

Inspect the front and rear suspension and steering system for damaged, loose or missing parts, signs of wear or lack of lubrication. Inspect the power steering lines and hoses for proper hook-up, binding, leaks, cracks, chafing, etc. Clean and then inspect the drive axle boot seals for damage, tears or leakage. Replace seals if necessary.

Exhaust System Inspection

Inspect the complete exhaust system. Inspect the body near the exhaust system. Look for broken, damaged, missing, or out-of-position parts as well as open seams, holes, loose connections, or other conditions which could cause a heat build-up in the floor pan or could let exhaust fumes into the vehicle. See *Engine Exhaust on page 2-32*.

Downloaded from www.Manualslib.com manuals search engine

Fuel System Inspection

Inspect the complete fuel system for damage or leaks.

Engine Cooling System Inspection

Inspect the hoses and have them replaced if they are cracked, swollen or deteriorated. Inspect all pipes, fittings and clamps; replace as needed. Clean the outside of the radiator and air conditioning condenser. To help ensure proper operation, a pressure test of the cooling system and pressure cap is recommended at least once a year.

Throttle System Inspection

Inspect the throttle system for interference or binding, and for damaged or missing parts. Replace parts as needed. Replace any components that have high effort or excessive wear. Do not lubricate accelerator and cruise control cables.

Brake System Inspection

Inspect the complete system. Inspect brake lines and hoses for proper hook-up, binding, leaks, cracks, chafing, etc. Inspect disc brake pads for wear and rotors for surface condition. Also inspect drum brake linings for wear and cracks. Inspect other brake parts, including drums, wheel cylinders, calipers, parking brake, etc. Check parking brake adjustment. You may need to have your brakes inspected more often if your driving habits or conditions result in frequent braking.

Downloaded from www.Manualslib.com manuals search engine

Part D: Recommended Fluids and Lubricants

Fluids and lubricants identified below by name, part number, or specification can be obtained from your dealer/retailer.

Usage	Fluid/Lubricant
Engine Oil	Engine oil which meets GM Standard GM6094M and displays the American Petroleum Institute Certified for Gasoline Engines starburst symbol. To determine the proper viscosity for your vehicle's engine, see *Engine Oil on page 5-13*.
Engine Coolant	50/50 mixture of clean, drinkable water and use only DEX-COOL® Coolant. See *Engine Coolant on page 5-23*.
Hydraulic Brake/Clutch System	Delco® Supreme 11 Brake Fluid or equivalent DOT-3 brake fluid.

Usage	Fluid/Lubricant
Windshield Washer Solvent	Optikleen® Washer Solvent.
Power Steering System	DEXRON®-VI Automatic Transmission Fluid.
Manual Transmission	GM Goodwrench® Synthetic Manual Transmission Fluid (GM Part No. U.S. 12346190, in Canada 10953477 — 1 quart) or SAE 75W-90 GL-5 gear oil.
Automatic Transmission	Use only T-IV Automatic Transmission Fluid (GM Part No. U.S. 88900925, in Canada 22689186).
Key Lock Cylinders	Multi-Purpose Lubricant, Superlube (GM Part No. U.S. 12346241, in Canada 10953474).
Manual Transmission Shift Linkage	Chassis Lubricant (GM Part No. U.S. 12377985, in Canada 88901242) or lubricant meeting requirements of NLGI #2, Category LB or GC-LB.

Downloaded from www.Manualslib.com manuals search engine

Usage	Fluid/Lubricant
Clutch Linkage Pivot Points	Chassis Lubricant (GM Part No. U.S. 12377985, in Canada 88901242) or lubricant meeting requirements of NLGI #2, Category LB or GC-LB.
Floor Shift Linkage	Lubriplate Lubricant Aerosol (GM Part No. U.S. 12346293, in Canada 992723) or lubricant meeting requirements of NLGI #2 Category LB or GC-LB.
Chassis Lubrication	Chassis Lubricant (GM Part No. U.S. 12377985, in Canada 88901242) or lubricant meeting requirements of NLGI #2, Category LB or GC-LB.

Usage	Fluid/Lubricant
Hood Latch Assembly, Secondary Latch, Pivots, Spring Anchor, and Release Pawl	Lubriplate Lubricant Aerosol (GM Part No. U.S. 12346293, in Canada 992723) or lubricant meeting requirements of NLGI #2, Category LB or GC-LB.
Hood and Door Hinges	Multi-Purpose Lubricant, Superlube (GM Part No. U.S. 12346241, in Canada 10953474).
Weatherstrip Conditioning	Weatherstrip Lubricant (GM Part No. U.S. 3634770, in Canada 10953518) or Dielectric Silicone Grease (GM Part No. U.S. 12345579, in Canada 992887).

Downloaded from www.Manualslib.com manuals search engine

Part E: Maintenance Record

After the scheduled services are performed, record the date, odometer reading, and who performed the service and any additional information from “Owner Checks and Services” or “Periodic Maintenance” on the following record pages. Also, you should retain all maintenance receipts.

Maintenance Record

Date	Odometer Reading	Serviced By	Maintenance Record

Downloaded from www.Manualslib.com manuals search engine

Maintenance Record (cont'd)

Date	Odometer Reading	Serviced By	Maintenance Record

Downloaded from www.Manualslib.com manuals search engine

Maintenance Record (cont'd)

Date	Odometer Reading	Serviced By	Maintenance Record

Downloaded from www.Manualslib.com manuals search engine

Maintenance Record (cont'd)

Date	Odometer Reading	Serviced By	Maintenance Record

Downloaded from www.Manualslib.com manuals search engine

Section 7 Customer Assistance Information

Customer Assistance and Information 7-2
Customer Satisfaction Procedure 7-2
Online Owner Center 7-4
Customer Assistance for Text Telephone (TTY) Users 7-5
Customer Assistance Offices 7-5
GM Mobility Reimbursement Program 7-6
Roadside Assistance Program 7-6
Scheduling Service Appointments 7-9
Courtesy Transportation 7-9
Collision Damage Repair 7-11

Reporting Safety Defects 7-14
Reporting Safety Defects to the United States Government 7-14
Reporting Safety Defects to the Canadian Government 7-14
Reporting Safety Defects to General Motors 7-14
Service Publications Ordering Information 7-15

Vehicle Data Recording and Privacy 7-16
Event Data Recorders 7-16
OnStar® 7-17
Navigation System 7-17
Radio Frequency Identification (RFID) 7-17

Downloaded from www.Manualslib.com manuals search engine

Customer Assistance and Information

Customer Satisfaction Procedure

Your satisfaction and goodwill are important to your dealer and to Pontiac. Normally, any concerns with the sales transaction or the operation of your vehicle will be resolved by your dealer's sales or service departments. Sometimes, however, despite the best intentions of all concerned, misunderstandings can occur. If your concern has not been resolved to your satisfaction, the following steps should be taken:

STEP ONE: Discuss your concern with a member of dealership management. Normally, concerns can be quickly resolved at that level. If the matter has already been reviewed with the sales, service, or parts manager, contact the owner of the dealership or the general manager.

STEP TWO: If after contacting a member of dealership management, it appears your concern cannot be resolved by the dealership without further help, in the U.S., contact the Pontiac Customer Assistance Center by calling 1-800-762-2737. In Canada, contact General Motors of Canada Customer Communication Centre in Oshawa by calling 1-800-263-3777 (English) or 1-800-263-7854 (French).

We encourage you to call the toll-free number in order to give your inquiry prompt attention. Please have the following information available to give the Customer Assistance Representative:

- Vehicle Identification Number (VIN). This is available from the vehicle registration or title, or the plate at the top left of the instrument panel and visible through the windshield.
- Dealership name and location.
- Vehicle delivery date and present mileage.

When contacting Pontiac, please remember that your concern will likely be resolved at a dealer's facility. That is why we suggest you follow Step One first if you have a concern.

Downloaded from www.Manualslib.com manuals search engine

STEP THREE — U.S. Owners: Both General Motors and your dealer are committed to making sure you are completely satisfied with your new vehicle. However, if you continue to remain unsatisfied after following the procedure outlined in Steps One and Two, you should file with the BBB Auto Line Program to enforce your rights.

The BBB Auto Line Program is an out of court program administered by the Council of Better Business Bureaus to settle automotive disputes regarding vehicle repairs or the interpretation of the New Vehicle Limited Warranty. Although you may be required to resort to this informal dispute resolution program prior to filing a court action, use of the program is free of charge and your case will generally be heard within 40 days. If you do not agree with the decision given in your case, you may reject it and proceed with any other venue for relief available to you.

You can contact the BBB Auto Line Program using the toll-free telephone number or write them at the following address:

BBB Auto Line Program
Council of Better Business Bureaus, Inc.
4200 Wilson Boulevard
Suite 800
Arlington, VA 22203-1838

Telephone: 1-800-955-5100

This program is available in all 50 states and the District of Columbia. Eligibility is limited by vehicle age, mileage and other factors. General Motors reserves the right to change eligibility limitations and/or discontinue its participation in this program.

STEP THREE — Canadian Owners: In the event that you do not feel your concerns have been addressed after following the procedure outlined in Steps One and Two, General Motors of Canada Limited wants you to be aware of its participation in a no-charge Mediation/Arbitration Program. General Motors of Canada Limited has committed to binding arbitration of owner disputes involving factory-related vehicle service claims. The program provides for the review of the facts involved by an impartial third party arbiter, and may include an informal hearing before the arbiter. The program is designed so that the entire dispute settlement process, from the time you file your complaint to the final decision, should be completed in approximately 70 days. We believe our impartial program offers advantages over courts in most jurisdictions because it is informal, quick, and free of charge.

For further information concerning eligibility in the Canadian Motor Vehicle Arbitration Plan (CAMVAP), call toll-free 1-800-207-0685. Alternatively, you can call the General Motors Customer Communication Centre, 1-800-263-3777 (English), 1-800-263-7854 (French), or write to:

Mediation/Arbitration Program
c/o Customer Communication Centre
General Motors of Canada Limited
Mail Code: CA1-163-005
1908 Colonel Sam Drive
Oshawa, Ontario L1H 8P7

Your inquiry should be accompanied by your Vehicle Identification Number (VIN).

Downloaded from www.Manualslib.com manuals search engine

Online Owner Center (United States only)

The Owner Center is a resource for your GM ownership needs. Specific vehicle information can be found in one place.

The Online Owner Center allows you to:

- Get e-mail service reminders.
- Access information about your specific vehicle, including tips and videos and an electronic version of this owner manual.
- Keep track of your vehicle's service history and maintenance schedule.
- Find GM dealers/retailers for service nationwide.
- Receive special promotions and privileges only available to members.

Refer to www.MyGMLink.com on the web for updated information and to register your vehicle.

My GM Canada (Canada only)

My GM Canada is a password-protected section of gmcanada.com where you can save information on GM vehicles, get personalized offers, and use handy tools and forms with greater ease.

Here are a few of the valuable tools and services you will have access to:

- My Showroom: Find and save information on vehicles and current offers in your area.
- My Dealers/Retailers: Save details such as address and phone number for each of your preferred GM Dealers or Retailers.
- My Driveway: Receive service reminders and helpful advice on owning and maintaining your vehicle.
- My Preferences: Manage your profile, subscribe to E-News and use tools and forms with greater ease.

To sign up to My GM Canada, visit the My GM Canada section within www.gmcanada.com.

Downloaded from www.Manualslib.com manuals search engine

Customer Assistance for Text Telephone (TTY) Users

To assist customers who are deaf, hard of hearing, or speech-impaired and who use Text Telephones (TTYs), Pontiac has TTY equipment available at its Customer Assistance Center. Any TTY user in the U.S. can communicate with Pontiac by dialing: 1-800-833-PONT (7668). (TTY users in Canada can dial 1-800-263-3830.)

Customer Assistance Offices

Pontiac encourages customers to call the toll-free number for assistance. However, if a customer wishes to write or e-mail Pontiac, the letter should be addressed to:

United States — Customer Assistance

Pontiac Customer Assistance Center
P.O. Box 33172
Detroit, MI 48232-5172

www.Pontiac.com
1-800-762-2737 or
1-800-833-7668 (For Text Telephone devices (TTYs))
Roadside Assistance: 1-800-ROADSIDE (762-3743)
Fax Number: 313-381-0022

From Puerto Rico:
1-800-496-9992 (English)
1-800-496-9993 (Spanish)
Fax Number: 313-381-0022

From U.S. Virgin Islands:
1-800-496-9994
Fax Number: 313-381-0022

Canada — Customer Assistance

General Motors of Canada Limited
Customer Communication Centre, CA1-163-005
1908 Colonel Sam Drive
Oshawa, Ontario L1H 8P7
www.gmcanada.com
1-800-263-3777 (English)
1-800-263-7854 (French)
1-800-263-3830 (For Text Telephone devices (TTYs))
Roadside Assistance: 1-800-268-6800

Overseas — Customer Assistance

Please contact the local General Motors Business Unit.

Mexico, Central America and Caribbean Islands/Countries (Except Puerto Rico and U.S. Virgin Islands) — Customer Assistance

General Motors de Mexico, S. de R.L. de C.V.
Customer Assistance Center
Paseo de la Reforma #2740
Col. Lomas de Bezares
C.P. 11910, Mexico, D.F.
01-800-508-0000
Long Distance: 011-52-53 29 0 800

Downloaded from www.Manualslib.com manuals search engine

GM Mobility Reimbursement Program

This program, available to qualified applicants, can reimburse you up to $1,000 of the cost of eligible aftermarket adaptive equipment required for your vehicle, such as hand controls or a wheelchair/scooter lift.

The offer is available for a very limited period of time from the date of vehicle purchase/lease. For more details, or to determine your vehicle's eligibility, visit gmmobility.com or call the GM Mobility Assistance Center at 1-800-323-9935. Text telephone (TTY) users, call 1-800-833-9935.

General Motors of Canada also has a Mobility Program. Call 1-800-GM-DRIVE (463-7483) for details. TTY users call 1-800-263-3830.

Roadside Assistance Program

For vehicles purchased in the U.S., call **1-800-ROADSIDE (762-3743); (Text telephone (TTY): 1-888-889-2438)**.

For vehicles purchased in Canada, call **1-800-268-6800**.

Service is available 24 hours a day, 365 days a year.

As the owner of a new Pontiac vehicle, you are automatically enrolled in the Pontiac Roadside Assistance program.

Who is Covered?

Roadside Assistance coverage is for the vehicle operator, regardless of ownership. In Canada, a person driving this vehicle without the consent of the owner is not eligible for coverage.

Downloaded from www.Manualslib.com manuals search engine

Services Provided

The following services are provided in the U.S. and Canada up to 5 years/100,000 miles (160 000 km), whichever occurs first, and, in Canada only, up to a maximum coverage of $100.

- **Fuel Delivery:** Delivery of enough fuel for the vehicle to get to the nearest service station (approximately $5 in Canada). In Canada, service to provide diesel may be restricted. For safety reasons, propane and other alternative fuels will not be provided through this service.
- **Lock-out Service:** Lock-out service is covered at no charge if you are unable to gain entry into your vehicle. A remote unlock may be available if you have an active OnStar® subscription. To ensure security, the driver must present personal identification before lock-out service is provided. In Canada, the vehicle registration is also required.
- **Emergency Tow From a Public Roadway or Highway:** Tow to the nearest dealership for warranty service or in the event of a vehicle-disabling crash. Winch-out assistance is provided when the vehicle is mired in sand, mud, or snow.
- **Flat Tire Change:** Installation of a spare tire in good condition, when equipped and properly inflated, is covered at no charge. The customer is responsible for the repair or replacement of the tire if not covered by a warrantable failure.
- **Jump Start:** A battery jump start is covered at no charge if the vehicle does not start.
- **Trip Routing Service (Canada only):** Upon request, Roadside Assistance will send you detailed, computer personalized maps, highlighting your choice of either the most direct route or the most scenic route to your destination, anywhere in North America, along with helpful travel information pertaining to your trip.

  Please allow three weeks before your planned departure date. Trip routing requests will be limited to six per calendar year.

Downloaded from www.Manualslib.com manuals search engine

- **Trip Interruption Benefits and Assistance (Canada only):** In the event of a warranty related vehicle disablement, while en route and over 250 kilometres from the original point of departure, you may qualify for trip interruption expense assistance. This assistance covers reasonable reimbursement of up to a maximum of $500 (Canadian) for (A) meals (maximum of $50/day), (B) lodging (maximum of $100/night) and (C) alternate ground transportation (maximum of $40/day). This benefit is to assist you with some of the unplanned expense you may incur while waiting for your vehicle to be repaired.

  Pre-authorization, original detailed receipts and a copy of the repair order are required.

  Once authorization has been given, your advisor will help you make any necessary arrangements and explain how to claim for trip interruption expense assistance.

- **Alternative Service (Canada only):** There may be times, when Roadside Assistance cannot provide timely assistance. Your advisor may authorize you to secure local emergency road service, and you will be reimbursed up to $100 upon submission of the original receipt to Roadside Assistance.

In many instances, mechanical failures may be covered. However, any cost for parts and labor for non-warranty repairs are the responsibility of the driver.

Pontiac and General Motors of Canada Limited reserve the right to limit services or reimbursement to an owner or driver when, in their sole discretion, the claims become excessive in frequency or type of occurrence.

Calling For Assistance

For prompt and efficient assistance when calling, please provide the following to the Roadside Assistance Representative:

- Your name, home address, and home telephone number
- Telephone number of your location
- Location of the vehicle
- Model, year, color, and license plate number of the vehicle
- Odometer reading, Vehicle Identification Number (VIN), and delivery date of the vehicle
- Description of the problem

Downloaded from www.Manualslib.com manuals search engine

Towing and Road Service Exclusions

Specifically excluded from Roadside Assistance coverage are towing or services for vehicles operated on a non-public roadway or highway, fines, impound towing caused by a violation of local, Municipal, State, Provincial, or Federal law, and mounting, dismounting or changing of snow tires, chains, or other traction devices.

Roadside Assistance is not part of or included in the coverage provided by the New Vehicle Limited Warranty. Pontiac and General Motors of Canada Limited reserve the right to make any changes or discontinue the Roadside Assistance program at any time without notification.

Scheduling Service Appointments

When your vehicle requires warranty service, contact your dealer/retailer and request an appointment. By scheduling a service appointment and advising your service consultant of your transportation needs, your dealer/retailer can help minimize your inconvenience.

If your vehicle cannot be scheduled into the service department immediately, keep driving it until it can be scheduled for service, unless, of course, the problem is safety-related. If it is, please call your dealership/retailer, let them know this, and ask for instructions.

If the dealer/retailer requests that you simply drop the vehicle off for service, you are urged to do so as early in the work day as possible to allow for the same day repair.

Courtesy Transportation

To enhance your ownership experience, we and our participating dealers are proud to offer Courtesy Transportation, a customer support program for vehicles with the Bumper to Bumper (Base Warranty Coverage period in Canada) and extended powertrain warranty in both the U.S. and Canada.

Several courtesy transportation options are available to assist in reducing your inconvenience when warranty repairs are required.

Courtesy Transportation is not a part of the New Vehicle Limited Warranty. A separate booklet entitled “Warranty and Owner Assistance Information” furnished with each new vehicle provides detailed warranty coverage information.

Downloaded from www.Manualslib.com manuals search engine

Transportation Options

Warranty service can generally be completed while you wait. However, if you are unable to wait, GM helps to minimize your inconvenience by providing several transportation options. Depending on the circumstances, your dealer can offer you one of the following:

Shuttle Service

Shuttle service is the preferred means of offering Courtesy Transportation. Dealers may provide you with shuttle service to get you to your destination with minimal interruption of your daily schedule. This includes one-way or round trip shuttle service within reasonable time and distance parameters of the dealer's area.

Public Transportation or Fuel Reimbursement

If your vehicle requires overnight warranty repairs, and public transportation is used instead of the dealer's shuttle service, the expense must be supported by original receipts and can only be up to the maximum amount allowed by GM for shuttle service. In addition, for U.S. customers, should you arrange transportation through a friend or relative, limited reimbursement for reasonable fuel expenses may be available. Claim amounts should reflect actual costs and be supported by original receipts. See your dealer for information regarding the allowance amounts for reimbursement of fuel or other transportation costs.

Courtesy Rental Vehicle

Your dealer may arrange to provide you with a courtesy rental vehicle or reimburse you for a rental vehicle that you obtain if your vehicle is kept for an overnight warranty repair. Rental reimbursement will be limited and must be supported by original receipts. This requires that you sign and complete a rental agreement and meet state/provincial, local, and rental vehicle provider requirements. Requirements vary and may include minimum age requirements, insurance coverage, credit card, etc. You are responsible for fuel usage charges and may also be responsible for taxes, levies, usage fees, excessive mileage, or rental usage beyond the completion of the repair.

It may not be possible to provide a like-vehicle as a courtesy rental.

Downloaded from www.Manualslib.com manuals search engine

Additional Program Information

All program options, such as shuttle service, may not be available at every dealer. Please contact your dealer for specific information about availability. All Courtesy Transportation arrangements will be administered by appropriate dealer personnel.

General Motors reserves the right to unilaterally modify, change or discontinue Courtesy Transportation at any time and to resolve all questions of claim eligibility pursuant to the terms and conditions described herein at its sole discretion.

Collision Damage Repair

If your vehicle is involved in a collision and it is damaged, have the damage repaired by a qualified technician using the proper equipment and quality replacement parts. Poorly performed collision repairs diminish your vehicle's resale value, and safety performance can be compromised in subsequent collisions.

Collision Parts

Genuine GM Collision parts are new parts made with the same materials and construction methods as the parts with which your vehicle was originally built. Genuine GM Collision parts are your best choice to ensure that your vehicle's designed appearance, durability, and safety are preserved. The use of Genuine GM parts can help maintain your GM New Vehicle Warranty.

Recycled original equipment parts may also be used for repair. These parts are typically removed from vehicles that were total losses in prior crashes. In most cases, the parts being recycled are from undamaged sections of the vehicle. A recycled original equipment GM part, may be an acceptable choice to maintain your vehicle's originally designed appearance and safety performance, however, the history of these parts is not known. Such parts are not covered by your GM New Vehicle Limited Warranty, and any related failures are not covered by that warranty.

Aftermarket collision parts are also available. These are made by companies other than GM and may not have been tested for your vehicle. As a result, these parts may fit poorly, exhibit premature durability/corrosion problems, and may not perform properly in subsequent collisions. Aftermarket parts are not covered by your GM New Vehicle Limited Warranty, and any vehicle failure related to such parts are not covered by that warranty.

Downloaded from www.Manualslib.com manuals search engine

Repair Facility

GM also recommends that you choose a collision repair facility that meets your needs before you ever need collision repairs. Your dealer/retailer may have a collision repair center with GM-trained technicians and state of the art equipment, or be able to recommend a collision repair center that has GM-trained technicians and comparable equipment.

Insuring Your Vehicle

Protect your investment in your GM vehicle with comprehensive and collision insurance coverage. There are significant differences in the quality of coverage afforded by various insurance policy terms. Many insurance policies provide reduced protection to your GM vehicle by limiting compensation for damage repairs by using aftermarket collision parts. Some insurance companies will not specify aftermarket collision parts. When purchasing insurance, we recommend that you assure your vehicle will be repaired with GM original equipment collision parts. If such insurance coverage is not available from your current insurance carrier, consider switching to another insurance carrier.

If your vehicle is leased, the leasing company may require you to have insurance that assures repairs with Genuine GM Original Equipment Manufacturer (OEM) parts or Genuine Manufacturer replacement parts. Read your lease carefully, as you may be charged at the end of your lease for poor quality repairs.

If a Crash Occurs

Here is what to do if you are involved in a crash.

- Try to relax and then check to make sure you are all right. If you are uninjured, make sure that no one else in your vehicle, or the other vehicle, is injured.
- If there has been an injury, call emergency services for help. Do not leave the scene of a crash until all matters have been taken care of. Move your vehicle only if its position puts you in danger or you are instructed to move it by a police officer.
- Give only the necessary and requested information to police and other parties involved in the crash. Do not discuss your personal condition, mental frame of mind, or anything unrelated to the crash. This will help guard against post-crash legal action.
- If you need roadside assistance, call GM Roadside Assistance. See *Roadside Assistance Program on page 7-6* for more information.
- If your vehicle cannot be driven, know where the towing service will be taking it. Get a card from the tow truck operator or write down the driver's name, the service's name, and the phone number.
- Remove any valuables from your vehicle before it is towed away. Make sure this includes your insurance information and registration if you keep these items in your vehicle.

Downloaded from www.Manualslib.com manuals search engine

- Gather the important information you will need from the other driver. Things like name, address, phone number, driver's license number, vehicle license plate, vehicle make, model and model year, Vehicle Identification Number (VIN), insurance company and policy number, and a general description of the damage to the other vehicle.
- If possible, call your insurance company from the scene of the crash. They will walk you through the information they will need. If they ask for a police report, phone or go to the police department headquarters the next day and you can get a copy of the report for a nominal fee. In some states/provinces with "no fault" insurance laws, a report may not be necessary. This is especially true if there are no injuries and both vehicles are driveable.
- Choose a reputable collision repair facility for your vehicle. Whether you select a dealer/retailer or a private collision repair facility to fix the damage, make sure you are comfortable with them. Remember, you will have to feel comfortable with their work for a long time.
- Once you have an estimate, read it carefully and make sure you understand what work will be performed on your vehicle. If you have a question, ask for an explanation. Reputable shops welcome this opportunity.

Managing the Vehicle Damage Repair Process

In the event that your vehicle requires damage repairs, GM recommends that you take an active role in its repair. If you have a pre-determined repair facility of choice, take your vehicle there, or have it towed there. Specify to the facility that any required replacement collision parts be original equipment parts, either new Genuine GM parts or recycled original GM parts. Remember, recycled parts will not be covered by your GM vehicle warranty.

Insurance pays the bill for the repair, but you must live with the repair. Depending on your policy limits, your insurance company may initially value the repair using aftermarket parts. Discuss this with your repair professional, and insist on Genuine GM parts. Remember if your vehicle is leased you may be obligated to have the vehicle repaired with Genuine GM parts, even if your insurance coverage does not pay the full cost.

If another party's insurance company is paying for the repairs, you are not obligated to accept a repair valuation based on that insurance company's collision policy repair limits, as you have no contractual limits with that company. In such cases, you can have control of the repair and parts choices as long as cost stays within reasonable limits.

Downloaded from www.Manualslib.com manuals search engine

Reporting Safety Defects

Reporting Safety Defects to the United States Government

If you believe that your vehicle has a defect which could cause a crash or could cause injury or death, you should immediately inform the National Highway Traffic Safety Administration (NHTSA) in addition to notifying General Motors.

If NHTSA receives similar complaints, it may open an investigation, and if it finds that a safety defect exists in a group of vehicles, it may order a recall and remedy campaign. However, NHTSA cannot become involved in individual problems between you, your dealer/retailer, or General Motors.

To contact NHTSA, you may call the Vehicle Safety Hotline toll-free at 1-888-327-4236 (TTY: 1-800-424-9153); go to http://www.safercar.gov; or write to:

Administrator, NHTSA
400 Seventh Street, SW.
Washington D.C., 20590

You can also obtain other information about motor vehicle safety from http://www.safercar.gov.

Reporting Safety Defects to the Canadian Government

If you live in Canada, and you believe that your vehicle has a safety defect, notify Transport Canada immediately, in addition to notifying General Motors of Canada Limited. Call them at 1-800-333-0510 or write to:

Transport Canada
Road Safety Branch
2780 Sheffield Road
Ottawa, Ontario K1B 3V9

Reporting Safety Defects to General Motors

In addition to notifying NHTSA (or Transport Canada) in a situation like this, please notify General Motors.

Call 1-800-762-2737, or write:

Pontiac Customer Assistance Center
P.O. Box 33172
Detroit, MI 48232-5172

In Canada, call 1-800-263-3777 (English) or 1-800-263-7854 (French), or write:

General Motors of Canada Limited
Customer Communication Centre, CA1-163-005
1908 Colonel Sam Drive
Oshawa, Ontario L1H 8P7

Downloaded from www.Manualslib.com manuals search engine

Service Publications Ordering Information

Service Manuals

Service Manuals have the diagnosis and repair information on engines, transmission, axle suspension, brakes, electrical, steering, body, etc.

Service Bulletins

Service Bulletins' give additional technical service information needed to knowledgeably service General Motors cars and trucks. Each bulletin contains instructions to assist in the diagnosis and service of your vehicle.

Owner Information

Owner publications are written specifically for owners and intended to provide basic operational information about the vehicle. The owner manual includes the Maintenance Schedule for all models.

In-Portfolio: Includes a Portfolio, Owner Manual, and Warranty Booklet.

RETAIL SELL PRICE: $35.00 (U.S.) plus processing fee

Without Portfolio: Owner Manual only.

RETAIL SELL PRICE: $25.00 (U.S.) plus processing fee

Current and Past Model Order Forms

Technical Service Bulletins and Manuals are available for current and past model GM vehicles. To request an order form, specify year and model name of the vehicle.

ORDER TOLL FREE: 1-800-551-4123 Monday-Friday 8:00 AM - 6:00 PM Eastern Time

For Credit Card Orders Only (VISA-MasterCard-Discover), visit Helm, Inc. on the World Wide Web at: www.helminc.com

Or you can write to:

Helm, Incorporated
P.O. Box 07130
Detroit, MI 48207

Prices are subject to change without notice and without incurring obligation. Allow ample time for delivery.

Note to Canadian Customers: All listed prices are quoted in U.S. funds. Canadian residents are to make checks payable in U.S. funds.

Downloaded from www.Manualslib.com manuals search engine

Vehicle Data Recording and Privacy

Your GM vehicle has a number of sophisticated computers that record information about the vehicle's performance and how it is driven. For example, your vehicle uses computer modules to monitor and control engine and transmission performance, to monitor the conditions for airbag deployment and deploy airbags in a crash and, if so equipped, to provide antilock braking to help the driver control the vehicle. These modules may store data to help your dealer/retailer technician service your vehicle. Some modules may also store data about how you operate the vehicle, such as rate of fuel consumption or average speed. These modules may also retain the owner's personal preferences, such as radio pre-sets, seat positions, and temperature settings.

Event Data Recorders

This vehicle has an Event Data Recorder (EDR). The main purpose of an EDR is to record, in certain crash or near crash-like situations, such as an airbag deployment or hitting a road obstacle, data that will assist in understanding how a vehicle's systems performed. The EDR is designed to record data related to vehicle dynamics and safety systems for a short period of time, typically 30 seconds or less. The EDR in this vehicle is designed to record such data as:

- How various systems in your vehicle were operating
- Whether or not the driver and passenger safety belts were buckled/fastened
- How far, if at all, the driver was pressing the accelerator and/or brake pedal
- How fast the vehicle was traveling

This data can help provide a better understanding of the circumstances in which crashes and injuries occur.

Important: EDR data is recorded by your vehicle only if a non-trivial crash situation occurs; no data is recorded by the EDR under normal driving conditions and no personal data (e.g., name, gender, age, and crash location) is recorded. However, other parties, such as law enforcement, could combine the EDR data with the type of personally identifying data routinely acquired during a crash investigation.

Downloaded from www.Manualslib.com manuals search engine

To read data recorded by an EDR, special equipment is required, and access to the vehicle or the EDR is needed. In addition to the vehicle manufacturer, other parties, such as law enforcement, that have the special equipment, can read the information if they have access to the vehicle or the EDR.

GM will not access this data or share it with others except: with the consent of the vehicle owner or, if the vehicle is leased, with the consent of the lessee; in response to an official request of police or similar government office; as part of GM's defense of litigation through the discovery process; or, as required by law. Data that GM collects or receives may also be used for GM research needs or may be made available to others for research purposes, where a need is shown and the data is not tied to a specific vehicle or vehicle owner.

OnStar®

If your vehicle has OnStar and you subscribe to the OnStar services, please refer to the OnStar Terms and Conditions for information on data collection and use. See also *OnStar® System on page 2-35* in this manual for more information.

Navigation System

If your vehicle has a navigation system, use of the system may result in the storage of destinations, addresses, telephone numbers, and other trip information. Refer to the navigation system operating manual for information on stored data and for deletion instructions.

Radio Frequency Identification (RFID)

RFID technology is used in some vehicles for functions such as tire pressure monitoring and ignition system security, as well as in connection with conveniences such as key fobs for remote door locking/unlocking and starting, and in-vehicle transmitters for garage door openers. RFID technology in GM vehicles does not use or record personal information or link with any other GM system containing personal information.

Downloaded from www.Manualslib.com manuals search engine

NOTES

Downloaded from www.Manualslib.com manuals search engine

A

Accessories and Modifications 5-3
Adding Equipment to Your Airbag-Equipped
  Vehicle 1-65
Additives, Fuel 5-6
Add-On Electrical Equipment 5-90
Air Cleaner/Filter, Engine 5-17
Air Conditioning 3-20
Airbag
  Passenger Status Indicator 3-30
  Readiness Light 3-29
Airbag System 1-50
  What Will You See After an Airbag Inflates? 1-58
  When Should an Airbag Inflate? 1-55
  Where Are the Airbags? 1-52
Airbag Systems
  Adding Equipment to Your Airbag-Equipped
    Vehicle 1-65
  How Does an Airbag Restrain? 1-57
  Passenger Sensing System 1-59
  Servicing Your Airbag-Equipped Vehicle 1-64
  What Makes an Airbag Inflate? 1-57
Antenna, Fixed Mast 3-64
Antenna, XM™ Satellite Radio Antenna System 3-64
Antilock Brake System (ABS) 4-4
Antilock Brake, System Warning Light 3-33
Appearance Care
  Aluminum Wheels 5-87
  Care of Safety Belts 5-85
  Chemical Paint Spotting 5-88
  Cleaning Exterior Lamps/Lenses 5-86
  Fabric/Carpet 5-83
  Finish Care 5-86
  Finish Damage 5-88
  Instrument Panel, Vinyl, and Other
    Plastic Surfaces 5-84
  Interior Cleaning 5-82
  Leather 5-84
  Sheet Metal Damage 5-88
  Tires 5-88
  Underbody Maintenance 5-88
  Vehicle Care/Appearance Materials 5-89
  Washing Your Vehicle 5-85
  Weatherstrips 5-85
  Windshield, Backglass, and Wiper Blades 5-87
Appointments, Scheduling Service 7-9
Ashtray 3-19
Audio System 3-42
  Fixed Mast Antenna 3-64
  Radio Reception 3-63
  Setting the Time 3-43
  XM™ Satellite Radio Antenna System 3-64
Audio System(s) 3-44

Downloaded from www.Manualslib.com manuals search engine

Automatic Headlamp System 3-16
Automatic Transmission
Fluid 5-19
Operation 2-23

B

Battery 5-38
Brake
Emergencies 4-5
System Inspection 6-18
Brakes 5-35
Panic Assist 4-7
System Warning Light 3-32
Braking 4-3
Braking in Emergencies 4-5
Break-In, New Vehicle 2-18
Bulb Replacement 5-43
Back-Up Lamps 5-47
Center High-Mounted Stoplamp (CHMSL) 5-45
Halogen Bulbs 5-43
Headlamp Aiming 5-42
Headlamps, Front Turn Signal, and
Parking Lamps 5-43
Replacement Bulbs 5-48
Taillamps, Turn Signal, and Stoplamps 5-46
Buying New Tires 5-63

C

California Fuel 5-5
California Perchlorate Materials Requirements 5-4
California Proposition 65 Warning 5-3
Canadian Owners ii
Capacities and Specifications 5-95
Carbon Monoxide 2-10, 2-32, 4-15, 4-27
Care of
Safety Belts 5-85
Cargo Cover 2-42
Cargo Tie Downs 2-42
CD, MP3 3-58
Center Console Storage Area 2-39
Center High-Mounted Stoplamp (CHMSL) 5-45
Chains, Tire 5-68
Charging System Light 3-32
Check
Engine Light 3-36
Checking Things Under the Hood 5-10
Chemical Paint Spotting 5-88
Child Restraints
Child Restraint Systems 1-33
Infants and Young Children 1-30
Lower Anchors and Tethers for Children 1-37
Older Children 1-27
Securing a Child Restraint in a
Rear Seat Position 1-44

Downloaded from www.Manualslib.com manuals search engine

Child Restraints (cont.)
Securing a Child Restraint in the Right Front Seat Position 1-46
Where to Put the Restraint 1-36
Cigarette Lighter 3-19
Cleaning
Aluminum Wheels 5-87
Exterior Lamps/Lenses 5-86
Fabric/Carpet 5-83
Finish Care 5-86
Instrument Panel, Vinyl, and Other Plastic Surfaces 5-84
Interior 5-82
Leather 5-84
Tires 5-88
Underbody Maintenance 5-88
Washing Your Vehicle 5-85
Weatherstrips 5-85
Windshield, Backglass, and Wiper Blades 5-87
Climate Control System 3-20
Air Filter, Passenger Compartment 3-23
Outlet Adjustment 3-22
Clock 3-43
Clutch, Hydraulic 5-22
Coinholder(s) 2-39
Collision Damage Repair 7-11
Compact Spare Tire 5-81
Content Theft-Deterrent 2-16
Control of a Vehicle 4-3
Coolant
Engine Temperature Gage 3-35
Heater, Engine 2-22
Cooling System 5-28
Cruise Control 3-11
Cruise Control Light 3-39
Cupholder(s) 2-39
Customer Assistance Information
Courtesy Transportation 7-9
Customer Assistance for Text Telephone (TTY) Users 7-5
Customer Assistance Offices 7-5
Customer Satisfaction Procedure 7-2
GM Mobility Reimbursement Program 7-6
Reporting Safety Defects to General Motors 7-14
Reporting Safety Defects to the Canadian Government 7-14
Reporting Safety Defects to the United States Government 7-14
Roadside Assistance Program 7-6
Service Publications Ordering Information 7-15

Downloaded from www.Manualslib.com manuals search engine

D

Daytime Running Lamps 3-15
Defensive Driving 4-2
Disc, MP3 3-58
Doing Your Own Service Work 5-4
Door
  Ajar Light 3-40
  Locks 2-7
  Power Door Locks 2-8
  Rear Door Security Locks 2-9
Driver
  Seat Height Adjuster 1-3
Driving
  At Night 4-12
  Before a Long Trip 4-13
  Defensive 4-2
  Drunken 4-2
  Highway Hypnosis 4-13
  Hill and Mountain Roads 4-14
  In Rain and on Wet Roads 4-12
  Rocking Your Vehicle to Get it Out 4-19
  Winter 4-15

E

EDR 7-16
Electrical System
  Add-On Equipment 5-90
  Engine Compartment Fuse Block 5-93
  Fuses and Circuit Breakers 5-91
  Headlamp Wiring 5-91
  Instrument Panel Fuse Block 5-92
  Power Windows and Other Power Options 5-91
  Windshield Wiper Fuses 5-91
Engine
  Air Cleaner/Filter 5-17
  Check and Service Engine Soon Light 3-36
  Coolant 5-23
  Coolant Heater 2-22
  Coolant Temperature Gage 3-35
  Cooling System Inspection 6-18
  Drive Belt Routing 5-97
  Engine Compartment Overview 5-12
  Exhaust 2-32
  Oil 5-13
  Overheating 5-26
  Running While Parked 2-32
  Starting 2-20
Entry Lighting 3-17
Event Data Recorders 7-16
Extender, Safety Belt 1-26
Exterior Lamps 3-14

Downloaded from www.Manualslib.com manuals search engine

F

Filter
  Engine Air Cleaner 5-17
Finish Damage 5-88
Fixed Mast Antenna 3-64
Flashers, Hazard Warning 3-6
Flash-to-Pass 3-8
Flat Tire 5-69
Flat Tire, Changing 5-70
Flat Tire, Storing 5-79
Floor Mats 2-39
Fluid 5-19, 5-21
  Power Steering 5-33
  Windshield Washer 5-34
Fog Lamp
  Fog 3-16
Folding Seatback, Passenger 1-6
Fuel 5-5
  Additives 5-6
  California Fuel 5-5
  Filling a Portable Fuel Container 5-9
  Filling the Tank 5-7
  Fuels in Foreign Countries 5-6
  Gage 3-41
Fuel (cont.)
  Gasoline Octane 5-5
  Gasoline Specifications 5-5
  Low Warning Light 3-42
  System Inspection 6-18
Fuses
  Engine Compartment Fuse Block 5-93
  Fuses and Circuit Breakers 5-91
  Instrument Panel Fuse Block 5-92
  Windshield Wiper 5-91

G

Gage
  Engine Coolant Temperature 3-35
  Fuel 3-41
  Speedometer 3-27
  Tachometer 3-28
Gasoline
  Octane 5-5
  Specifications 5-5
Glove Box 2-39
GM Mobility Reimbursement Program 7-6

Downloaded from www.Manualslib.com manuals search engine

H

Hazard Warning Flashers 3-6
Head Restraints 1-5
Headlamp
  Aiming 5-42
Headlamp Wiring 5-91
Headlamps
  Bulb Replacement 5-43
  Daytime Running Lamps 3-15
  Exterior Lamps 3-14
  Flash-to-Pass 3-8
  Halogen Bulbs 5-43
  Headlamps, Front Turn Signal,
    and Parking Lamps 5-43
  High/Low Beam Changer 3-8
  On Reminder 3-15
Heater 3-20
Height Adjuster, Driver Seat 1-3
Highbeam On Light 3-40
Highway Hypnosis 4-13
Hill and Mountain Roads 4-14
Hood
  Checking Things Under 5-10
  Release 5-10
Horn 3-6
How to Wear Safety Belts Properly 1-15
Hydraulic Clutch 5-22

I

Ignition Positions 2-19
Immobilizer 2-14
Immobilizer Operation 2-15
Infants and Young Children, Restraints 1-30
Inflation - Tire Pressure 5-55
Inspection
  Brake System 6-18
  Engine Cooling System 6-18
  Exhaust System 6-17
  Fuel System 6-18
  Part C - Periodic Maintenance 6-17
  Steering, Suspension and Front
    Drive Axle Boot and Seal 6-17
  Throttle System 6-18
Instrument Panel
  Overview 3-4
  Storage Area 2-39
Instrument Panel (I/P)
  Brightness 3-16
  Cluster 3-26
Interior Lamps
  Control 3-17

Downloaded from www.Manualslib.com manuals search engine

J

Jump Starting 5-38

K

Keyless Entry System 2-3
Keys 2-2

L

Labeling, Tire Sidewall 5-50
Lamps
  Reading 3-17
Lap-Shoulder Belt 1-23
LATCH System
  Child Restraints 1-37
Liftgate/Liftglass 2-10
Liftglass/Liftgate 2-10
Light
  Airbag Readiness 3-29
  Antilock Brake System Warning 3-33
  Brake System Warning 3-32
  Charging System 3-32
  Cruise Control 3-39
  Door Ajar 3-40
  Highbeam On 3-40
  Lights On Reminder 3-39
Light (cont.)
  Low Fuel Warning 3-42
  Low Tire Pressure Warning Light 3-34
  Low Washer Fluid Warning 3-40
  Malfunction Indicator 3-36
  Oil Pressure 3-38
  Overdrive Off 3-39
  Passenger Airbag Status Indicator 3-30
  Safety Belt Reminders 3-28
  StabiliTrak® Indicator 3-35
  Taillamp Indicator 3-39
  TCS Warning Light 3-34
  Traction Control System (TCS) Warning 3-34
Lighting
  Entry 3-17
Lights
  Exterior Lamps 3-14
  Flash-to-Pass 3-8
  High/Low Beam Changer 3-8
  On Reminder 3-15
Loading Your Vehicle 4-19
Locks
  Door 2-7
  Power Door 2-8
  Rear Door Security Locks 2-9
Loss of Control 4-10
Low Fuel Warning Light 3-42
Low Washer Fluid Warning Light 3-40
Luggage Carrier 2-40

Downloaded from www.Manualslib.com manuals search engine

M

Maintenance, Replacement Parts 5-96
Maintenance Schedule
At Each Fuel Fill 6-12
At Least Once a Month 6-13
At Least Once a Year 6-14
At Least Twice a Year 6-13
Brake System Inspection 6-18
Engine Cooling System Inspection 6-18
Exhaust System Inspection 6-17
Fuel System Inspection 6-18
How This Section is Organized 6-3
Introduction 6-2
Maintenance Requirements 6-2
Part A - Scheduled Maintenance Services 6-4
Part B - Owner Checks and Services 6-12
Part C - Periodic Maintenance Inspections 6-17
Part D - Recommended Fluids and Lubricants 6-19
Part E - Maintenance Record 6-21
Scheduled Maintenance 6-4
Steering, Suspension and Front Drive Axle Boot and Seal Inspection 6-17
Maintenance Schedule (cont.)
Throttle System Inspection 6-18
Using 6-4
Your Vehicle and the Environment 6-2
Malfunction Indicator Light 3-36
Manual Seats 1-2
Manual Transmission
Fluid 5-21
Operation 2-26
Manual, Using iii
Manual Windows 2-12
Mirrors
Automatic Dimming Rearview 2-34
Manual Rearview Mirror 2-33
Manual Rearview Mirror with OnStar® 2-33
Outside Convex Mirror 2-35
Outside Remote Control Mirrors 2-34
MP3 3-58
MyGMLink.com 7-4

N

Navigation System, Privacy 7-17
New Vehicle Break-In 2-18

Downloaded from www.Manualslib.com manuals search engine

O

Odometer 3-27
Odometers, Trip 3-27
Off-Road Recovery 4-10
Oil
  Engine 5-13
  Pressure Light 3-38
Older Children, Restraints 1-27
Online Owner Center 7-4
OnStar, Privacy 7-17
OnStar® System, see OnStar® Manual 2-35
Other Warning Devices 3-6
Outlet Adjustment 3-22
Outlets
  Accessory Power 3-18
Outside
  Convex Mirror 2-35
  Remote Controls Mirrors 2-34
Overdrive Off 2-25
Overdrive Off Light 3-39
Owners, Canadian ii

P

Paint, Damage 5-88
Panic Brake Assist 4-7
Park Brake 2-27
Park (P)
  Shifting Into 2-28
  Shifting Out of 2-30
Parking
  Over Things That Burn 2-31
Parking Your Vehicle 2-31
Part A - Scheduled Maintenance Services 6-4
Part B - Owner Checks and Services 6-12
Part C - Periodic Maintenance Inspections 6-17
Part D - Recommended Fluids and Lubricants 6-19
Part E - Maintenance Record 6-21
Passenger Airbag Status Indicator 3-30
Passenger Compartment Air Filter 3-23
Passenger Sensing System 1-59
Passing 4-10
Perchlorate Materials Requirements,
  California 5-4

Downloaded from www.Manualslib.com manuals search engine

Power
Door Locks 2-8
Electrical System 5-91
Outlet 115 Volt Alternating Current 3-18
Steering Fluid 5-33
Windows 2-13
Privacy 7-16
Event Data Recorders 7-16
Navigation System 7-17
OnStar 7-17
Radio Frequency Identification 7-17

R

Radiator Pressure Cap 5-26
Radio Frequency Identification (RFID), Privacy 7-17
Radios 3-42
Radio(s) 3-44
Radios
Reception 3-63
Setting the Time 3-43
Reading Lamps 3-17
Rear Cargo Accessory Track System 2-42
Rear Door Security Locks 2-9
Rear Seat Operation 1-8
Rear Storage Area 2-41
Rear Windshield Washer/Wiper 3-10
Rearview Mirror, Automatic Dimming 2-34
Rearview Mirror with OnStar® 2-33
Rearview Mirrors 2-33
Reclining Seatbacks 1-3
Recreational Vehicle Towing 4-25
Remote Keyless Entry (RKE) System 2-3
Remote Keyless Entry (RKE) System,
Operation 2-4
Removing the Flat Tire and Installing
the Spare Tire 5-73
Removing the Spare Tire and Tools 5-71
Replacement Bulbs 5-48
Replacement Parts, Maintenance 5-96
Reporting Safety Defects
Canadian Government 7-14
General Motors 7-14
United States Government 7-14
Restraint System Check
Checking the Restraint Systems 1-66
Replacing Restraint System Parts
After a Crash 1-67
Roadside
Assistance Program 7-6
Rocking Your Vehicle to Get it Out 4-19
Routing, Engine Drive Belt 5-97
Running the Engine While Parked 2-32

Downloaded from www.Manualslib.com manuals search engine

S

Safety Belt
  Reminder Light 3-28
Safety Belts
  Care of 5-85
  How to Wear Safety Belts Properly 1-15
  Lap-Shoulder Belt 1-23
  Safety Belt Extender 1-26
  Safety Belt Use During Pregnancy 1-26
  Safety Belts Are for Everyone 1-10
Safety Warnings and Symbols iii
Scheduled Maintenance 6-4
Seatback, Folding Passenger 1-6
Seats
  Driver Seat Height Adjuster 1-3
  Head Restraints 1-5
  Passenger Folding Seatback 1-6
  Rear Seat Operation 1-8
  Reclining Seatbacks 1-3
Securing a Child Restraint
  Rear Seat Position 1-44
  Right Front Seat Position 1-46
Service 5-3
  Accessories and Modifications 5-3
  Adding Equipment to the Outside
    of Your Vehicle 5-5
  California Pershlorate Materials
    Requirements 5-4
  California Proposition 65 Warning 5-3
  Doing Your Own Work 5-4
  Engine Soon Light 3-36
  Publications Ordering Information 7-15
Service, Scheduling Appointments 7-9
Servicing Your Airbag-Equipped Vehicle 1-64
Sheet Metal Damage 5-88
Shifting Into Park (P) 2-28
Shifting Out of Park (P) 2-30
Signals, Turn and Lane-Change 3-8
Spare Tire
  Compact 5-81
  Installing 5-73
  Removing 5-71
  Storing 5-79
Specifications, Capacities 5-95
Speedometer 3-27

Downloaded from www.Manualslib.com manuals search engine

StabiliTrak® System 4-7
StabiliTrak® Indicator Light 3-35
Starting the Engine 2-20
Steering 4-8
Steering, Suspension and Front Drive
  Axle Boot and Seal Inspection 6-17
Steering Wheel, Tilt Wheel 3-7
Storage Areas
  Center Console Storage Area 2-39
  Coinholder(s) 2-39
  Cupholder(s) 2-39
  Glove Box 2-39
  Instrument Panel Storage Area 2-39
  Luggage Carrier 2-40
  Rear Cargo Accessory Track System 2-42
  Rear Storage Area 2-41
Stuck in Sand, Mud, Ice, or Snow 4-18
Sun Visors 2-14
Sunroof 2-43

T

Tachometer 3-28
Taillamp Indicator Light 3-39
Taillamps
  Turn Signal, and Stoplamps 5-46
TCS Warning Light 3-34
Theft-Deterrent Systems 2-14
  Content Theft-Deterrent 2-16
  Immobilizer 2-14
  Immobilizer Operation 2-15
Throttle System Inspection 6-18
Tilt Wheel 3-7
Time, Setting 3-43
Tires 5-49
  Aluminum Wheels, Cleaning 5-87
  Buying New Tires 5-63
  Chains 5-68
  Changing a Flat Tire 5-70
  Cleaning 5-88
  Compact Spare Tire 5-81

Downloaded from www.Manualslib.com manuals search engine

Tires (cont.)
Different Size 5-65
If a Tire Goes Flat 5-69
Inflation - Tire Pressure 5-55
Inspection and Rotation 5-61
Installing the Spare Tire 5-73
Pressure Monitor Operation 5-58
Pressure Monitor System 5-57
Removing the Flat Tire 5-73
Removing the Spare Tire and Tools 5-71
Storing a Flat or Spare Tire and Tools 5-79
Tire Sidewall Labeling 5-50
Tire Terminology and Definitions 5-52
Uniform Tire Quality Grading 5-65
Wheel Alignment and Tire Balance 5-67
Wheel Replacement 5-67
When It Is Time for New Tires 5-63
Towing
Recreational Vehicle 4-25
Towing a Trailer 4-27
Your Vehicle 4-25
Traction
Control System (TCS) 4-6
Control System Warning Light 3-34
StabiliTrak® System 4-7
Transmission
Fluid, Automatic 5-19
Fluid, Manual 5-21
Transmission Operation, Automatic 2-23
Transmission Operation, Manual 2-26
Trip Odometers 3-27
Turn and Lane-Change Signals 3-8
Turn Signal/Multifunction Lever 3-7

U

Uniform Tire Quality Grading 5-65
Using this Manual iii

Downloaded from www.Manualslib.com manuals search engine

V

Vehicle
Control 4-3
Damage Warnings iv
Loading 4-19
Parking Your 2-31
Symbols iv
Vehicle Data Recording and Privacy 7-16
Vehicle Identification
Number (VIN) 5-90
Service Parts Identification Label 5-90
Ventilation Adjustment 3-22
Visors 2-14

W

Warning Lights, Gages and Indicators 3-25
Warnings
Hazard Warning Flashers 3-6
Other Warning Devices 3-6
Safety and Symbols iii
Vehicle Damage iv
Washer Fluid, Low Warning Light 3-40
Wheels
Alignment and Tire Balance 5-67
Different Size 5-65
Replacement 5-67
Where to Put the Restraint 1-36
Windows 2-12
Manual 2-12
Power 2-13
Windshield
Backglass, and Wiper Blades, Cleaning 5-87
Washer 3-10
Washer Fluid 5-34
Wiper Blade Replacement 5-48
Wiper Fuses 5-91
Wipers 3-9
Windshield, Rear Washer/Wiper 3-10
Winter Driving 4-15

X

XM Radio Messages 3-63
XM™ Satellite Radio Antenna System 3-64

Y

Your Vehicle and the Environment 6-2

Downloaded from www.Manualslib.com manuals search engine