1. Basic Diagnostic Procedure

A: BASIC PROCEDURES

1. GENERAL DESCRIPTION

The most important purpose of diagnostics is to quickly determine which part is malfunctioning, to save time and labor.

2. IDENTIFICATION OF TROUBLE SYMPTOM

Determine what the problem is based on the symptom.

3. PROBABLE CAUSE OF TROUBLE

Look at the wiring diagram and check the system's circuit. Then check the switch, relay, fuse, ground, etc.

4. LOCATION AND REPAIR OF TROUBLE

1) Using the diagnostics, narrow down the causes.
2) If necessary, use a voltmeter, ohmmeter, etc.
3) Before replacing certain component parts (switch, relay, etc.), check the power supply, ground, for open wiring harness, poor connectors, etc. If no problem is encountered, check the component parts.

5. SYSTEM OPERATION CHECK

After repairing, ensure that the system operates properly.

B: BASIC INSPECTION

1. VOLTAGE MEASUREMENT

1) Using a voltmeter, connect the negative lead to a good ground point or negative battery terminal and the positive lead to the connector or component terminal.
2) Touch connector (A) with the positive probe of the volt meter. The voltmeter will indicate a voltage.
3) Touch connector (B) with the positive probe. The voltmeter will indicate no voltage.

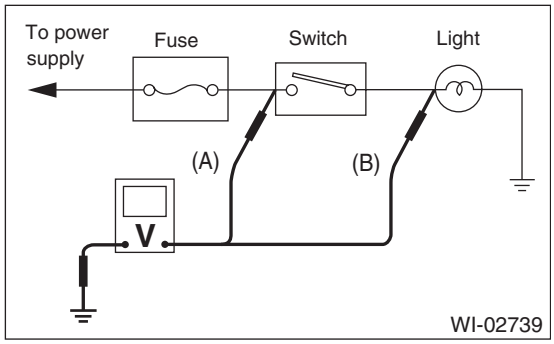

4) With the test set-up held as it is, turn the switch to ON. The voltmeter will indicate a voltage and, at the same time, the light will illuminate.
5) The circuit is in good order. If a problem such as a light failing to illuminate occurs, use the procedures outlined above to track down the malfunction.

2. CIRCUIT CONTINUITY CHECKS

1) Disconnect the battery terminal or connector so there is no voltage between the check points.
Contact the two leads of an ohmmeter to each of the check points.
If the circuit has diodes, reverse the two leads and check again.
2) Use an ohmmeter to check for diode continuity.
When contacting the negative lead to the diode positive side and the positive lead to the negative side, there should be continuity.
When contacting the two leads in reverse, there should be no continuity.

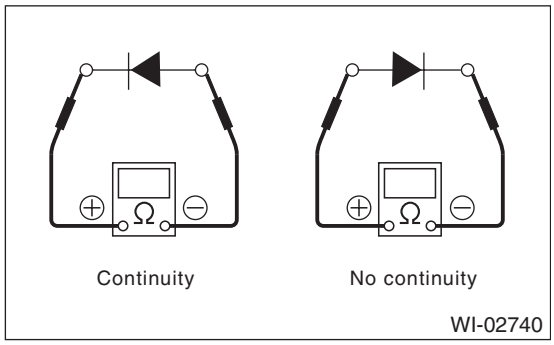

3) The symbol "❍ — ❍" indicates that continuity exists between two points or terminals. For example, when a switch position is at "3", continuity exists among terminals 1, 3 and 6, as shown in the table below.

Terminal / Switch Position	1	2	3	4	5	6
OFF						
1	❍				❍	❍
2	❍			❍		❍
3	❍		❍			❍
4	❍	❍				❍

WI-02741

3. HOW TO DETERMINE AN OPEN CIRCUIT

1) WITH VOLTMETER:

An open circuit is determined by measuring the voltage between respective connectors and ground using a voltmeter, starting with the connector closest to the power supply. The power supply must be turned ON so that current flows in the circuit. If voltage is not present between a particular connector and ground, the circuit between that connector and the previous connector is open.

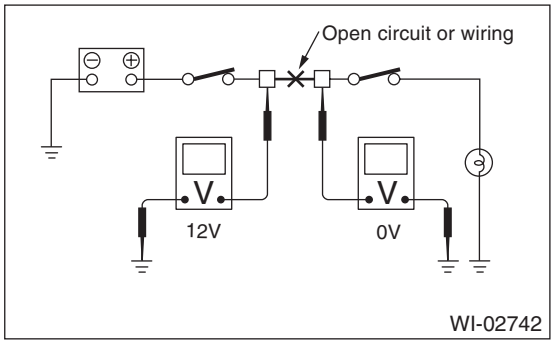

2) WITH OHMMETER:

Disconnect all connectors affected, and check continuity in the wiring between adjacent connectors. When the ohmmeter indicates "infinite", the wiring is open.

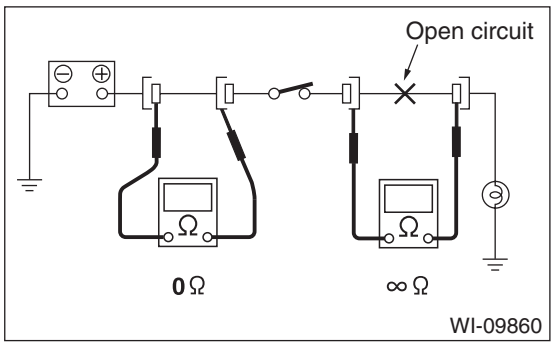

4. HOW TO DETERMINE A SHORT CIRCUIT

1) WITH TEST LIGHT:

Connect a test light (rated at approx. 3 watts) in place of the blown fuse and allow current to flow through the circuit. Disconnect one connector at a time from the circuit. Starting with the one located farthest from the power supply. If the test light goes out when a connector is disconnected, the wiring between that connector and the next connector (farther from the power supply) is shorted.

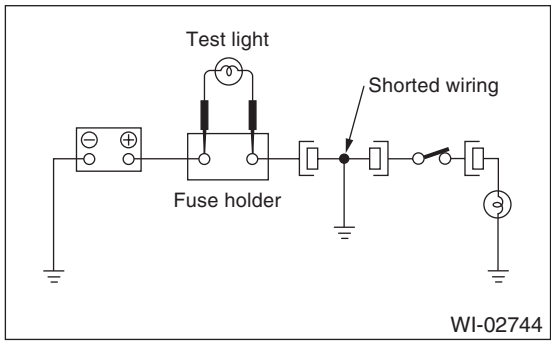

2) WITH OHMMETER:

Disconnect all affected connectors, and check continuity between each connector and ground. When the ohmmeter indicates continuity between a particular connector and a ground, that connector is shorted.

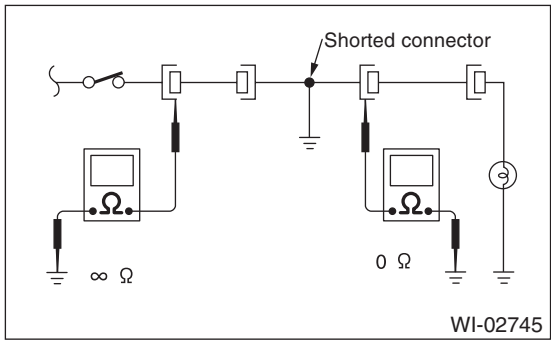

C: HOW TO READ WIRING DIAGRAMS

1. WIRING DIAGRAM:

The wiring diagram of each system is illustrated so that you can understand the path through which the electric current flows from the battery.
Sketches and codes are used in the diagrams. They should read as follows:

- Each connector and its terminal position are indicated by a sketch of the connector in a disconnected state which is viewed from the front.

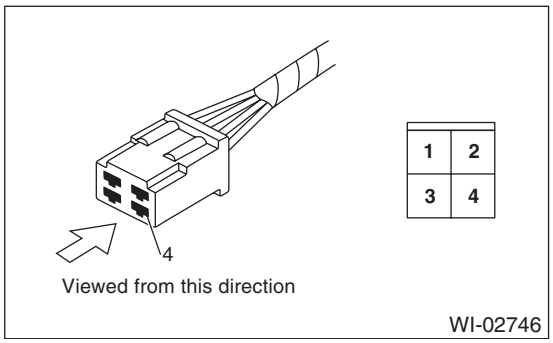

- The number of poles or pins, presence of a lock are indicated in the sketch of each connector. In the sketch, the highest pole number refers to the number of poles which the connector has. For example, the sketch of the connector shown in figure indicates the connector has 9 poles.

Connector used in vehicle	Connector shown in wiring diagram		
	Sketch	Symbol	Number of poles
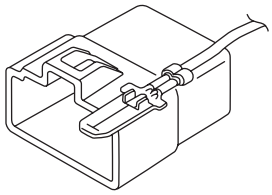	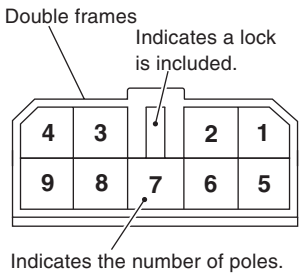	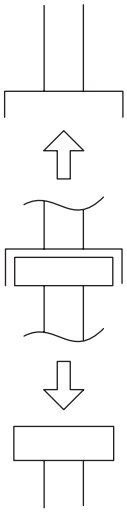	Numbered in order from upper right to lower left.
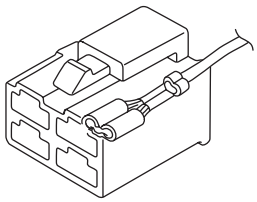	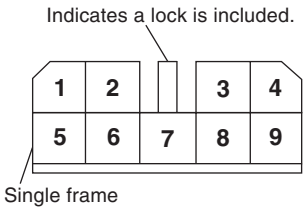		Numbered in order from upper left to lower right.

WI-02747

• When one set of connectors is viewed from the front side, the pole numbers of one connector are symmetrical to those of the other. When these two connectors are connected as a unit, the poles which have the same number are joined.

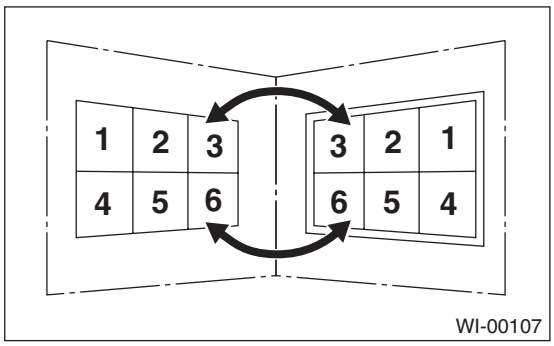

• WIRING DIAGRAM:
The connectors are numbered along with the number of poles, external colors, and mating connections in the accompanying list.
• The sketch of each connector in the wiring diagram usually shows the (A) side of the connector. The relationship between the wire color, terminal number and connector is described in the figure.

NOTE:
A wire which runs in one direction from a connector terminal sometimes may have a different color from that which runs in the other direction from that terminal.

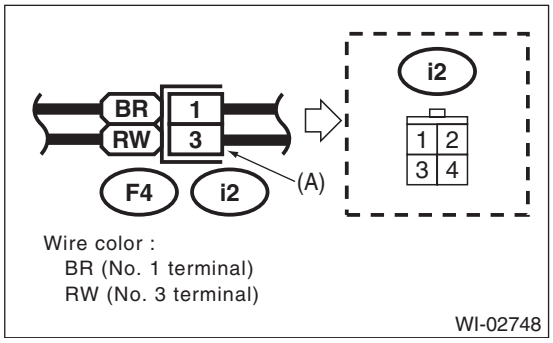

• In the wiring diagram, connectors which have no terminal number refer to one-pole types. Sketches of these connectors are omitted intentionally.

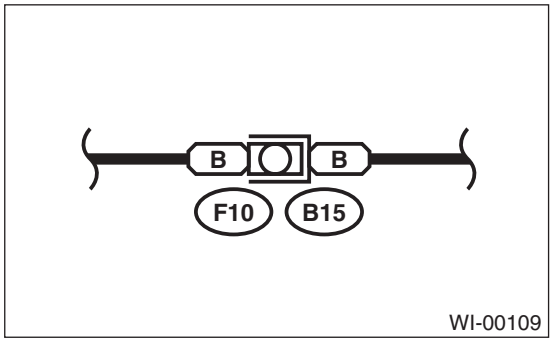

• The following color codes are used to indicate the colors of the wires.

Color code	Color
L	Blue
B	Black
Y	Yellow
G	Green
R	Red
W	White
Br	Brown
Lg	Light green
Gr	Gray
P	Pink
Or	Orange
Sb	Light blue
V	Violet
SA	Sealed (Inner)
SB	Sealed (Outer)

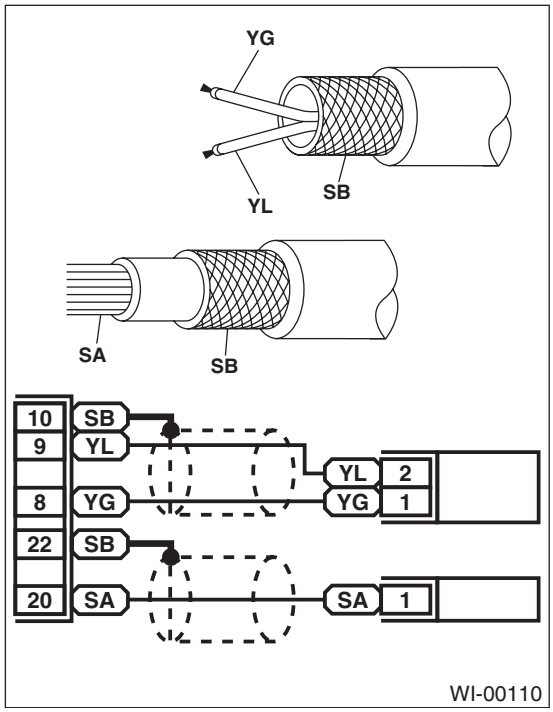

- The wire color code, which consists of two letters (or three letters including Br or Lg), indicates the standard color (base color of the wire covering) by its first letter and the stripe marking by its second letter.

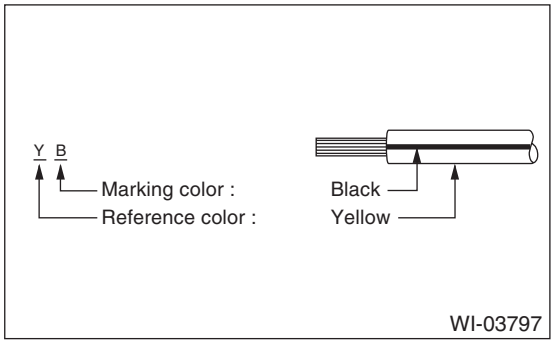

- The table lists the nominal sectional areas and allowable currents of the wires.

CAUTION:
When replacing or repairing a wire, be sure to use the same size and type of the wire which was originally used.

NOTE:
- The allowable current in the table indicates the tolerable amperage of each wire at an ambient temperature of 40°C (104°F).
- The allowable current changes with ambient temperature. Also, it changes if a bundle of more than two wires is used.

Nominal sectional area mm^2	No. of strands/ strand diameter	Outside diameter of wiring mm	Allowable current Amps/ 40°C (104°F)
0.3	7/0.26	1.8	7
0.5	7/0.32	2.2 (or 2.0)	12
0.75	30/0.18	2.6 (or 2.4)	16
0.85	11/0.32	2.4 (or 2.2)	16
1.25	16/0.32	2.7 (or 2.5)	21
2	26/0.32	3.1 (or 2.9)	28
3	41/0.32	3.8 (or 3.6)	38
5	65/0.32	4.6 (or 4.4)	51
8	50/0.45	5.5	67

- Each unit is either directly grounded to the body or indirectly grounds through a harness ground terminal. Different symbols are used in the wiring diagram to identify the two grounding systems.

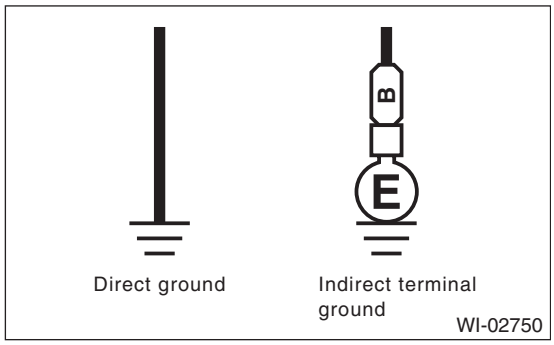

- The ground points shown in the wiring diagram refer to the following:

NOTE:
All wiring harnesses are provided with a ground point which must be securely connected.

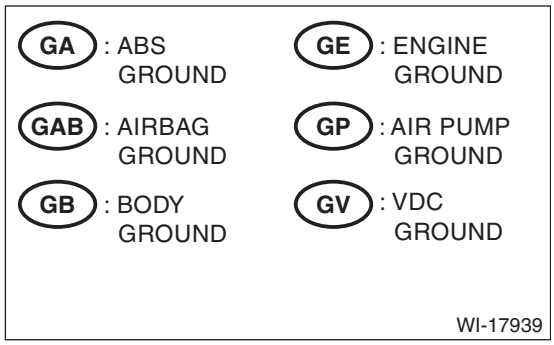

- Relays are classified as normally-open or normally-closed.

The normally-closed relay has one or more contacts. The wiring diagram shows the relay mode when the energizing circuit is OFF.

Relay type		Energizing circuit OFF	Energizing circuit ON
Normally-open type	4-pole	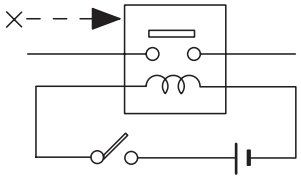	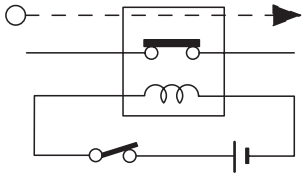
	6-pole	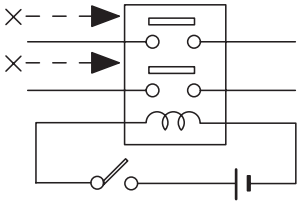	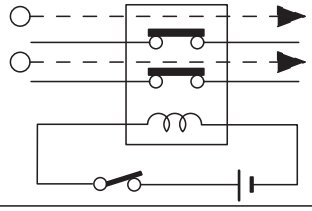
Normally-closed type	4-pole	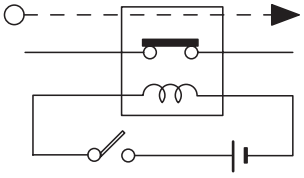	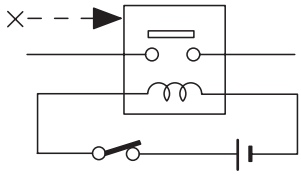
Mixed type	6-pole	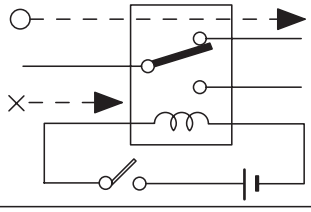	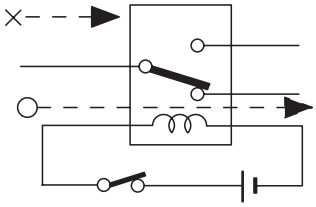

Key to symbols:

○ ⟶ : Current flows.

× ⟶ : Current does not flow.

WI-16724

- Each connector number shown in the wiring diagram corresponds to that in the wiring harness. The location of each connector in the actual vehicle is determined by reading the first character of the connector (for example, a “F” for F8, “i” for i16, etc.) and the type of wiring harness. The first character of each connector number corresponds to the area or system of the vehicle.

Symbol	Wiring harness and cord
F	Front wiring harness
B	Bulkhead wiring harness
E	Engine wiring harness
T	Transmission cord
D	Door cord LH & RH, Rear gate cord Rear door cord LH & RH, Rear defogger cord
i	Instrument panel wiring harness
R	Rear wiring harness, Fuel tank cord, Roof cord, Rear gate cord
AB	Airbag wiring harness

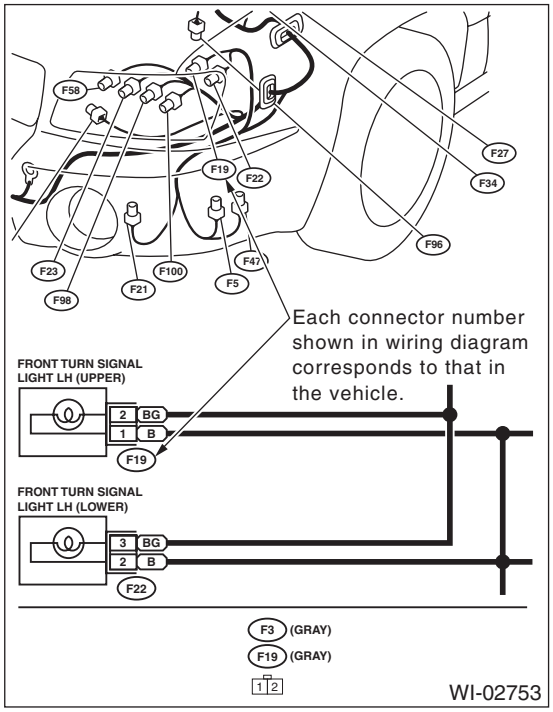

D: SYMBOLS IN WIRING DIAGRAMS

A number of symbols are used in each wiring diagram to easily identify parts or circuits.

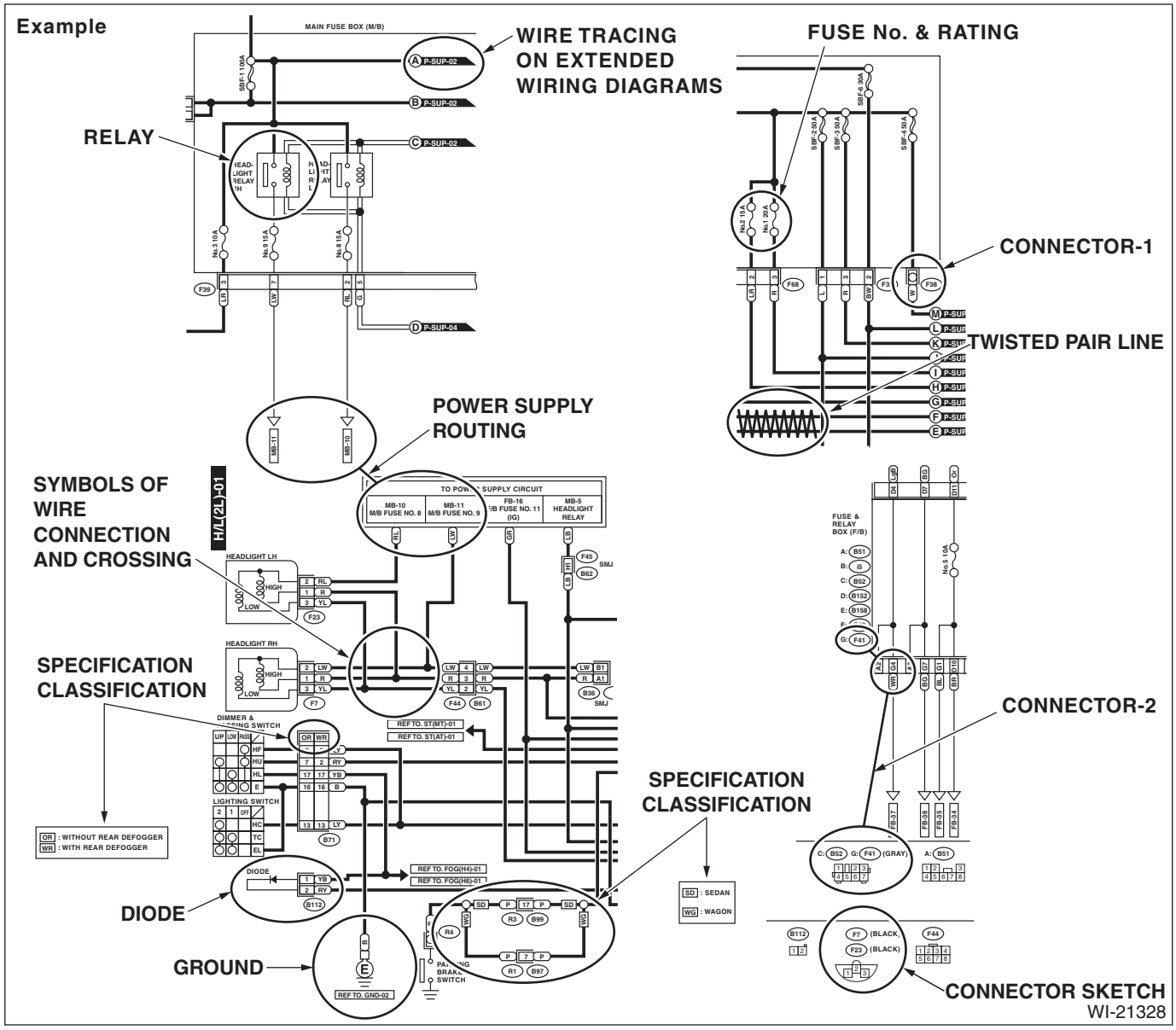

1. RELAY

A symbol used to indicate a relay.

2. CONNECTOR 1

The sketch of the connector indicates the one-pole types.

3. WIRING CONNECTION

Some wiring diagrams are indicated in foldouts for convenience. Wiring destinations are indicated where necessary by corresponding symbols. (When two pages are needed for clear indication)

4. FUSE NO. & RATING

The “FUSE No. & RATING” corresponds with that used in the fuse box (main fuse box, fuse and joint box).

5. CONNECTOR 2

- Each connector is indicated by a symbol.
- Each terminal number is indicated in the corresponding wiring diagram in an abbreviated form.
- For example, terminal number “G4” refers to No. 4 terminal of connector (G: F41) shown in the connector sketch.

6. CONNECTOR SKETCH

- Each connector sketch clearly identifies the shape and color of a connector as well as terminal locations. Non-colored connectors are indicated in natural color.
- When more than two types of connector number are indicated in a connector sketch, it means that the same type connectors are used.

7. GROUND

Each grounding point can be located easily by referring to the corresponding wiring harness.

8. DIODE

A symbol is used to indicate a diode.

9. WIRE TRACING ON EXTENDED WIRING DIAGRAMS

For a wiring diagram extending over at least two pages, a symbol (consisting of the same characters with arrows), facilitates wire tracing from one page to the next.

A ←→ A, B ←→ B

10.SYMBOLS OF WIRE CONNECTION AND CROSSING

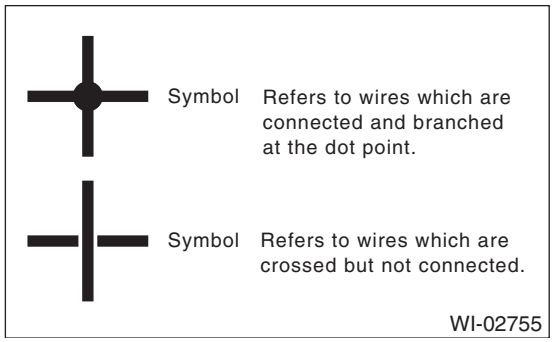

11.POWER SUPPLY CIRCUIT

A symbol is used to indicate the power supply in each wiring diagram.

“MB – 5”, “MB – 6”, etc., which are used as power-supply symbols throughout the text, correspond with those shown in the “DC POWER SUPPLY CIRCUIT” in the wiring diagram.

Accordingly, using the “DC POWER SUPPLY CIRCUIT” and wiring diagrams permits service personnel to understand the entire electrical arrangement of a system.

12.CLASSIFICATION BY SPECIFICATION

When the wiring diagram differ according to vehicle specifications, the specification difference is described by using abbreviations.

13.TWISTED PAIR LINE

The twisted pair line is indicated by a symbol in the wiring diagrams.

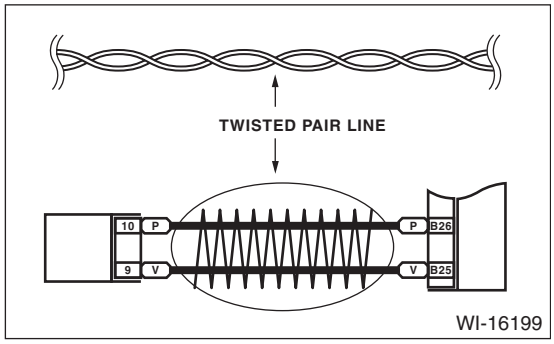

E: CONNECTOR SYMBOL IN WIRING HARNESS

A number of connector symbols are used in each wiring diagram to easily identify the wiring harness connectors.

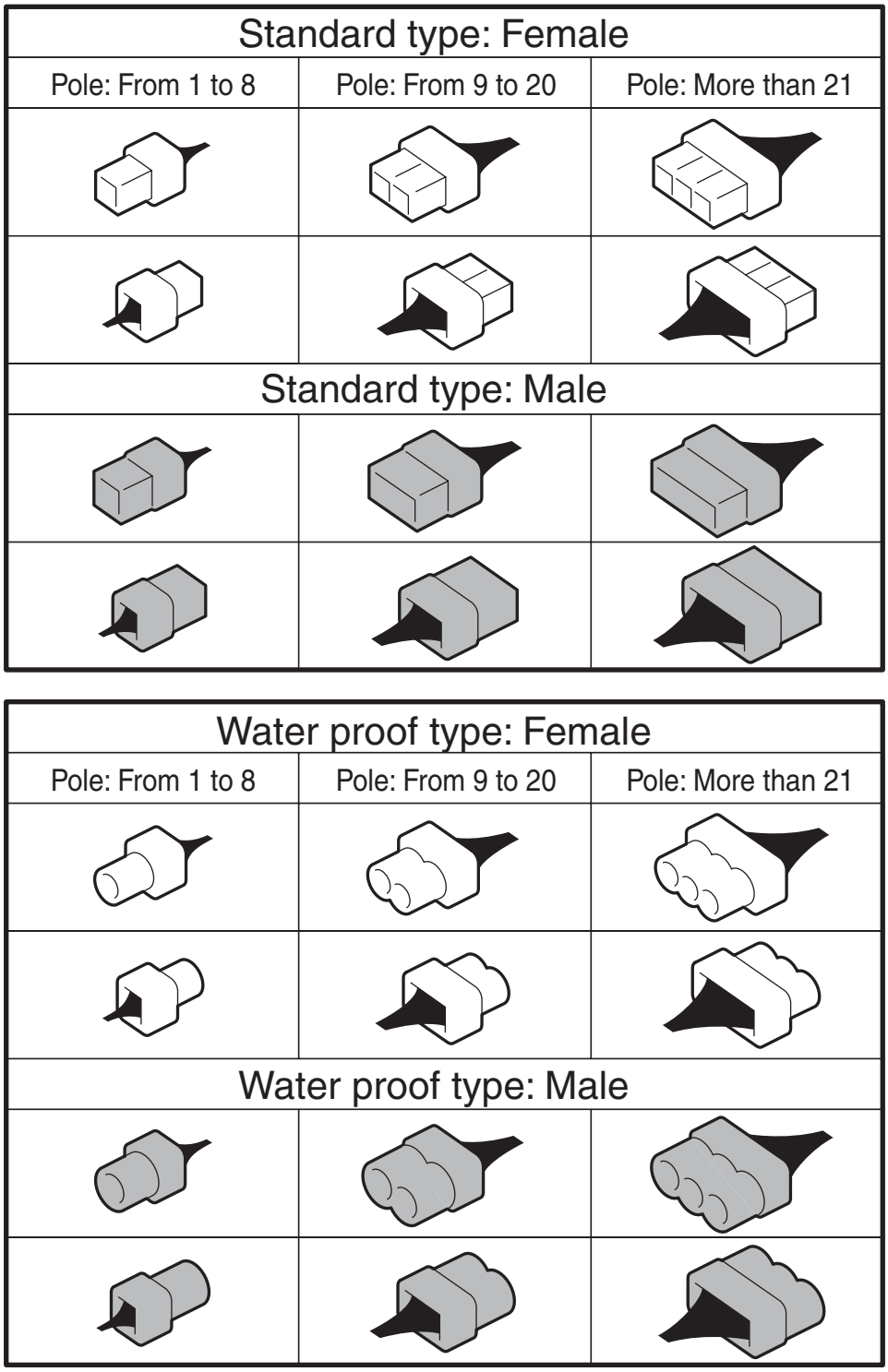

WI-02756

F: ABBREVIATION IN WIRING DIAGRAMS

Abbr.	Full name
ABS	Anti-lock Brake System
ACC	Accessory
A/C	Air Conditioner
ASSY	Assembly
AT	Automatic Transmission
A/F	Air/Fuel (Air fuel ratio sensor)
ATF	Automatic Transmission Fluid
AUX	Auxiliary Audio Input Terminal
AWD	All Wheel Drive
B	Battery
CAN	Controller Area Network
D	Drive range or Down
DN	Down
E	Ground
ECM	Engine Control Module
EEPROM	Electrically Erasable Programmable Read-Only Memory
EGR	Exhaust Gas Recirculation
F/B	Fuse & Relay Box
FL	Front Left
FR	Front Right
FWD	Front Wheel Drive
G	Gravity (G sensor)
H/L	Headlight
HI	High
I/F	Interface
IG	Ignition
Illumi	Illumination
INT	Intermittent
LCD	Liquid Crystal Display
LH	Left Hand
LO	Low
M	Motor
M/B	Main Fuse Box
MT	Manual Transmission
N	Neutral Range
NA	Natural Aspiration
NAVI	Navigation
OP	Open or Optional Parts
P	Parking Range
PASS	Passing
PCV	Positive Crankcase Ventilation Valve
R	Reverse Range
RH	Right Hand
RL	Rear Left
RR	Rear Right
SBF	Slow Blow Fuse
ST	Starter

Abbr.	Full name
SW	Switch
TCM	Transmission Control Module
TPM	Tire Pressure Monitor
VDC	Vehicle Dynamics Control
VFD	Vacuum Fluorescent Display
WASH	Washer

2. Working Precautions

A: PRECAUTIONS WHEN WORKING WITH THE PARTS MOUNTED ON THE VEHICLE

1) When working under a vehicle which is jacked-up, always be sure to use rigid rack.
2) The parking brake must always be applied during working. Also, in automatic transmission vehicles, keep the select lever set to the P (Parking) range.
3) Be sure the workshop is properly ventilated when running the engine. Further, be careful not to touch the belt or fan while the engine is operating.
4) Be careful not to touch hot metal parts, especially the radiator and exhaust system immediately after the engine has been turned off.

B: PRECAUTIONS IN TROUBLE DIAGNOSIS AND REPAIR OF ELECTRIC PARTS

1) The battery cable must be disconnected from the battery's (–) terminal, and the ignition switch must be set to the OFF position, unless otherwise required by the diagnostics.
2) Securely fasten the wiring harness with clamps and clips so that the harness does not interfere with the body end parts, edges, bolts or screws.
3) When installing parts, be careful not to catch them on the wiring harness.
4) When disconnecting a connector, do not pull the wires, but pull while holding the connector body.

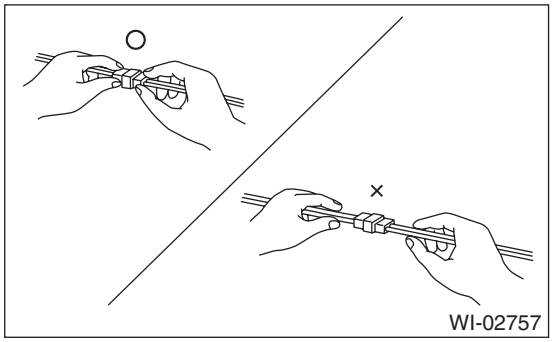

5) Some connectors are provided with a lock. One type of such a connector is disconnected by pushing the lock, and the other, by moving the lock up. In either type the lock shape must be identified before attempting to disconnect the connector.
To connect, insert the connector until it snaps and confirm that it is connected securely.

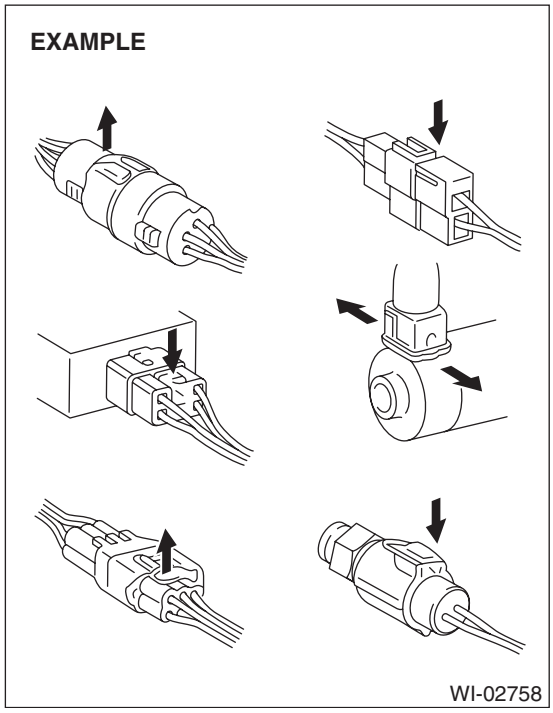

6) When checking continuity between connector terminals, or measuring voltage across the terminal and ground, always touch tester probe(s) to terminals from the wiring connection side. If the probe is too thick to gain access to the terminal, use "mini" test leads.
To check water-proof connectors (which are not measurable from the wiring side), touch test probes on the terminal side and be careful not to bend or damage the terminals.

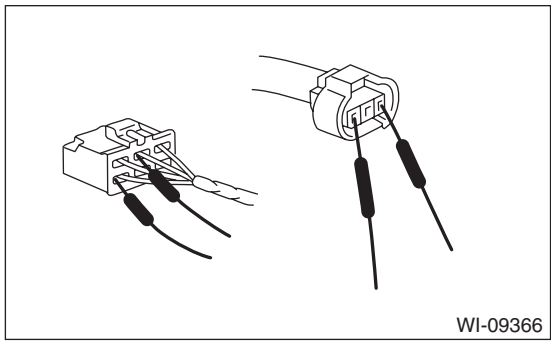

7) Sensors, relays, electrical unit, etc., are sensitive to strong impacts.
Handle them with care so that they are not dropped or mishandled.

3. Power Supply Circuit

A: WIRING DIAGRAM

P-SUP-01

P-SUP-01

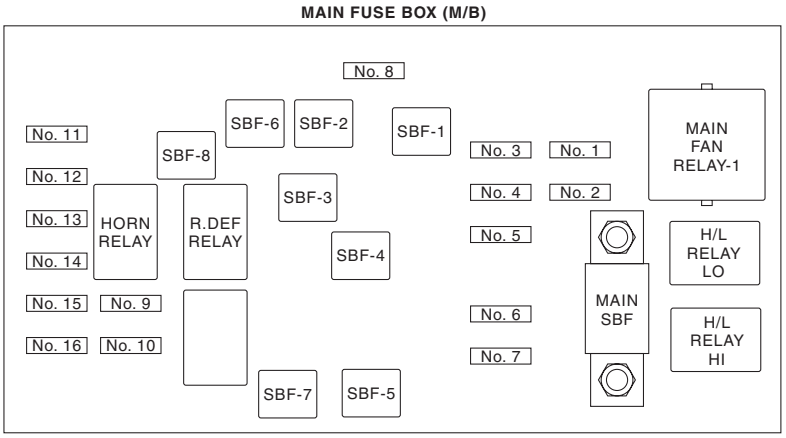

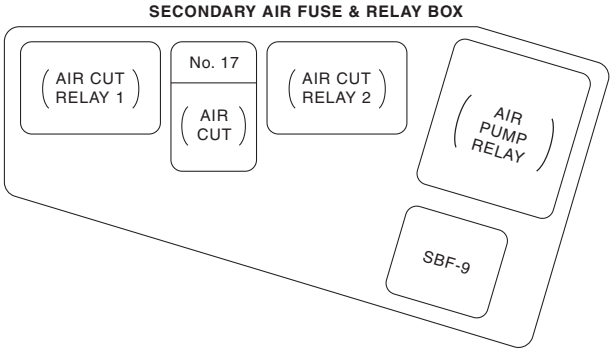

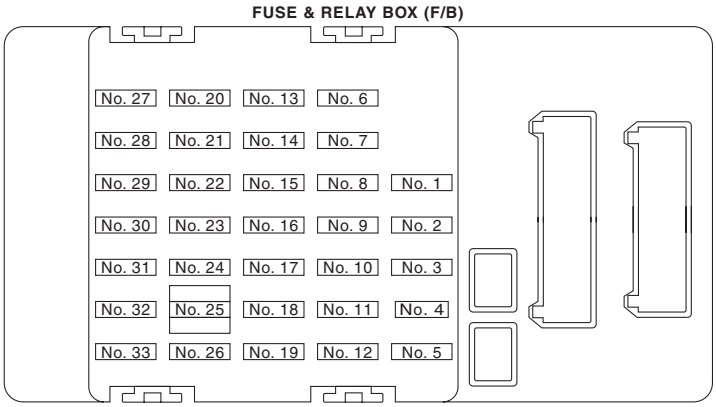

WI-19449

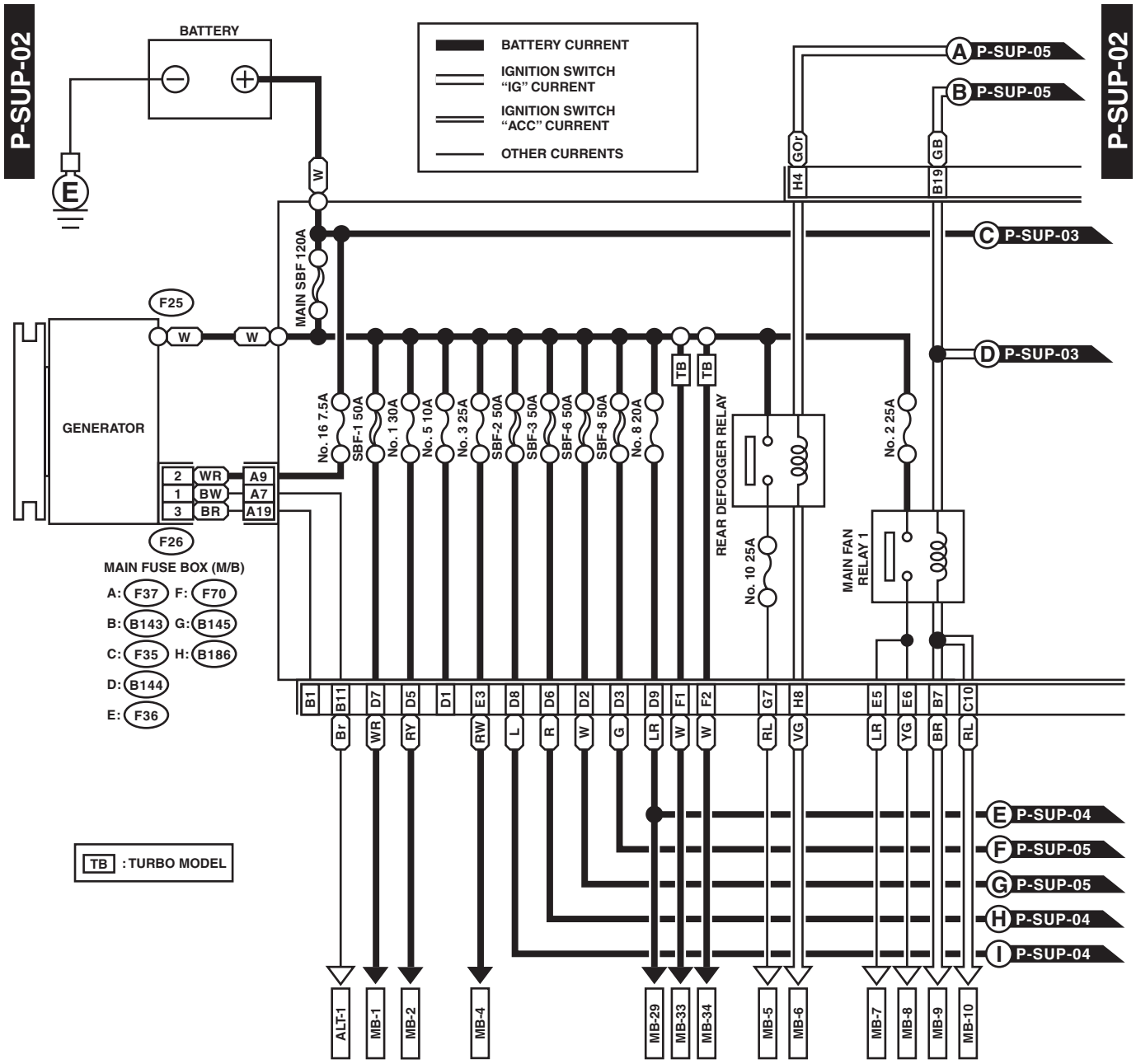
P-SUP-02
BATTERY
BATTERY CURRENT
IGNITION SWITCH "IG" CURRENT
IGNITION SWITCH "ACC" CURRENT
OTHER CURRENTS
A P-SUP-05
B P-SUP-05
C P-SUP-03
D P-SUP-03
E P-SUP-04
F P-SUP-05
G P-SUP-05
H P-SUP-04
I P-SUP-04
MAIN SBF 120A
GENERATOR
F25
F26
MAIN FUSE BOX (M/B)
A: F37 F: F70
B: B143 G: B145
C: F35 H: B186
D: B144
E: F36
No. 16 7.5A
SBF-1 50A
No. 1 30A
No. 5 10A
No. 3 25A
SBF-2 50A
SBF-3 50A
SBF-6 50A
SBF-8 50A
No. 8 20A
REAR DEFOGGER RELAY
No. 10 25A
No. 2 25A
MAIN FAN RELAY 1
TB : TURBO MODEL
ALT-1
MB-1
MB-2
MB-4
MB-29
MB-33
MB-34
MB-5
MB-6
MB-7
MB-8
MB-9
MB-10

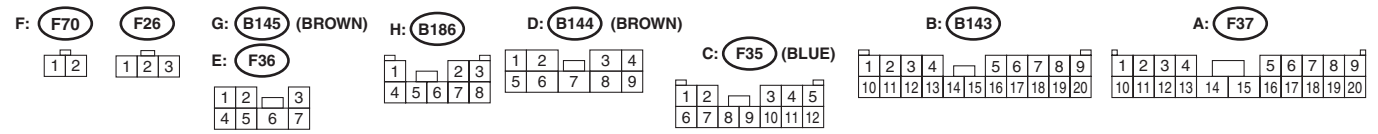
F: F70
F26
G: B145 (BROWN)
E: F36
H: B186
D: B144 (BROWN)
C: F35 (BLUE)
B: B143
A: F37

WI-21382

P-SUP-03

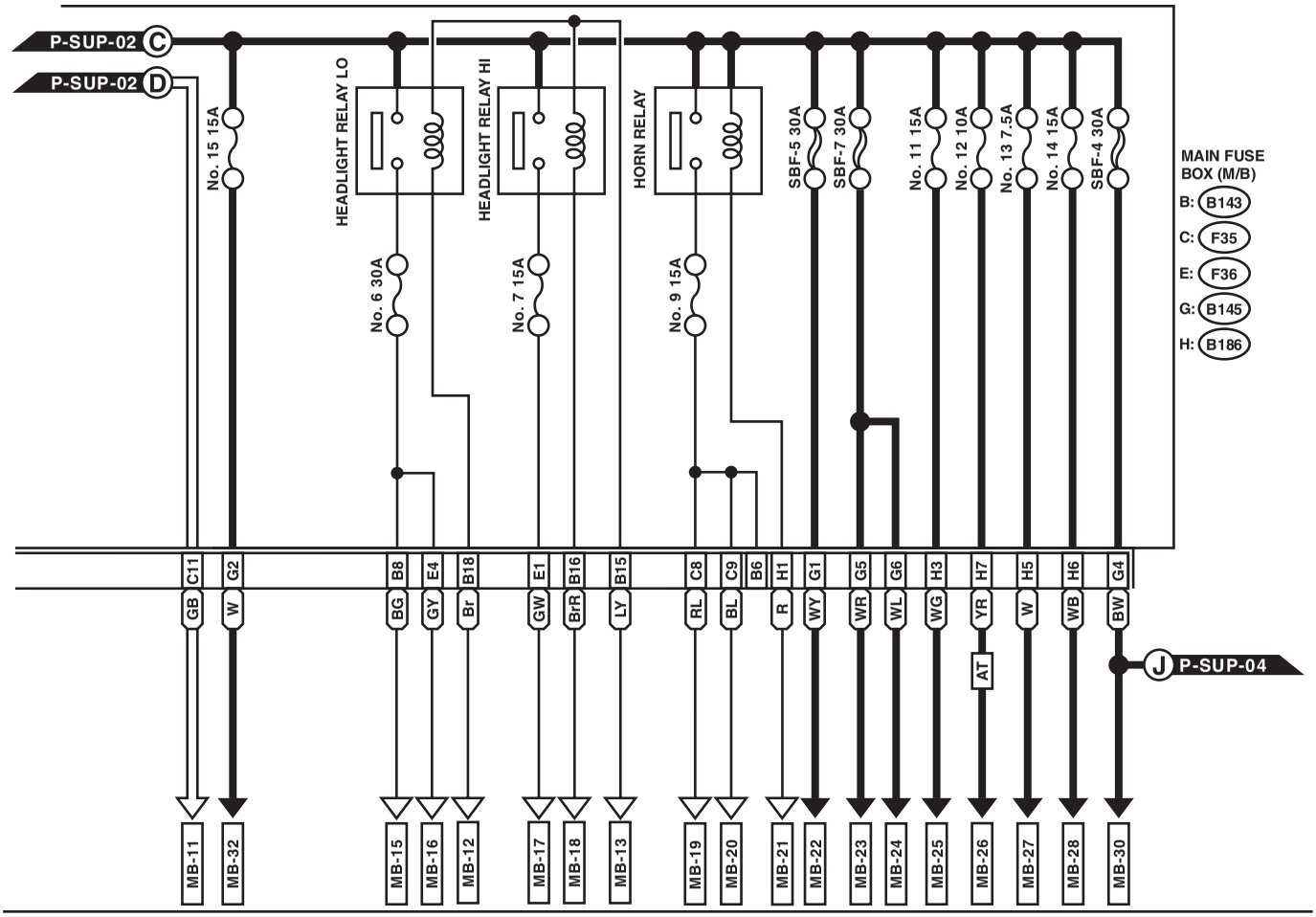

WI-22159

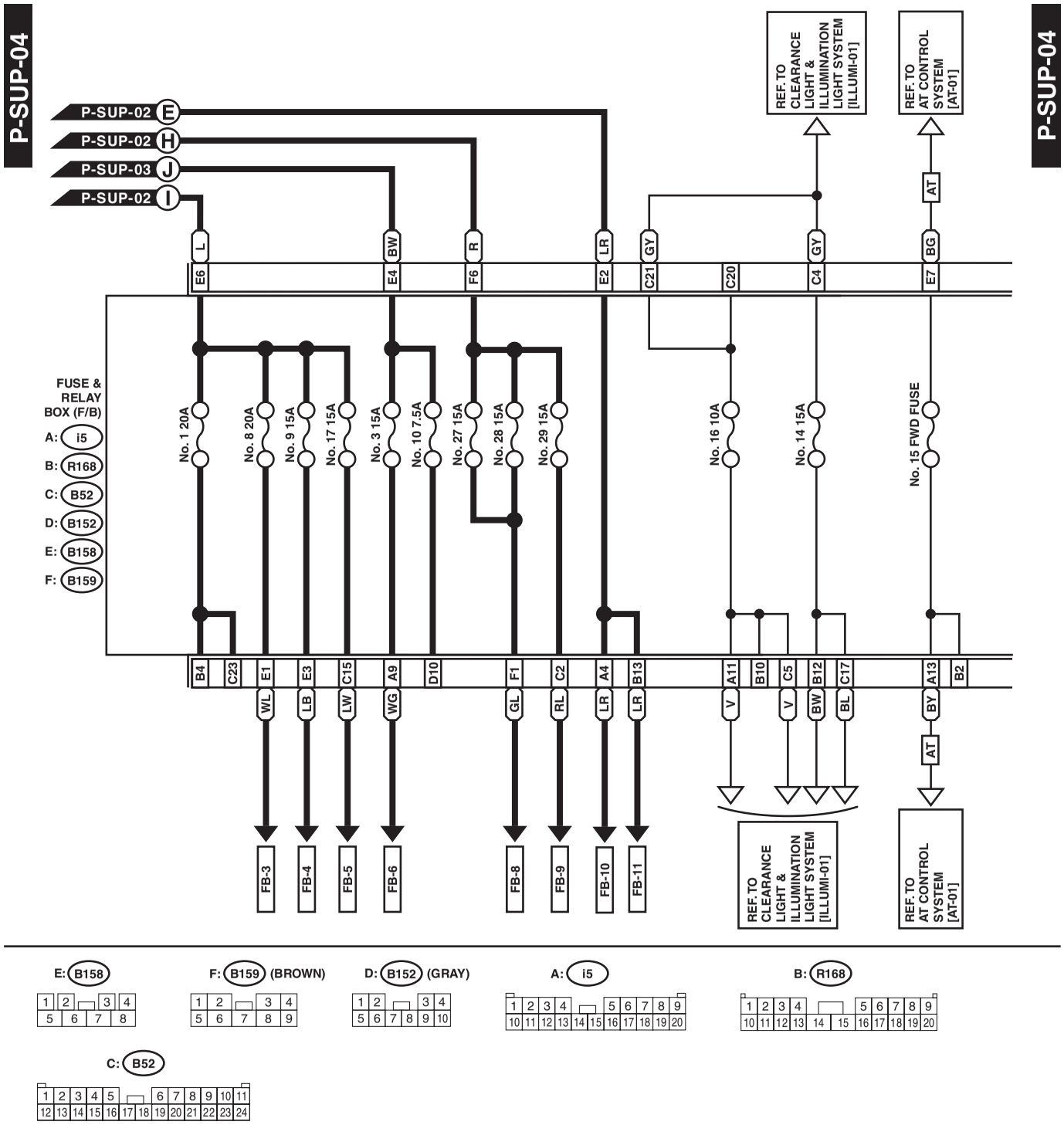
P-SUP-04
P-SUP-02 E
P-SUP-02 H
P-SUP-03 J
P-SUP-02 I
REF. TO CLEARANCE LIGHT & ILLUMINATION LIGHT SYSTEM [ILLUMI-01]
REF. TO AT CONTROL SYSTEM [AT-01]
FUSE & RELAY BOX (F/B)
A: i5
B: R168
C: B52
D: B152
E: B158
F: B159
No. 1 20A
No. 8 20A
No. 9 15A
No. 17 15A
No. 3 15A
No. 10 7.5A
No. 27 15A
No. 28 15A
No. 29 15A
No. 16 10A
No. 14 15A
No. 15 FWD FUSE
FB-3
FB-4
FB-5
FB-6
FB-8
FB-9
FB-10
FB-11

E: B158
F: B159 (BROWN)
D: B152 (GRAY)
A: i5
B: R168
C: B52

WI-21383

Power Supply Circuit

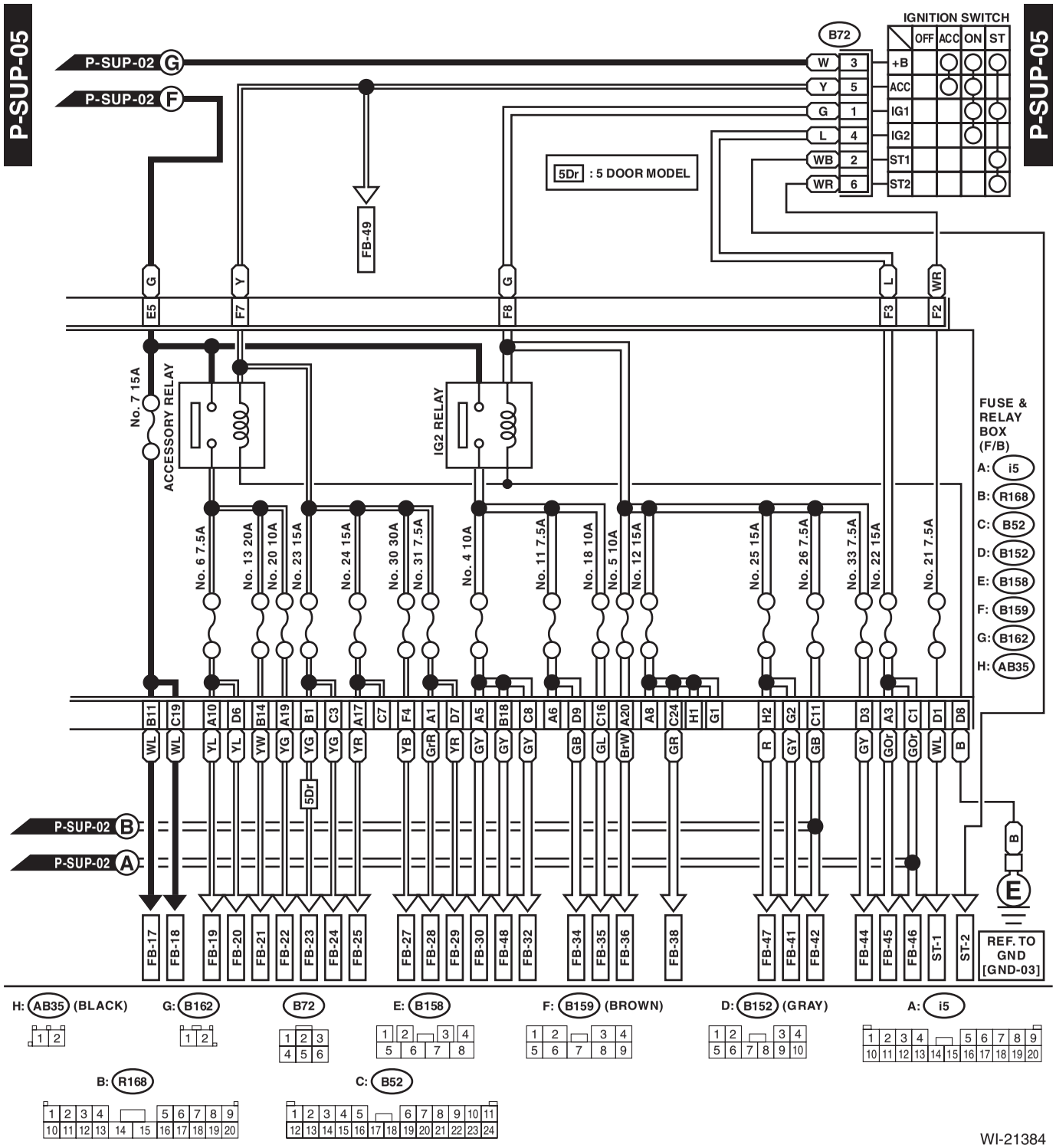

No.	Load
MB-1	ABS control module
	VDC control module
MB-2	ABS control module
	VDC control module
MB-4	Sub fan relay
MB-5	Mirror heater LH
	Mirror heater RH
	Rear defogger
	A/C control panel
MB-6	Body integrated unit
MB-7	Main Fan Relay 2
MB-8	Main fan motor
MB-9	ECM
MB-10	Main fan relay 2
MB-11	Main fan relay 2
MB-12	Body integrated unit
MB-13	Body integrated unit
MB-15	Front fog light relay
MB-16	Headlight LH (LO)
	Headlight RH (LO)
MB-17	Daytime running light relay
MB-18	Body integrated unit
MB-19	Horn
MB-20	Horn
MB-21	Horn switch
	Body integrated unit
	Remote engine start control module
MB-22	A/F, oxygen sensor relay
MB-23	Main relay
	IG relay
	A/F, oxygen sensor relay
MB-24	Electronic throttle control relay
MB-25	Fuel pump relay
MB-26	TCM
MB-27	ECM
	Data link connector
MB-28	Key illumination
	Key warning switch
	Turn signal and hazard unit
	Body integrated unit
MB-29	Spot map light
	Room light
	Body integrated unit
MB-30	Power window circuit breaker
MB-32	Tail & Illumination relay
	Daytime running light relay
MB-33	Secondary air pump relay
MB-34	Secondary air combination valve relay 1
	Secondary air combination valve relay 2
ALT-1	Combination meter

No.	Load
ST-1	Starter relay
ST-2	Starter relay
	ECM
	Clutch switch
FB-3	Stop light and brake switch
FB-4	Wiper deicer relay
FB-5	Seat heater relay
FB-6	Body integrated unit
FB-8	Blower motor relay
FB-9	Front fog light relay
FB-10	Audio
	Clock
	Navigation module
FB-11	Keyless entry control module
	Trunk room light (4 door model)
	Luggage room light (5 door model)
FB-17	A/C control panel
	Combination meter
	TPM control module
FB-18	Body integrated unit
	Impact sensor
	Mode door actuator
	Air mix door actuator
FB-19	Remote control mirror switch
FB-20	Seat heater relay
	Compass mirror
FB-21	Rear accessory power supply socket
FB-22	Front accessory power supply socket
FB-23	Rear wiper motor
FB-24	Body integrated unit
	Rear washer motor
FB-25	Audio
	Navigation module
FB-27	Combination switch
	Front wiper motor
FB-28	A/C control panel
FB-29	Body integrated unit
FB-30	Navigation module
FB-32	ECM
	Clutch switch
	Impact sensor
	Data link connector
	Stop light and brake switch
	Wiper deicer relay
	Sunroof motor assembly
	Sunroof switch
	Sunroof switch (tilt)
FB-34	Turn signal and hazard unit
FB-35	Inhibitor switch
	Back-up light switch

No.	Load
FB-36	Combination meter
	Clock
FB-38	ECM
	TCM
	Body integrated unit
	Fuel pump relay
	Ignition coil No. 1
	Ignition coil No. 2
	Ignition coil No. 3
	Ignition coil No. 4
	Rear vehicle speed sensor
FB-41	Airbag control module
FB-42	Power window relay
FB-44	ABS control module
	VDC control module
	Steering angle sensor
	Yaw rate & G sensor
FB-45	A/C control panel
FB-46	A/C relay
	Intake door actuator
	Sub fan relay
	Pressure switch
	Blower motor relay
FB-47	Occupant detection control module
FB-48	TPM control module
FB-49	Front washer motor

4. Ground Circuit

A: WIRING DIAGRAM

1. BODY GROUND

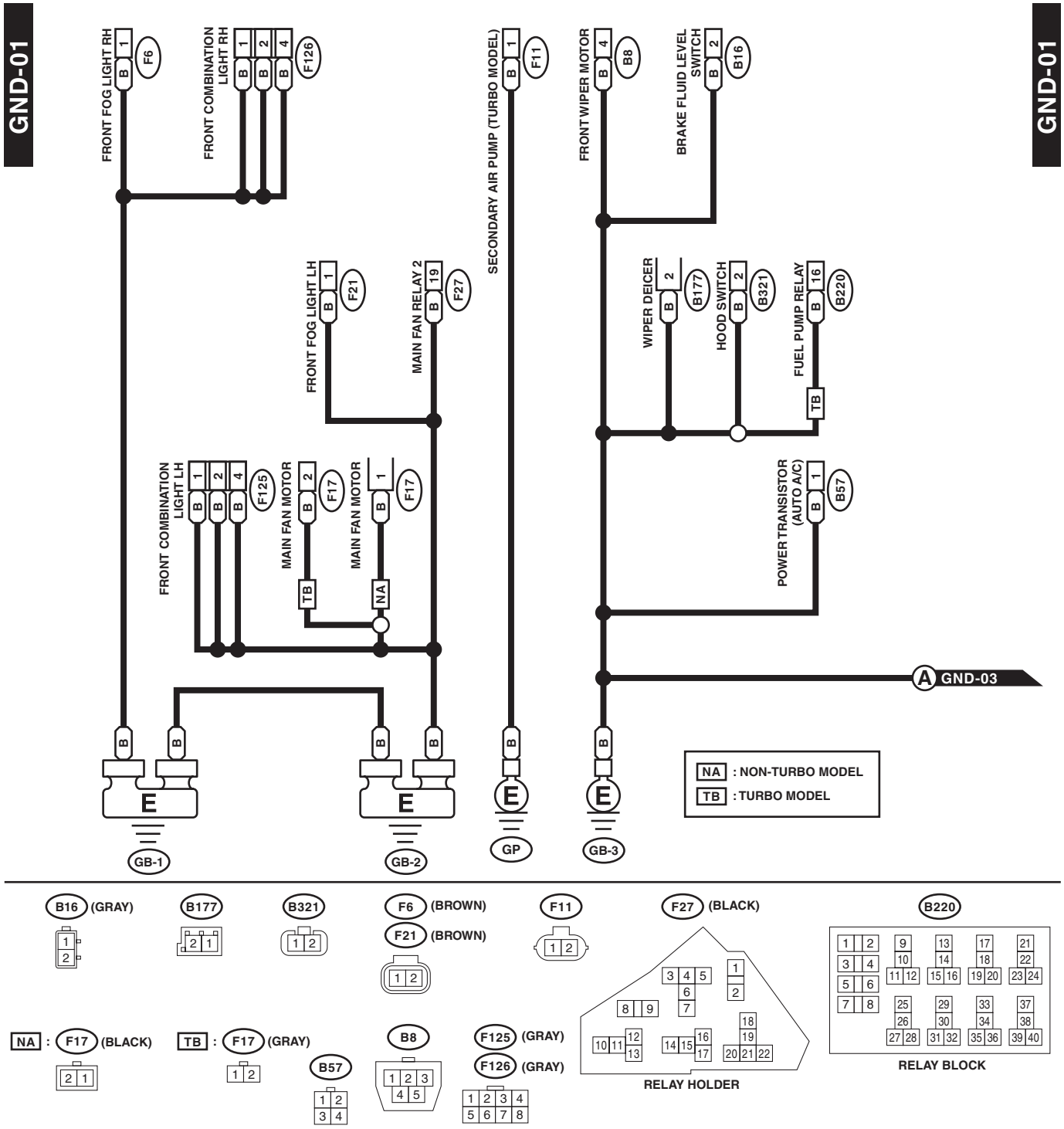

WI-21385

Ground Circuit

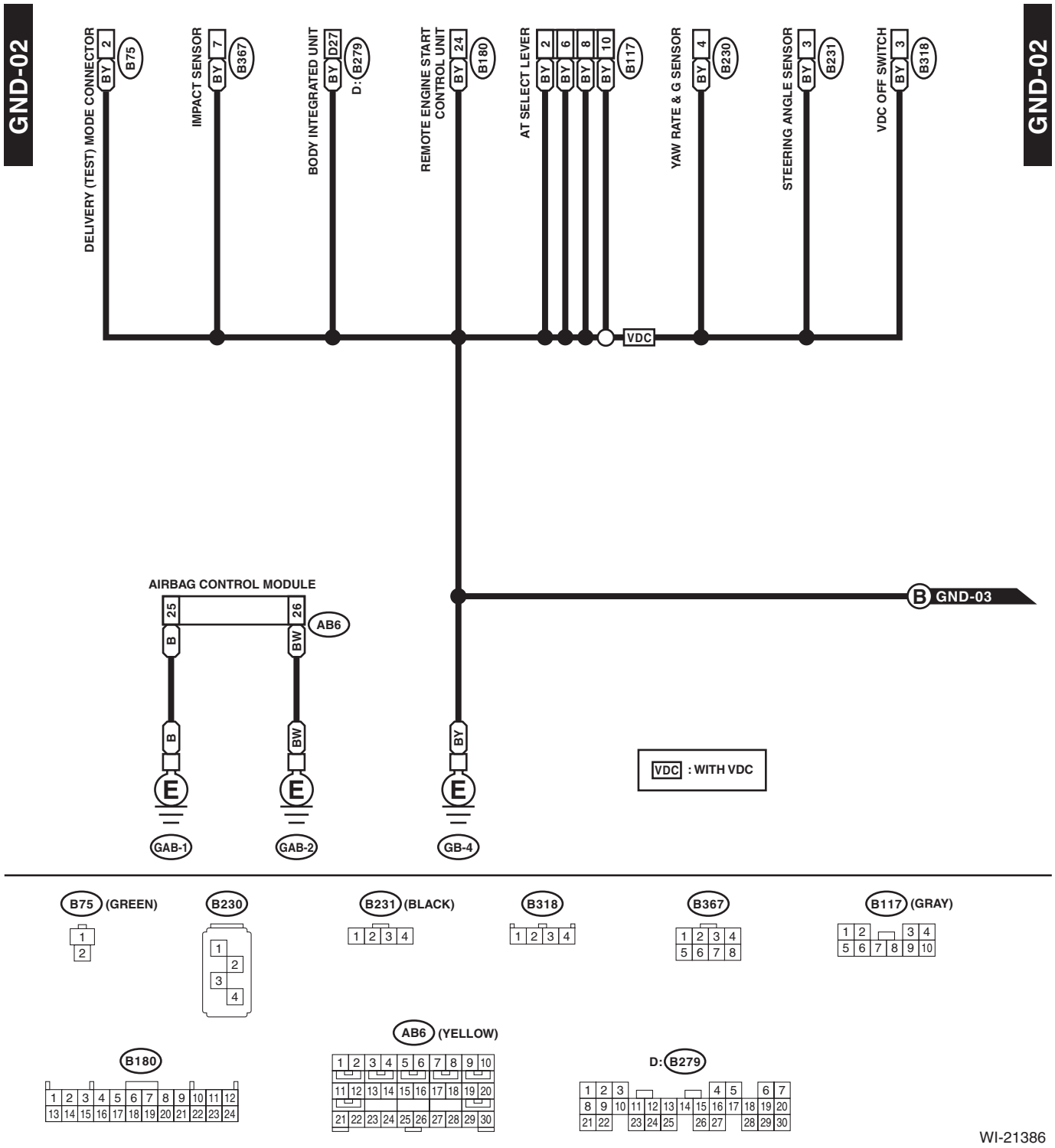

WI-21386

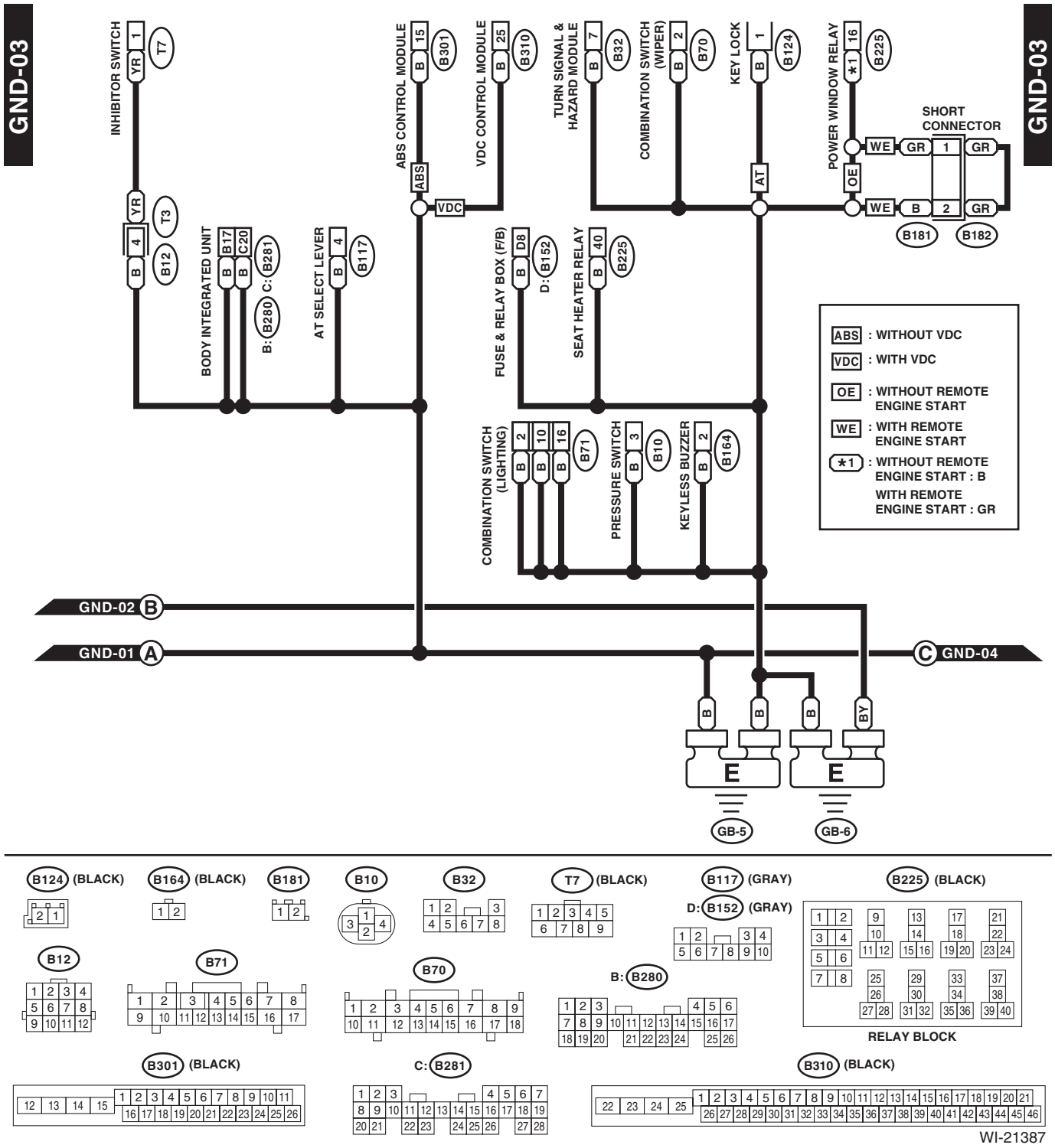
GND-03
INHIBITOR SWITCH
ABS CONTROL MODULE
VDC CONTROL MODULE
TURN SIGNAL & HAZARD MODULE
COMBINATION SWITCH (WIPER)
KEY LOCK
POWER WINDOW RELAY
SHORT CONNECTOR
BODY INTEGRATED UNIT
AT SELECT LEVER
FUSE & RELAY BOX (F/B)
SEAT HEATER RELAY
COMBINATION SWITCH (LIGHTING)
PRESSURE SWITCH
KEYLESS BUZZER
ABS : WITHOUT VDC
VDC : WITH VDC
OE : WITHOUT REMOTE ENGINE START
WE : WITH REMOTE ENGINE START
*1 : WITHOUT REMOTE ENGINE START : B
WITH REMOTE ENGINE START : GR
GND-02
GND-01
GND-04
GB-5
GB-6

B124 (BLACK)
B164 (BLACK)
B181
B10
B32
T7 (BLACK)
B117 (GRAY)
D: B152 (GRAY)
B225 (BLACK)
B12
B71
B70
B: B280
RELAY BLOCK
B301 (BLACK)
C: B281
B310 (BLACK)
WI-21387

Ground Circuit

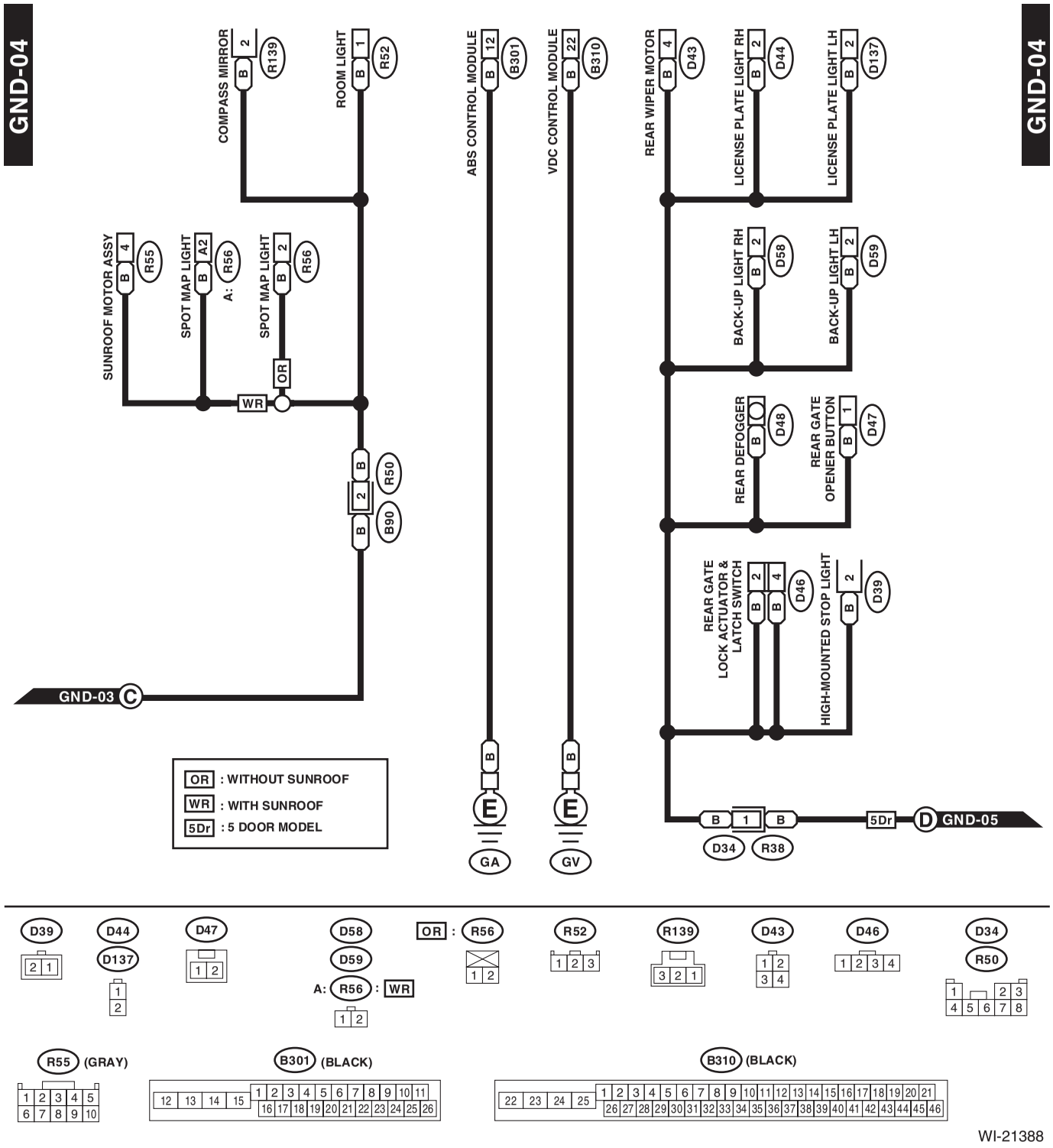

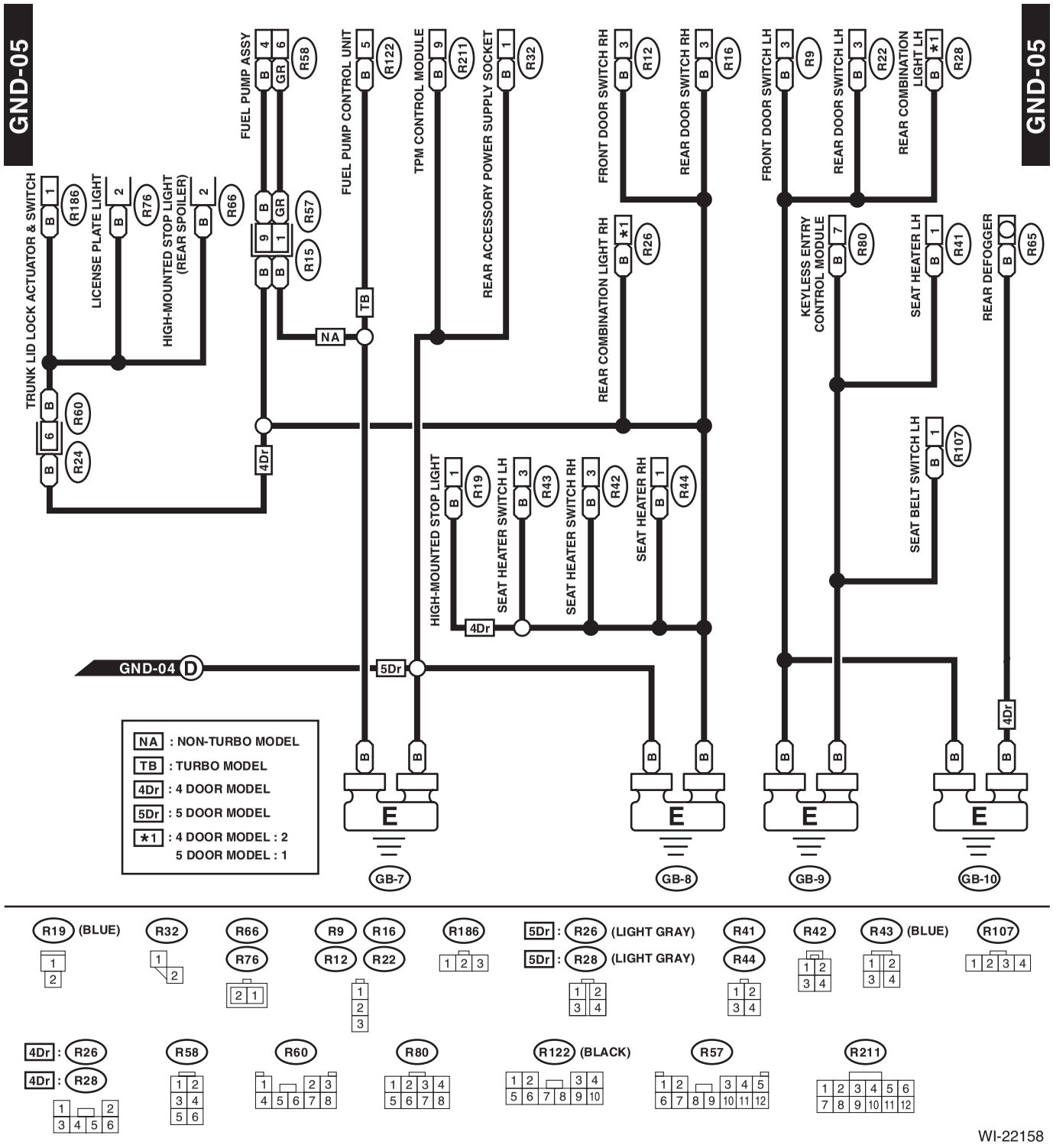
GND-05
GND-05
TRUNK LID LOCK ACTUATOR & SWITCH
LICENSE PLATE LIGHT
HIGH-MOUNTED STOP LIGHT (REAR SPOILER)
FUEL PUMP ASSY
FUEL PUMP CONTROL UNIT
TPM CONTROL MODULE
REAR ACCESSORY POWER SUPPLY SOCKET
FRONT DOOR SWITCH RH
REAR DOOR SWITCH RH
FRONT DOOR SWITCH LH
REAR DOOR SWITCH LH
REAR COMBINATION LIGHT LH
REAR COMBINATION LIGHT RH
KEYLESS ENTRY CONTROL MODULE
SEAT HEATER LH
REAR DEFOGGER
SEAT BELT SWITCH LH
HIGH-MOUNTED STOP LIGHT
SEAT HEATER SWITCH LH
SEAT HEATER SWITCH RH
SEAT HEATER RH
GND-04 D
NA : NON-TURBO MODEL
TB : TURBO MODEL
4Dr : 4 DOOR MODEL
5Dr : 5 DOOR MODEL
*1 : 4 DOOR MODEL : 2
5 DOOR MODEL : 1
GB-7
GB-8
GB-9
GB-10
R19 (BLUE)
R32
R66
R76
R9
R12
R16
R22
R186
5Dr : R26 (LIGHT GRAY)
5Dr : R28 (LIGHT GRAY)
R41
R44
R42
R43 (BLUE)
R107
4Dr : R26
4Dr : R28
R58
R60
R80
R122 (BLACK)
R57
R211
WI-22158

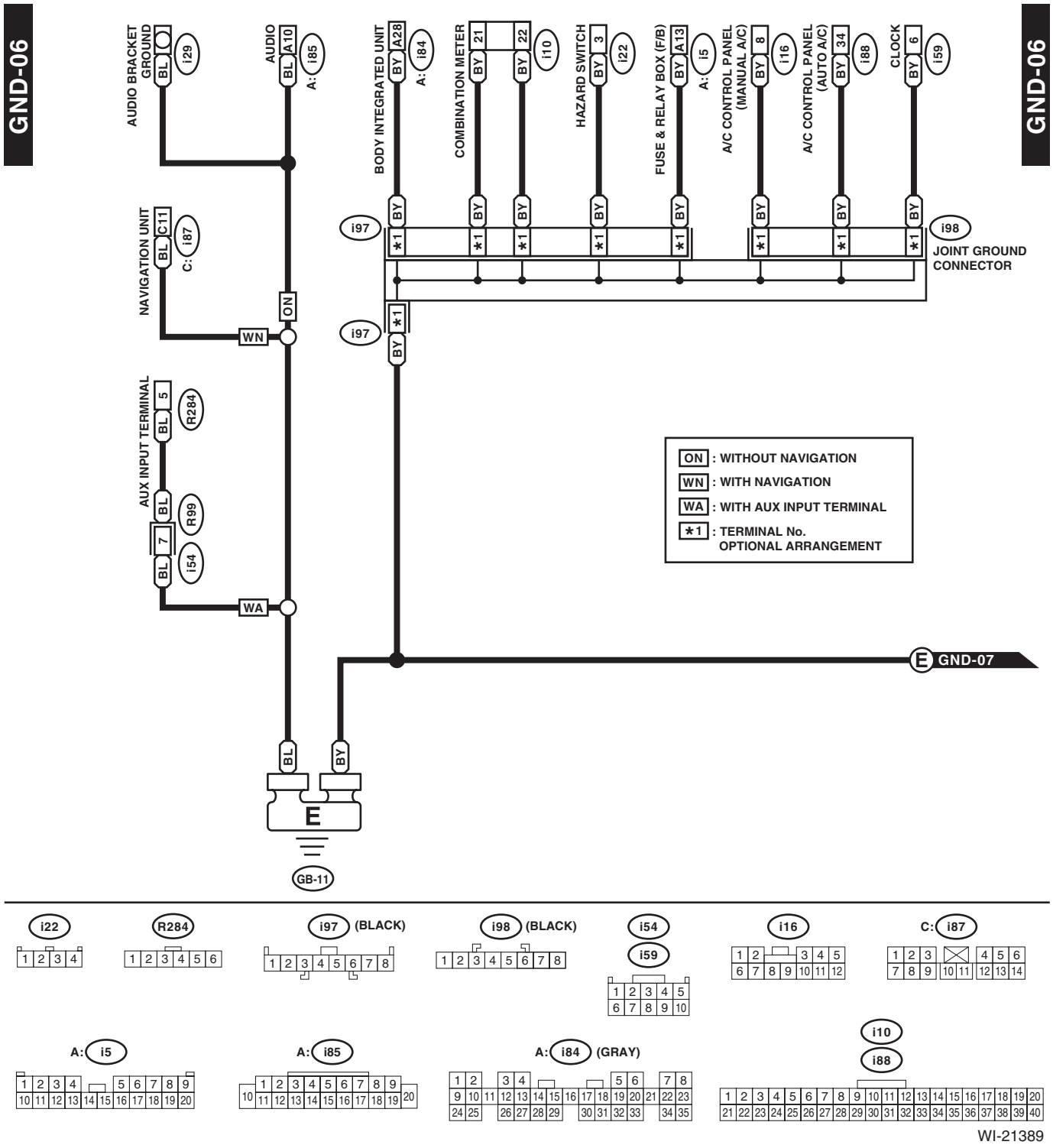
GND-06
AUDIO BRACKET GROUND
BL
i29
AUDIO
BL A10
A: i85
BODY INTEGRATED UNIT
BY A28
A: i84
COMBINATION METER
21
22
BY
i10
HAZARD SWITCH
BY 3
i22
FUSE & RELAY BOX (F/B)
BY A13
A: i5
A/C CONTROL PANEL (MANUAL A/C)
BY 8
i16
A/C CONTROL PANEL (AUTO A/C)
BY 34
i88
CLOCK
BY 6
i59
GND-06
NAVIGATION UNIT
BL C11
C: i87
i97
*1
i98
JOINT GROUND CONNECTOR
ON
WN
AUX INPUT TERMINAL
BL 5
R284
BL
R99
7
BL
i54
WA
ON : WITHOUT NAVIGATION
WN : WITH NAVIGATION
WA : WITH AUX INPUT TERMINAL
*1 : TERMINAL No. OPTIONAL ARRANGEMENT
E GND-07
BL
BY
E
GB-11
i22
R284
i97 (BLACK)
i98 (BLACK)
i54
i59
i16
C: i87
A: i5
A: i85
A: i84 (GRAY)
i10
i88
WI-21389

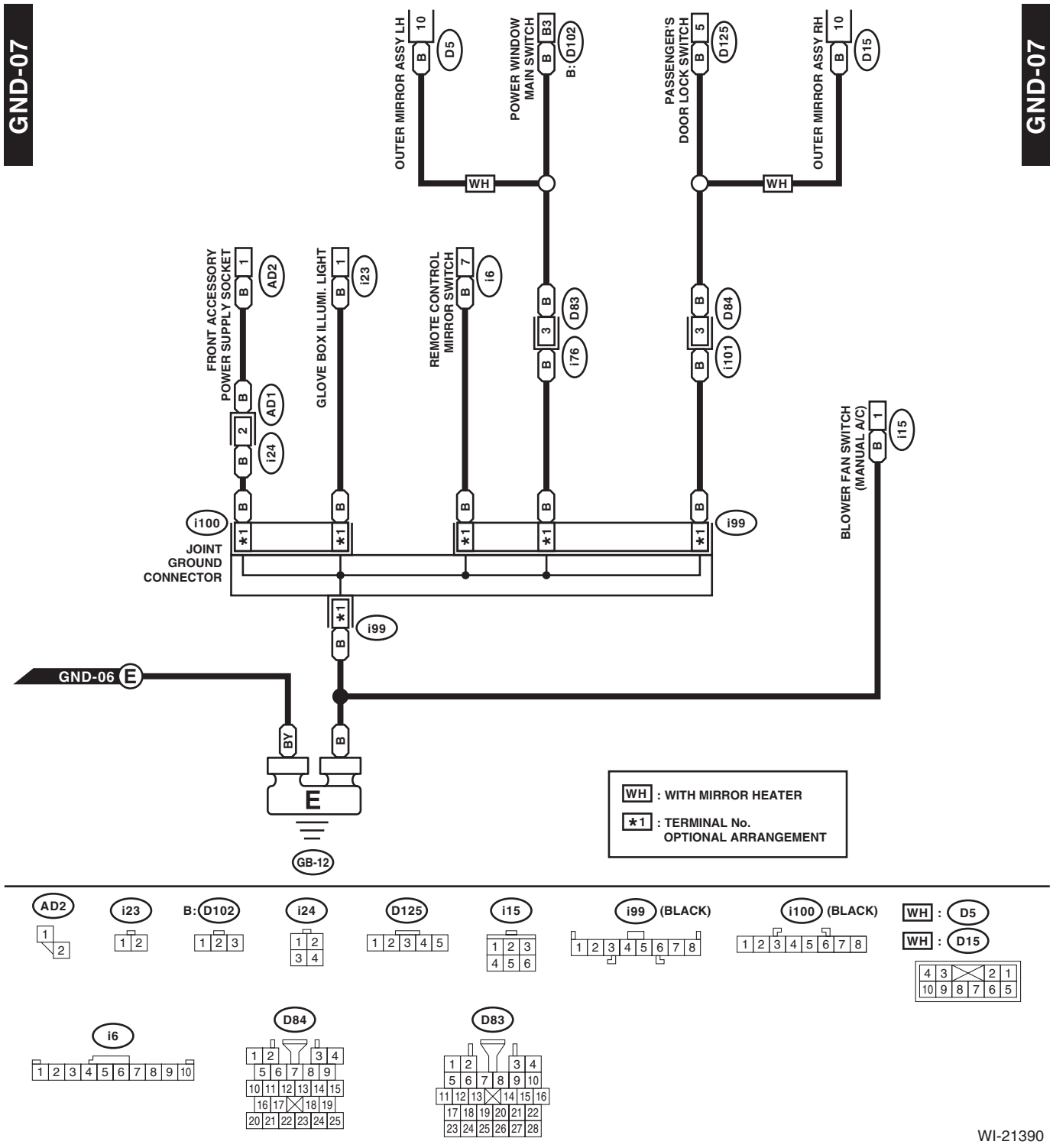
GND-07
GND-07
OUTER MIRROR ASSY LH
POWER WINDOW MAIN SWITCH
PASSENGER'S DOOR LOCK SWITCH
OUTER MIRROR ASSY RH
WH
WH
FRONT ACCESSORY POWER SUPPLY SOCKET
GLOVE BOX ILLUMI. LIGHT
REMOTE CONTROL MIRROR SWITCH
BLOWER FAN SWITCH (MANUAL A/C)
JOINT GROUND CONNECTOR
GND-06
GB-12
WH : WITH MIRROR HEATER
*1 : TERMINAL No. OPTIONAL ARRANGEMENT
(BLACK)
(BLACK)

WI-21390

2. ENGINE GROUND (NON-TURBO MODEL)

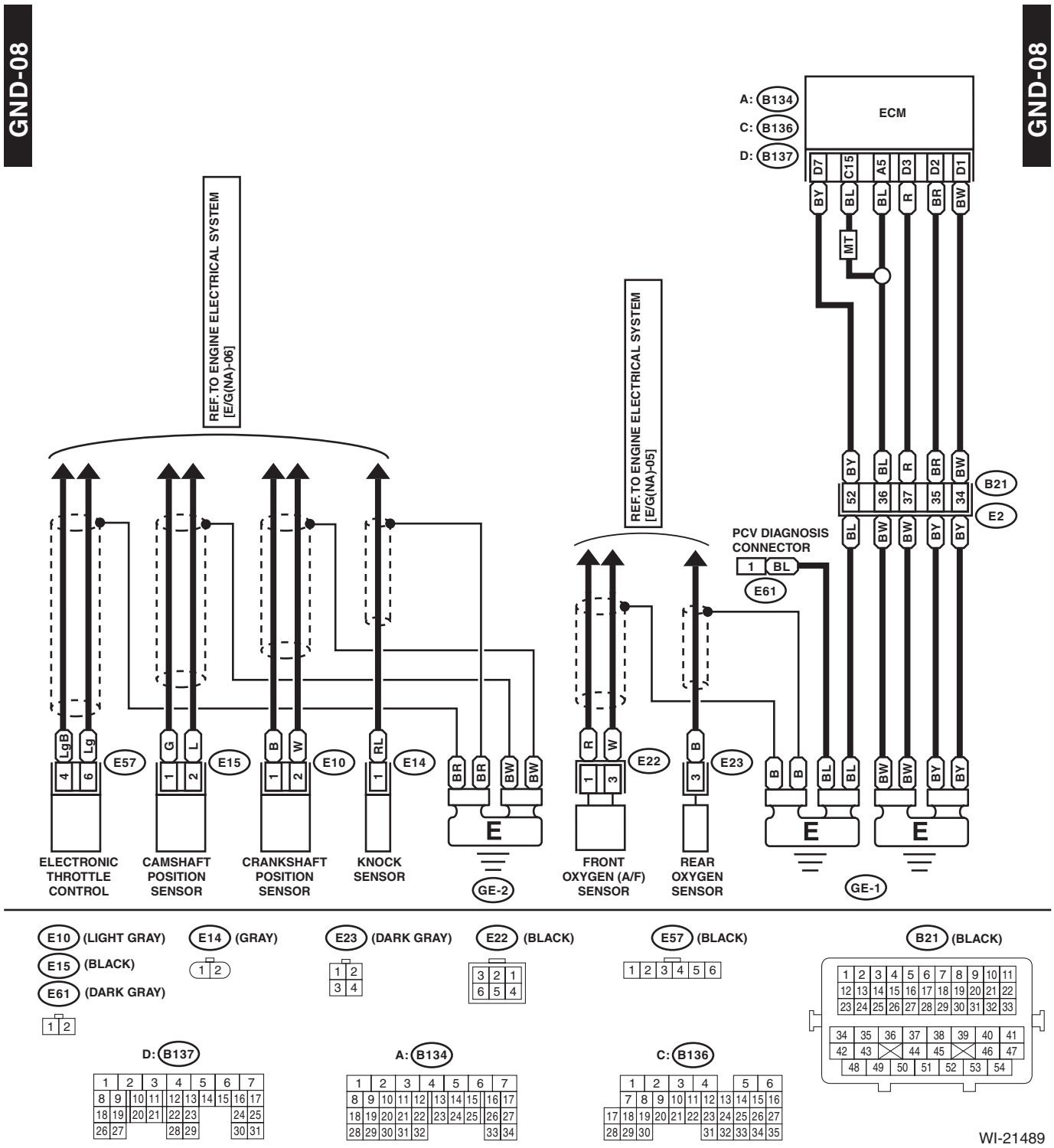

3. ENGINE GROUND (TURBO MODEL)

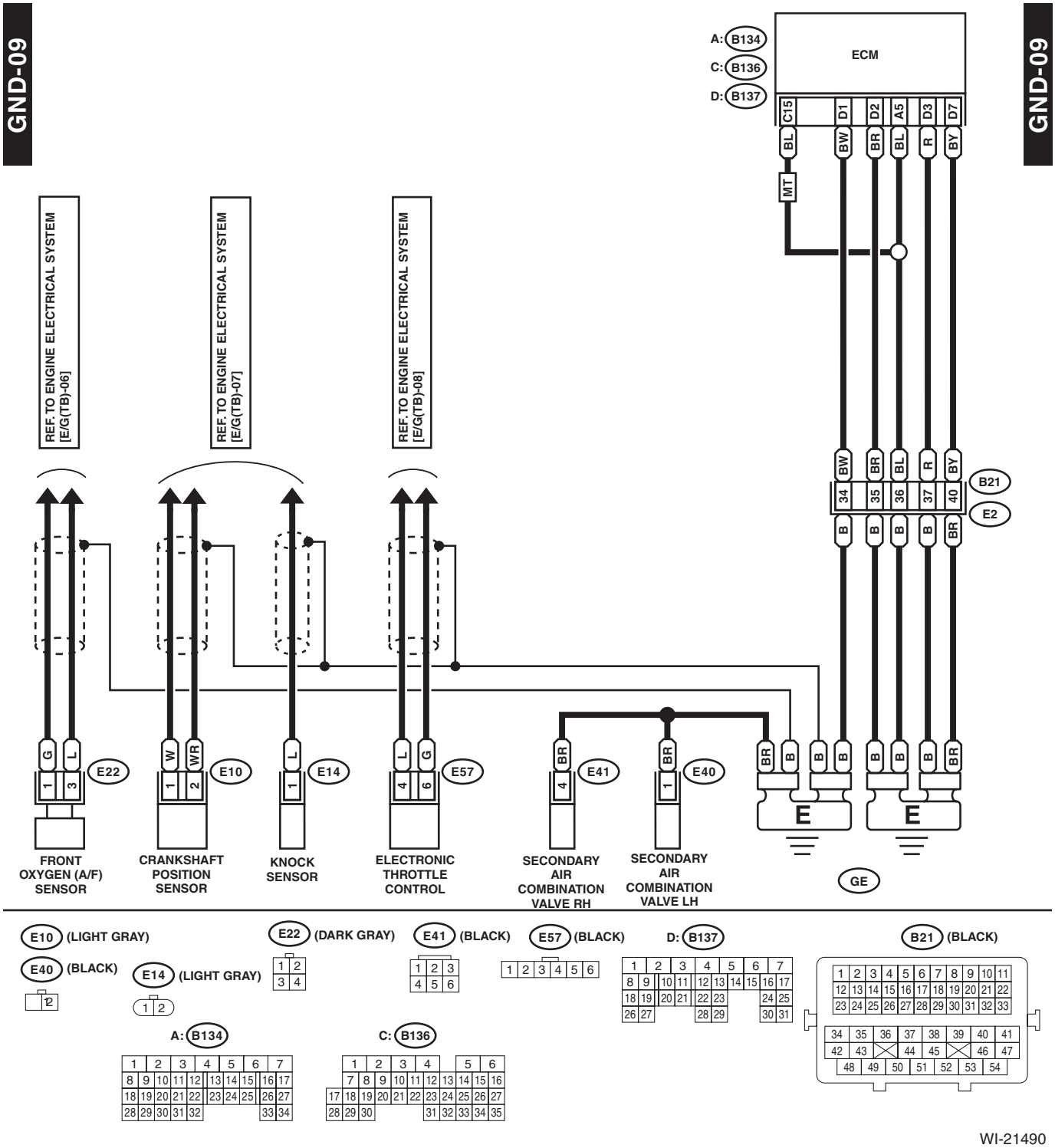

4. AT TRANSMISSION GROUND

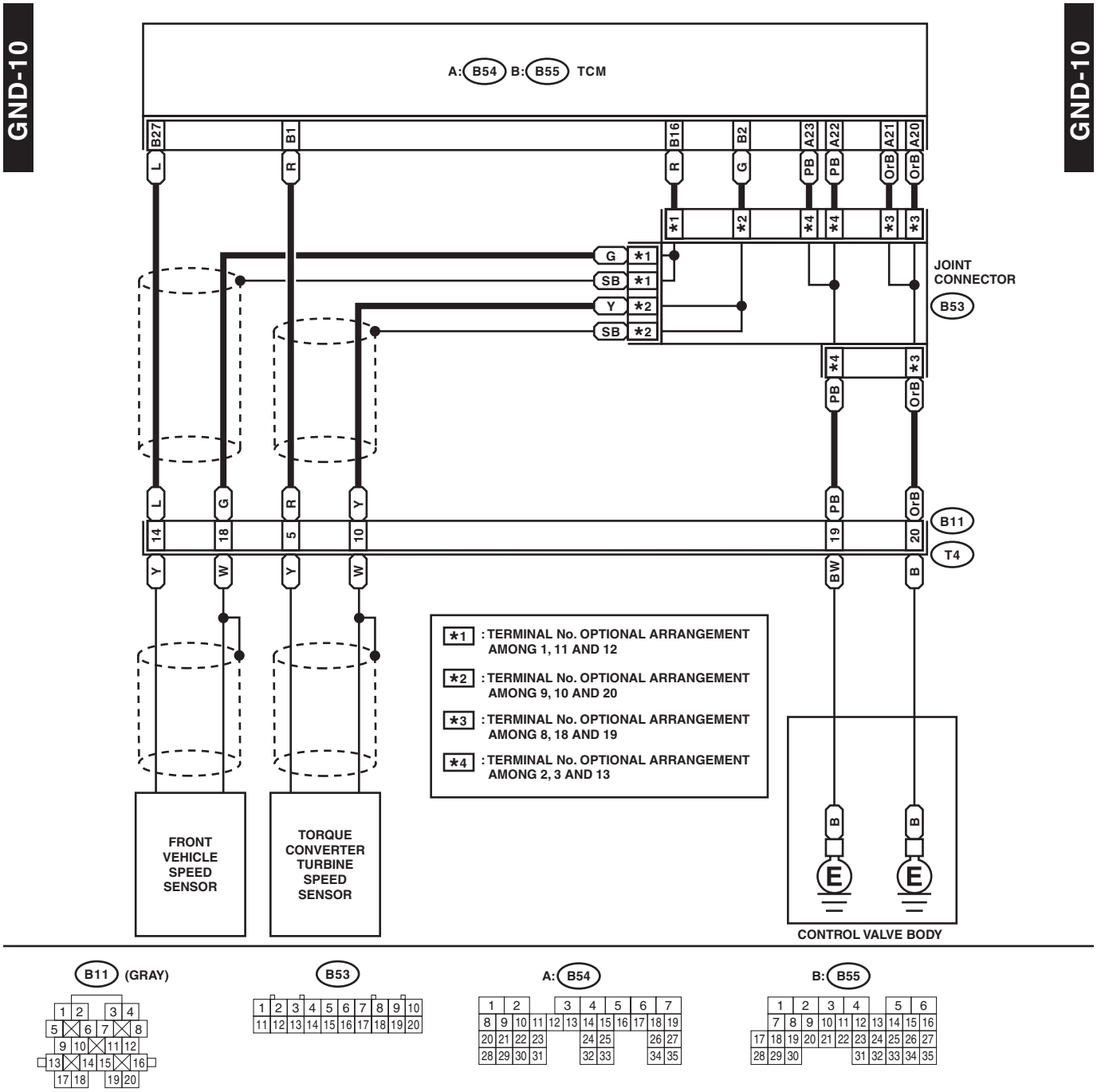

5. Engine Electrical System

A: WIRING DIAGRAM

1. NON-TURBO MODEL

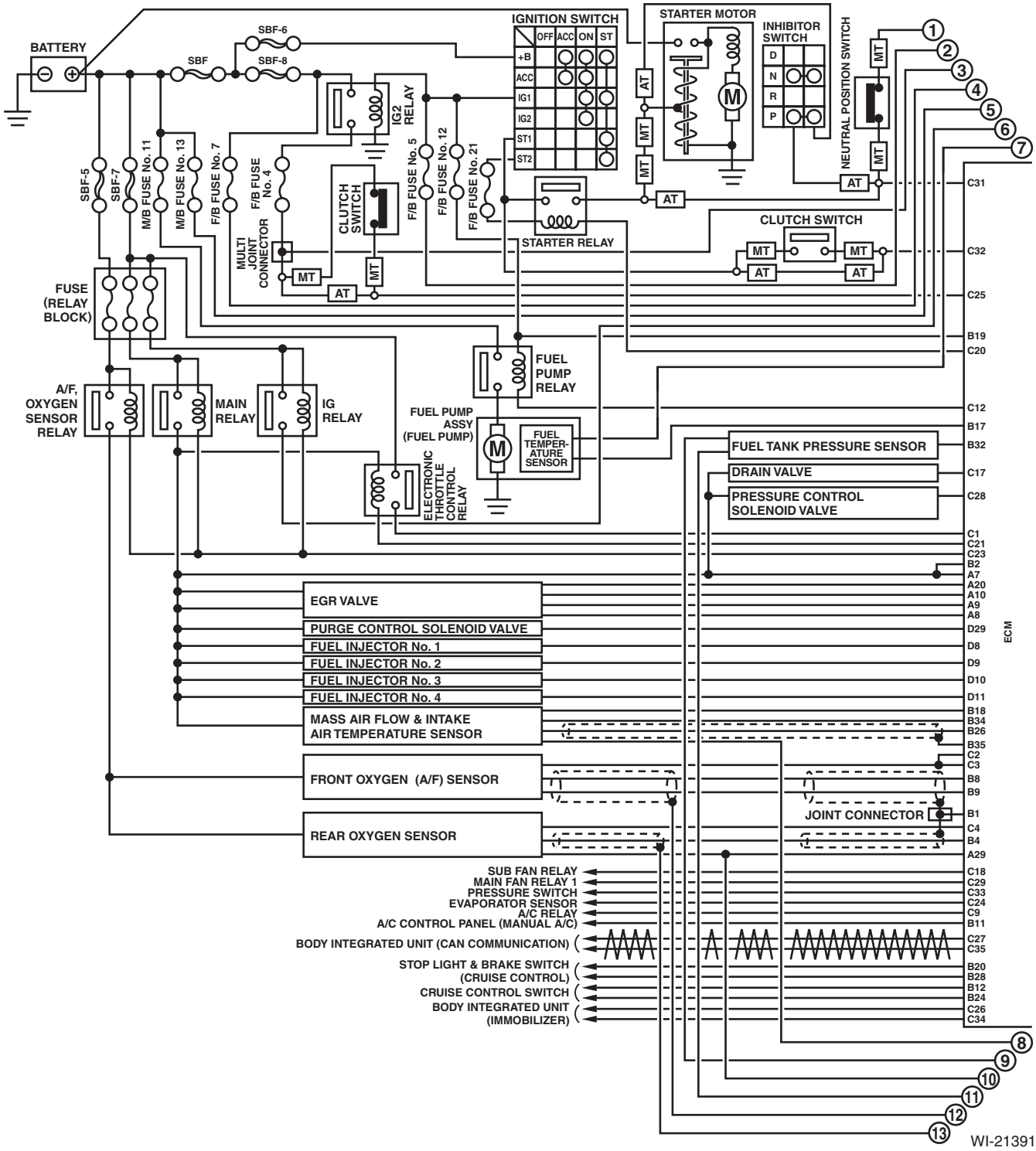

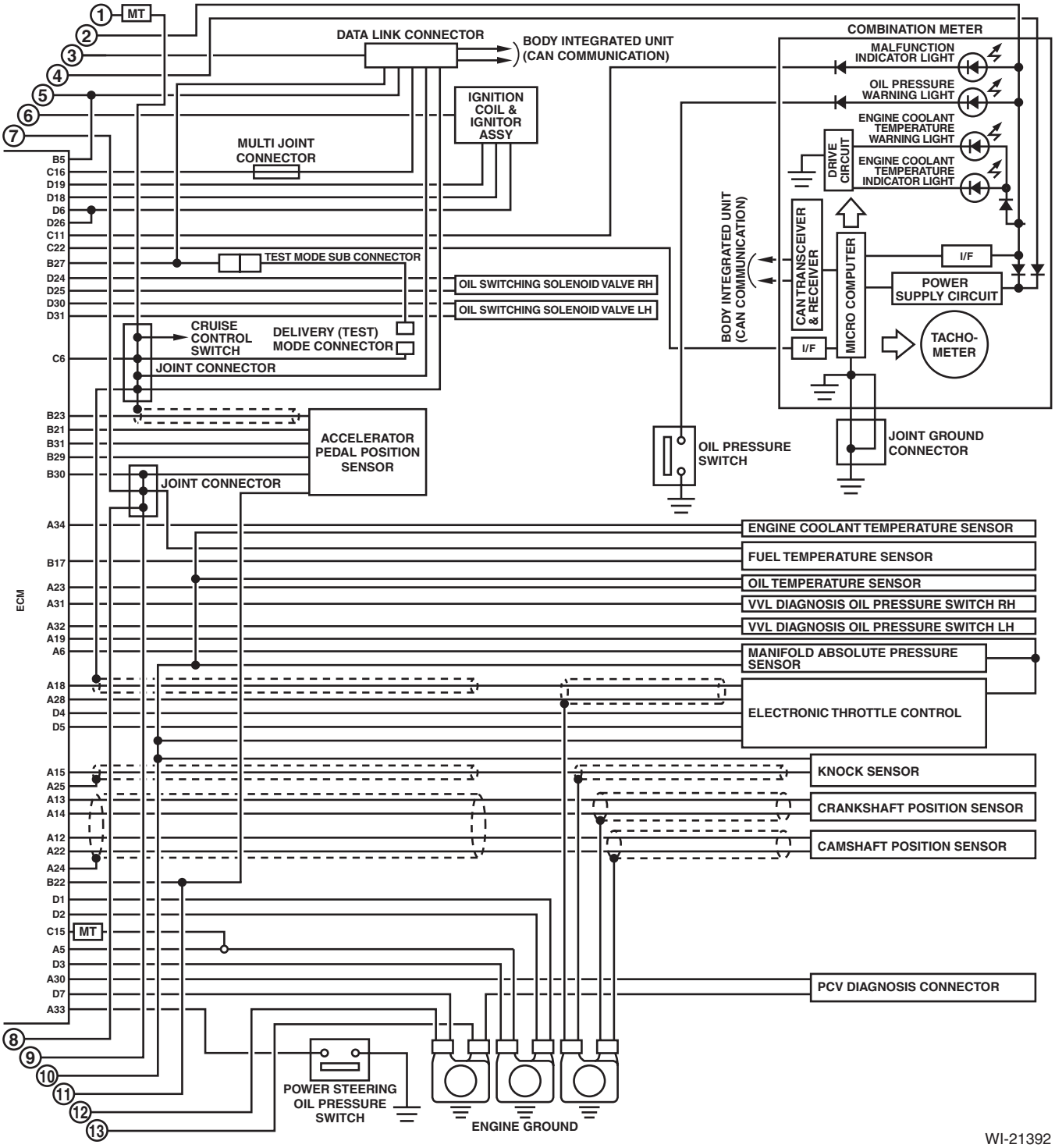
MT
DATA LINK CONNECTOR
BODY INTEGRATED UNIT (CAN COMMUNICATION)
COMBINATION METER
MALFUNCTION INDICATOR LIGHT
OIL PRESSURE WARNING LIGHT
ENGINE COOLANT TEMPERATURE WARNING LIGHT
ENGINE COOLANT TEMPERATURE INDICATOR LIGHT
DRIVE CIRCUIT
IGNITION COIL & IGNITOR ASSY
MULTI JOINT CONNECTOR
TEST MODE SUB CONNECTOR
OIL SWITCHING SOLENOID VALVE RH
OIL SWITCHING SOLENOID VALVE LH
CAN TRANSCEIVER & RECEIVER
MICRO COMPUTER
I/F
POWER SUPPLY CIRCUIT
TACHO-METER
CRUISE CONTROL SWITCH
DELIVERY (TEST) MODE CONNECTOR
JOINT CONNECTOR
ACCELERATOR PEDAL POSITION SENSOR
OIL PRESSURE SWITCH
JOINT GROUND CONNECTOR
ECM
ENGINE COOLANT TEMPERATURE SENSOR
FUEL TEMPERATURE SENSOR
OIL TEMPERATURE SENSOR
VVL DIAGNOSIS OIL PRESSURE SWITCH RH
VVL DIAGNOSIS OIL PRESSURE SWITCH LH
MANIFOLD ABSOLUTE PRESSURE SENSOR
ELECTRONIC THROTTLE CONTROL
KNOCK SENSOR
CRANKSHAFT POSITION SENSOR
CAMSHAFT POSITION SENSOR
PCV DIAGNOSIS CONNECTOR
POWER STEERING OIL PRESSURE SWITCH
ENGINE GROUND
WI-21392

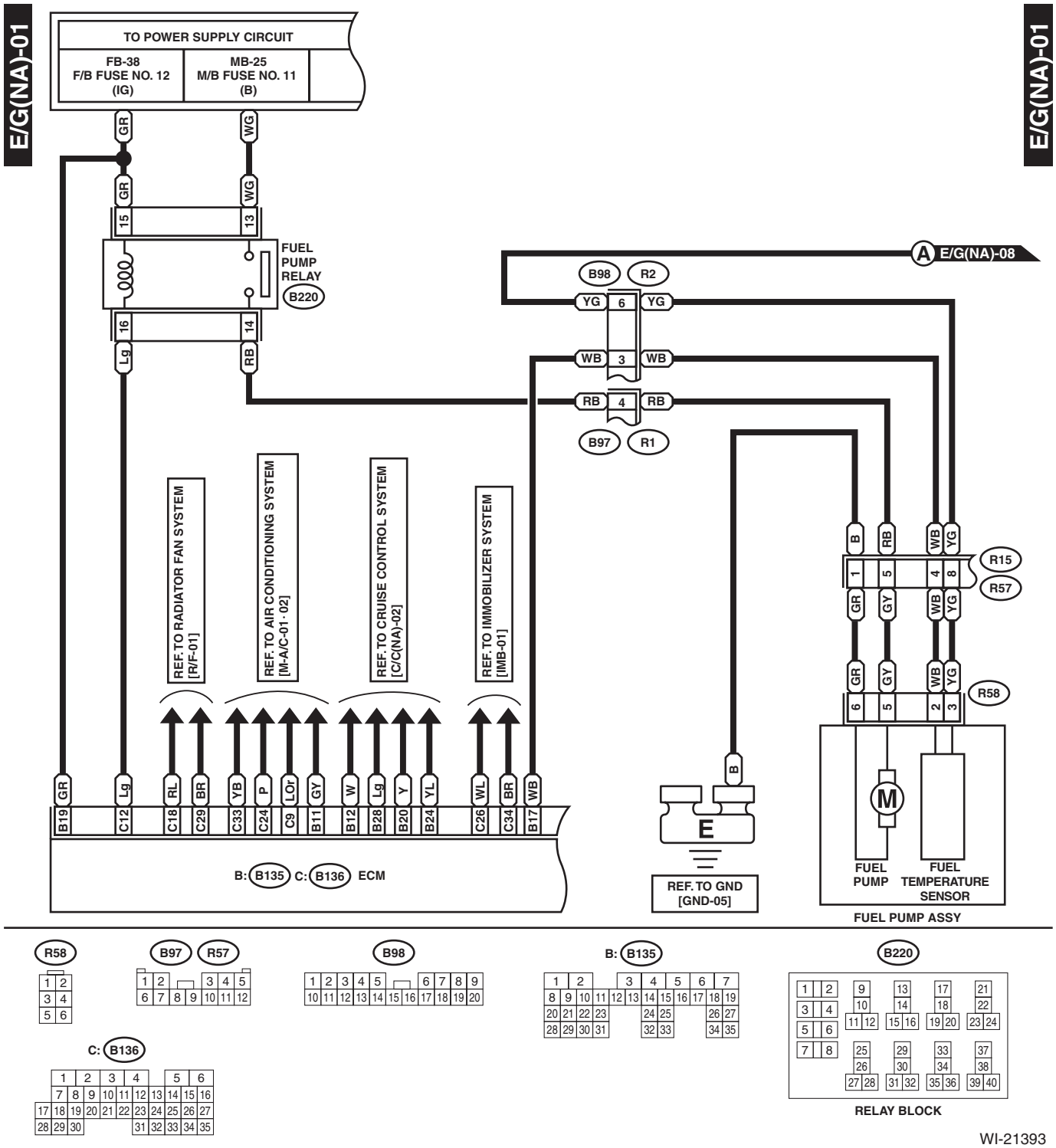
E/G(NA)-01
TO POWER SUPPLY CIRCUIT
FB-38
F/B FUSE NO. 12
(IG)
MB-25
M/B FUSE NO. 11
(B)
FUEL PUMP RELAY
B220
A E/G(NA)-08
B98
R2
B97
R1
R15
R57
R58
REF. TO RADIATOR FAN SYSTEM [R/F-01]
REF. TO AIR CONDITIONING SYSTEM [M-A/C-01 · 02]
REF. TO CRUISE CONTROL SYSTEM [C/C(NA)-02]
REF. TO IMMOBILIZER SYSTEM [IMB-01]
B: B135 C: B136 ECM
REF. TO GND [GND-05]
FUEL PUMP
FUEL TEMPERATURE SENSOR
FUEL PUMP ASSY
RELAY BLOCK
WI-21393

E/G(NA)-02

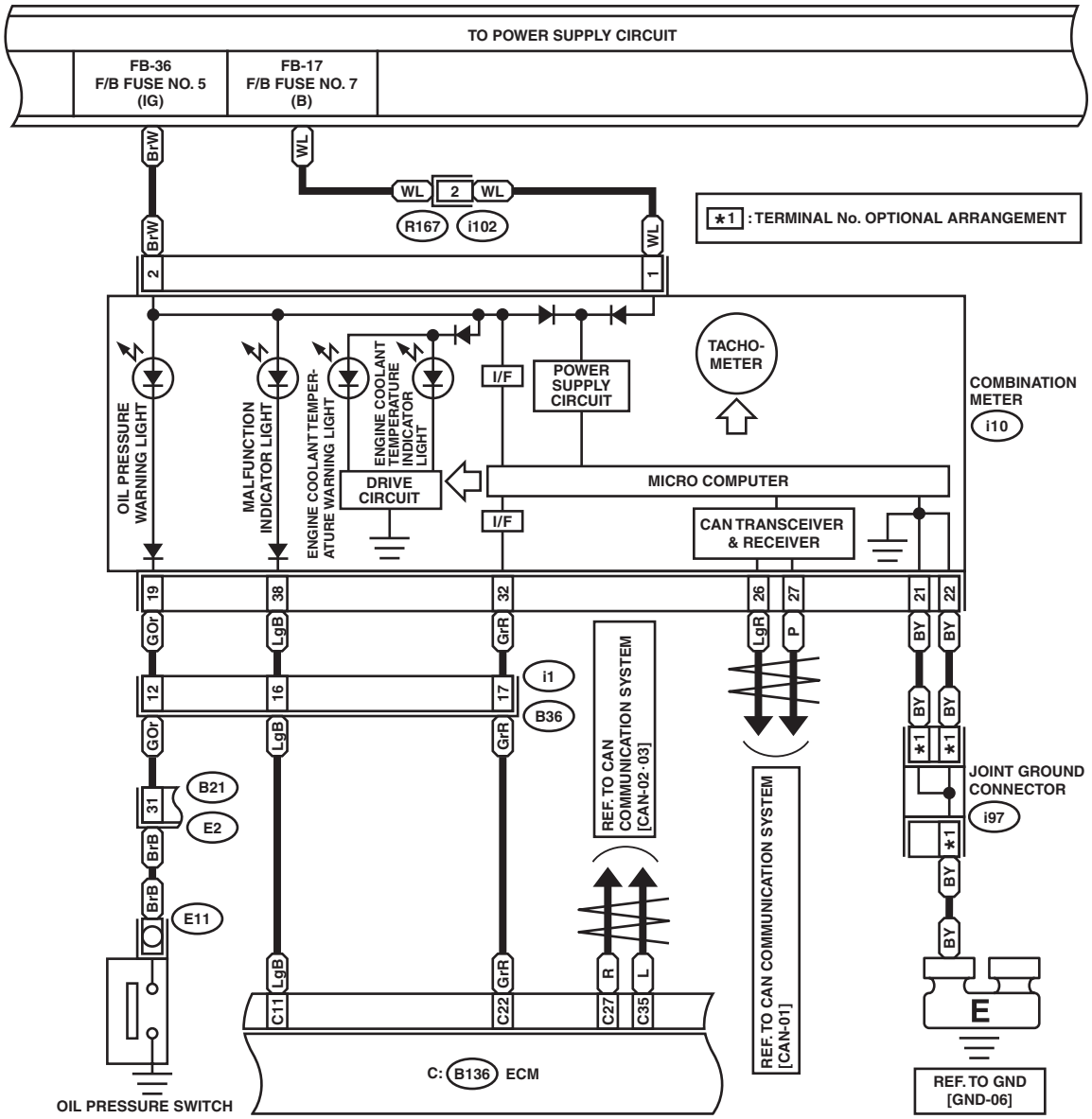

E/G(NA)-02

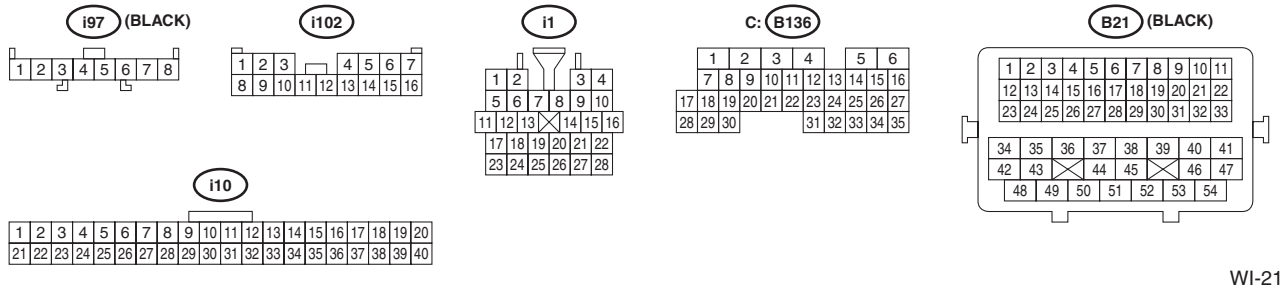

WI-21394

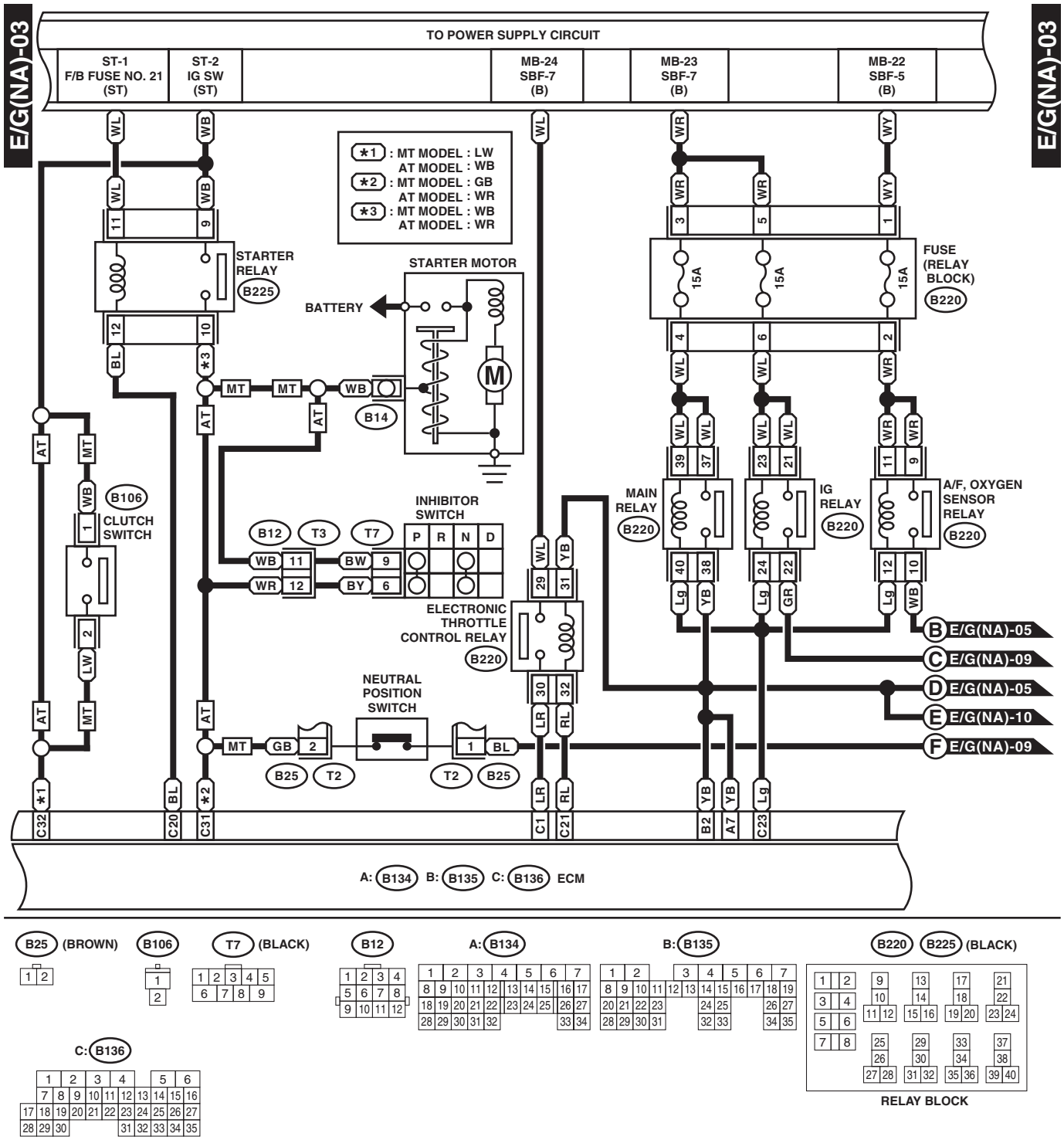
E/G(NA)-03
TO POWER SUPPLY CIRCUIT
ST-1 F/B FUSE NO. 21 (ST)
ST-2 IG SW (ST)
MB-24 SBF-7 (B)
MB-23 SBF-7 (B)
MB-22 SBF-5 (B)
*1 : MT MODEL : LW AT MODEL : WB
*2 : MT MODEL : GB AT MODEL : WR
*3 : MT MODEL : WB AT MODEL : WR
STARTER RELAY
B225
STARTER MOTOR
BATTERY
B14
FUSE (RELAY BLOCK)
B220
15A
B106
CLUTCH SWITCH
INHIBITOR SWITCH
P R N D
ELECTRONIC THROTTLE CONTROL RELAY
NEUTRAL POSITION SWITCH
MAIN RELAY
IG RELAY
A/F, OXYGEN SENSOR RELAY
B E/G(NA)-05
C E/G(NA)-09
D E/G(NA)-05
E E/G(NA)-10
F E/G(NA)-09
A: B134 B: B135 C: B136 ECM

B25 (BROWN)
B106
T7 (BLACK)
B12
A: B134
B: B135
B220 B225 (BLACK)
C: B136
RELAY BLOCK

WI-21395

E/G(NA)-04

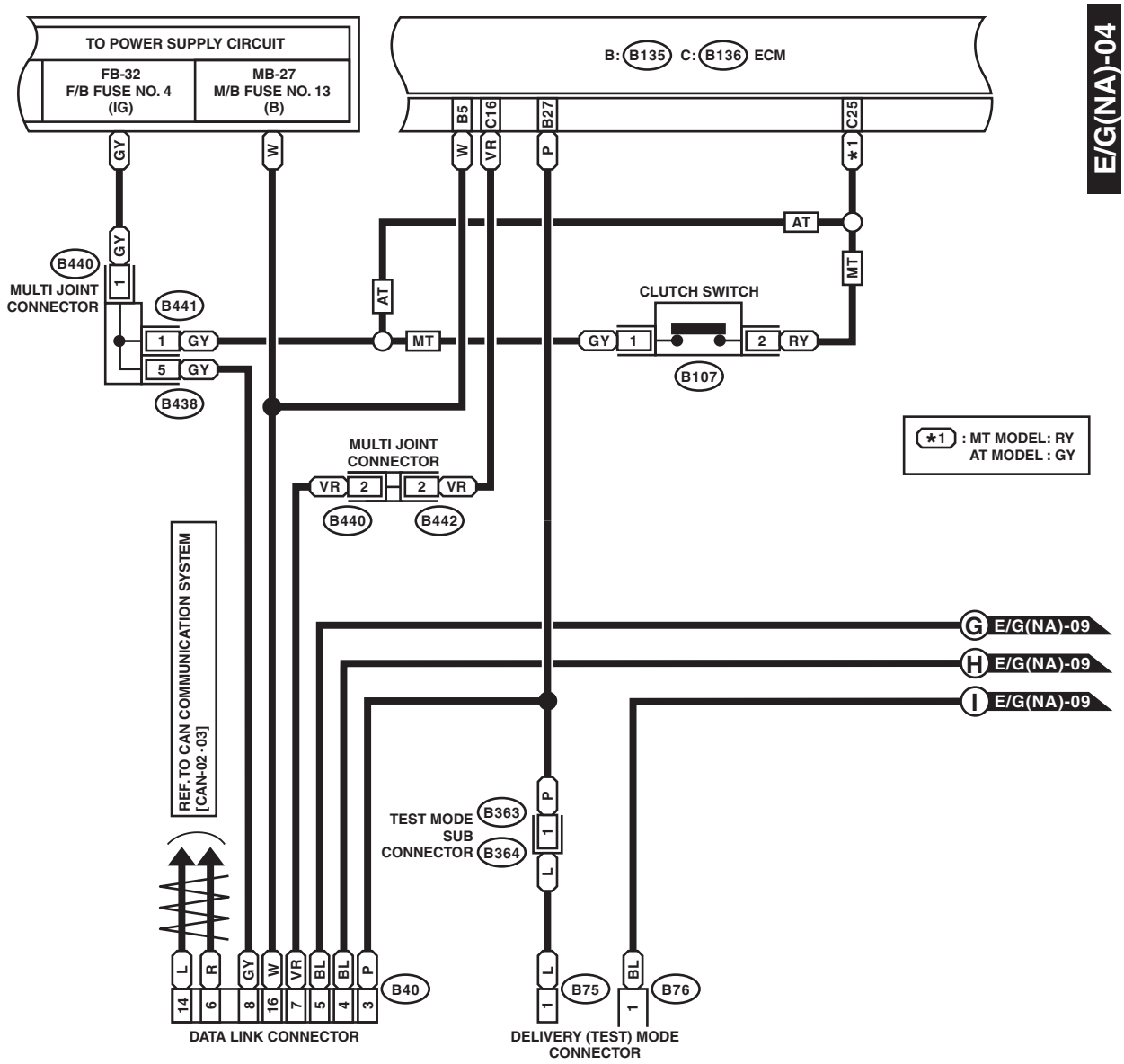

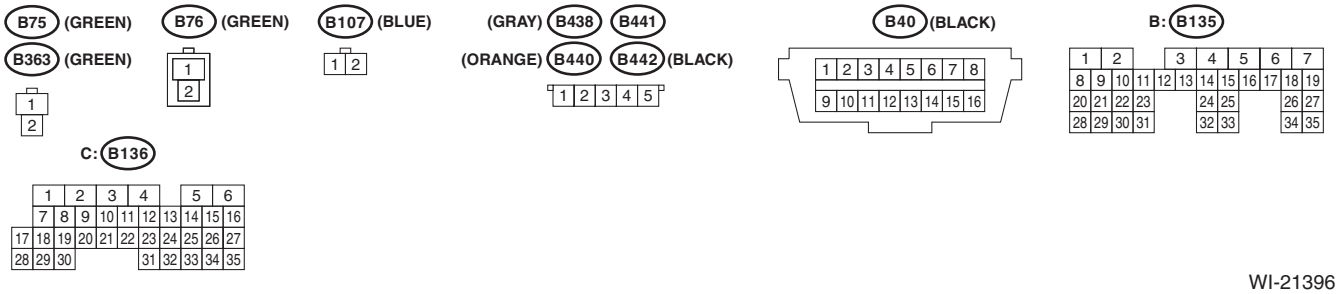

WI-21396

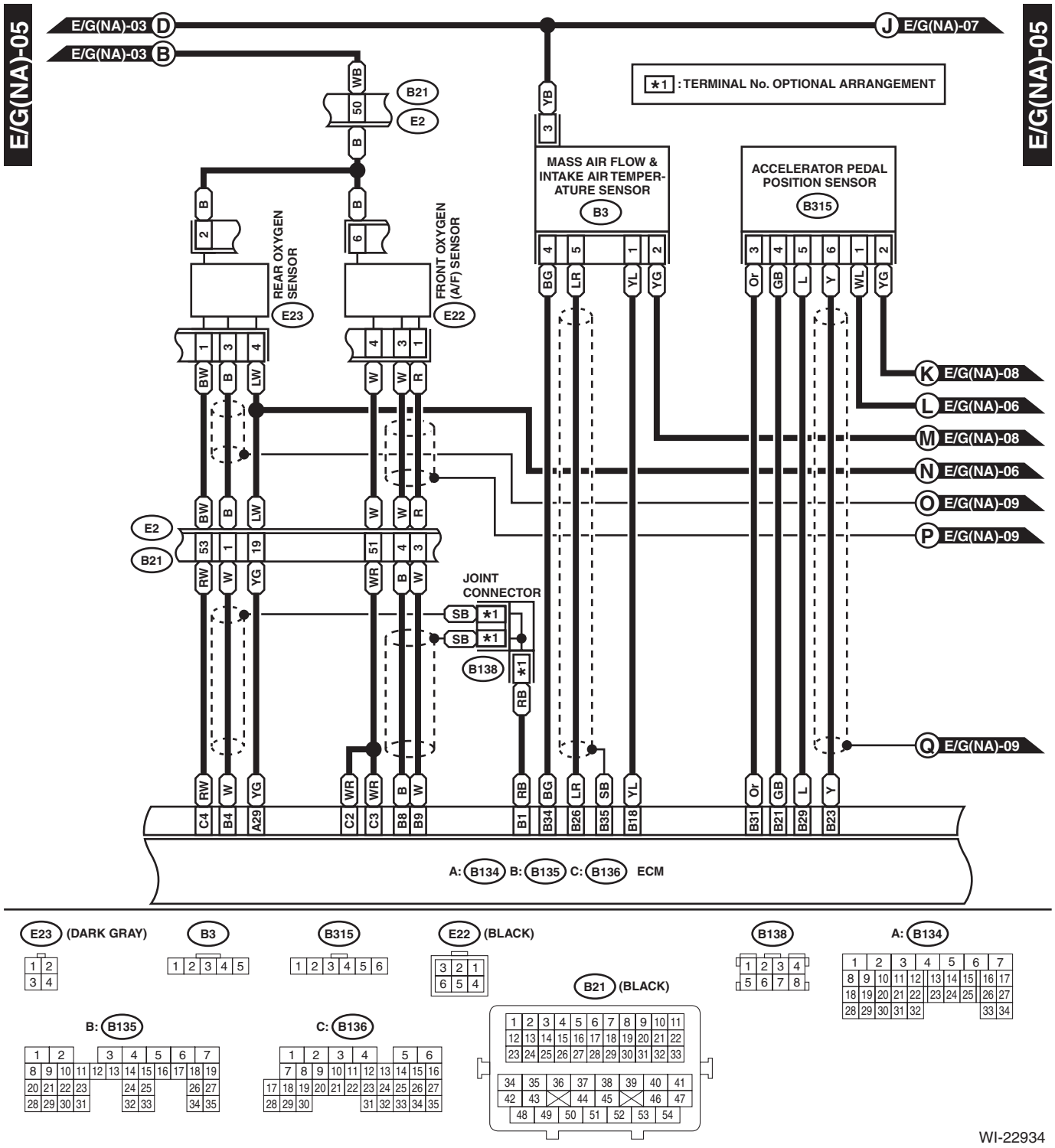
E/G(NA)-05
E/G(NA)-03 D
E/G(NA)-03 B
J E/G(NA)-07
*1 : TERMINAL No. OPTIONAL ARRANGEMENT
B21
E2
MASS AIR FLOW & INTAKE AIR TEMPERATURE SENSOR
B3
ACCELERATOR PEDAL POSITION SENSOR
B315
REAR OXYGEN SENSOR
E23
FRONT OXYGEN (A/F) SENSOR
E22
K E/G(NA)-08
L E/G(NA)-06
M E/G(NA)-08
N E/G(NA)-06
O E/G(NA)-09
P E/G(NA)-09
Q E/G(NA)-09
JOINT CONNECTOR
B138
A: B134 B: B135 C: B136 ECM
E23 (DARK GRAY)
B3
B315
E22 (BLACK)
B138
A: B134
B21 (BLACK)
B: B135
C: B136
WI-22934

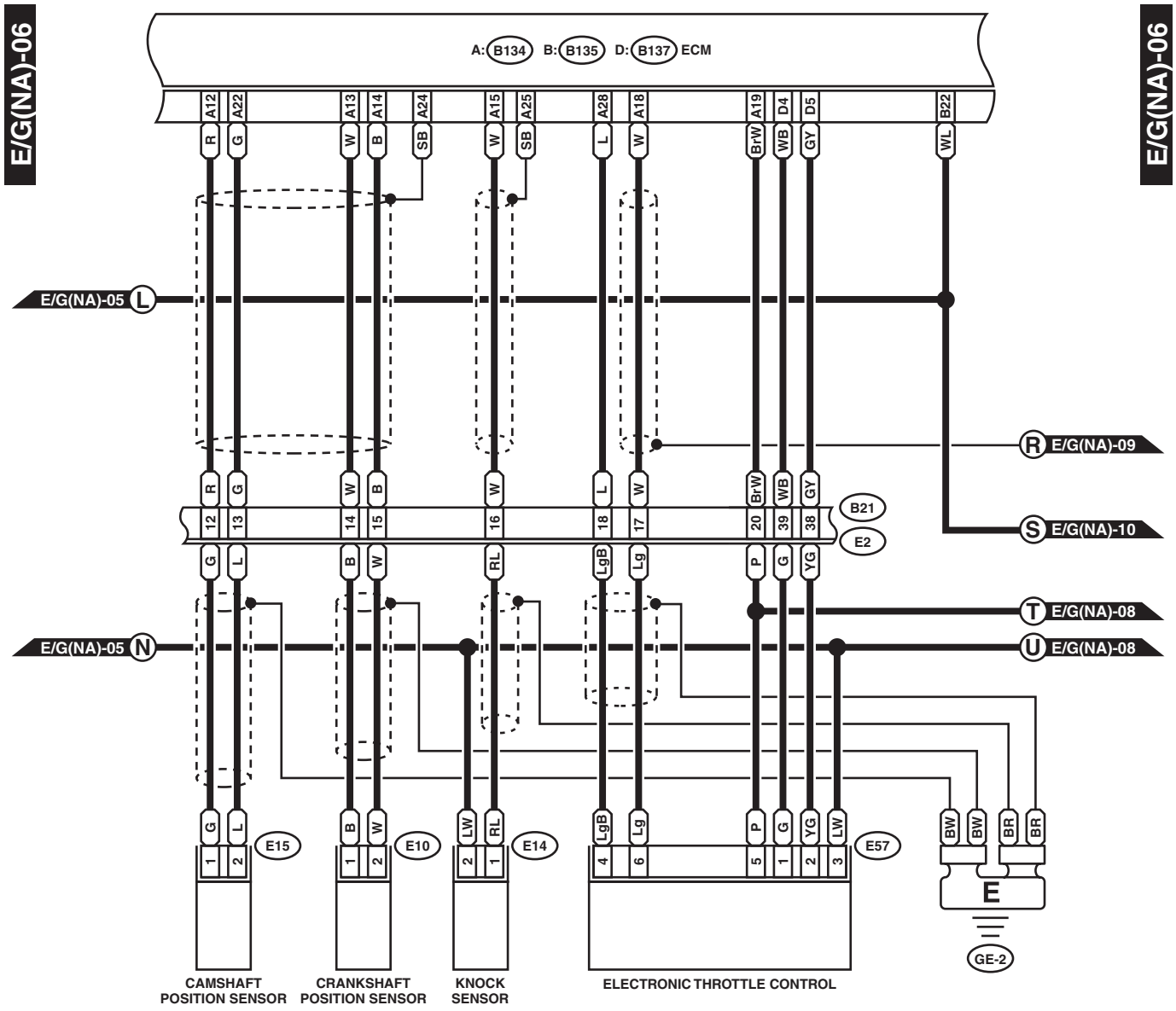
E/G(NA)-06
A: B134 B: B135 D: B137 ECM
A12 A22 A13 A14 A24 A15 A25 A28 A18 A19 D4 D5 B22
R G W B SB W SB L W BrW WB GY WL
E/G(NA)-05 L
R E/G(NA)-09
B21
E2
S E/G(NA)-10
T E/G(NA)-08
U E/G(NA)-08
E/G(NA)-05 N
12 13 14 15 16 18 17 20 39 38
G L B W RL LgB Lg P G YG
E15 E10 E14 E57
LW
BW BW BR BR
E
GE-2
CAMSHAFT POSITION SENSOR
CRANKSHAFT POSITION SENSOR
KNOCK SENSOR
ELECTRONIC THROTTLE CONTROL
E10 (LIGHT GRAY)
E15 (BLACK)
E14 (GRAY)
E57 (BLACK)
D: B137
B21 (BLACK)
A: B134
B: B135
WI-21397

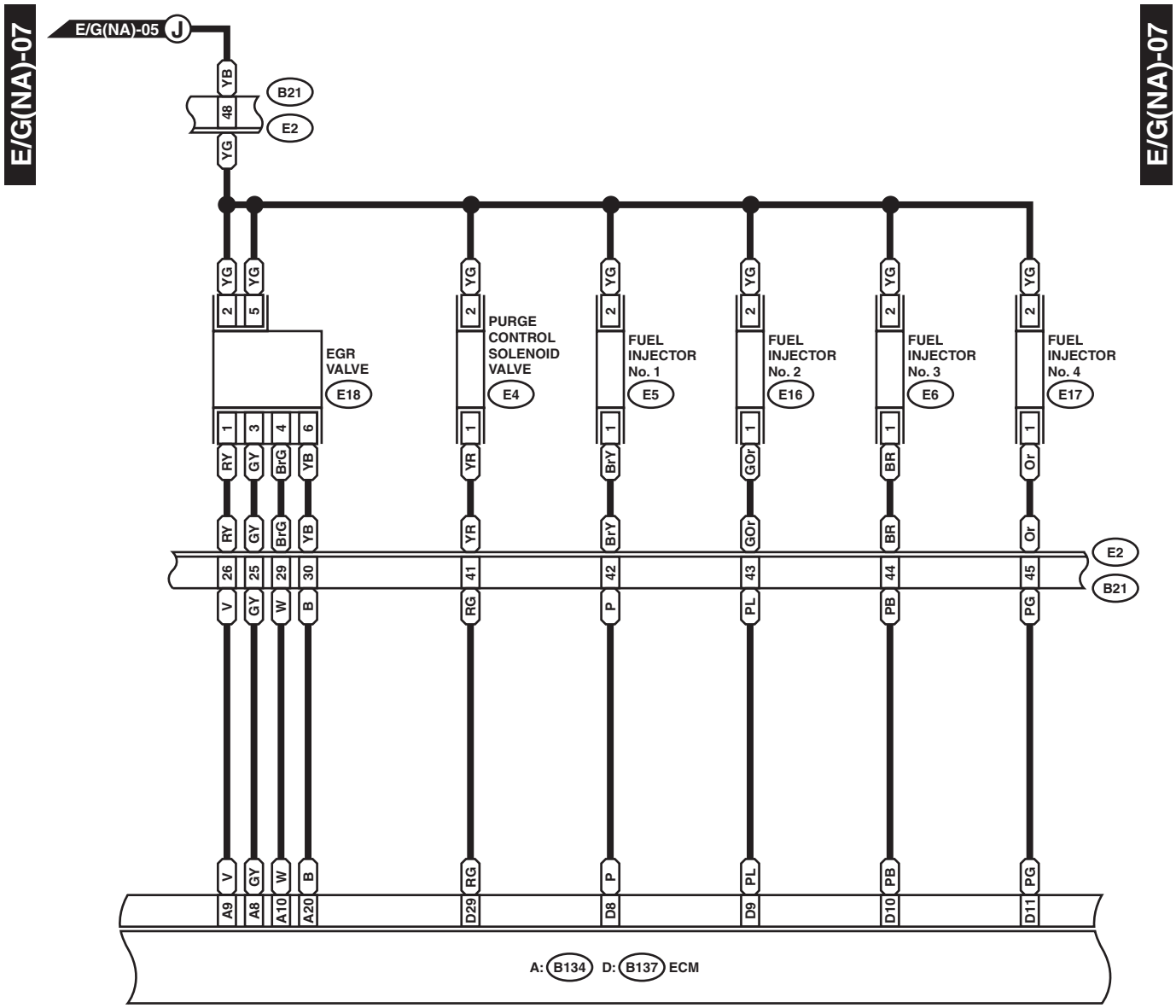
E/G(NA)-07
E/G(NA)-05 J
YB
48
YG
B21
E2
EGR VALVE
E18
PURGE CONTROL SOLENOID VALVE
E4
FUEL INJECTOR No. 1
E5
FUEL INJECTOR No. 2
E16
FUEL INJECTOR No. 3
E6
FUEL INJECTOR No. 4
E17
RY
GY
BrG
YB
YR
BrY
GOr
BR
Or
26
25
29
30
41
42
43
44
45
V
GY
W
B
RG
P
PL
PB
PG
A9
A8
A10
A20
D29
D8
D9
D10
D11
A: B134 D: B137 ECM

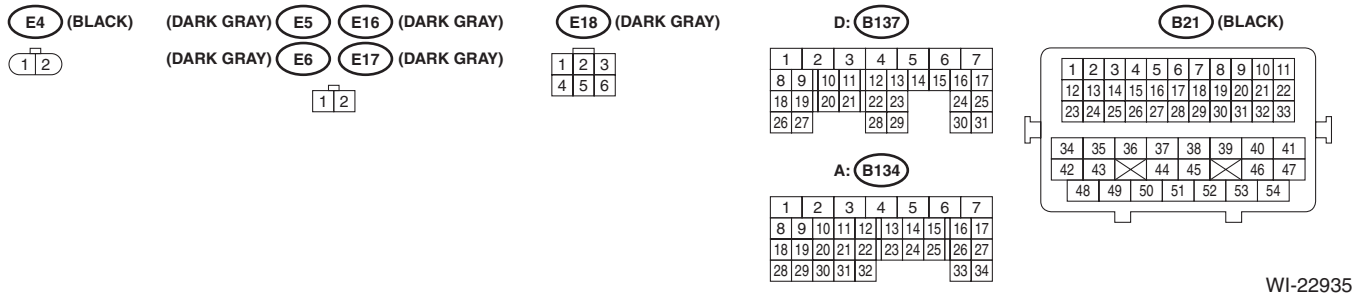
E4 (BLACK)
(DARK GRAY) E5
E16 (DARK GRAY)
(DARK GRAY) E6
E17 (DARK GRAY)
E18 (DARK GRAY)
D: B137
A: B134
B21 (BLACK)
WI-22935

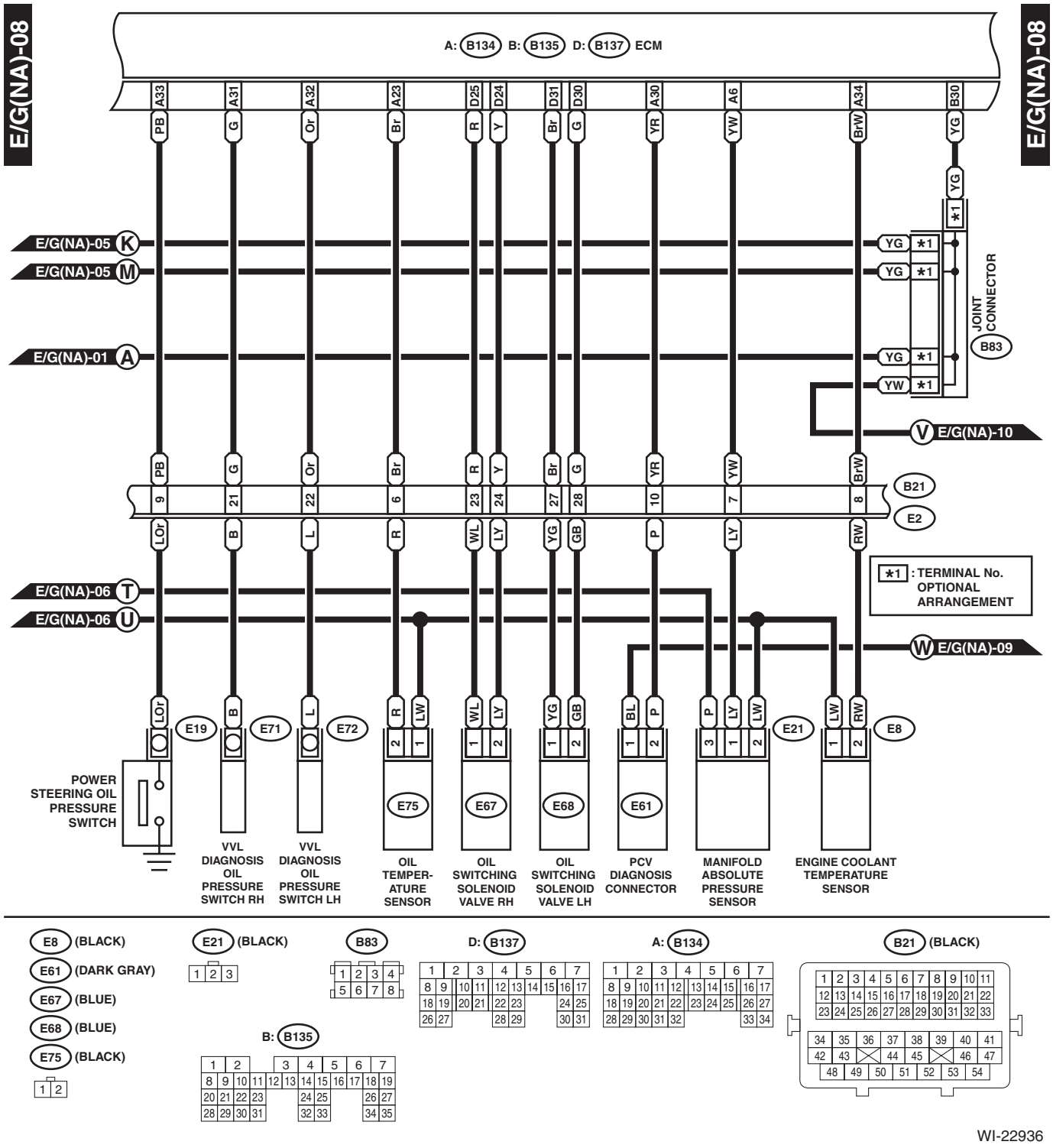
E/G(NA)-08
A: B134 B: B135 D: B137 ECM
A33 A31 A32 A23 D25 D24 D31 D30 A30 A6 A34 B30
PB G Or Br R Y Br G YR YW BrW YG
E/G(NA)-05 K
E/G(NA)-05 M
E/G(NA)-01 A
YG *1
YW *1
JOINT CONNECTOR
B83
V E/G(NA)-10
9 21 22 6 23 24 27 28 10 7 8
B21
E2
LOr B L R WL LY YG GB P LY RW
*1 : TERMINAL No. OPTIONAL ARRANGEMENT
E/G(NA)-06 T
E/G(NA)-06 U
W E/G(NA)-09
E19 E71 E72 E75 E67 E68 E61 E21 E8
POWER STEERING OIL PRESSURE SWITCH
VVL DIAGNOSIS OIL PRESSURE SWITCH RH
VVL DIAGNOSIS OIL PRESSURE SWITCH LH
OIL TEMPER-ATURE SENSOR
OIL SWITCHING SOLENOID VALVE RH
OIL SWITCHING SOLENOID VALVE LH
PCV DIAGNOSIS CONNECTOR
MANIFOLD ABSOLUTE PRESSURE SENSOR
ENGINE COOLANT TEMPERATURE SENSOR
E8 (BLACK)
E61 (DARK GRAY)
E67 (BLUE)
E68 (BLUE)
E75 (BLACK)
E21 (BLACK)
B83
D: B137
A: B134
B21 (BLACK)
B: B135
WI-22936

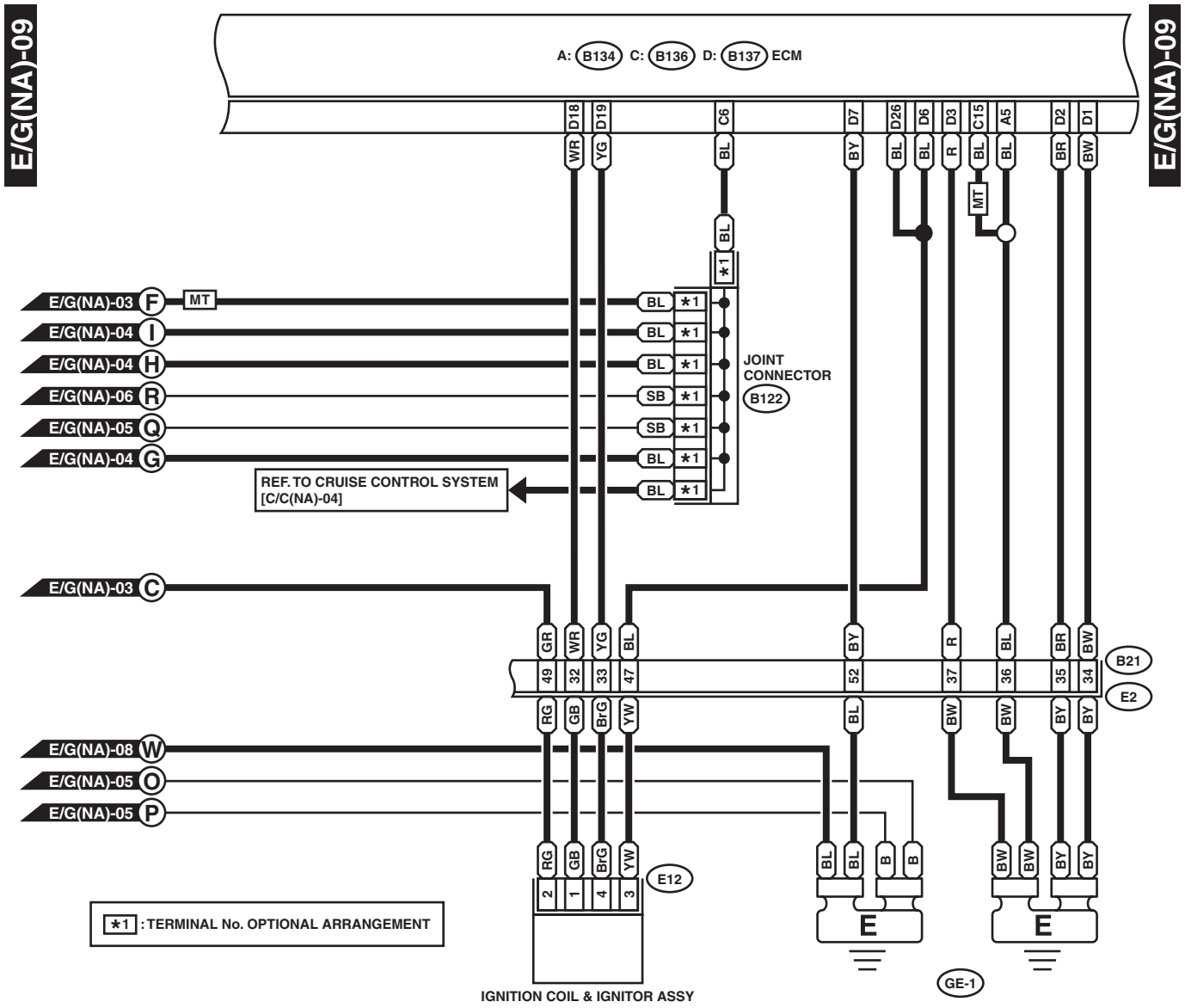
E/G(NA)-09
A: B134 C: B136 D: B137 ECM
D18 D19 C6 D7 D26 D6 D3 C15 A5 D2 D1
WR YG BL BY BL BL R BL BL BR BW
MT
*1
E/G(NA)-03 F
E/G(NA)-04 I
E/G(NA)-04 H
E/G(NA)-06 R
E/G(NA)-05 Q
E/G(NA)-04 G
JOINT CONNECTOR
B122
REF. TO CRUISE CONTROL SYSTEM [C/C(NA)-04]
E/G(NA)-03 C
GR WR YG BL BY R BL BR BW
49 32 33 47 52 37 36 35 34
B21
E2
RG GB BrG YW BL BW BW BY BY
E/G(NA)-08 W
E/G(NA)-05 O
E/G(NA)-05 P
RG GB BrG YW
2 1 4 3
E12
BL BL B B BW BW BY BY
E
GE-1
*1 : TERMINAL No. OPTIONAL ARRANGEMENT
IGNITION COIL & IGNITOR ASSY
E12 (DARK GRAY)
B21 (BLACK)
B122
D: B137
A: B134
C: B136
WI-22937

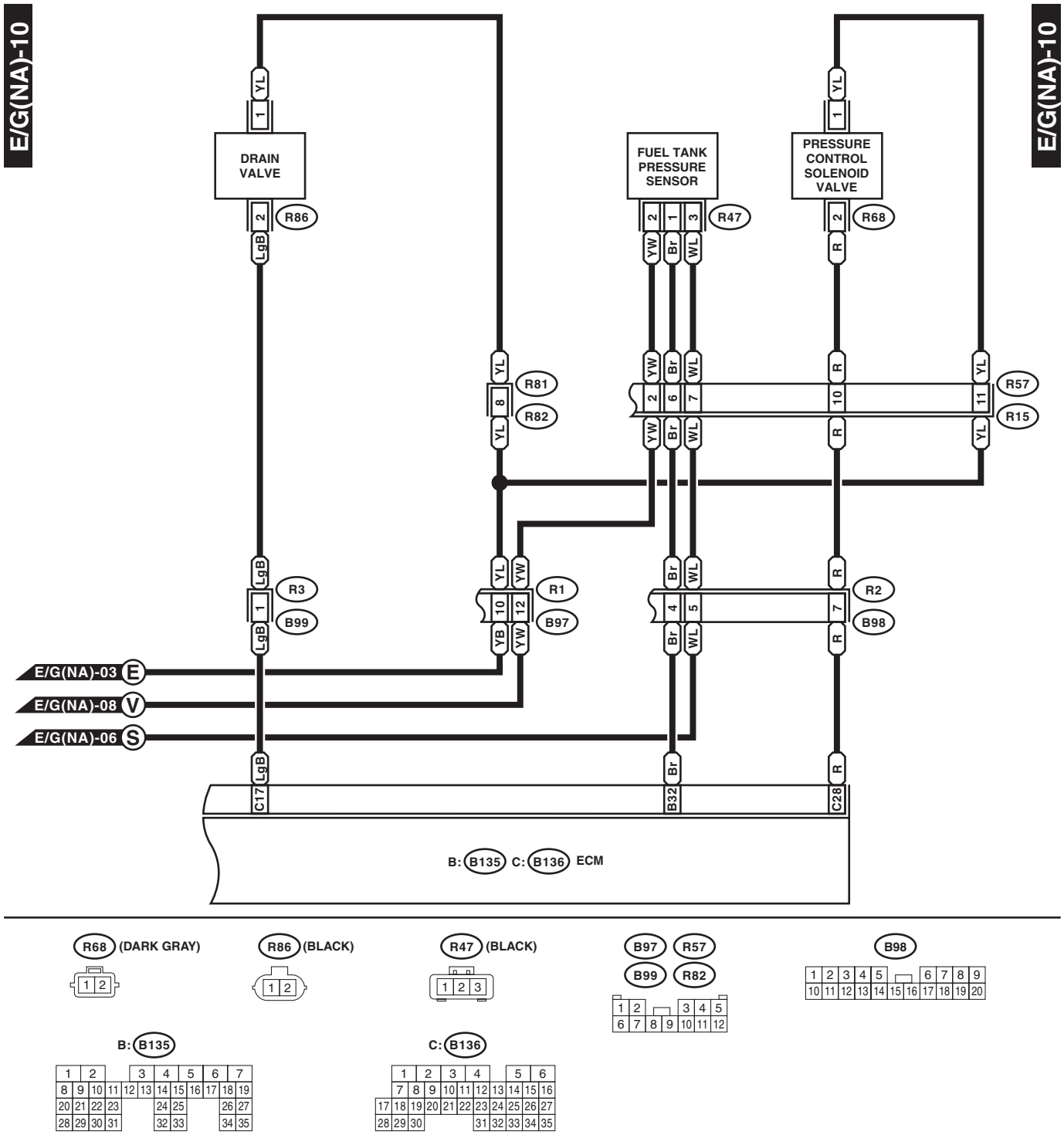
E/G(NA)-10
E/G(NA)-10
DRAIN VALVE
FUEL TANK PRESSURE SENSOR
PRESSURE CONTROL SOLENOID VALVE
R86
R47
R68
R81
R82
R57
R15
R3
B99
R1
B97
R2
B98
E/G(NA)-03 E
E/G(NA)-08 V
E/G(NA)-06 S
C17
B32
C28
B: B135 C: B136 ECM
R68 (DARK GRAY)
R86 (BLACK)
R47 (BLACK)
B97 R57
B99 R82
B98
B: B135
C: B136
WI-21398

2. TURBO MODEL

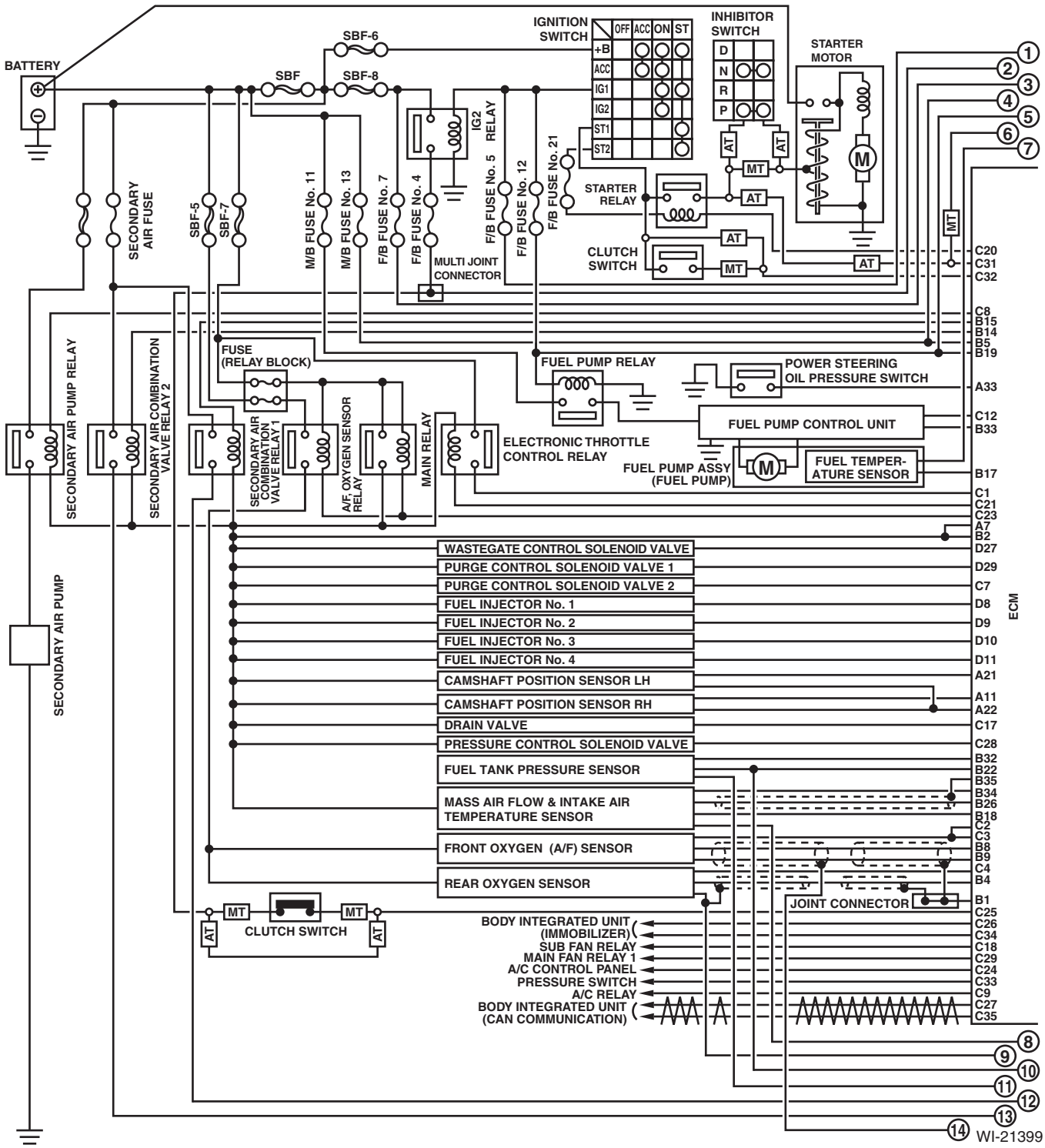

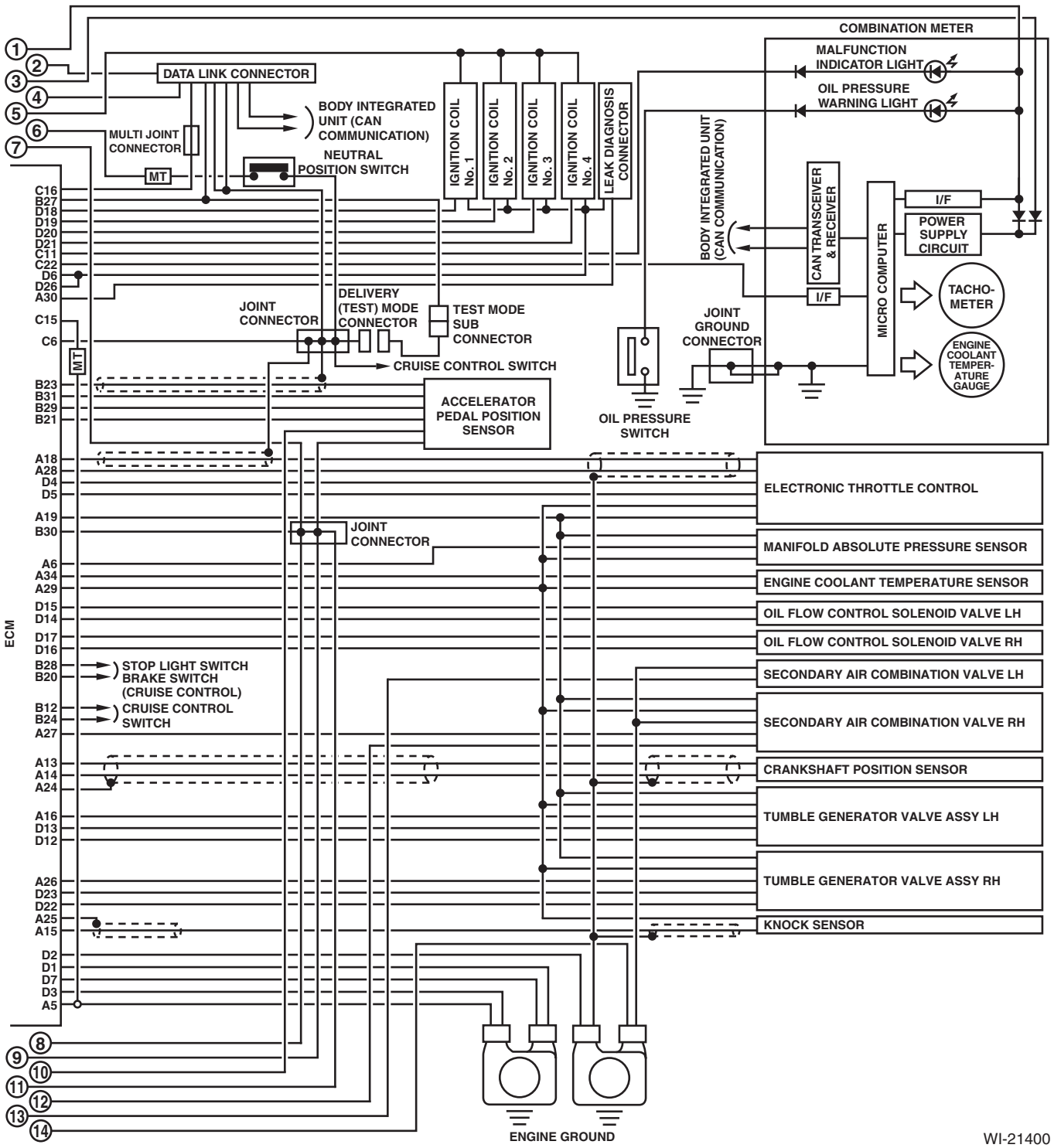
COMBINATION METER
MALFUNCTION INDICATOR LIGHT
OIL PRESSURE WARNING LIGHT
DATA LINK CONNECTOR
BODY INTEGRATED UNIT (CAN COMMUNICATION)
MULTI JOINT CONNECTOR
MT
NEUTRAL POSITION SWITCH
IGNITION COIL No. 1
IGNITION COIL No. 2
IGNITION COIL No. 3
IGNITION COIL No. 4
LEAK DIAGNOSIS CONNECTOR
BODY INTEGRATED UNIT (CAN COMMUNICATION)
CAN TRANSCEIVER & RECEIVER
MICRO COMPUTER
I/F
POWER SUPPLY CIRCUIT
TACHO-METER
ENGINE COOLANT TEMPER-ATURE GAUGE
JOINT CONNECTOR
DELIVERY (TEST) MODE CONNECTOR
TEST MODE SUB CONNECTOR
CRUISE CONTROL SWITCH
JOINT GROUND CONNECTOR
OIL PRESSURE SWITCH
ACCELERATOR PEDAL POSITION SENSOR
ECM
STOP LIGHT SWITCH
BRAKE SWITCH (CRUISE CONTROL)
CRUISE CONTROL SWITCH
ELECTRONIC THROTTLE CONTROL
MANIFOLD ABSOLUTE PRESSURE SENSOR
ENGINE COOLANT TEMPERATURE SENSOR
OIL FLOW CONTROL SOLENOID VALVE LH
OIL FLOW CONTROL SOLENOID VALVE RH
SECONDARY AIR COMBINATION VALVE LH
SECONDARY AIR COMBINATION VALVE RH
CRANKSHAFT POSITION SENSOR
TUMBLE GENERATOR VALVE ASSY LH
TUMBLE GENERATOR VALVE ASSY RH
KNOCK SENSOR
ENGINE GROUND
WI-21400

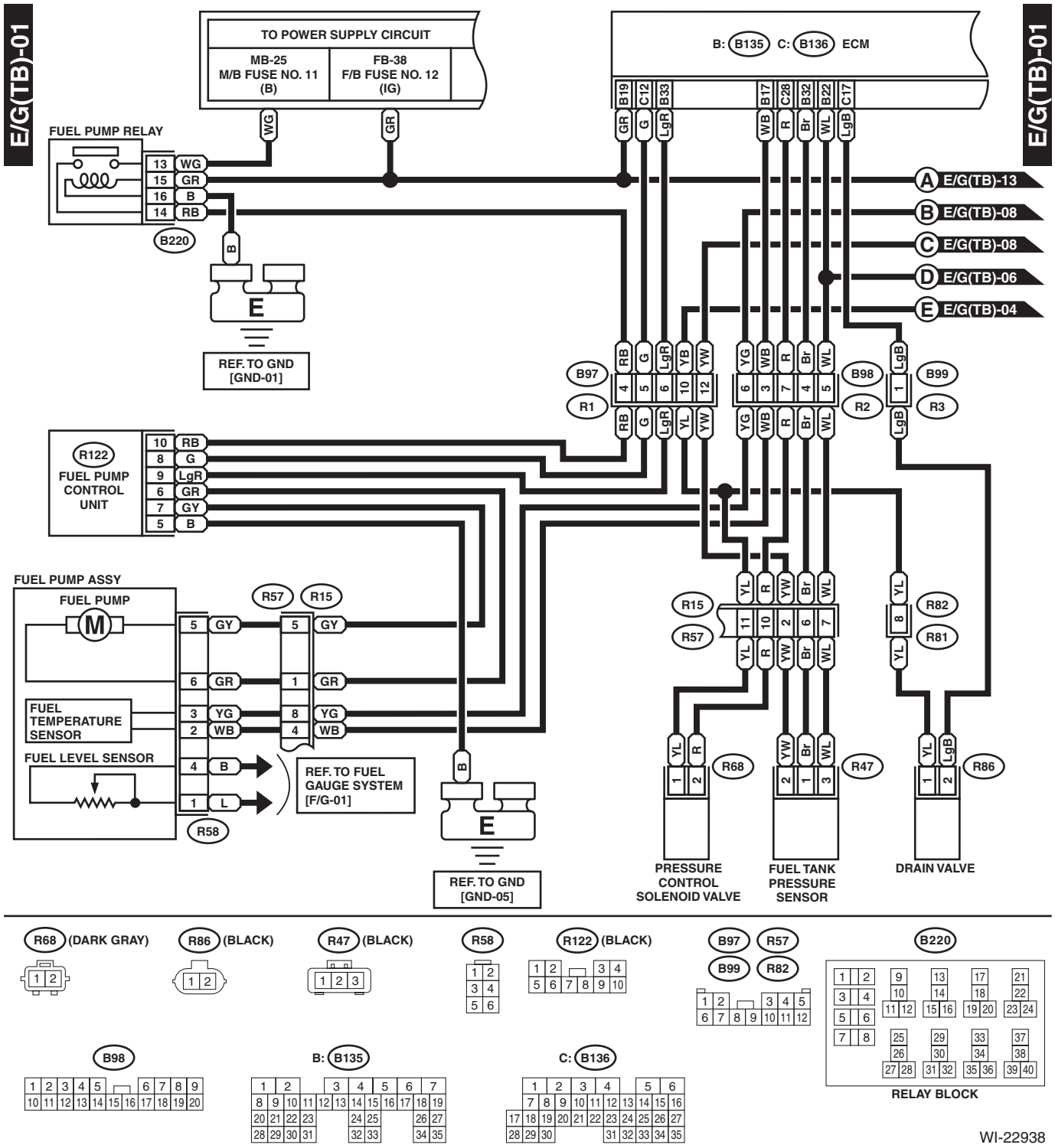
E/G(TB)-01
TO POWER SUPPLY CIRCUIT
MB-25
M/B FUSE NO. 11
(B)
FB-38
F/B FUSE NO. 12
(IG)
B: B135 C: B136 ECM
FUEL PUMP RELAY
B220
REF. TO GND
[GND-01]
A E/G(TB)-13
B E/G(TB)-08
C E/G(TB)-08
D E/G(TB)-06
E E/G(TB)-04
B97
R1
B98
R2
B99
R3
R122
FUEL PUMP
CONTROL
UNIT
FUEL PUMP ASSY
FUEL PUMP
FUEL
TEMPERATURE
SENSOR
FUEL LEVEL SENSOR
R57
R15
R58
REF. TO FUEL
GAUGE SYSTEM
[F/G-01]
REF. TO GND
[GND-05]
R68
R47
R86
R82
R81
PRESSURE
CONTROL
SOLENOID VALVE
FUEL TANK
PRESSURE
SENSOR
DRAIN VALVE

R68 (DARK GRAY)
R86 (BLACK)
R47 (BLACK)
R58
R122 (BLACK)
B97 R57
B99 R82
B220
RELAY BLOCK
B98
B: B135
C: B136
WI-22938

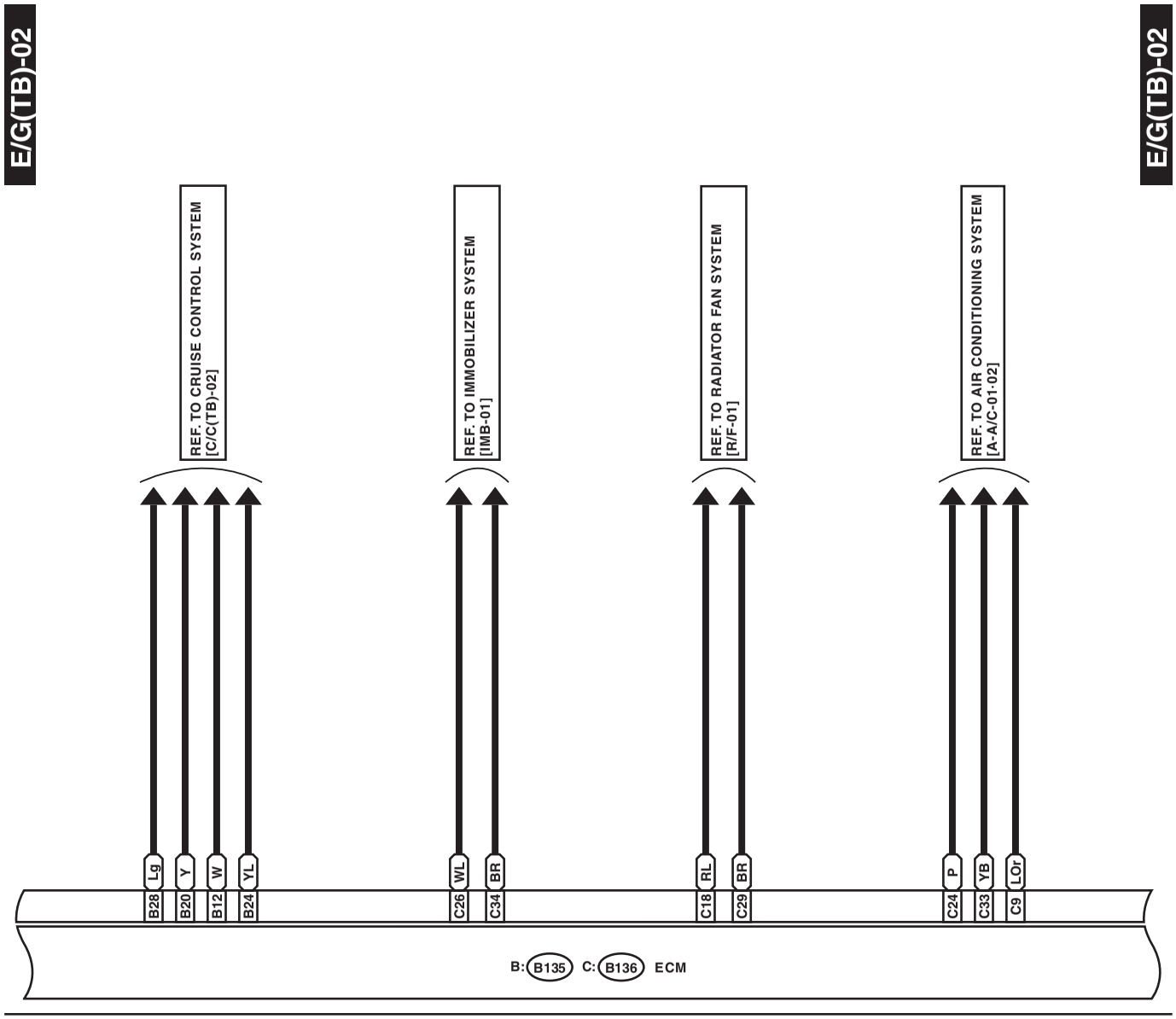
E/G(TB)-02
E/G(TB)-02
REF. TO CRUISE CONTROL SYSTEM [C/C(TB)-02]
REF. TO IMMOBILIZER SYSTEM [IMB-01]
REF. TO RADIATOR FAN SYSTEM [R/F-01]
REF. TO AIR CONDITIONING SYSTEM [A-A/C-01-02]
Lg
Y
W
YL
WL
BR
RL
BR
P
YB
LOr
B28
B20
B12
B24
C26
C34
C18
C29
C24
C33
C9
B: B135 C: B136 ECM

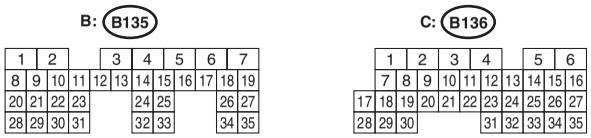
B: B135
C: B136

WI-16883

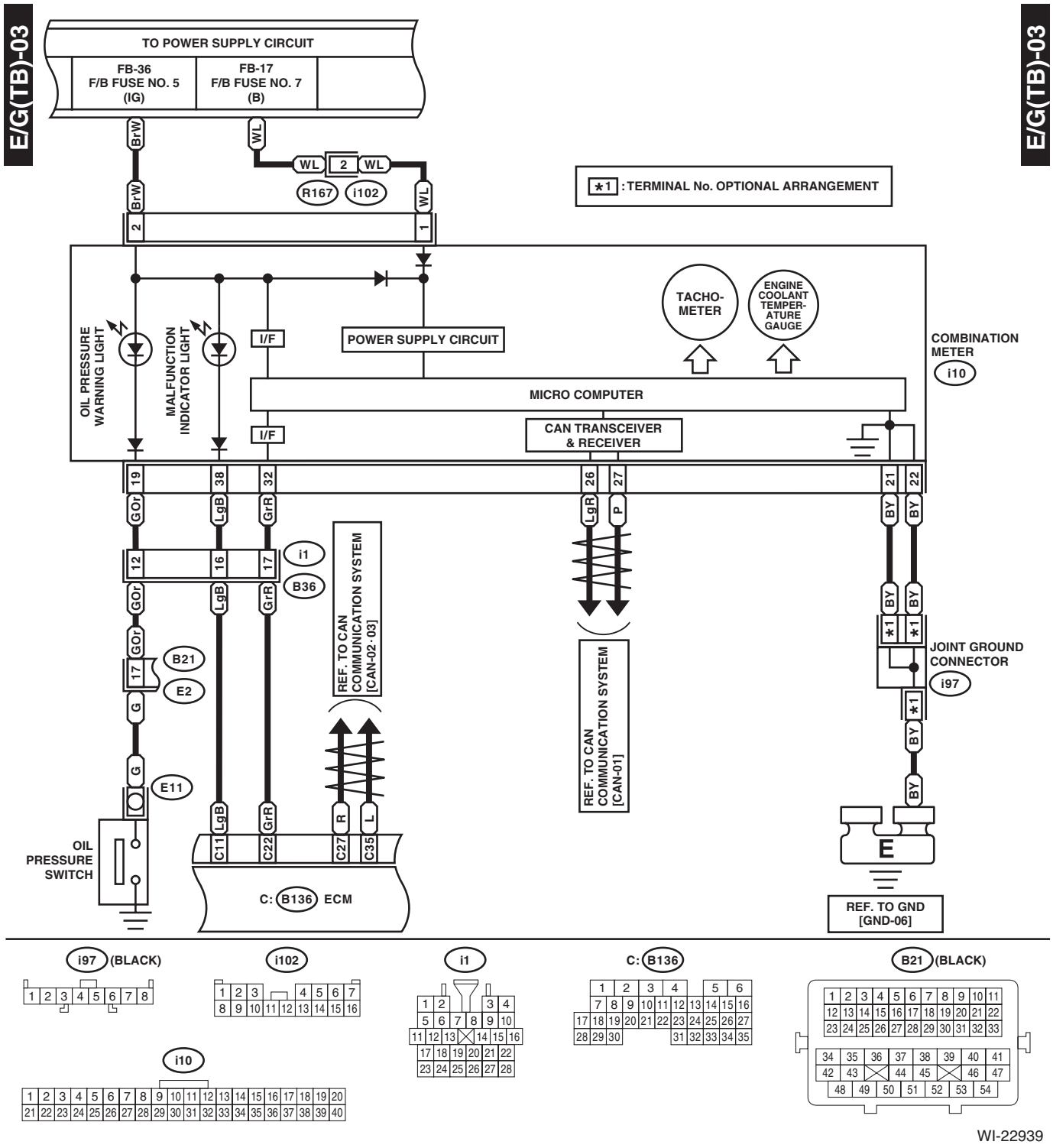
E/G(TB)-03
TO POWER SUPPLY CIRCUIT
FB-36
F/B FUSE NO. 5
(IG)
FB-17
F/B FUSE NO. 7
(B)
BrW
WL
R167
i102
*1 : TERMINAL No. OPTIONAL ARRANGEMENT
OIL PRESSURE WARNING LIGHT
MALFUNCTION INDICATOR LIGHT
I/F
POWER SUPPLY CIRCUIT
TACHO-METER
ENGINE COOLANT TEMPER-ATURE GAUGE
COMBINATION METER
i10
MICRO COMPUTER
CAN TRANSCEIVER & RECEIVER
GOr
LgB
GrR
LgR
P
BY
i1
B36
B21
E2
E11
REF. TO CAN COMMUNICATION SYSTEM [CAN-02 · 03]
REF. TO CAN COMMUNICATION SYSTEM [CAN-01]
JOINT GROUND CONNECTOR
i97
OIL PRESSURE SWITCH
C: B136 ECM
REF. TO GND [GND-06]
i97 (BLACK)
i102
i1
C: B136
B21 (BLACK)
i10
WI-22939

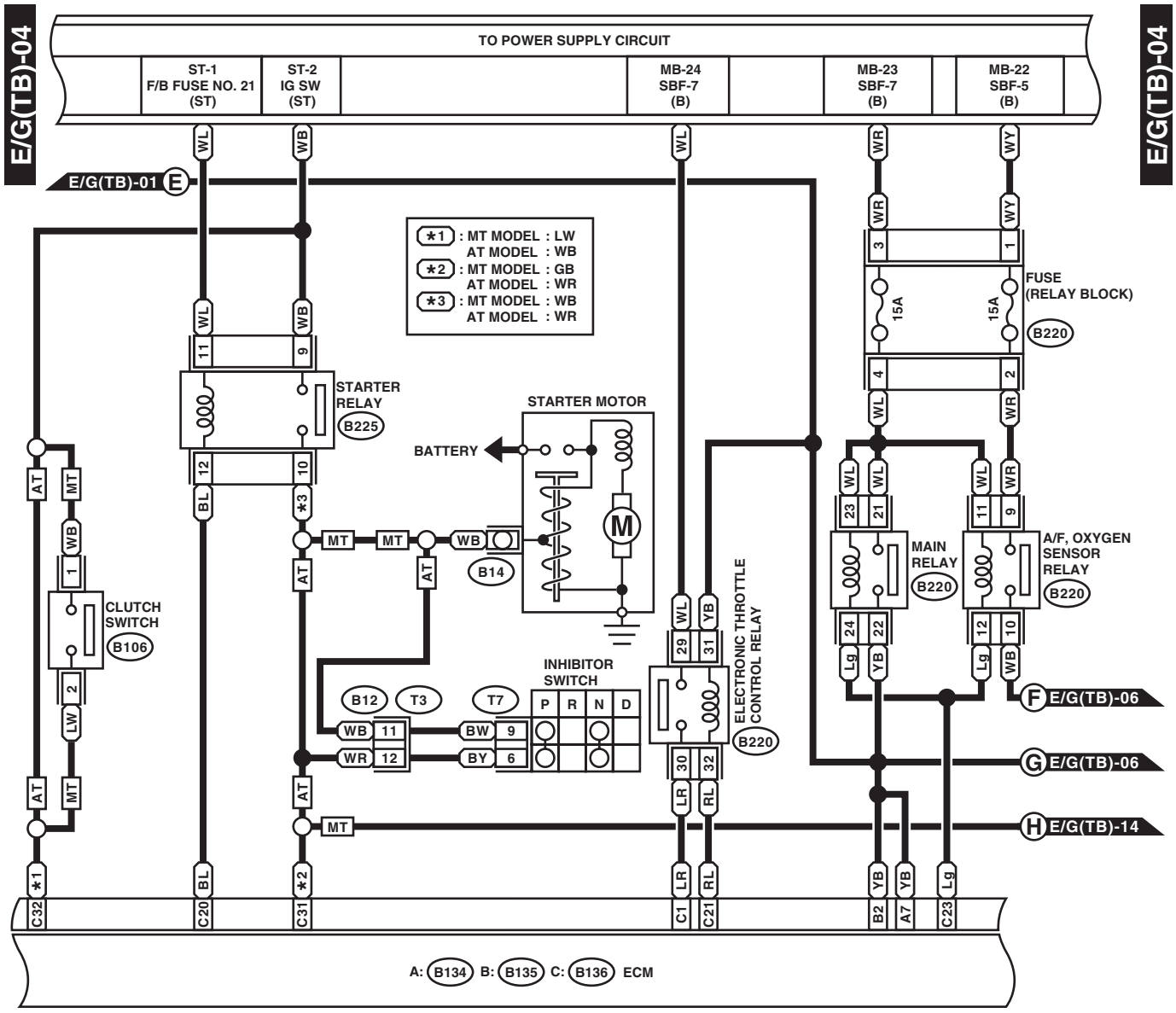
E/G(TB)-04
TO POWER SUPPLY CIRCUIT
ST-1
F/B FUSE NO. 21
(ST)
ST-2
IG SW
(ST)
MB-24
SBF-7
(B)
MB-23
SBF-7
(B)
MB-22
SBF-5
(B)
E/G(TB)-01 E
*1 : MT MODEL : LW
AT MODEL : WB
*2 : MT MODEL : GB
AT MODEL : WR
*3 : MT MODEL : WB
AT MODEL : WR
FUSE
(RELAY BLOCK)
B220
15A
15A
STARTER
RELAY
B225
STARTER MOTOR
BATTERY
B14
CLUTCH
SWITCH
B106
INHIBITOR
SWITCH
P R N D
B12 T3 T7
ELECTRONIC THROTTLE
CONTROL RELAY
MAIN
RELAY
A/F, OXYGEN
SENSOR
RELAY
F E/G(TB)-06
G E/G(TB)-06
H E/G(TB)-14
A: B134 B: B135 C: B136 ECM

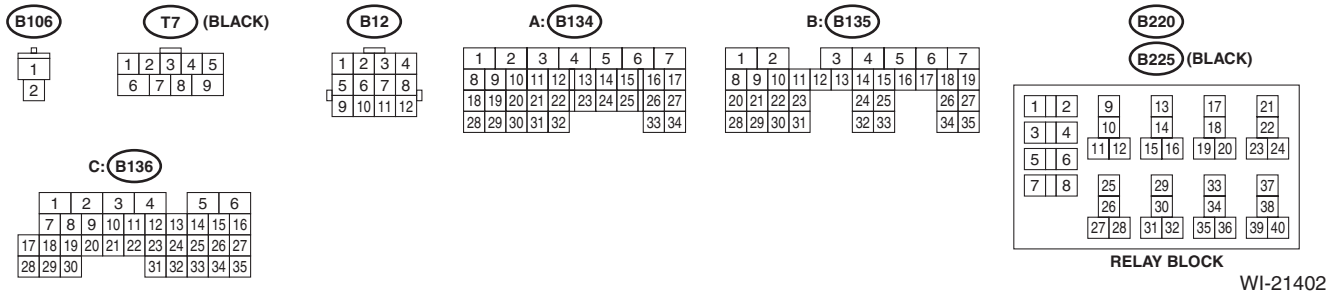
B106
T7 (BLACK)
B12
A: B134
B: B135
B220
B225 (BLACK)
C: B136
RELAY BLOCK

WI-21402

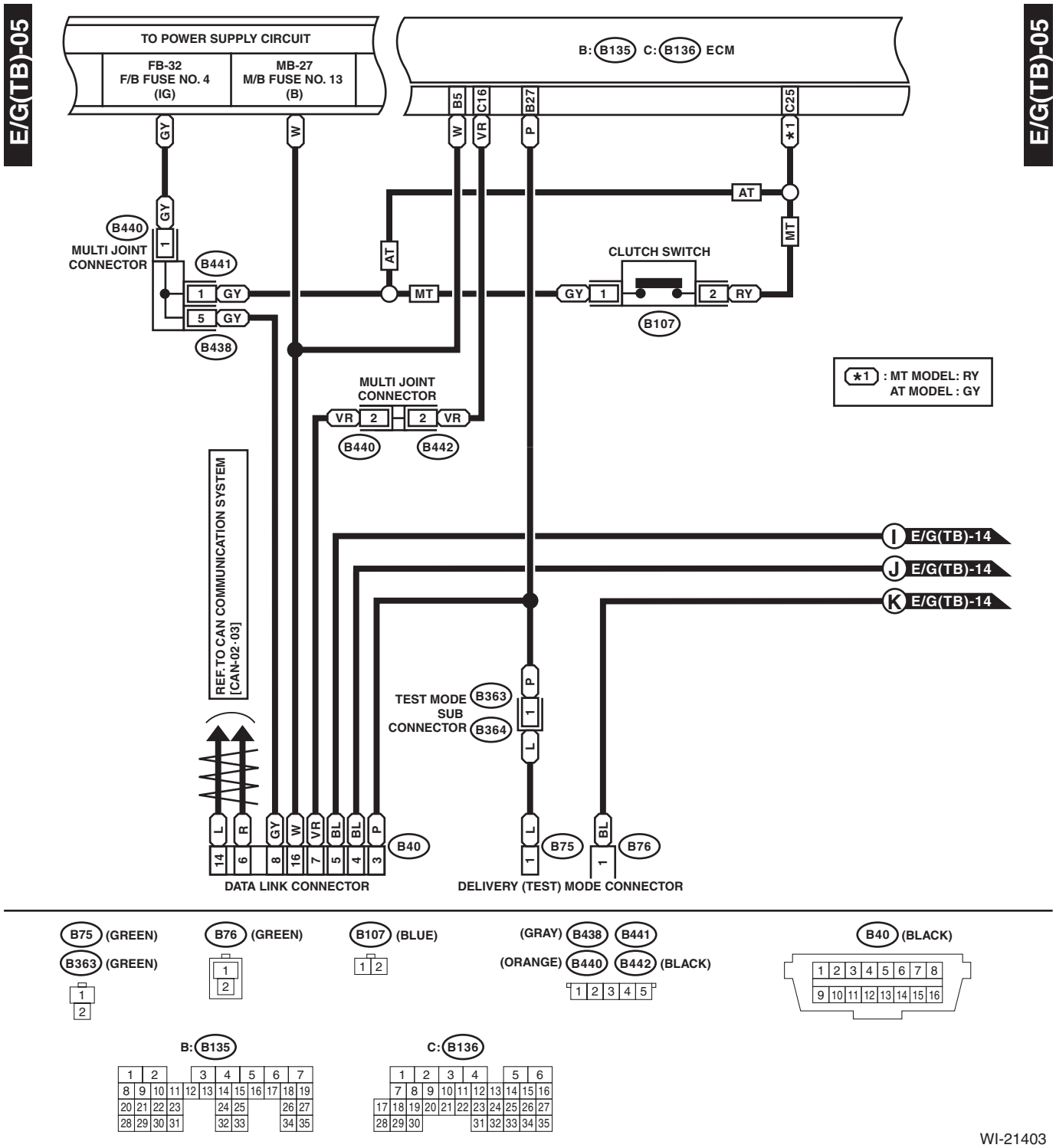
E/G(TB)-05
TO POWER SUPPLY CIRCUIT
FB-32
F/B FUSE NO. 4
(IG)
MB-27
M/B FUSE NO. 13
(B)
B: B135 C: B136 ECM
B5
C16
B27
C25
GY
W
VR
P
*1
AT
MT
B440
MULTI JOINT CONNECTOR
B441
B438
CLUTCH SWITCH
B107
RY
*1 : MT MODEL: RY
AT MODEL : GY
MULTI JOINT CONNECTOR
B442
REF. TO CAN COMMUNICATION SYSTEM [CAN-02 : 03]
E/G(TB)-14
TEST MODE SUB CONNECTOR
B363
B364
L
R
BL
B40
B75
B76
DATA LINK CONNECTOR
DELIVERY (TEST) MODE CONNECTOR
B75 (GREEN)
B363 (GREEN)
B76 (GREEN)
B107 (BLUE)
(GRAY) B438 B441
(ORANGE) B440 B442 (BLACK)
B40 (BLACK)
B: B135
C: B136
WI-21403

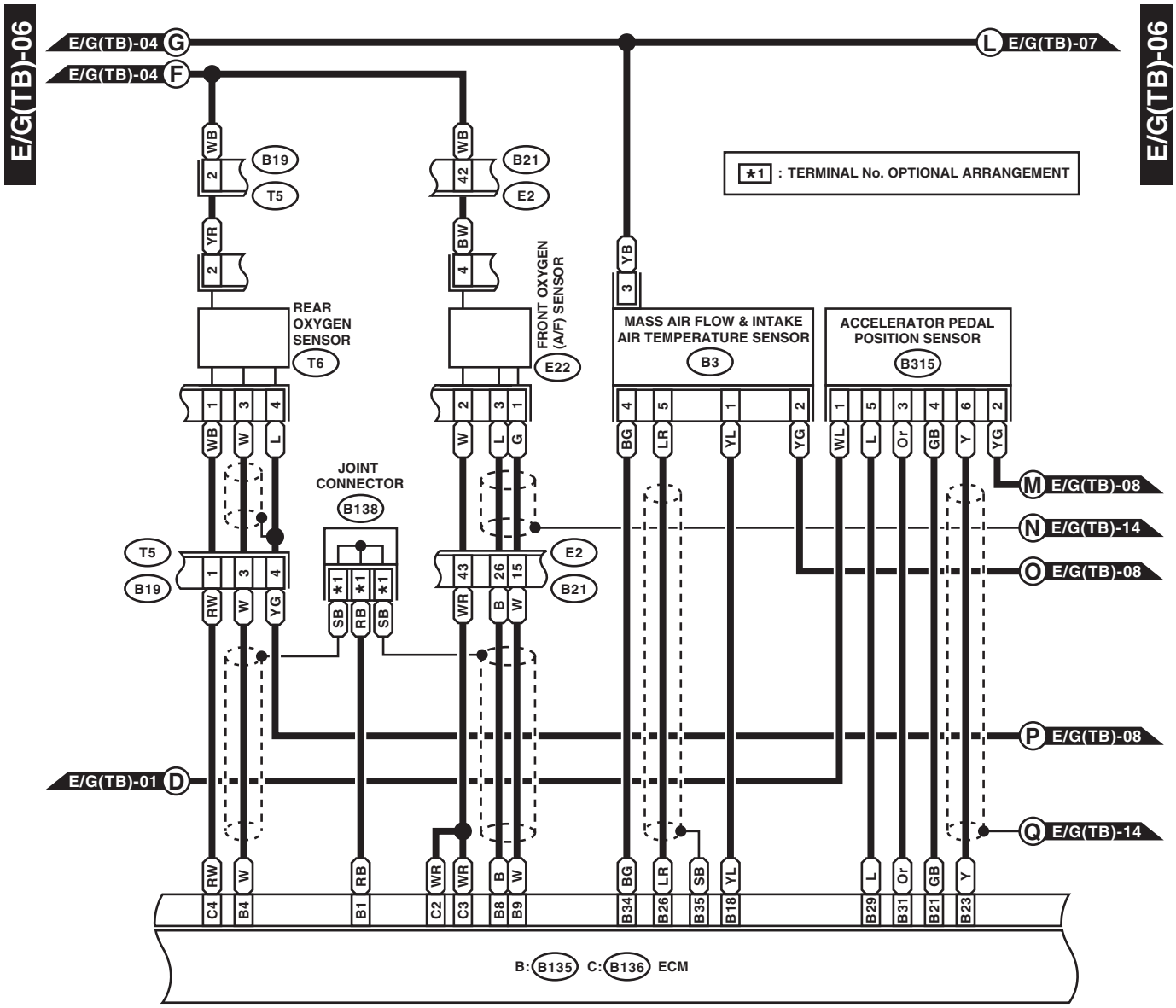
E/G(TB)-06
E/G(TB)-04 G
E/G(TB)-04 F
E/G(TB)-07 L
E/G(TB)-06
*1 : TERMINAL No. OPTIONAL ARRANGEMENT
B19
T5
B21
E2
REAR OXYGEN SENSOR
T6
FRONT OXYGEN (A/F) SENSOR
E22
MASS AIR FLOW & INTAKE AIR TEMPERATURE SENSOR
B3
ACCELERATOR PEDAL POSITION SENSOR
B315
JOINT CONNECTOR
B138
E/G(TB)-08 M
E/G(TB)-14 N
E/G(TB)-08 O
E/G(TB)-08 P
E/G(TB)-01 D
E/G(TB)-14 Q
B: B135 C: B136 ECM

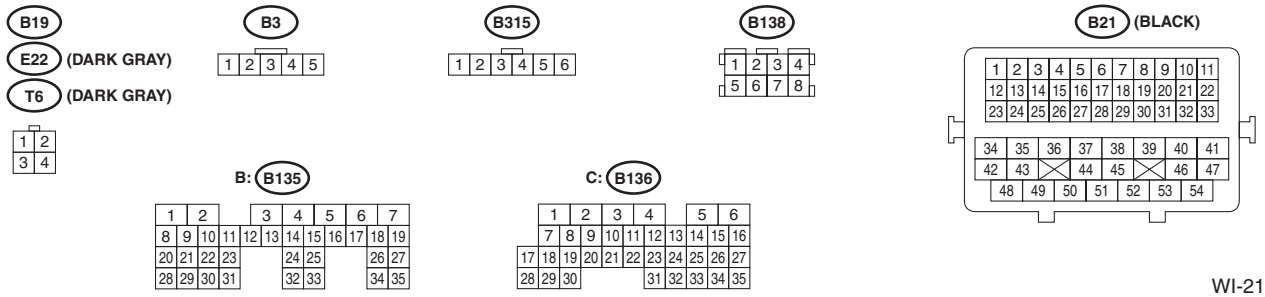
B19
E22 (DARK GRAY)
T6 (DARK GRAY)
B3
B315
B138
B21 (BLACK)
B: B135
C: B136

WI-21404

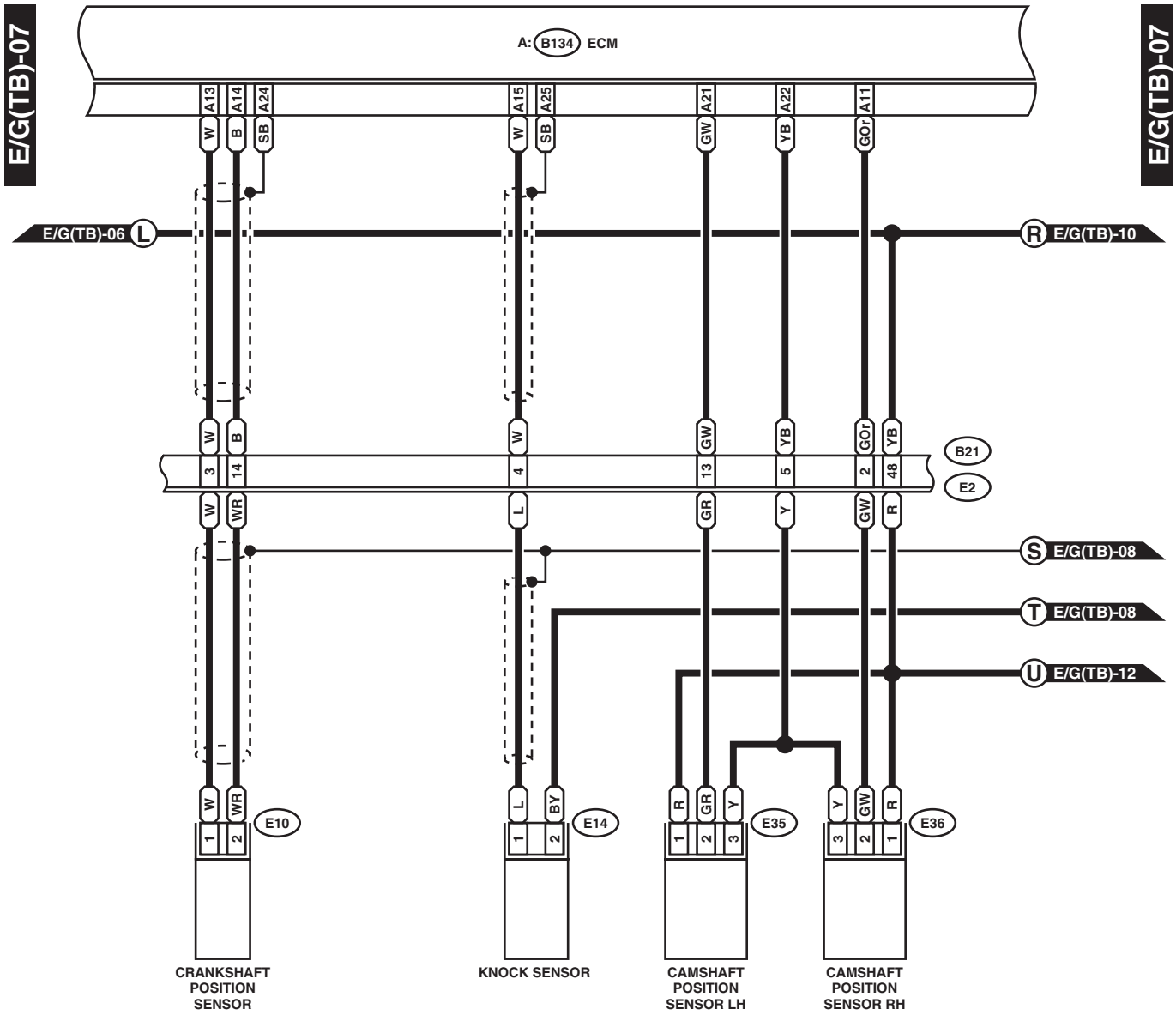

E10 (LIGHT GRAY)

E14 (LIGHT GRAY)

E35 (LIGHT GRAY)
E36 (LIGHT GRAY)

A: B134

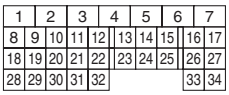

B21 (BLACK)

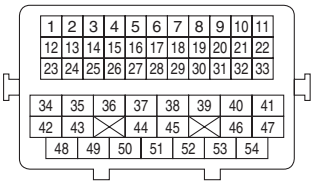

WI-22940

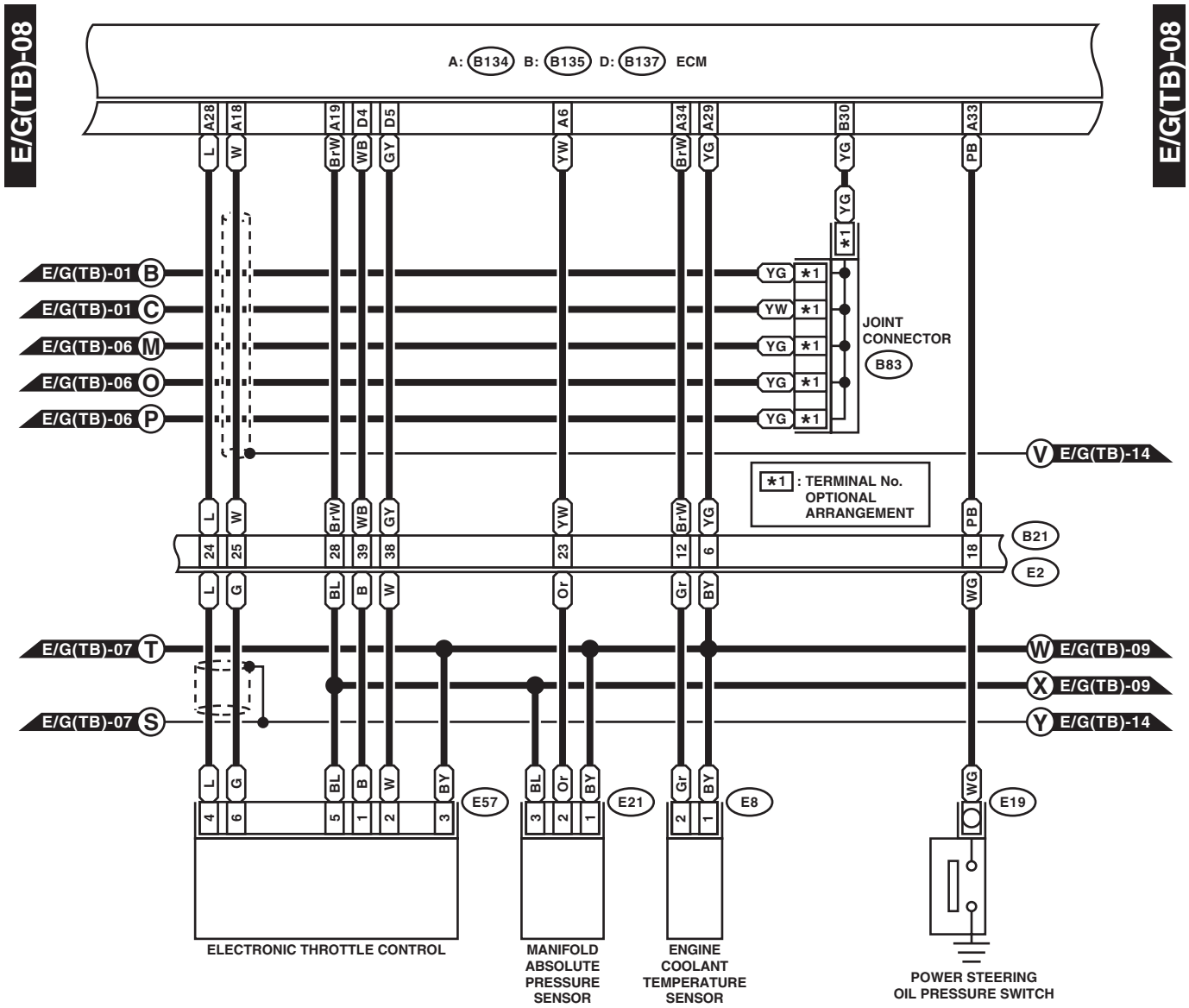
E/G(TB)-08
A: B134 B: B135 D: B137 ECM
A28 A18 A19 D4 D5 A6 A34 A29 B30 A33
L W BrW WB GY YW BrW YG YG PB
YG *1
E/G(TB)-01 B
E/G(TB)-01 C
E/G(TB)-06 M
E/G(TB)-06 O
E/G(TB)-06 P
YG *1
YW *1
YG *1
YG *1
YG *1
JOINT CONNECTOR
B83
V E/G(TB)-14
*1 : TERMINAL No. OPTIONAL ARRANGEMENT
24 25 28 39 38 23 12 6 18
B21
E2
L G BL B W Or Gr BY WG
E/G(TB)-07 T
E/G(TB)-07 S
W E/G(TB)-09
X E/G(TB)-09
Y E/G(TB)-14
4 6 5 1 2 3 3 2 1 2 1
E57
E21
E8
E19
ELECTRONIC THROTTLE CONTROL
MANIFOLD ABSOLUTE PRESSURE SENSOR
ENGINE COOLANT TEMPERATURE SENSOR
POWER STEERING OIL PRESSURE SWITCH

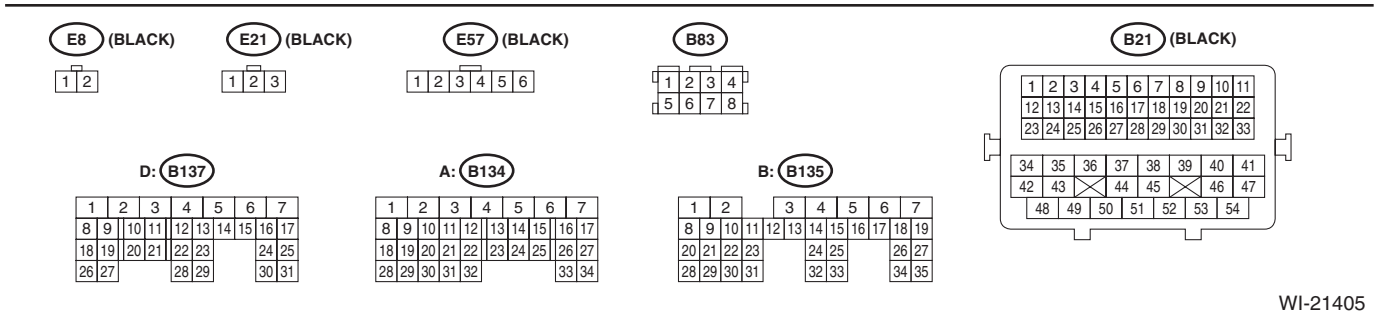
E8 (BLACK)
E21 (BLACK)
E57 (BLACK)
B83
B21 (BLACK)
D: B137
A: B134
B: B135

WI-21405

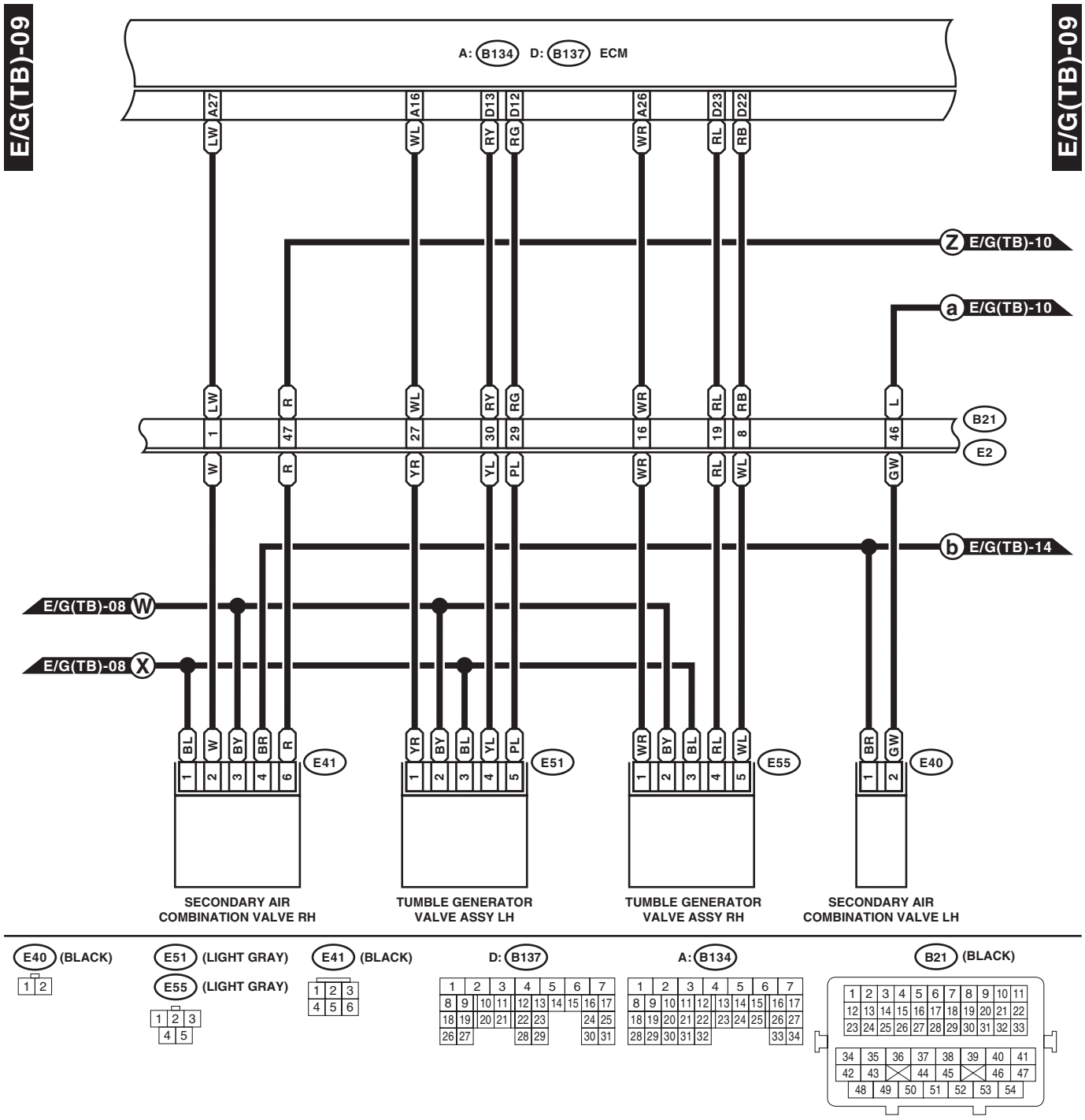
E/G(TB)-09
E/G(TB)-09
A: B134 D: B137 ECM
A27 A16 D13 D12 A26 D23 D22
LW WL RY RG WR RL RB
Z E/G(TB)-10
a E/G(TB)-10
LW R WL RY RG WR RL RB L
1 47 27 30 29 16 19 8 46
B21
E2
W R YR YL PL WR RL WL GW
b E/G(TB)-14
E/G(TB)-08 W
E/G(TB)-08 X
BL W BY BR R
1 2 3 4 6
E41
YR BY BL YL PL
1 2 3 4 5
E51
WR BY BL RL WL
1 2 3 4 5
E55
BR GW
1 2
E40
SECONDARY AIR COMBINATION VALVE RH
TUMBLE GENERATOR VALVE ASSY LH
TUMBLE GENERATOR VALVE ASSY RH
SECONDARY AIR COMBINATION VALVE LH
E40 (BLACK)
E51 (LIGHT GRAY)
E55 (LIGHT GRAY)
E41 (BLACK)
D: B137
A: B134
B21 (BLACK)
WI-22941

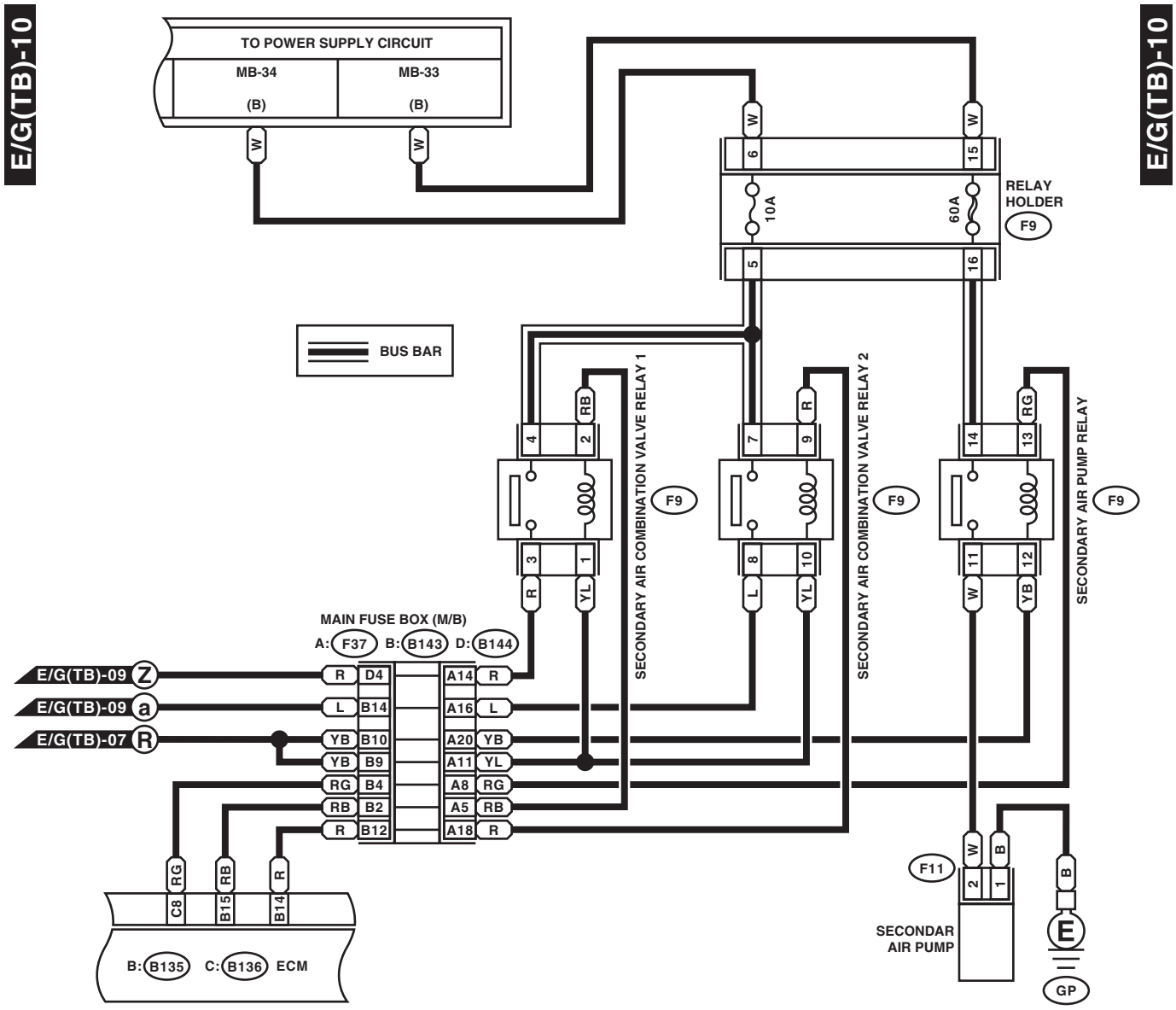
E/G(TB)-10
E/G(TB)-10
TO POWER SUPPLY CIRCUIT
MB-34
(B)
MB-33
(B)
W
W
W
W
6
15
10A
60A
RELAY HOLDER
F9
5
16
BUS BAR
RB
R
RG
4
2
7
9
14
13
F9
F9
F9
3
1
8
10
11
12
R
YL
L
YL
W
YB
SECONDARY AIR COMBINATION VALVE RELAY 1
SECONDARY AIR COMBINATION VALVE RELAY 2
SECONDARY AIR PUMP RELAY
MAIN FUSE BOX (M/B)
A: F37 B: B143 D: B144
E/G(TB)-09 Z
E/G(TB)-09 a
E/G(TB)-07 R
R D4
L B14
YB B10
YB B9
RG B4
RB B2
R B12
A14 R
A16 L
A20 YB
A11 YL
A8 RG
A5 RB
A18 R
RG
RB
R
C8
B15
B14
B: B135 C: B136 ECM
F11
W
B
2
1
B
SECONDAR AIR PUMP
E
GP

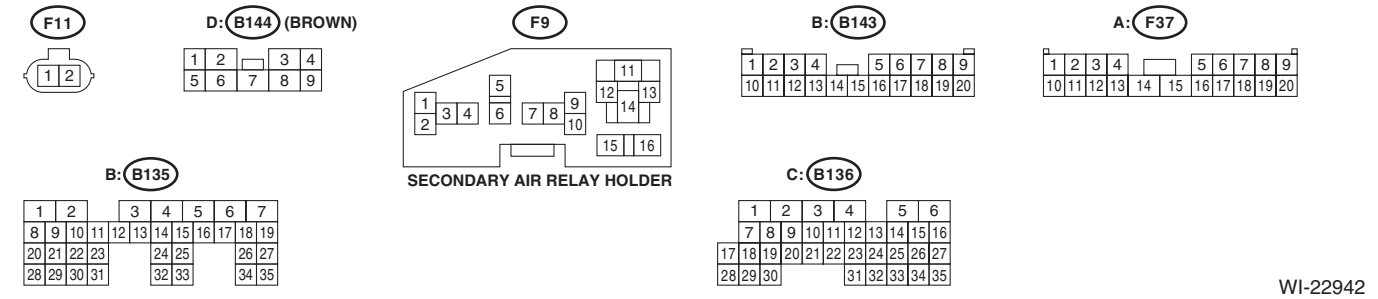
F11
D: B144 (BROWN)
F9
B: B143
A: F37
SECONDARY AIR RELAY HOLDER
B: B135
C: B136

WI-22942

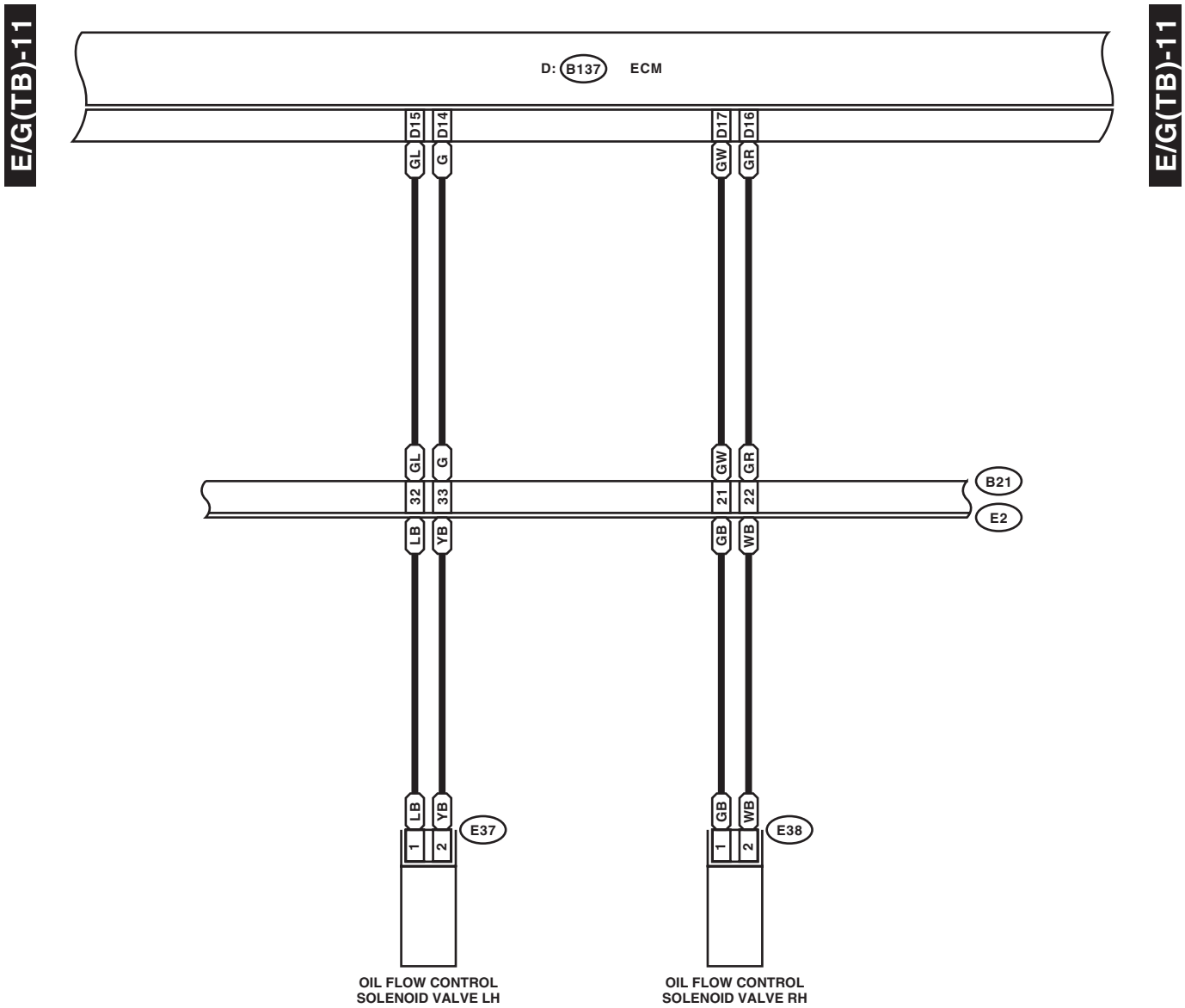
E/G(TB)-11
E/G(TB)-11
D: B137 ECM
D15
D14
D17
D16
GL
G
GW
GR
32
33
21
22
B21
E2
LB
YB
GB
WB
1
2
E37
E38
OIL FLOW CONTROL SOLENOID VALVE LH
OIL FLOW CONTROL SOLENOID VALVE RH

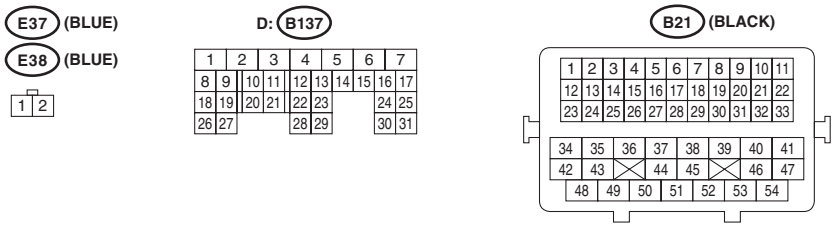
E37 (BLUE)
E38 (BLUE)
D: B137
B21 (BLACK)

WI-22943

E/G(TB)-12

E/G(TB)-12

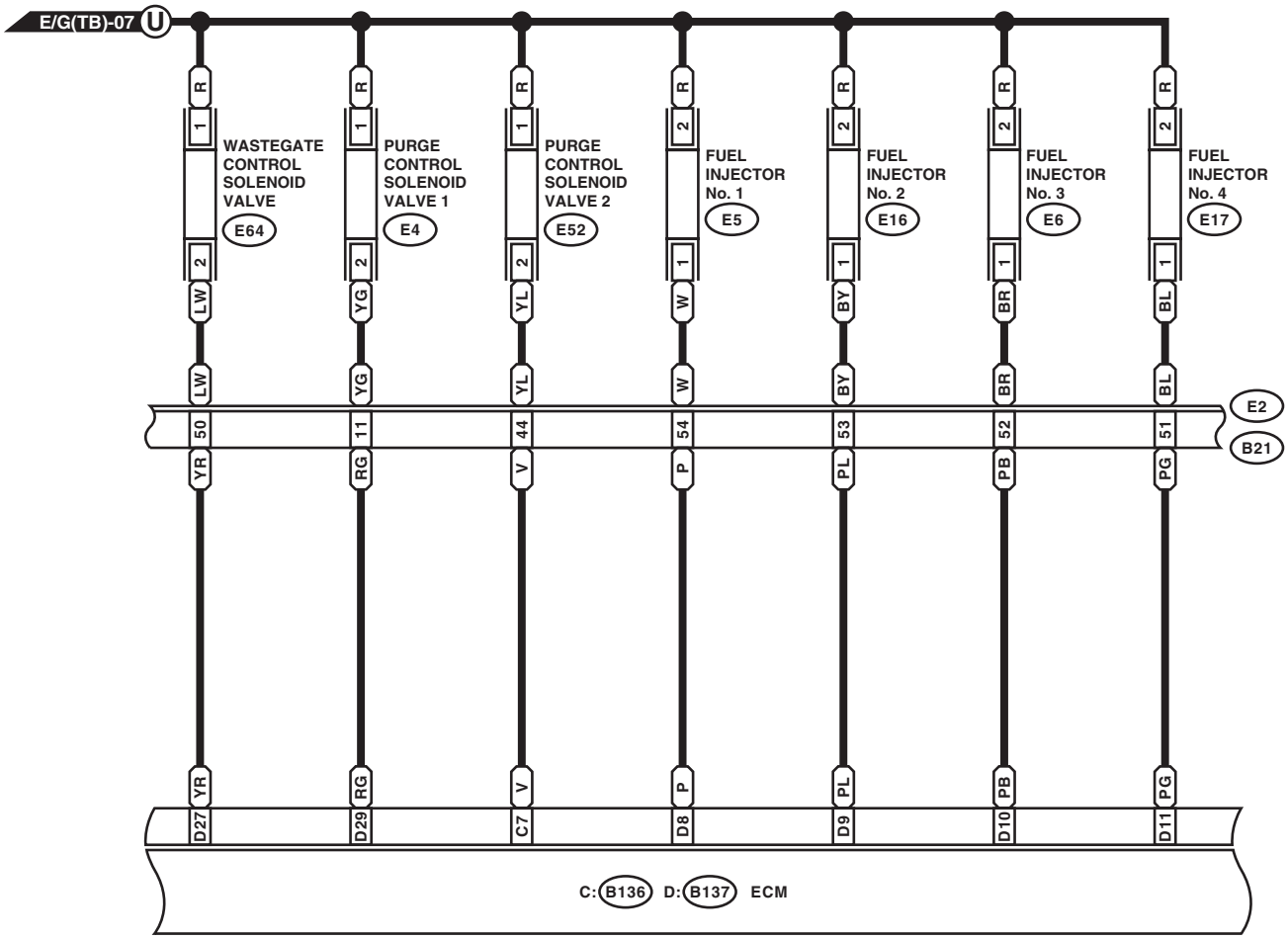

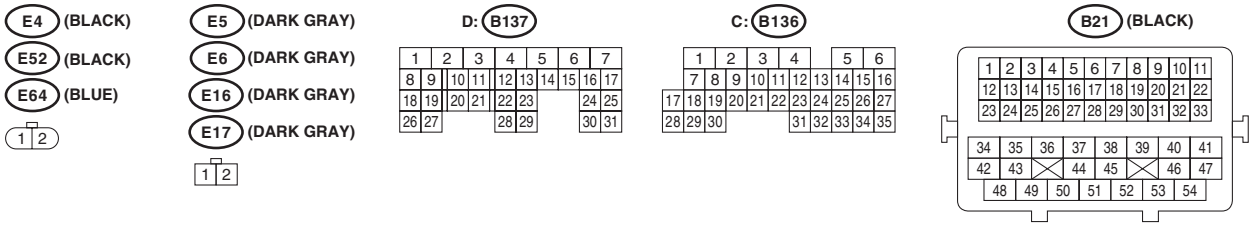

WI-22944

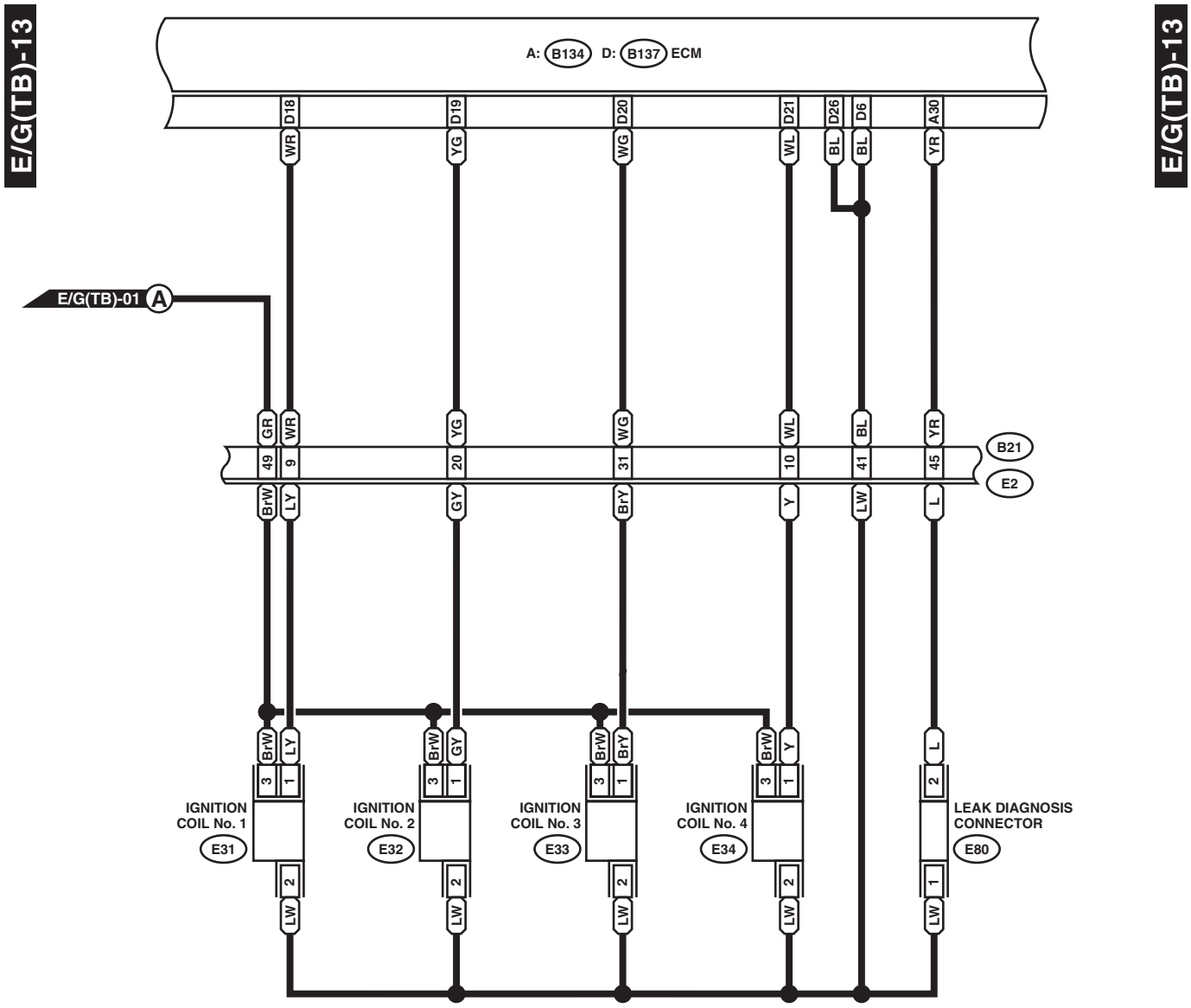
E/G(TB)-13
A: B134 D: B137 ECM
D18
D19
D20
D21
D26
D6
A30
WR
YG
WG
WL
BL
BL
YR
E/G(TB)-01 A
GR
WR
YG
WG
WL
BL
YR
49
9
20
31
10
41
45
B21
E2
BrW
LY
GY
BrY
Y
LW
L
IGNITION COIL No. 1
E31
IGNITION COIL No. 2
E32
IGNITION COIL No. 3
E33
IGNITION COIL No. 4
E34
LEAK DIAGNOSIS CONNECTOR
E80

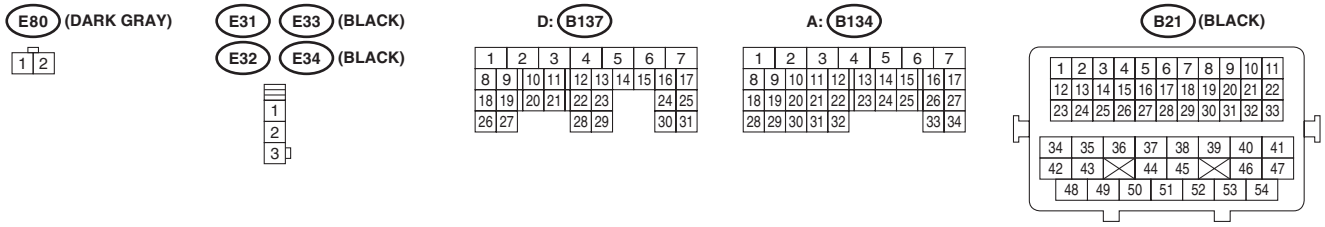
E80 (DARK GRAY)
E31 E33 (BLACK)
E32 E34 (BLACK)
D: B137
A: B134
B21 (BLACK)

WI-22945

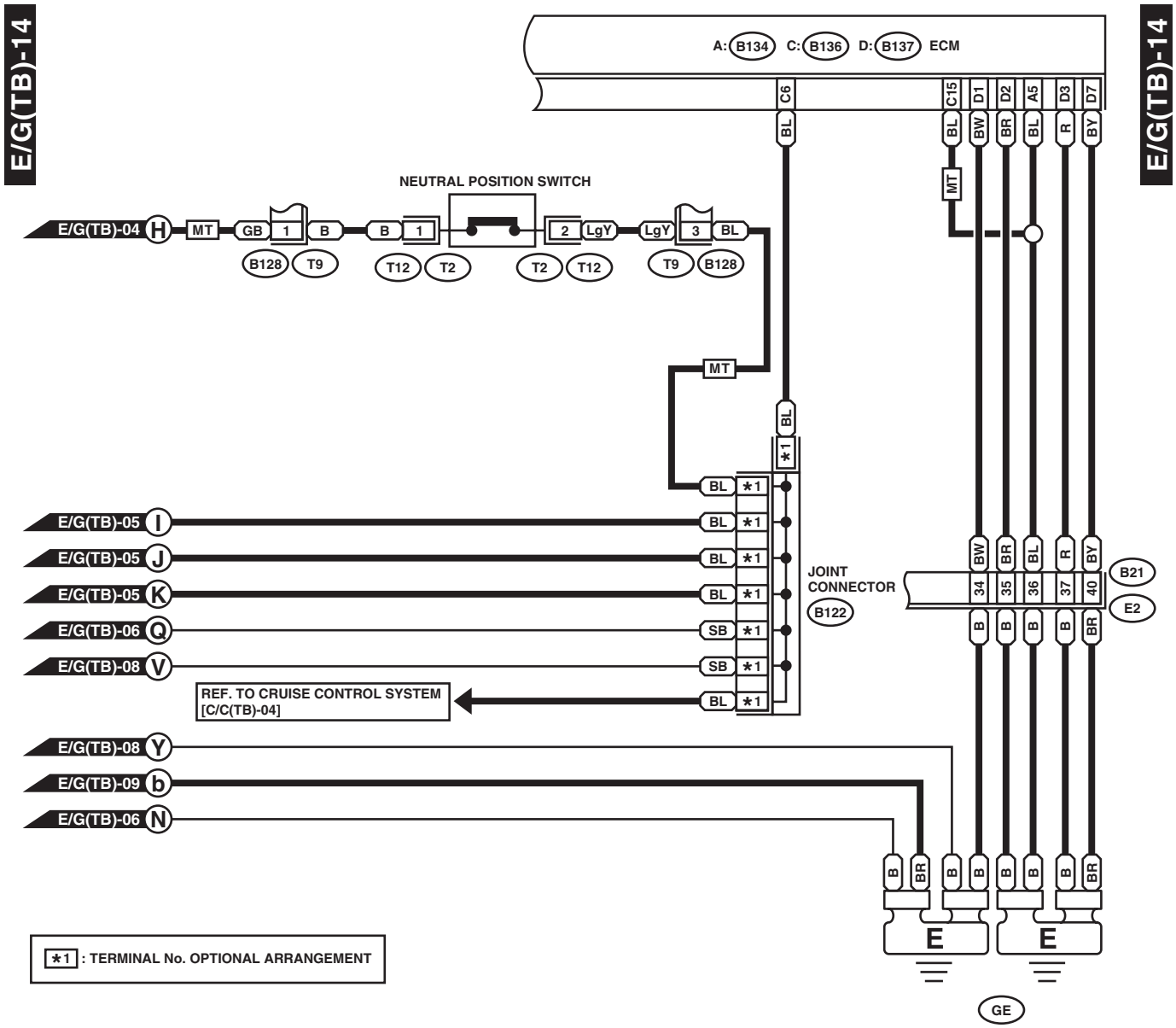
E/G(TB)-14
A: B134 C: B136 D: B137 ECM
C6
C15
D1
D2
A5
D3
D7
BL
BW
BR
R
BY
MT
NEUTRAL POSITION SWITCH
E/G(TB)-04 H
GB
B
LgY
B128
T9
T12
T2
E/G(TB)-05 I
E/G(TB)-05 J
E/G(TB)-05 K
E/G(TB)-06 Q
E/G(TB)-08 V
SB
*1
REF. TO CRUISE CONTROL SYSTEM [C/C(TB)-04]
JOINT CONNECTOR
B122
34
35
36
37
40
B21
E2
E/G(TB)-08 Y
E/G(TB)-09 b
E/G(TB)-06 N
E
GE
*1 : TERMINAL No. OPTIONAL ARRANGEMENT

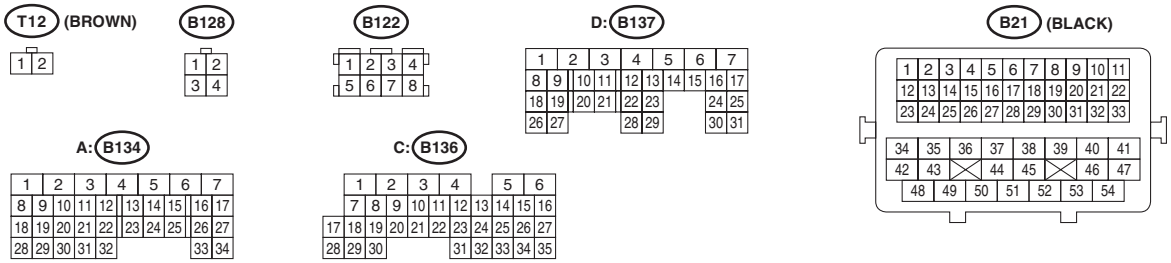
T12 (BROWN)
B128
B122
D: B137
B21 (BLACK)
A: B134
C: B136

WI-21406

6. Radiator Fan System

A: WIRING DIAGRAM

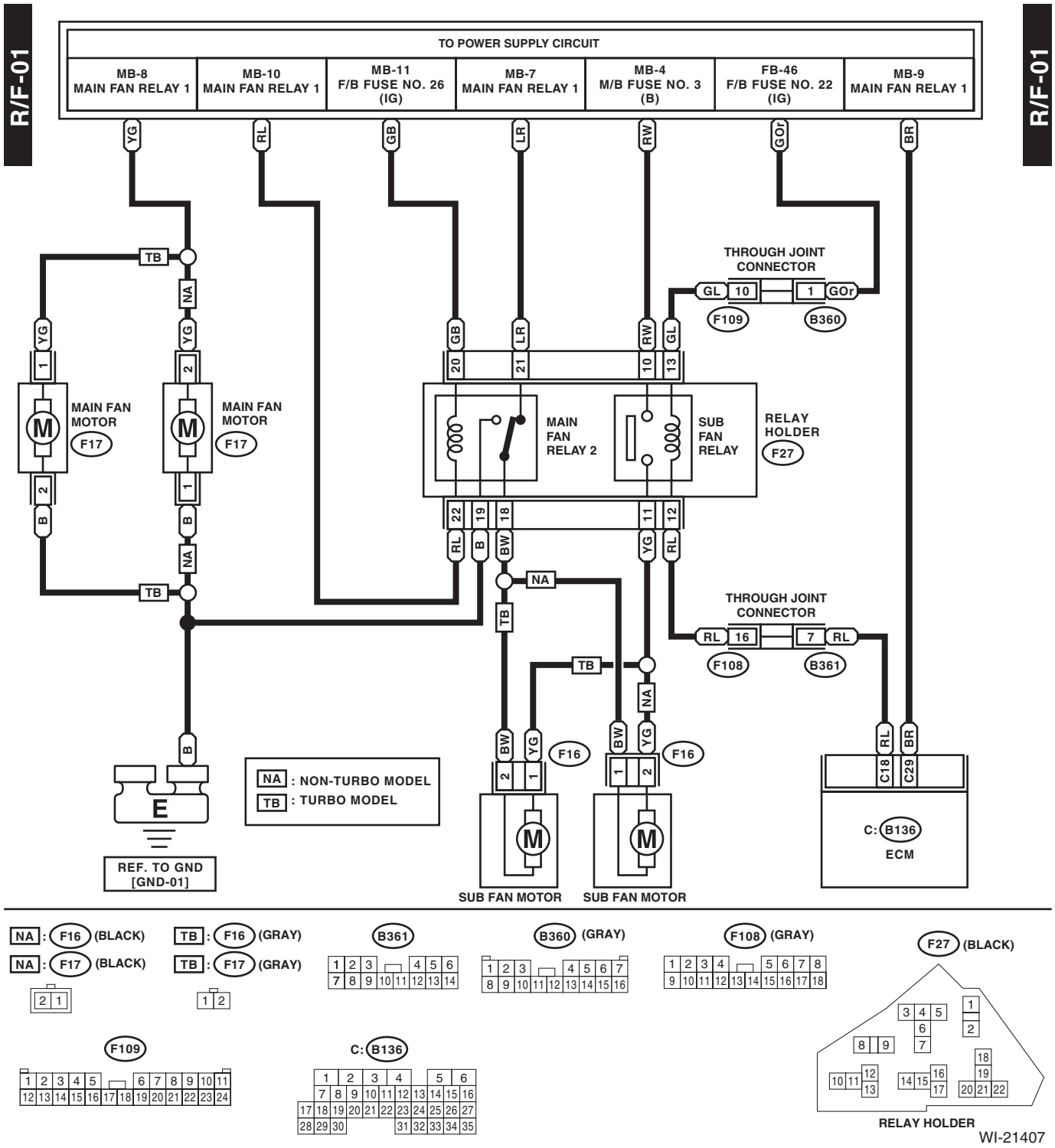

7. Charging System

A: WIRING DIAGRAM

CHG-01

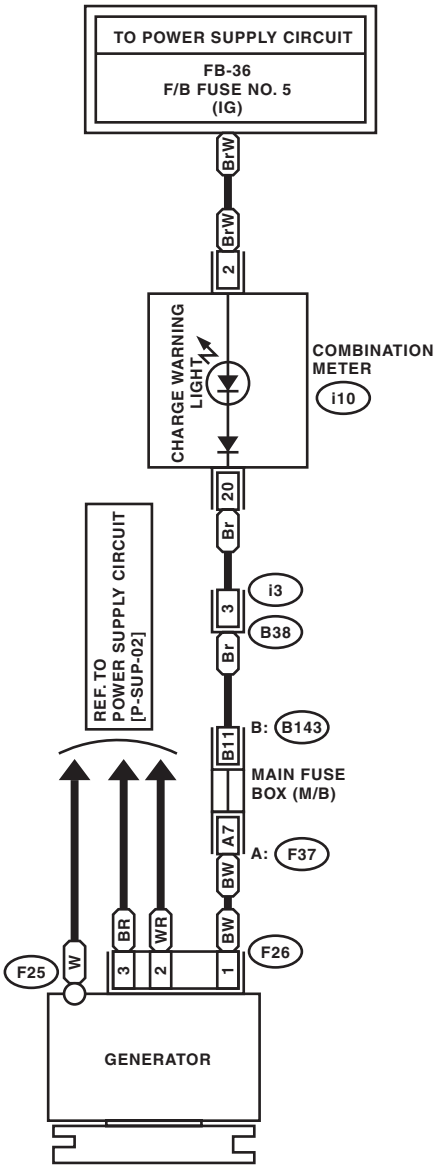

CHG-01

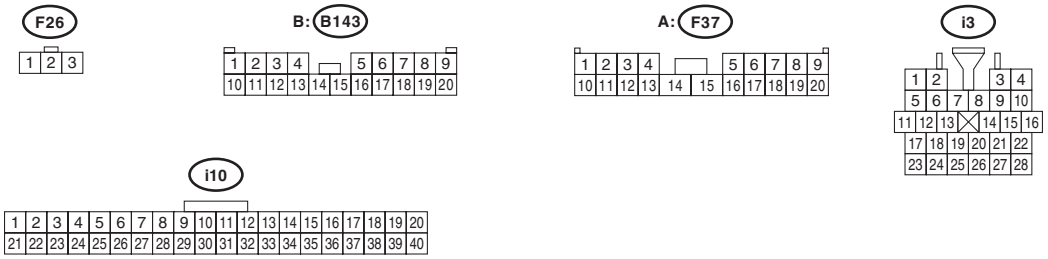

WI-16897

8. Starter System

A: WIRING DIAGRAM

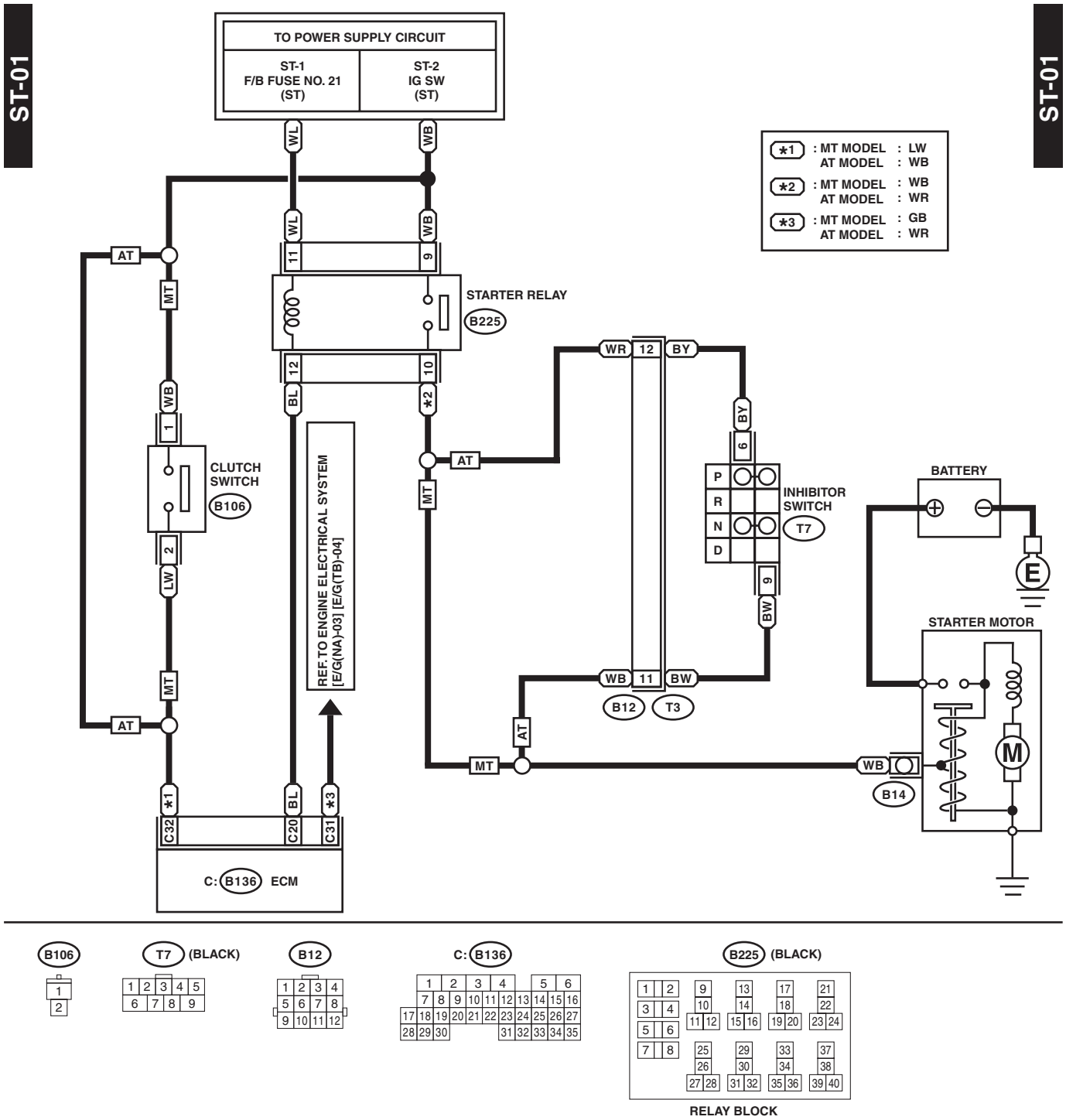

WI-21408

9. Remote Engine Start System

A: WIRING DIAGRAM

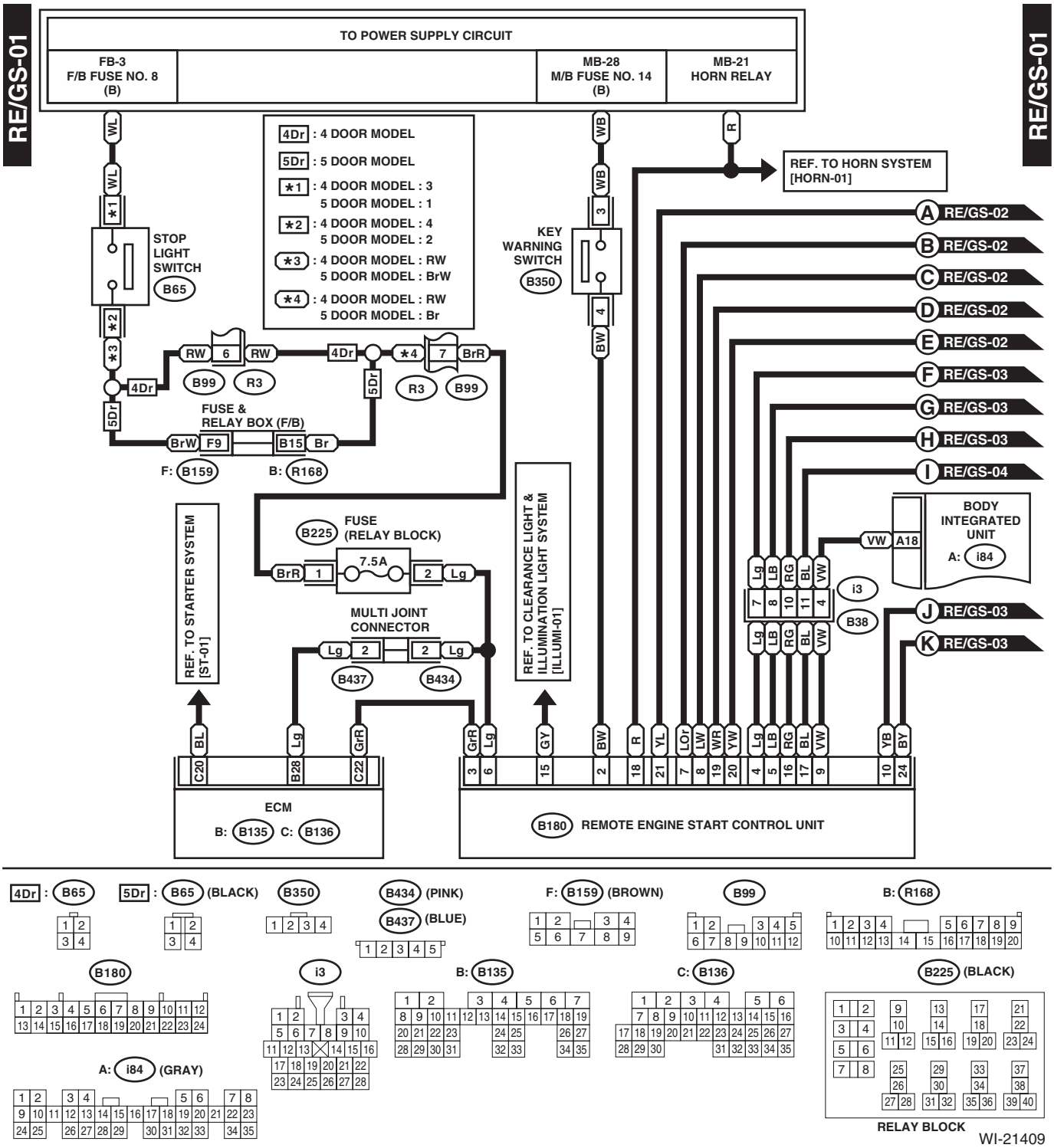

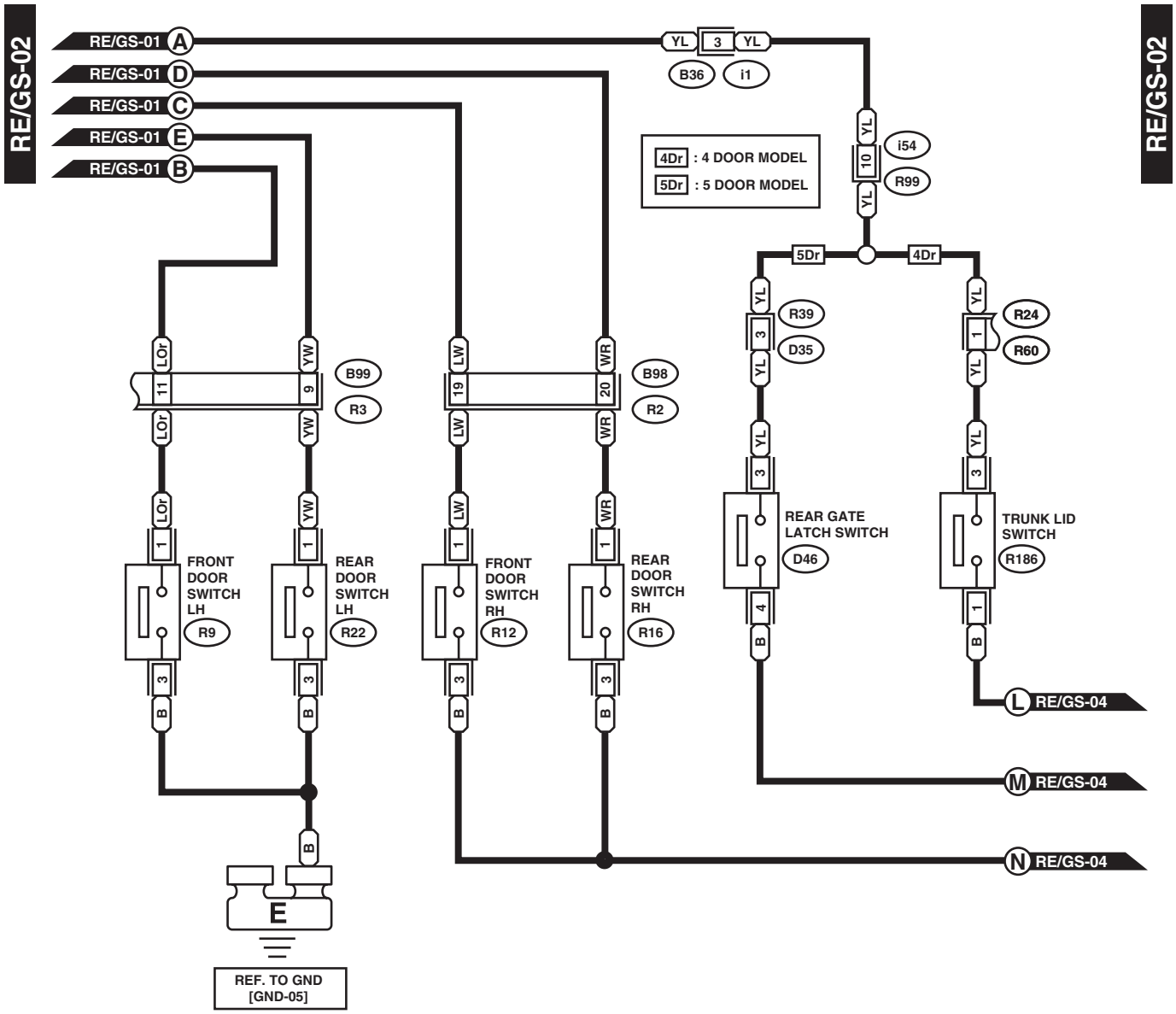
RE/GS-02
RE/GS-01 A
RE/GS-01 D
RE/GS-01 C
RE/GS-01 E
RE/GS-01 B
YL 3 YL
B36 i1
4Dr : 4 DOOR MODEL
5Dr : 5 DOOR MODEL
YL 10 YL
i54
R99
5Dr
4Dr
R39
D35
R24
R60
B99
R3
B98
R2
FRONT DOOR SWITCH LH
R9
REAR DOOR SWITCH LH
R22
FRONT DOOR SWITCH RH
R12
REAR DOOR SWITCH RH
R16
REAR GATE LATCH SWITCH
D46
TRUNK LID SWITCH
R186
L RE/GS-04
M RE/GS-04
N RE/GS-04
E
REF. TO GND [GND-05]

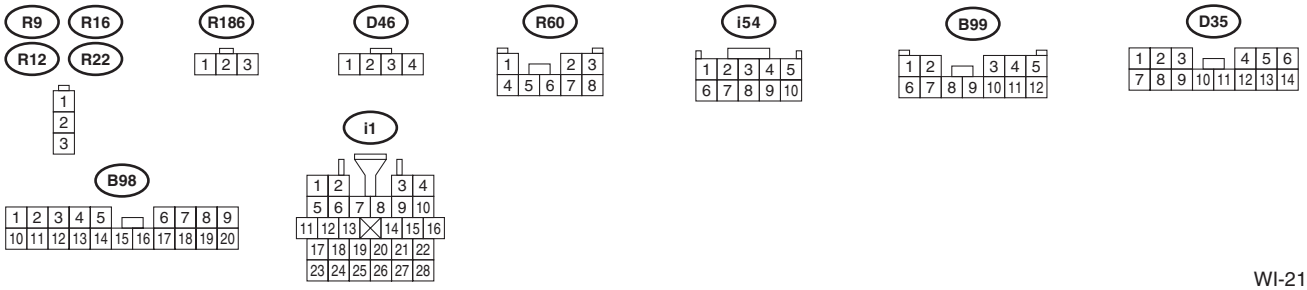
R9
R16
R12
R22
R186
D46
R60
i54
B99
D35
B98
i1

WI-21410

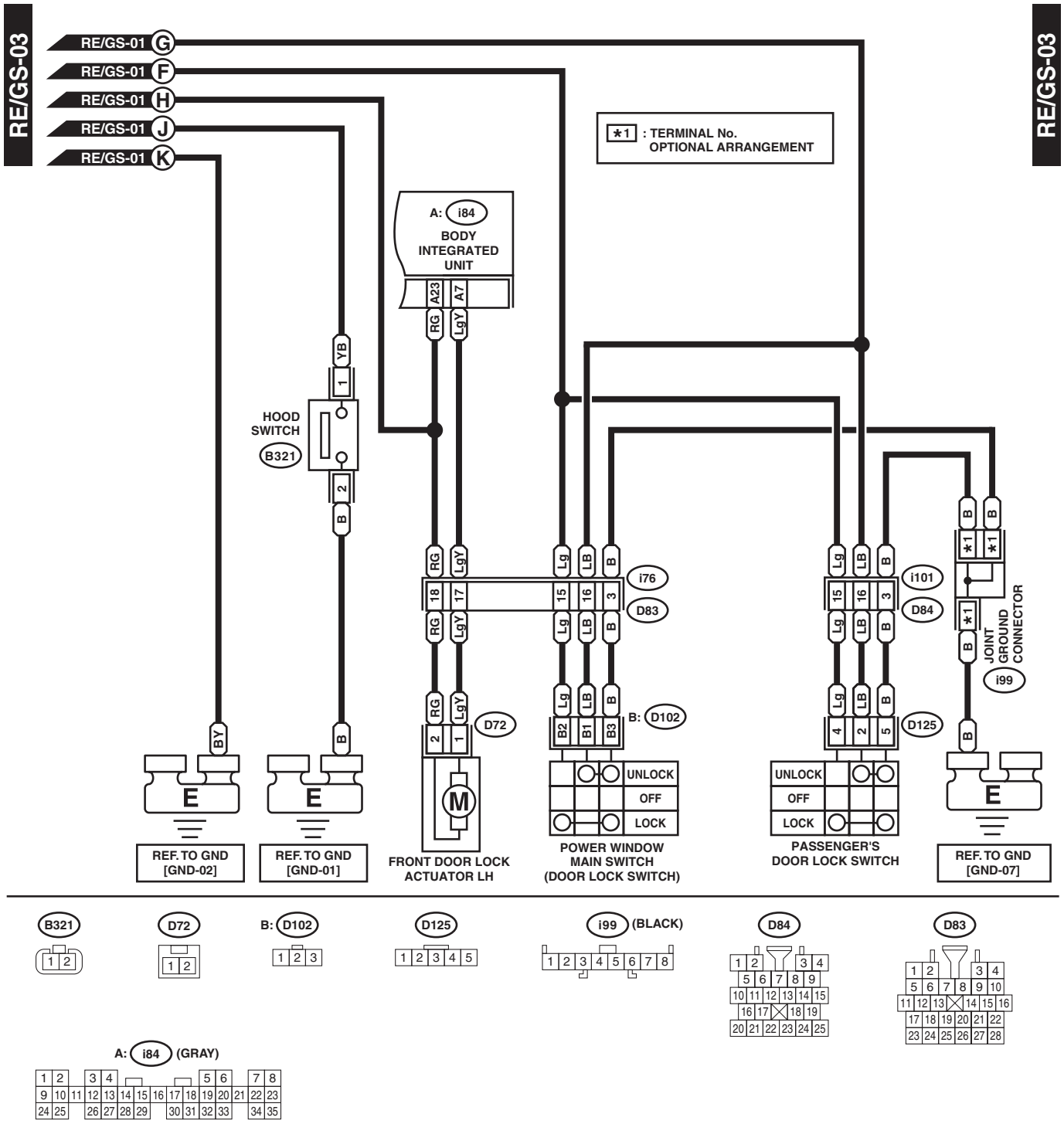
RE/GS-03
RE/GS-01 G
RE/GS-01 F
RE/GS-01 H
RE/GS-01 J
RE/GS-01 K
*1 : TERMINAL No. OPTIONAL ARRANGEMENT
A: i84
BODY INTEGRATED UNIT
A23
A7
RG
LgY
YB
HOOD SWITCH
B321
B
BY
i76
D83
i101
D84
JOINT GROUND CONNECTOR
i99
D72
B: D102
D125
Lg
LB
B1
B2
B3
UNLOCK
OFF
LOCK
REF. TO GND [GND-02]
REF. TO GND [GND-01]
FRONT DOOR LOCK ACTUATOR LH
POWER WINDOW MAIN SWITCH (DOOR LOCK SWITCH)
PASSENGER'S DOOR LOCK SWITCH
REF. TO GND [GND-07]
B321
D72
B: D102
D125
i99 (BLACK)
D84
D83
A: i84 (GRAY)
WI-21411

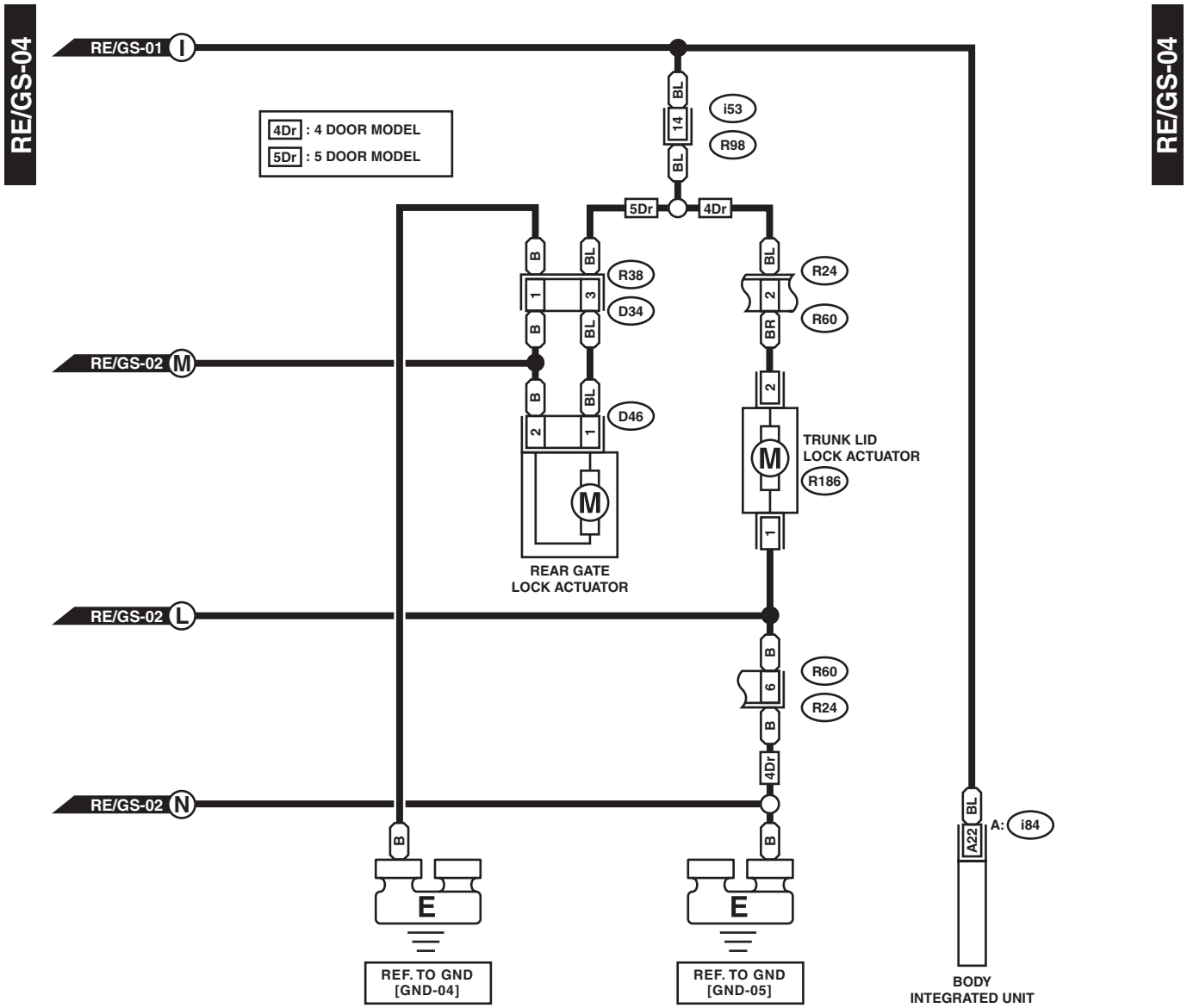
RE/GS-04
RE/GS-01 I
4Dr : 4 DOOR MODEL
5Dr : 5 DOOR MODEL
BL
14
i53
R98
5Dr
4Dr
B
BL
1
3
R38
D34
BL
R24
2
R60
BR
RE/GS-02 M
2
B
BL
D46
2
1
M
REAR GATE
LOCK ACTUATOR
M
TRUNK LID
LOCK ACTUATOR
R186
1
RE/GS-02 L
B
6
R60
R24
B
4Dr
RE/GS-02 N
B
E
REF. TO GND
[GND-04]
B
E
REF. TO GND
[GND-05]
BL
A22
A: i84
BODY
INTEGRATED UNIT

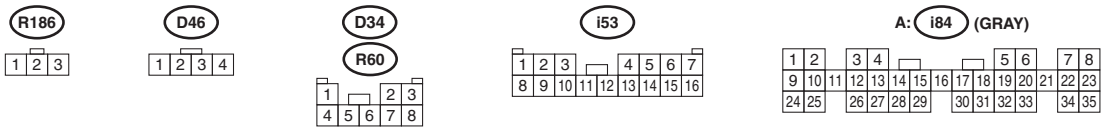
R186
1 2 3
D46
1 2 3 4
D34
R60
1 2 3
4 5 6 7 8
i53
1 2 3 4 5 6 7
8 9 10 11 12 13 14 15 16
A: i84 (GRAY)
1 2 3 4 5 6 7 8
9 10 11 12 13 14 15 16 17 18 19 20 21 22 23
24 25 26 27 28 29 30 31 32 33 34 35

WI-21412

10.AT Control System

A: WIRING DIAGRAM

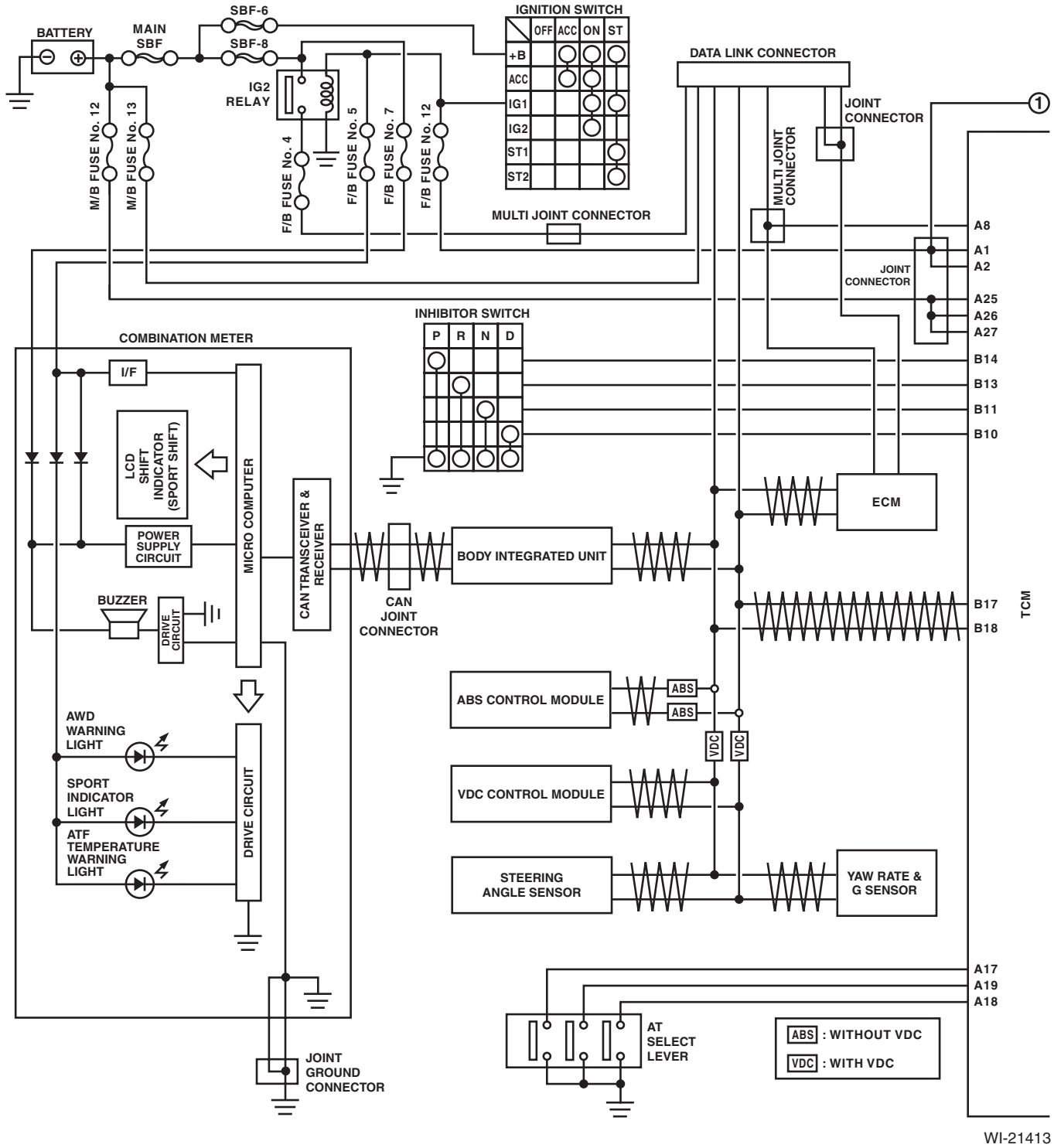

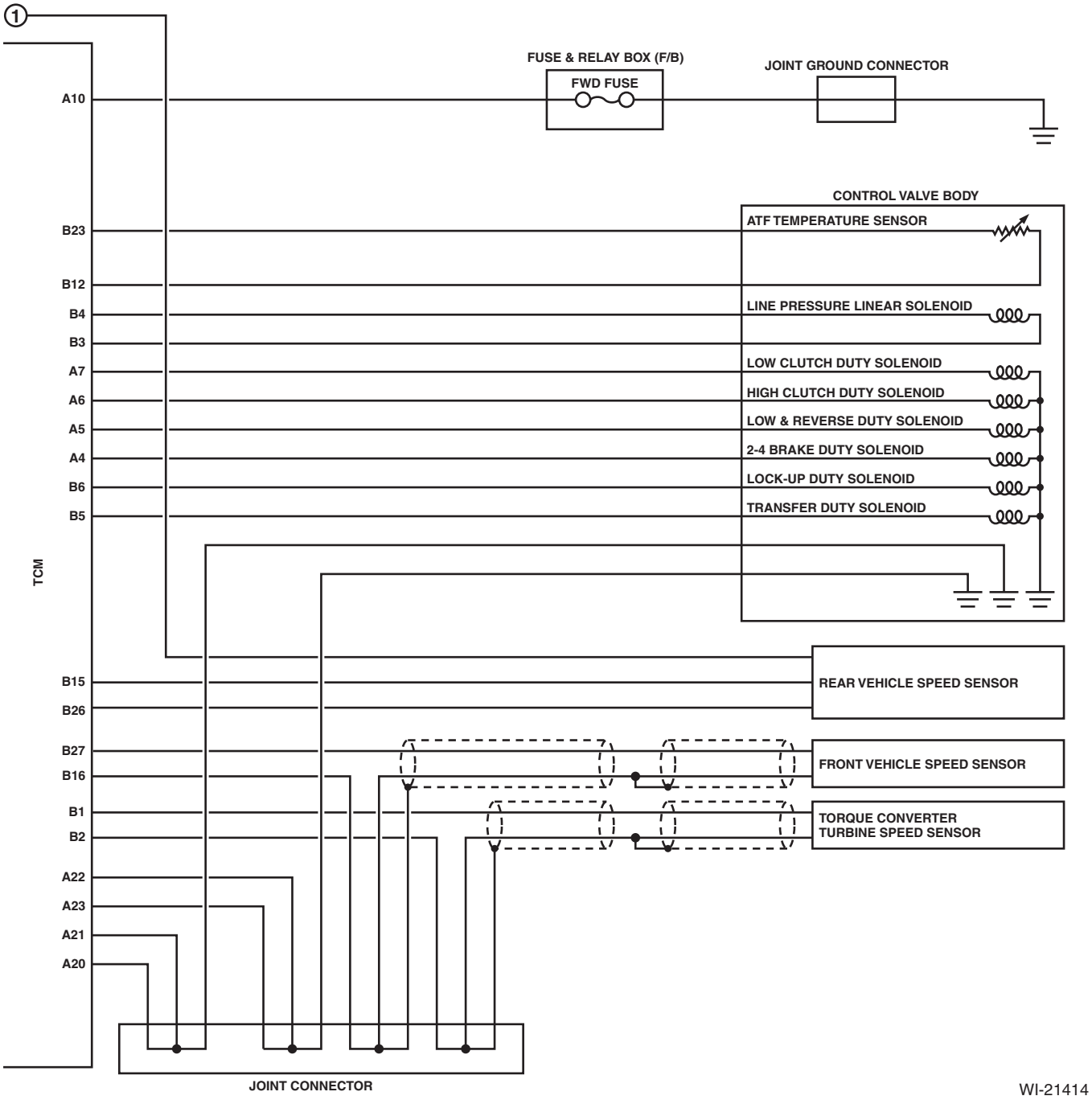
1
FUSE & RELAY BOX (F/B)
FWD FUSE
JOINT GROUND CONNECTOR
A10
CONTROL VALVE BODY
ATF TEMPERATURE SENSOR
B23
B12
LINE PRESSURE LINEAR SOLENOID
B4
B3
LOW CLUTCH DUTY SOLENOID
A7
HIGH CLUTCH DUTY SOLENOID
A6
LOW & REVERSE DUTY SOLENOID
A5
2-4 BRAKE DUTY SOLENOID
A4
LOCK-UP DUTY SOLENOID
B6
TRANSFER DUTY SOLENOID
B5
TCM
REAR VEHICLE SPEED SENSOR
B15
B26
FRONT VEHICLE SPEED SENSOR
B27
B16
TORQUE CONVERTER
TURBINE SPEED SENSOR
B1
B2
A22
A23
A21
A20
JOINT CONNECTOR

WI-21414

WIRING SYSTEM

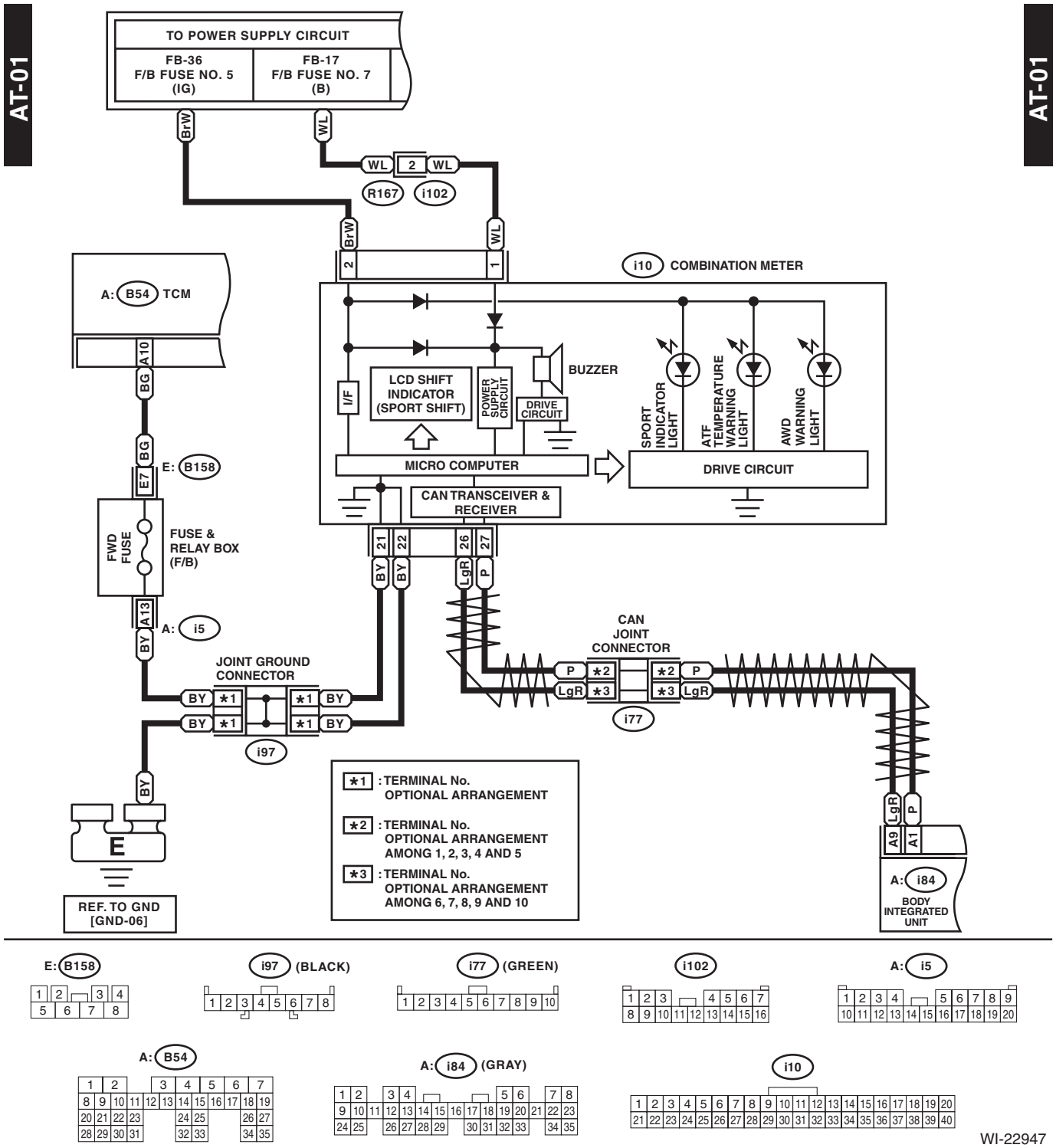

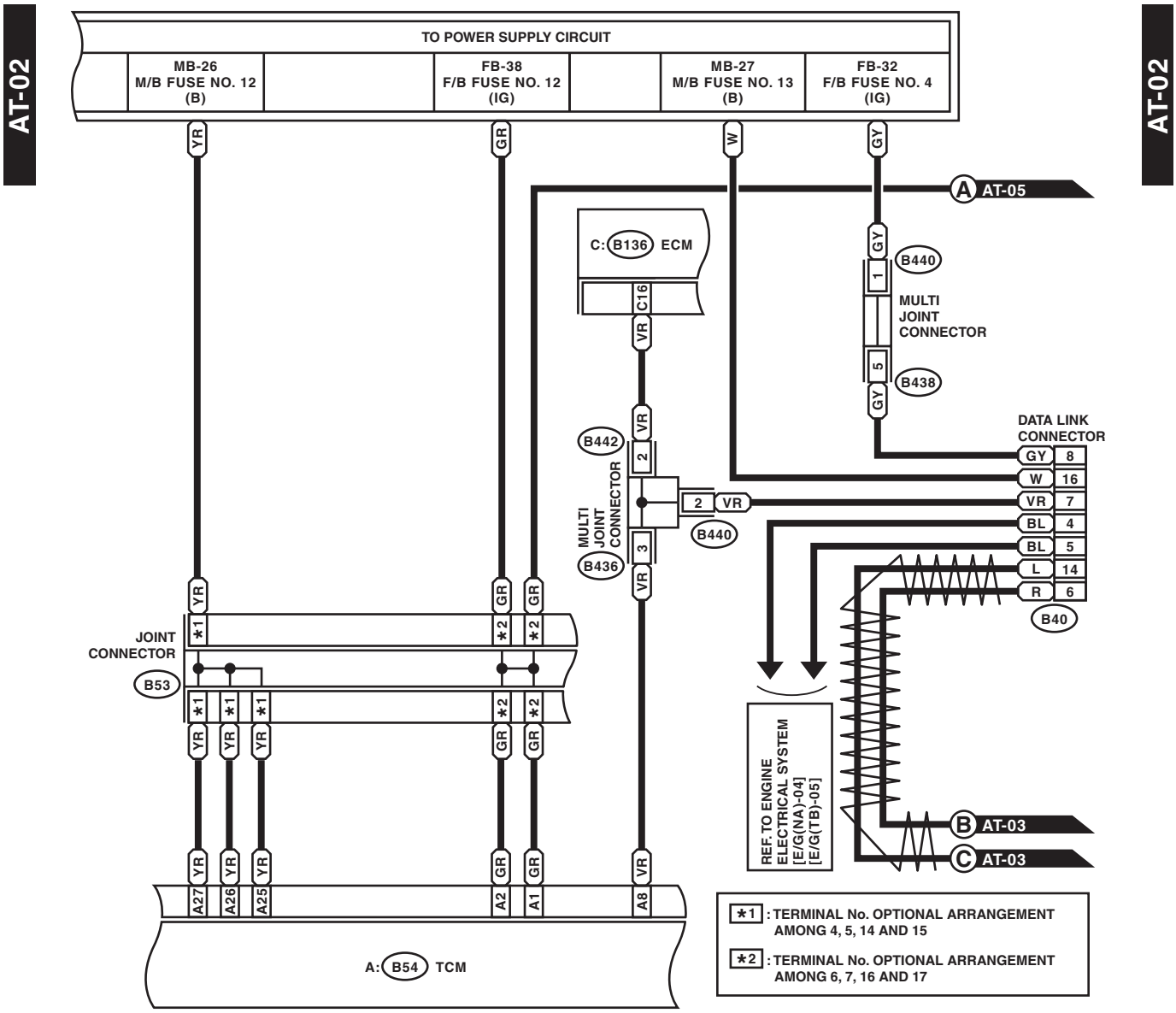
AT-02
TO POWER SUPPLY CIRCUIT
MB-26
M/B FUSE NO. 12
(B)
FB-38
F/B FUSE NO. 12
(IG)
MB-27
M/B FUSE NO. 13
(B)
FB-32
F/B FUSE NO. 4
(IG)
YR
GR
W
GY
A AT-05
C: B136 ECM
C16
VR
B440
MULTI
JOINT
CONNECTOR
B438
DATA LINK
CONNECTOR
GY 8
W 16
VR 7
BL 4
BL 5
L 14
R 6
B40
B442
MULTI
JOINT
CONNECTOR
B436
JOINT
CONNECTOR
B53
REF. TO ENGINE
ELECTRICAL SYSTEM
[E/G(NA)-04]
[E/G(TB)-05]
B AT-03
C AT-03
A27
A26
A25
A2
A1
A8
A: B54 TCM
*1 : TERMINAL No. OPTIONAL ARRANGEMENT AMONG 4, 5, 14 AND 15
*2 : TERMINAL No. OPTIONAL ARRANGEMENT AMONG 6, 7, 16 AND 17

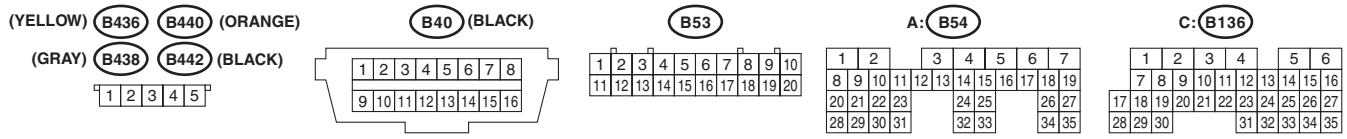
(YELLOW) B436 B440 (ORANGE)
(GRAY) B438 B442 (BLACK)
B40 (BLACK)
B53
A: B54
C: B136

WI-21415

WIRING SYSTEM

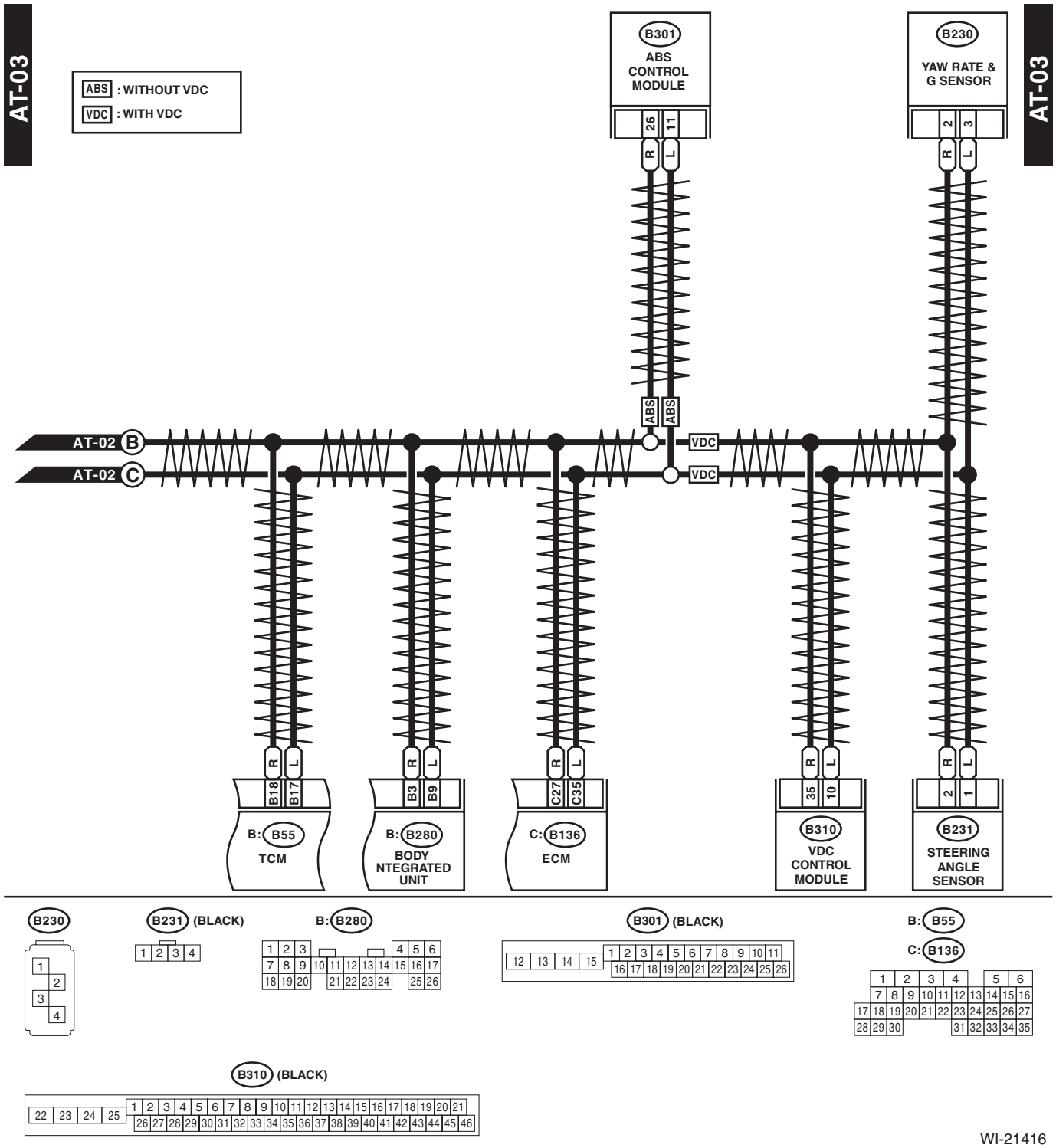

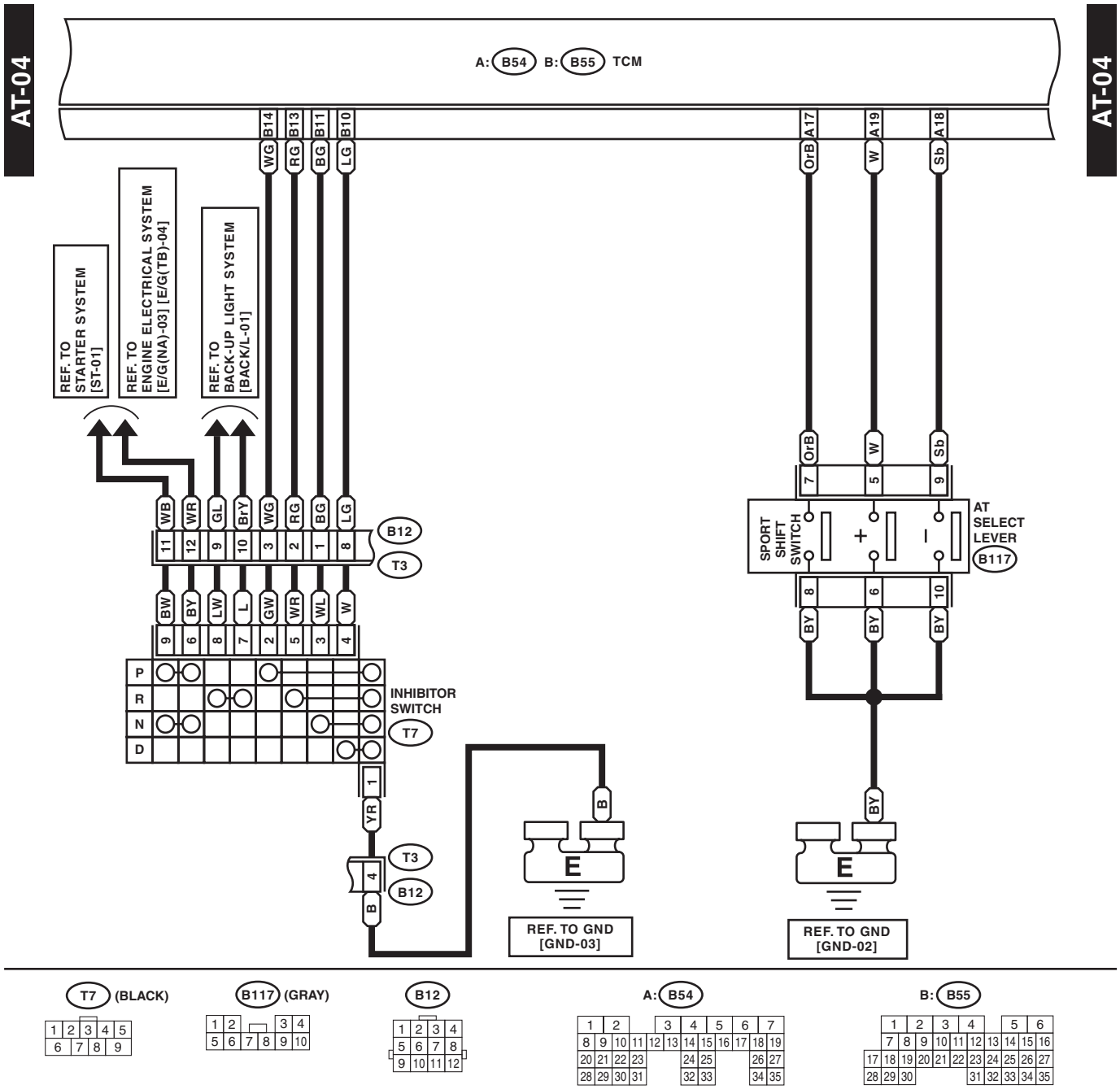
AT-04
A: B54 B: B55 TCM
B14 B13 B11 B10
WG RG BG LG
A17 A19 A18
OrB W Sb
REF. TO STARTER SYSTEM [ST-01]
REF. TO ENGINE ELECTRICAL SYSTEM [E/G(NA)-03] [E/G(TB)-04]
REF. TO BACK-UP LIGHT SYSTEM [BACK/L-01]
WB WR GL BrY WG RG BG LG
11 12 9 10 3 2 1 8
B12
T3
BW BY LW L GW WR WL W
9 6 8 7 2 5 3 4
P
R
N
D
INHIBITOR SWITCH
T7
1
YR
T3
4
B12
B
E
REF. TO GND [GND-03]
SPORT SHIFT SWITCH
+
−
AT SELECT LEVER
B117
7 5 9
8 6 10
BY BY BY
E
REF. TO GND [GND-02]
T7 (BLACK)
B117 (GRAY)
B12
A: B54
B: B55

WI-21417

WIRING SYSTEM

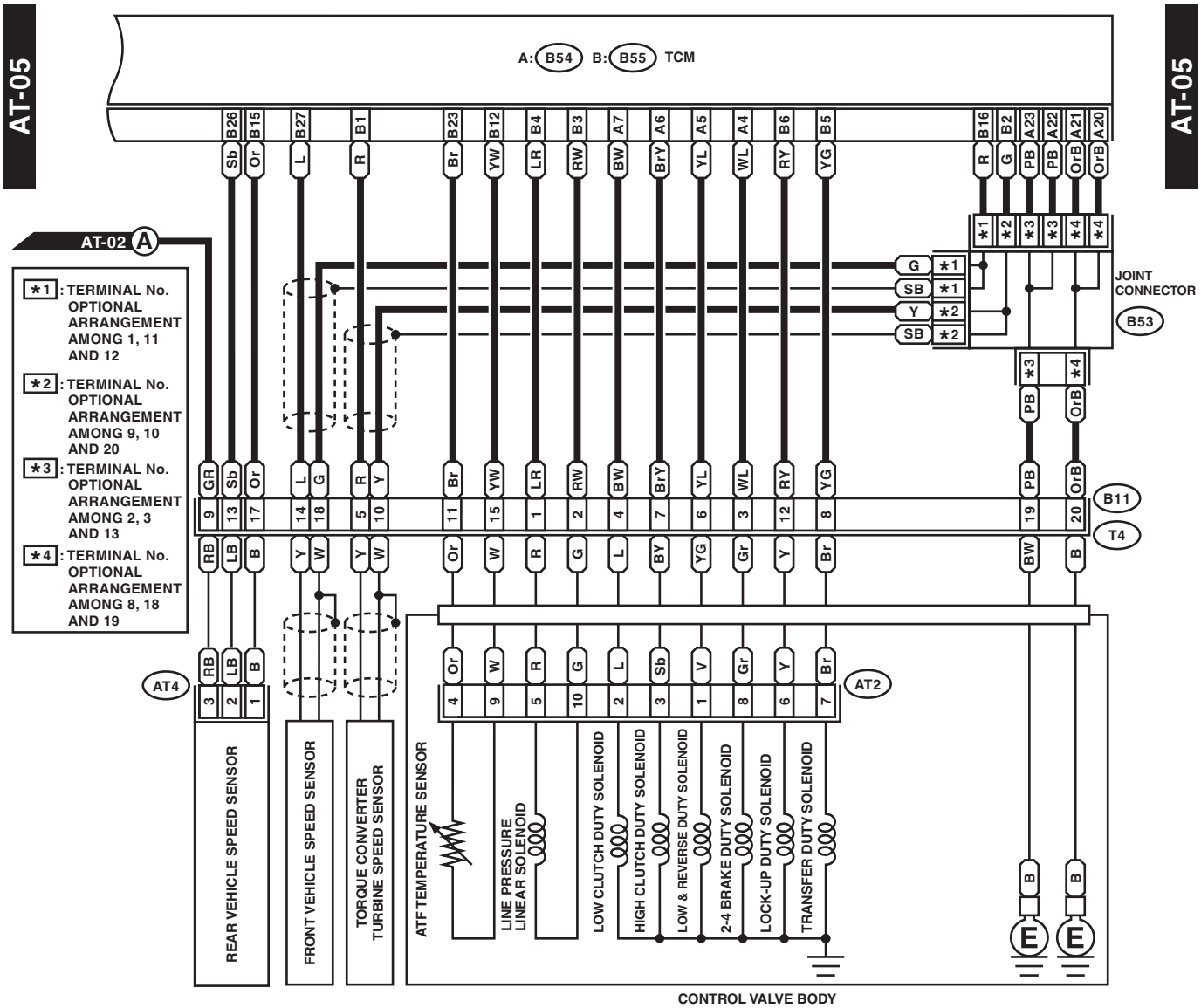

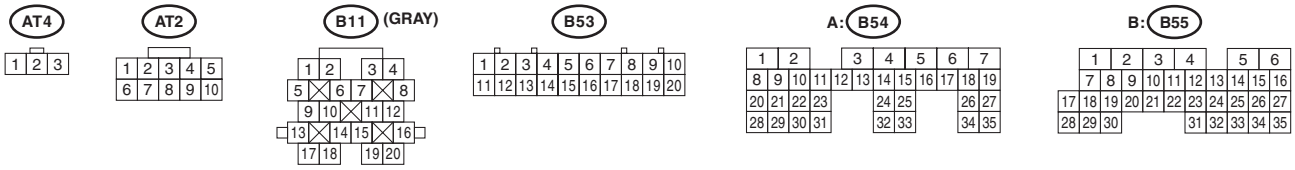

WI-19670

11.AT Shift Lock Control System

A: WIRING DIAGRAM

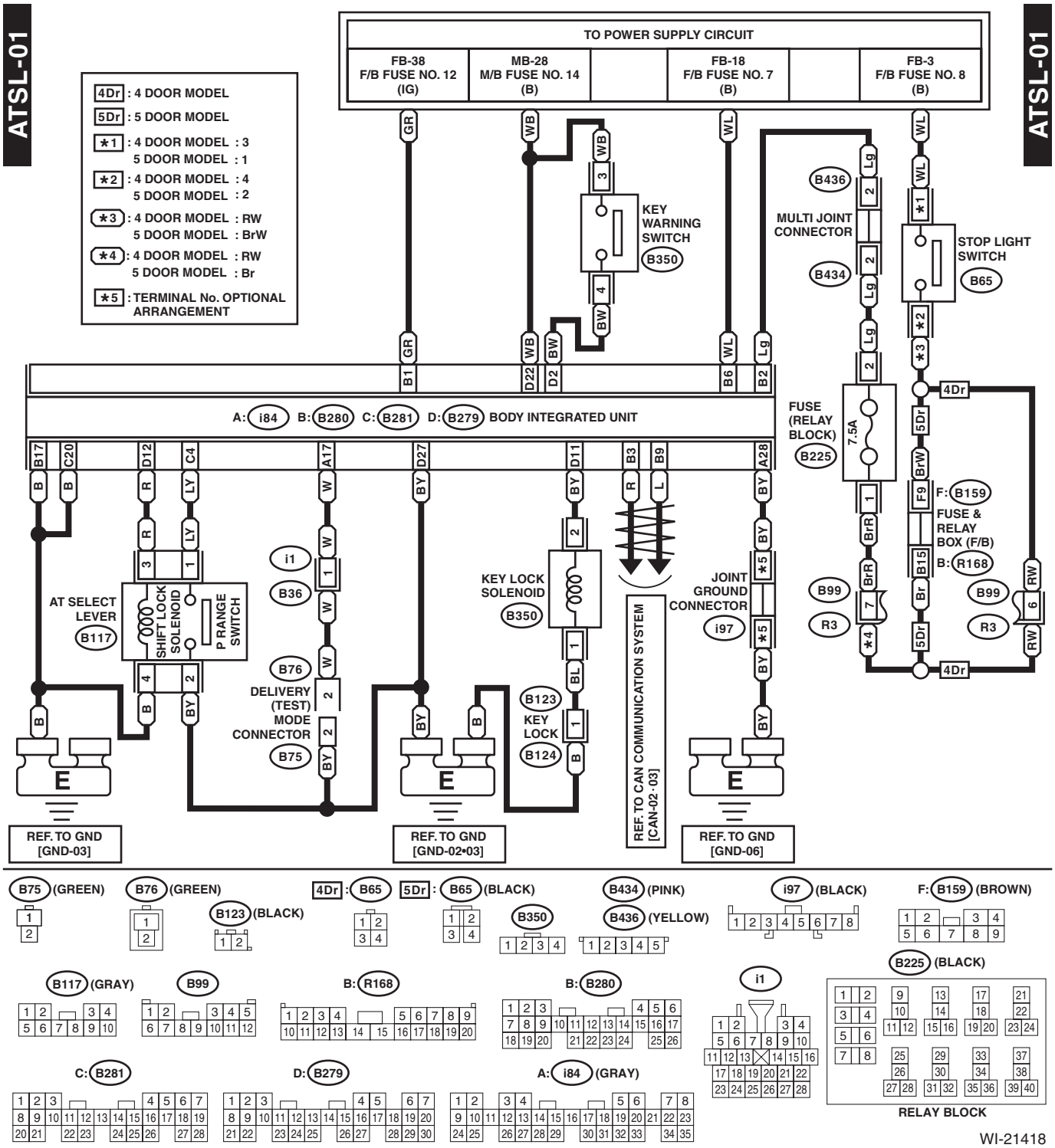

12. Anti-lock Brake System

A: WIRING DIAGRAM

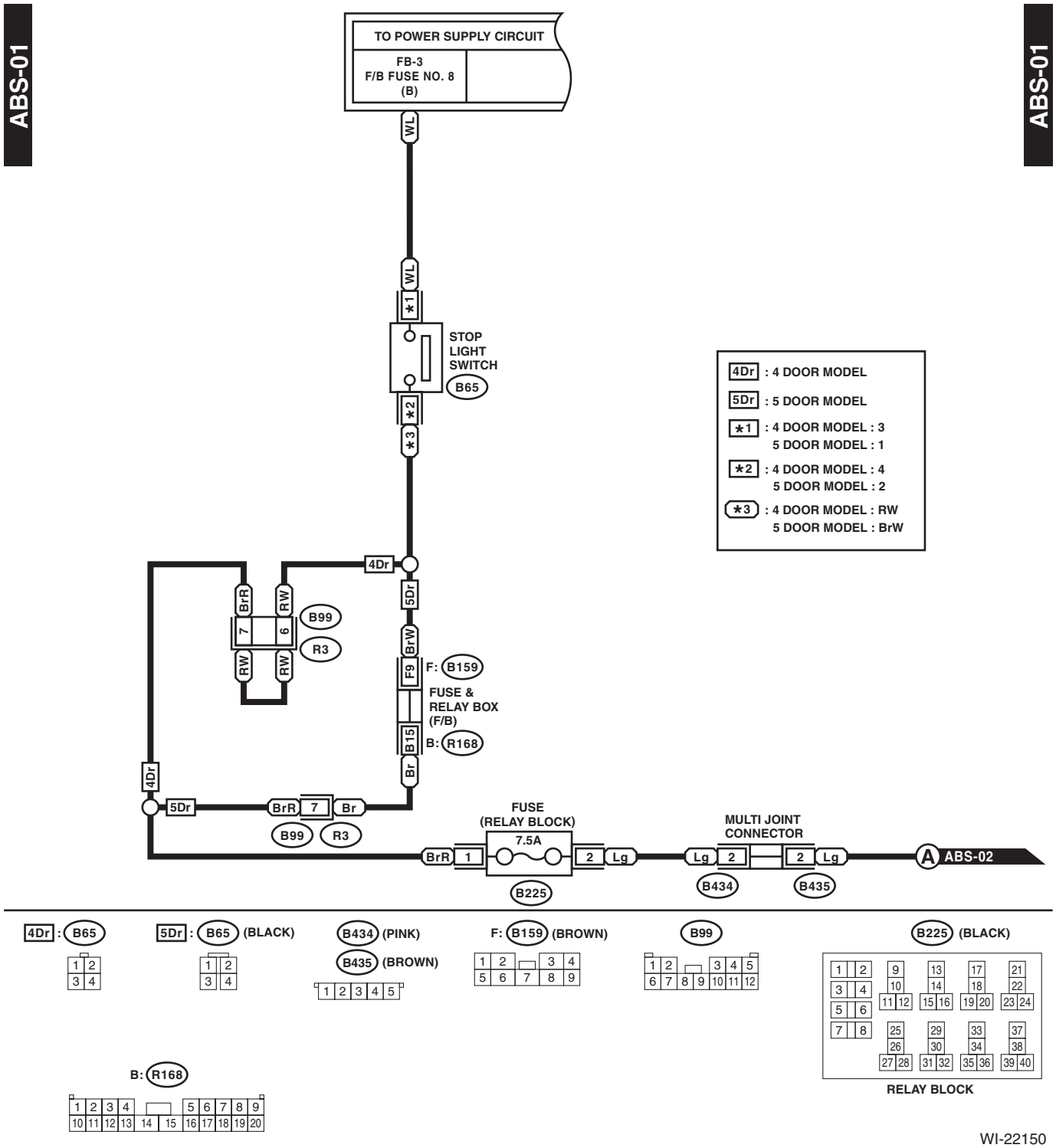

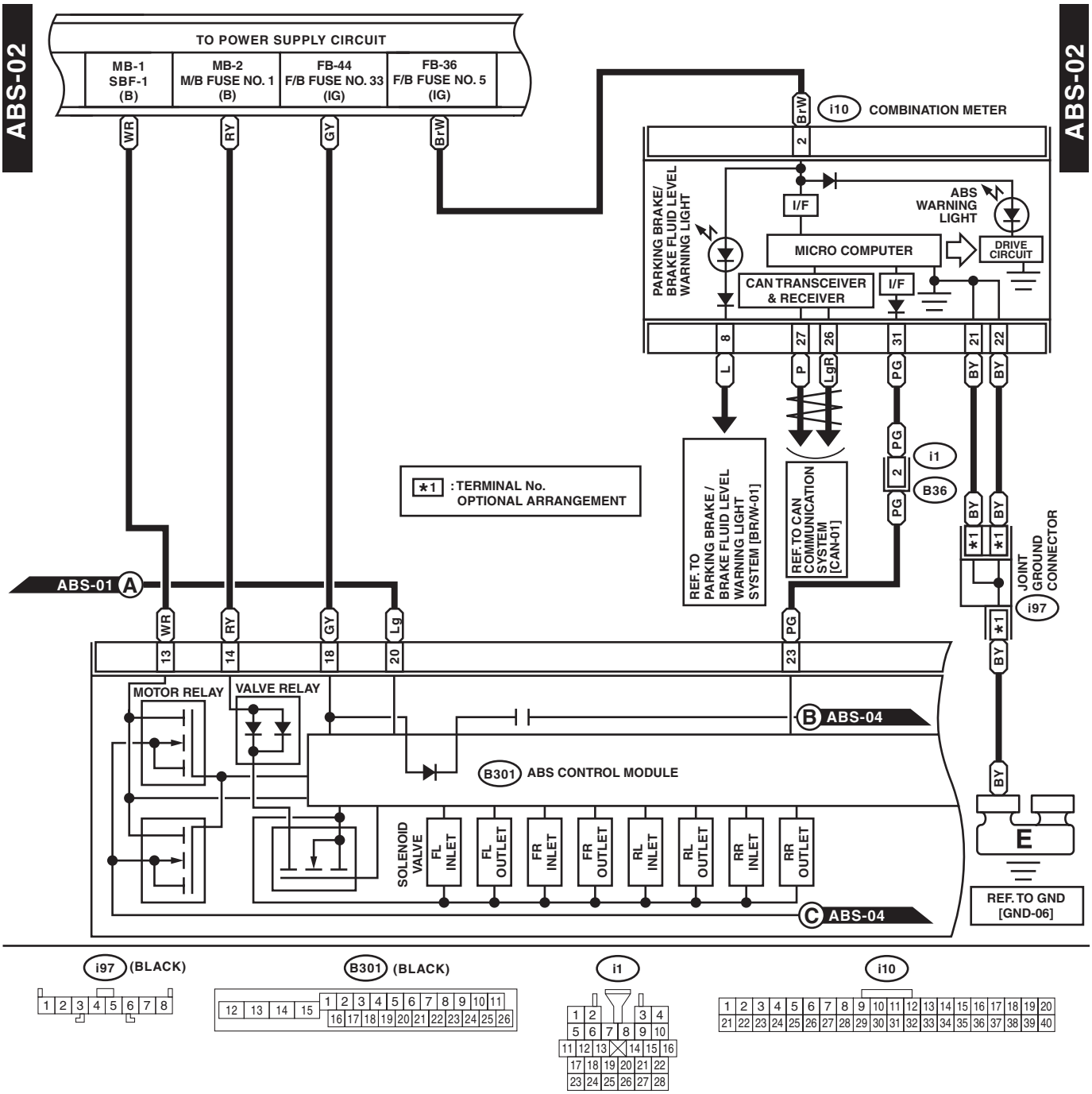
ABS-02
TO POWER SUPPLY CIRCUIT
MB-1 SBF-1 (B)
MB-2 M/B FUSE NO. 1 (B)
FB-44 F/B FUSE NO. 33 (IG)
FB-36 F/B FUSE NO. 5 (IG)
i10 COMBINATION METER
PARKING BRAKE/ BRAKE FLUID LEVEL WARNING LIGHT
I/F
ABS WARNING LIGHT
MICRO COMPUTER
DRIVE CIRCUIT
CAN TRANSCEIVER & RECEIVER
I/F
*1 : TERMINAL No. OPTIONAL ARRANGEMENT
REF. TO PARKING BRAKE / BRAKE FLUID LEVEL WARNING LIGHT SYSTEM [BR/W-01]
REF. TO CAN COMMUNICATION SYSTEM [CAN-01]
i1
B36
JOINT GROUND CONNECTOR
i97
ABS-01 A
MOTOR RELAY
VALVE RELAY
B ABS-04
B301 ABS CONTROL MODULE
SOLENOID VALVE
FL INLET
FL OUTLET
FR INLET
FR OUTLET
RL INLET
RL OUTLET
RR INLET
RR OUTLET
C ABS-04
E
REF. TO GND [GND-06]
i97 (BLACK)
B301 (BLACK)
i1
i10

WI-22948

ABS-03

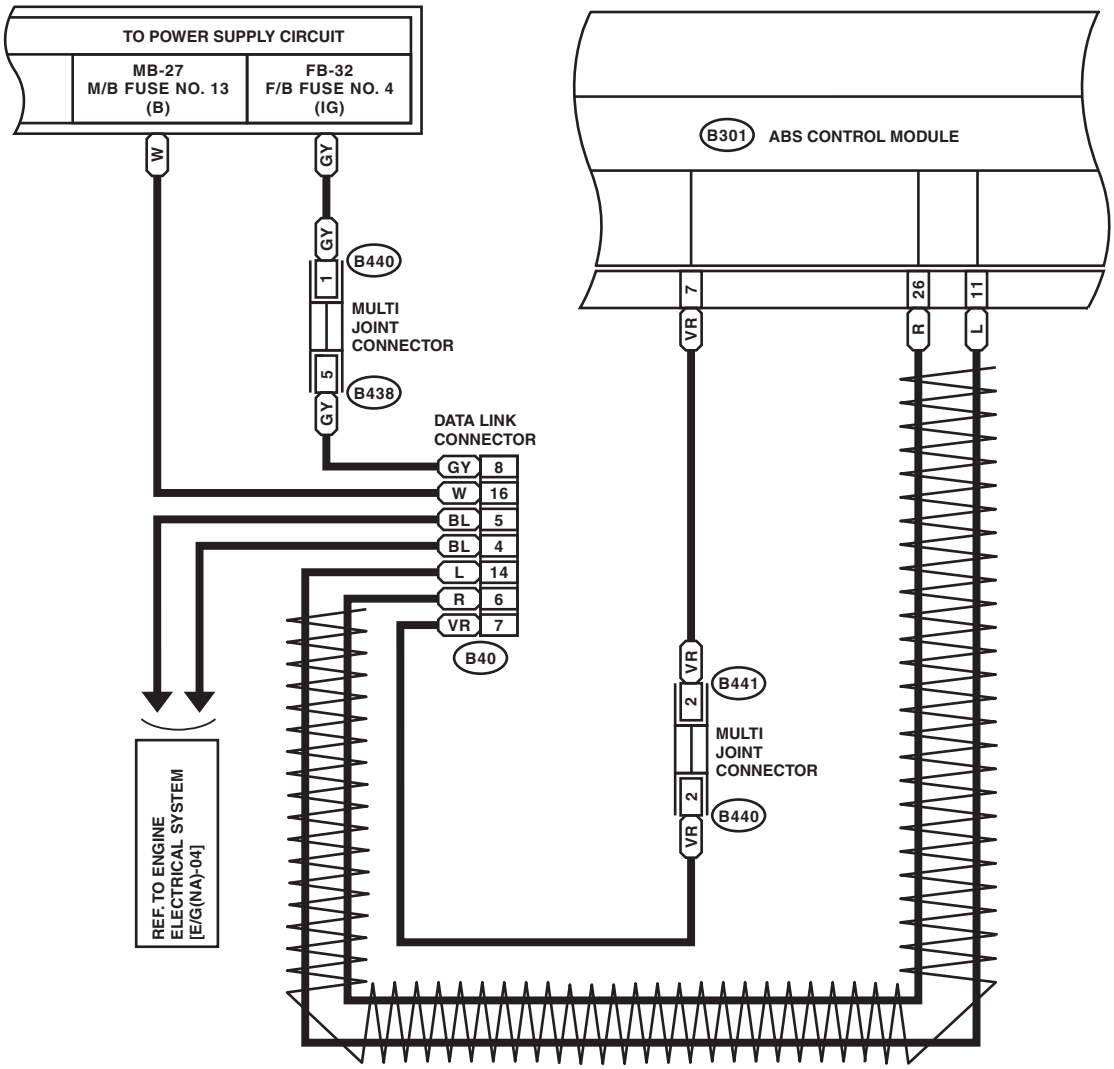

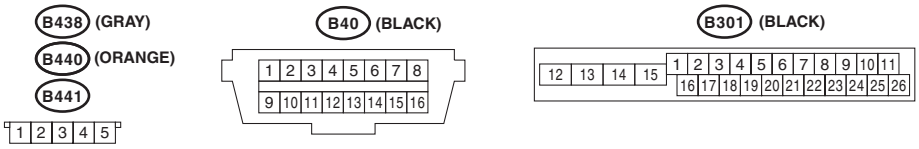

WI-21419

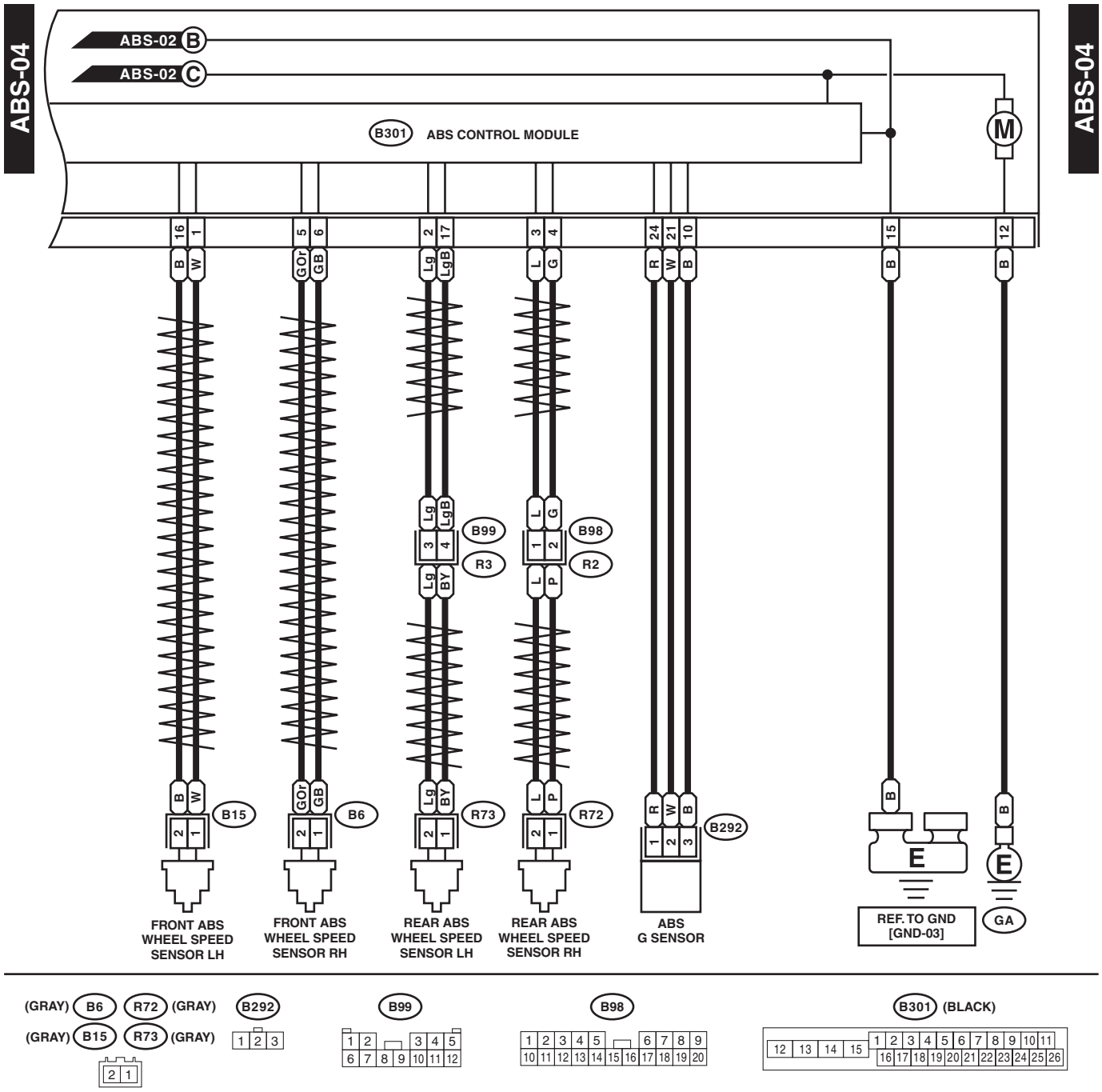
ABS-04
ABS-02 B
ABS-02 C
B301 ABS CONTROL MODULE
M
16 1 5 6 2 17 3 4 24 21 10 15 12
B W GOr GB Lg LgB L G R W B B B
Lg LgB B99
3 4
R3
L G B98
1 2
R2
Lg BY L P
B W B15
2 1
GOr GB B6
2 1
Lg BY R73
2 1
L P R72
2 1
R W B B292
1 2 3
B
E
B
E
FRONT ABS WHEEL SPEED SENSOR LH
FRONT ABS WHEEL SPEED SENSOR RH
REAR ABS WHEEL SPEED SENSOR LH
REAR ABS WHEEL SPEED SENSOR RH
ABS G SENSOR
REF. TO GND [GND-03]
GA
(GRAY) B6 R72 (GRAY)
(GRAY) B15 R73 (GRAY)
2 1
B292
1 2 3
B99
1 2 3 4 5
6 7 8 9 10 11 12
B98
1 2 3 4 5 6 7 8 9
10 11 12 13 14 15 16 17 18 19 20
B301 (BLACK)
12 13 14 15
1 2 3 4 5 6 7 8 9 10 11
16 17 18 19 20 21 22 23 24 25 26

WI-22949

13.Vehicle Dynamics Control System

A: WIRING DIAGRAM

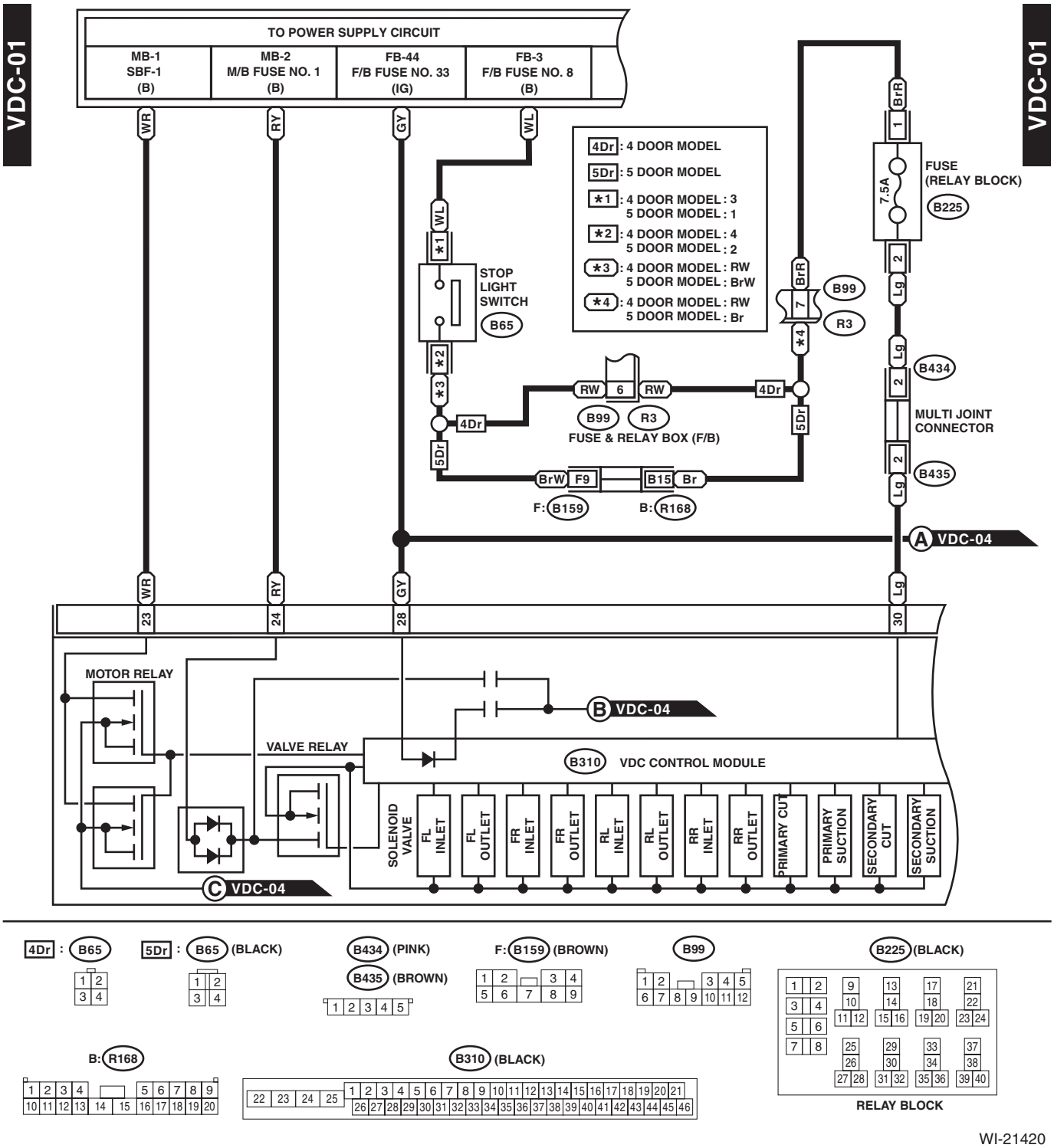

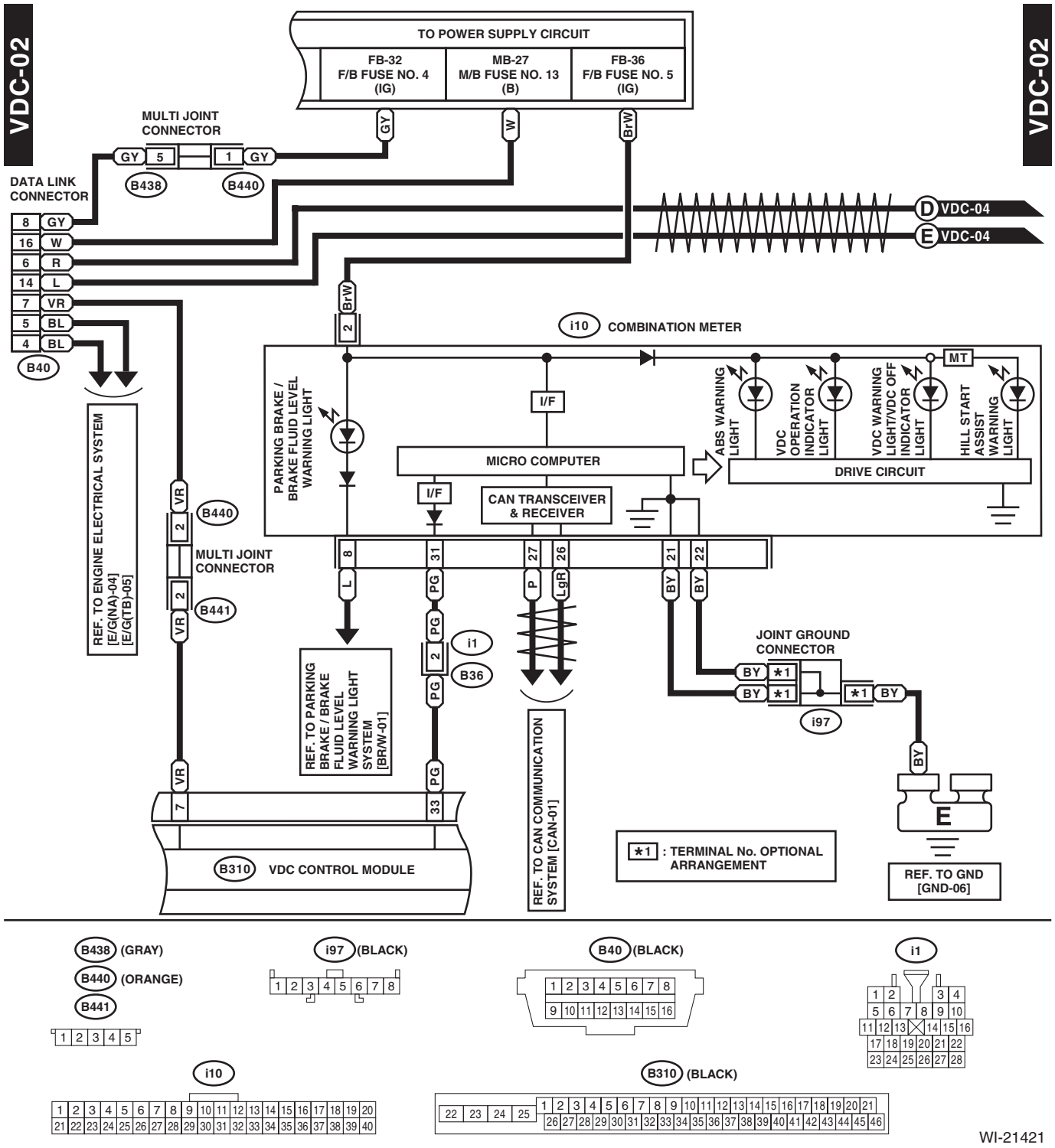
VDC-02
VDC-02
TO POWER SUPPLY CIRCUIT
FB-32
F/B FUSE NO. 4
(IG)
MB-27
M/B FUSE NO. 13
(B)
FB-36
F/B FUSE NO. 5
(IG)
MULTI JOINT CONNECTOR
B438
B440
DATA LINK CONNECTOR
B40
D VDC-04
E VDC-04
i10 COMBINATION METER
MT
PARKING BRAKE / BRAKE FLUID LEVEL WARNING LIGHT
I/F
MICRO COMPUTER
CAN TRANSCEIVER & RECEIVER
ABS WARNING LIGHT
VDC OPERATION INDICATOR LIGHT
VDC WARNING LIGHT/VDC OFF INDICATOR LIGHT
HILL START ASSIST WARNING LIGHT
DRIVE CIRCUIT
REF. TO ENGINE ELECTRICAL SYSTEM [E/G(NA)-04] [E/G(TB)-05]
B441
i1
B36
REF. TO PARKING BRAKE / BRAKE FLUID LEVEL WARNING LIGHT SYSTEM [BR/W-01]
JOINT GROUND CONNECTOR
i97
REF. TO CAN COMMUNICATION SYSTEM [CAN-01]
B310 VDC CONTROL MODULE
*1 : TERMINAL No. OPTIONAL ARRANGEMENT
REF. TO GND [GND-06]
B438 (GRAY)
B440 (ORANGE)
B441
i97 (BLACK)
B40 (BLACK)
i1
i10
B310 (BLACK)

WI-21421

VDC-03

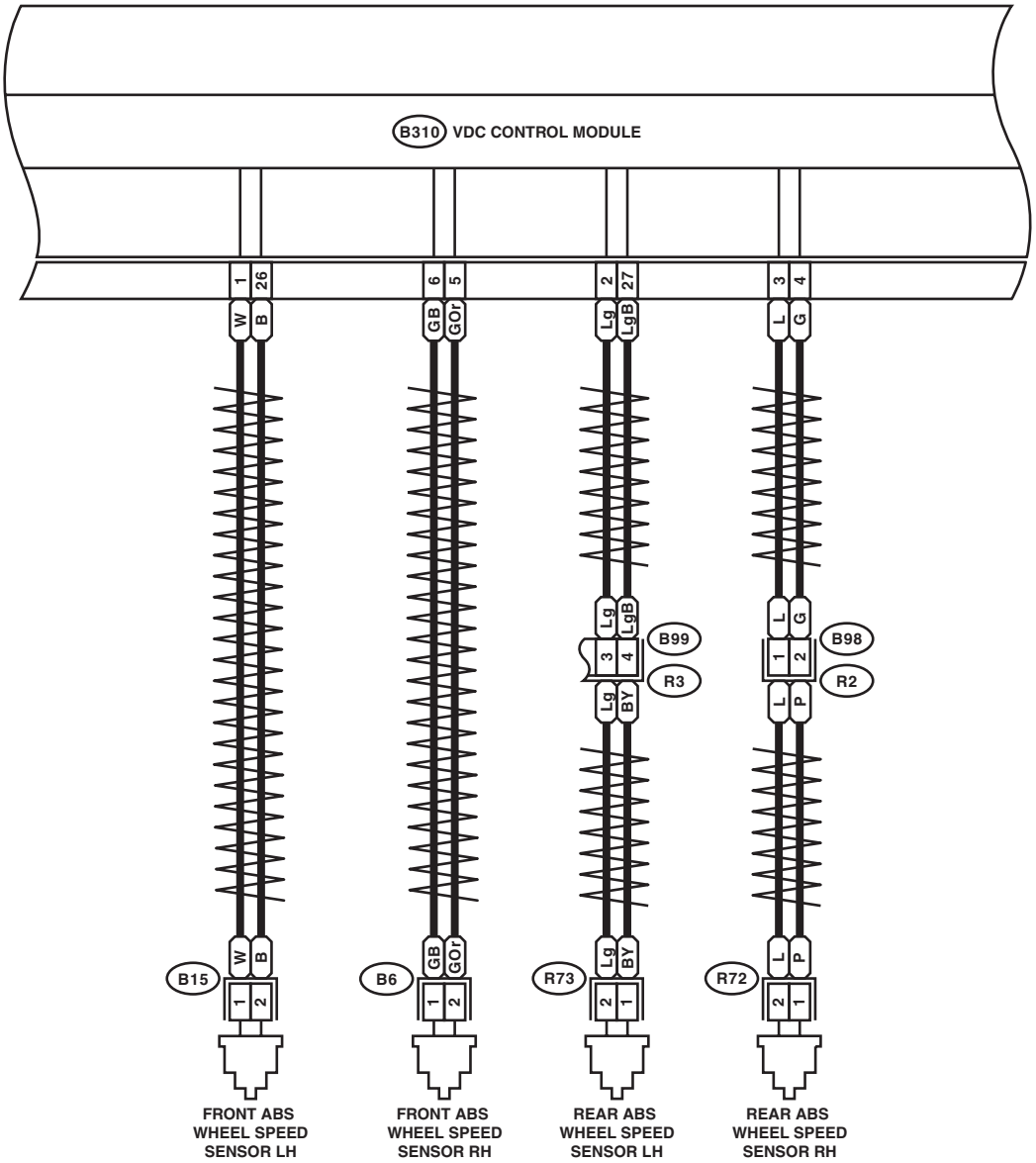

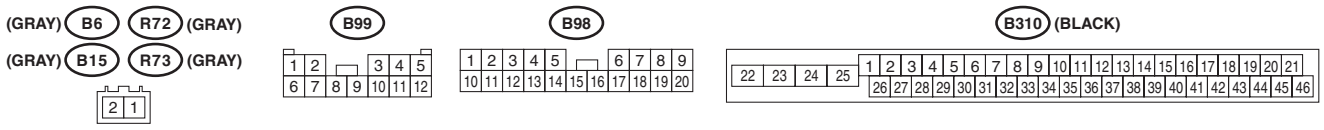

WI-21422

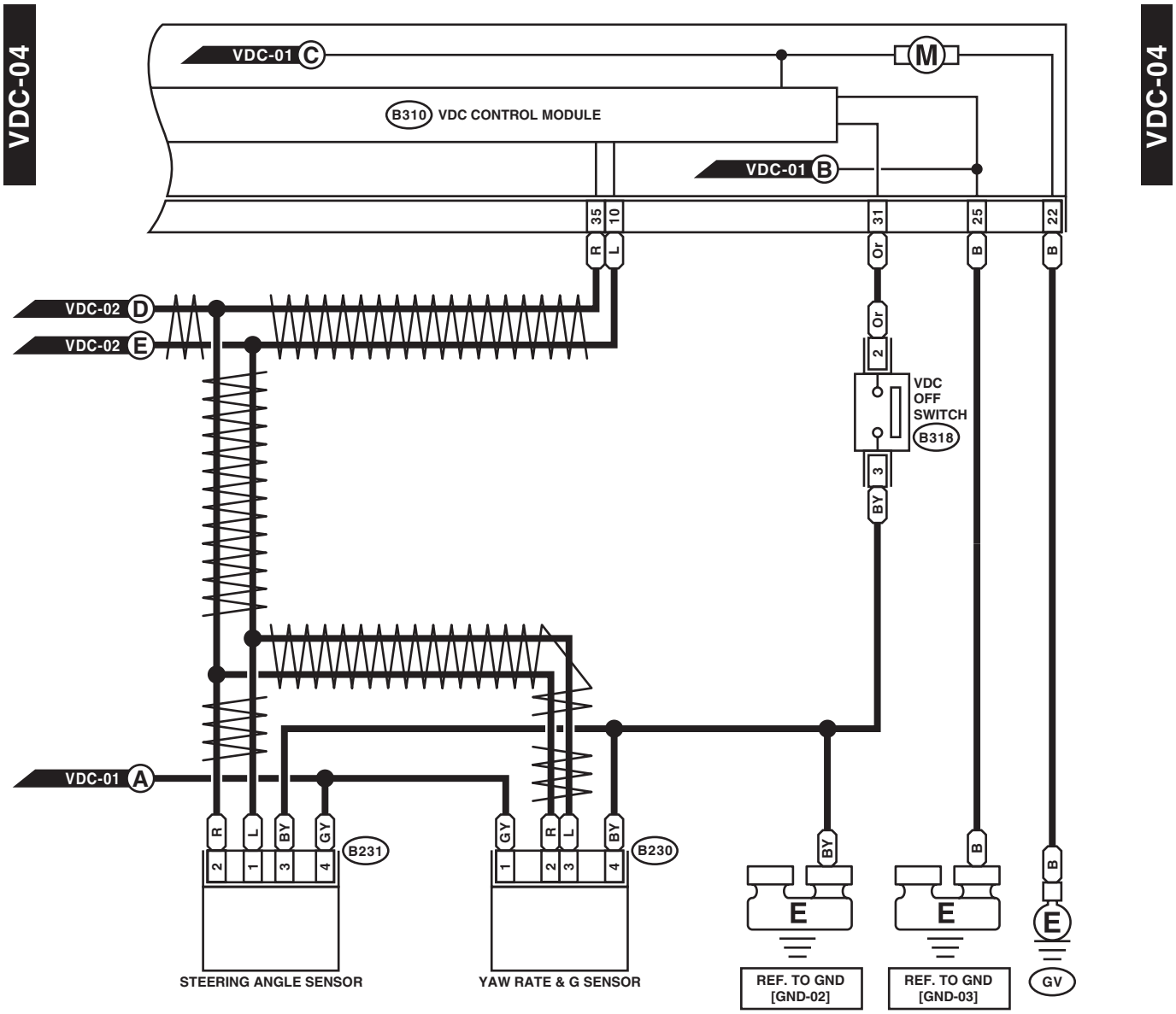
VDC-04
VDC-01 C
M
B310 VDC CONTROL MODULE
VDC-01 B
35
10
31
25
22
R
L
Or
B
B
VDC-02 D
VDC-02 E
2
Or
VDC OFF SWITCH
B318
3
BY
VDC-01 A
R
L
BY
GY
B231
2
1
3
4
GY
R
L
BY
B230
1
2
3
4
BY
B
B
E
E
E
STEERING ANGLE SENSOR
YAW RATE & G SENSOR
REF. TO GND [GND-02]
REF. TO GND [GND-03]
GV

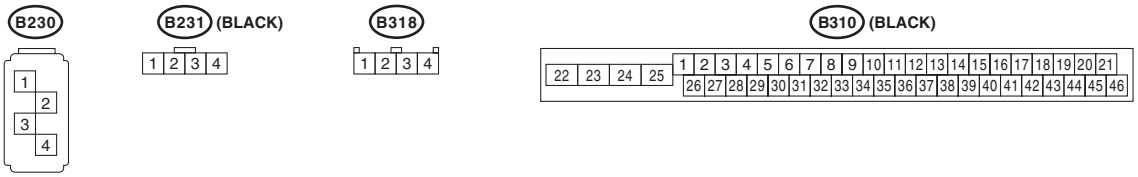
B230
1
2
3
4
B231 (BLACK)
1 2 3 4
B318
1 2 3 4
B310 (BLACK)
22 23 24 25
1 2 3 4 5 6 7 8 9 10 11 12 13 14 15 16 17 18 19 20 21
26 27 28 29 30 31 32 33 34 35 36 37 38 39 40 41 42 43 44 45 46

WI-21423

14. Tire Pressure Monitoring System

A: WIRING DIAGRAM

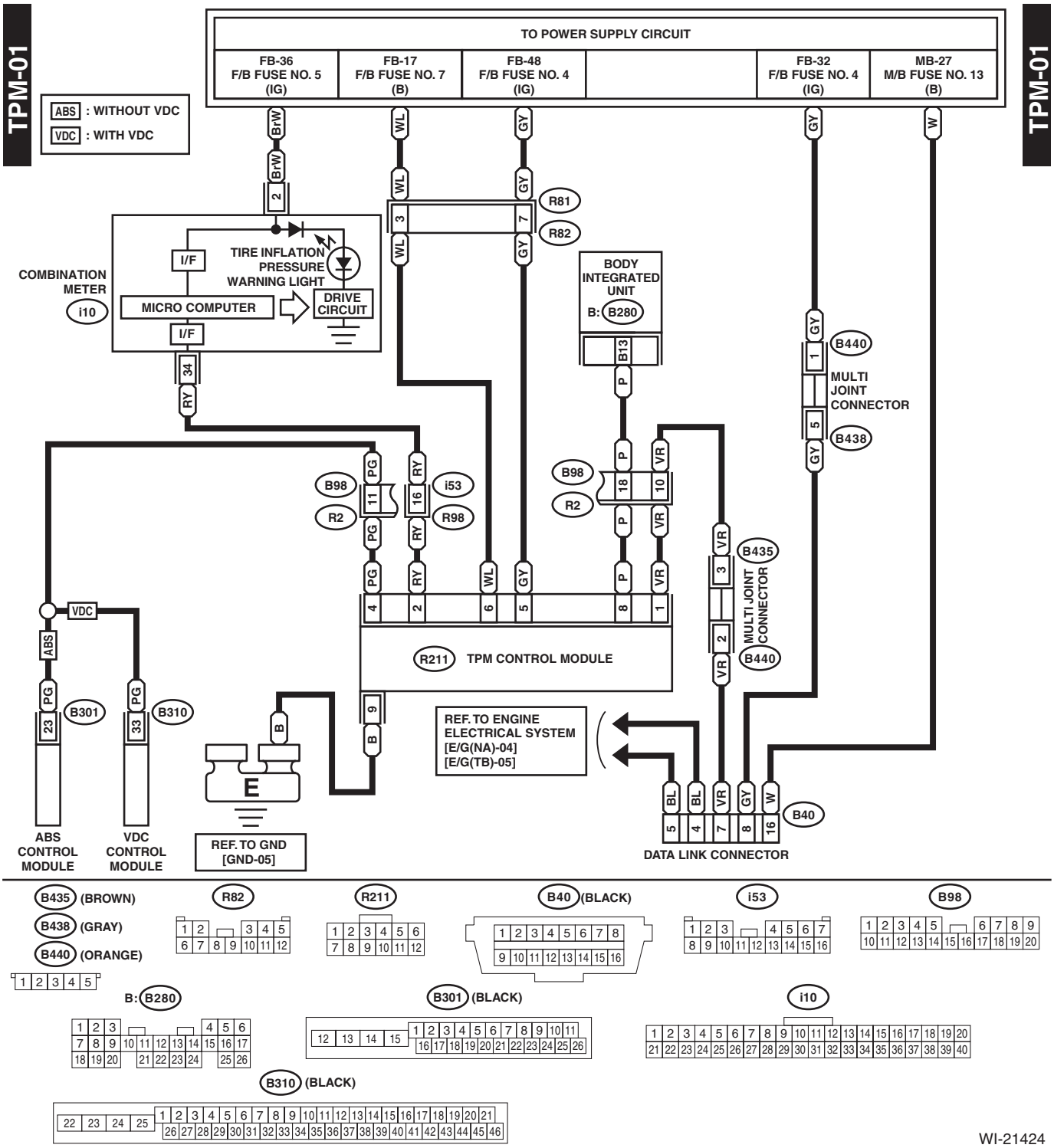

15. Air Conditioning System

A: WIRING DIAGRAM

1. MANUAL A/C MODEL

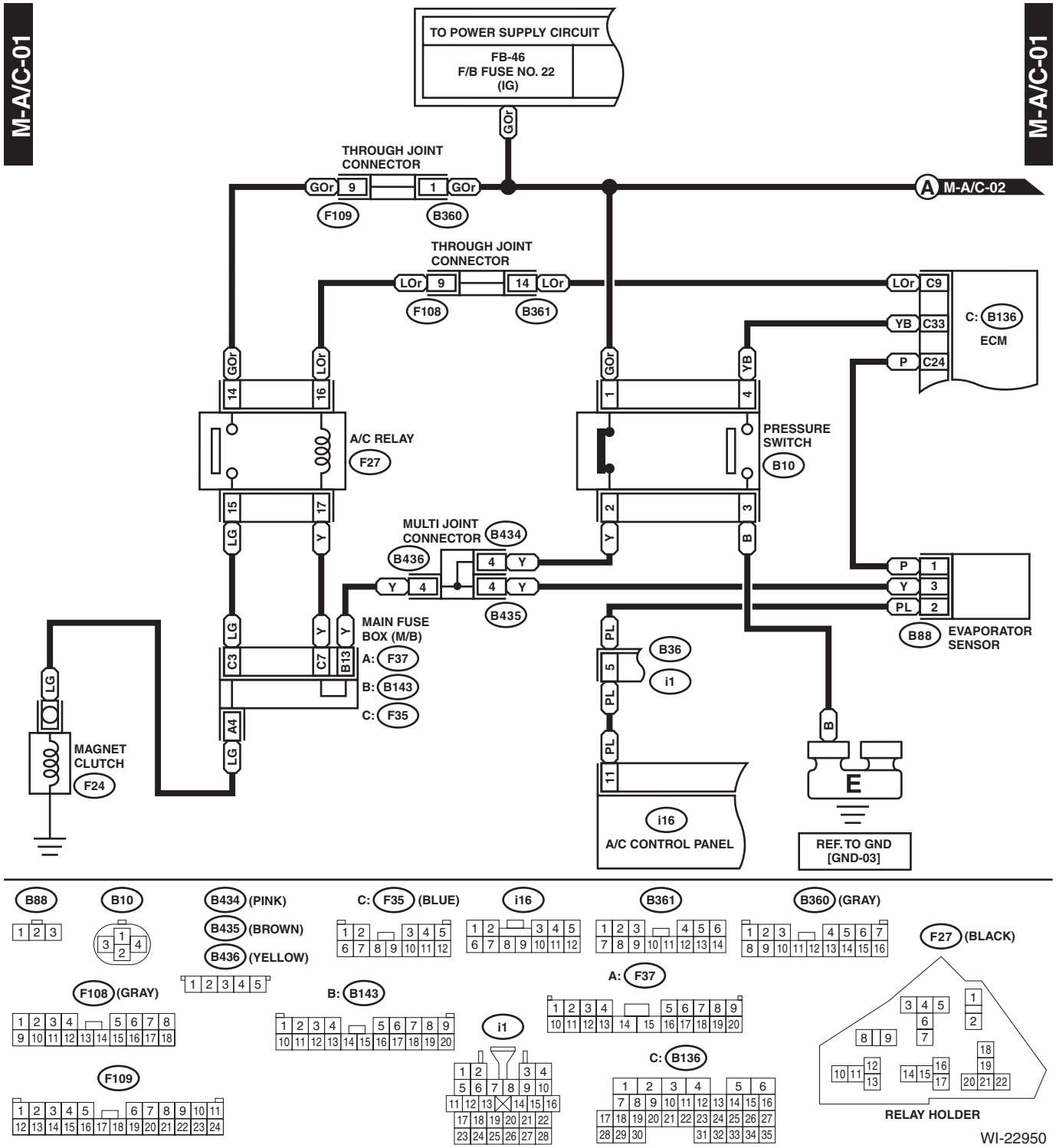

WIRING SYSTEM

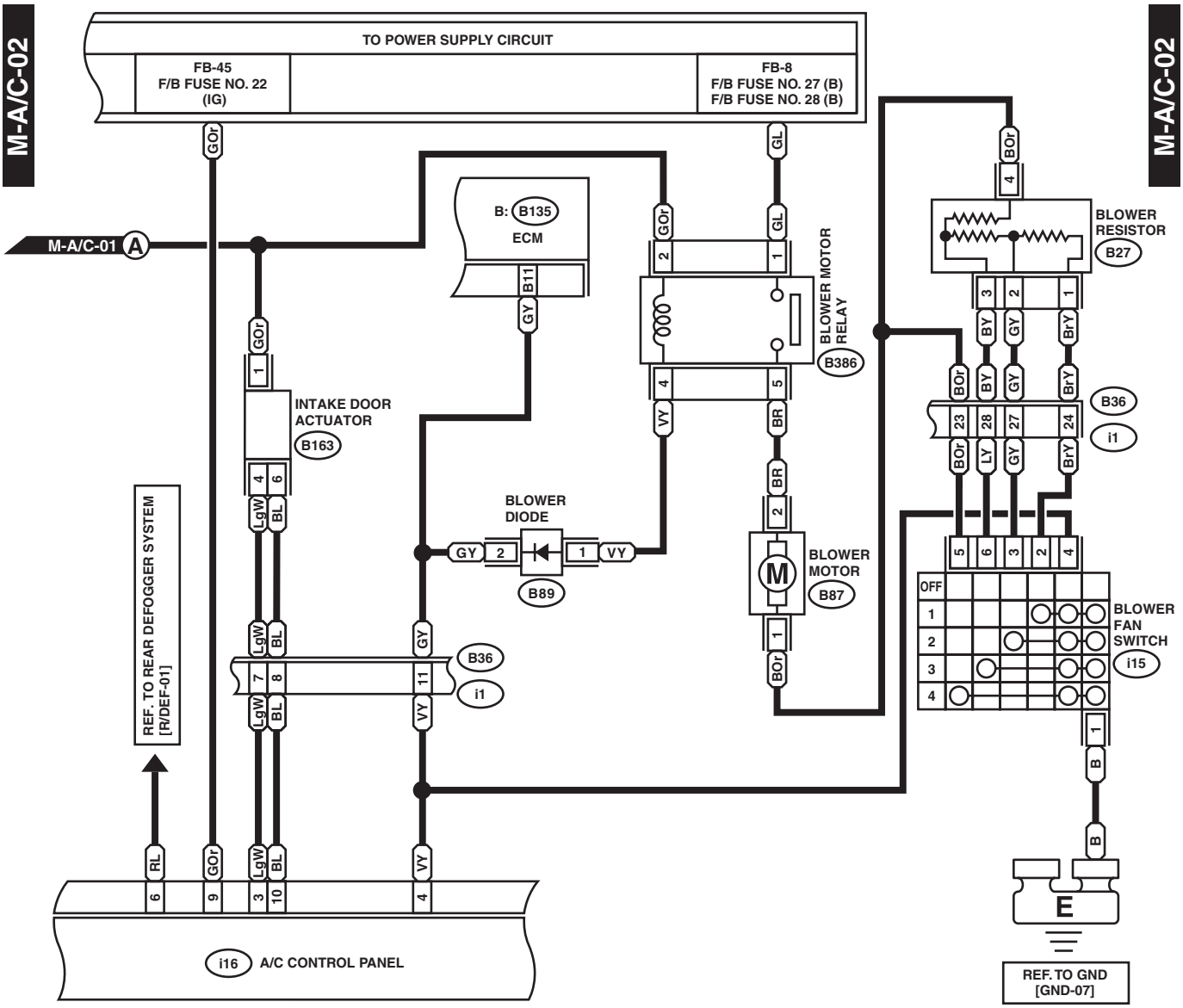

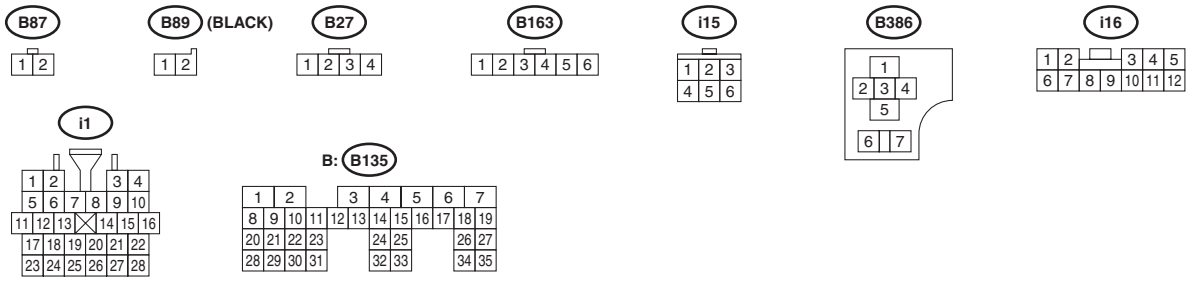

WI-21425

M-A/C-03

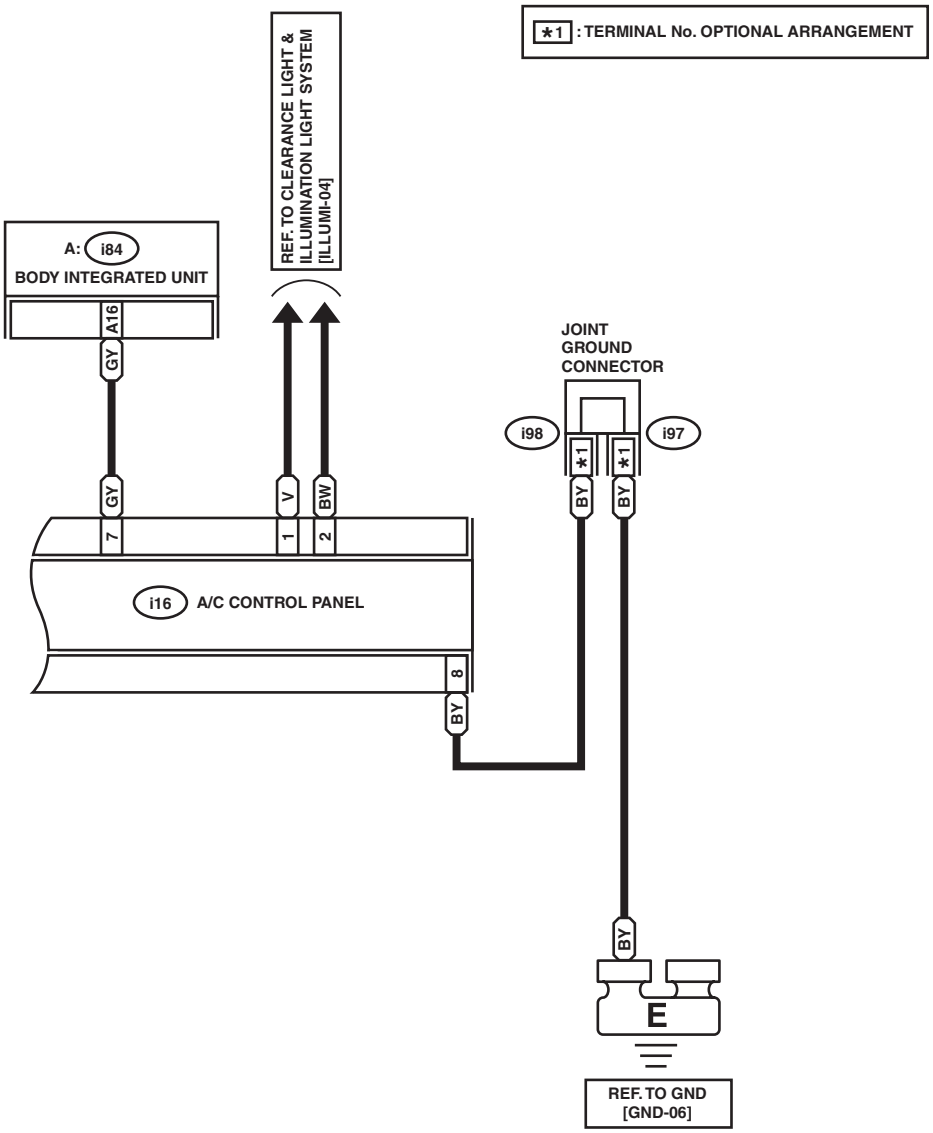

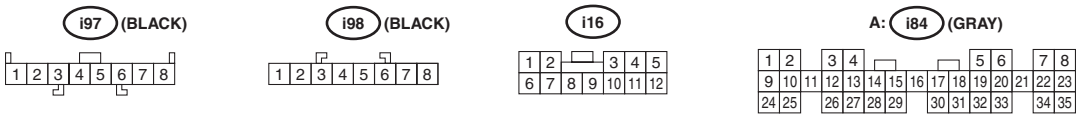

WI-21426

2. AUTO A/C MODEL

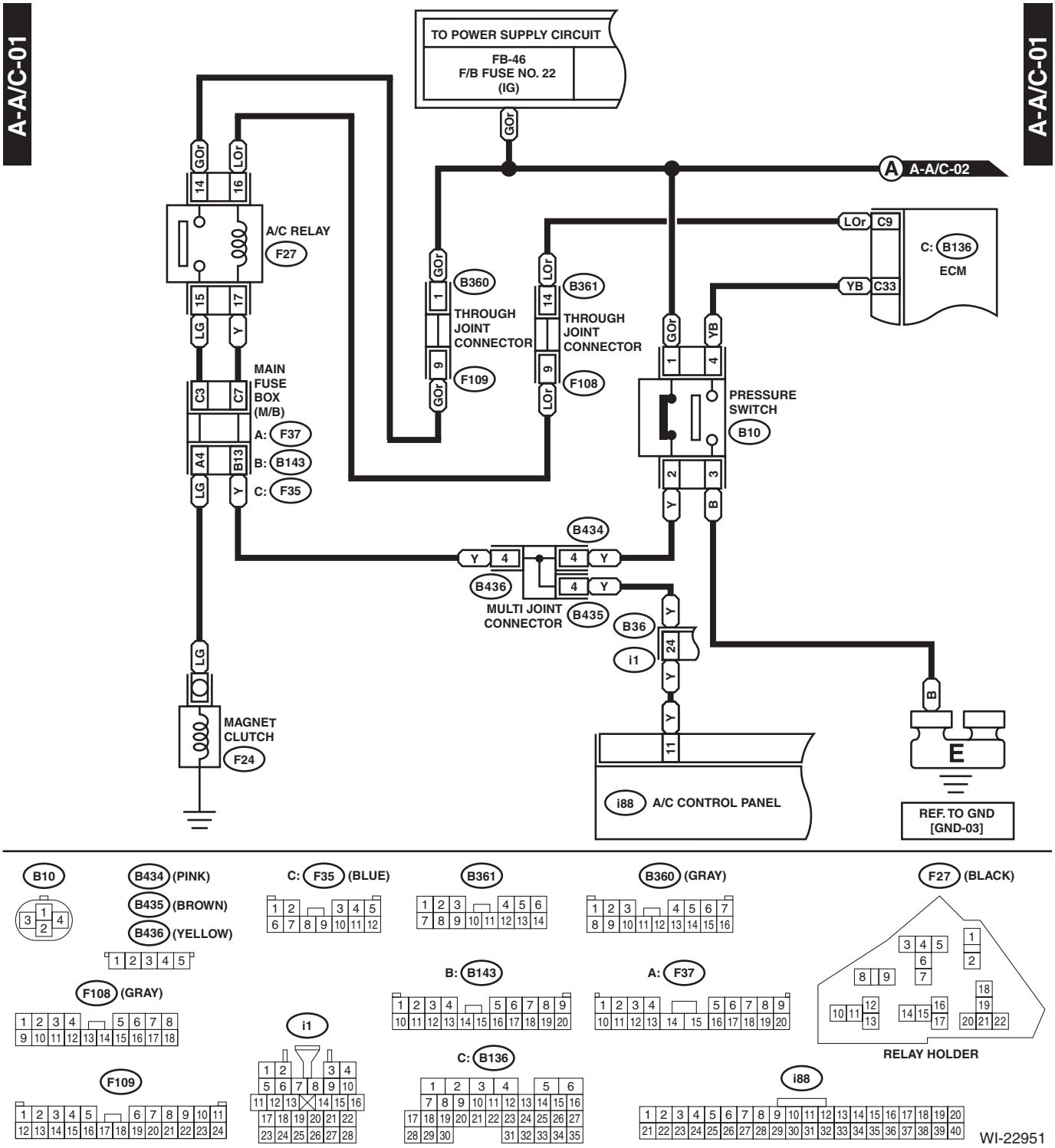

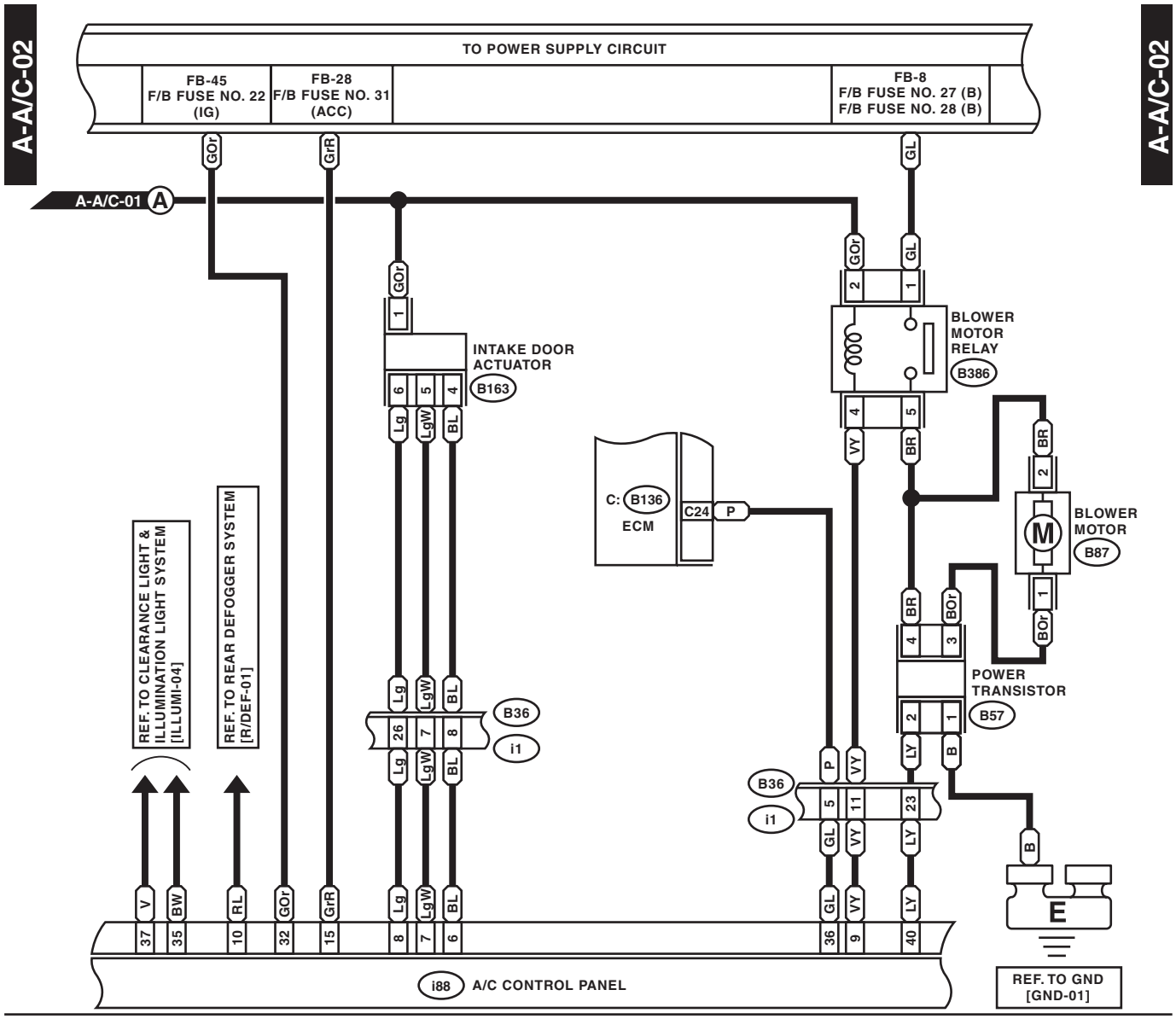
A-A/C-02
TO POWER SUPPLY CIRCUIT
FB-45
F/B FUSE NO. 22
(IG)
FB-28
F/B FUSE NO. 31
(ACC)
FB-8
F/B FUSE NO. 27 (B)
F/B FUSE NO. 28 (B)
A-A/C-01 A
INTAKE DOOR
ACTUATOR
B163
BLOWER
MOTOR
RELAY
B386
C: B136
ECM
C24
P
BLOWER
MOTOR
B87
M
POWER
TRANSISTOR
B57
B36
i1
REF. TO CLEARANCE LIGHT &
ILLUMINATION LIGHT SYSTEM
[ILLUMI-04]
REF. TO REAR DEFOGGER SYSTEM
[R/DEF-01]
i88 A/C CONTROL PANEL
E
REF. TO GND
[GND-01]

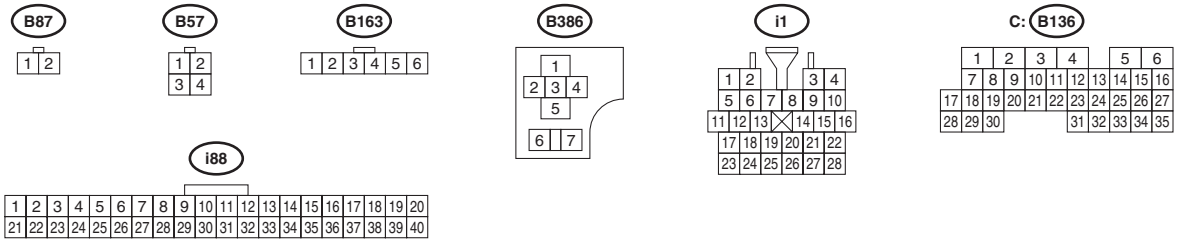
B87
B57
B163
B386
i1
C: B136
i88

WI-16925

A-A/C-03

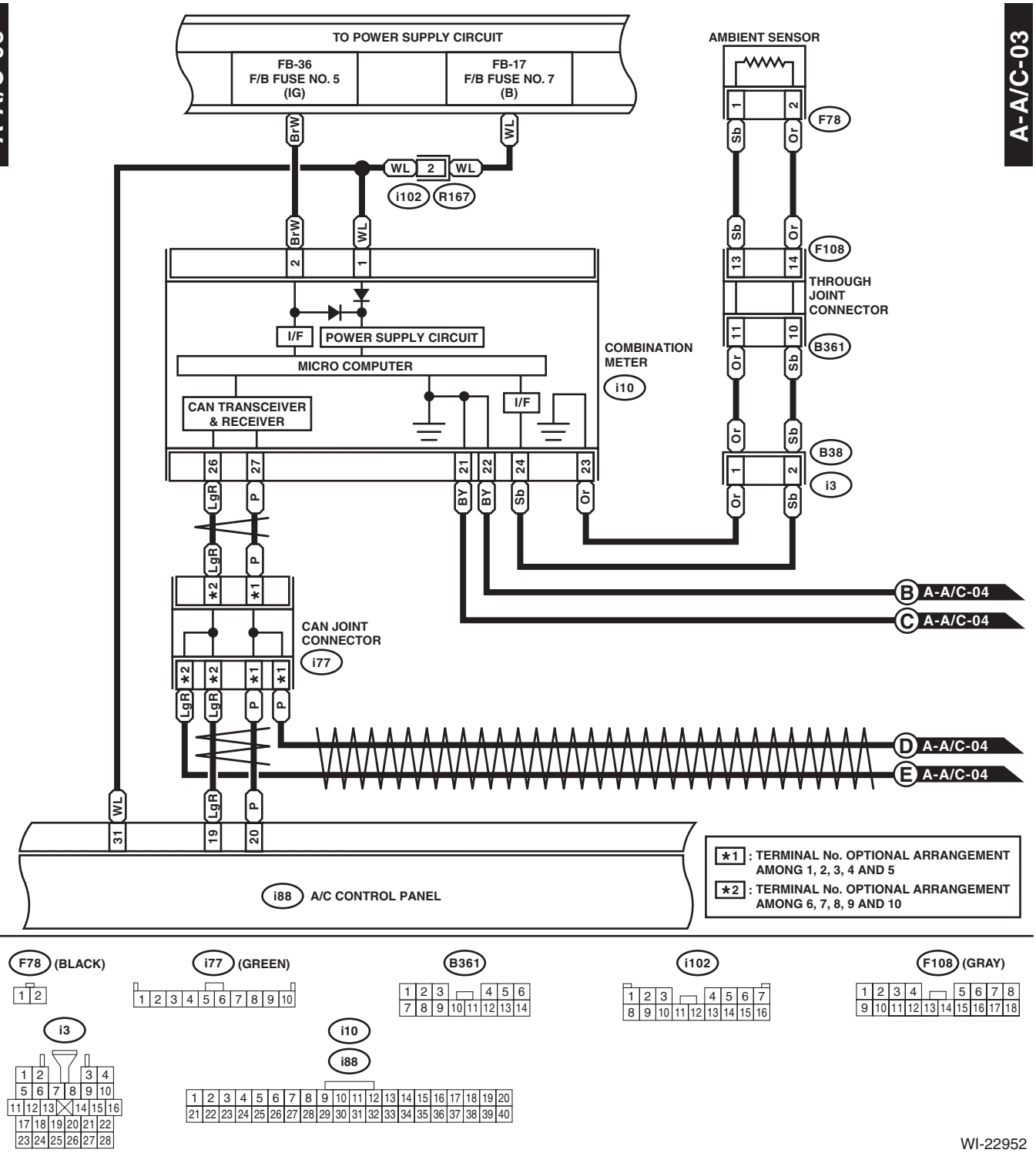

WI-22952

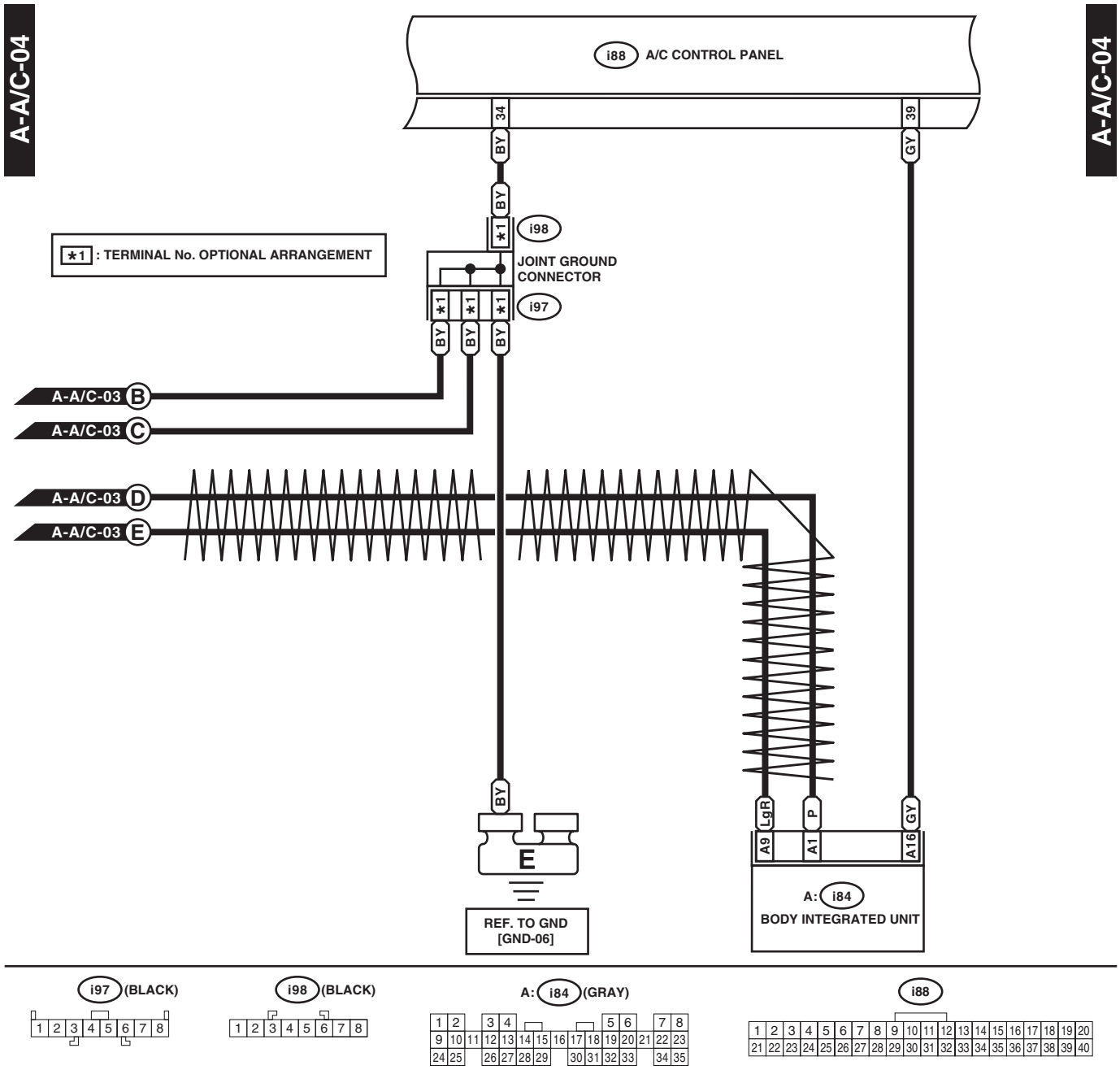
A-A/C-04
A-A/C-04
i88 A/C CONTROL PANEL
34
39
BY
GY
BY
*1
i98
*1 : TERMINAL No. OPTIONAL ARRANGEMENT
JOINT GROUND CONNECTOR
*1
*1
*1
i97
BY
BY
BY
A-A/C-03 B
A-A/C-03 C
A-A/C-03 D
A-A/C-03 E
BY
E
REF. TO GND [GND-06]
LgR
P
GY
A9
A1
A16
A: i84
BODY INTEGRATED UNIT
i97 (BLACK)
i98 (BLACK)
A: i84 (GRAY)
i88

WI-21427

A-A/C-05

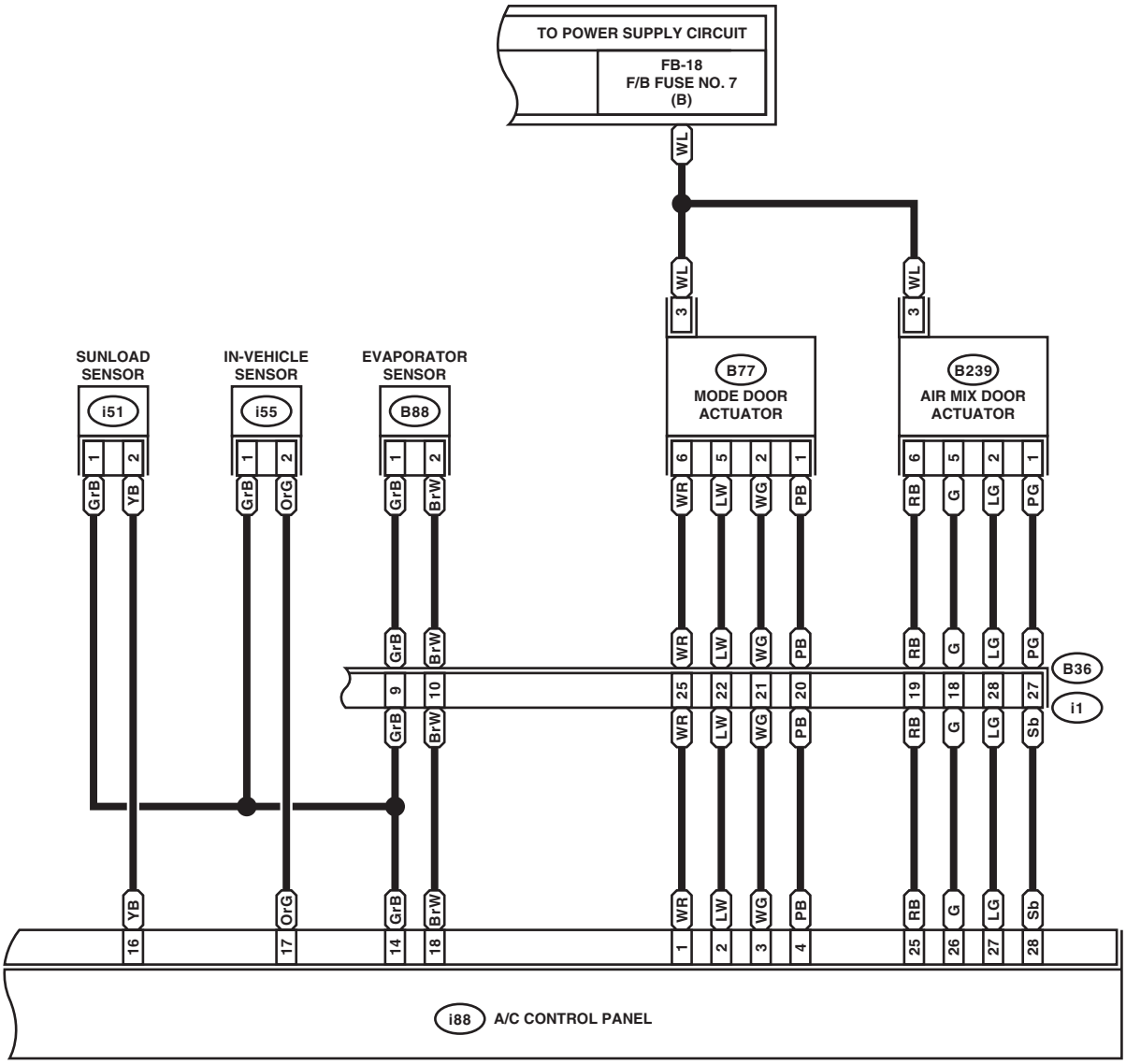

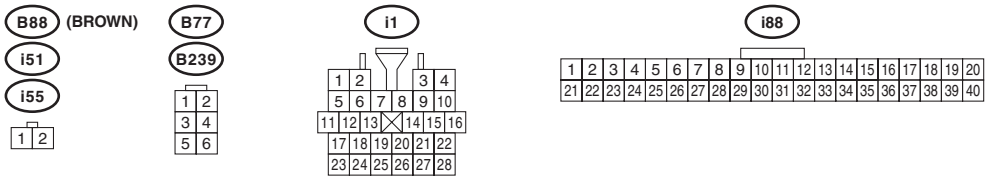

WI-17954

16. Airbag System

A: WIRING DIAGRAM

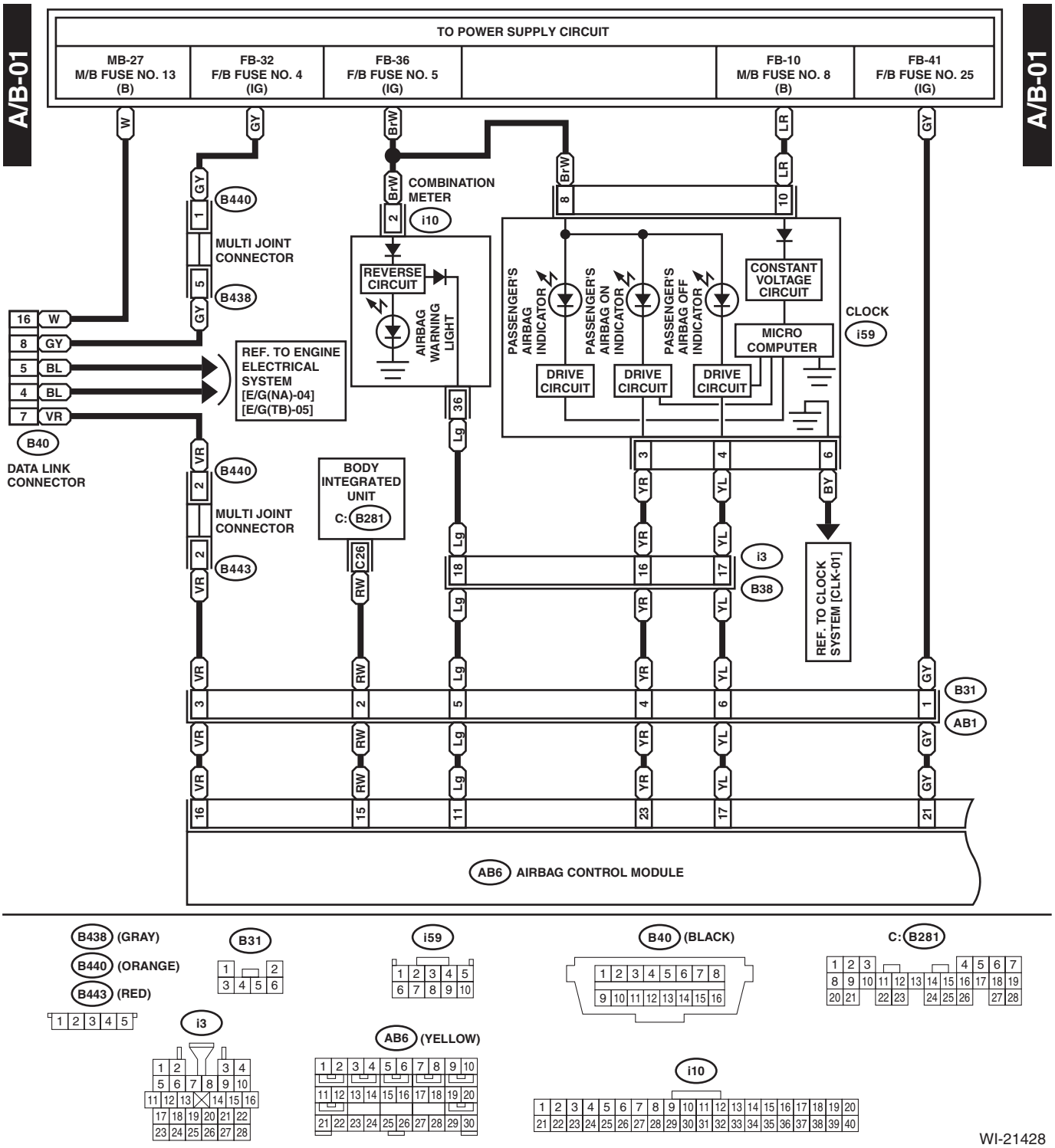

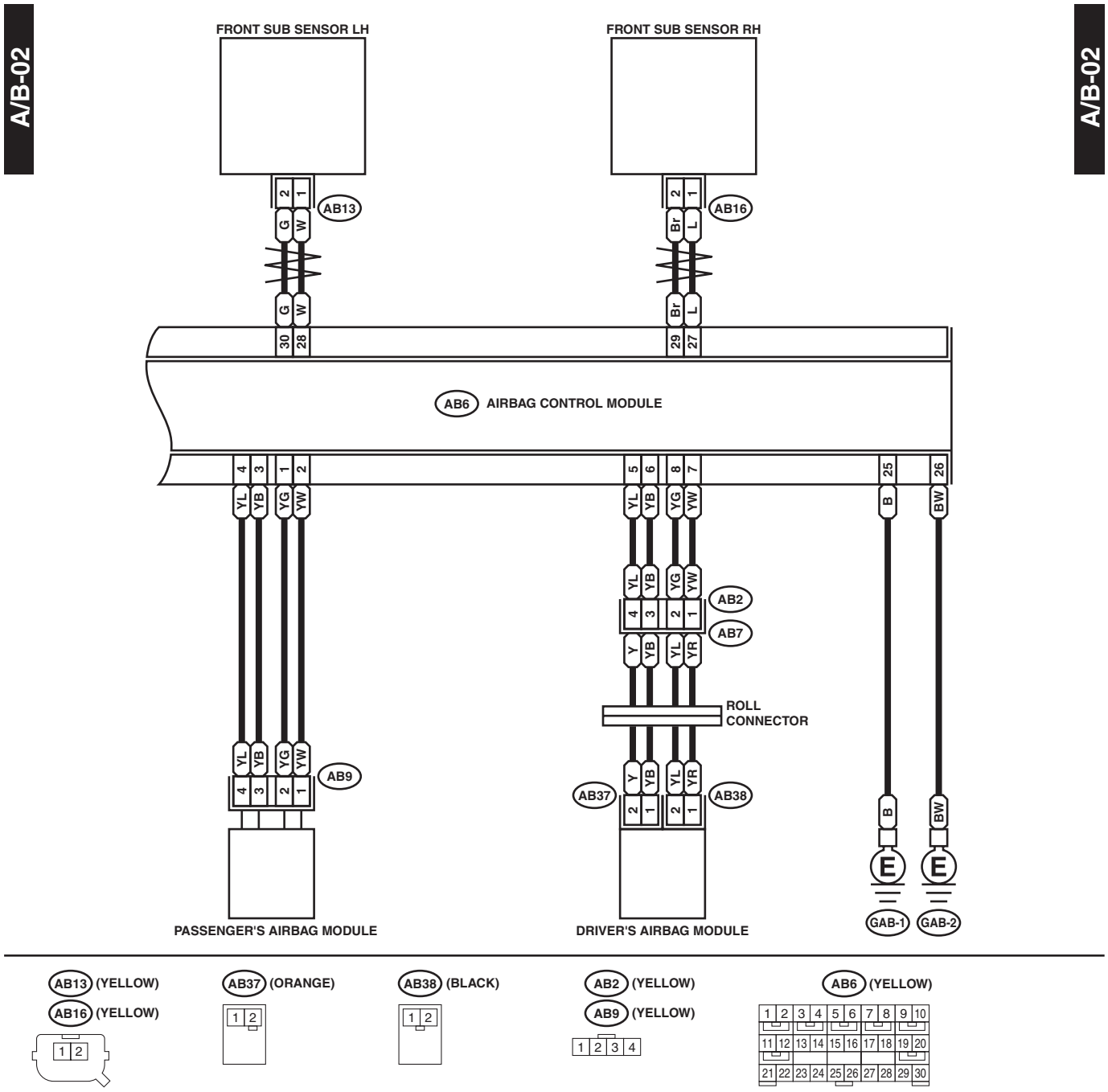
A/B-02
A/B-02
FRONT SUB SENSOR LH
FRONT SUB SENSOR RH
AB13
AB16
AB6 AIRBAG CONTROL MODULE
AB2
AB7
ROLL CONNECTOR
AB9
AB37
AB38
PASSENGER'S AIRBAG MODULE
DRIVER'S AIRBAG MODULE
GAB-1
GAB-2
AB13 (YELLOW)
AB16 (YELLOW)
AB37 (ORANGE)
AB38 (BLACK)
AB2 (YELLOW)
AB9 (YELLOW)
AB6 (YELLOW)

WI-21401

A/B-03

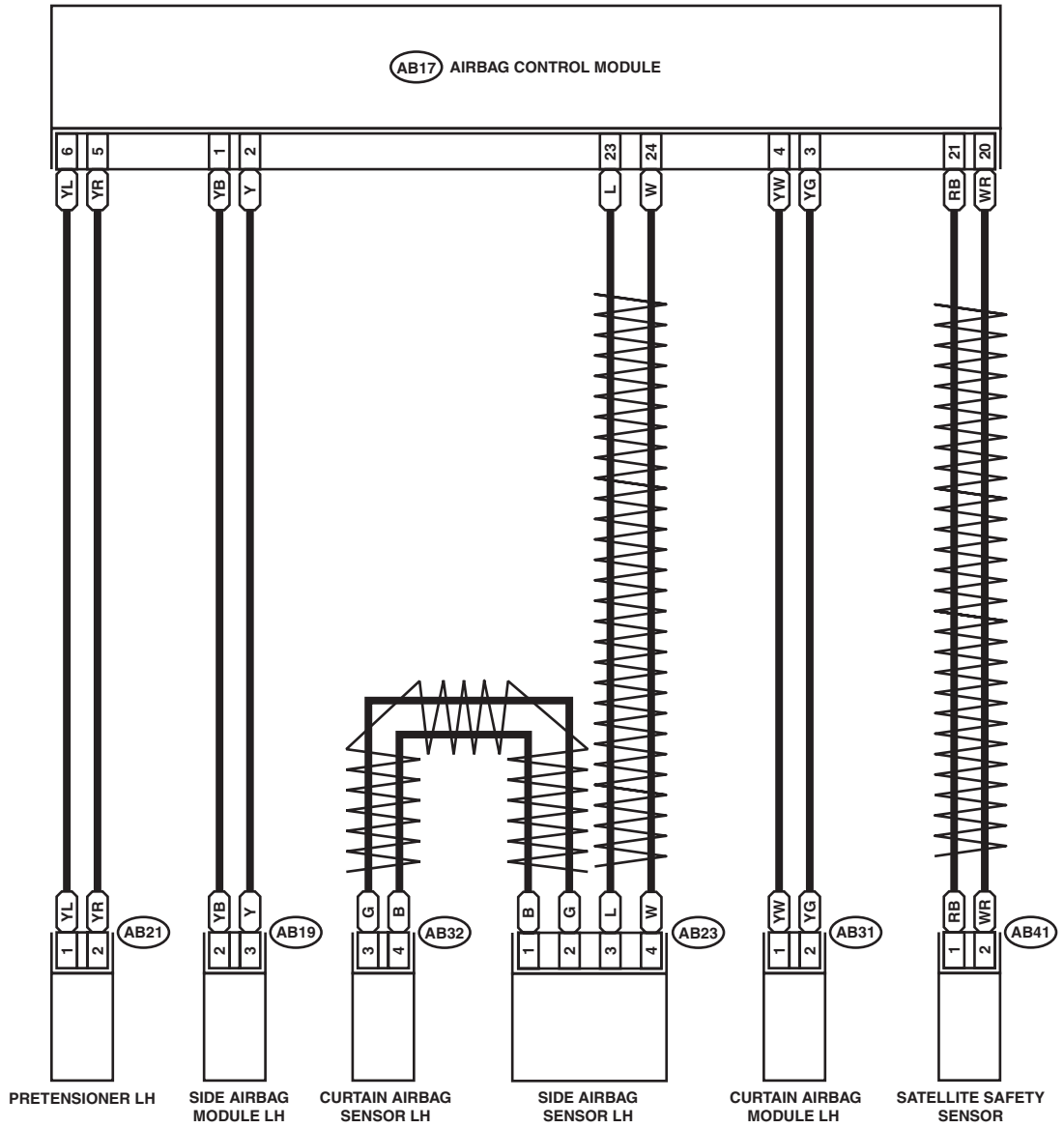

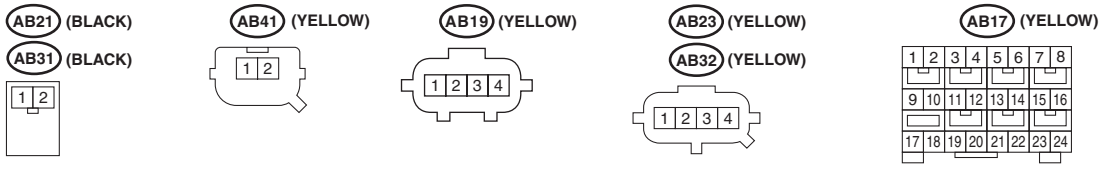

WI-22953

A/B-04

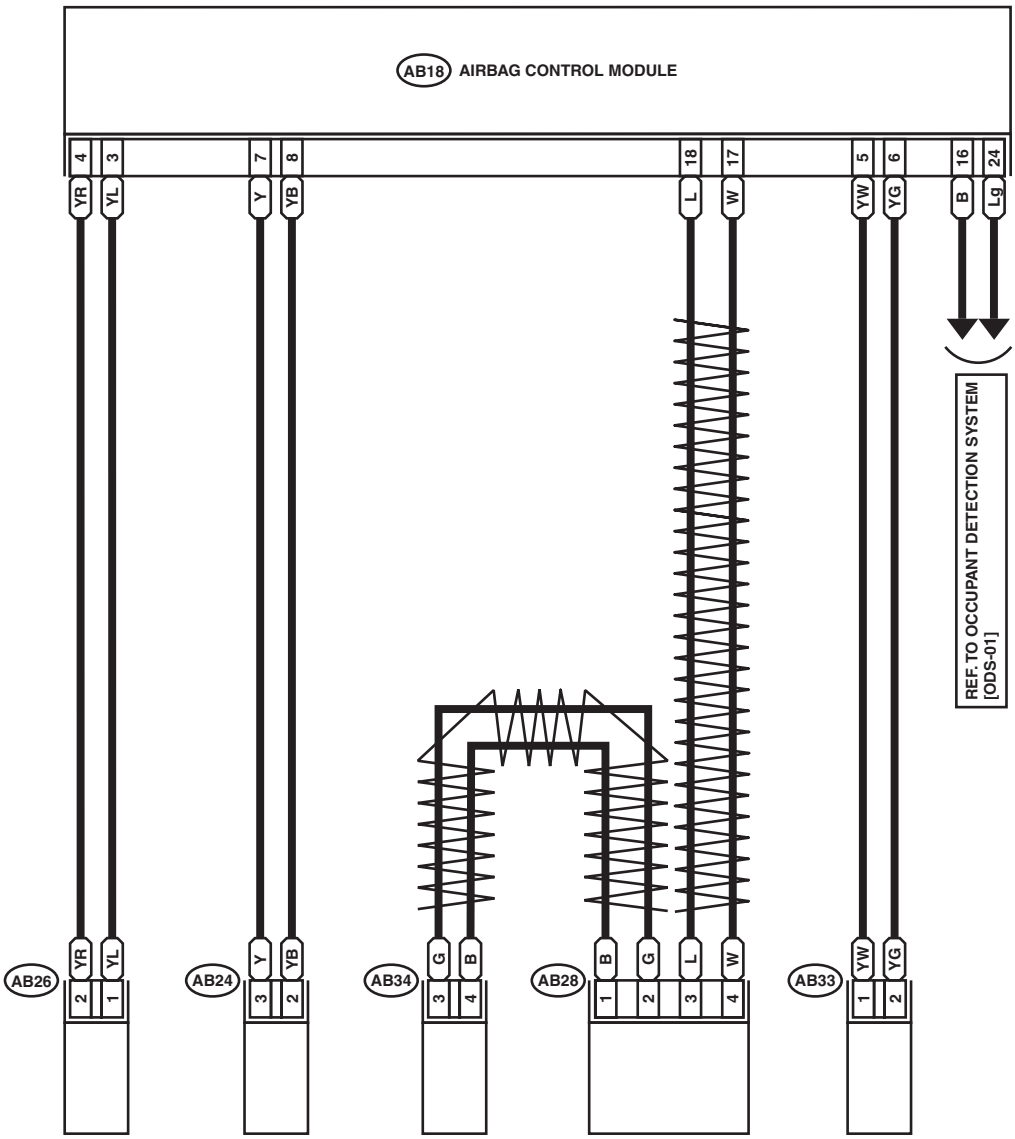

A/B-04

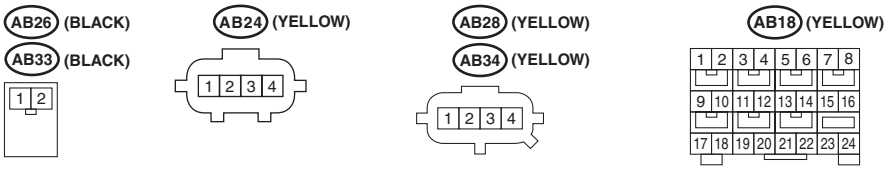

WI-22954

17.Seat Belt Warning System

A: WIRING DIAGRAM

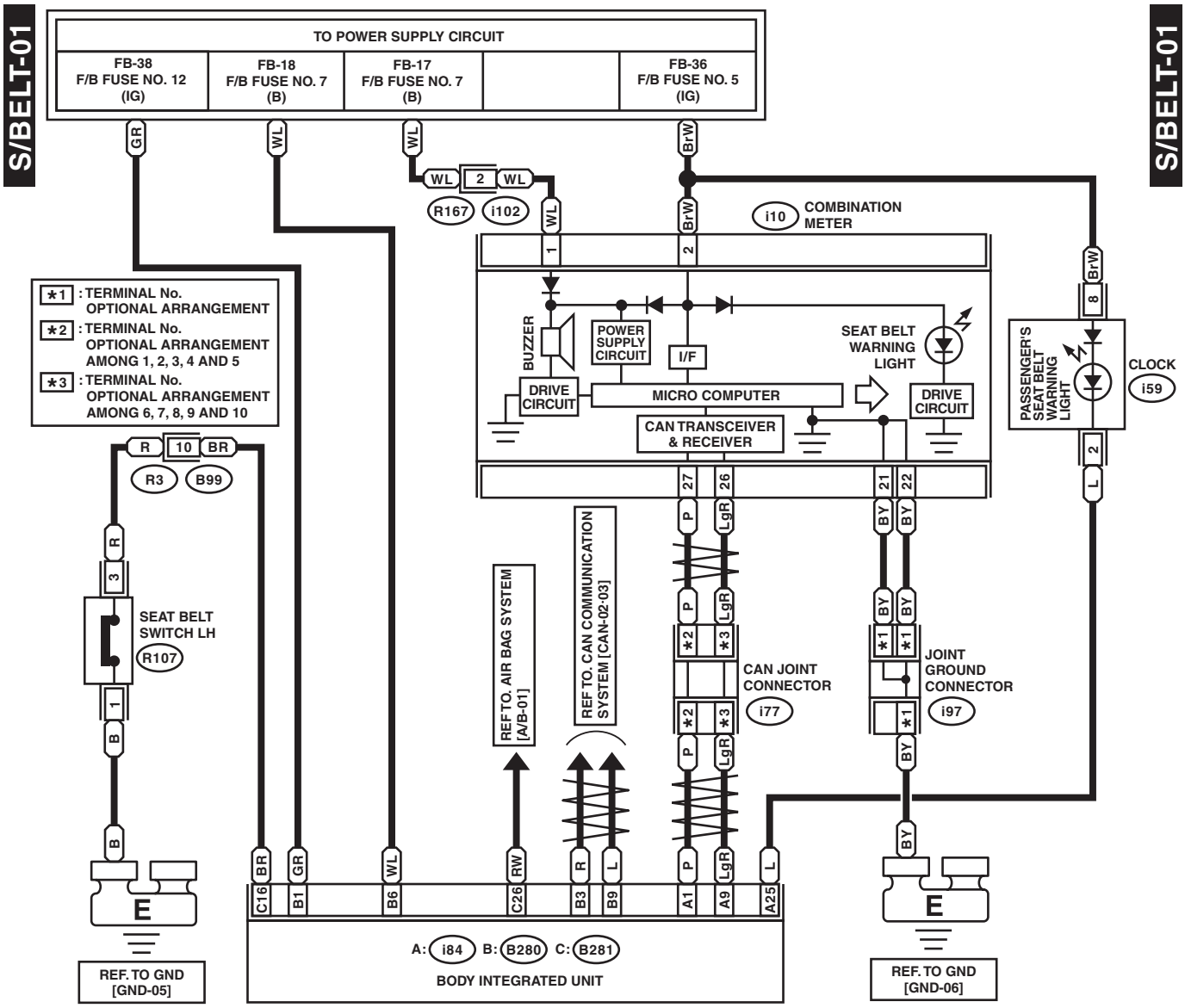

WI-21429

18.Occupant Detection System

A: WIRING DIAGRAM

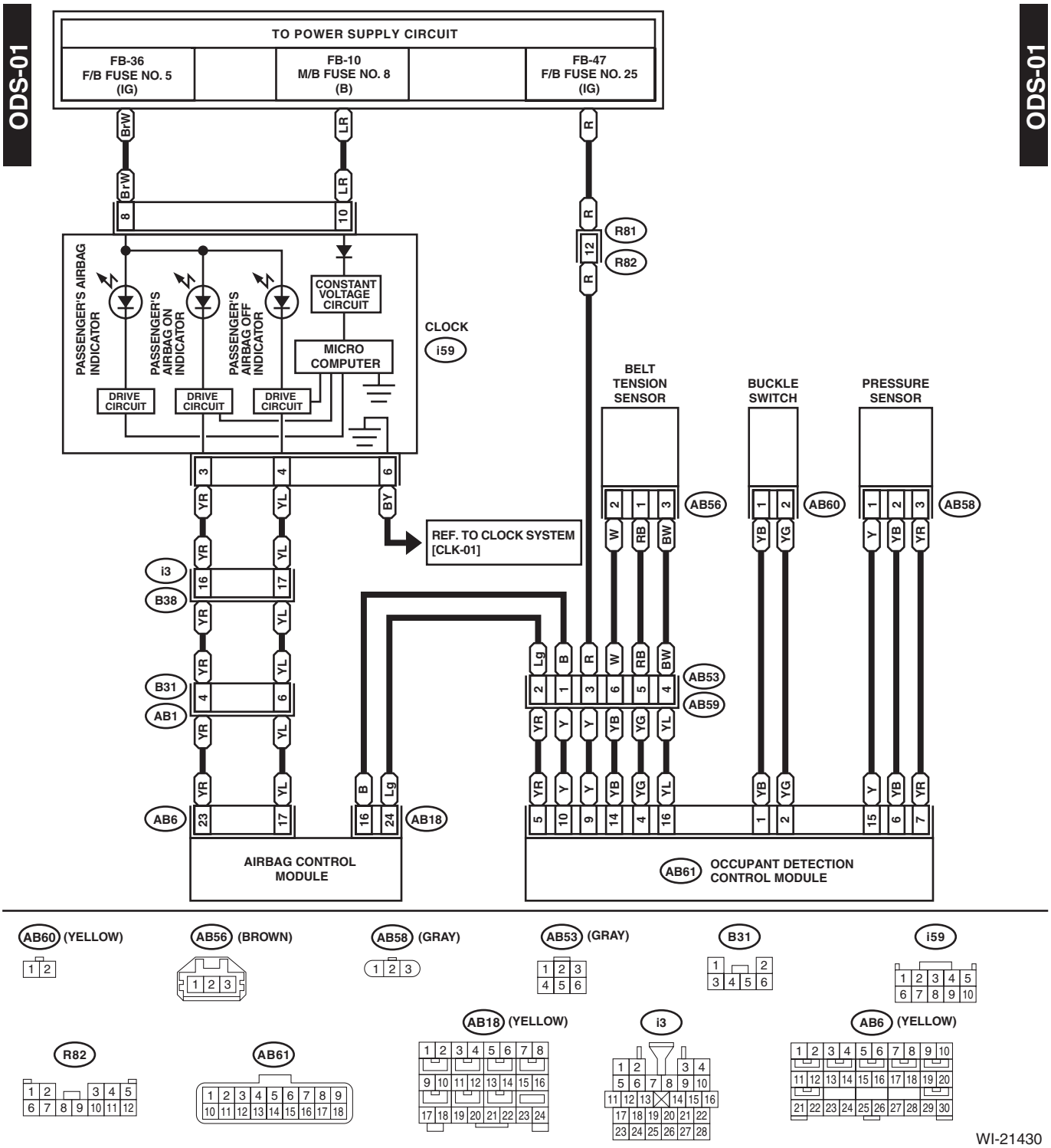

19.Seat Heater System

A: WIRING DIAGRAM

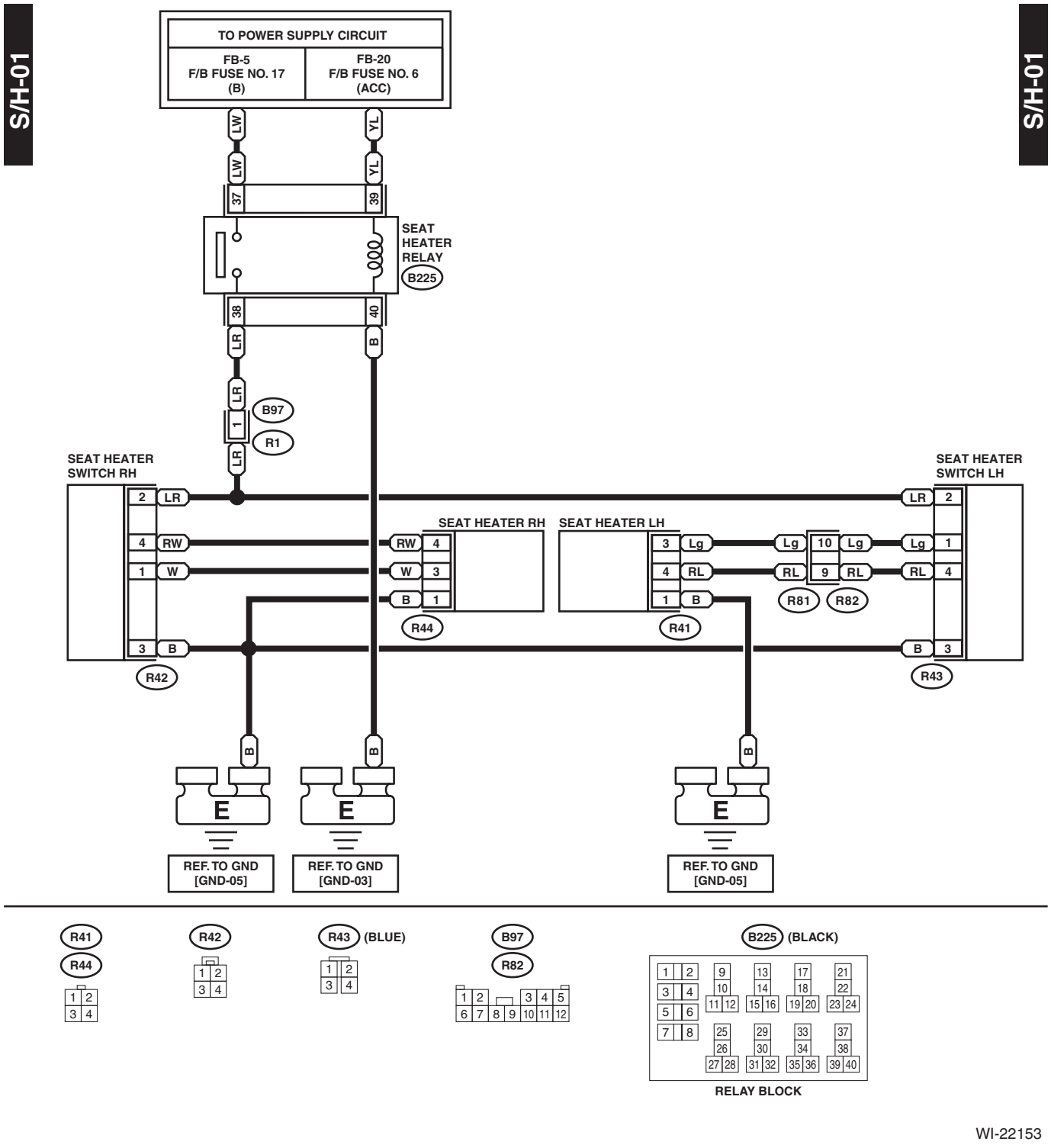

20.Headlight System

A: WIRING DIAGRAM

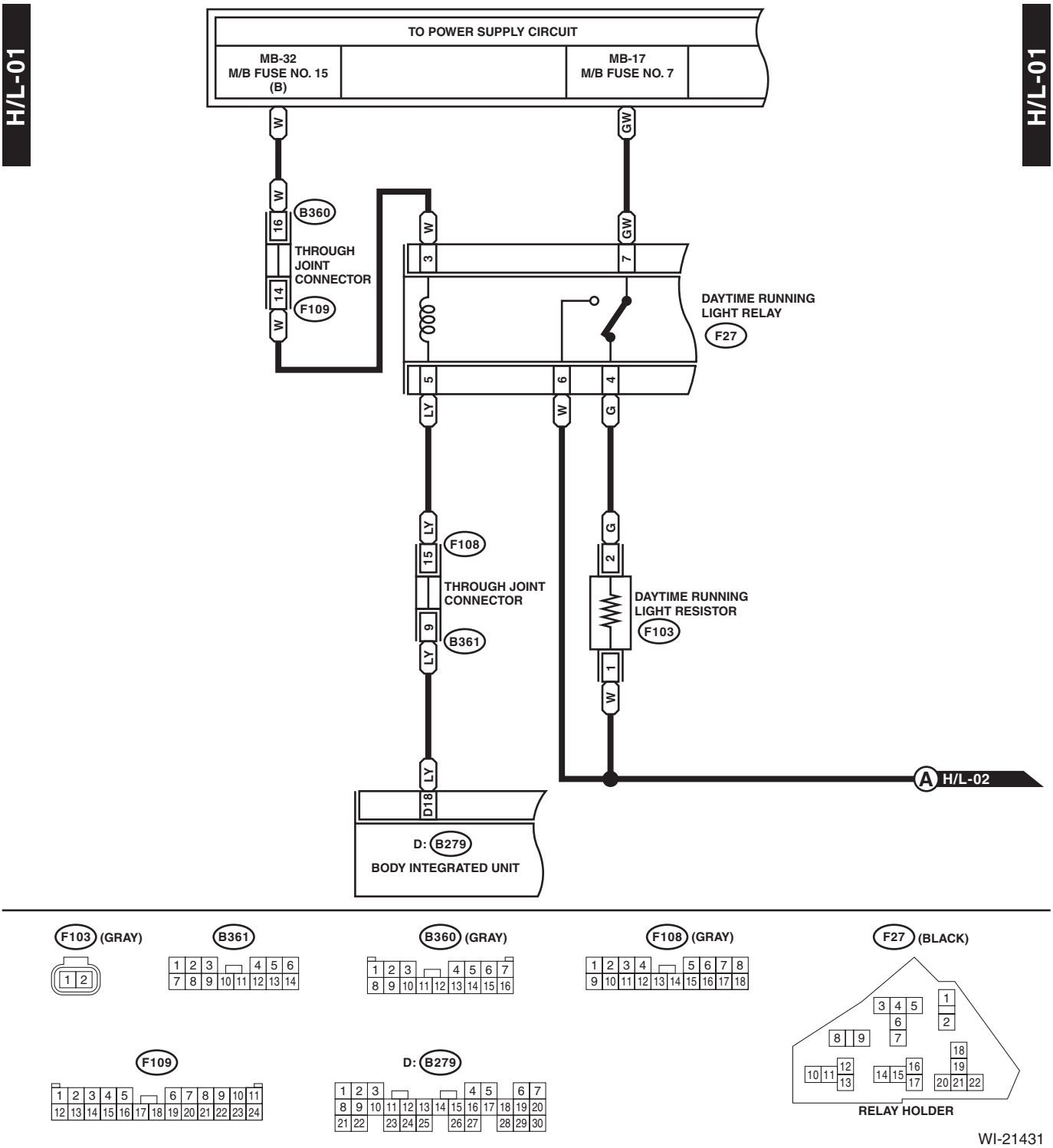

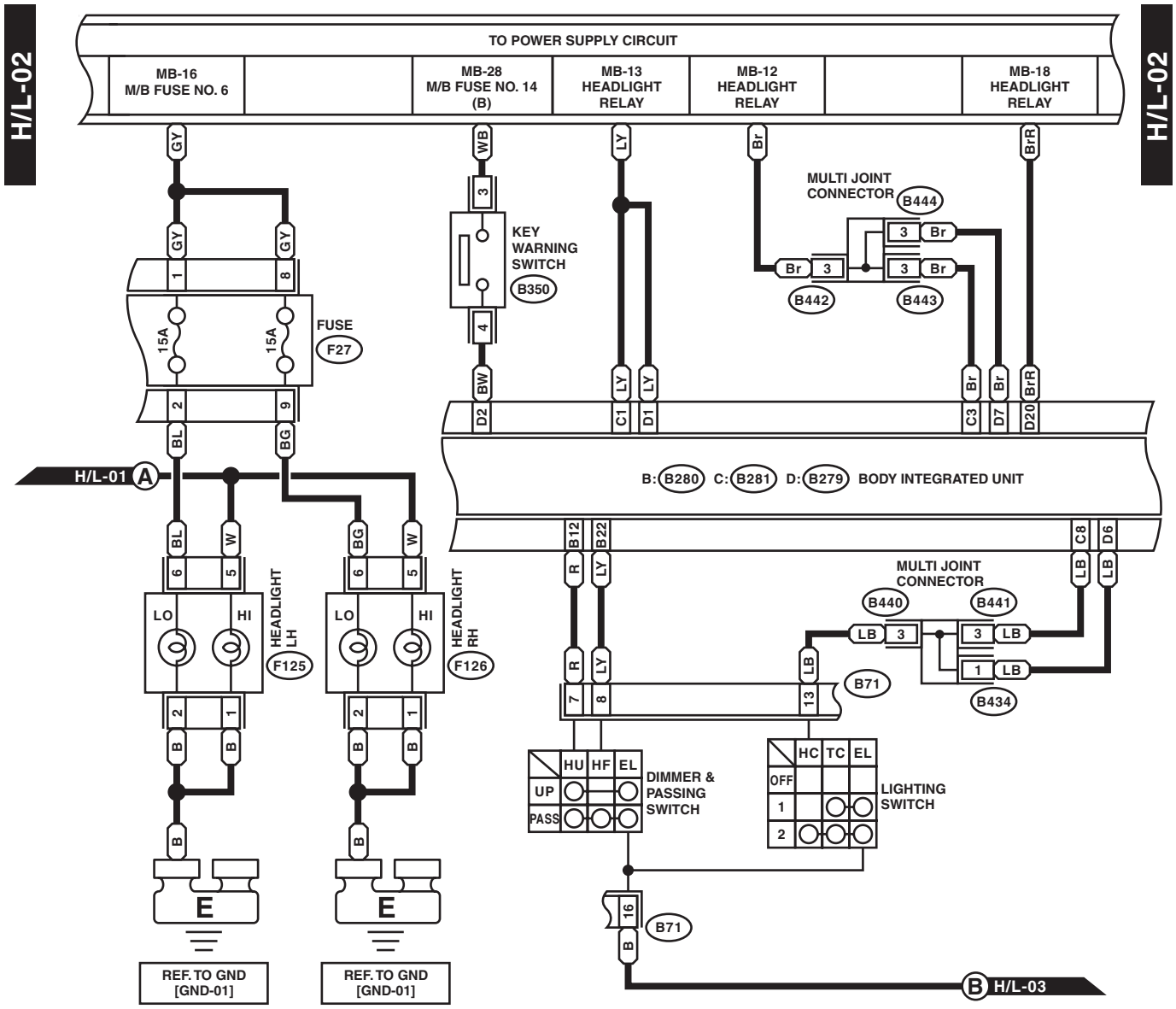
H/L-02
TO POWER SUPPLY CIRCUIT
MB-16 M/B FUSE NO. 6
MB-28 M/B FUSE NO. 14 (B)
MB-13 HEADLIGHT RELAY
MB-12 HEADLIGHT RELAY
MB-18 HEADLIGHT RELAY
KEY WARNING SWITCH
B350
MULTI JOINT CONNECTOR
B444
B442
B443
FUSE
F27
15A
H/L-01
B: B280 C: B281 D: B279 BODY INTEGRATED UNIT
HEADLIGHT LH
F125
HEADLIGHT RH
F126
LO
HI
MULTI JOINT CONNECTOR
B440
B441
B434
B71
DIMMER & PASSING SWITCH
HU
HF
EL
UP
PASS
LIGHTING SWITCH
HC
TC
OFF
REF. TO GND [GND-01]
REF. TO GND [GND-01]
H/L-03

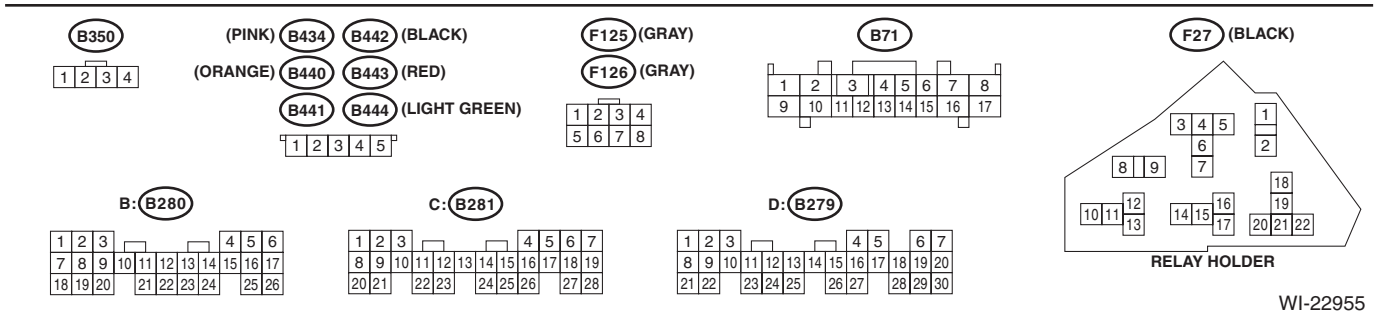
B350
(PINK) B434 B442 (BLACK)
(ORANGE) B440 B443 (RED)
B441 B444 (LIGHT GREEN)
F125 (GRAY)
F126 (GRAY)
B71
F27 (BLACK)
B: B280
C: B281
D: B279
RELAY HOLDER
WI-22955

WIRING SYSTEM

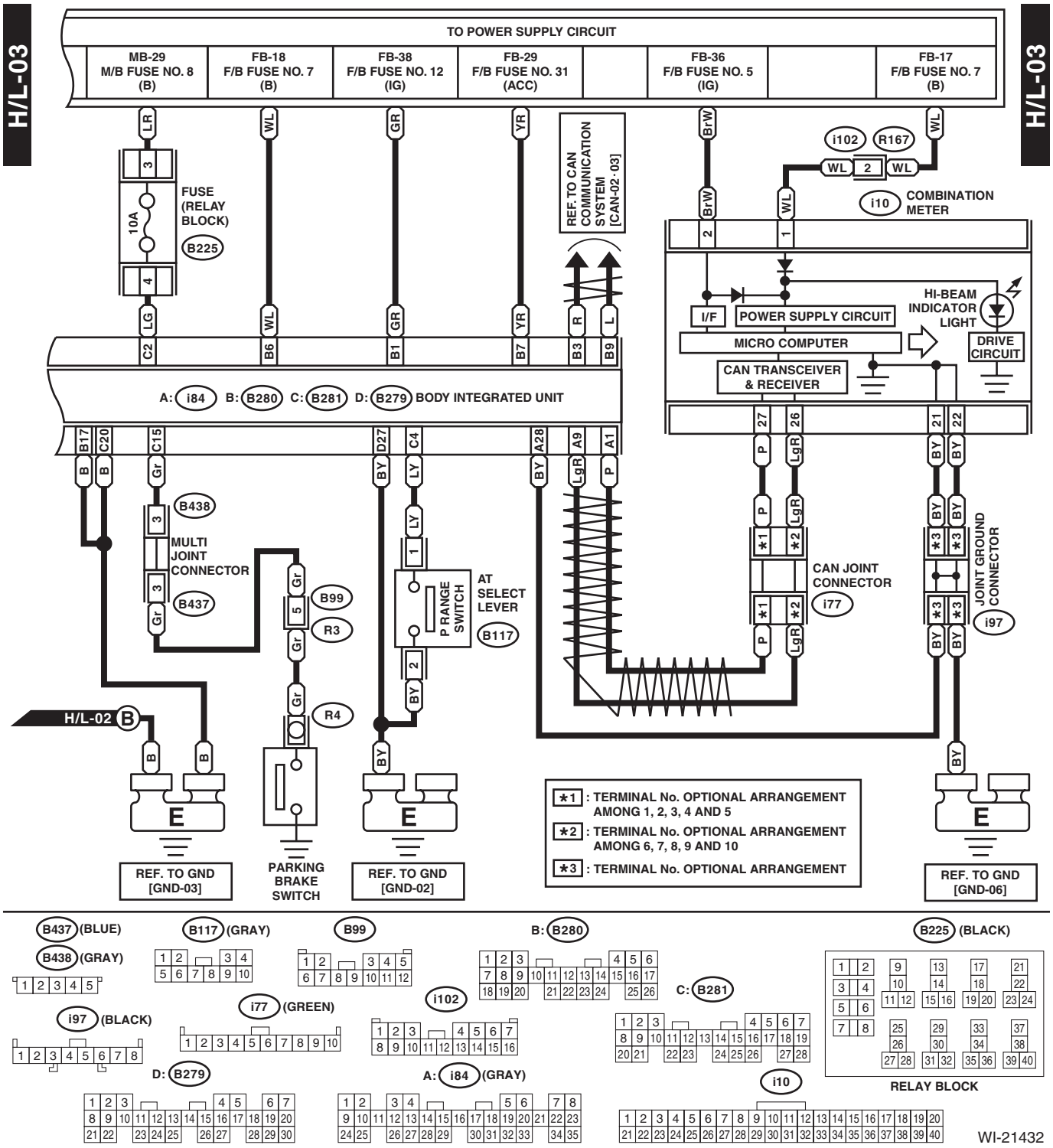

21.Front Fog Light System

A: WIRING DIAGRAM

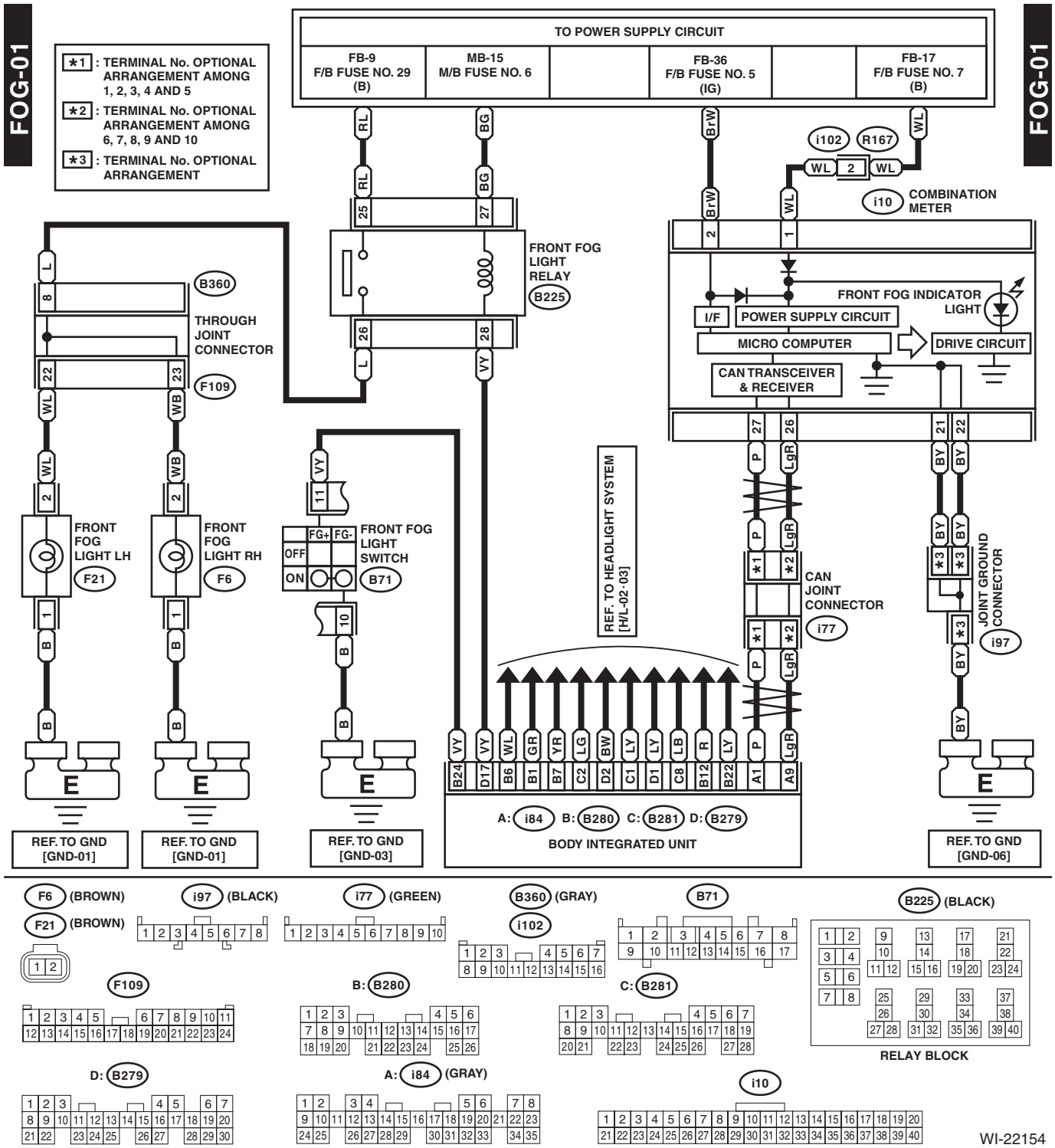

22. Back-up Light System

A: WIRING DIAGRAM

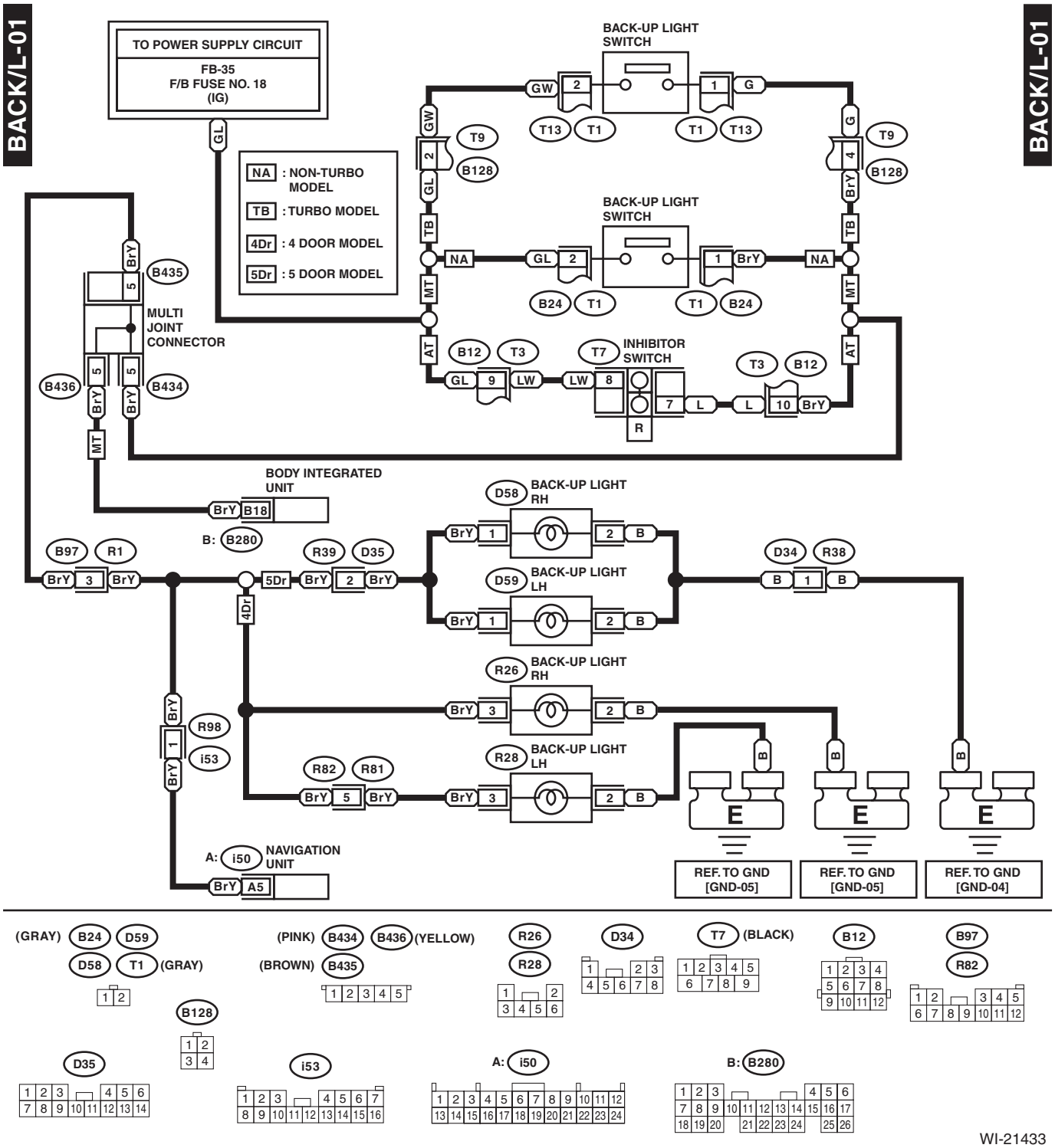

23.Stop Light System

A: WIRING DIAGRAM

1. 4 DOOR MODEL

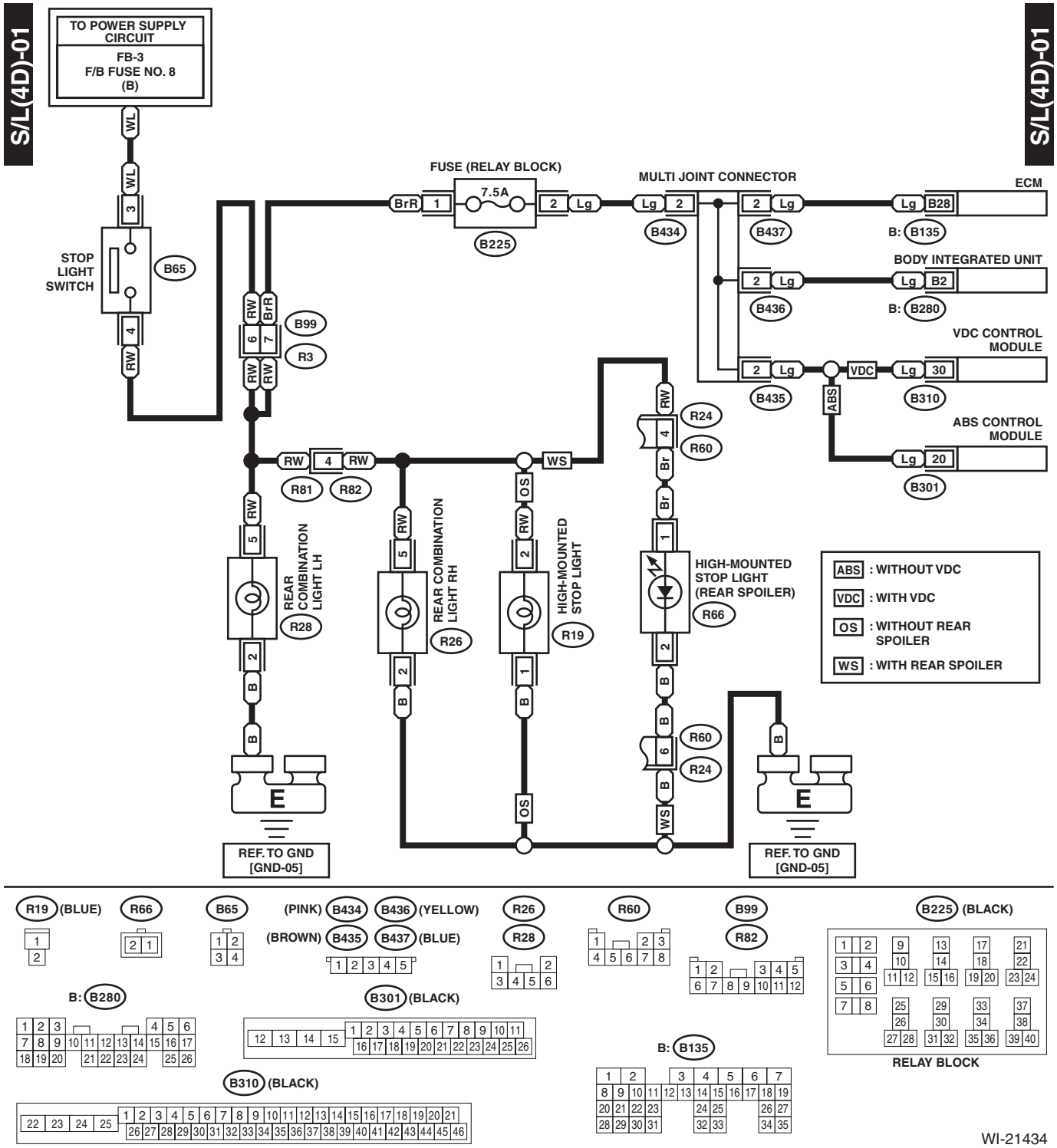

2. 5 DOOR MODEL

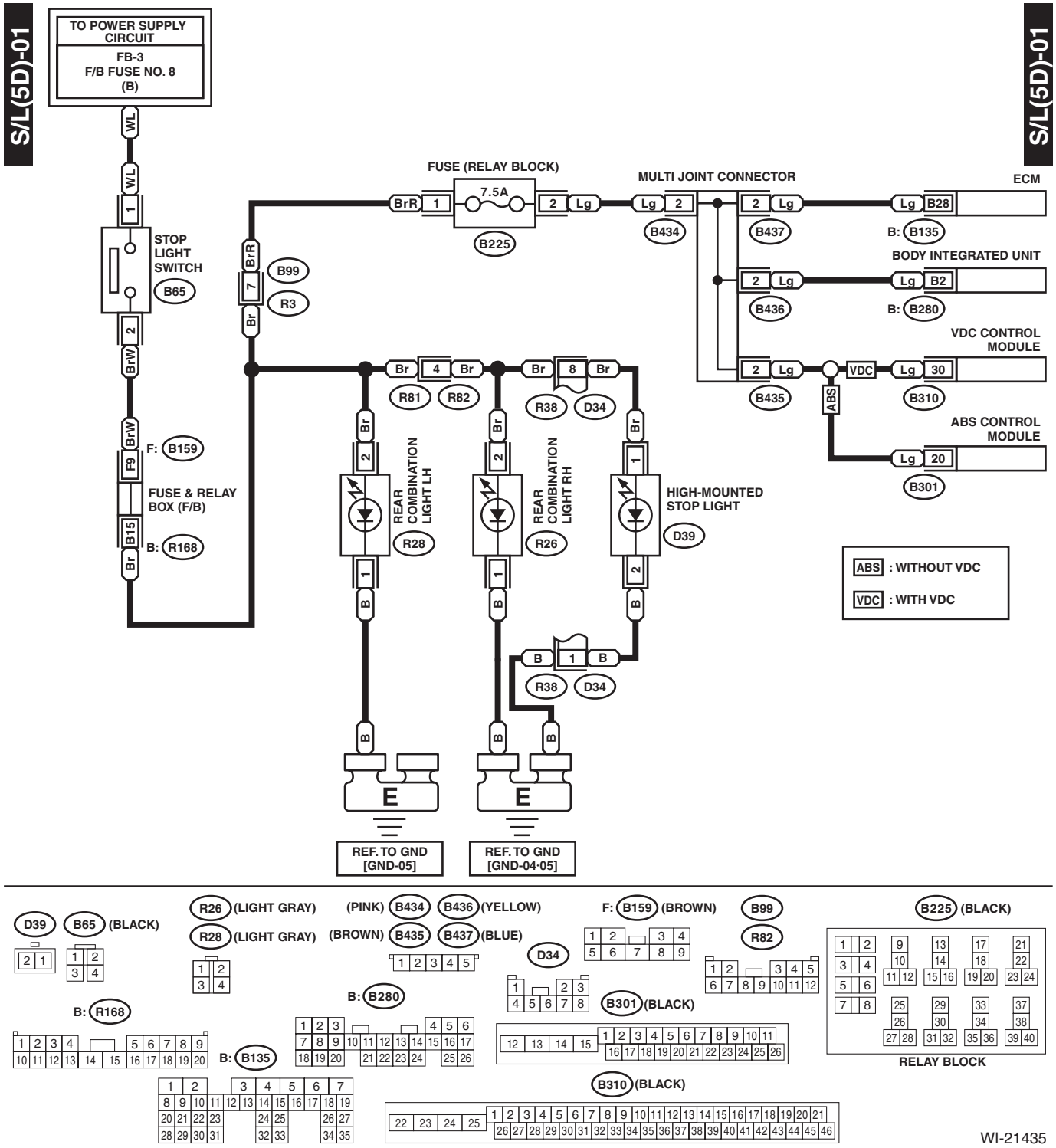

24.Clearance Light and Illumination Light System

A: WIRING DIAGRAM

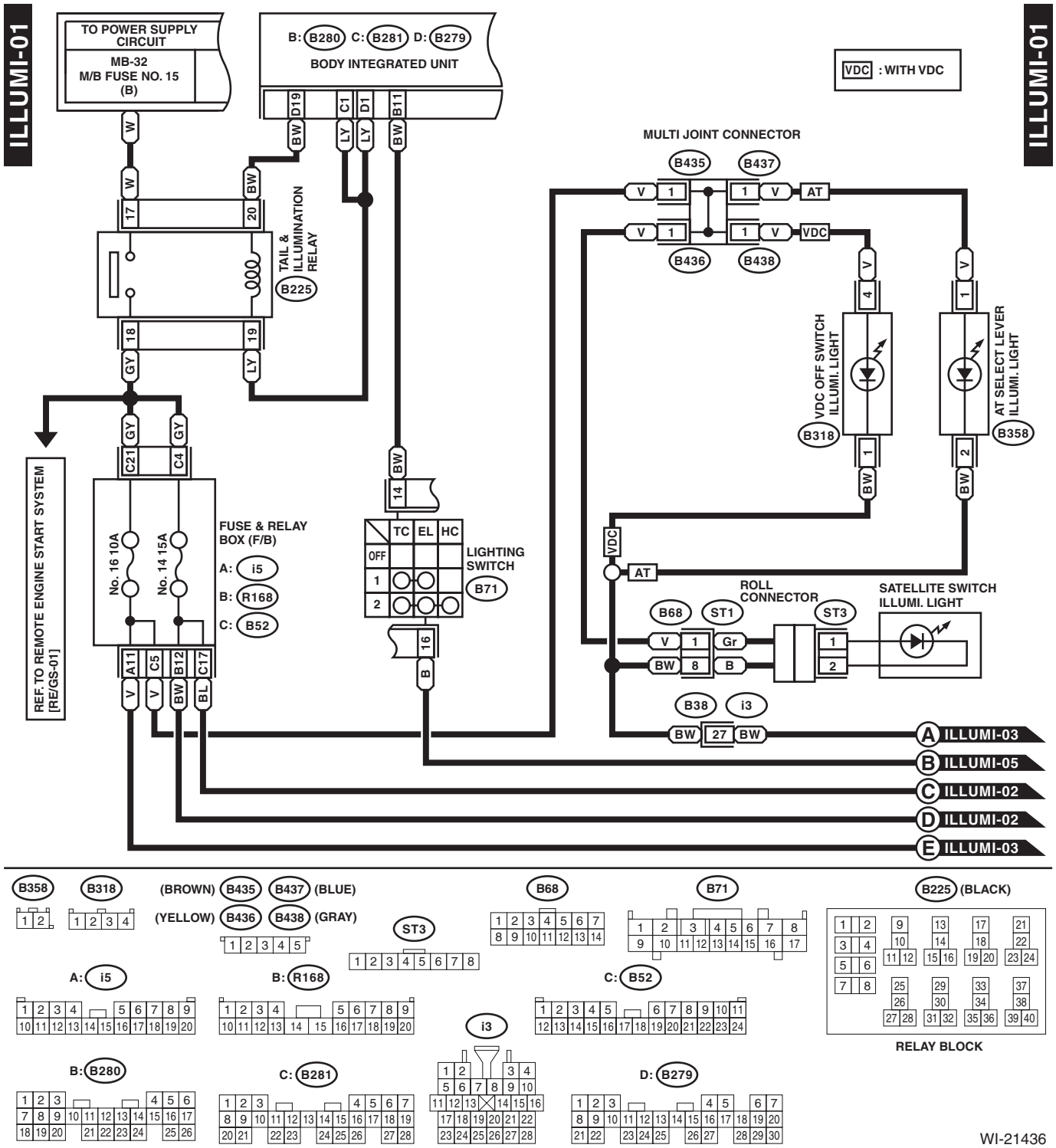

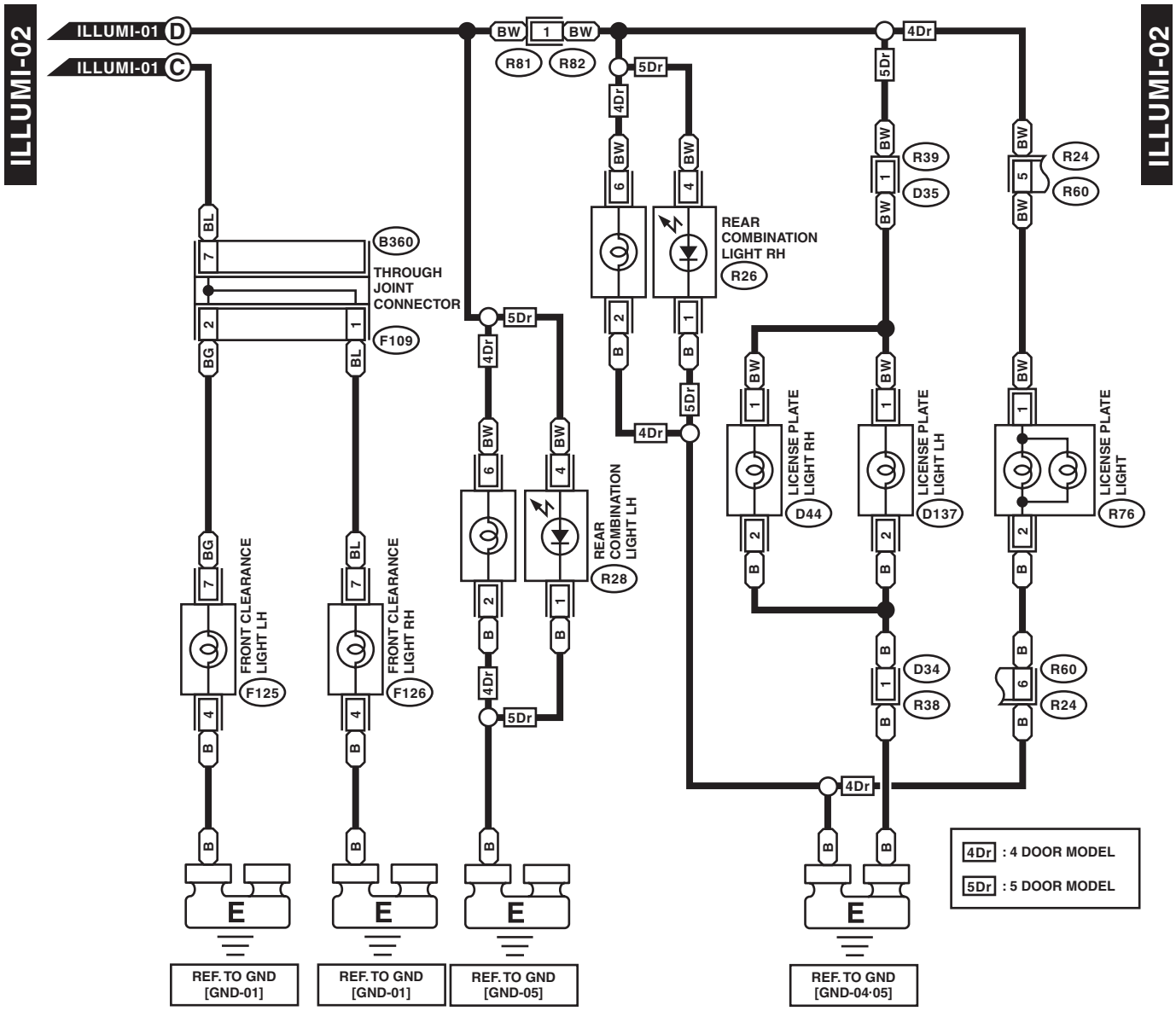
ILLUMI-02
ILLUMI-01 D
ILLUMI-01 C
BW
1
R81
R82
5Dr
4Dr
B360
THROUGH JOINT CONNECTOR
F109
BL
BG
FRONT CLEARANCE LIGHT LH
F125
FRONT CLEARANCE LIGHT RH
F126
REAR COMBINATION LIGHT LH
R28
REAR COMBINATION LIGHT RH
R26
LICENSE PLATE LIGHT RH
D44
LICENSE PLATE LIGHT LH
D137
LICENSE PLATE LIGHT
R76
R39
D35
R24
R60
D34
R38
B
E
REF. TO GND [GND-01]
REF. TO GND [GND-01]
REF. TO GND [GND-05]
REF. TO GND [GND-04·05]
4Dr : 4 DOOR MODEL
5Dr : 5 DOOR MODEL

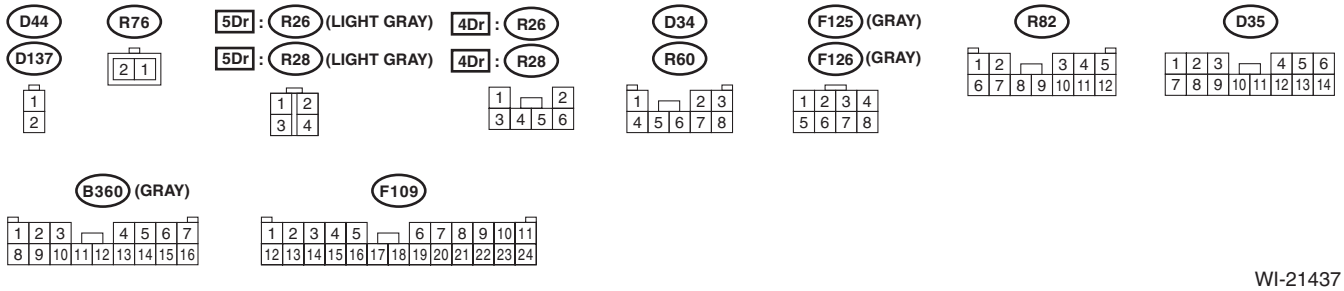
D44
D137
R76
5Dr : R26 (LIGHT GRAY)
5Dr : R28 (LIGHT GRAY)
4Dr : R26
4Dr : R28
D34
R60
F125 (GRAY)
F126 (GRAY)
R82
D35
B360 (GRAY)
F109

WI-21437

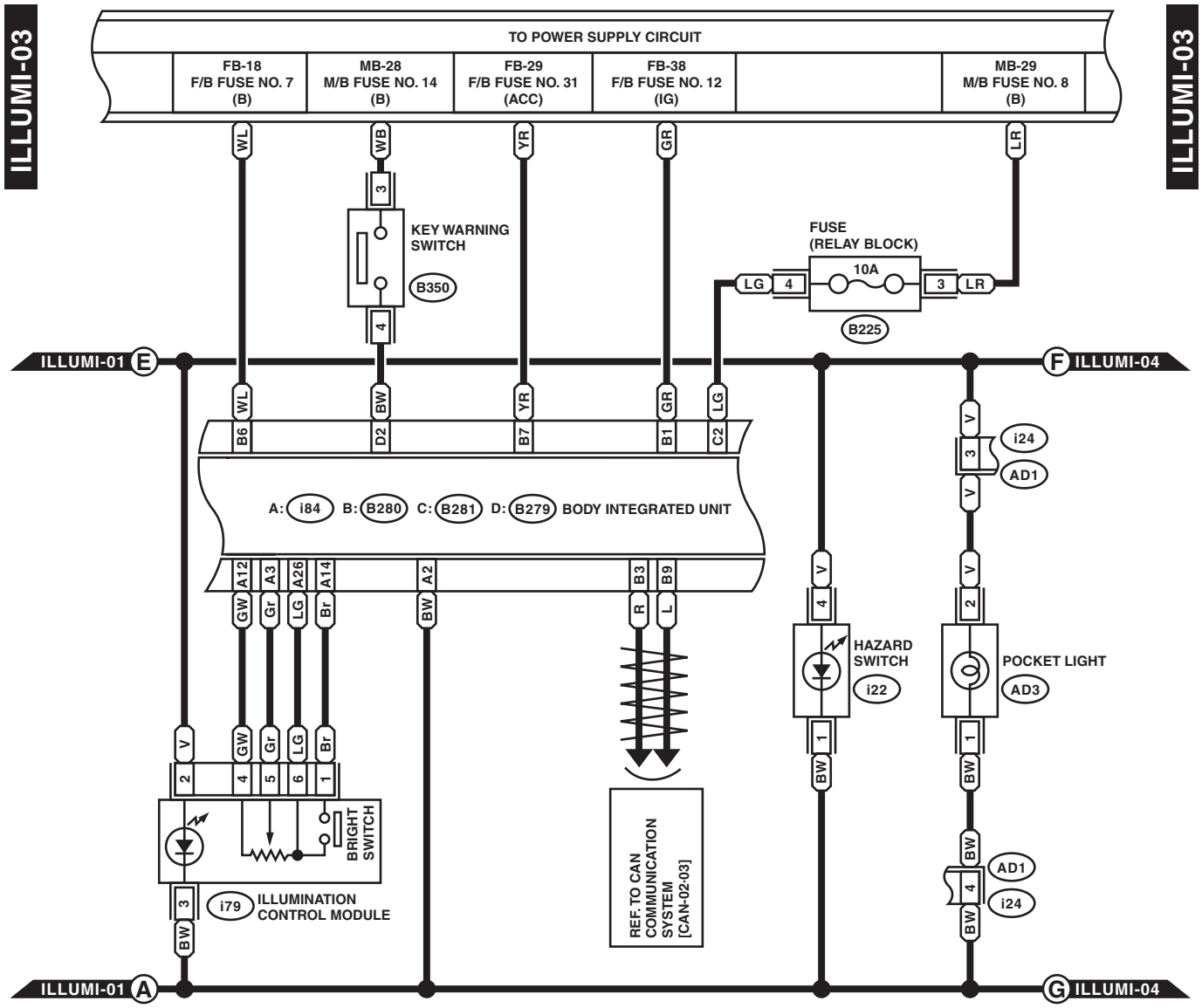
ILLUMI-03
TO POWER SUPPLY CIRCUIT
FB-18 F/B FUSE NO. 7 (B)
MB-28 M/B FUSE NO. 14 (B)
FB-29 F/B FUSE NO. 31 (ACC)
FB-38 F/B FUSE NO. 12 (IG)
MB-29 M/B FUSE NO. 8 (B)
KEY WARNING SWITCH
B350
FUSE (RELAY BLOCK)
10A
B225
ILLUMI-01 E
ILLUMI-04 F
A: i84 B: B280 C: B281 D: B279 BODY INTEGRATED UNIT
HAZARD SWITCH
i22
POCKET LIGHT
AD3
i24
AD1
BRIGHT SWITCH
i79
ILLUMINATION CONTROL MODULE
REF. TO CAN COMMUNICATION SYSTEM [CAN-02-03]
ILLUMI-01 A
ILLUMI-04 G

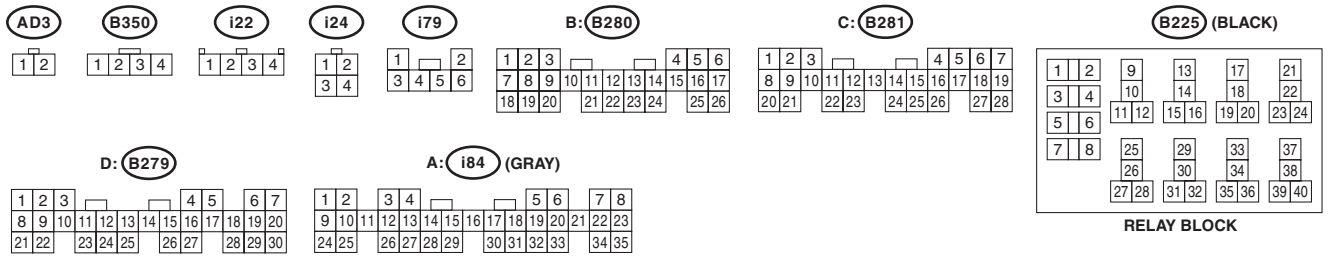
AD3
B350
i22
i24
i79
B: B280
C: B281
B225 (BLACK)
D: B279
A: i84 (GRAY)
RELAY BLOCK

WI-21438

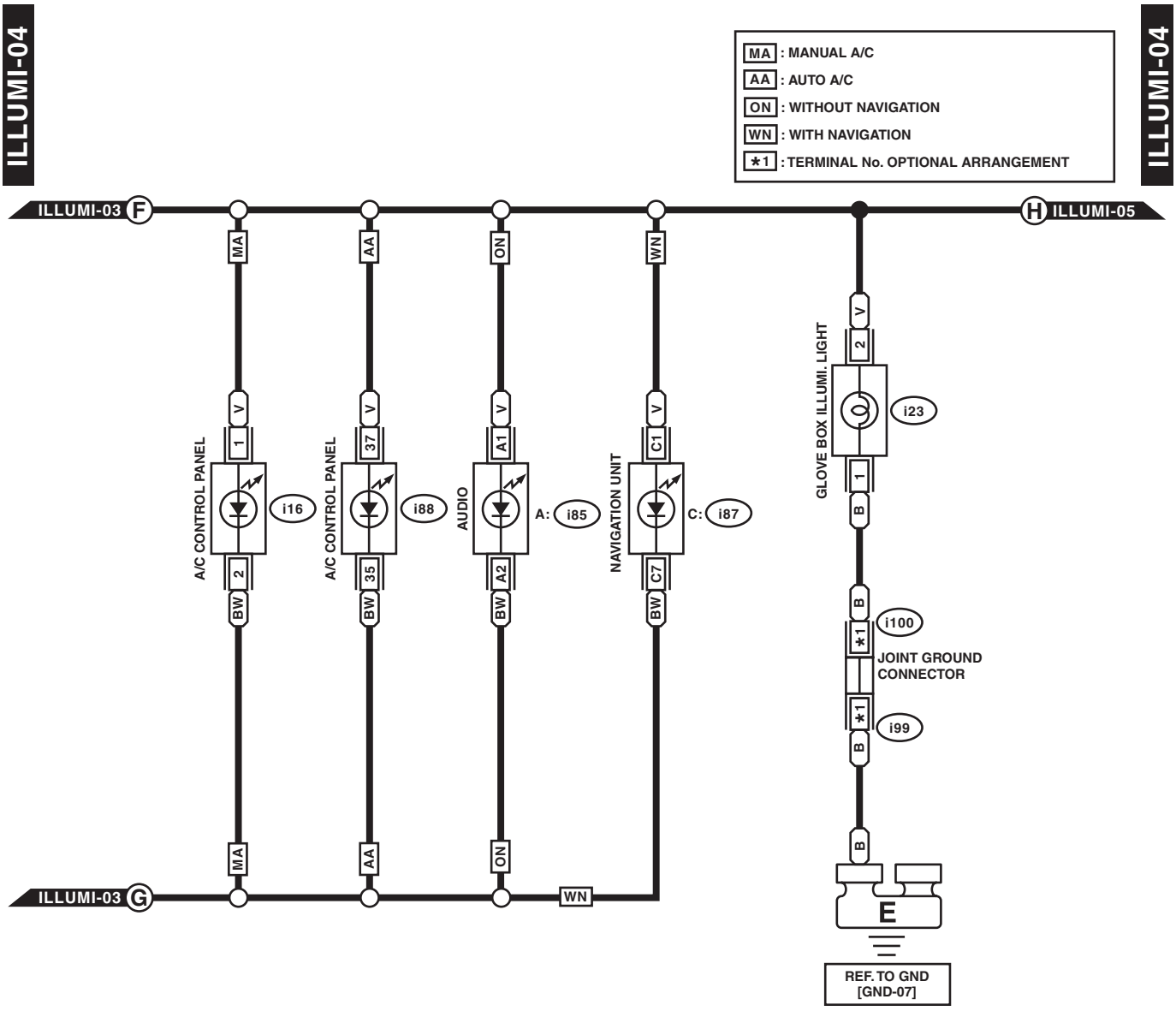
ILLUMI-04
MA : MANUAL A/C
AA : AUTO A/C
ON : WITHOUT NAVIGATION
WN : WITH NAVIGATION
*1 : TERMINAL No. OPTIONAL ARRANGEMENT
ILLUMI-03 F
ILLUMI-05 H
ILLUMI-03 G
A/C CONTROL PANEL
i16
A/C CONTROL PANEL
i88
AUDIO
A: i85
NAVIGATION UNIT
C: i87
GLOVE BOX ILLUMI. LIGHT
i23
i100
JOINT GROUND CONNECTOR
i99
E
REF. TO GND [GND-07]

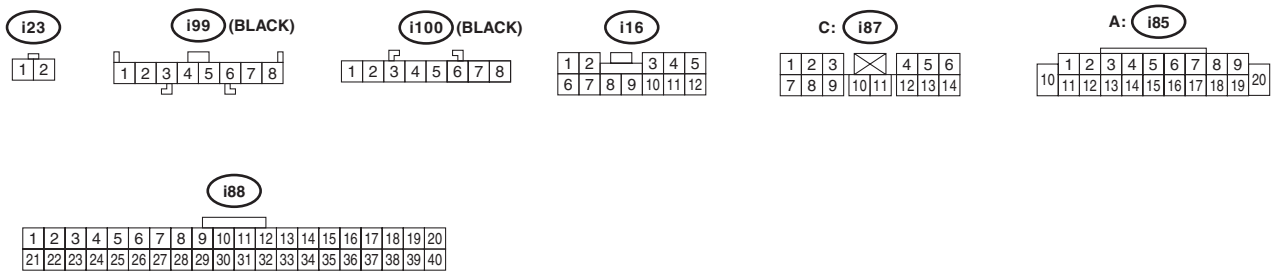
i23
i99 (BLACK)
i100 (BLACK)
i16
C: i87
A: i85
i88

WI-21439

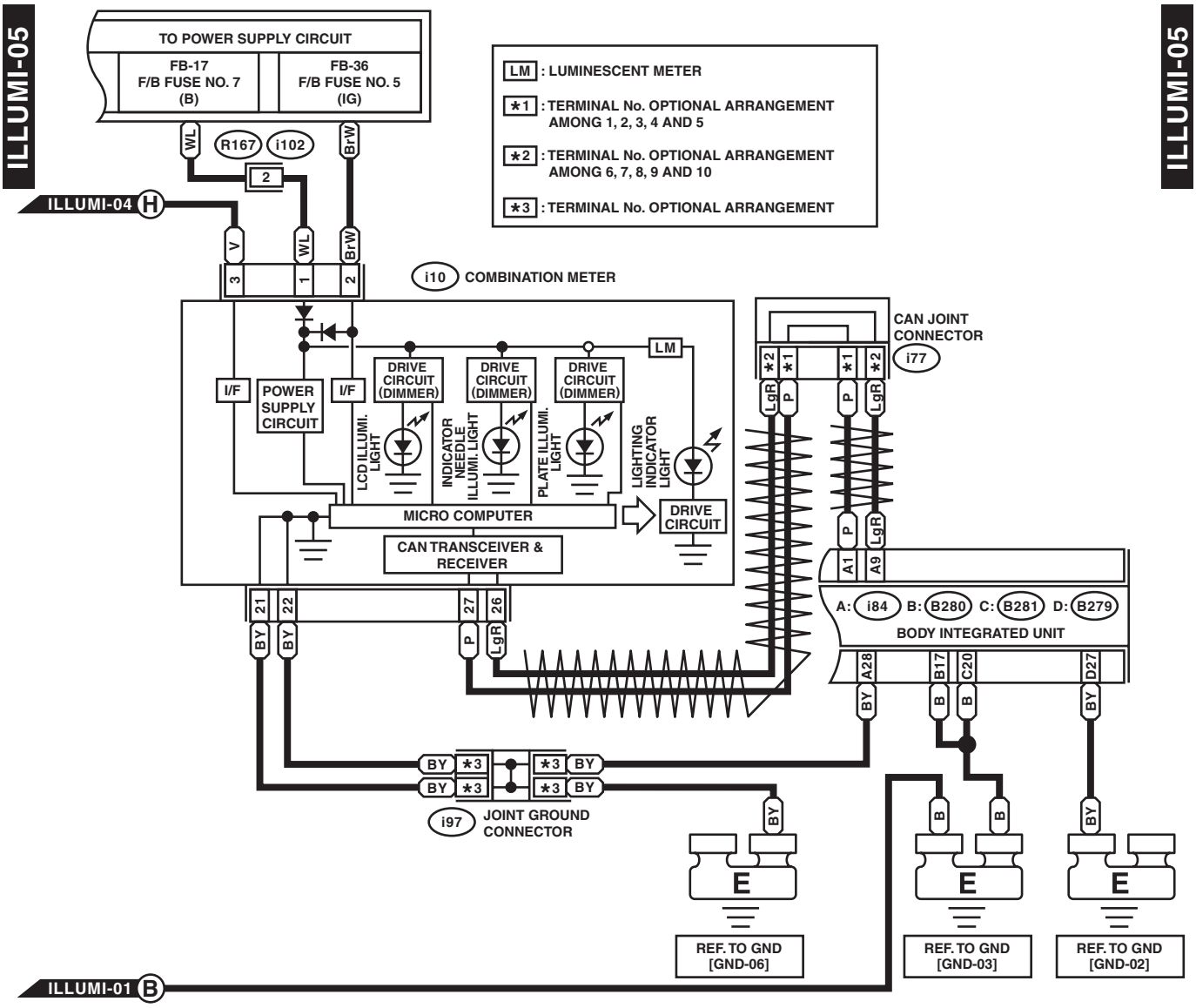
ILLUMI-05
TO POWER SUPPLY CIRCUIT
FB-17 F/B FUSE NO. 7 (B)
FB-36 F/B FUSE NO. 5 (IG)
LM : LUMINESCENT METER
*1 : TERMINAL No. OPTIONAL ARRANGEMENT AMONG 1, 2, 3, 4 AND 5
*2 : TERMINAL No. OPTIONAL ARRANGEMENT AMONG 6, 7, 8, 9 AND 10
*3 : TERMINAL No. OPTIONAL ARRANGEMENT
ILLUMI-04 H
i10 COMBINATION METER
CAN JOINT CONNECTOR
i77
I/F
POWER SUPPLY CIRCUIT
DRIVE CIRCUIT (DIMMER)
LCD ILLUMI. LIGHT
INDICATOR NEEDLE ILLUMI. LIGHT
PLATE ILLUMI. LIGHT
LIGHTING INDICATOR LIGHT
MICRO COMPUTER
CAN TRANSCEIVER & RECEIVER
DRIVE CIRCUIT
A: i84 B: B280 C: B281 D: B279
BODY INTEGRATED UNIT
i97 JOINT GROUND CONNECTOR
REF. TO GND [GND-06]
REF. TO GND [GND-03]
REF. TO GND [GND-02]
ILLUMI-01 B
i97 (BLACK)
i77 (GREEN)
i102
B: B280
C: B281
D: B279
A: i84 (GRAY)
i10
WI-21440

25. Turn Signal Light and Hazard Light System

A: WIRING DIAGRAM

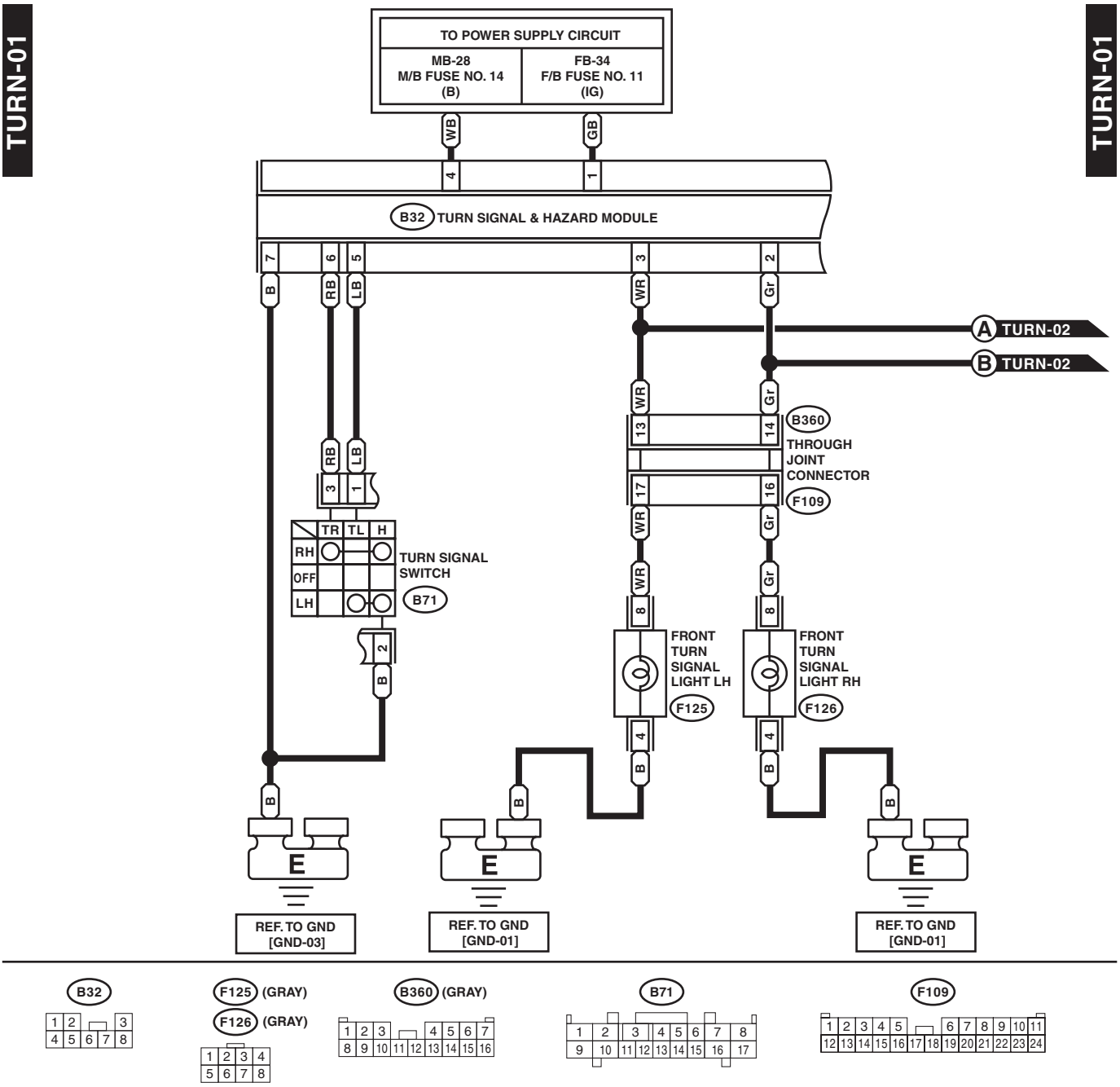

WI-21441

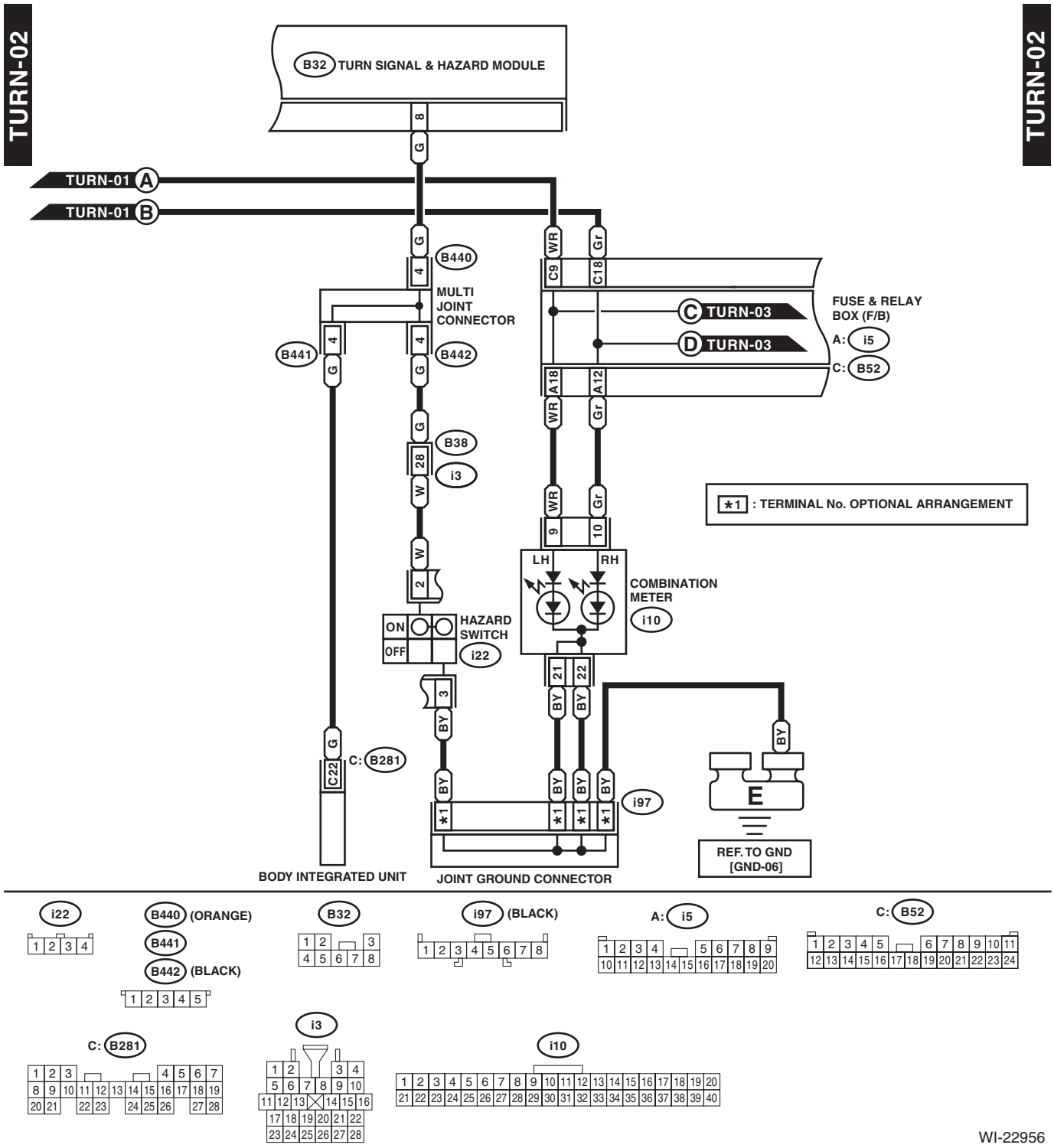
TURN-02
B32 TURN SIGNAL & HAZARD MODULE
TURN-01 A
TURN-01 B
B440
MULTI JOINT CONNECTOR
B441
B442
B38
i3
C TURN-03
D TURN-03
FUSE & RELAY BOX (F/B)
A: i5
C: B52
*1 : TERMINAL No. OPTIONAL ARRANGEMENT
LH
RH
COMBINATION METER
i10
HAZARD SWITCH
ON
OFF
i22
C: B281
i97
E
REF. TO GND [GND-06]
BODY INTEGRATED UNIT
JOINT GROUND CONNECTOR
B440 (ORANGE)
B441
B442 (BLACK)
B32
i97 (BLACK)
A: i5
C: B52
C: B281
i3
i10
WI-22956

TURN-03

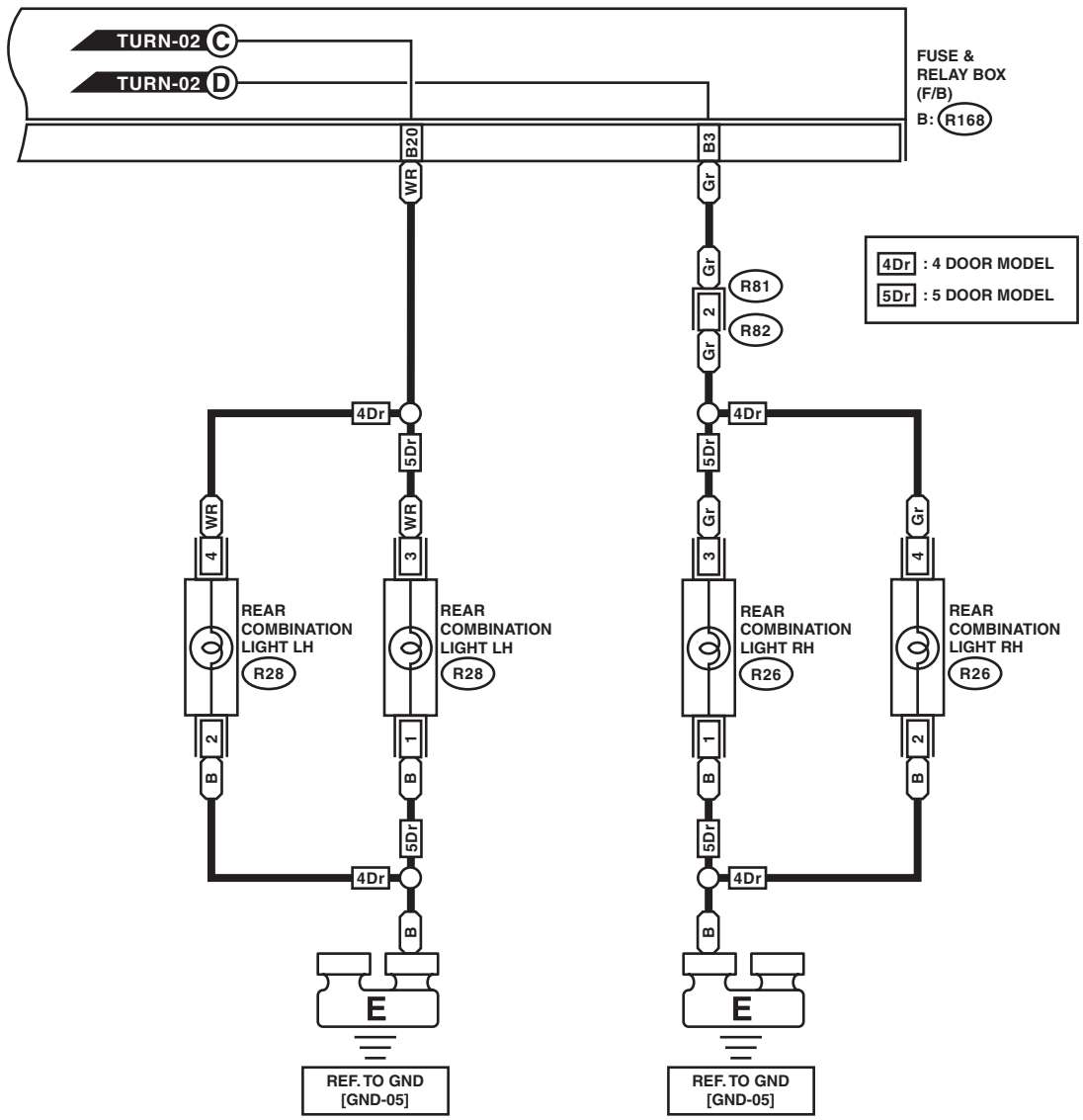

5Dr : R26 (LIGHT GRAY)

5Dr : R28 (LIGHT GRAY)

4Dr : R26

4Dr : R28

R82

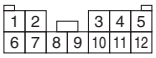

B: R168

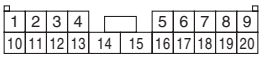

WI-22957

26.Interior Light System

A: WIRING DIAGRAM

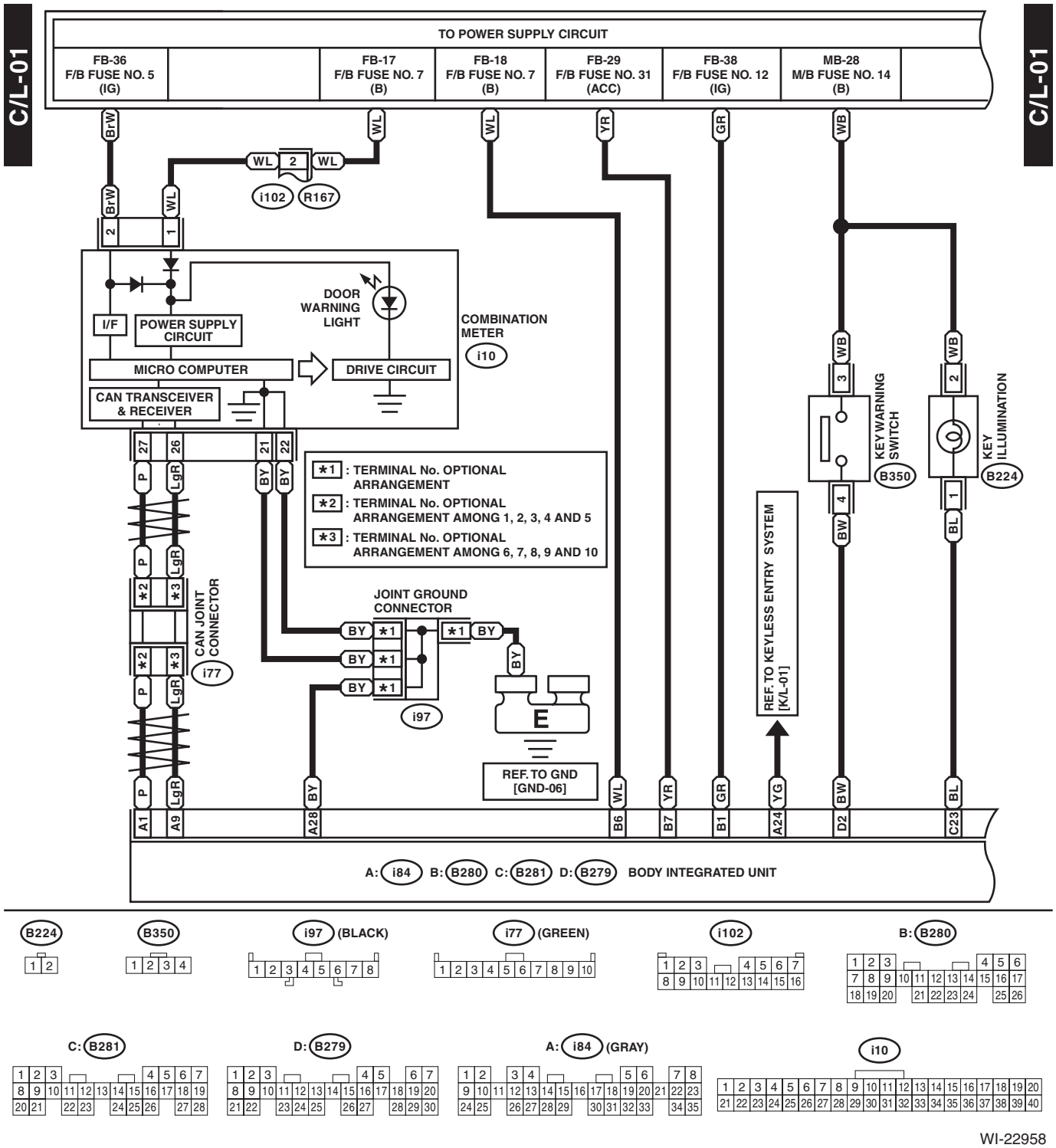

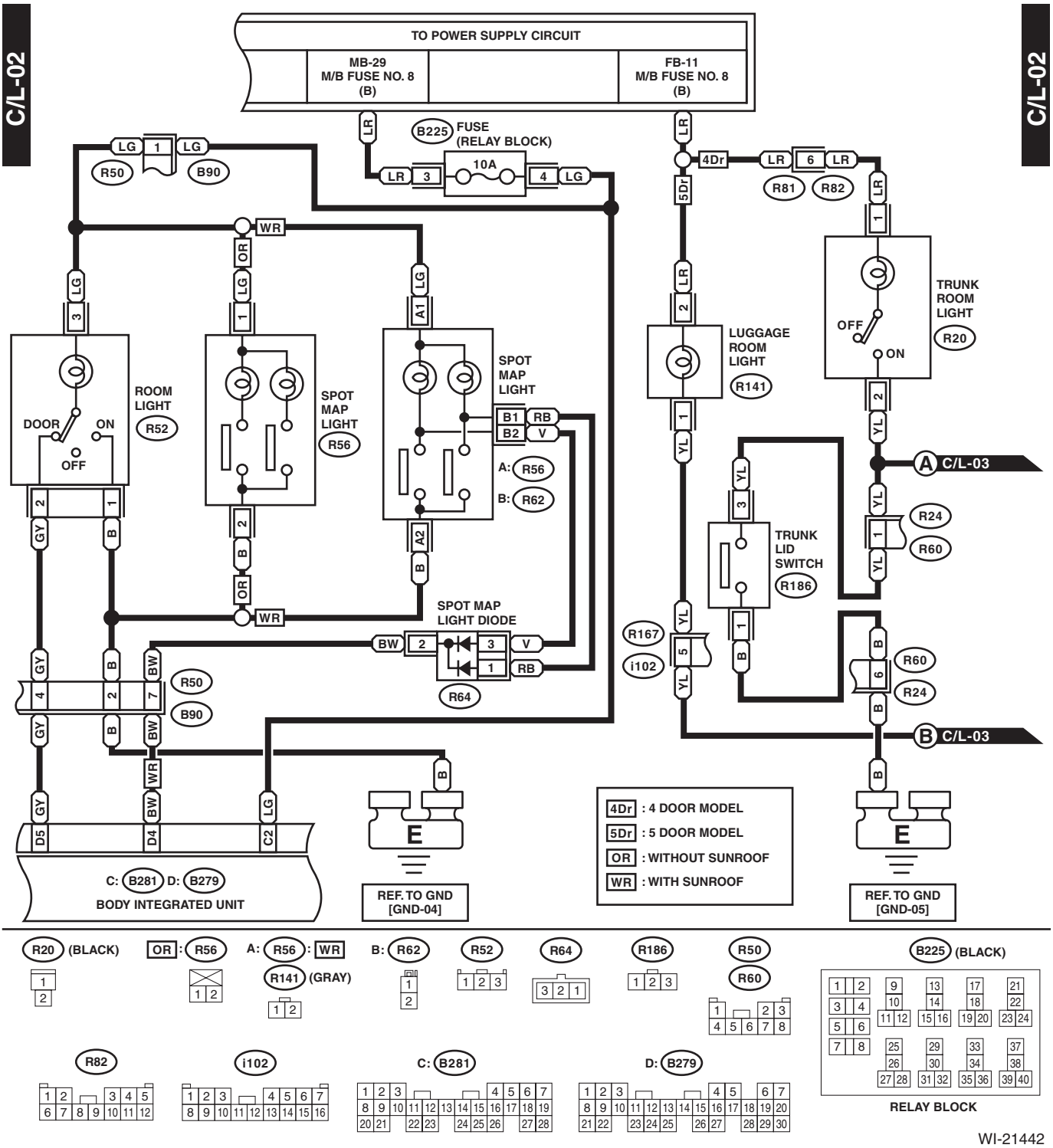
C/L-02
TO POWER SUPPLY CIRCUIT
MB-29
M/B FUSE NO. 8
(B)
FB-11
M/B FUSE NO. 8
(B)
B225
FUSE
(RELAY BLOCK)
10A
R50
B90
ROOM
LIGHT
R52
DOOR
ON
OFF
SPOT
MAP
LIGHT
R56
SPOT
MAP
LIGHT
A: R56
B: R62
SPOT MAP
LIGHT DIODE
R64
4Dr
5Dr
R81
R82
TRUNK
ROOM
LIGHT
R20
LUGGAGE
ROOM
LIGHT
R141
TRUNK
LID
SWITCH
R186
R167
i102
A C/L-03
B C/L-03
R24
R60
C: B281 D: B279
BODY INTEGRATED UNIT
REF. TO GND
[GND-04]
REF. TO GND
[GND-05]
4Dr : 4 DOOR MODEL
5Dr : 5 DOOR MODEL
OR : WITHOUT SUNROOF
WR : WITH SUNROOF
R20 (BLACK)
OR : R56
A: R56 : WR
R141 (GRAY)
B: R62
R52
R64
R186
R50
R60
B225 (BLACK)
R82
i102
C: B281
D: B279
RELAY BLOCK
WI-21442

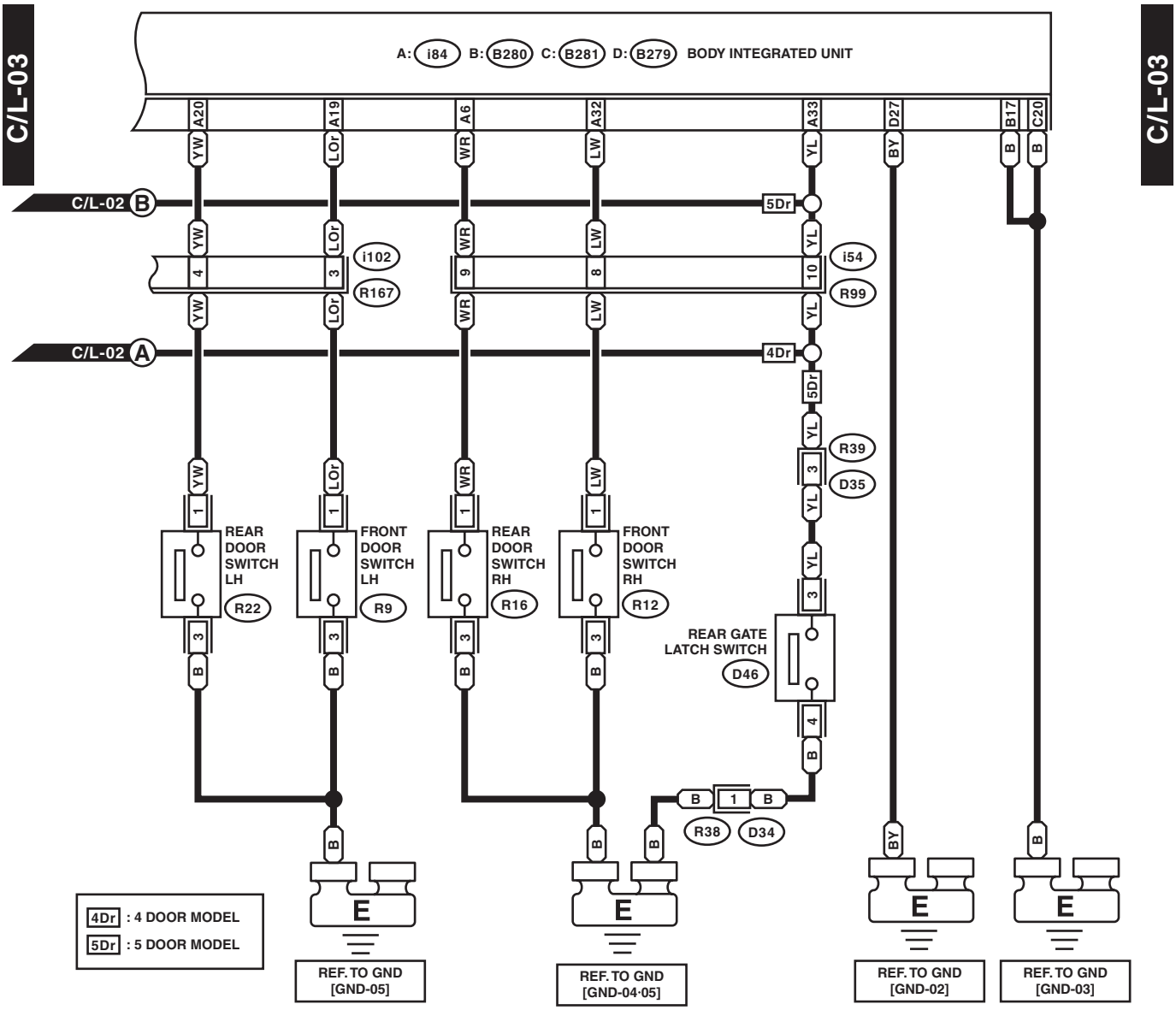
C/L-03
A: i84 B: B280 C: B281 D: B279 BODY INTEGRATED UNIT
A20
A19
A6
A32
A33
D27
B17
C20
YW
LOr
WR
LW
YL
BY
B
C/L-02 B
5Dr
i102
R167
i54
R99
C/L-02 A
4Dr
R39
D35
REAR DOOR SWITCH LH
R22
FRONT DOOR SWITCH LH
R9
REAR DOOR SWITCH RH
R16
FRONT DOOR SWITCH RH
R12
REAR GATE LATCH SWITCH
D46
R38
D34
4Dr : 4 DOOR MODEL
5Dr : 5 DOOR MODEL
REF. TO GND [GND-05]
REF. TO GND [GND-04·05]
REF. TO GND [GND-02]
REF. TO GND [GND-03]

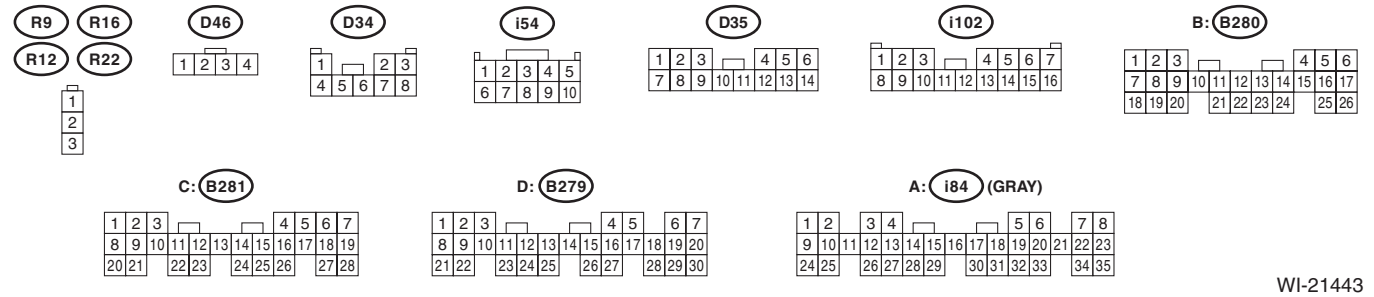
R9
R16
R12
R22
D46
D34
i54
D35
i102
B: B280
C: B281
D: B279
A: i84 (GRAY)

WI-21443

27.Front Wiper and Washer System

A: WIRING DIAGRAM

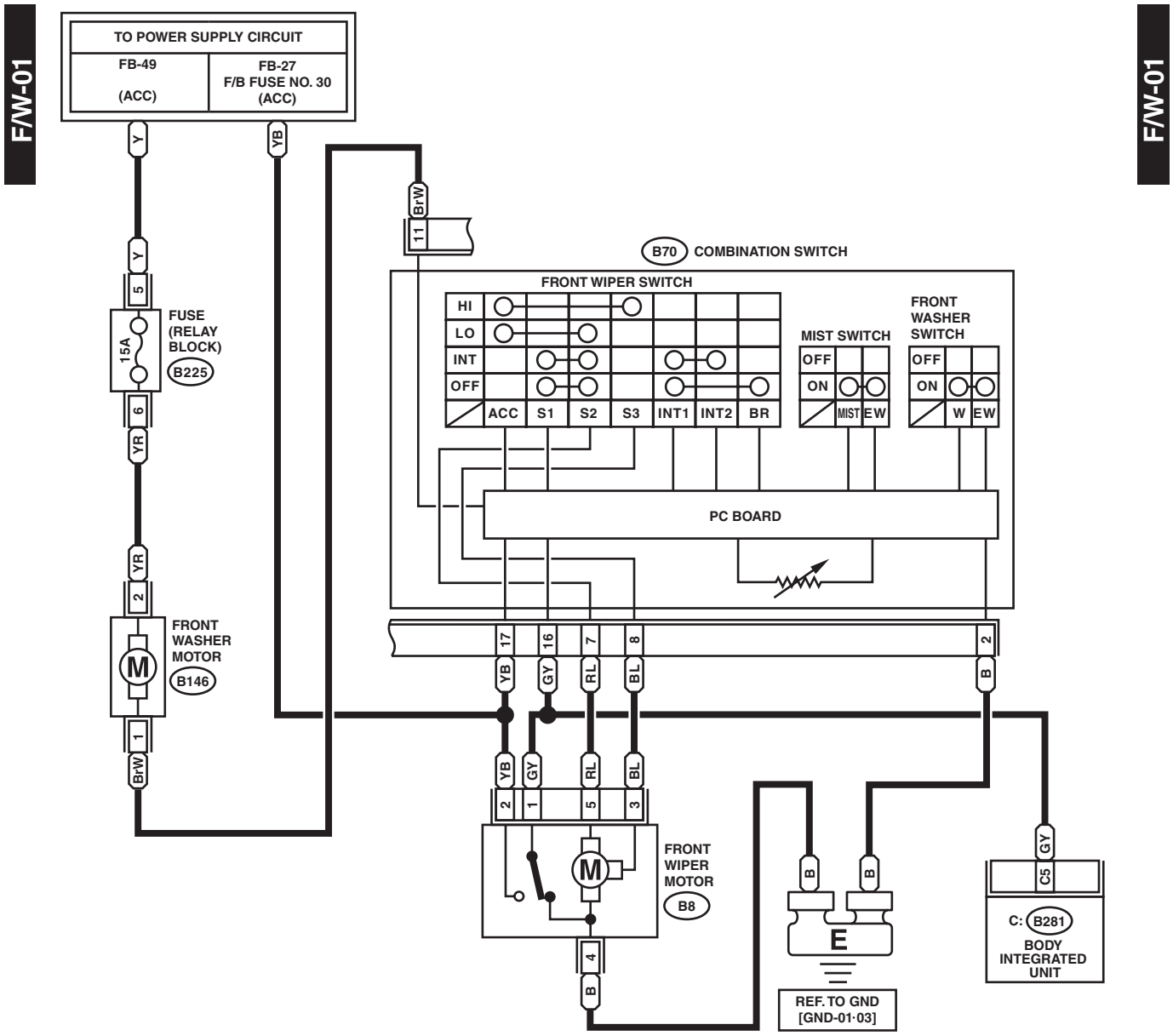

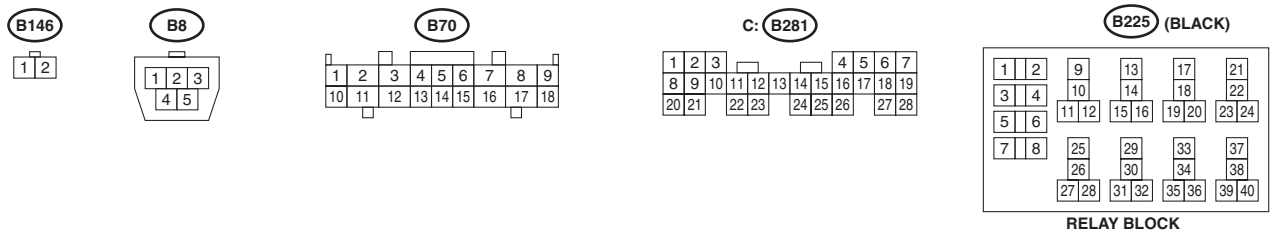

WI-21444

28.Rear Wiper and Washer System

A: WIRING DIAGRAM

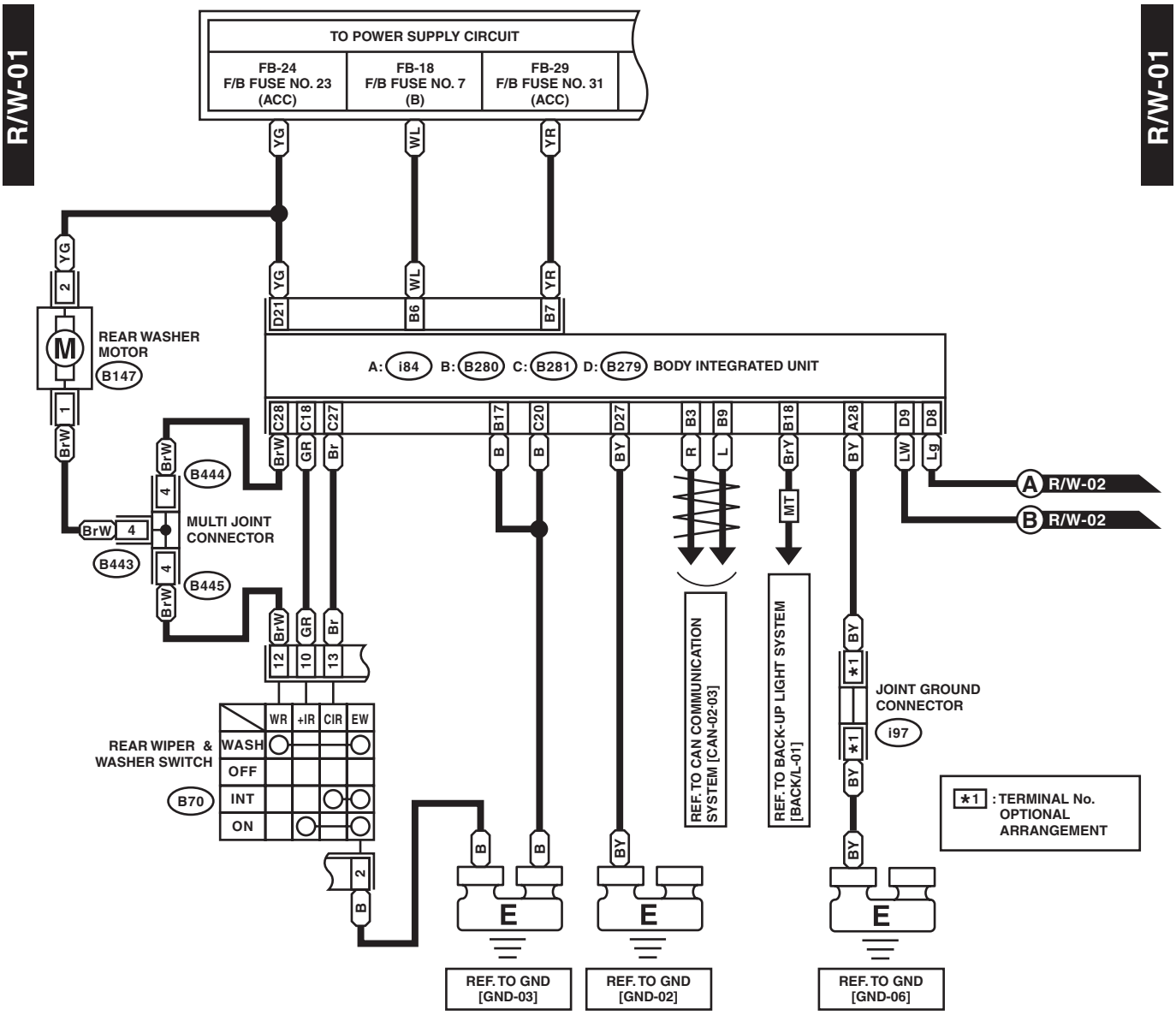

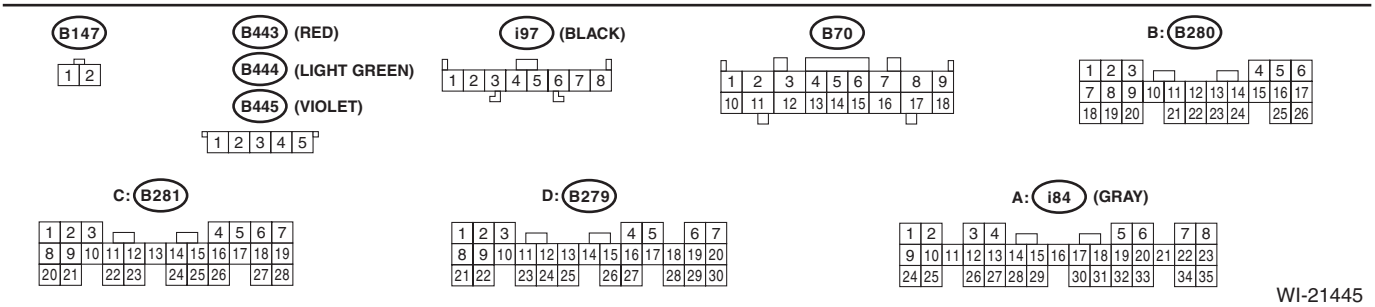

R/W-02

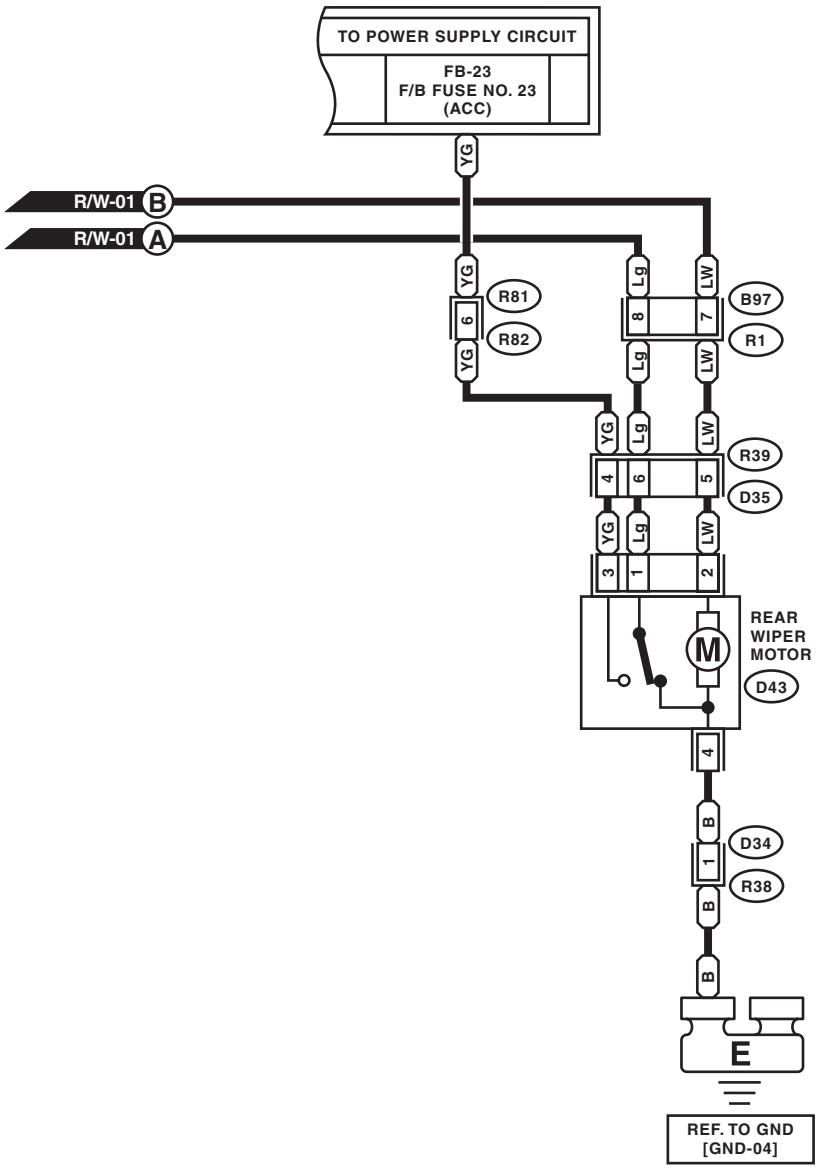

R/W-02

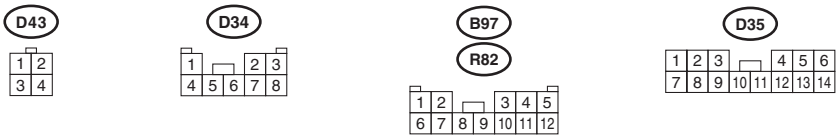

WI-16953

29. Wiper Deicer System

A: WIRING DIAGRAM

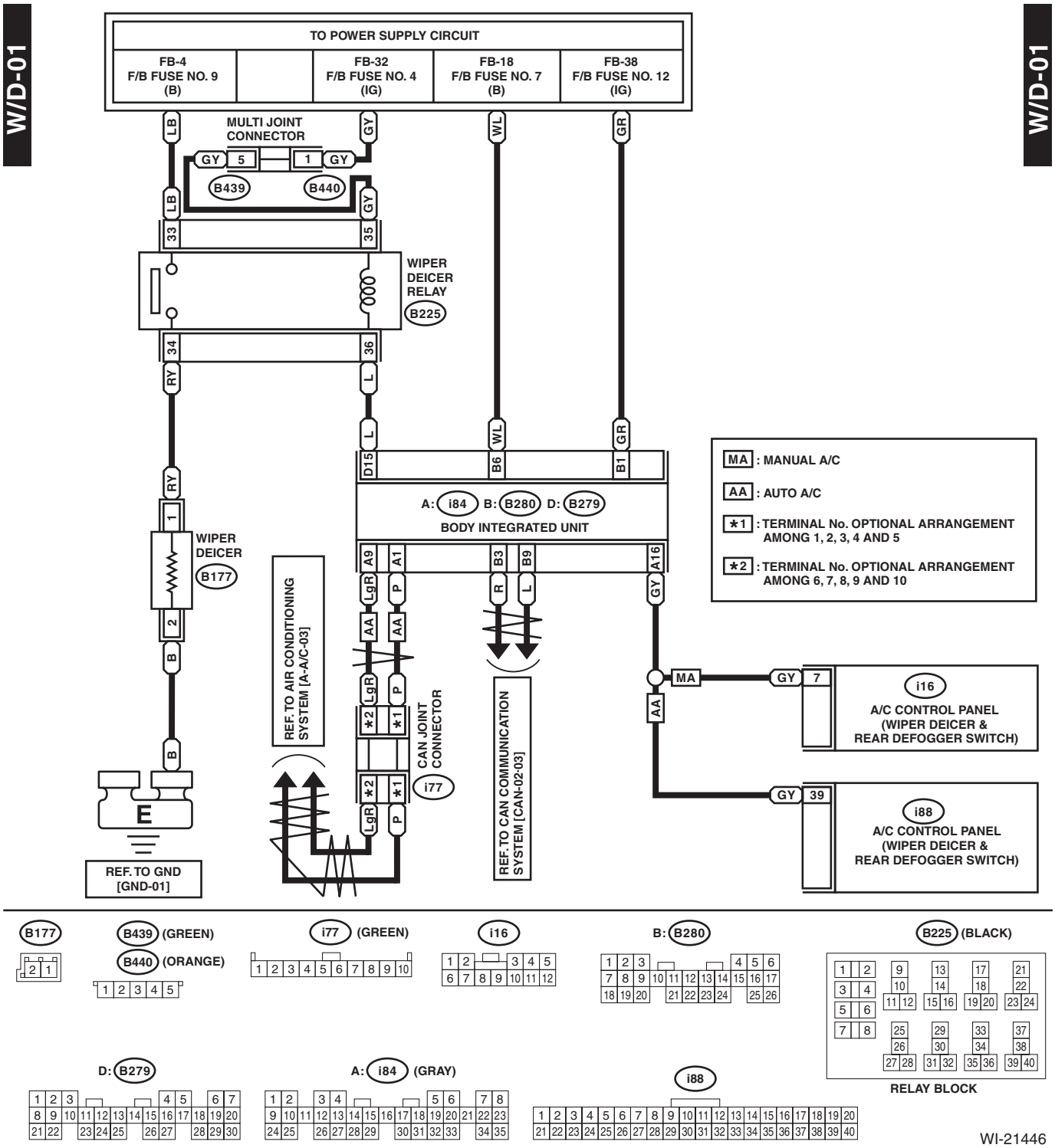

30. Audio System

A: WIRING DIAGRAM

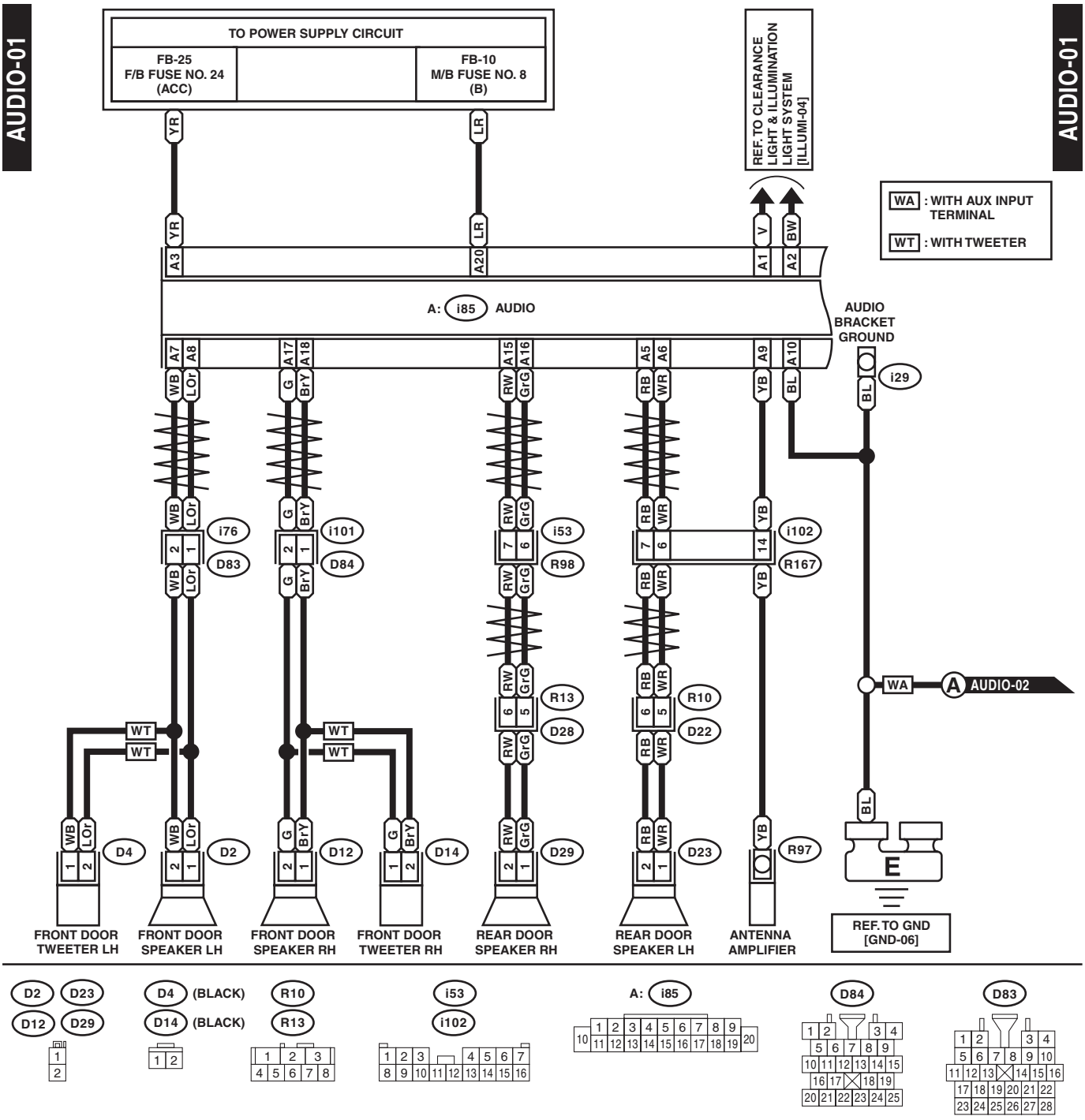

WI-21447

AUDIO-02

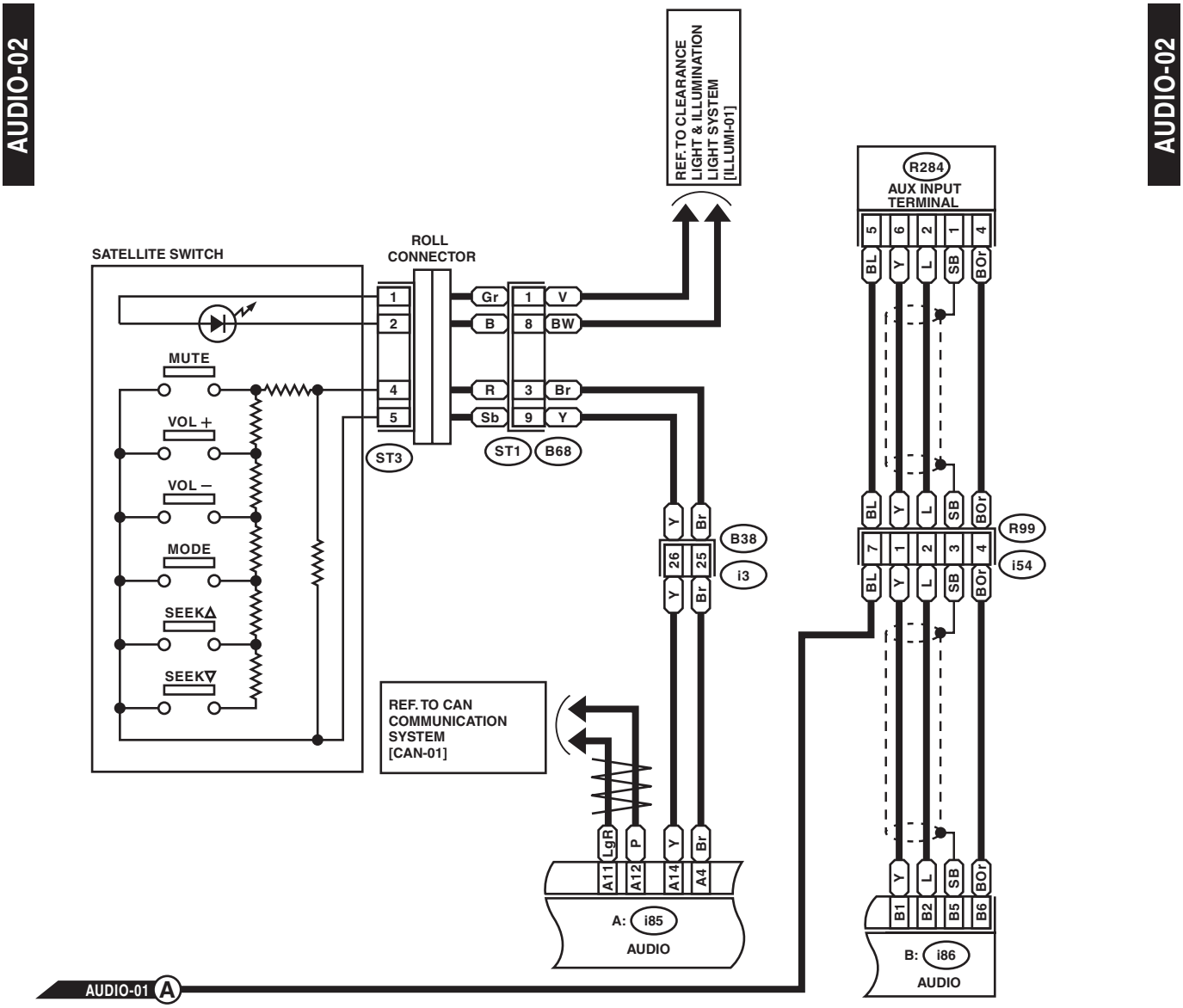

AUDIO-02

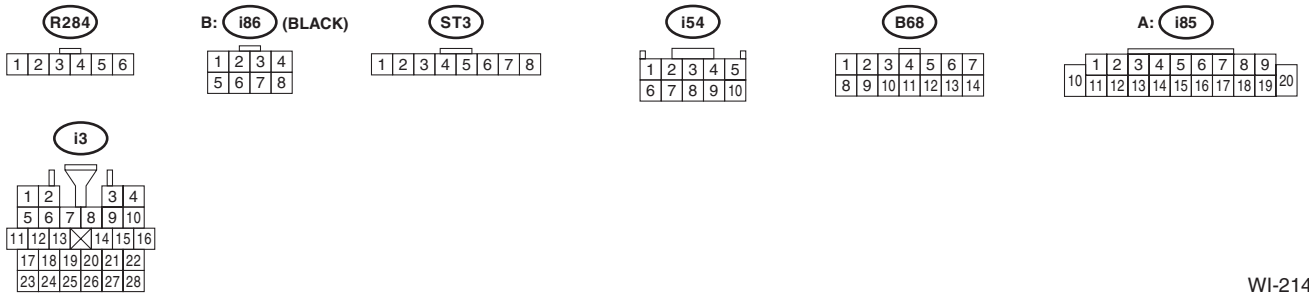

WI-21448

31.Front Accessory Power Supply Socket System

A: WIRING DIAGRAM

FAPS-01

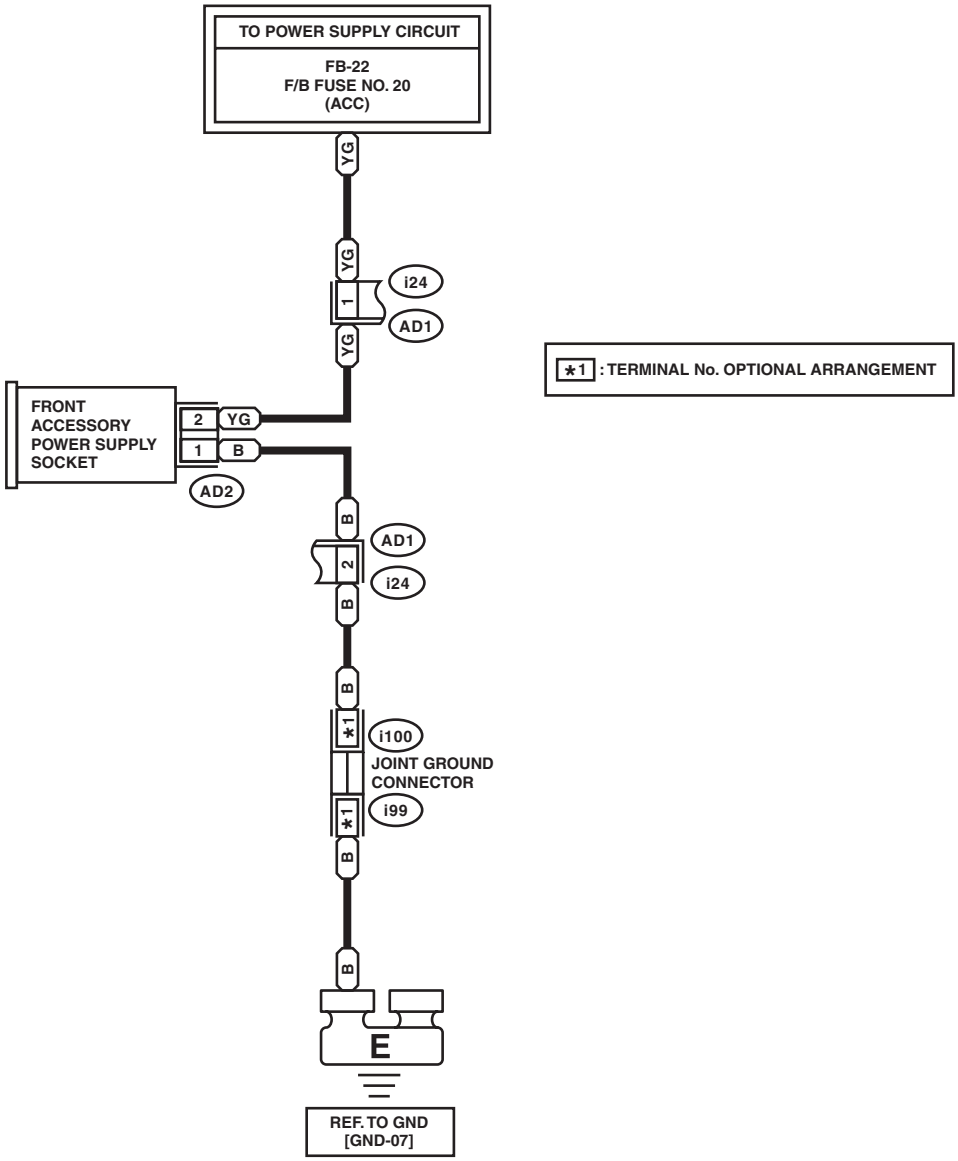

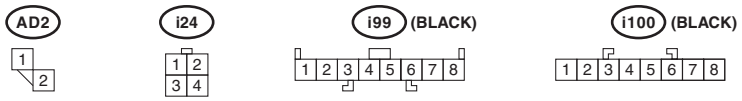

WI-22959

32.Rear Accessory Power Supply Socket System

A: WIRING DIAGRAM

RAPS-01

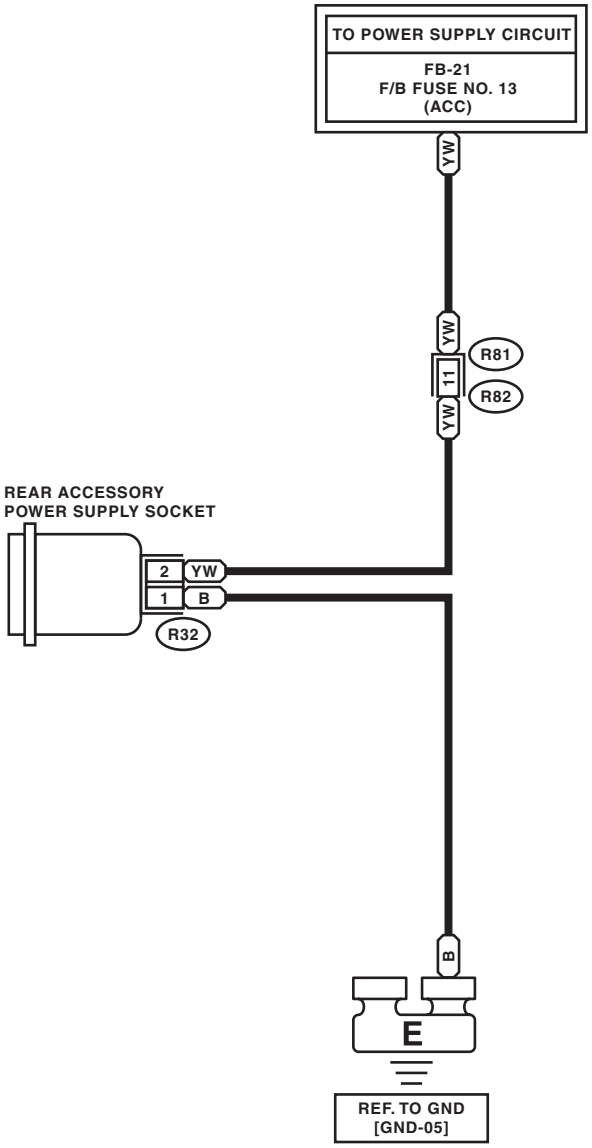

RAPS-01

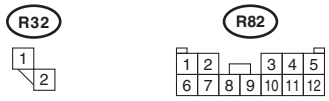

WI-16959

33.Navigation System

A: WIRING DIAGRAM

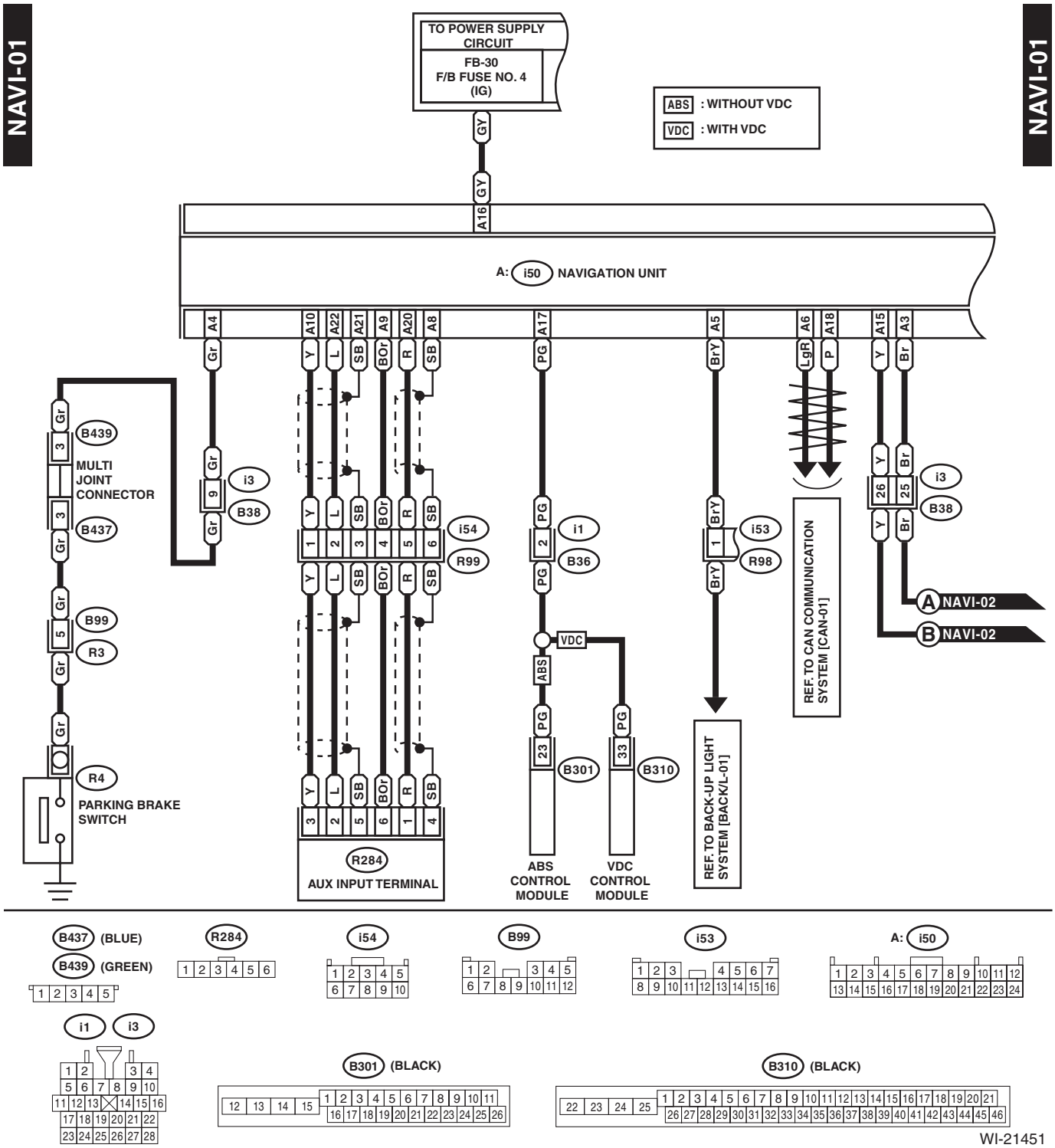

NAVI-02

NAVI-02

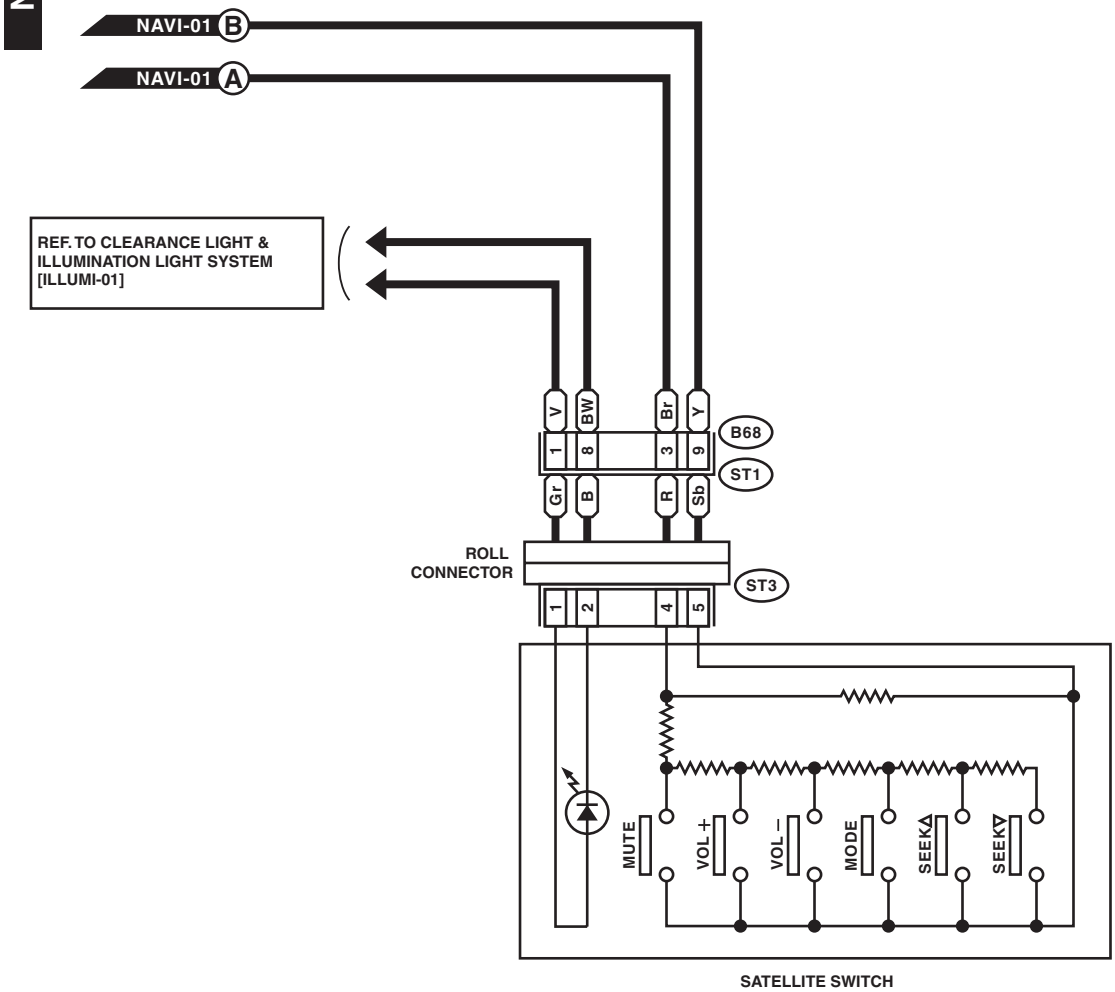

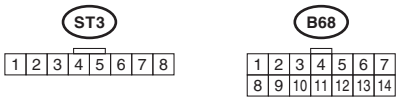

WI-21450

WIRING SYSTEM

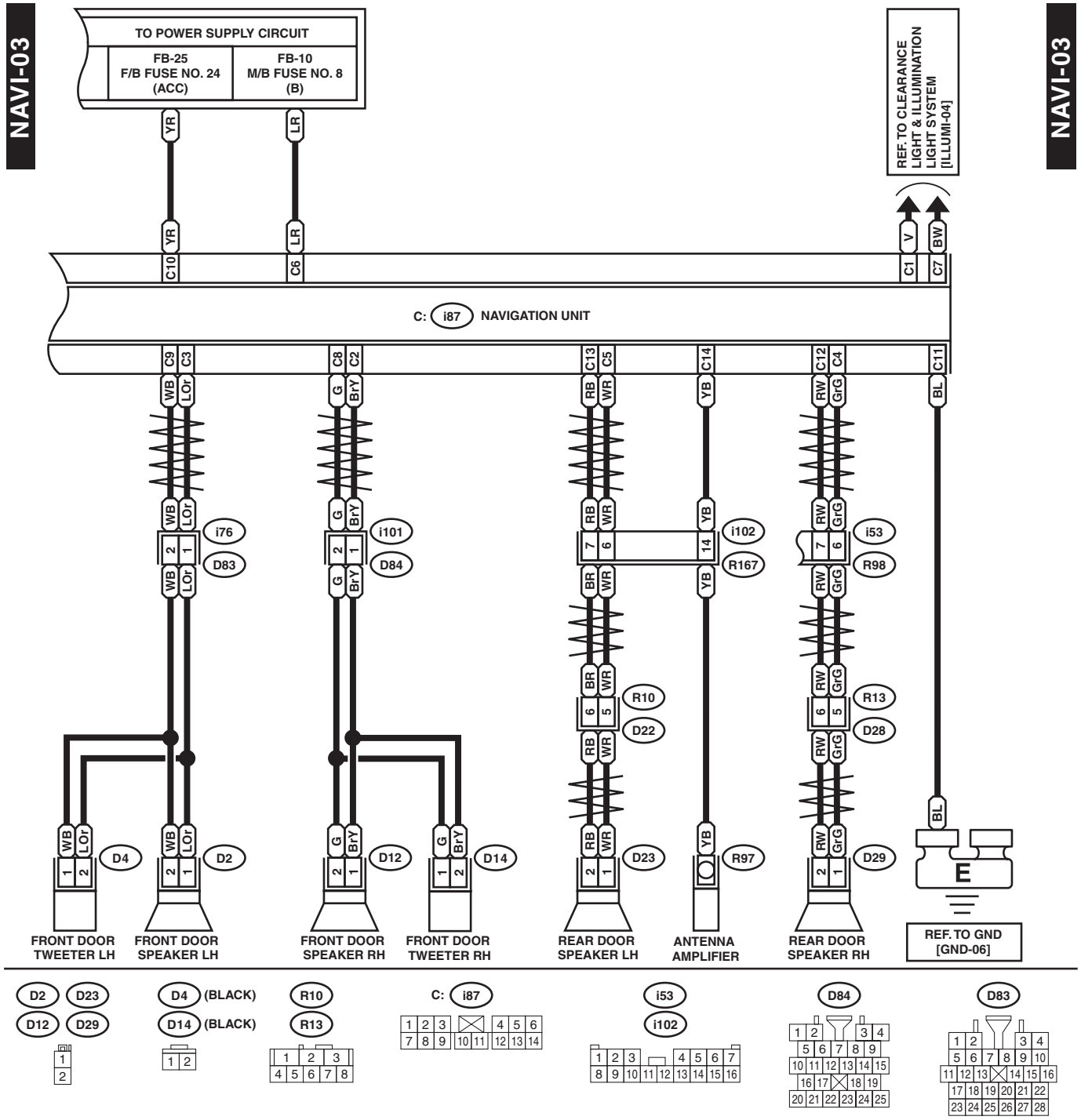

WI-21449

34.Horn System

A: WIRING DIAGRAM

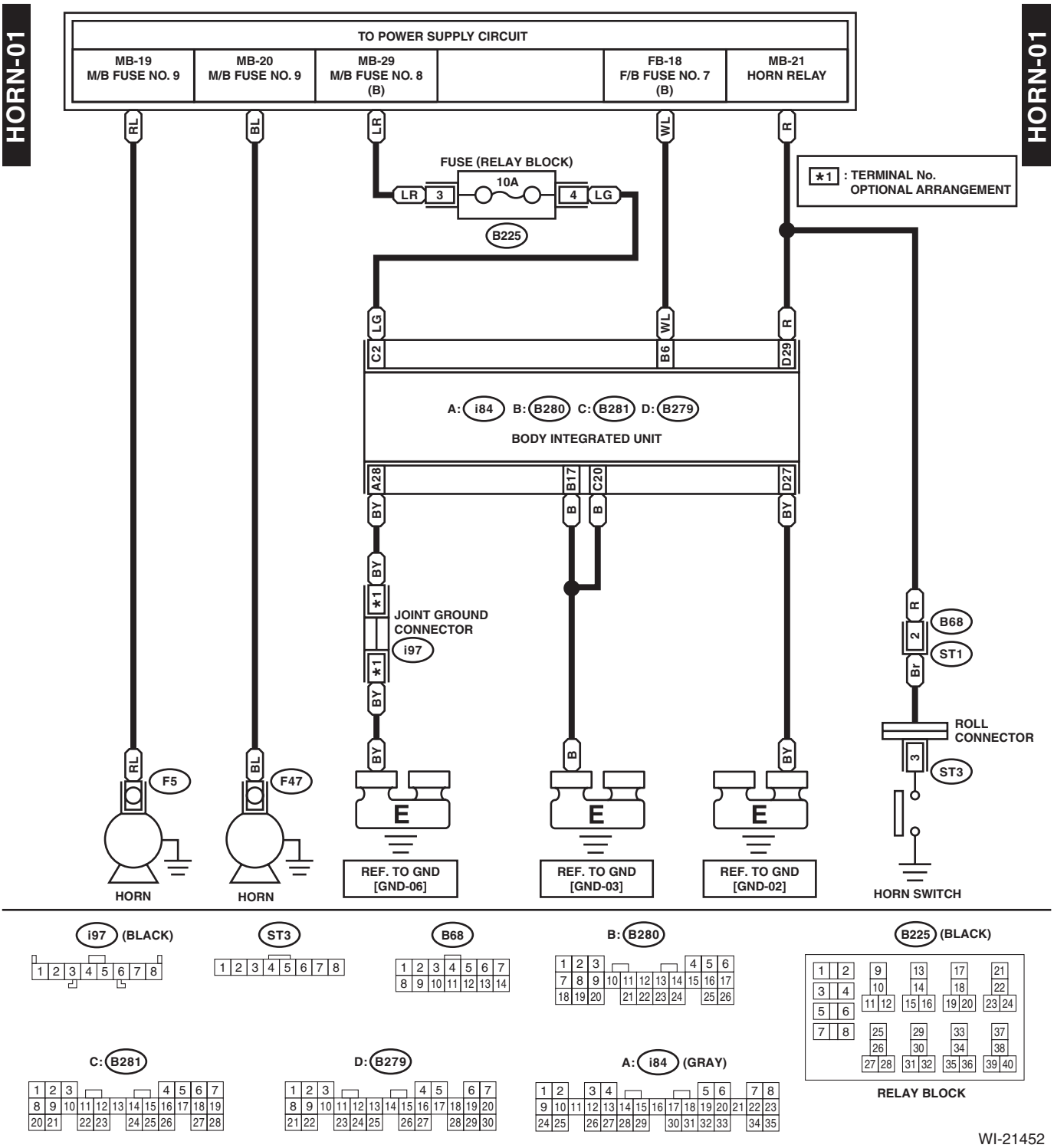

35.Power Window System

A: WIRING DIAGRAM

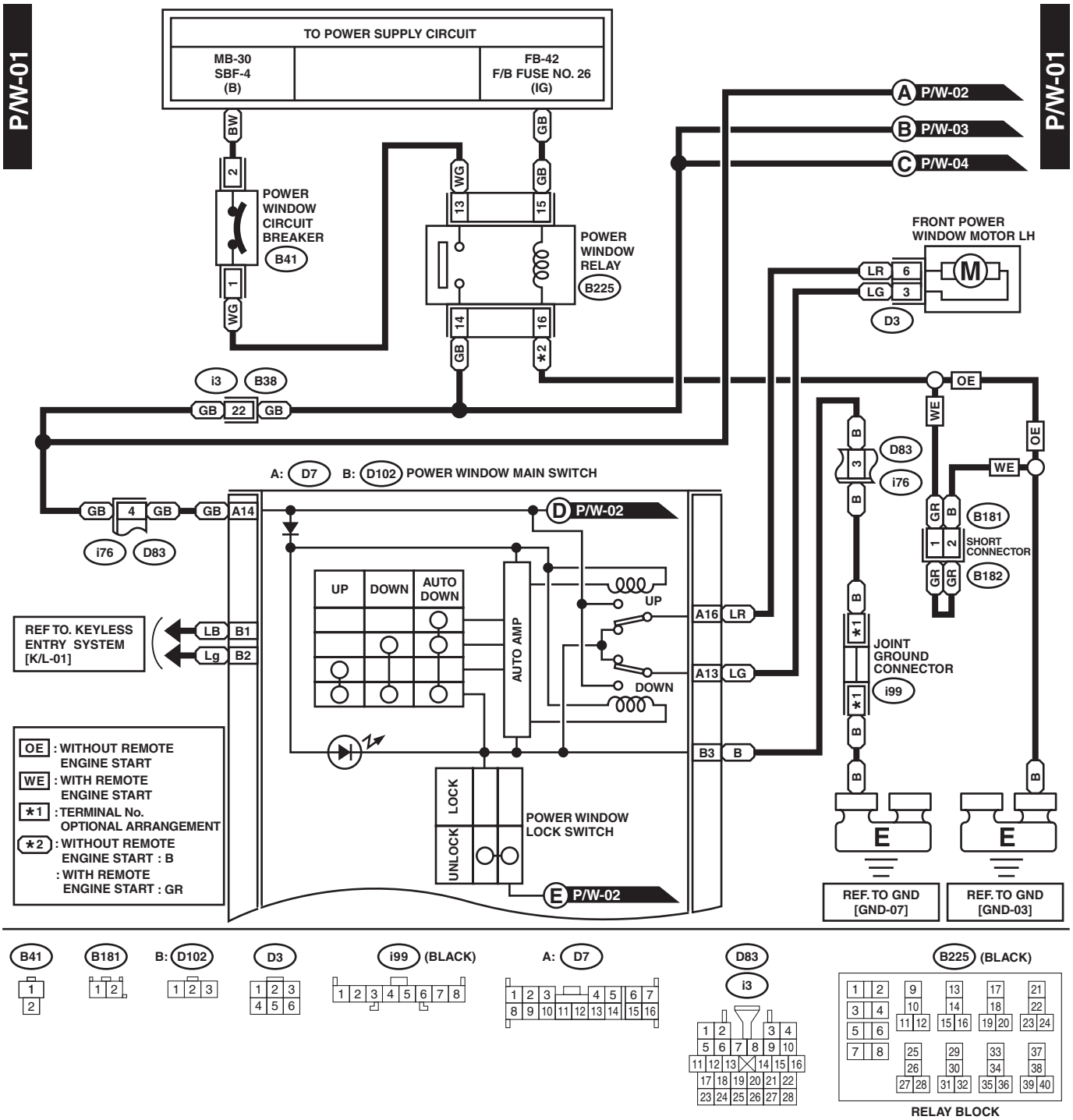

WI-21453

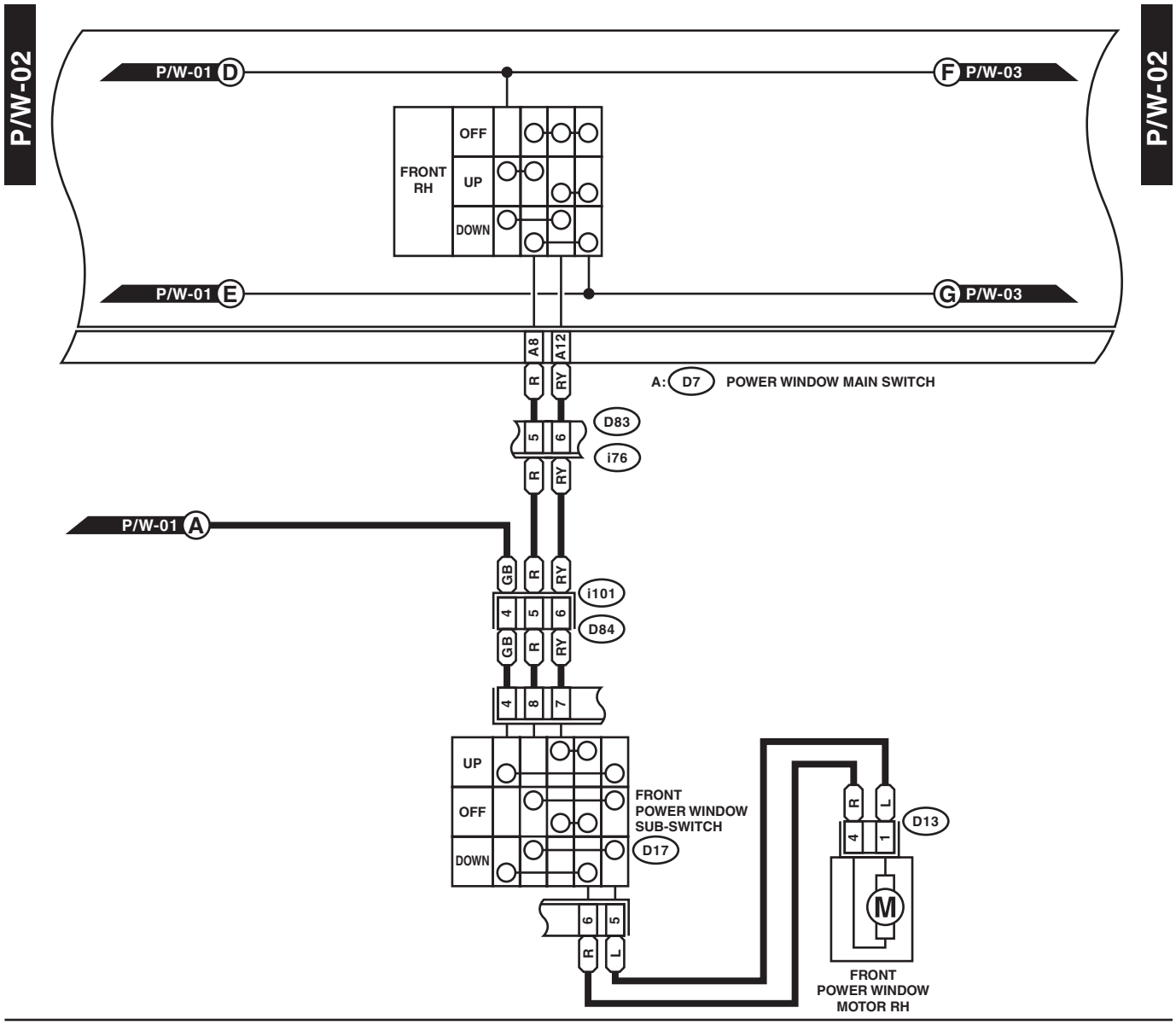
P/W-02
P/W-01 D
F P/W-03
FRONT RH
OFF
UP
DOWN
P/W-01 E
G P/W-03
A8
A12
R
RY
A: D7 POWER WINDOW MAIN SWITCH
D83
5
6
i76
P/W-01 A
GB
i101
4
D84
8
7
FRONT POWER WINDOW SUB-SWITCH
D17
L
D13
M
FRONT POWER WINDOW MOTOR RH

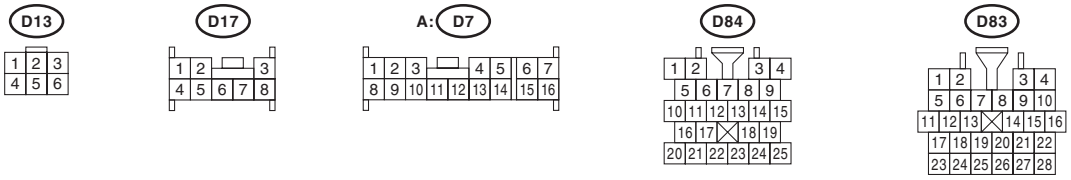
D13
D17
A: D7
D84
D83

WI-22155

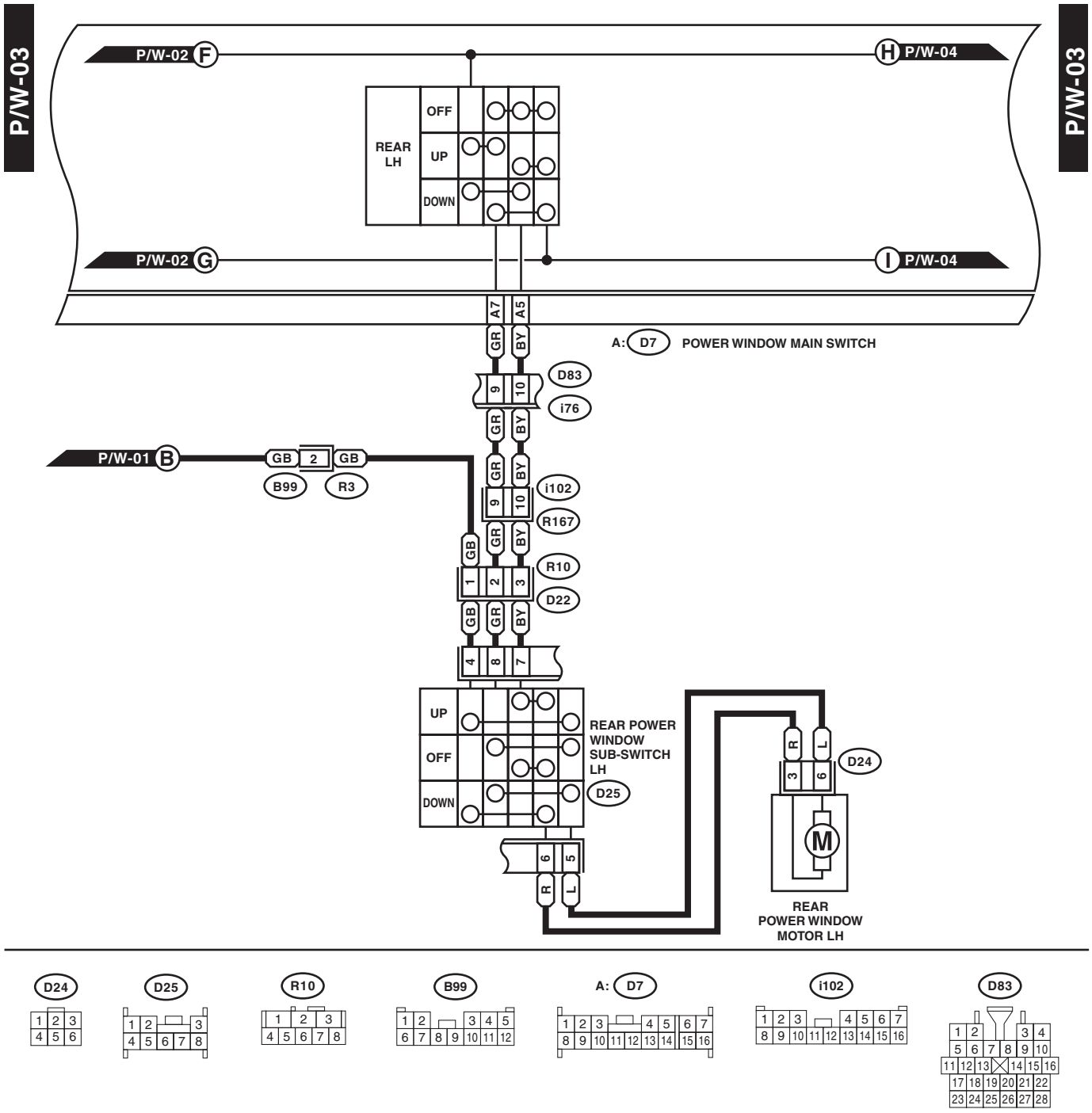
P/W-03
P/W-02 F
H P/W-04
REAR LH
OFF
UP
DOWN
P/W-02 G
I P/W-04
A7
A5
GR
BY
A: D7 POWER WINDOW MAIN SWITCH
D83
9
10
i76
P/W-01 B
GB
2
B99
R3
i102
R167
R10
1
3
D22
4
8
7
REAR POWER WINDOW SUB-SWITCH LH
D25
6
5
R
L
D24
M
REAR POWER WINDOW MOTOR LH
D24
D25
R10
B99
A: D7
i102
D83

WI-22156

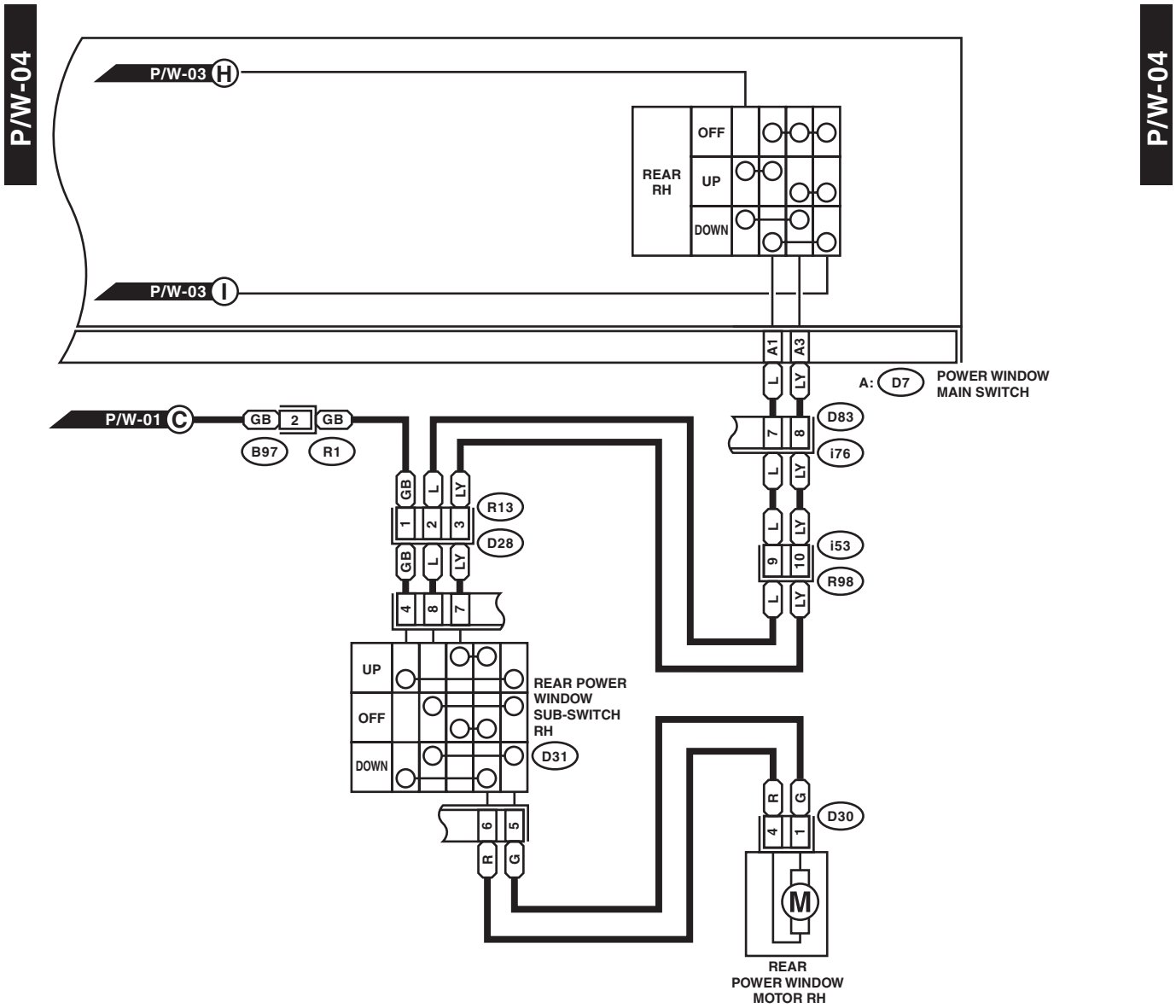
P/W-04
P/W-03 H
P/W-03 I
REAR RH
OFF
UP
DOWN
A1
A3
L
LY
A: D7
POWER WINDOW MAIN SWITCH
P/W-01 C
GB
2
GB
B97
R1
D83
i76
i53
R98
R13
D28
REAR POWER WINDOW SUB-SWITCH RH
D31
R
G
D30
M
REAR POWER WINDOW MOTOR RH

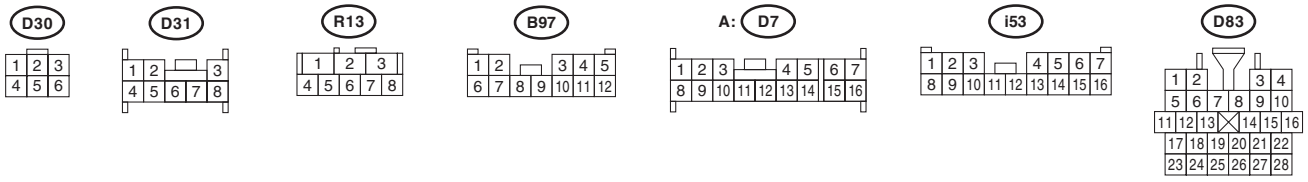
D30
D31
R13
B97
A: D7
i53
D83

WI-22157

36.Remote Control Mirror System

A: WIRING DIAGRAM

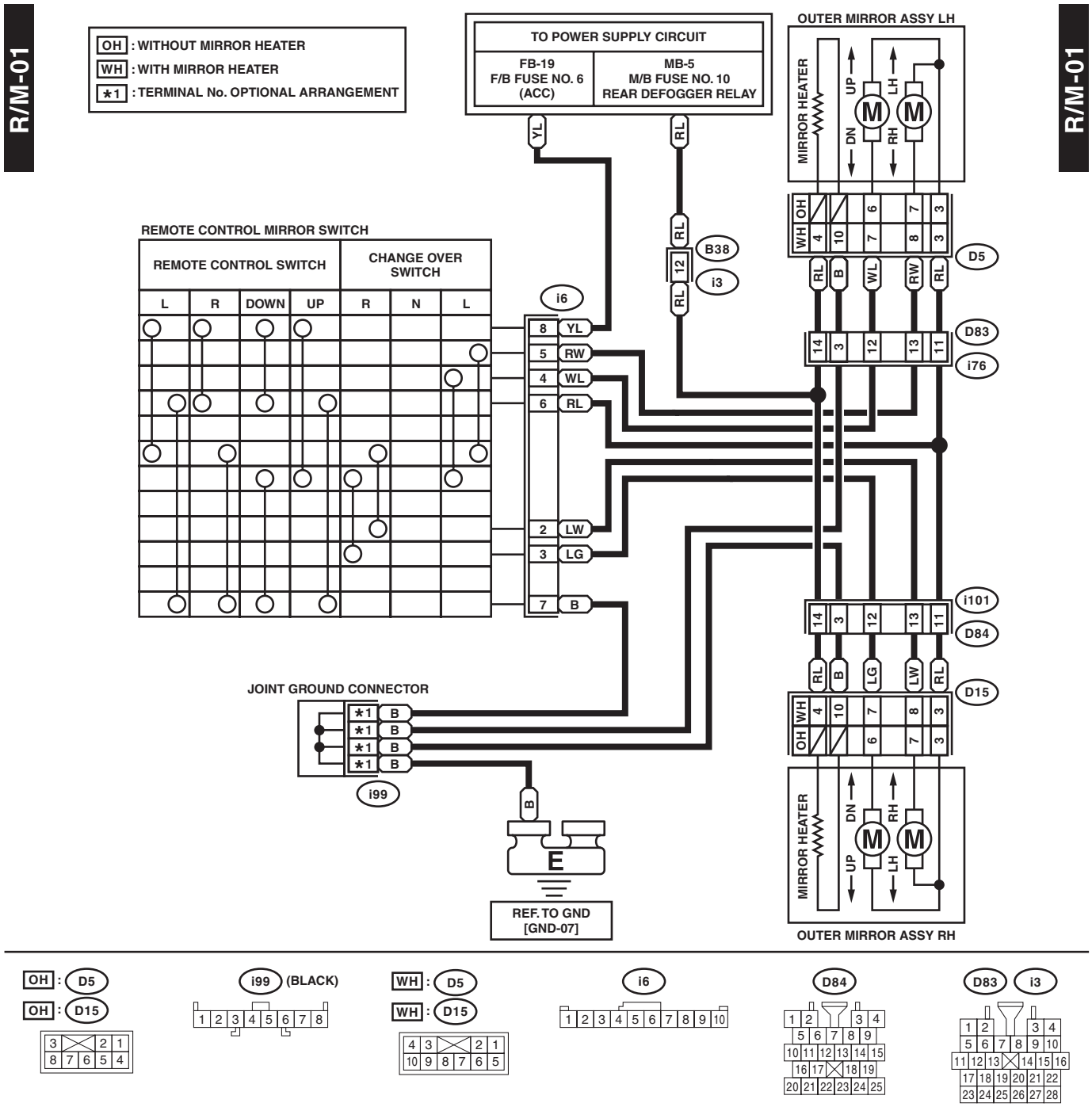

WI-22960

37.Rear Defogger System

A: WIRING DIAGRAM

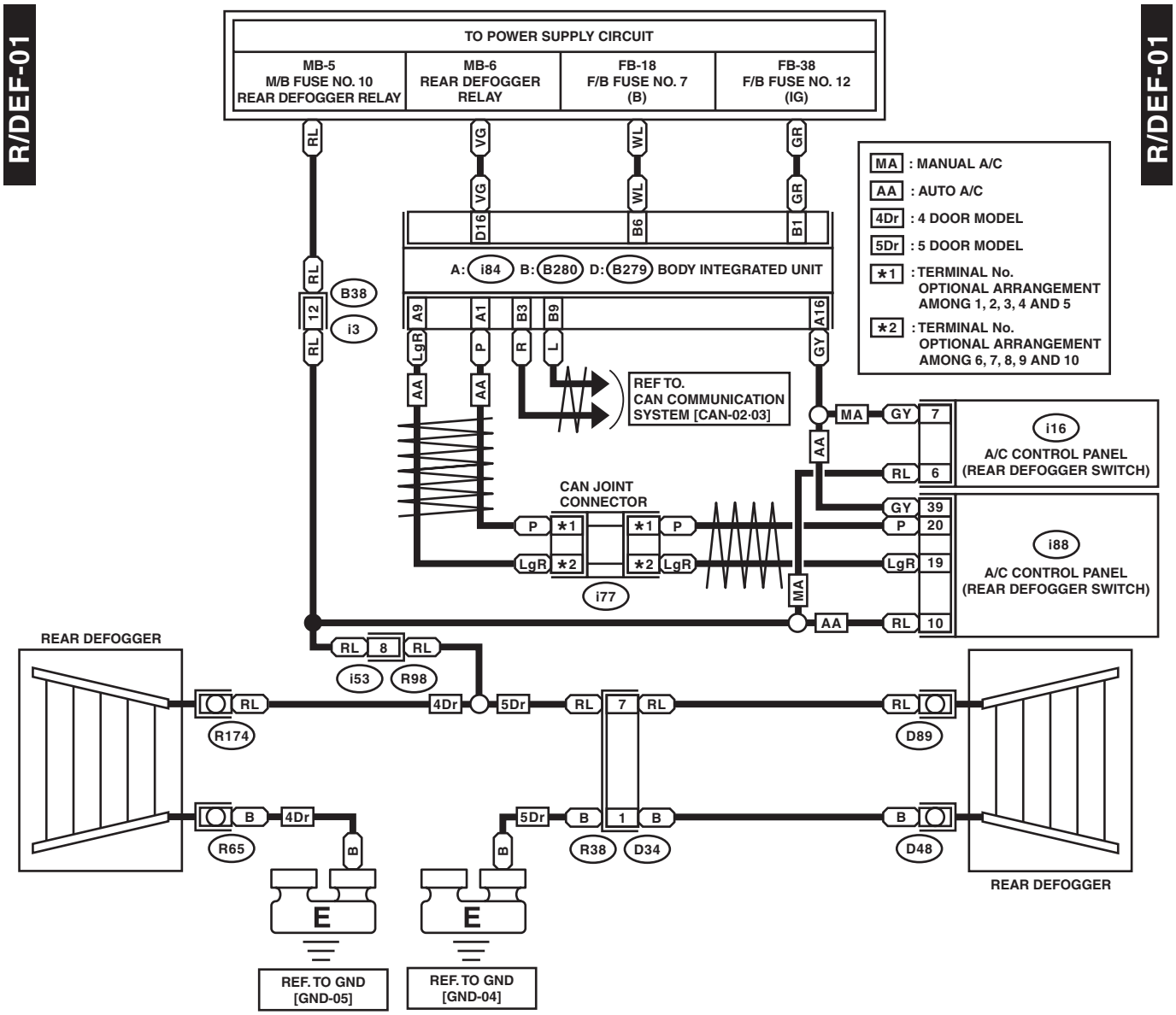

38.Combination Meter System

A: WIRING DIAGRAM

1. NORMAL METER

C/M(NM)-01

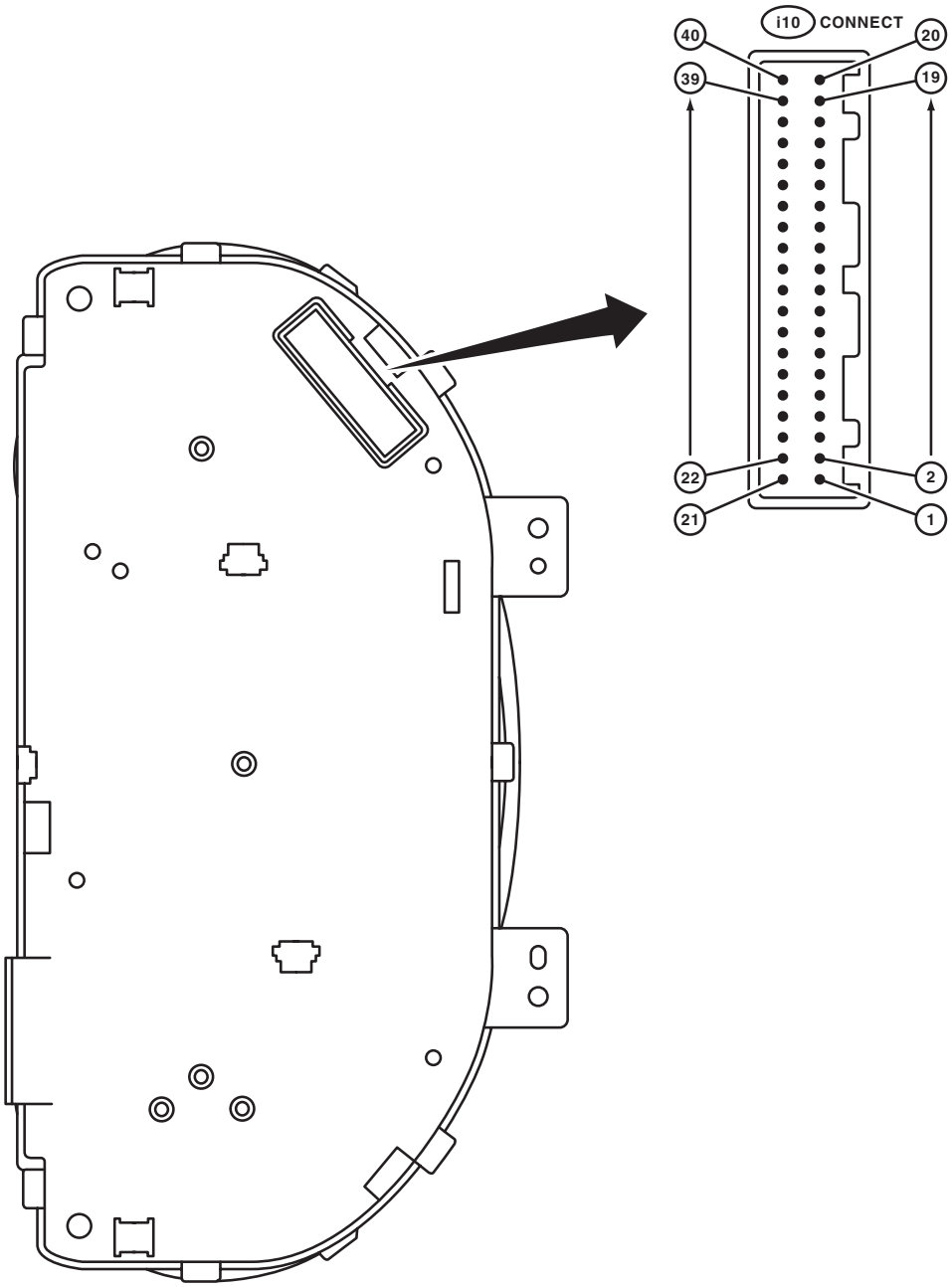

C/M(NM)-01

WI-16969

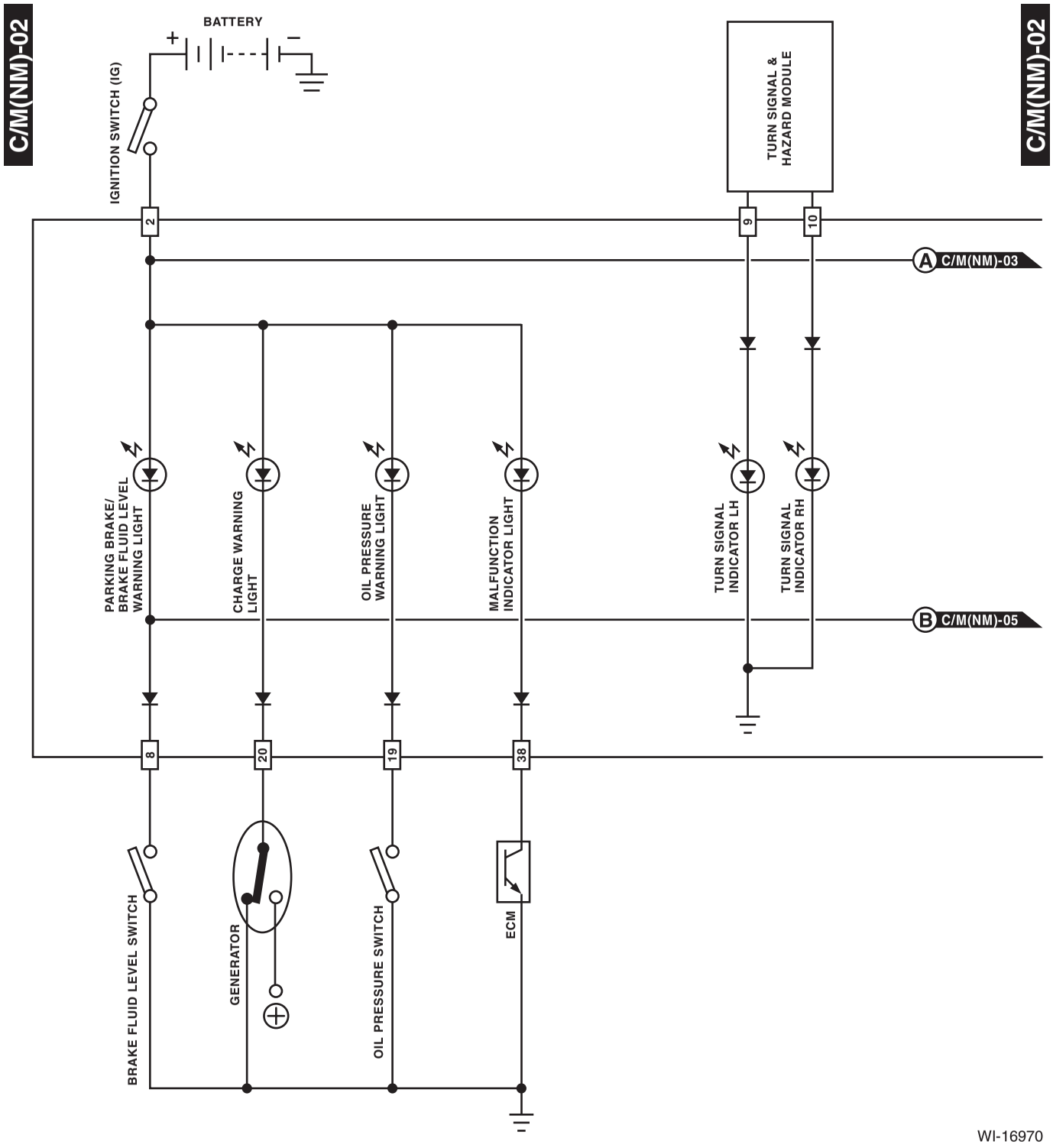
C/M(NM)-02
BATTERY
+
−
IGNITION SWITCH (IG)
2
TURN SIGNAL & HAZARD MODULE
9
10
C/M(NM)-02
A C/M(NM)-03
PARKING BRAKE/ BRAKE FLUID LEVEL WARNING LIGHT
CHARGE WARNING LIGHT
OIL PRESSURE WARNING LIGHT
MALFUNCTION INDICATOR LIGHT
TURN SIGNAL INDICATOR LH
TURN SIGNAL INDICATOR RH
B C/M(NM)-05
8
20
19
38
BRAKE FLUID LEVEL SWITCH
GENERATOR
OIL PRESSURE SWITCH
ECM

WI-16970

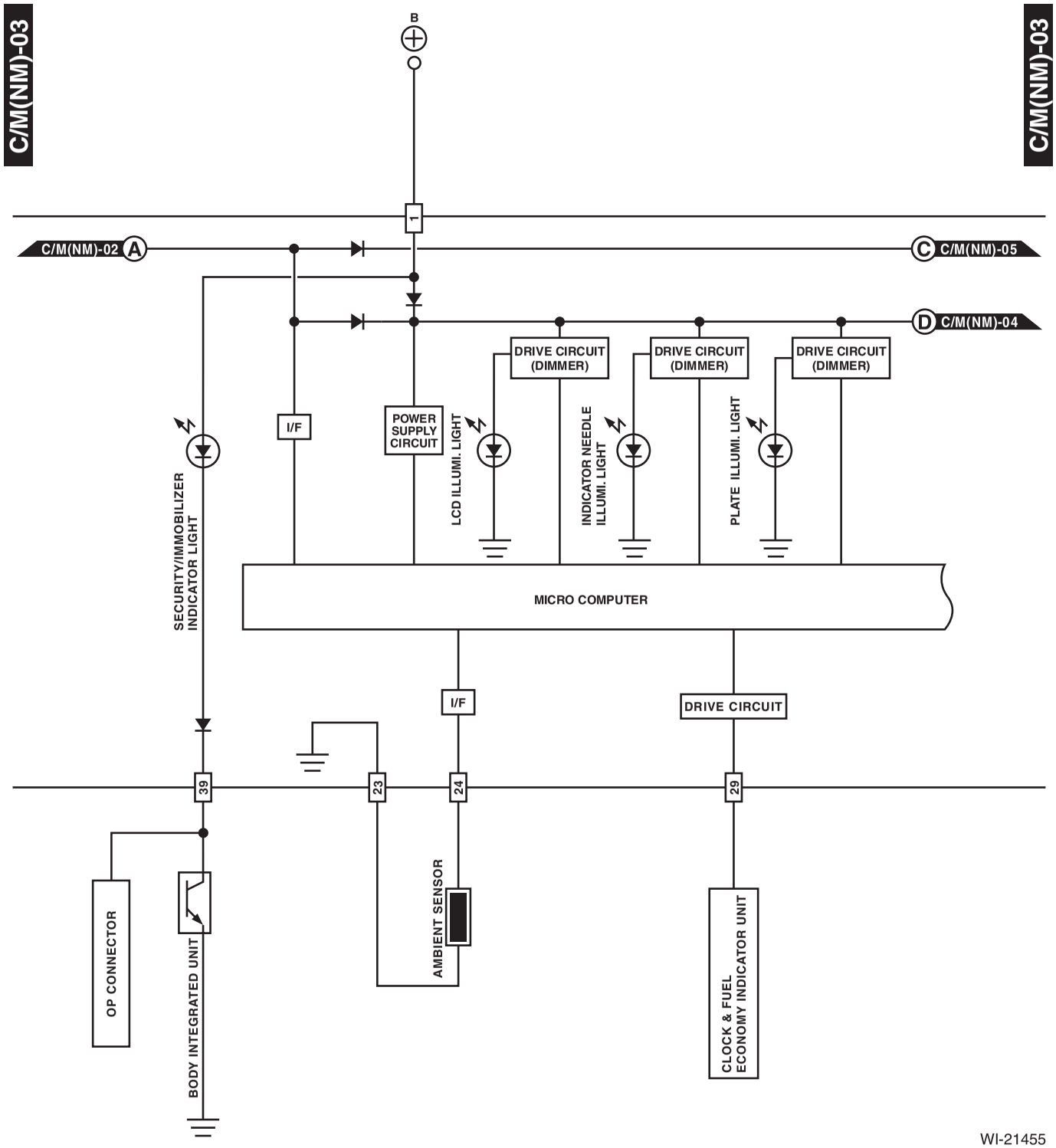
C/M(NM)-03
C/M(NM)-03
B
1
C/M(NM)-02 A
C C/M(NM)-05
D C/M(NM)-04
DRIVE CIRCUIT (DIMMER)
DRIVE CIRCUIT (DIMMER)
DRIVE CIRCUIT (DIMMER)
I/F
POWER SUPPLY CIRCUIT
LCD ILLUMI. LIGHT
INDICATOR NEEDLE ILLUMI. LIGHT
PLATE ILLUMI. LIGHT
SECURITY/IMMOBILIZER INDICATOR LIGHT
MICRO COMPUTER
I/F
DRIVE CIRCUIT
39
23
24
29
OP CONNECTOR
BODY INTEGRATED UNIT
AMBIENT SENSOR
CLOCK & FUEL ECONOMY INDICATOR UNIT

WI-21455

C/M(NM)-04

ABS : WITHOUT VDC
VDC : WITH VDC
WN : WITH NAVIGATION

C/M(NM)-04

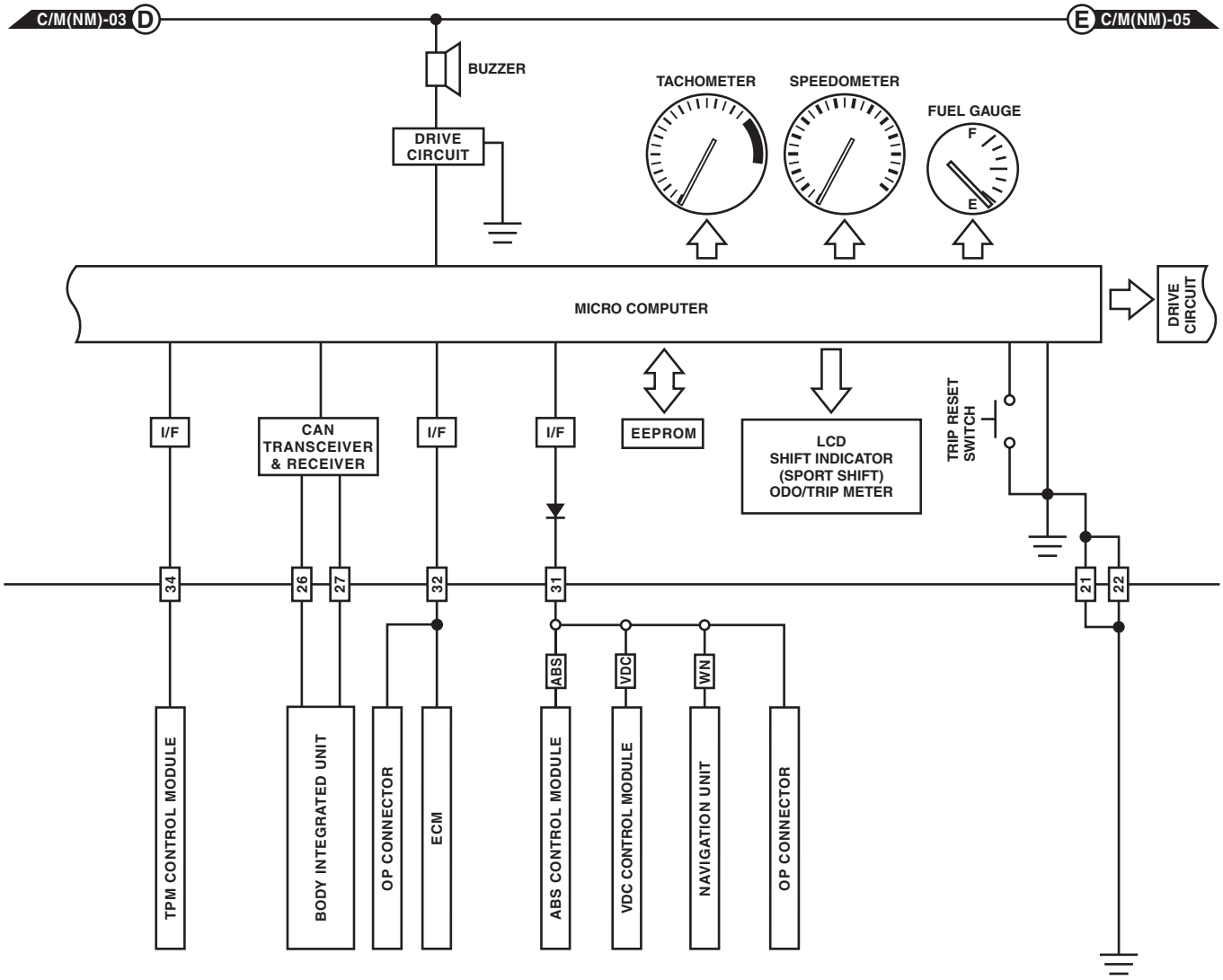

WI-21456

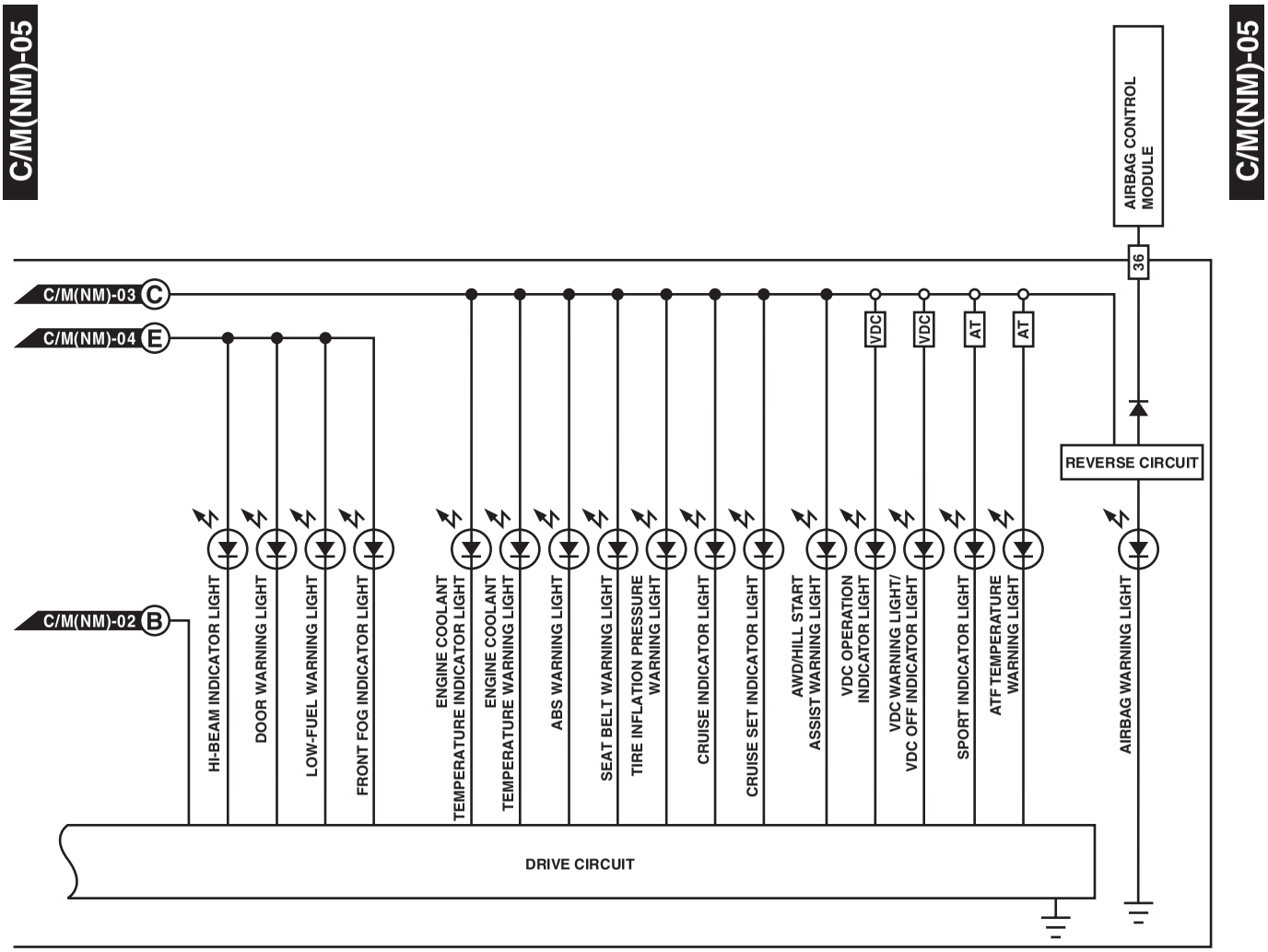

VDC : WITH VDC

WI-22139

2. LUMINESCENT METER

C/M(LM)-01

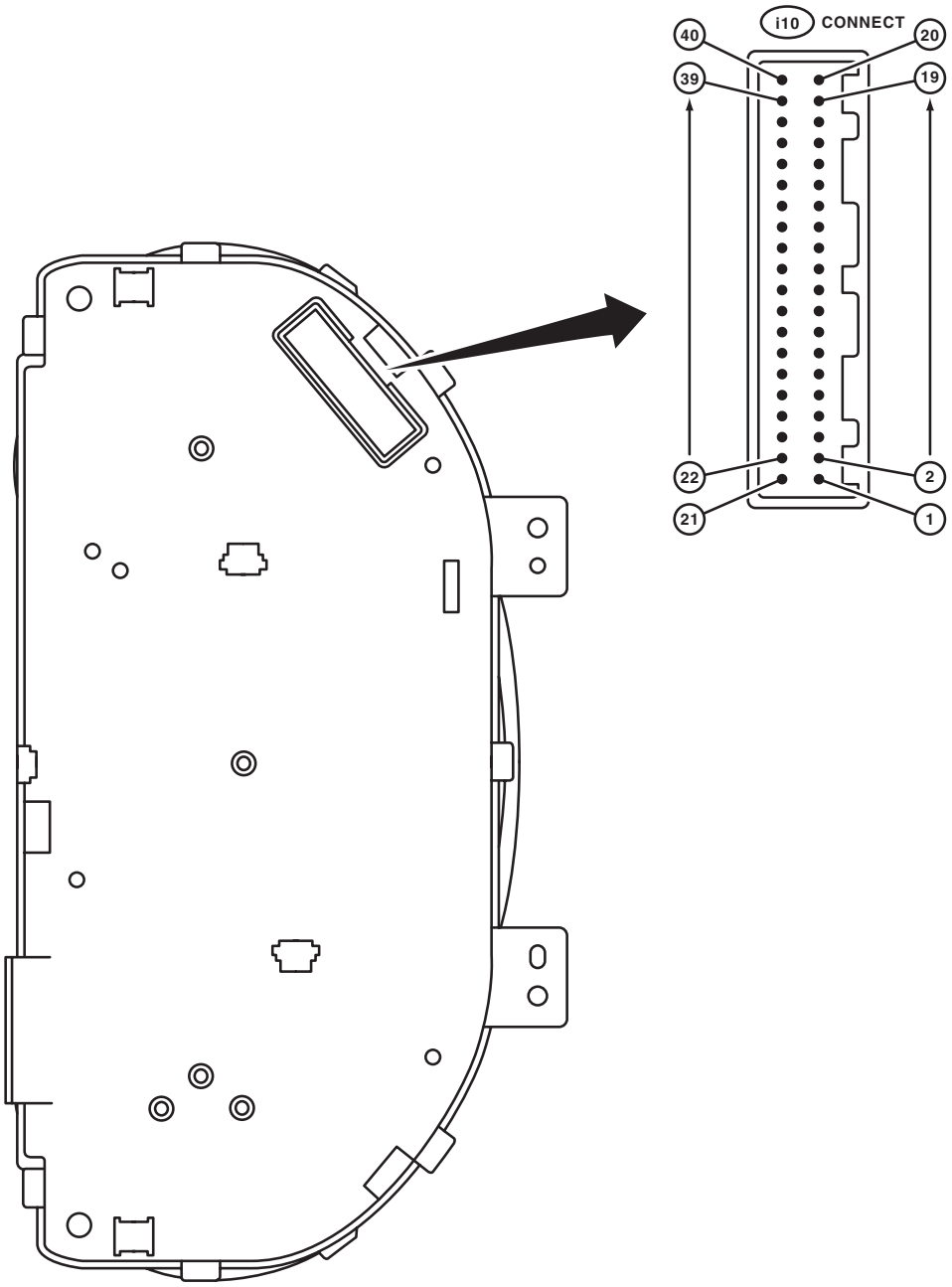

C/M(LM)-01

WI-16973

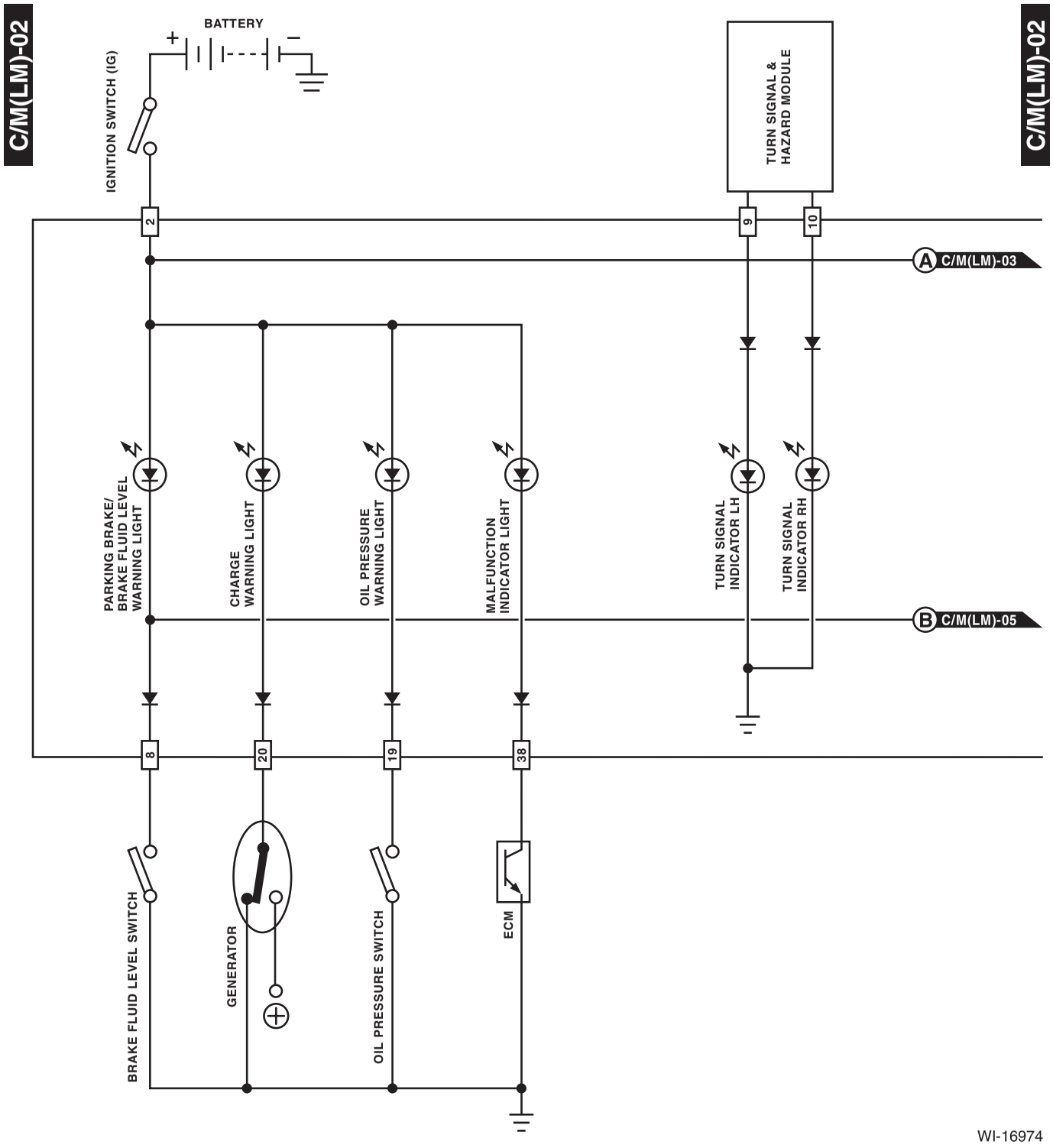
C/M(LM)-02
BATTERY
+
−
IGNITION SWITCH (IG)
2
TURN SIGNAL &
HAZARD MODULE
9
10
C/M(LM)-02
A
C/M(LM)-03
PARKING BRAKE/
BRAKE FLUID LEVEL
WARNING LIGHT
CHARGE
WARNING LIGHT
OIL PRESSURE
WARNING LIGHT
MALFUNCTION
INDICATOR LIGHT
TURN SIGNAL
INDICATOR LH
TURN SIGNAL
INDICATOR RH
B
C/M(LM)-05
8
20
19
38
BRAKE FLUID LEVEL SWITCH
GENERATOR
OIL PRESSURE SWITCH
ECM

WI-16974

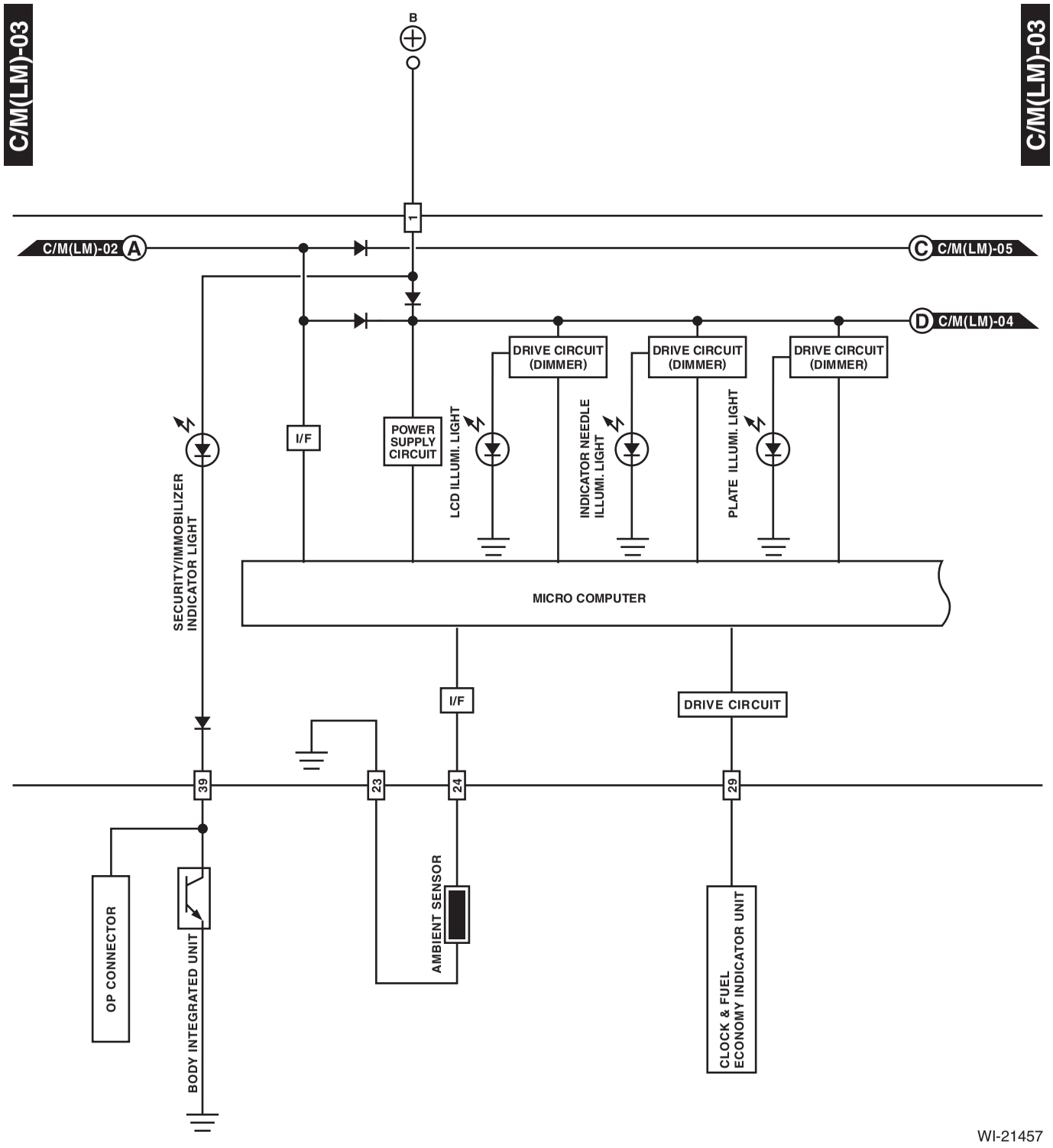
C/M(LM)-03
C/M(LM)-03
B
1
C/M(LM)-02 A
C C/M(LM)-05
D C/M(LM)-04
DRIVE CIRCUIT (DIMMER)
DRIVE CIRCUIT (DIMMER)
DRIVE CIRCUIT (DIMMER)
SECURITY/IMMOBILIZER INDICATOR LIGHT
I/F
POWER SUPPLY CIRCUIT
LCD ILLUMI. LIGHT
INDICATOR NEEDLE ILLUMI. LIGHT
PLATE ILLUMI. LIGHT
MICRO COMPUTER
I/F
DRIVE CIRCUIT
39
23
24
29
OP CONNECTOR
BODY INTEGRATED UNIT
AMBIENT SENSOR
CLOCK & FUEL ECONOMY INDICATOR UNIT

WI-21457

C/M(LM)-04

ABS : WITHOUT VDC
VDC : WITH VDC
WN : WITH NAVIGATION

C/M(LM)-04

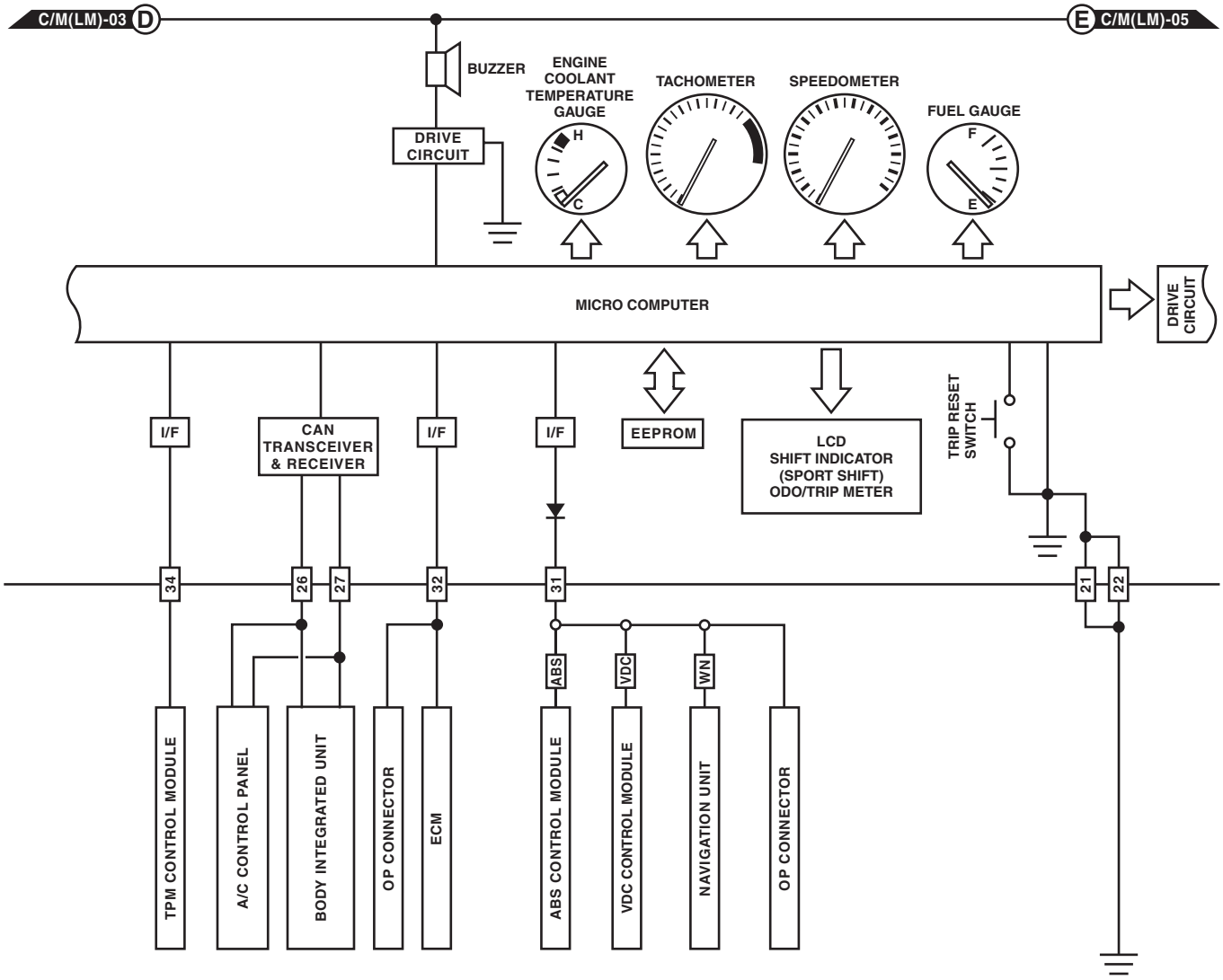

WI-21458

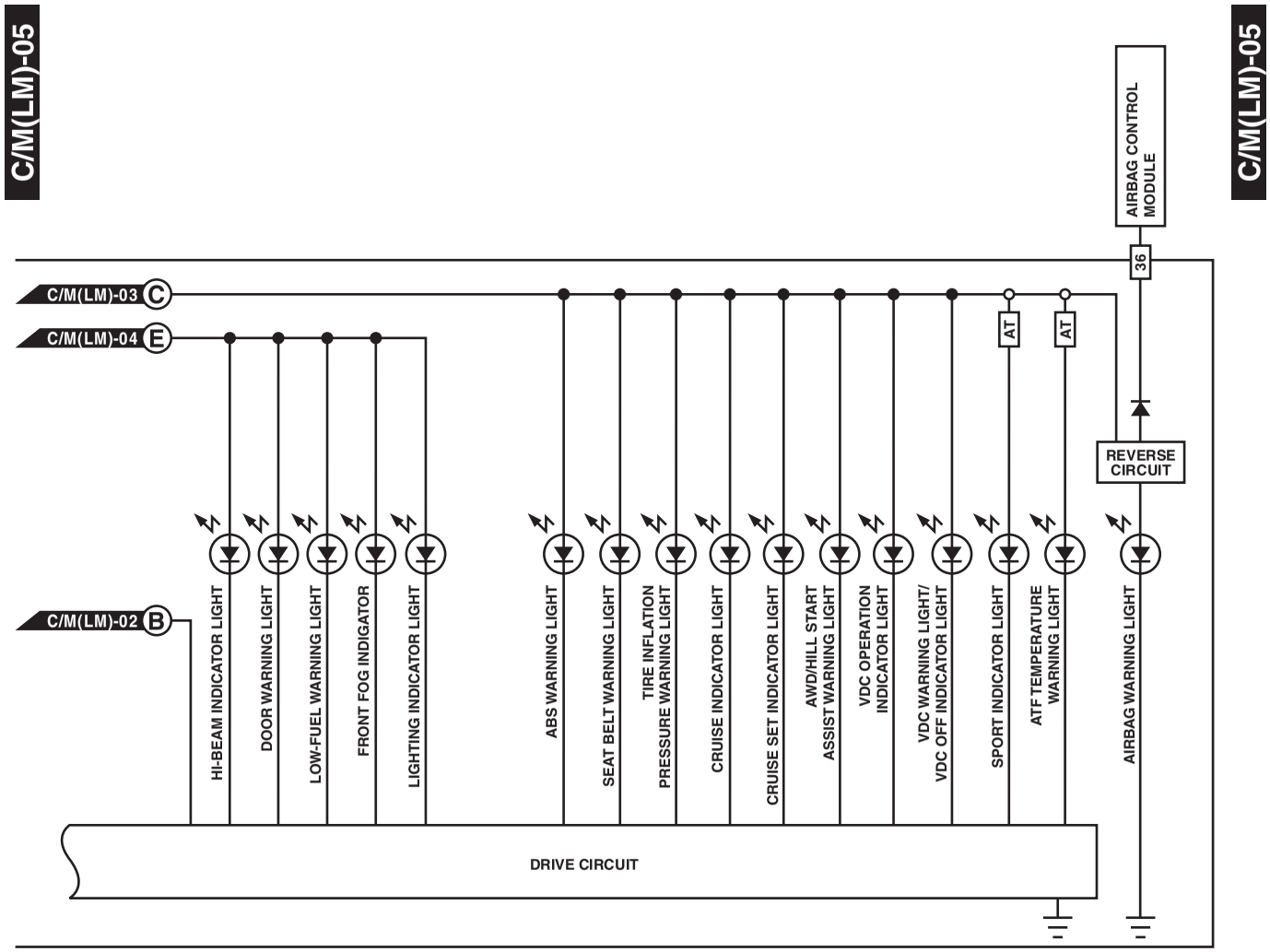
C/M(LM)-05
C/M(LM)-05
C/M(LM)-03 C
C/M(LM)-04 E
C/M(LM)-02 B
HI-BEAM INDICATOR LIGHT
DOOR WARNING LIGHT
LOW-FUEL WARNING LIGHT
FRONT FOG INDIGATOR
LIGHTING INDICATOR LIGHT
ABS WARNING LIGHT
SEAT BELT WARNING LIGHT
TIRE INFLATION PRESSURE WARNING LIGHT
CRUISE INDICATOR LIGHT
CRUISE SET INDICATOR LIGHT
AWD/HILL START ASSIST WARNING LIGHT
VDC OPERATION INDICATOR LIGHT
VDC WARNING LIGHT/ VDC OFF INDICATOR LIGHT
SPORT INDICATOR LIGHT
ATF TEMPERATURE WARNING LIGHT
AIRBAG WARNING LIGHT
AT
AT
REVERSE CIRCUIT
36
AIRBAG CONTROL MODULE
DRIVE CIRCUIT

WI-21459

39.Speedometer System

A: WIRING DIAGRAM

SP-01

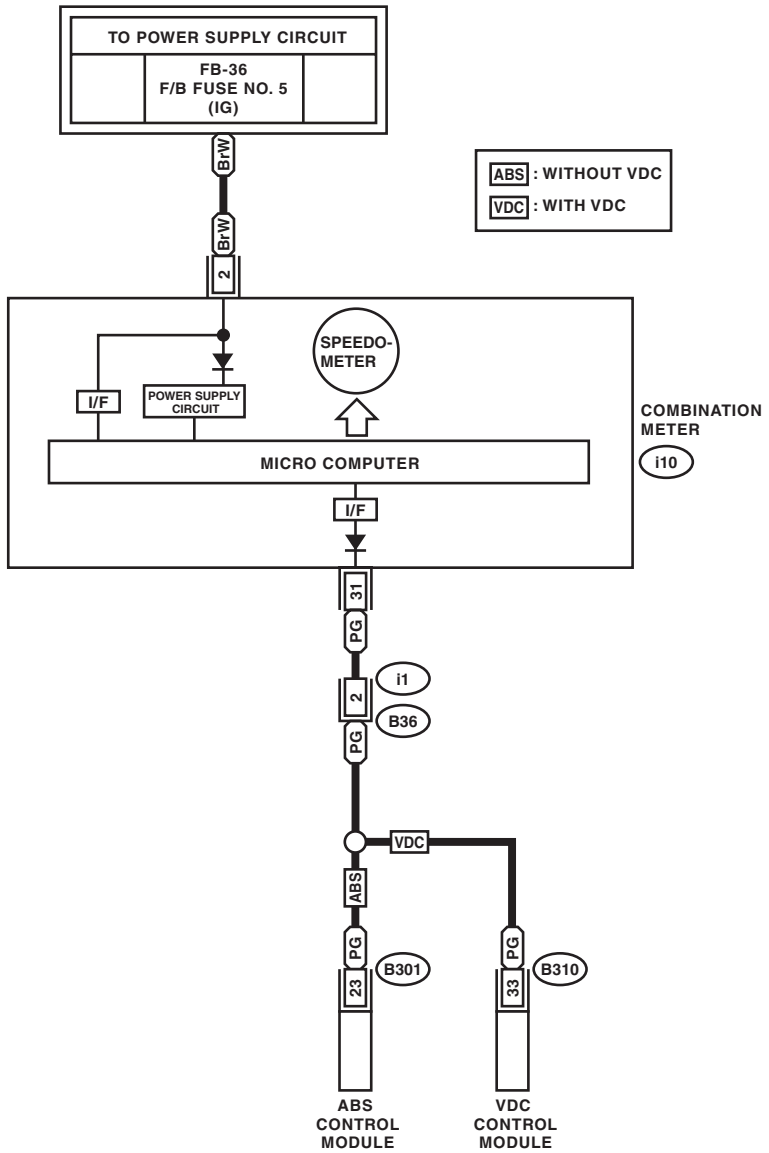

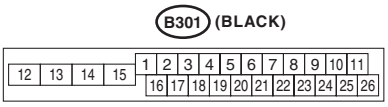

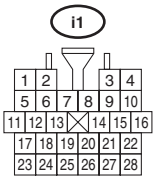

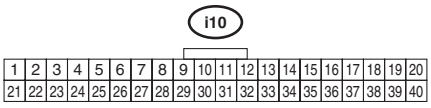

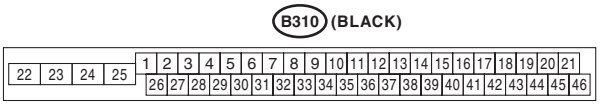

WI-16977

40.Clock System

A: WIRING DIAGRAM

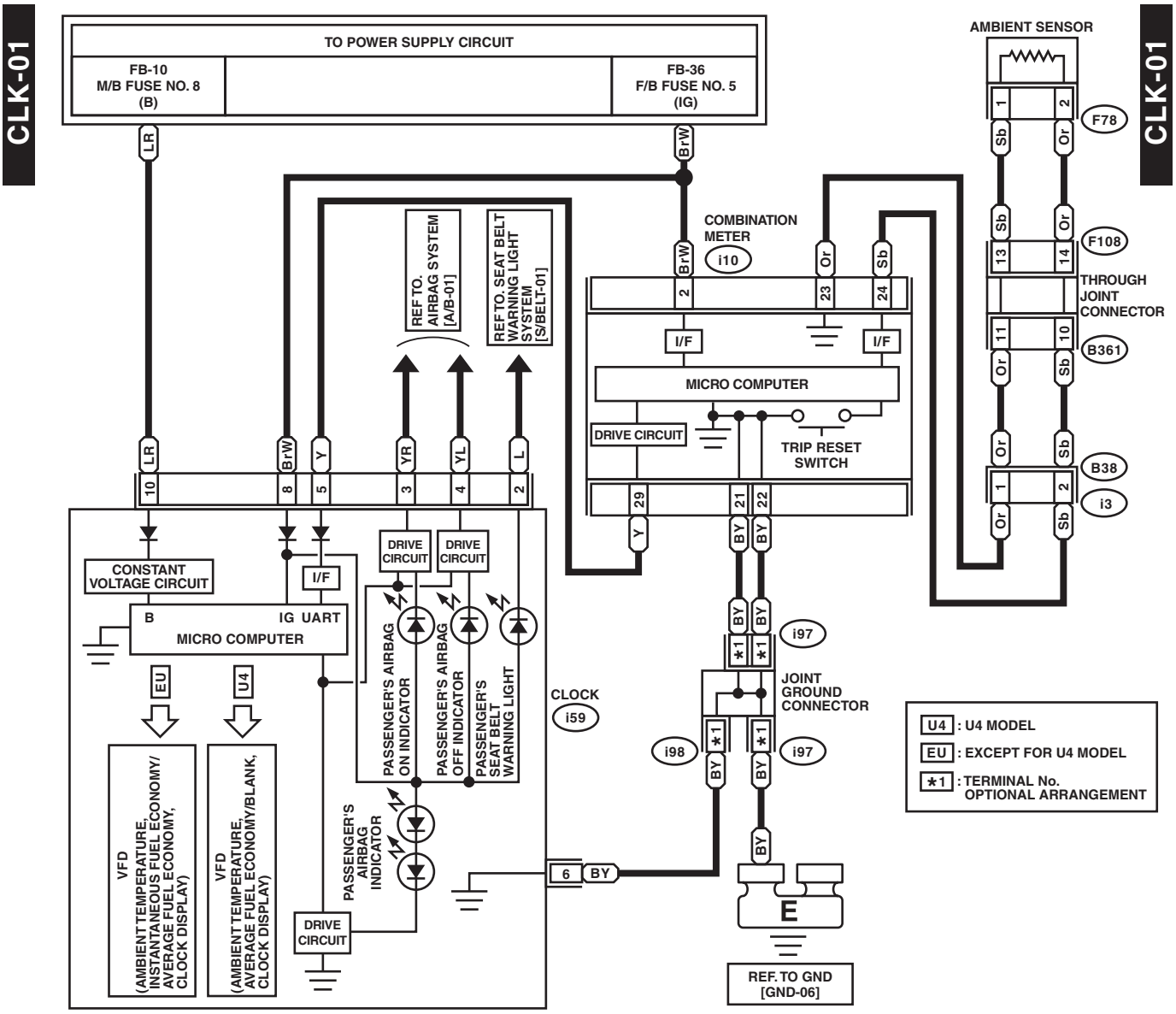

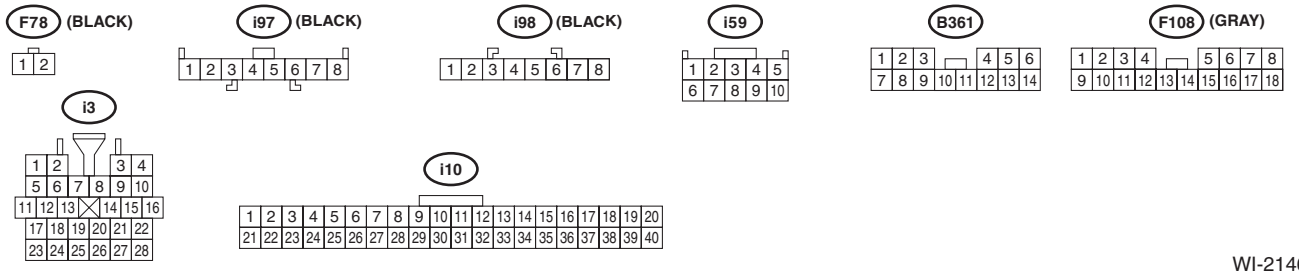

WI-21460

41.Fuel Gauge System

A: WIRING DIAGRAM

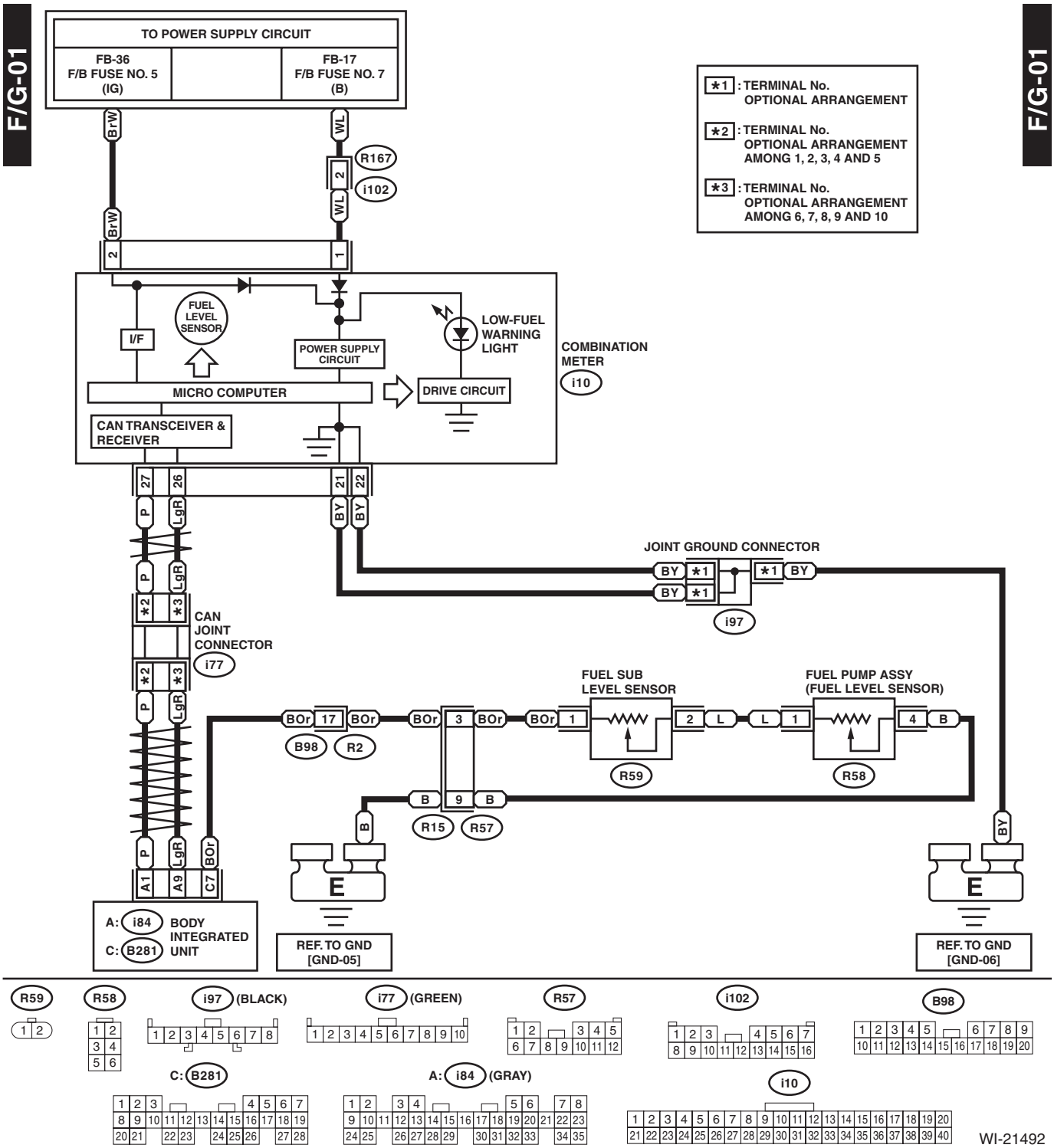

42.Coolant Temperature System

A: WIRING DIAGRAM

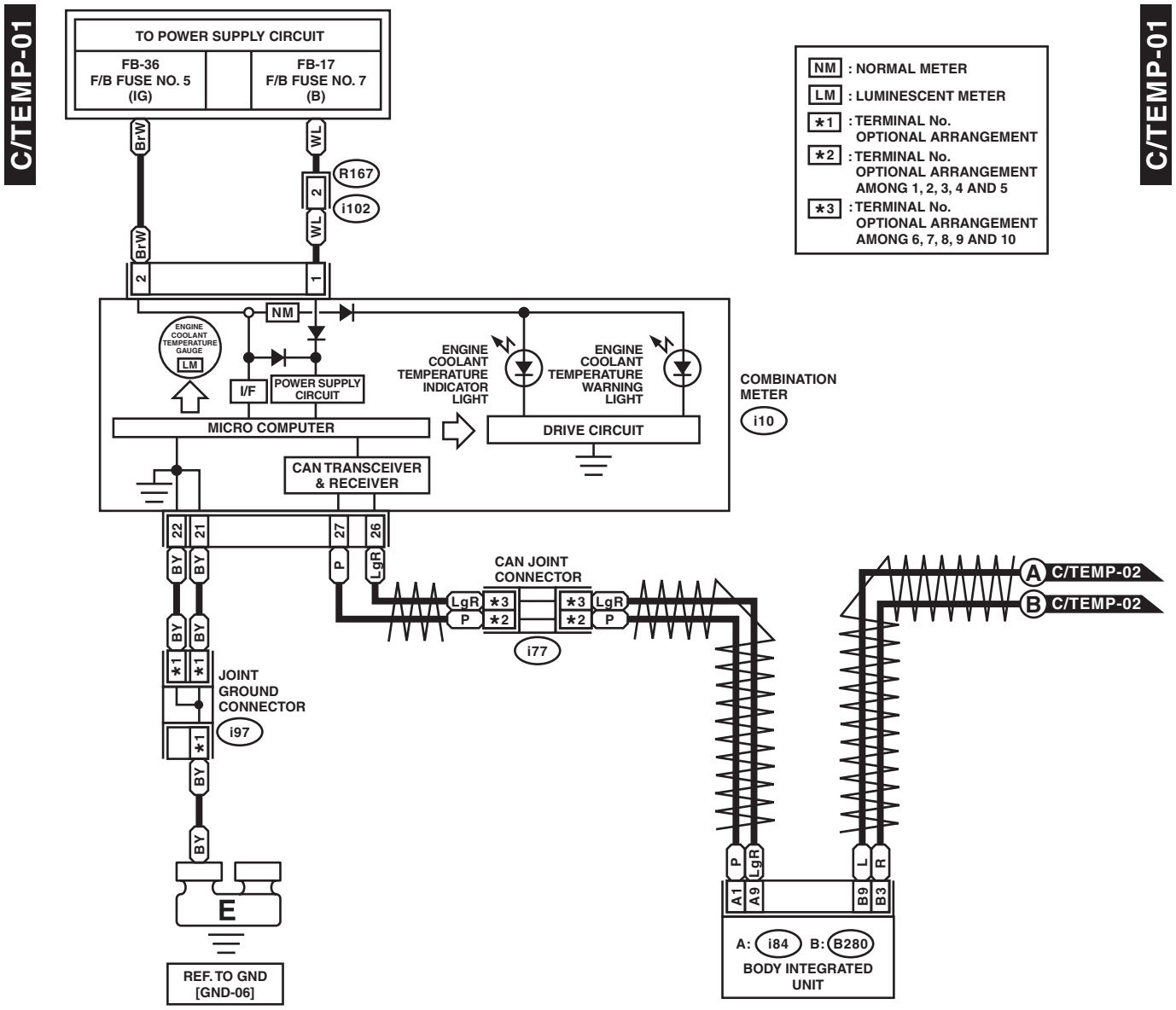

C/TEMP-02

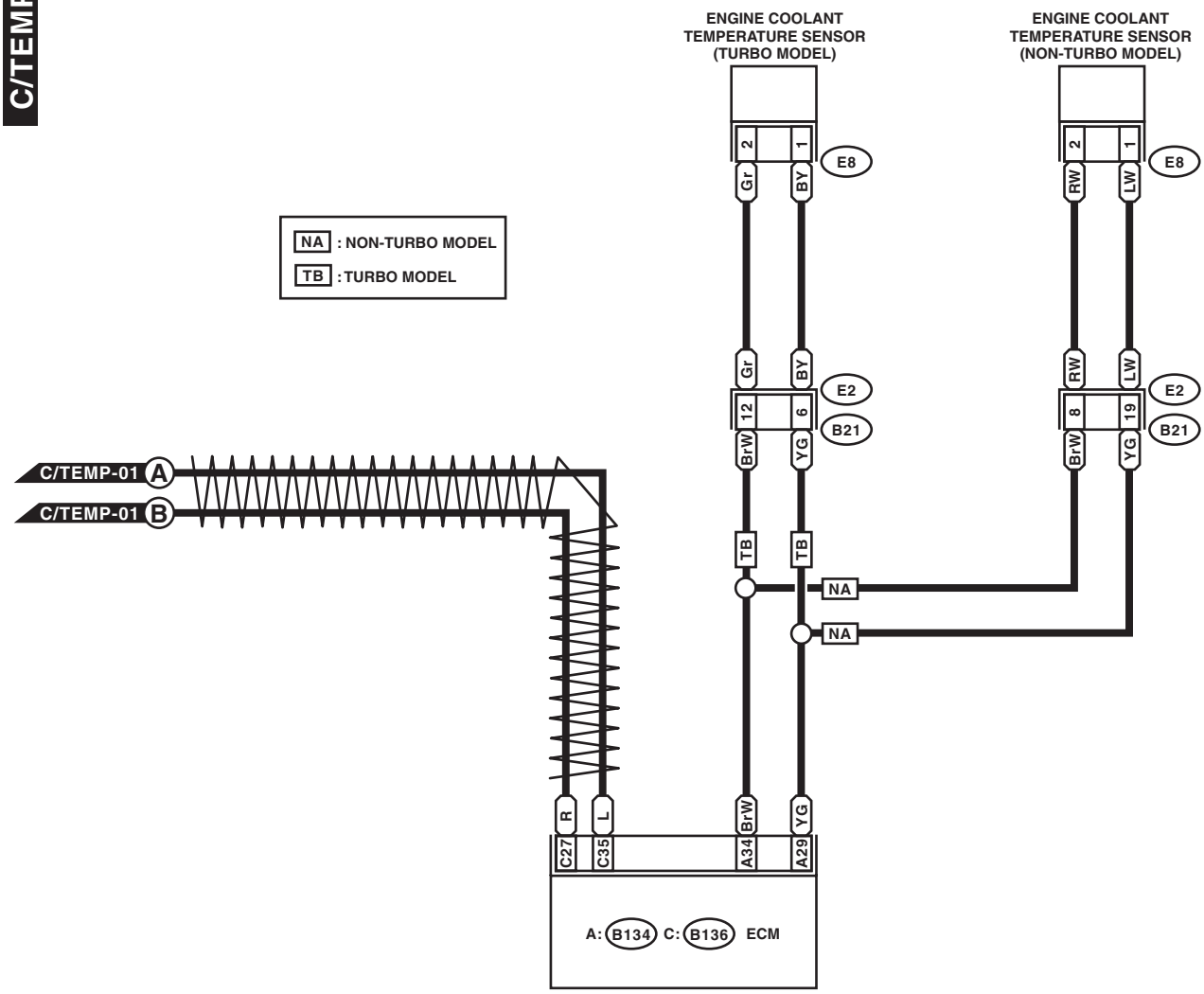

C/TEMP-02

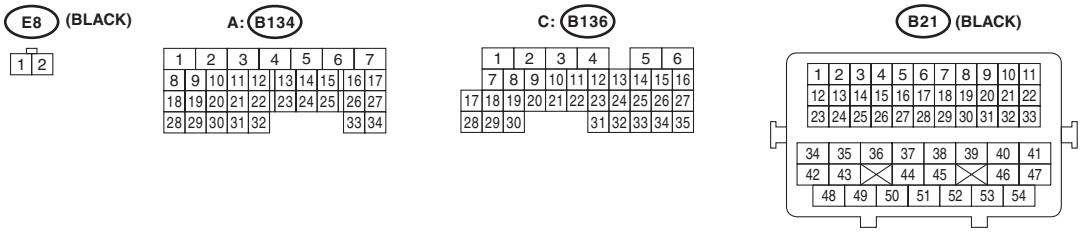

WI-22961

43.Oil Pressure Warning Light System

A: WIRING DIAGRAM

OIL/P-01

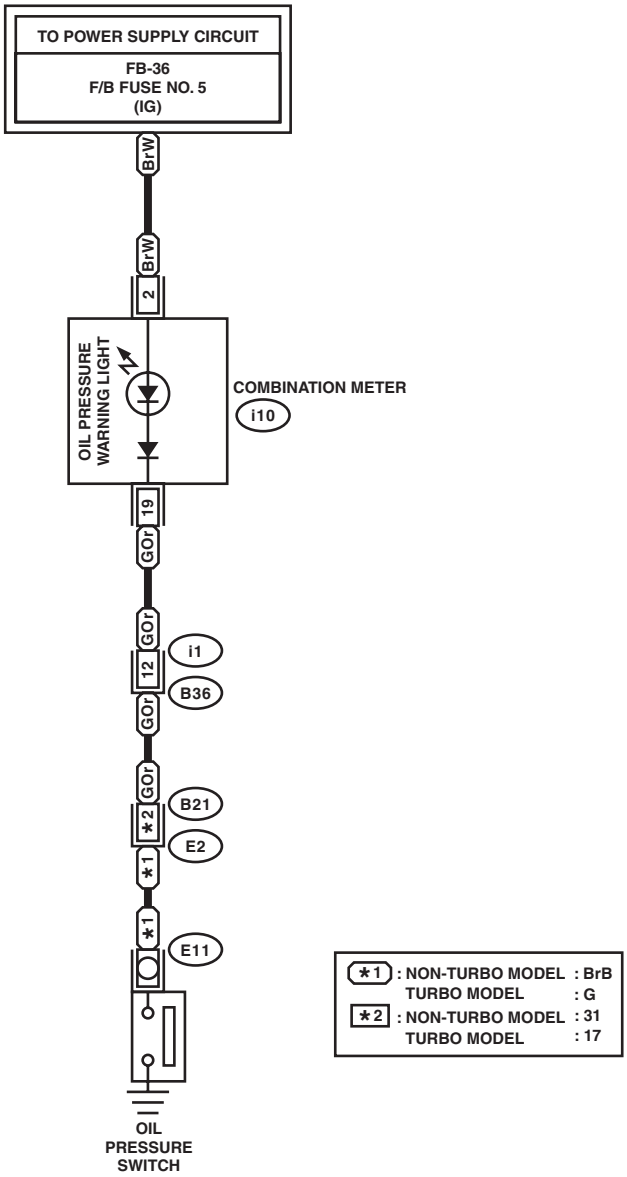

OIL/P-01

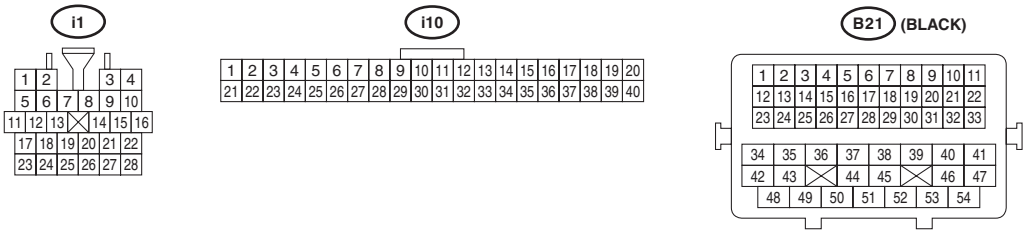

WI-22962

44.Parking Brake / Brake Fluid Level Warning Light System

A: WIRING DIAGRAM

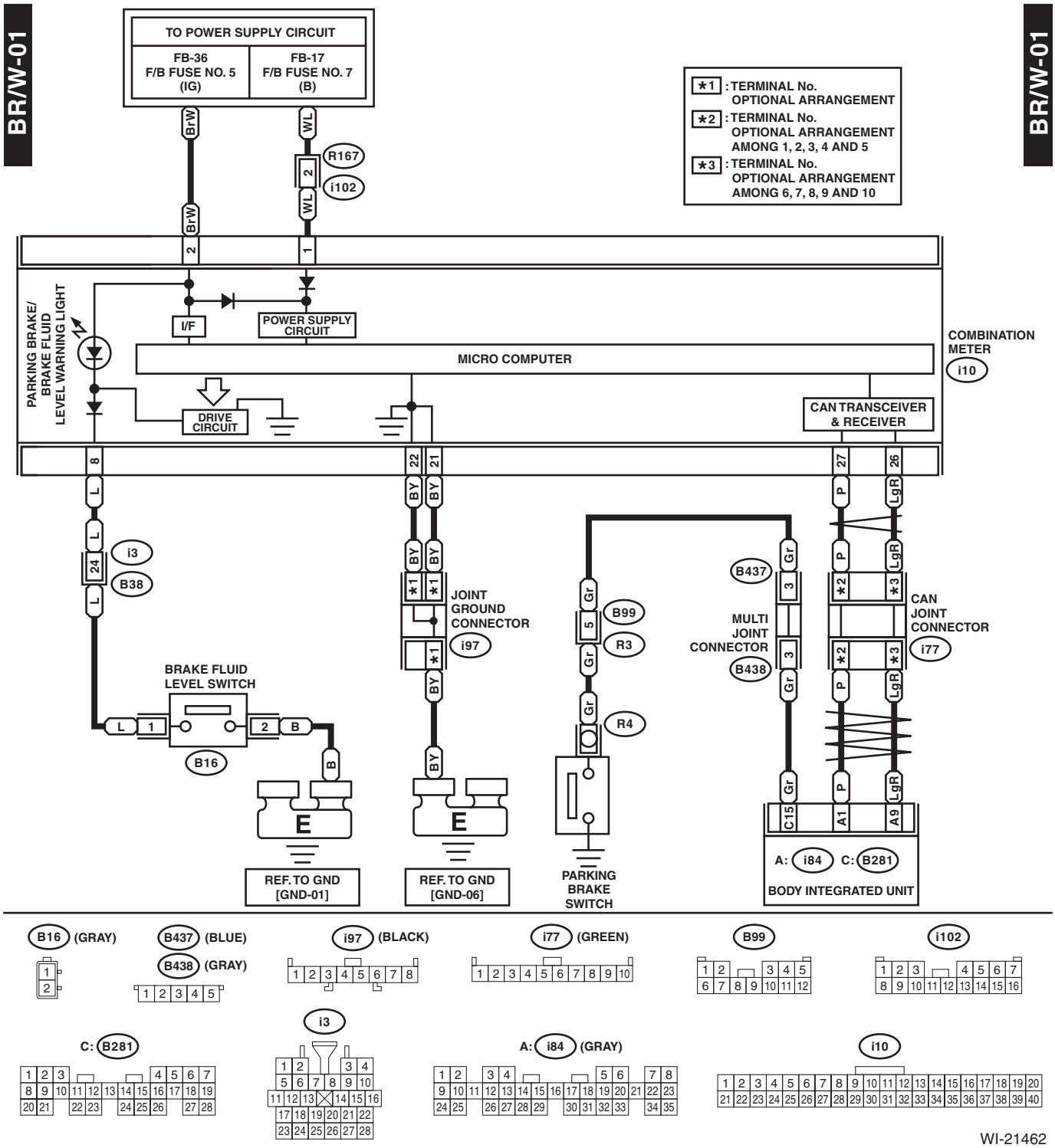

45.Sunroof Control System

A: WIRING DIAGRAM

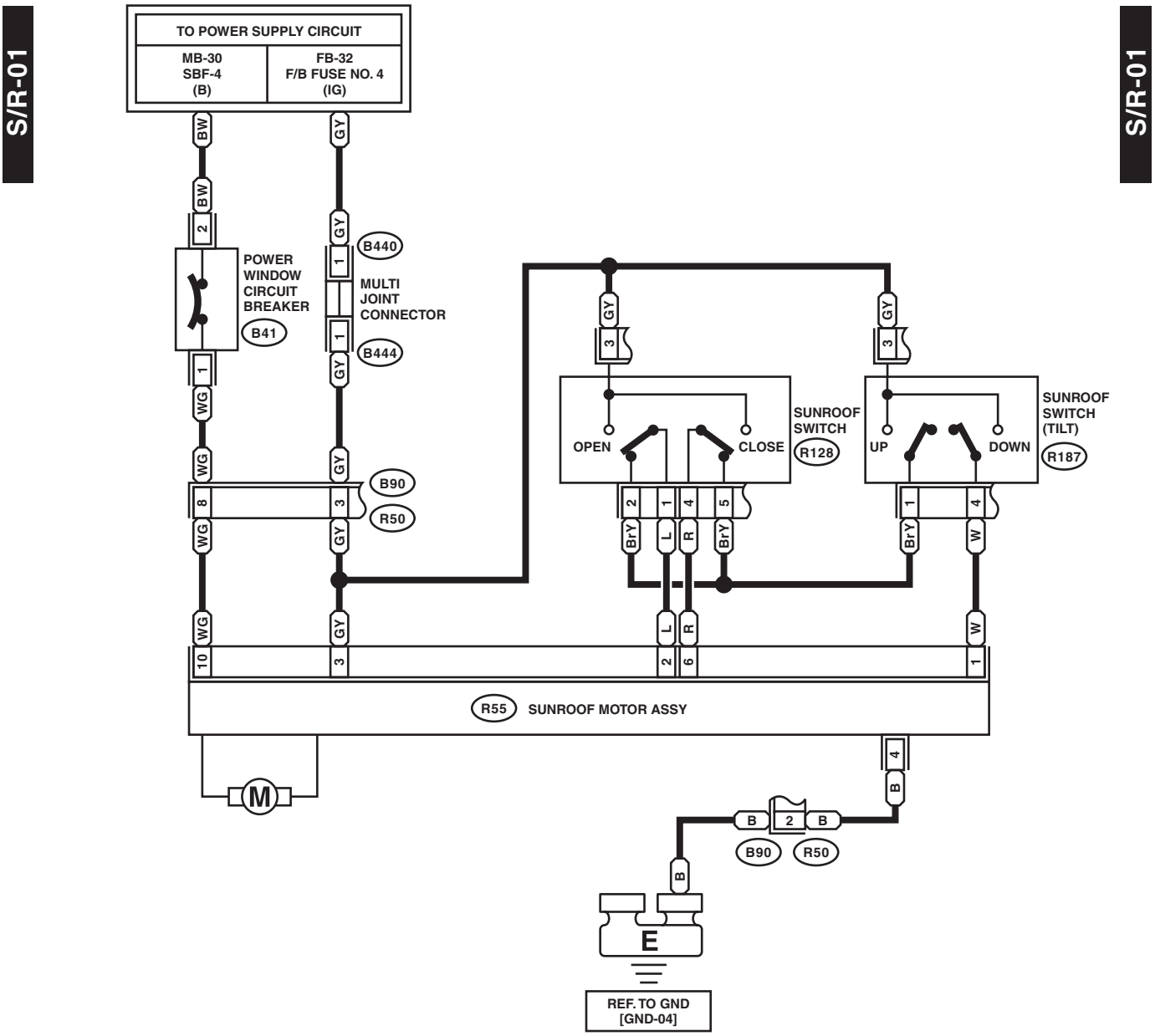

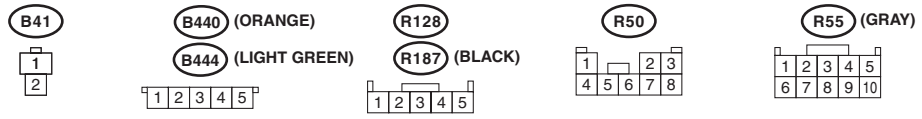

WI-21463

46.Security System

A: WIRING DIAGRAM

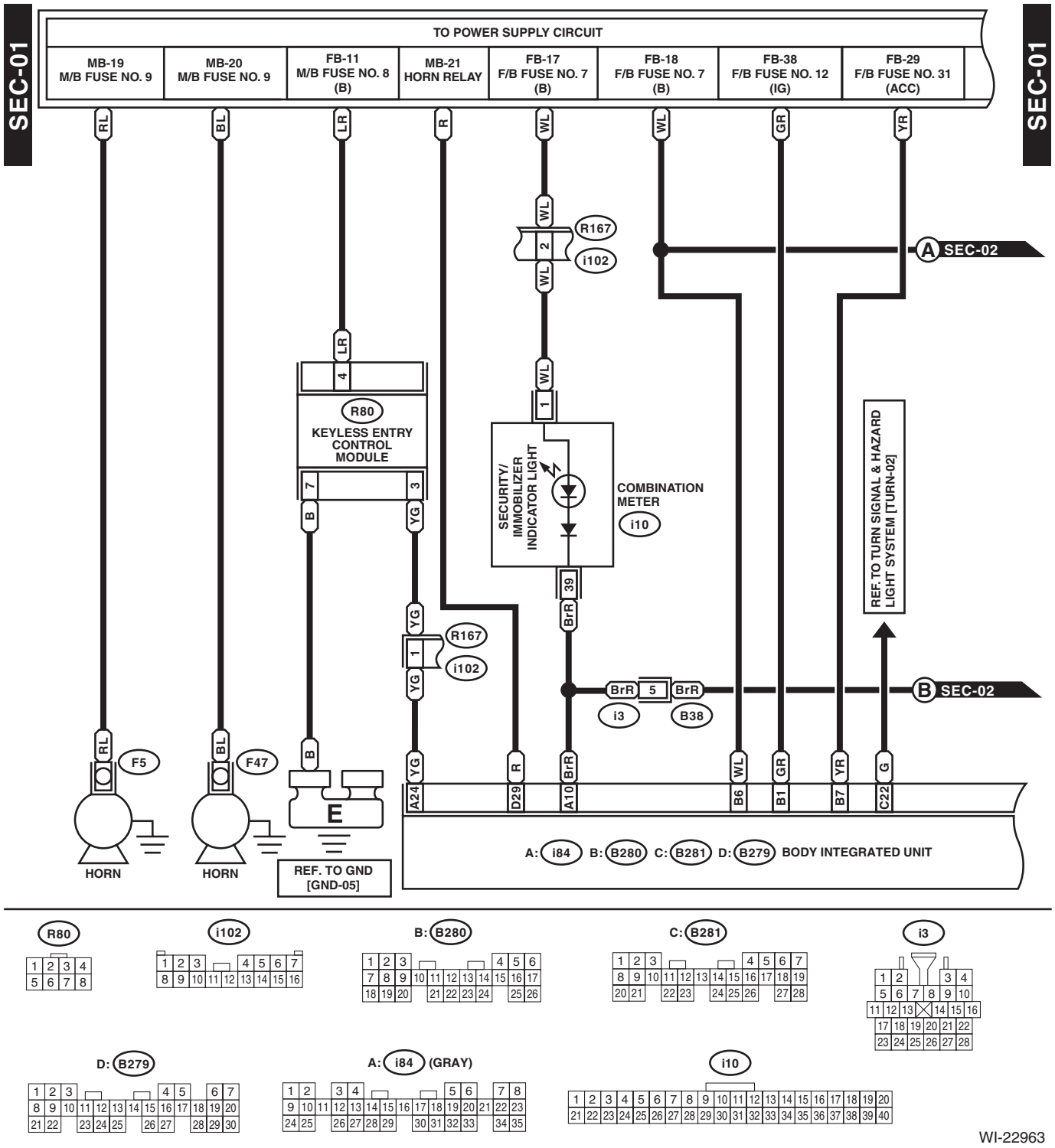

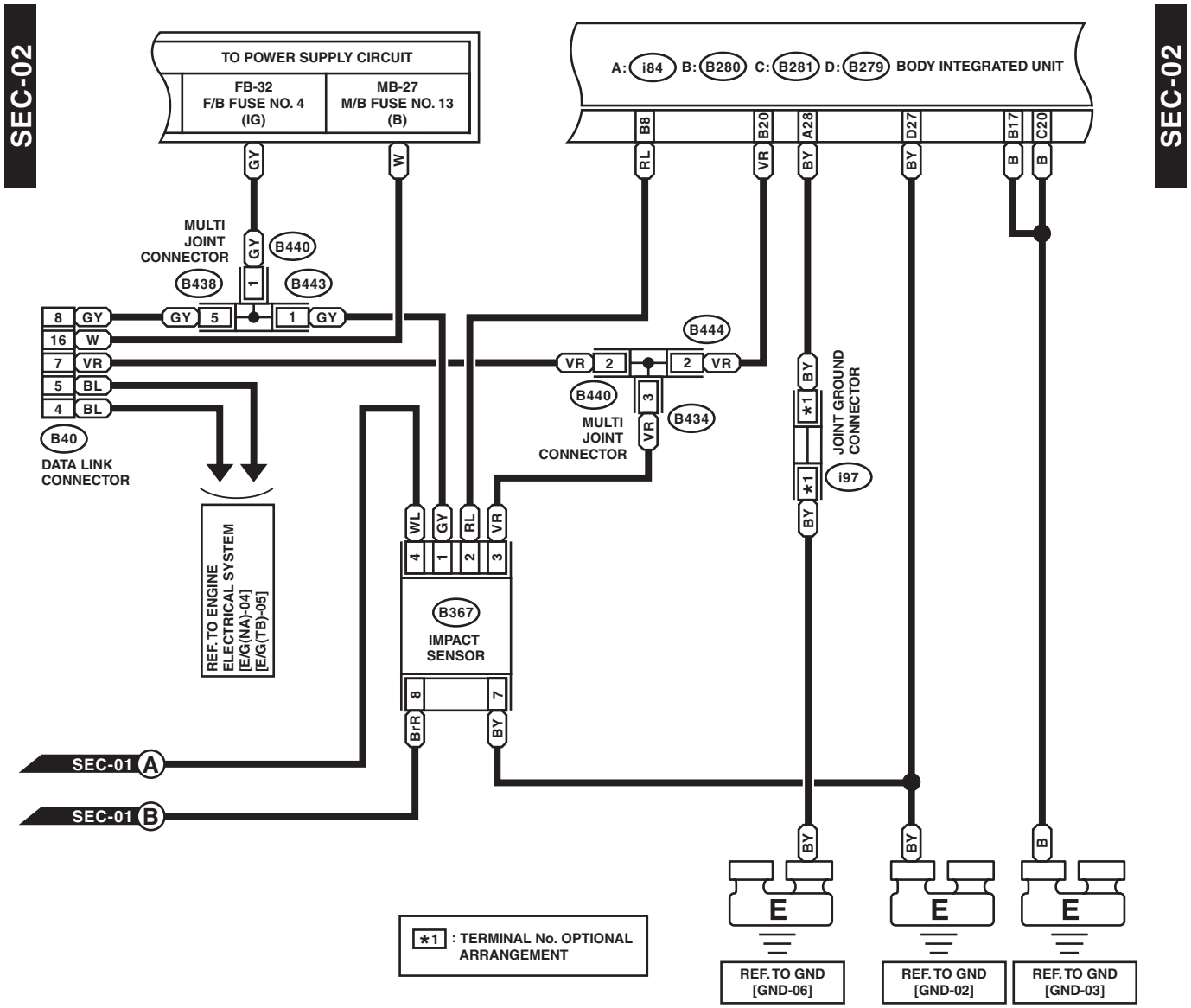
SEC-02
TO POWER SUPPLY CIRCUIT
FB-32
F/B FUSE NO. 4
(IG)
MB-27
M/B FUSE NO. 13
(B)
A: i84 B: B280 C: B281 D: B279 BODY INTEGRATED UNIT
MULTI JOINT CONNECTOR
B438
B440
B443
B444
B434
B40
DATA LINK CONNECTOR
REF. TO ENGINE ELECTRICAL SYSTEM [E/G(NA)-04] [E/G(TB)-05]
B367
IMPACT SENSOR
JOINT GROUND CONNECTOR
i97
SEC-01 A
SEC-01 B
*1 : TERMINAL No. OPTIONAL ARRANGEMENT
REF. TO GND [GND-06]
REF. TO GND [GND-02]
REF. TO GND [GND-03]

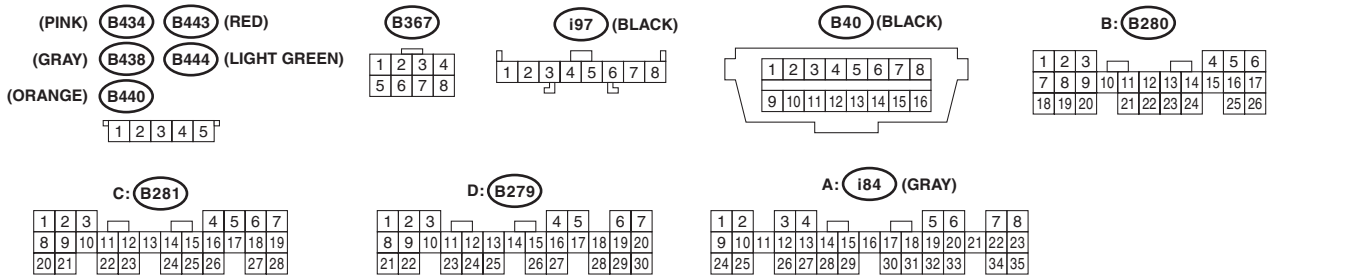
(PINK) B434 B443 (RED)
(GRAY) B438 B444 (LIGHT GREEN)
(ORANGE) B440
B367
i97 (BLACK)
B40 (BLACK)
B: B280
C: B281
D: B279
A: i84 (GRAY)

WI-21464

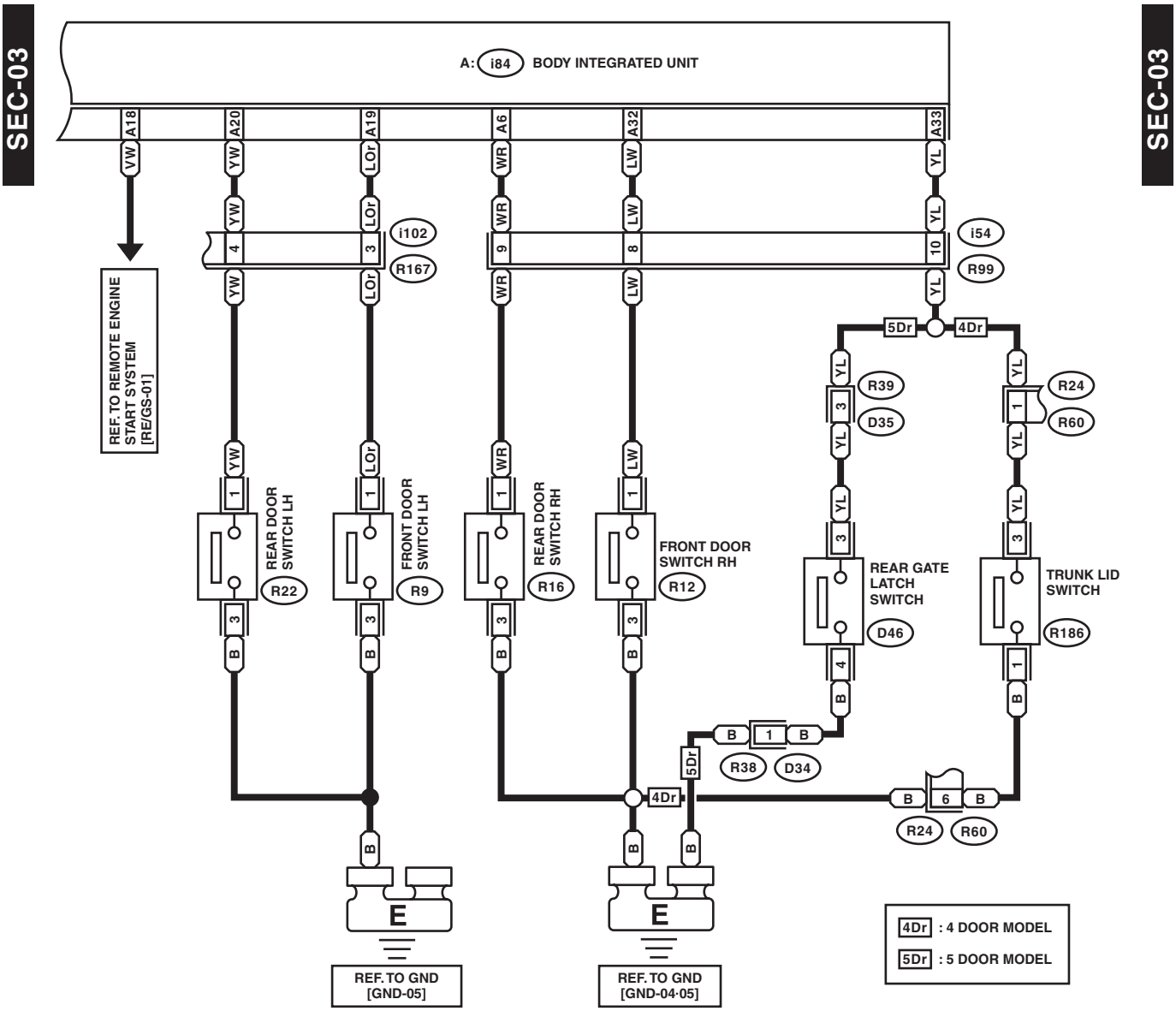
SEC-03
A: i84 BODY INTEGRATED UNIT
A18
A20
A19
A6
A32
A33
VW
YW
LOr
WR
LW
YL
i102
R167
i54
R99
REF. TO REMOTE ENGINE START SYSTEM [RE/GS-01]
5Dr
4Dr
R39
D35
R24
R60
REAR DOOR SWITCH LH
R22
FRONT DOOR SWITCH LH
R9
REAR DOOR SWITCH RH
R16
FRONT DOOR SWITCH RH
R12
REAR GATE LATCH SWITCH
D46
TRUNK LID SWITCH
R186
R38
D34
B
E
REF. TO GND [GND-05]
REF. TO GND [GND-04·05]
4Dr : 4 DOOR MODEL
5Dr : 5 DOOR MODEL

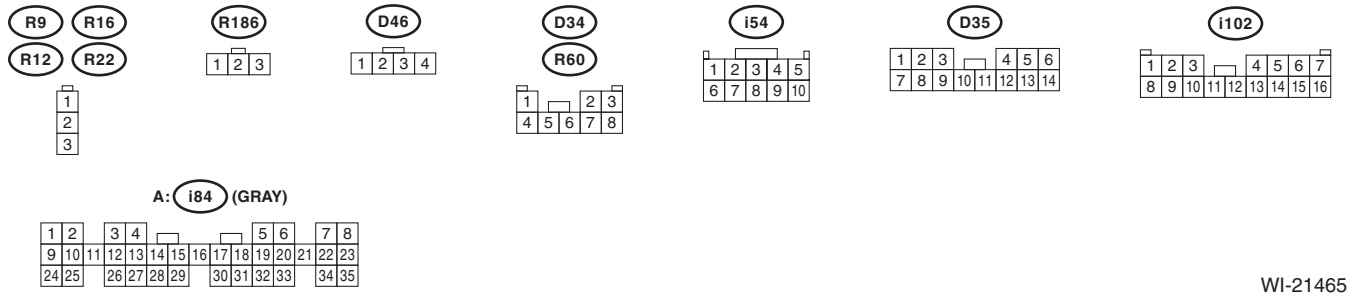
R9
R16
R12
R22
R186
D46
D34
R60
i54
D35
i102
A: i84 (GRAY)

WI-21465

47.Immobilizer System

A: WIRING DIAGRAM

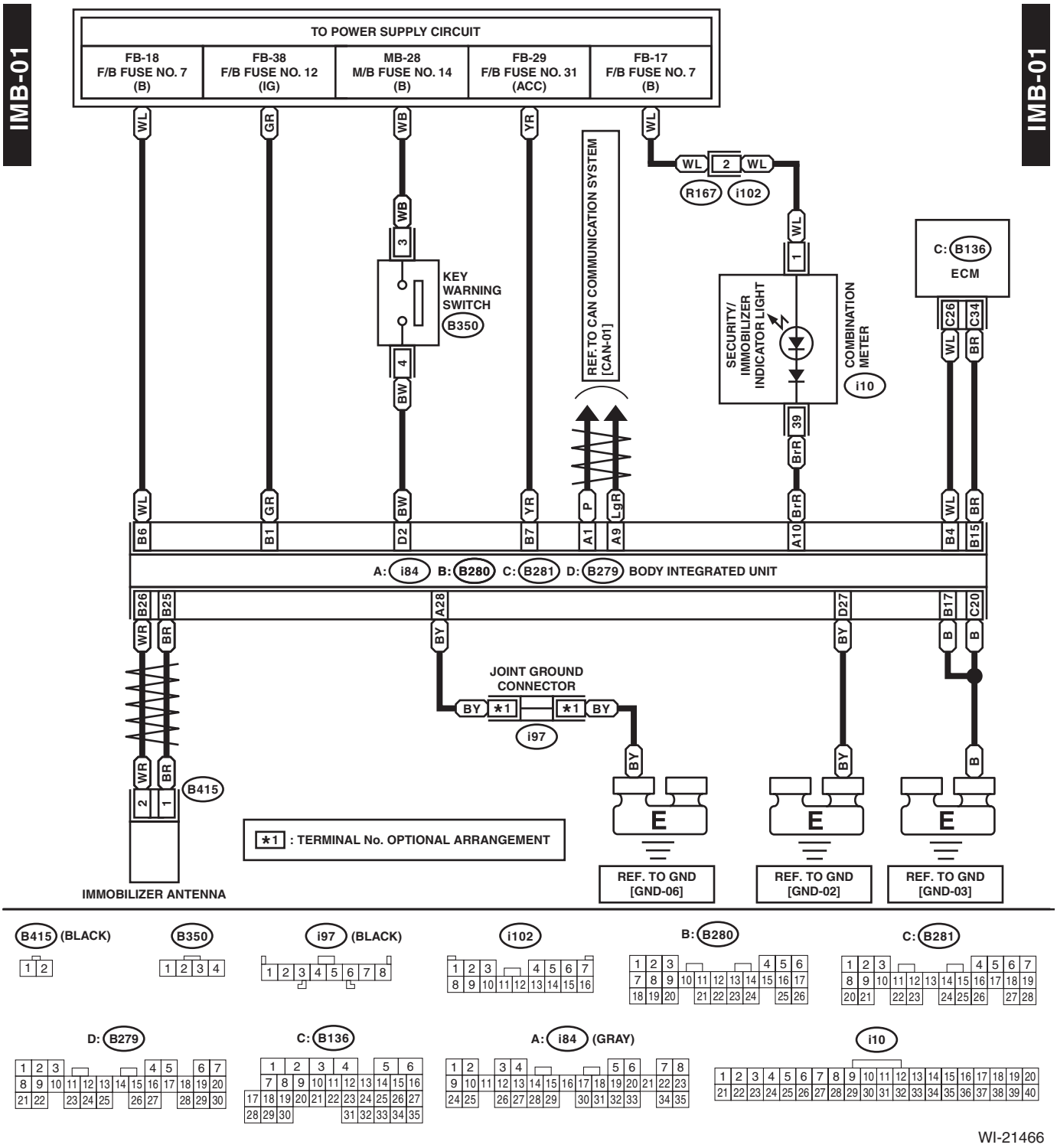

48.Keyless Entry System

A: WIRING DIAGRAM

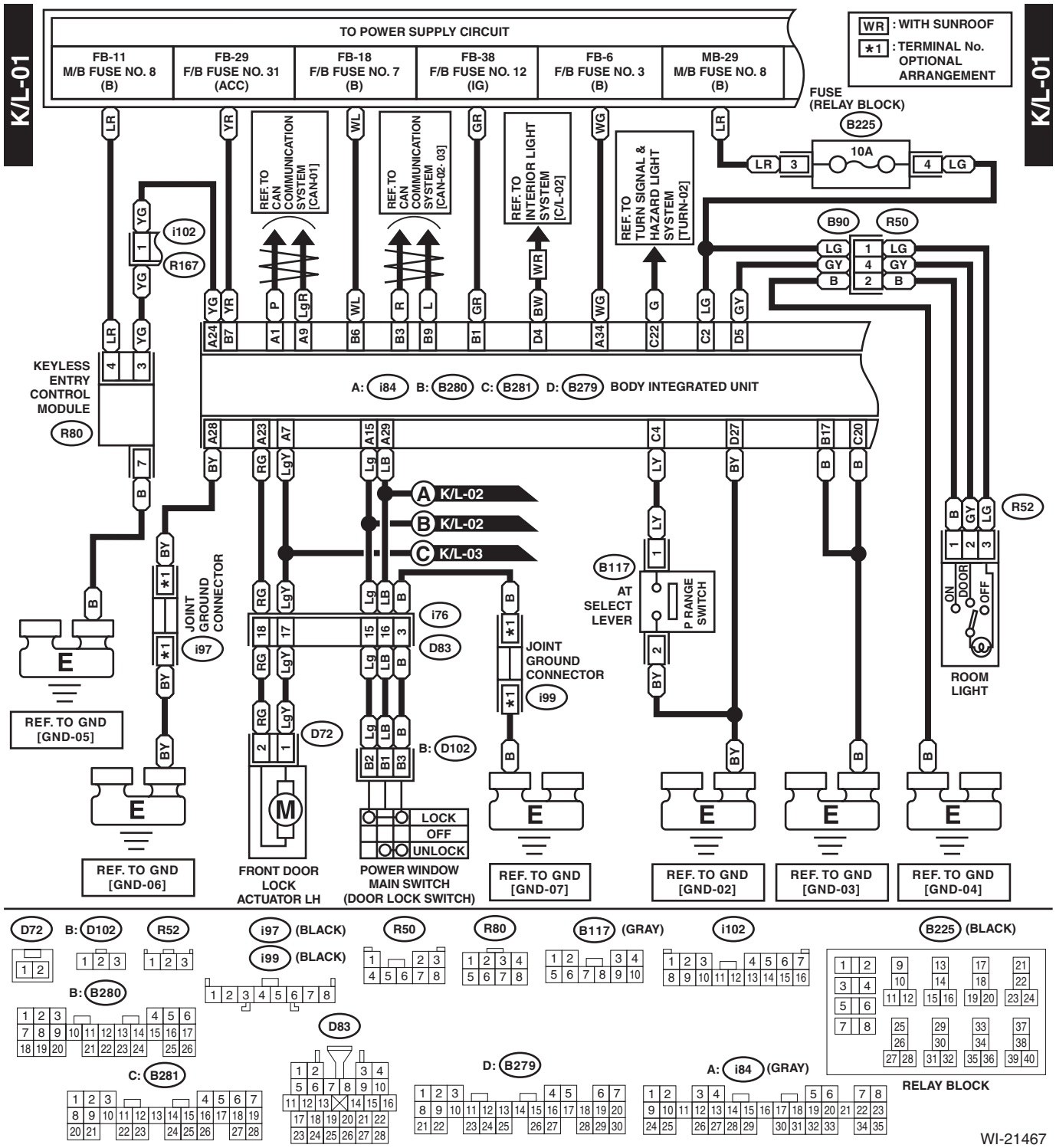

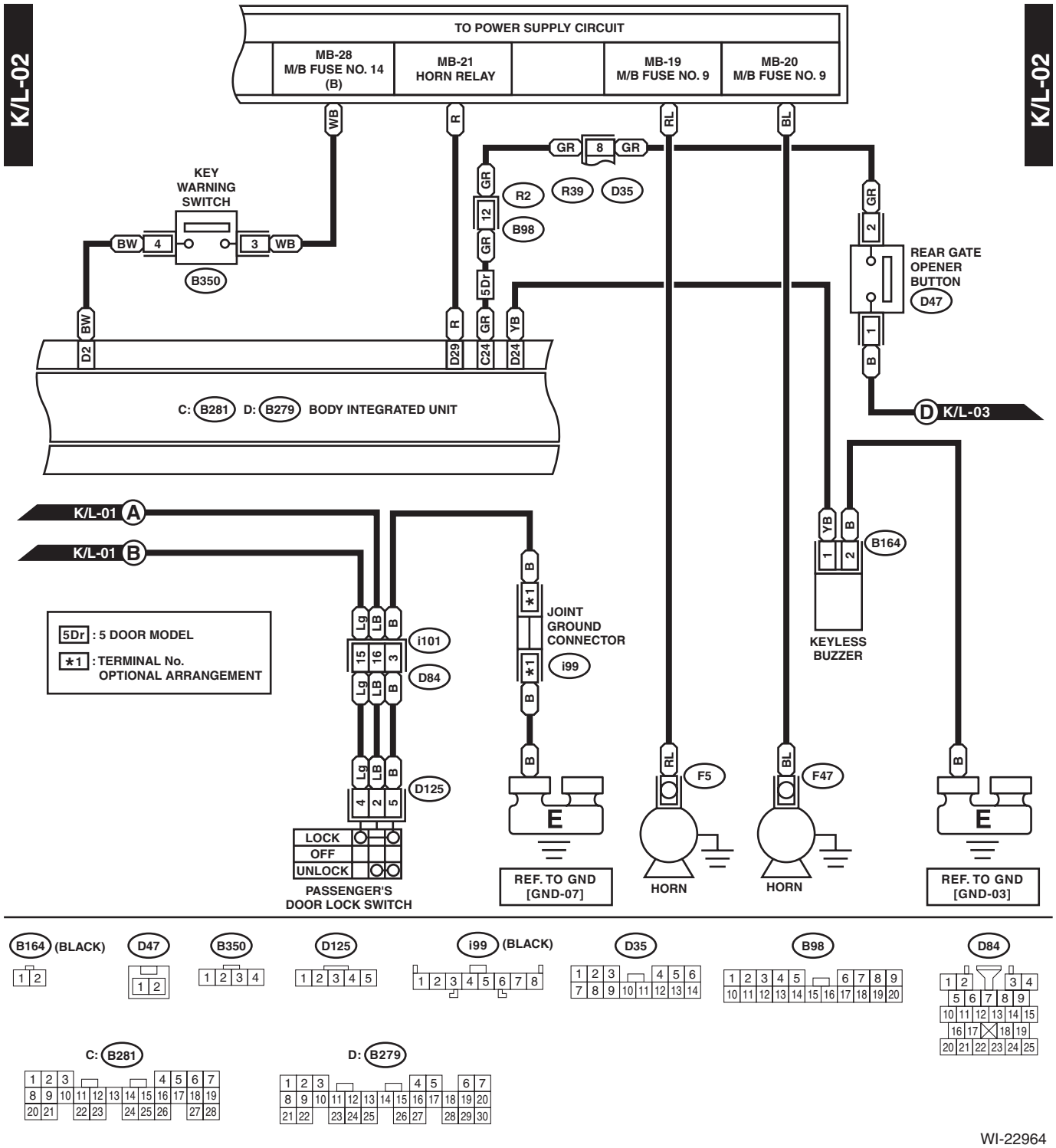
K/L-02
TO POWER SUPPLY CIRCUIT
MB-28 M/B FUSE NO. 14 (B)
MB-21 HORN RELAY
MB-19 M/B FUSE NO. 9
MB-20 M/B FUSE NO. 9
KEY WARNING SWITCH
B350
BW
WB
R
RL
BL
GR
R2
R39
D35
B98
5Dr
YB
D2
D29
C24
D24
C: B281 D: B279 BODY INTEGRATED UNIT
REAR GATE OPENER BUTTON
D47
D K/L-03
K/L-01 A
K/L-01 B
5Dr : 5 DOOR MODEL
*1 : TERMINAL No. OPTIONAL ARRANGEMENT
Lg
LB
i101
D84
D125
JOINT GROUND CONNECTOR
i99
B164
KEYLESS BUZZER
LOCK
OFF
UNLOCK
PASSENGER'S DOOR LOCK SWITCH
REF. TO GND [GND-07]
HORN
F5
F47
REF. TO GND [GND-03]
B164 (BLACK)
D47
B350
D125
i99 (BLACK)
D35
B98
D84
C: B281
D: B279
WI-22964

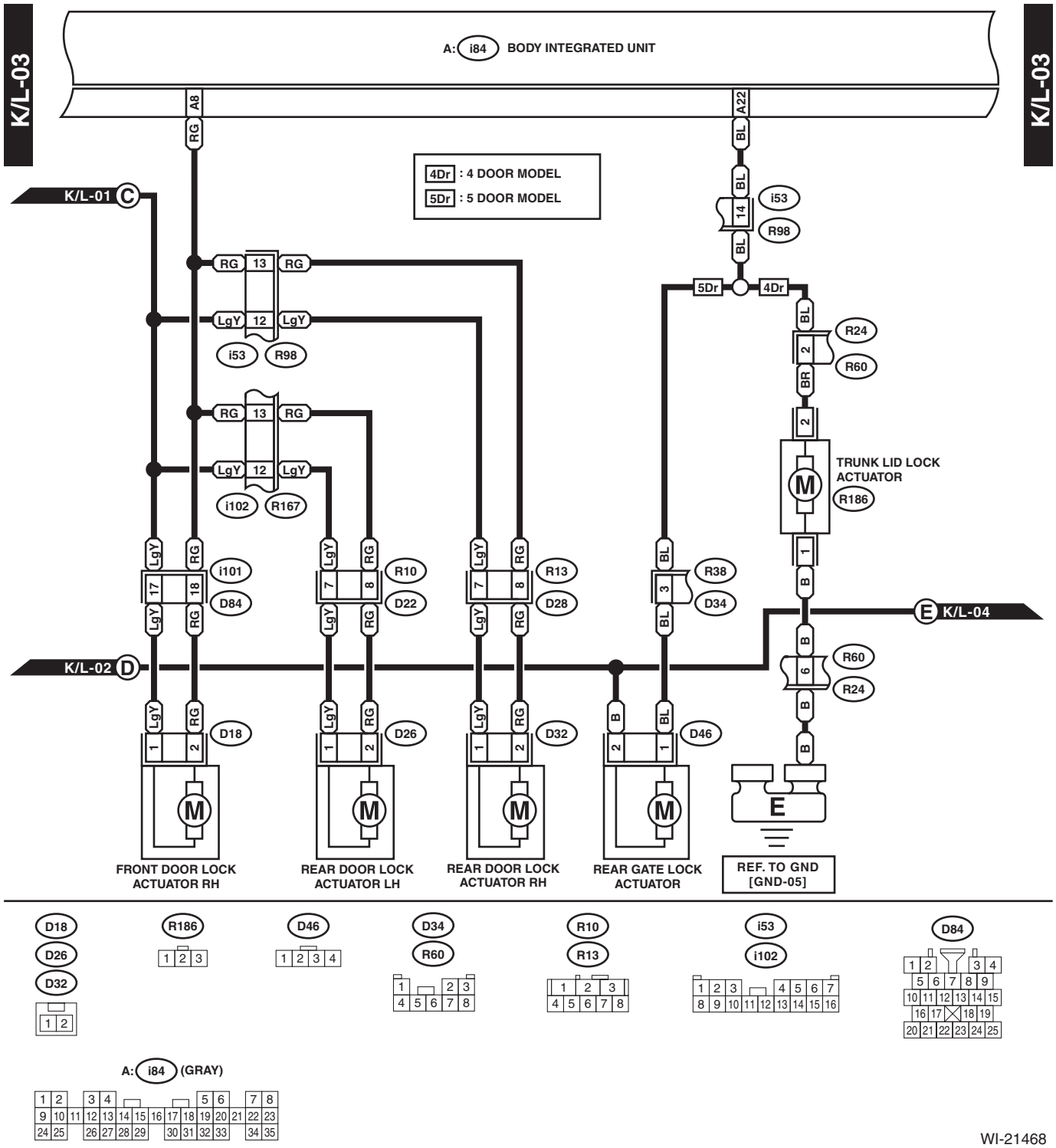
K/L-03
A: i84 BODY INTEGRATED UNIT
A8
A22
RG
BL
4Dr : 4 DOOR MODEL
5Dr : 5 DOOR MODEL
K/L-01 C
i53
R98
13
12
LgY
i102
R167
5Dr
4Dr
R24
R60
BR
TRUNK LID LOCK ACTUATOR
R186
i101
D84
R10
D22
R13
D28
R38
D34
E K/L-04
K/L-02 D
D18
D26
D32
D46
FRONT DOOR LOCK ACTUATOR RH
REAR DOOR LOCK ACTUATOR LH
REAR DOOR LOCK ACTUATOR RH
REAR GATE LOCK ACTUATOR
REF. TO GND [GND-05]

D18
D26
D32
R186
D46
D34
R60
R10
R13
i53
i102
D84

A: i84 (GRAY)

WI-21468

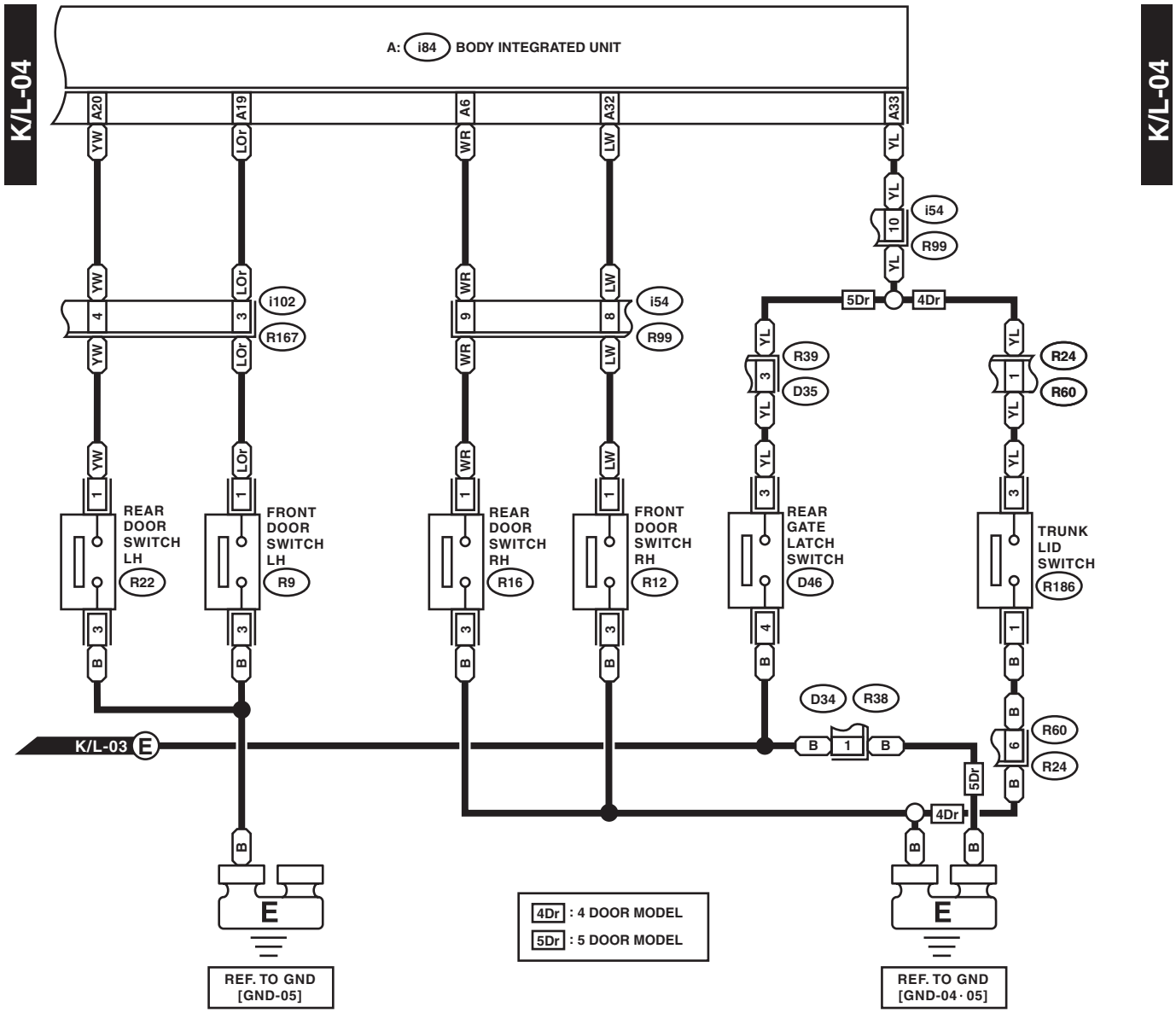
K/L-04
A: i84 BODY INTEGRATED UNIT
A20
A19
A6
A32
A33
YW
LOr
WR
LW
YL
i54
R99
i102
R167
5Dr
4Dr
R39
D35
R24
R60
REAR DOOR SWITCH LH
R22
FRONT DOOR SWITCH LH
R9
REAR DOOR SWITCH RH
R16
FRONT DOOR SWITCH RH
R12
REAR GATE LATCH SWITCH
D46
TRUNK LID SWITCH
R186
D34
R38
K/L-03 E
B
E
REF. TO GND [GND-05]
REF. TO GND [GND-04 · 05]
4Dr : 4 DOOR MODEL
5Dr : 5 DOOR MODEL

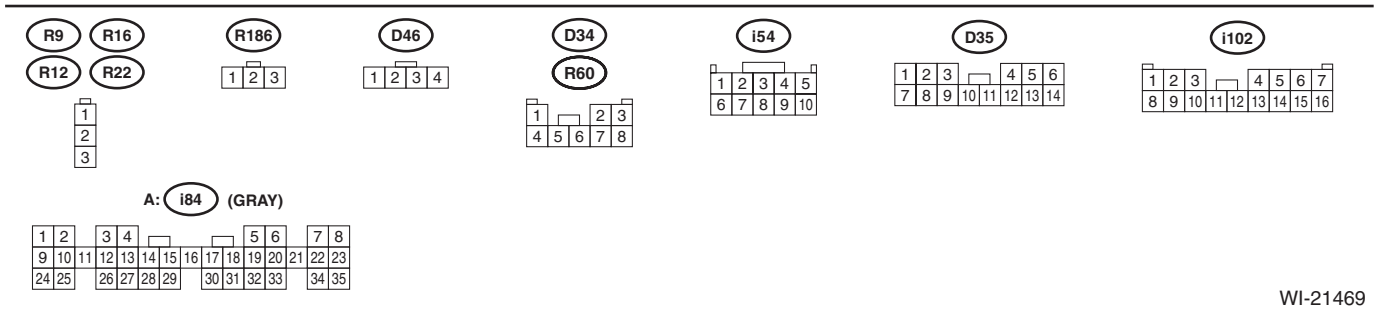
R9
R16
R12
R22
R186
D46
D34
R60
i54
D35
i102
A: i84 (GRAY)

WI-21469

49.Cruise Control System

A: WIRING DIAGRAM

1. NON-TURBO MODEL

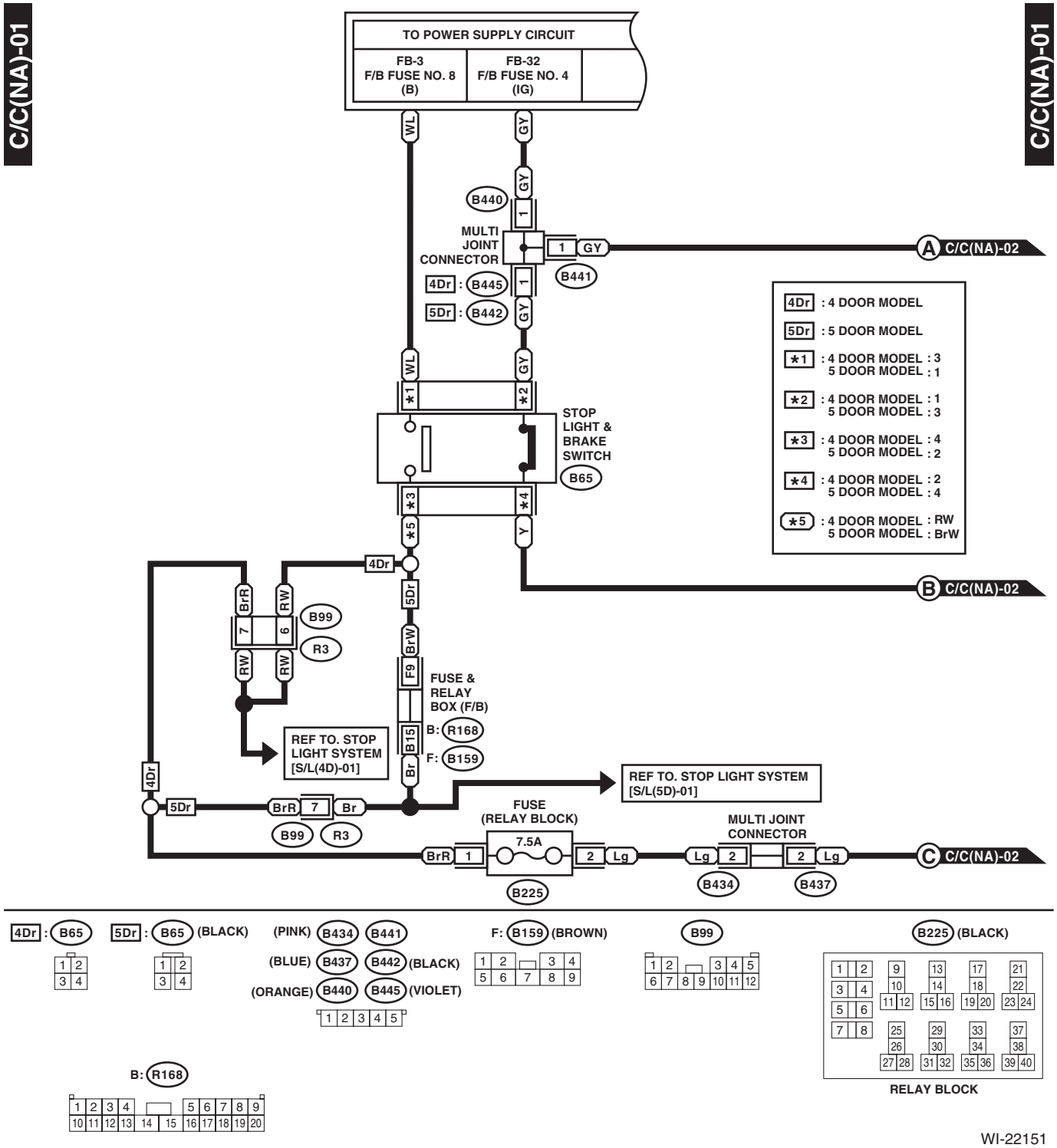

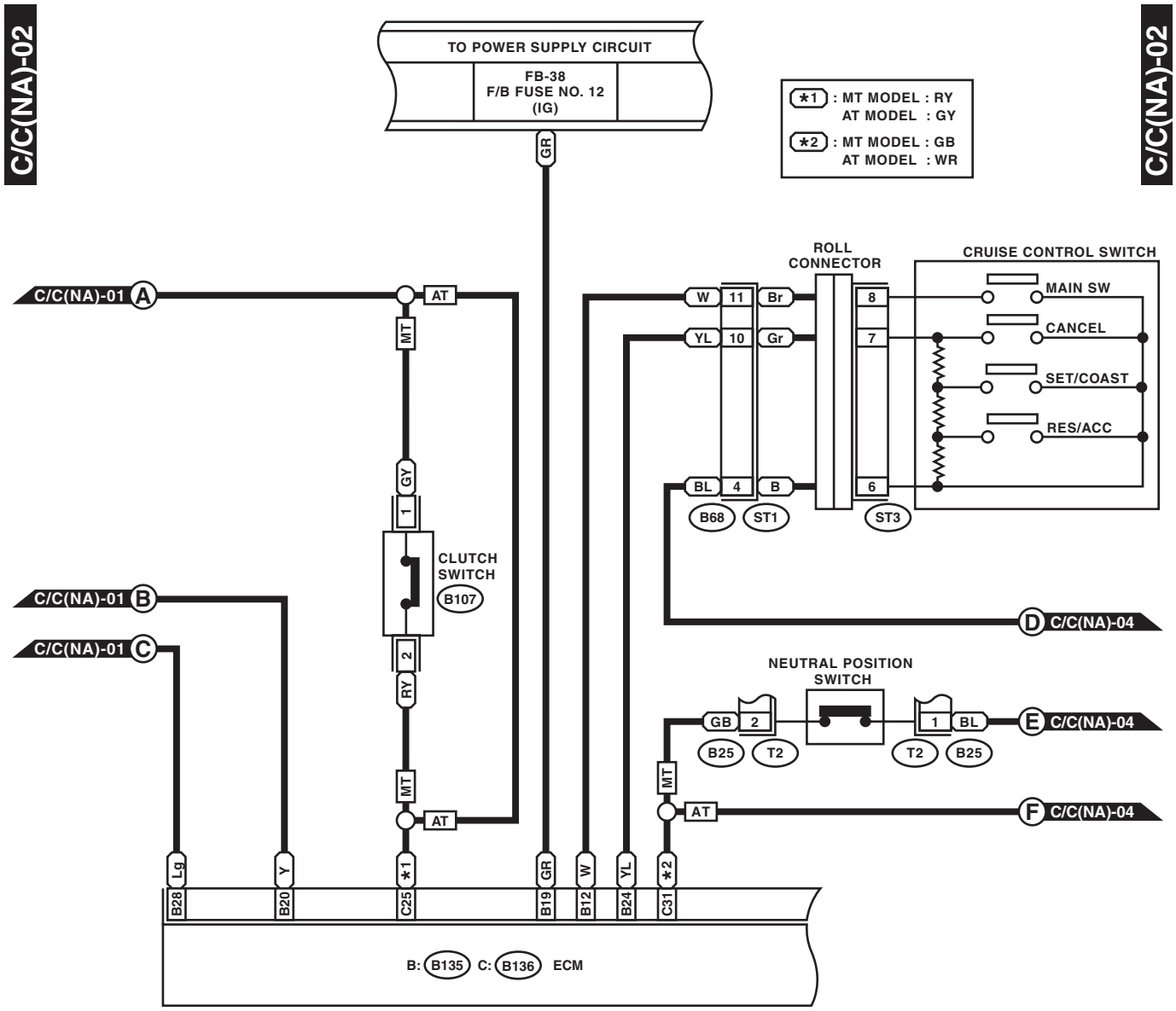
C/C(NA)-02
TO POWER SUPPLY CIRCUIT
FB-38
F/B FUSE NO. 12
(IG)
GR
*1 : MT MODEL : RY
AT MODEL : GY
*2 : MT MODEL : GB
AT MODEL : WR
C/C(NA)-02
ROLL CONNECTOR
CRUISE CONTROL SWITCH
MAIN SW
CANCEL
SET/COAST
RES/ACC
C/C(NA)-01 A
AT
MT
W 11 Br 8
YL 10 Gr 7
BL 4 B 6
B68 ST1 ST3
GY
1
CLUTCH SWITCH
B107
C/C(NA)-01 B
C/C(NA)-01 C
2
RY
D C/C(NA)-04
NEUTRAL POSITION SWITCH
GB 2 1 BL
B25 T2 T2 B25
E C/C(NA)-04
MT
AT
F C/C(NA)-04
Lg Y *1 GR W YL *2
B28 B20 C25 B19 B12 B24 C31
B: B135 C: B136 ECM

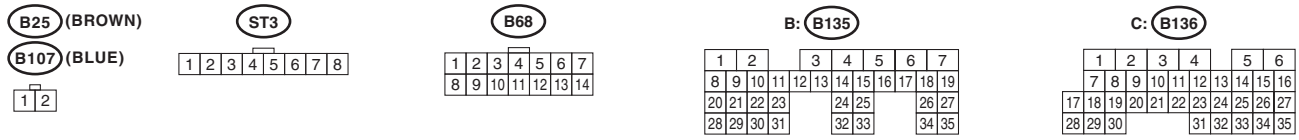
B25 (BROWN)
B107 (BLUE)
ST3
B68
B: B135
C: B136

WI-16994

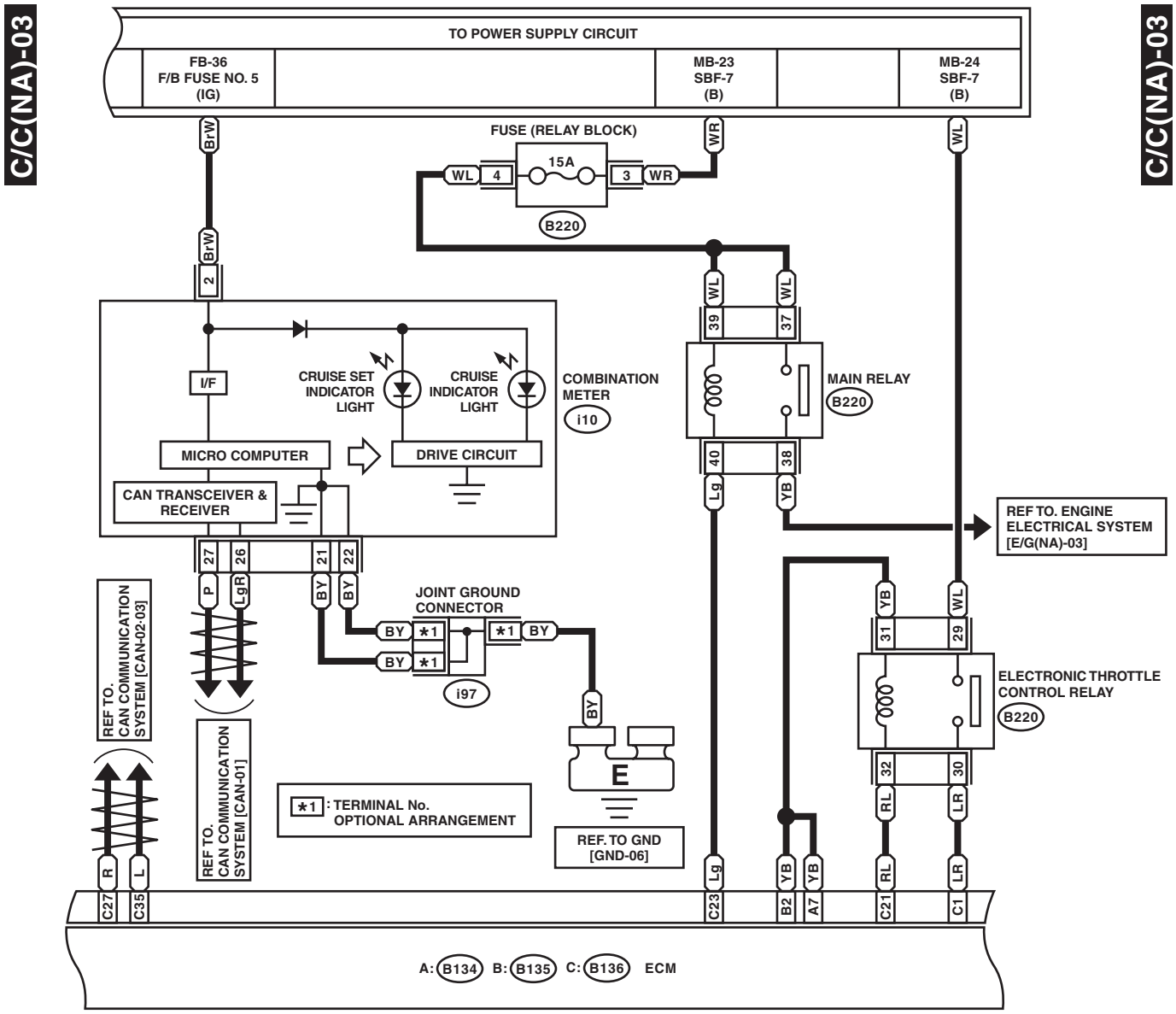
C/C(NA)-03
TO POWER SUPPLY CIRCUIT
FB-36
F/B FUSE NO. 5
(IG)
MB-23
SBF-7
(B)
MB-24
SBF-7
(B)
FUSE (RELAY BLOCK)
15A
B220
COMBINATION METER
i10
I/F
CRUISE SET INDICATOR LIGHT
CRUISE INDICATOR LIGHT
MICRO COMPUTER
DRIVE CIRCUIT
CAN TRANSCEIVER & RECEIVER
MAIN RELAY
REF TO. ENGINE ELECTRICAL SYSTEM [E/G(NA)-03]
JOINT GROUND CONNECTOR
i97
ELECTRONIC THROTTLE CONTROL RELAY
REF TO. CAN COMMUNICATION SYSTEM [CAN-02-03]
REF TO. CAN COMMUNICATION SYSTEM [CAN-01]
*1 : TERMINAL No. OPTIONAL ARRANGEMENT
REF. TO GND [GND-06]
A: B134 B: B135 C: B136 ECM

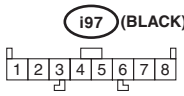
i97 (BLACK)

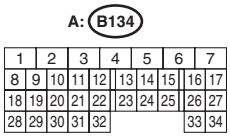
A: B134

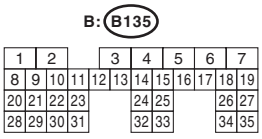
B: B135

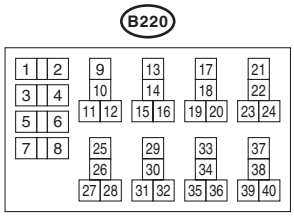
B220
RELAY BLOCK

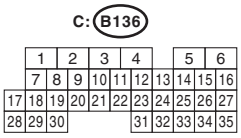
C: B136

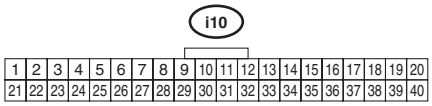
i10

WI-22965

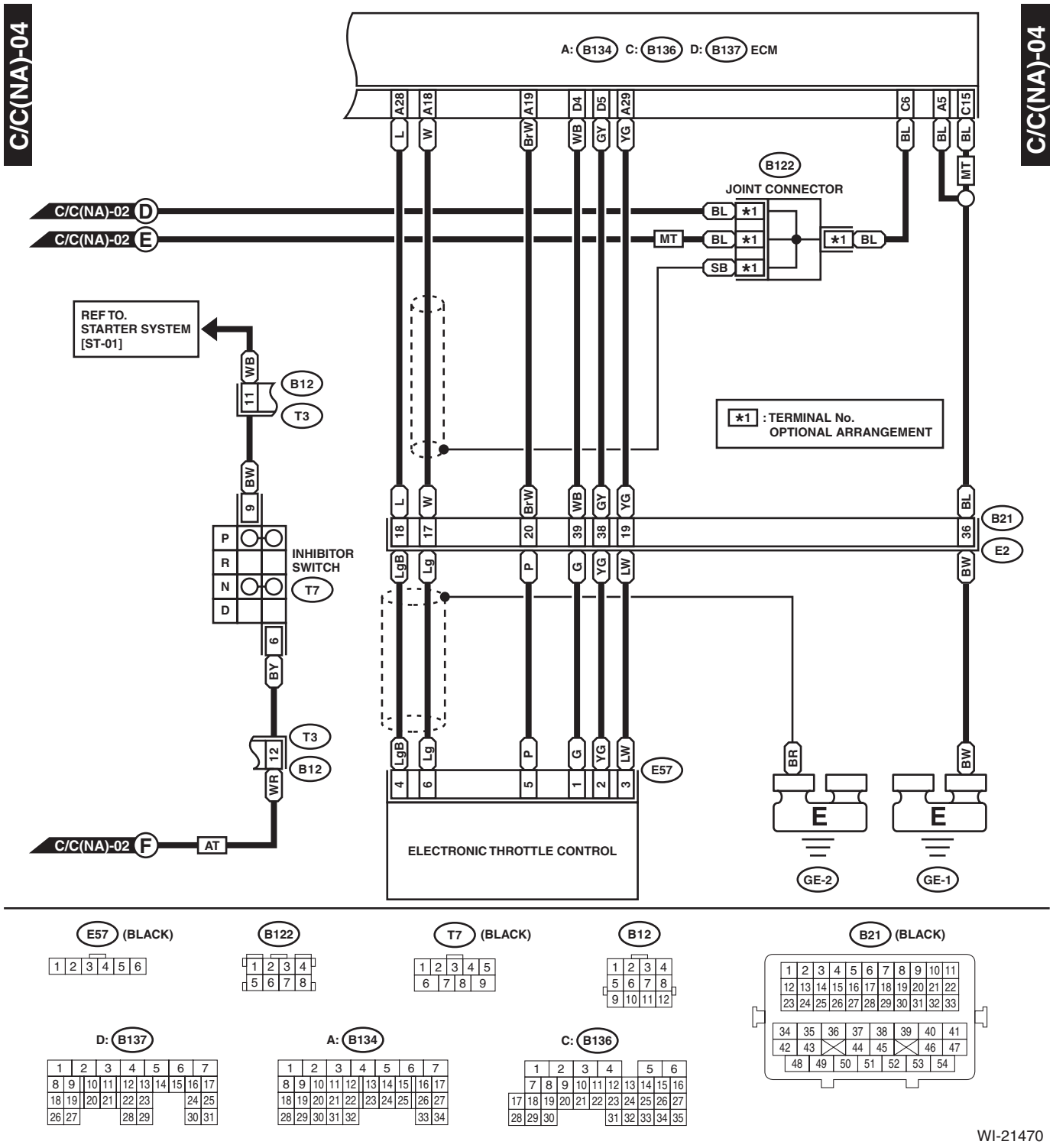
C/C(NA)-04
A: B134 C: B136 D: B137 ECM
A28 A18 A19 D4 D5 A29 C6 A5 C15
L W Br·W WB GY YG BL BL BL
MT
B122
JOINT CONNECTOR
C/C(NA)-02 D
C/C(NA)-02 E
BL *1
MT BL *1
SB *1
*1 BL
REF TO.
STARTER SYSTEM
[ST-01]
WB
11
B12
T3
*1 : TERMINAL No.
OPTIONAL ARRANGEMENT
BW
9
P
R
N
D
INHIBITOR
SWITCH
T7
6
BY
T3
12
B12
WR
C/C(NA)-02 F
AT
L W Br·W WB GY YG BL
18 17 20 39 38 19 36
B21
E2
LgB Lg P G YG LW BW
LgB Lg P G YG LW
4 6 5 1 2 3
E57
BR
BW
E
E
GE-2
GE-1
ELECTRONIC THROTTLE CONTROL
E57 (BLACK)
B122
T7 (BLACK)
B12
B21 (BLACK)
D: B137
A: B134
C: B136

WI-21470

2. TURBO MODEL

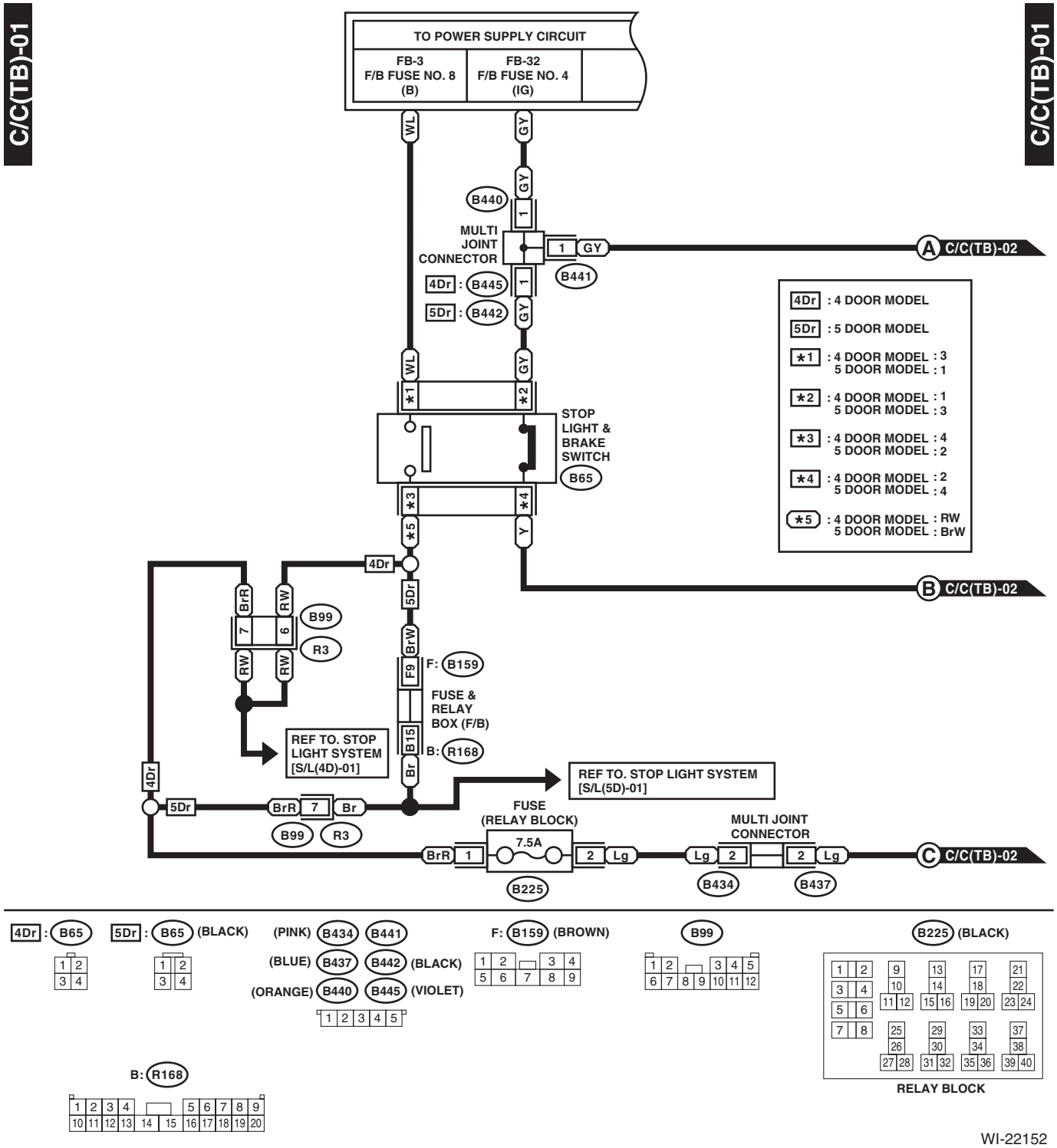

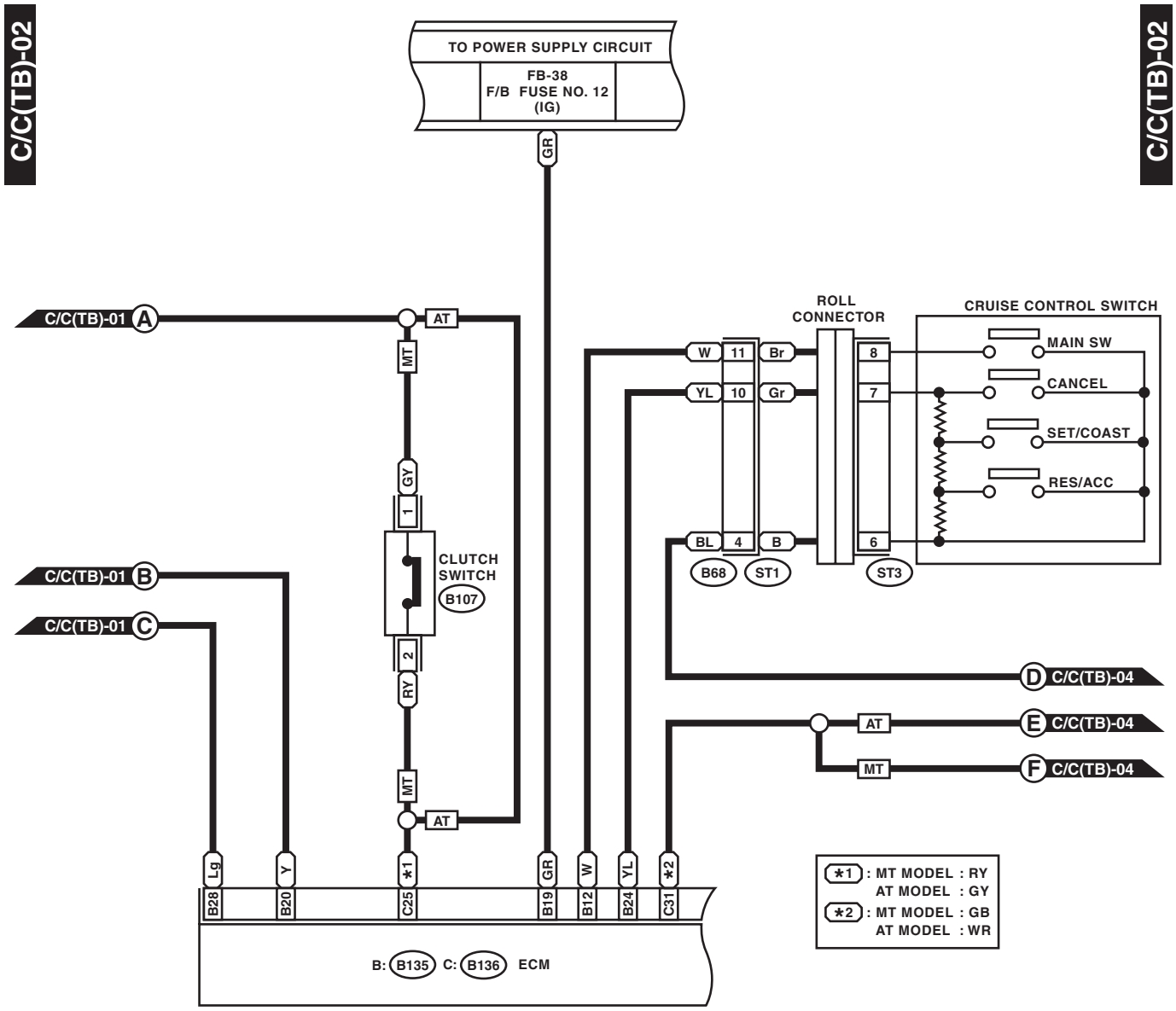
C/C(TB)-02
C/C(TB)-02
TO POWER SUPPLY CIRCUIT
FB-38
F/B FUSE NO. 12
(IG)
GR
C/C(TB)-01 A
C/C(TB)-01 B
C/C(TB)-01 C
AT
MT
GY
1
CLUTCH
SWITCH
B107
2
RY
MT
AT
ROLL
CONNECTOR
CRUISE CONTROL SWITCH
MAIN SW
CANCEL
SET/COAST
RES/ACC
W 11 Br
YL 10 Gr
BL 4 B
8
7
6
B68
ST1
ST3
D C/C(TB)-04
E C/C(TB)-04
F C/C(TB)-04
AT
MT
Lg
Y
*1
GR
W
YL
*2
B28
B20
C25
B19
B12
B24
C31
B: B135 C: B136 ECM
*1 : MT MODEL : RY
AT MODEL : GY
*2 : MT MODEL : GB
AT MODEL : WR

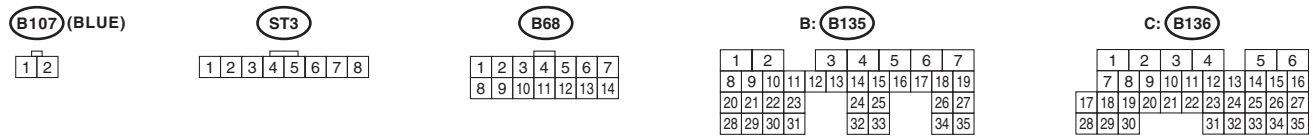
B107 (BLUE)
ST3
B68
B: B135
C: B136

WI-16998

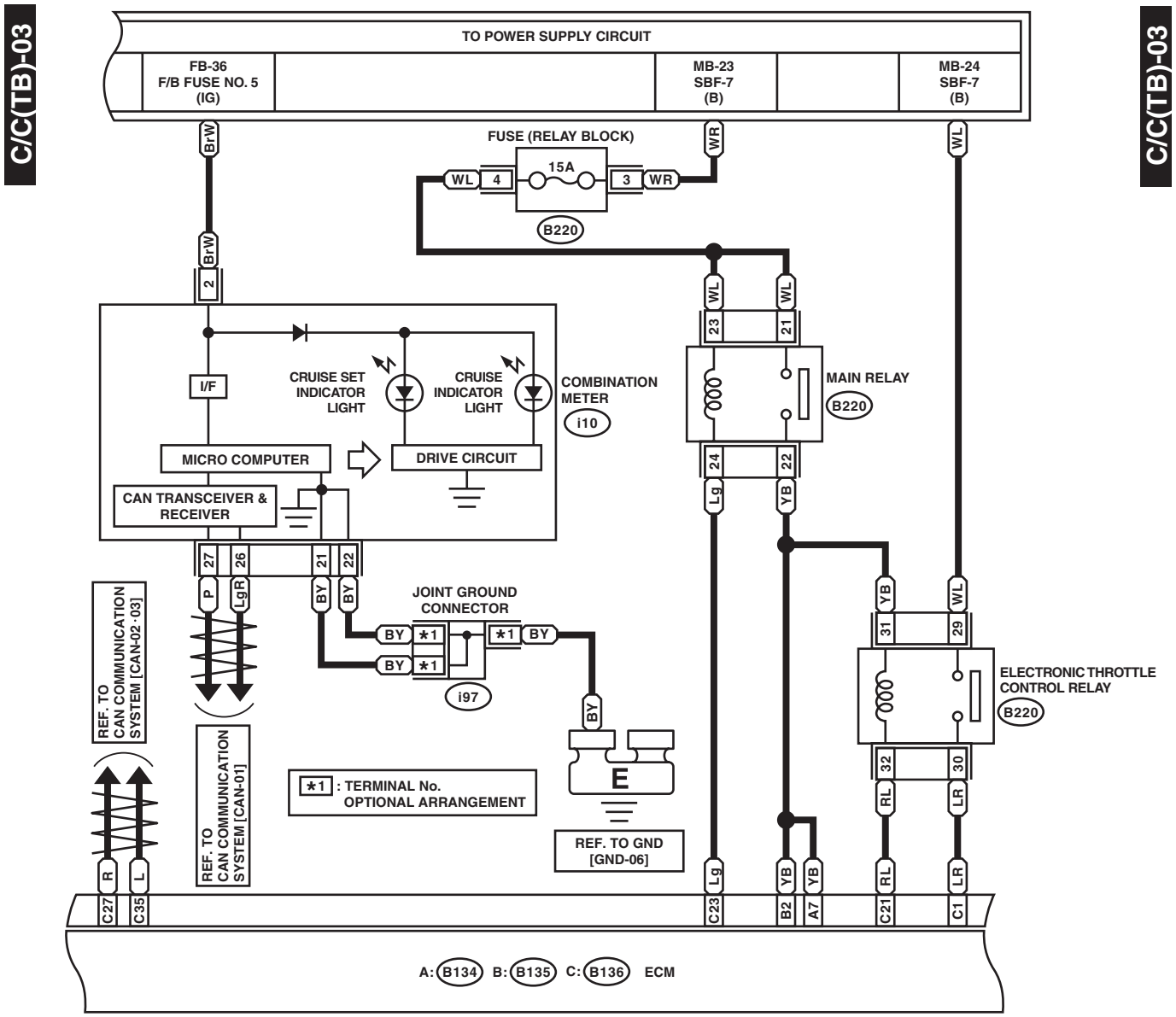
C/C(TB)-03
TO POWER SUPPLY CIRCUIT
FB-36
F/B FUSE NO. 5
(IG)
MB-23
SBF-7
(B)
MB-24
SBF-7
(B)
FUSE (RELAY BLOCK)
15A
B220
I/F
CRUISE SET INDICATOR LIGHT
CRUISE INDICATOR LIGHT
COMBINATION METER
i10
MICRO COMPUTER
DRIVE CIRCUIT
CAN TRANSCEIVER & RECEIVER
MAIN RELAY
JOINT GROUND CONNECTOR
i97
ELECTRONIC THROTTLE CONTROL RELAY
REF. TO CAN COMMUNICATION SYSTEM [CAN-02·03]
REF. TO CAN COMMUNICATION SYSTEM [CAN-01]
*1 : TERMINAL No. OPTIONAL ARRANGEMENT
REF. TO GND [GND-06]
A: B134 B: B135 C: B136 ECM

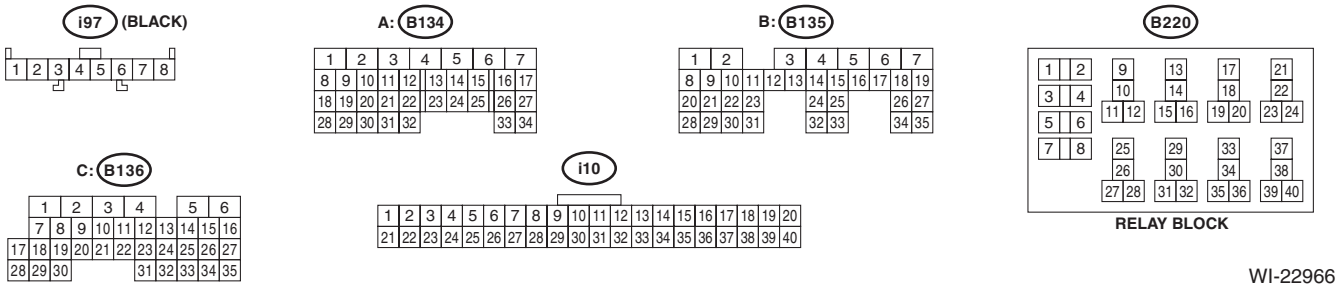
i97 (BLACK)
A: B134
B: B135
B220
C: B136
i10
RELAY BLOCK

WI-22966

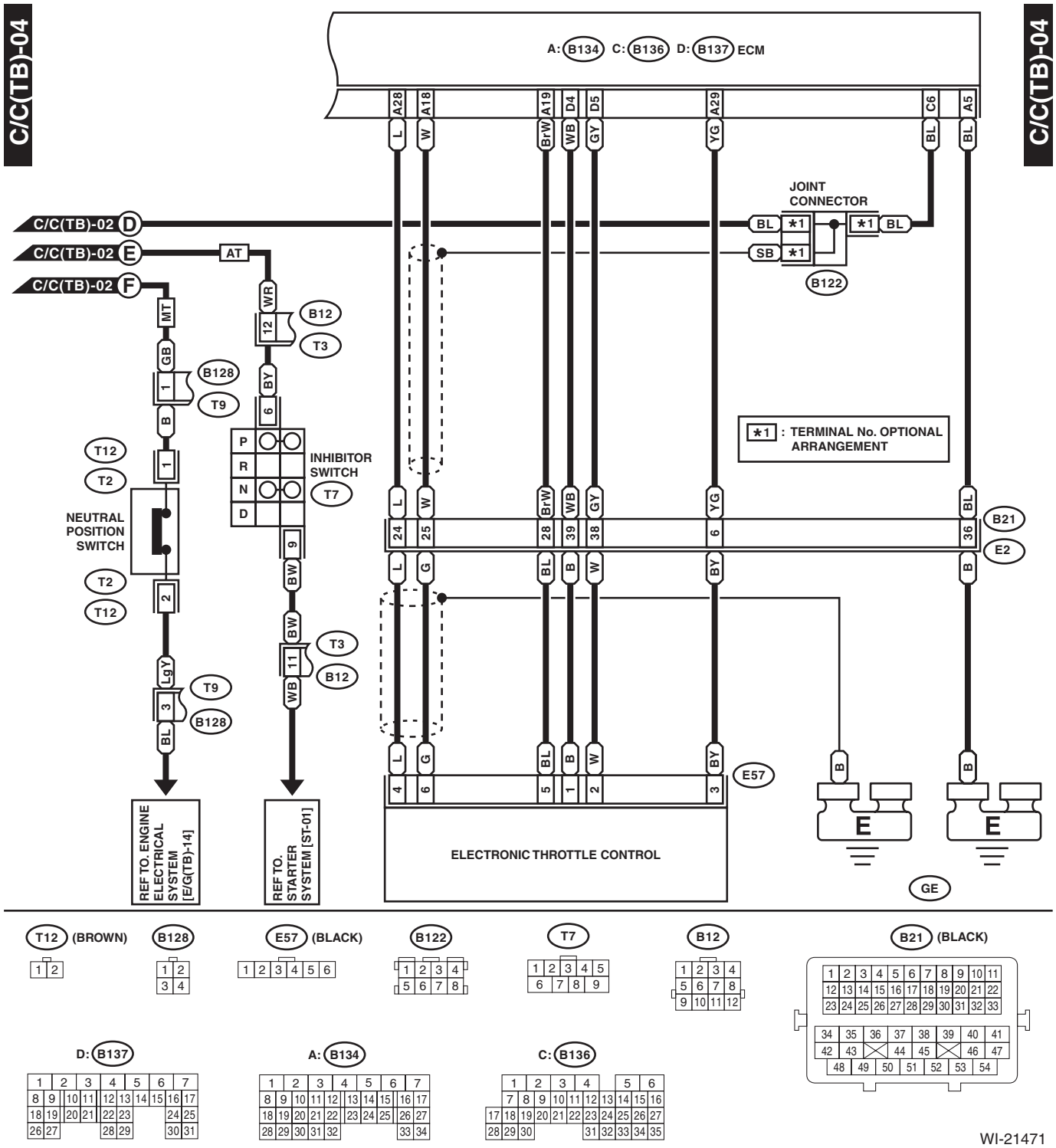
C/C(TB)-04
A: B134 C: B136 D: B137 ECM
A28 A18 A19 D4 D5 A29 C6 A5
L W BrW WB GY YG BL BL
JOINT CONNECTOR
C/C(TB)-02 D
C/C(TB)-02 E
C/C(TB)-02 F
AT
BL *1 *1 BL
SB *1
B122
WR 12 B12 T3
MT
GB 1 B128 T9
BY 6
B
P R N D
INHIBITOR SWITCH
T7
T12 T2
NEUTRAL POSITION SWITCH
T2 T12
9 BW BW
11 T3 B12
LgY 3 T9 B128
WB
BL
*1 : TERMINAL No. OPTIONAL ARRANGEMENT
24 25 28 39 38 6 36
B21 E2
4 6 5 1 2 3
E57
ELECTRONIC THROTTLE CONTROL
REF TO. ENGINE ELECTRICAL SYSTEM [E/G(TB)-14]
REF TO. STARTER SYSTEM [ST-01]
E
GE
T12 (BROWN)
B128
E57 (BLACK)
B122
T7
B12
B21 (BLACK)
D: B137
A: B134
C: B136
WI-21471

50.CAN Communication System

A: WIRING DIAGRAM

1. LOW SPEED CAN

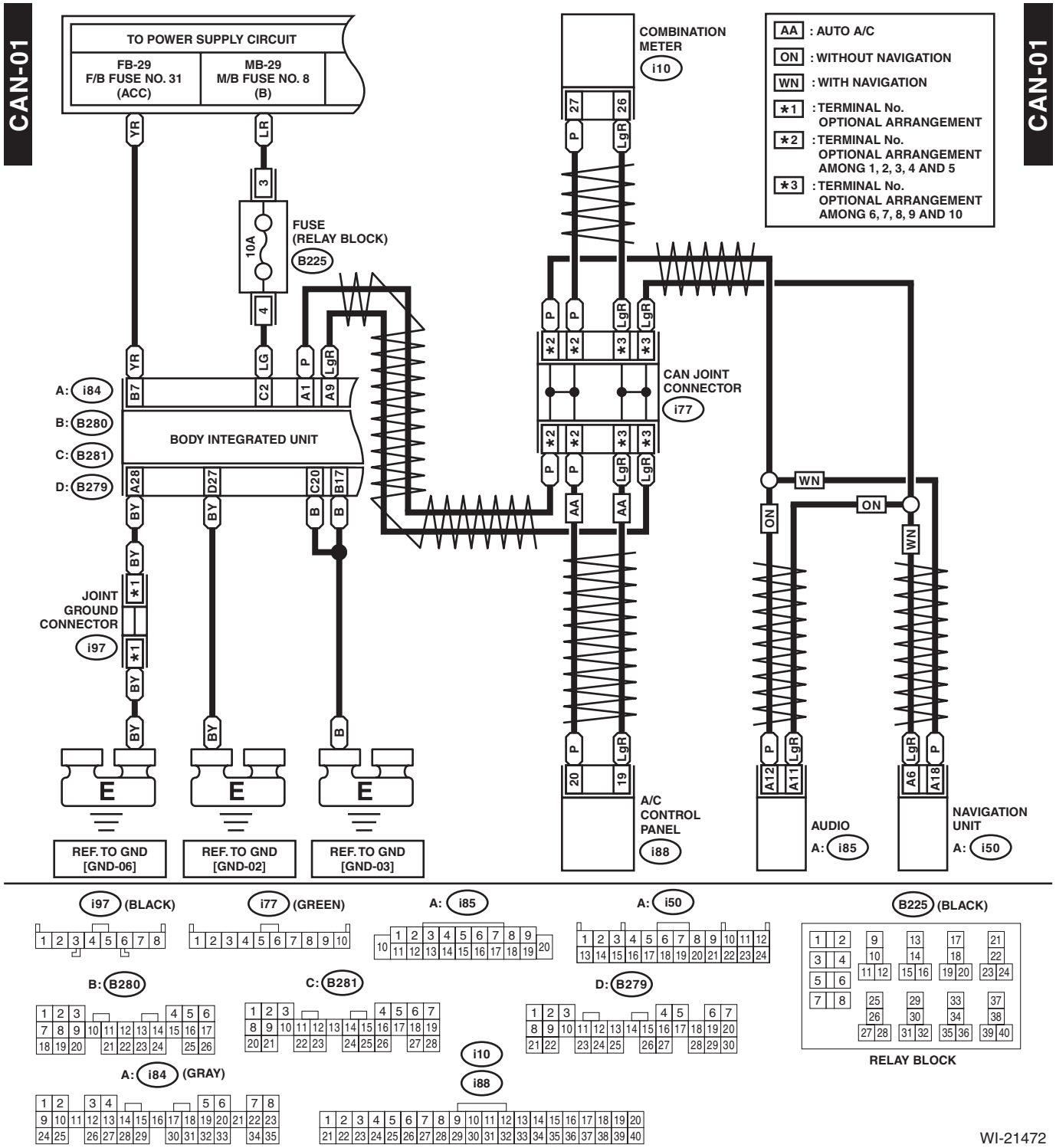

2. HIGH SPEED CAN

- **Models without VDC**

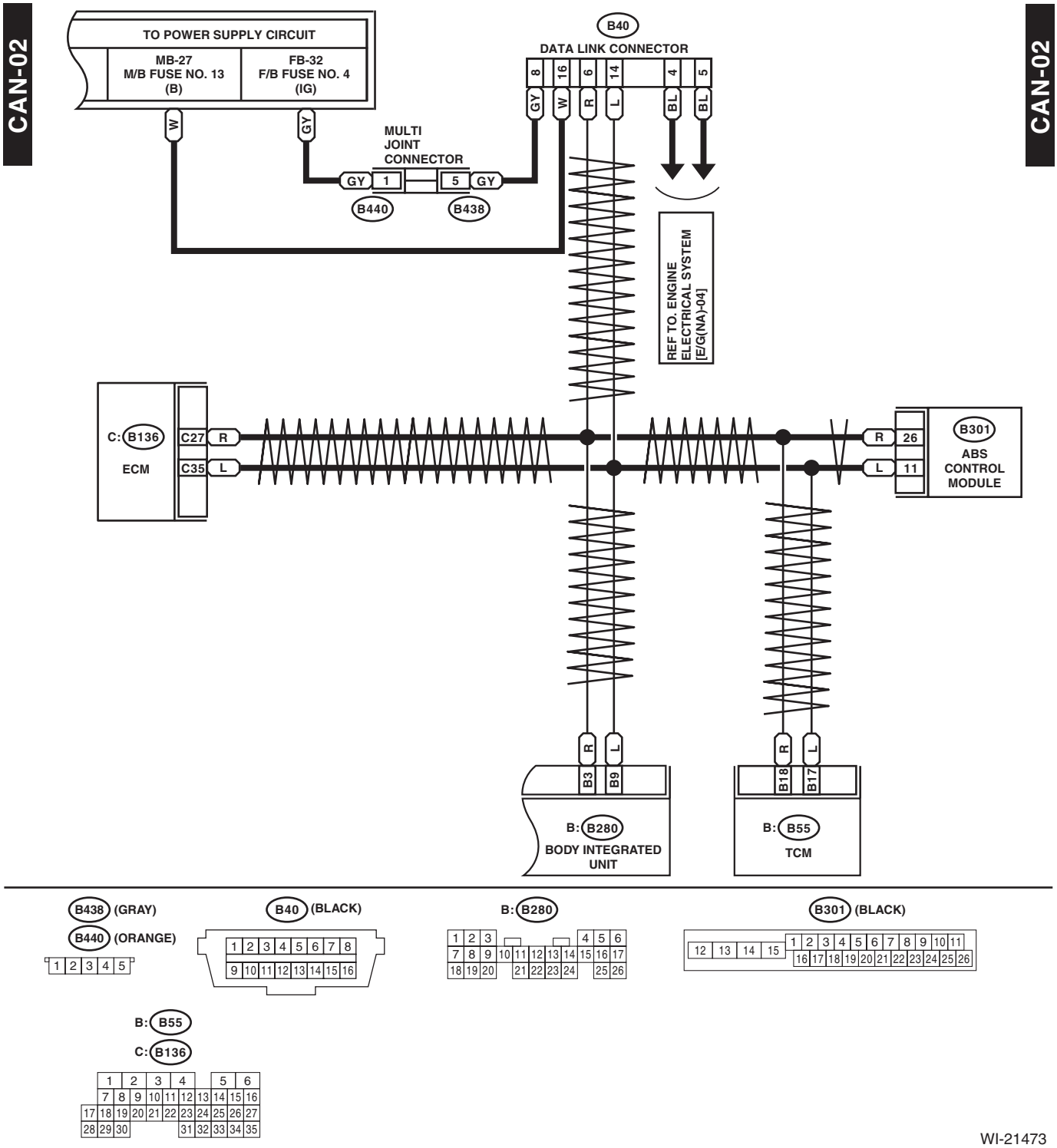

- **Models with VDC**

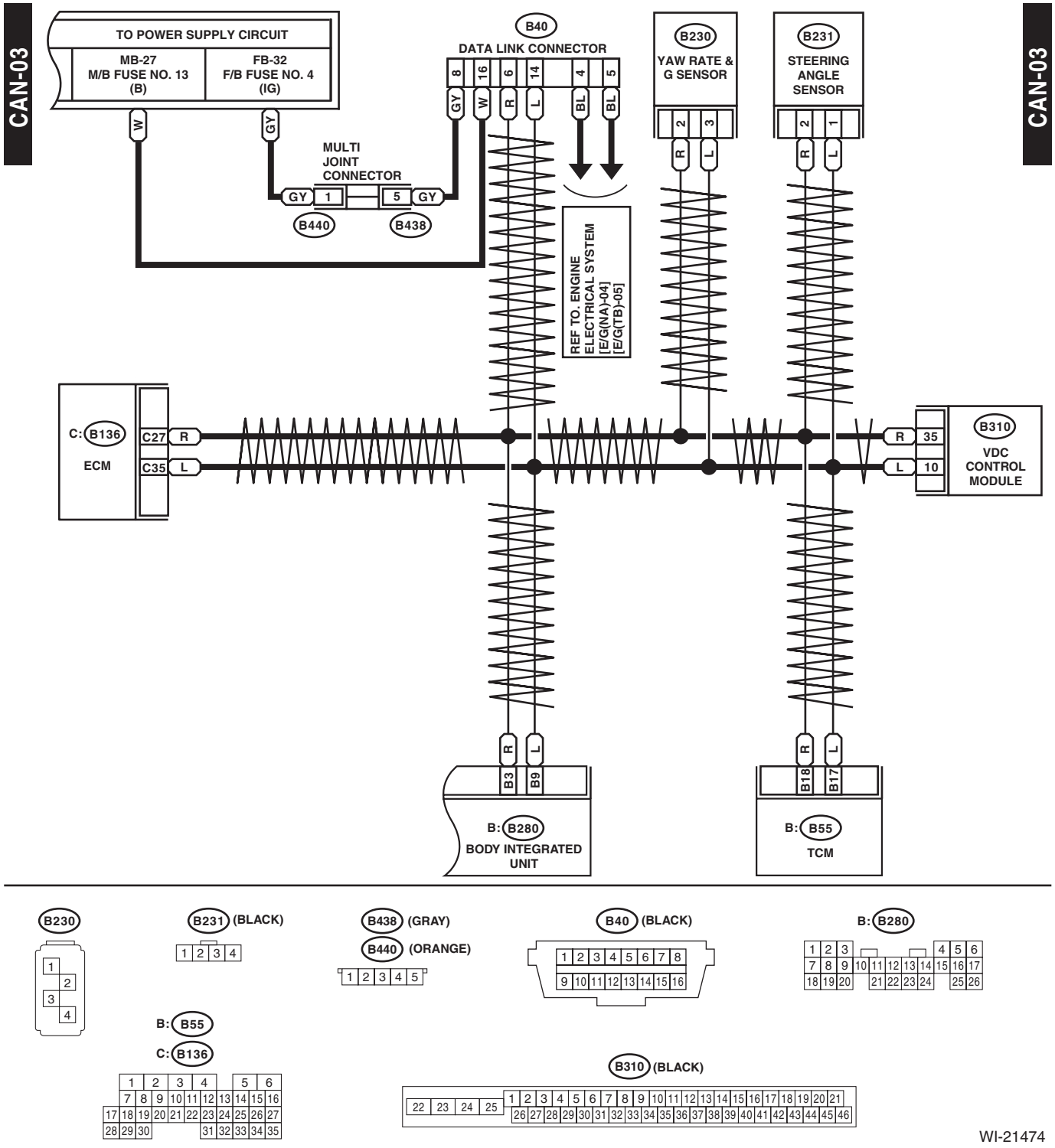

51.Compass Mirror System

A: WIRING DIAGRAM

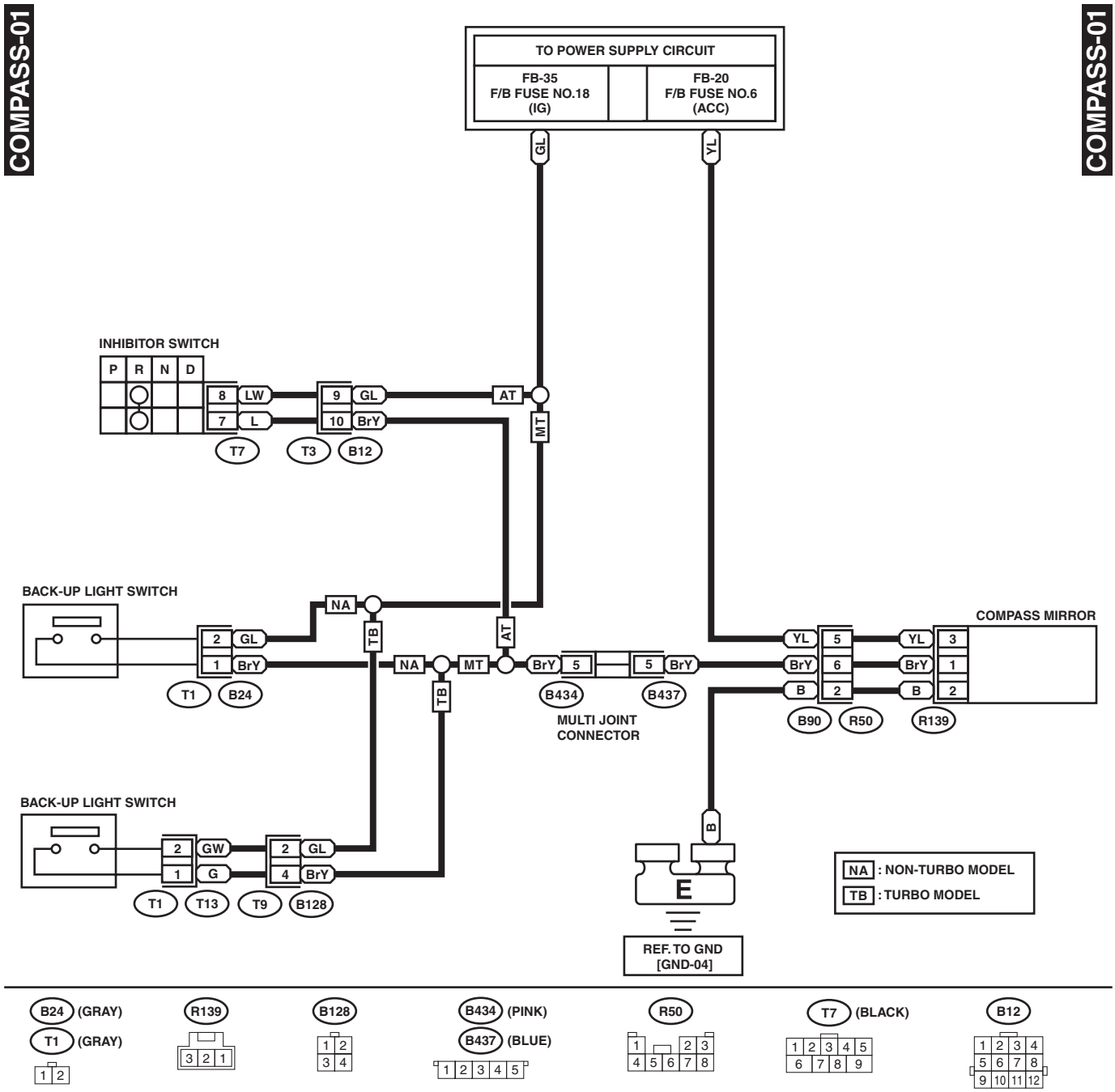

WI-21475

52.Harness Components Location

A: LOCATION

1. 4 DOOR MODEL

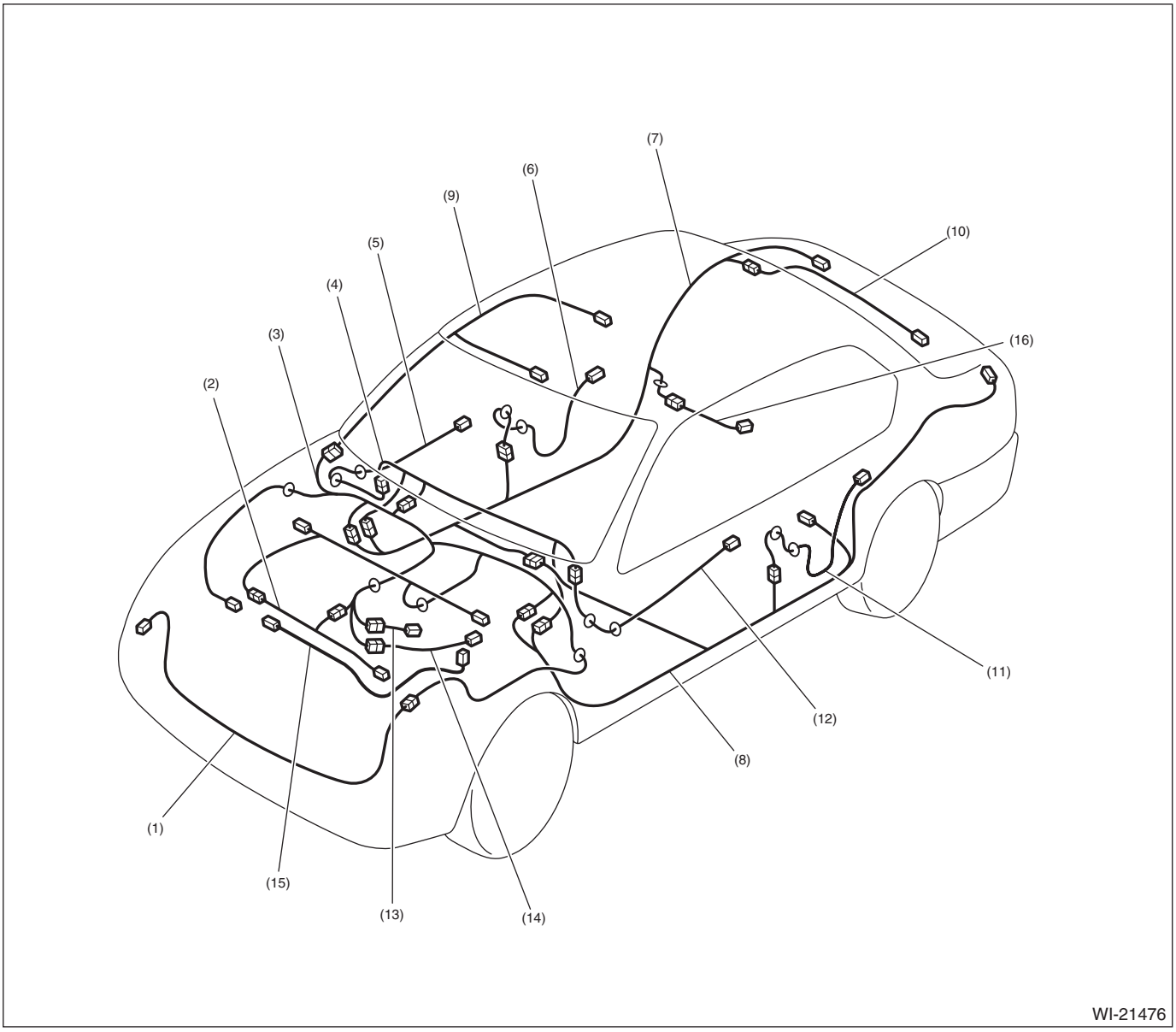

(1)	Front wiring harness	(7)	Rear wiring harness RH	(12)	Front door cord LH
(2)	Engine wiring harness	(8)	Rear wiring harness LH	(13)	Transmission cord
(3)	Bulkhead wiring harness	(9)	Roof cord	(14)	Rear oxygen sensor cord
(4)	Instrument panel wiring harness	(10)	Trunk lid cord	(15)	Generator cord
(5)	Front door cord RH	(11)	Rear door cord LH	(16)	Fuel cord
(6)	Rear door cord RH				

2. 5 DOOR MODEL

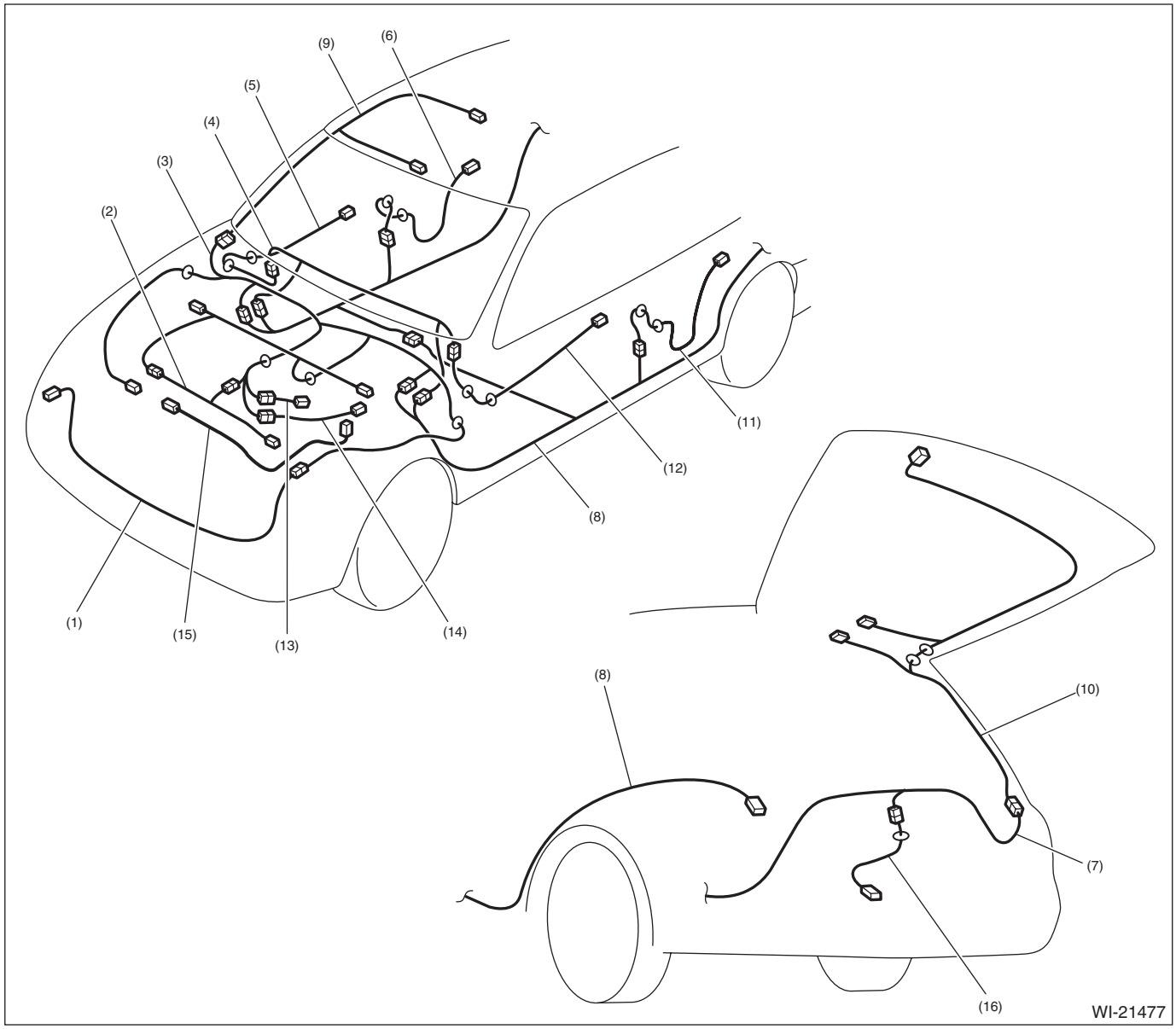

(1)	Front wiring harness	(7)	Rear wiring harness RH	(12)	Front door cord LH
(2)	Engine wiring harness	(8)	Rear wiring harness LH	(13)	Transmission cord
(3)	Bulkhead wiring harness	(9)	Roof cord	(14)	Rear oxygen sensor cord
(4)	Instrument panel wiring harness	(10)	Rear gate cord	(15)	Generator cord
(5)	Front door cord RH	(11)	Rear door cord LH	(16)	Fuel cord
(6)	Rear door cord RH				

53.Front Wiring Harness

A: LOCATION

Connector				Connecting to	
No.	Pole	Color	Area	No.	Description
F5	1	Black	C-2		Horn
F6	2	Brown	C-1		Front fog light RH
F9	16	★	B-5		Secondary air relay holder
F11	2	★	C-3		Secondary air pump
F16	2	Gray	C-1		Sub fan motor (turbo model)
		Black	C-1		Sub fan motor (non-turbo model)
F17	2	Gray	C-2		Main fan motor (turbo model)
		Black	C-2		Main fan motor (non-turbo model)
F21	2	Brown	D-3		Front fog light LH
F24	1	★	C-2		Magnet clutch
F25	1	★	C-2		Generator terminal B
F26	3	★	C-2		Generator
F27	22	Black	B-4		Relay holder
F35	12	Blue	B-4		Main fuse box (M/B)
F36	7	★	B-4		
F37	20	★	C-4		
F47	1	Black	C-2		Horn
F70	2	★	B-4		Main fuse box (M/B)
F78	2	Black	C-2		Ambient sensor
F103	2	Gray	B-1		Daytime running light resistor
F108	18	Gray	B-4	B361	Through joint connector
F109	24	★	B-3	B360	
F125	8	Gray	C-3		Front combination light LH
F126	8	Gray	C-1		Front combination light RH
★ : White or natural color					

Front Wiring Harness

WI-21478

54.Bulkhead Wiring Harness (In Engine Compartment)

A: LOCATION

1. NON-TURBO MODEL

Connector				Connecting to	
No.	Pole	Color	Area	No.	Description
B3	5	★	B-2		Mass air flow and intake air temperature sensor
B6	2	Gray	B-3		Front ABS wheel speed sensor RH
B8	5	★	B-4		Front wiper motor
B10	4	★	C-3		Pressure switch
B11	20	Gray	B-3	T4	Transmission cord (AT model)
B12	12	★	B-3	T3	
B14	1	Black	B-4		Starter motor
B15	2	Gray	B-4		Front ABS wheel speed sensor LH
B16	2	Gray	B-4		Brake fluid level switch
B21	54	Black	B-3	E2	Engine wiring harness
B24	2	Gray	B-3	T1	Back-up light switch (MT model)
B25	2	Brown	B-3	T2	Neutral position switch
B143	20	★	B-4		Main fuse box (M/B)
B144	9	Brown	B-4		
B145	7	Brown	B-4		
B146	2	★	C-4		Front washer motor
B147	2	★	C-4		Rear washer motor
B164	2	Black	C-3		Keyless buzzer
B186	8	★	B-4		Main fuse box (M/B)
B301	26	Black	B-2		ABS control module
B310	46	Black	B-2		VDC control module
B321	2	★	B-1		Hood switch
B360	16	Gray	B-4	F109	Through joint connector
B361	14	★	B-4	F108	
★: White or natural color					

Connector				Connecting to	
No.	Pole	Color	Area	No.	Description
AB13	2	Yellow	C-3		Front sub sensor LH
AB16	2	Yellow	B-1		Front sub sensor RH

Bulkhead Wiring Harness (In Engine Compartment)

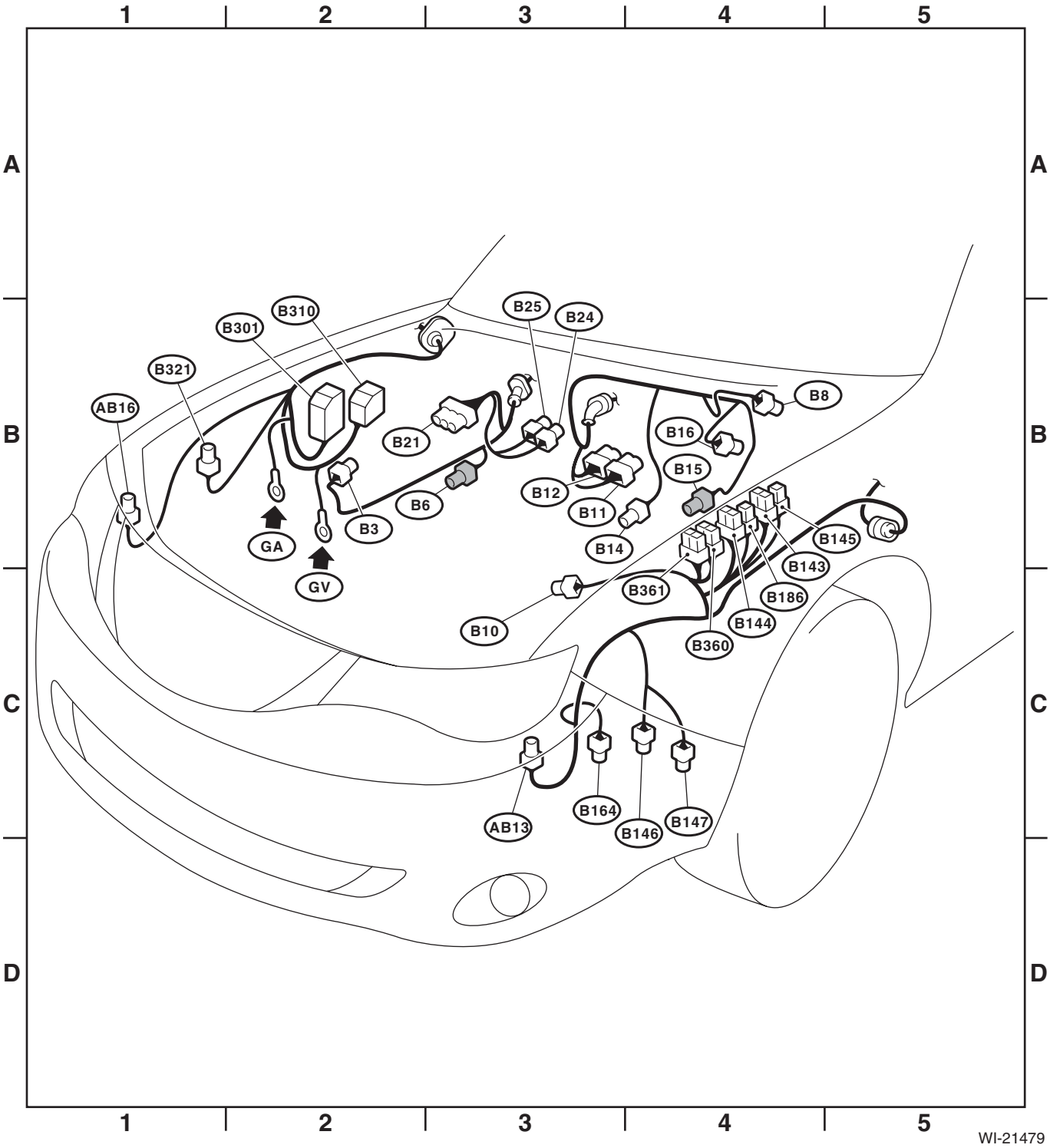

2. TURBO MODEL

Connector				Connecting to	
No.	Pole	Color	Area	No.	Description
B3	5	★	B-2		Mass air flow and intake air temperature sensor
B6	2	Gray	B-3		Front ABS wheel speed sensor RH
B8	5	★	B-4		Front wiper motor
B10	4	★	C-3		Pressure switch
B11	20	Gray	B-3	T4	Transmission cord (AT model)
B12	12	★	B-3	T3	
B14	1	Black	B-4		Starter motor
B15	2	Gray	B-4		Front ABS wheel speed sensor LH
B16	2	Gray	B-4		Brake fluid level switch
B19	4	★	B-3	T5	Rear oxygen sensor cord
B21	54	Black	B-3	E2	Engine wiring harness
B128	4	★	B-3	T9	Transmission cord (MT model)
B143	20	★	B-4		Main fuse box (M/B)
B144	9	Brown	B-4		
B145	7	Brown	B-4		
B146	2	★	C-4		Front washer motor
B147	2	★	C-4		Rear washer motor
B164	2	Black	C-3		Keyless buzzer
B186	8	★	B-4		Main fuse box (M/B)
B301	26	Black	B-2		ABS control module
B310	46	Black	B-2		VDC control module
B321	2	★	B-1		Hood switch
B360	16	Gray	B-4	F109	Through joint connector
B361	14	★	B-4	F108	
★: White or natural color					

Connector				Connecting to	
No.	Pole	Color	Area	No.	Description
AB13	2	Yellow	C-3		Front sub sensor LH
AB16	2	Yellow	B-1		Front sub sensor RH

Bulkhead Wiring Harness (In Engine Compartment)

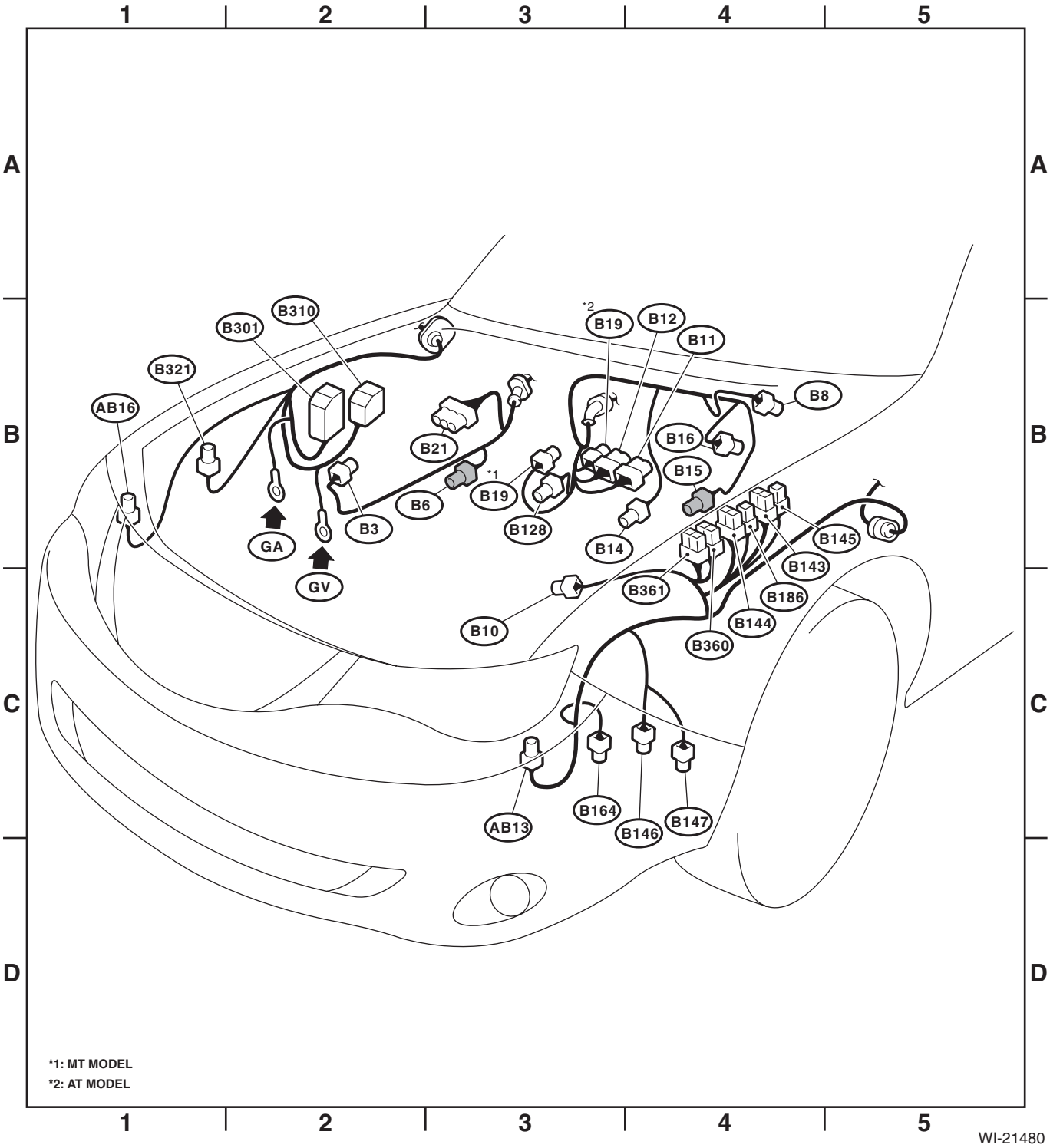

55.Bulkhead Wiring Harness (In Compartment)

A: LOCATION

Connector				Connecting to	
No.	Pole	Color	Area	No.	Description
B27	4	★	B-3		Blower Resistor (Manual A/C)
B31	6	★	C-1	AB1	Airbag wiring harness
B32	8	★	C-2		Turn signal and hazard unit
B36	28	★	B-4	i1	Instrument panel wiring harness
B38	28	★	B-2	i3	
B40	16	Black	C-2		Data link connector
B41	2	★	B-2		Power window circuit breaker
B52	24	★	B-2		Fuse & relay box (F/B)
B53	20	★	C-3		Joint connector
B54	35	★	C-3		TCM
B55	35	★	C-3		
B57	4	★	B-3		Power transistor (Auto A/C)
B65	4	★	C-2		Stop light & brake switch (4 door model)
		Black	C-2		Stop light & brake switch (5 door model)
B68	14	★	C-2		Roll connector
B70	18	★	C-2		Combination switch
B71	17	★	C-2		
B72	6	★	C-2		Ignition switch
B75	2	Green	B-4	B76	Delivery (test) mode connector
B76	2	Green	B-4	B75	
B77	6	★	B-3		Mode door actuator (Auto A/C)
B83	8	★	C-4		Joint connector
B87	2	★	B-4		Blower motor
B88	2	Brown	B-3		Evaporator sensor (Auto A/C)
	3	★	B-3		Evaporator sensor (Manual A/C)
B89	2	Black	B-5		Blower diode
B90	8	★	B-5	R50	Roof cord
B97	12	★	C-5	R1	Rear wiring harness RH
B98	20	★	C-5	R2	
B99	12	★	C-1	R3	Rear wiring harness LH
B106	2	★	C-2		Clutch switch
B107	2	Blue	C-2		Clutch switch (cruise control)
B117	10	Gray	C-4		AT select lever
B122	8	★	C-4		Joint connector
B123	2	Black	C-1	B124	Key lock
B124	2	Black	C-1	B123	
B134	34	★	C-4		ECM
B135	35	★	C-4		
B136	35	★	C-4		
B137	31	★	C-4		
B138	8	★	C-4		Joint connector
B152	10	Gray	B-2		Fuse & relay box (F/B)
B158	8	★	B-2		
B159	9	Brown	B-2		
B162	2	★	B-2		
B163	6	★	C-4		Intake door actuator

Connector				Connecting to	
No.	Pole	Color	Area	No.	Description
B177	2	★	B-5		Wiper deicer
B180	24	★	B-2		Remote engine start control module
B181	2	★	B-2	B182	Short connector
B182	2	★	C-2	B181	
B220	40	★	B-4		Fuse (Relay block)
					A/F, oxygen sensor relay
					Fuel pump relay
					IG relay
					Main relay
					Electronic throttle control relay
B224	2	★	C-2		Key illumination
B225	40	Black	C-2		Fuse (Relay block)
					Starter relay
					Front fog light relay
					Power window relay
					Wiper deicer relay
					Tail & Illumination relay
					Seat heater relay
B230	4	★	D-4		Yaw rate & G sensor (with VDC)
B231	4	Black	C-2		Steering angle sensor (with VDC)
B239	6	★	B-3		Air mix door actuator (Auto A/C)
B279	30	★	C-3		Body integrated unit
B280	26	★	C-3		
B281	28	★	C-3		
B292	3	★	D-4		ABS G sensor (without VDC)
B315	6	★	C-3		Accelerator pedal position sensor
B318	4	★	B-1		VDC OFF switch (with VDC)
B350	4	★	C-2		Key warning switch & key lock solenoid
B358	2	★	C-4		AT select lever illumination
B363	2	Green	C-1	B364	Test mode sub connector
B364	2	Green	C-1	B363	
B367	8	★	C-2		Impact sensor
B386	7	★	B-4		Blower motor relay
B415	2	Black	B-2		Immobilizer antenna
B434	5	Pink	D-1		Multi joint connector
B435	5	Brown	D-1		
B436	5	Yellow	D-1		
B437	5	Blue	D-1		
B438	5	Gray	D-1		
B439	5	Green	D-1		
B440	5	Orange	D-1		
B441	5	★	D-1		
B442	5	Black	D-2		
B443	5	Red	D-2		
B444	5	Yellow green	D-2		
B445	5	Violet	D-2		
★ : White or natural color					

Bulkhead Wiring Harness (In Compartment)

Connector				Connecting to	
No.	Pole	Color	Area	No.	Description
AB1	6	★	C-1	B31	Bulkhead wiring harness
AB2	4	Yellow	C-2	AB7	Driver's airbag module
AB6	30	Yellow	C-4		Airbag control module
AB9	4	Yellow	C-4		Passenger's airbag module
★ : White or natural color					

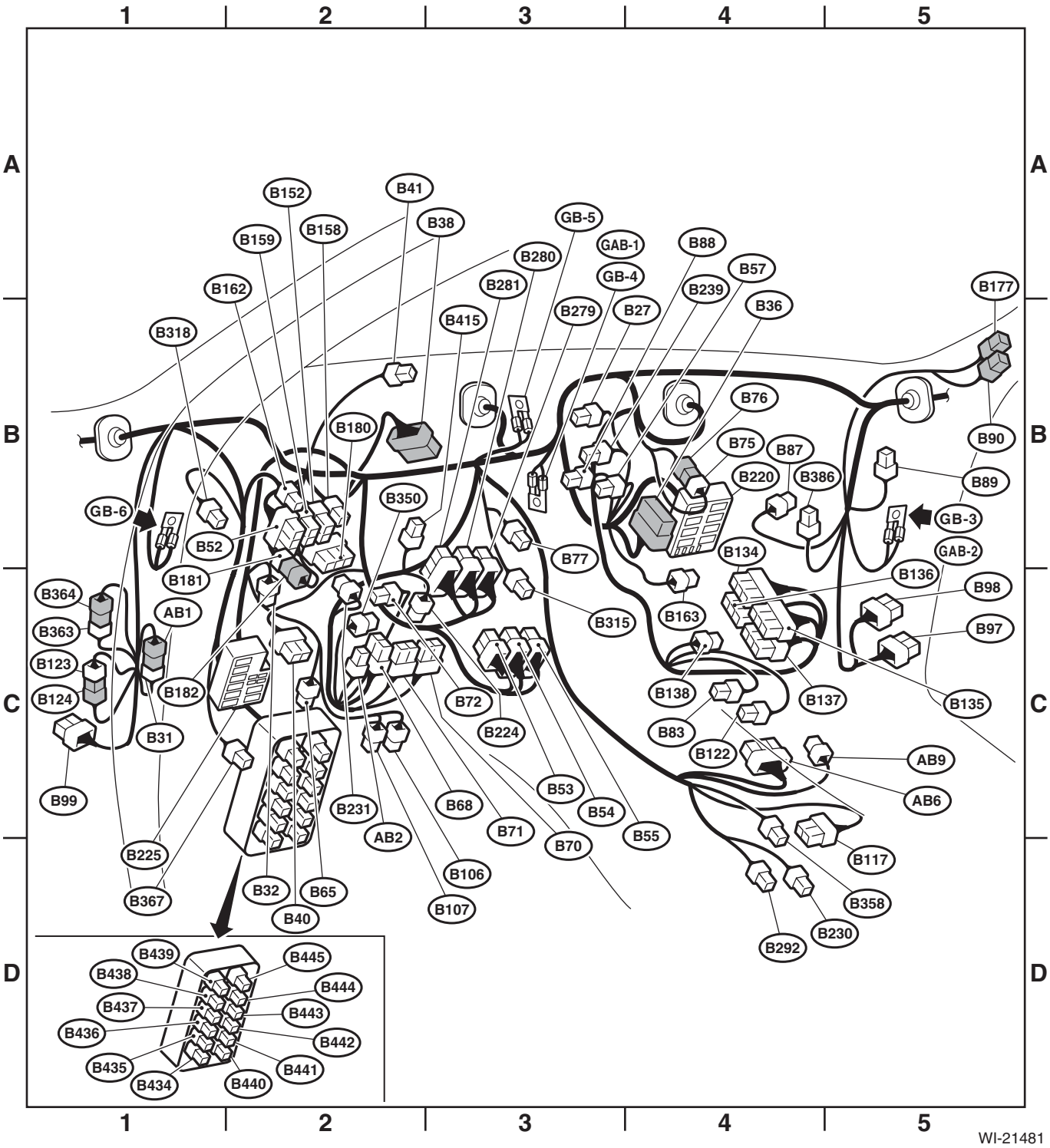

56.Engine Wiring Harness and Transmission Cord

A: LOCATION

1. NON-TURBO MODEL

Connector				Connecting to	
No.	Pole	Color	Area	No.	Description
E2	54	Black	A-3	B21	Bulkhead wiring harness
E4	2	Black	B-3		Purge control solenoid valve
E5	2	Dark gray	B-1		Fuel injector No. 1
E6	2	Dark gray	A-2		Fuel injector No. 3
E8	2	Black	B-2		Engine coolant temperature sensor
E10	2	Light gray	B-3		Crankshaft position sensor
E11	1	—	B-2		Oil pressure switch
E12	4	Dark gray	A-2		Ignition coil & ignitor assembly
E14	2	Gray	B-4		Knock sensor
E15	2	Black	B-4		Camshaft position sensor
E16	2	Dark gray	B-4		Fuel injector No. 2
E17	2	Dark gray	B-4		Fuel injector No. 4
E18	6	Dark gray	A-4		EGR valve
E19	1	★	B-2		Power steering oil pressure switch
E21	3	Black	A-4		Manifold absolute pressure sensor
E22	6	Black	A-1		Front oxygen (A/F) sensor
E23	4	Dark gray	A-1		Rear oxygen sensor
E57	6	Black	A-3		Electronic throttle control
E61	2	Dark gray	A-3		PCV diagnosis connector
E67	2	Blue	A-2		Oil switching solenoid valve RH
E68	2	Blue	B-4		Oil switching solenoid valve LH
E71	1	★	A-2		Variable valve lift diagnosis oil pressure switch RH
E72	1	★	B-4		Variable valve lift diagnosis oil pressure switch LH
E75	2	Black	B-2		Oil temperature sensor
★: White or natural color					

- **MT MODEL**

Connector				Connecting to	
No.	Pole	Color	Area	No.	Description
T1	2	Gray	D-2	B24	Bulkhead wiring harness
T2	2	Brown	D-2	B25	

- **AT MODEL**

Connector				Connecting to	
No.	Pole	Color	Area	No.	Description
T3	12	Black	D-4	B12	Bulkhead wiring harness
T4	20	Gray	D-4	B11	
T7	9	Black	D-5		Inhibitor switch
AT4	3	★	C-5		Rear vehicle speed sensor
★: White or natural color					

Engine Wiring Harness and Transmission Cord

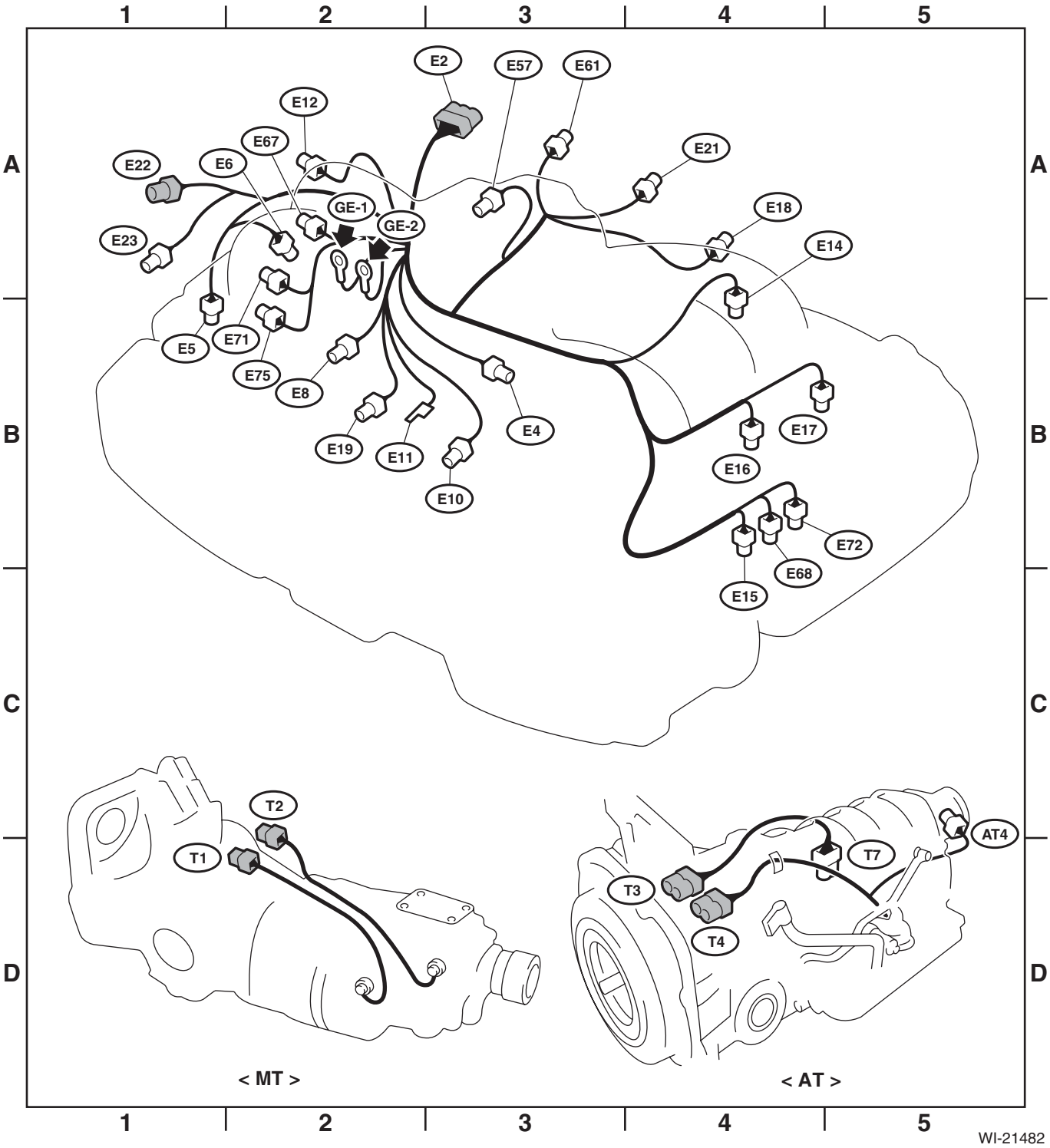

2. TURBO MODEL

Connector				Connecting to	
No.	Pole	Color	Area	No.	Description
E2	54	Black	A-2	B21	Bulkhead wiring harness
E4	2	Black	B-2		Purge control solenoid valve 1
E5	2	Dark gray	A-1		Fuel injector No. 1
E6	2	Dark gray	A-2		Fuel injector No. 3
E8	2	Black	B-2		Engine coolant temperature sensor
E10	2	Light gray	B-3		Crankshaft position sensor
E11	1	—	B-2		Oil pressure switch
E14	2	Light gray	A-3		Knock sensor
E16	2	Dark gray	B-4		Fuel injector No. 2
E17	2	Dark gray	B-4		Fuel injector No. 4
E19	1	★	B-2		Power steering oil pressure switch
E21	3	Black	A-3		Manifold absolute pressure sensor
E22	4	Dark gray	B-2		Front oxygen (A/F) sensor
E31	3	★	B-2		Ignition coil No. 1
E32	3	★	B-4		Ignition coil No. 2
E33	3	Black	A-2		Ignition coil No. 3
E34	3	Black	B-4		Ignition coil No. 4
E35	3	Light gray	A-4		Camshaft position sensor LH
E36	3	Light gray	A-2		Camshaft position sensor RH
E37	2	Blue	B-4		Oil flow control solenoid valve LH
E38	2	Blue	B-1		Oil flow control solenoid valve RH
E40	2	Black	B-4		Secondary air combination valve LH
E41	6	Black	B-2		Secondary air combination valve RH
E51	5	Light gray	B-4		Tumble generator valve assembly LH
E52	2	Black	A-3		Purge control solenoid valve 2
E55	5	Light gray	A-1		Tumble generator valve assembly RH
E57	6	Black	A-3		Electronic throttle control
E64	2	Blue	A-3		Wastegate control solenoid valve
E80	2	Dark gray	B-2		Leak diagnosis connector
★: White or natural color					

• MT MODEL

Connector				Connecting to	
No.	Pole	Color	Area	No.	Description
T1	2	Gray	D-2	T13	Transmission cord
T2	2	Brown	D-2	T12	
T5	4	Dark gray	C-1	B19	Bulkhead wiring harness
T6	4	Dark gray	D-2		Rear oxygen sensor
T9	4	Gray	C-1	B128	Bulkhead wiring harness
T12	2	Brown	D-2	T2	Neutral position switch
T13	2	Gray	D-2	T1	Back-up light switch

- **AT MODEL**

Connector				Connecting to	
No.	Pole	Color	Area	No.	Description
T3	12	Black	D-4	B12	Bulkhead wiring harness
T4	20	Gray	D-4	B11	
T5	4	Dark gray	C-3	B19	
T6	4	Dark gray	D-5		Rear oxygen sensor
T7	9	Black	C-5		Inhibitor switch
AT4	3	★	C-5		Rear vehicle speed sensor
★ : White or natural color					

Engine Wiring Harness and Transmission Cord

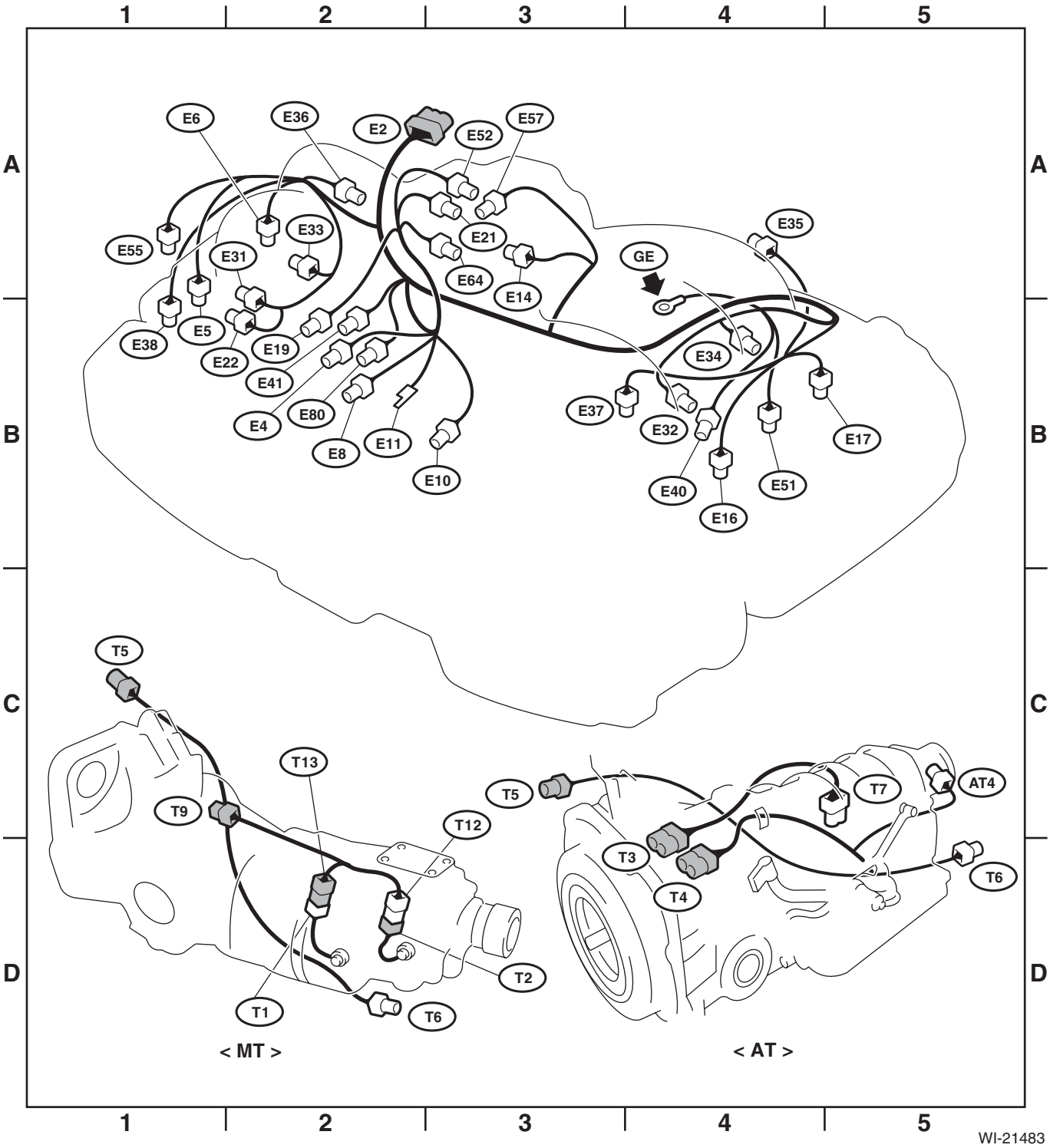

57.Instrument Panel Wiring Harness

A: LOCATION

Connector				Connecting to	
No.	Pole	Color	Area	No.	Description
i1	28	★	B-4	B36	Bulkhead wiring harness
i3	28	★	B-1	B38	
i5	20	★	C-1		Fuse & relay box (F/B)
i6	10	★	C-2		Remote control mirror switch
i10	40	★	B-2		Combination meter
i15	6	★	B-4		Blower fan switch (Manual A/C)
i16	12	★	B-4		A/C control panel (Manual A/C)
i22	4	★	B-3		Hazard switch
i23	2	★	B-4		Glove box light
i24	4	★	C-4	AD1	Adapter cord (front accessory power supply socket, pocket light)
i29	1	Black	B-3		Audio bracket ground
i50	24	★	B-4		Navigation module
i51	2	★	B-3		Sunload sensor
i53	16	★	C-5	R98	Rear wiring harness RH
i54	10	★	C-5	R99	Rear wiring harness RH
i55	2	★	B-3		In-vehicle sensor
i59	10	★	B-3		Clock
i76	28	★	C-1	D83	Front door cord LH
i77	10	Green	B-3		CAN joint connector
i79	6	★	B-2		Illumination control unit
i84	35	Gray	B-2		Body integrated unit
i85	20	★	B-4		Audio
i86	8	Black	B-4		Audio (with AUX input terminal)
i87	14	★	B-3		Navigation module
i88	40	★	B-3		A/C control panel (Auto A/C)
i97	8	Black	B-2		Joint ground connector
i98	8	Black	B-1		
i99	8	Black	B-5		
i100	8	Black	B-5		
i101	25	★	C-5	D84	Front door cord RH
i102	16	★	C-1	R167	Rear wiring harness LH
★ White or natural color					

Instrument Panel Wiring Harness

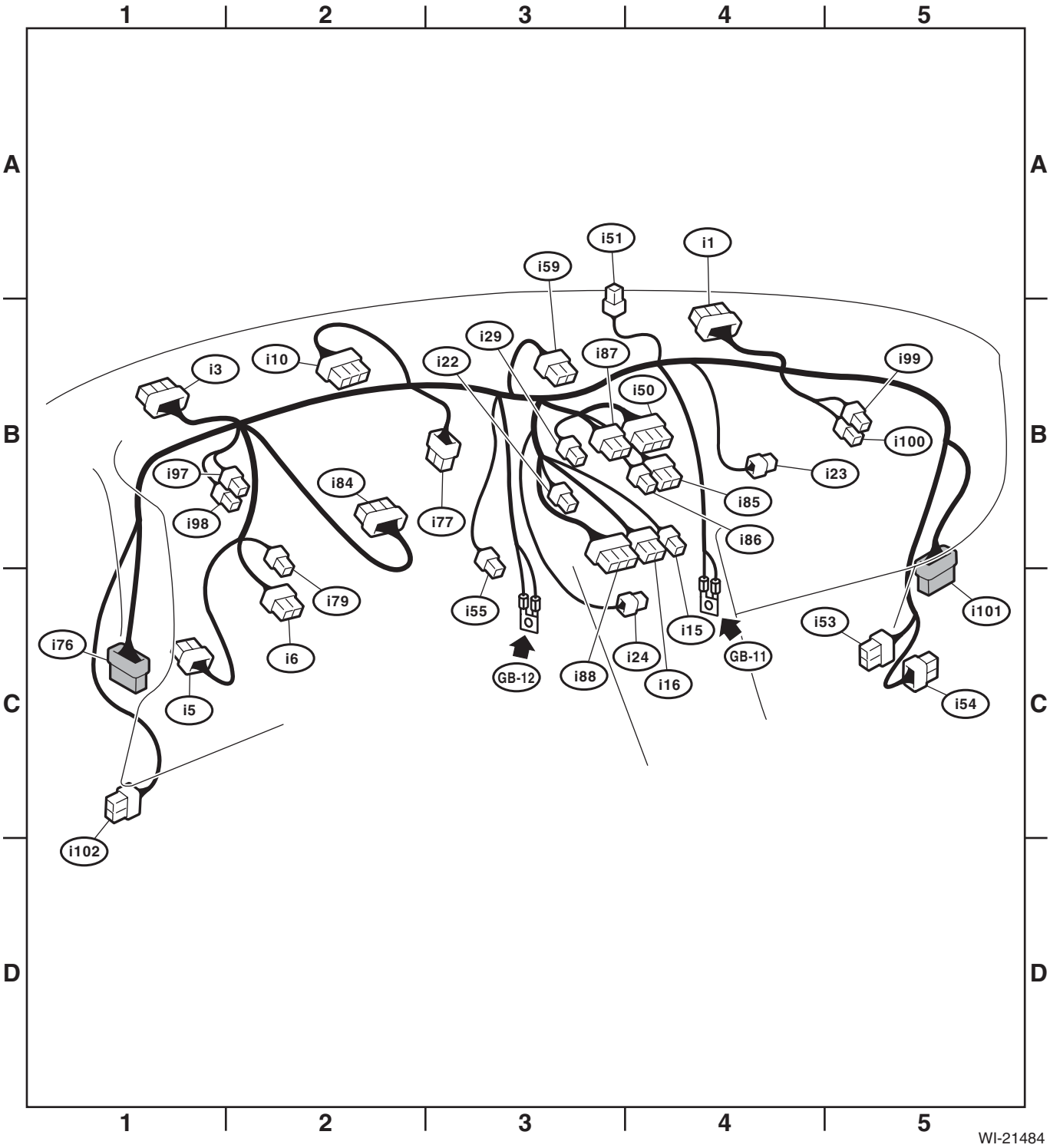

58.Rear Wiring Harness

A: LOCATION

Connector				Connecting to	
No.	Pole	Color	Area	No.	Description
R1	12	★	B-1	B97	Bulkhead wiring harness
R2	20	★	B-1	B98	
R3	12	★	C-3	B99	
R4	1	Black	C-3		Parking brake switch
R9	3	★	C-4		Front door switch LH
R10	8	★	C-4	D22	Rear door cord LH
R12	3	★	B-2		Front door switch RH
R13	8	★	B-2	D28	Rear door cord RH
R15	12	★	B-4	R57	Fuel cord
R16	3	★	A-3		Rear door switch RH
R32	2	★	B-3		Rear accessory power supply socket
R41	4	★	C-3		Seat heater LH
R42	4	★	B-3		Seat heater switch RH
R43	4	Blue	B-3		Seat heater switch LH
R44	4	★	B-3		Seat heater RH
R47	3	Black	B-4		Fuel tank pressure sensor
R50	8	★	B-1	B90	Bulkhead wiring harness
R52	3	★	A-3		Room light
R55	10	Gray	B-3		Sunroof motor assembly
R56	2	★	B-2		Spot map light
R57	12	★	B-4	R15	Rear wiring harness RH
R58	6	★	B-4		Fuel pump assembly
R59	2	★	B-5		Fuel sub level sensor
R62	2	★	B-3		Spot map light (with sunroof)
R64	3	★	B-2		Spot map light diode (with sunroof)
R68	2	Dark gray	B-4		Pressure control solenoid valve
R72	2	Gray	B-4		Rear ABS wheel speed sensor RH
R73	2	Gray	B-4		Rear ABS wheel speed sensor LH
R81	12	★	C-3	R82	Rear wiring harness RH
R82	12	★	B-3	R81	Rear wiring harness LH
R98	16	★	B-1	i53	Instrument panel wiring harness
R99	10	★	B-1	i54	
R107	4	★	C-3		Seat belt switch LH
R128	5	★	B-3		Sunroof switch
R139	3	★	B-3		Compass mirror
R167	16	★	C-3	i102	Instrument panel wiring harness
R168	20	★	C-3		Fuse & relay box (F/B)
R187	5	Black	B-3		Sunroof switch (tilt)
R211	12	★	B-4		TPM control module
R284	6	★	B-3		AUX input terminal
★ : White or natural color					

Connector				Connecting to	
No.	Pole	Color	Area	No.	Description
AB17	24	Yellow	C-2		Airbag control module
AB18	24	Yellow	C-2		
AB19	4	Yellow	C-3		Side airbag module LH
AB21	2	Black	C-4		Pretensioner LH
AB23	4	Yellow	C-4		Side airbag sensor LH
AB24	4	Yellow	B-2		Side airbag module RH
AB26	2	Black	B-2		Pretensioner RH
AB28	4	Yellow	B-2		Side airbag sensor RH
AB34	4	Yellow	B-3		Curtain airbag sensor RH
AB35	2	Black	C-3		Fuse & relay box (F/B)
AB41	2	Yellow	B-4		Satellite safing sensor
AB53	6	Gray	B-2		Occupant detection control module
AB56	3	Brown	B-3		Belt tension sensor

Rear Wiring Harness

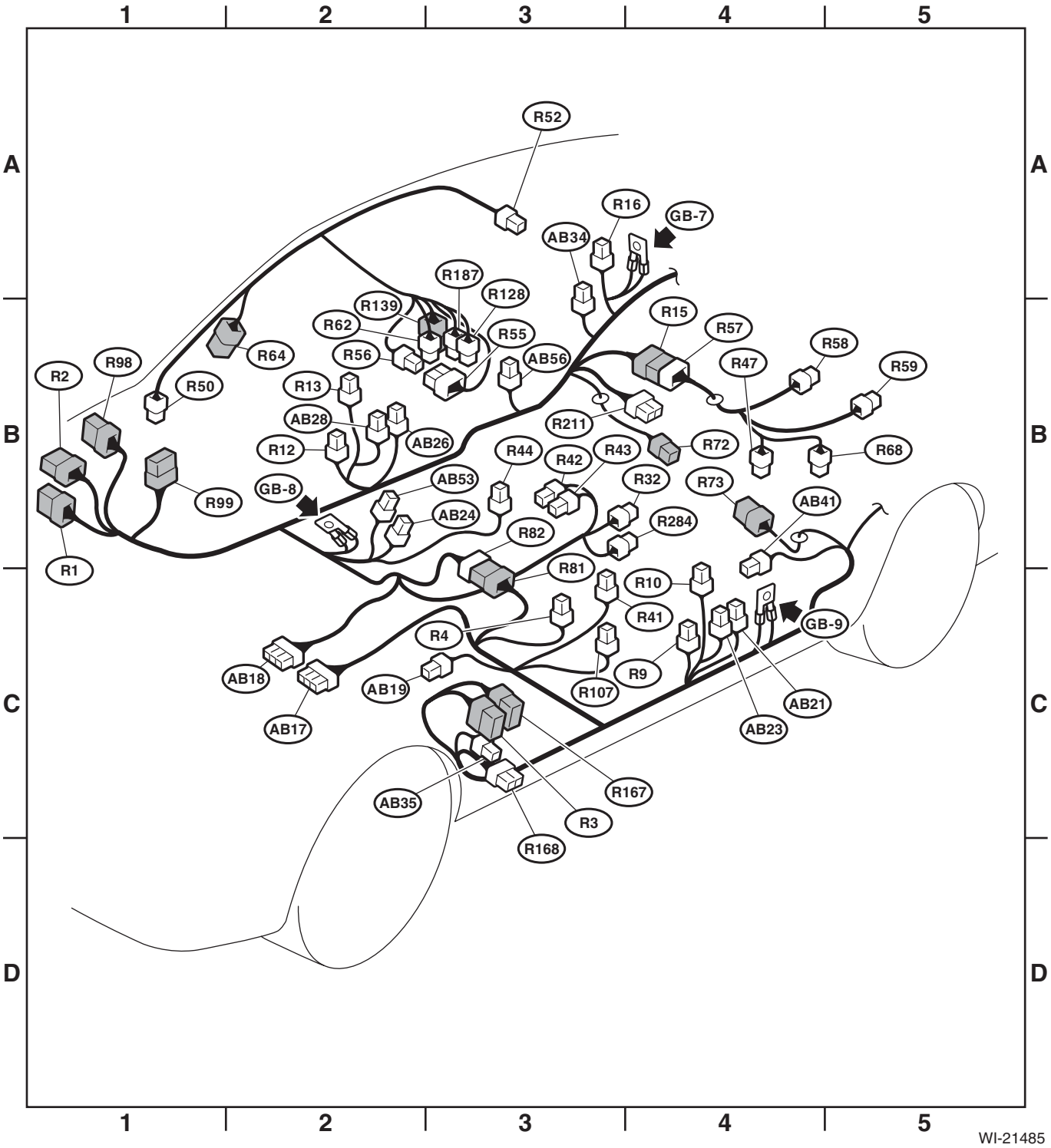

59.Door Cord

A: LOCATION

Connector				Connecting to	
No.	Pole	Color	Area	No.	Description
D2	2	★	C-4		Front door speaker LH
D3	6	★	C-4		Front power window motor LH
D4	2	Black	C-3		Front door tweeter LH
D5	8	★	C-3		Outer mirror assembly LH (without mirror heater)
	10	★	C-4		Outer mirror assembly LH (with mirror heater)
D7	16	★	B-4		Power window main switch
D12	2	★	B-2		Front door speaker RH
D13	6	★	B-2		Front power window motor RH
D14	2	Black	B-2		Front door tweeter RH
D15	8	★	B-2		Outer mirror assembly RH (without mirror heater)
	10	★	B-2		Outer mirror assembly RH (with mirror heater)
D17	8	★	B-2		Front power window sub-switch
D18	2	★	B-3		Front door lock actuator RH
D22	8	★	C-4	R10	Rear wiring harness LH
D23	2	★	C-4		Rear door speaker LH
D24	6	★	B-4		Rear power window motor LH
D25	8	★	B-4		Rear power window sub switch LH
D26	2	★	B-5		Rear door lock actuator LH
D28	8	★	B-3	R13	Rear wiring harness RH
D29	2	★	B-3		Rear door speaker RH
D30	6	★	B-3		Rear power window motor RH
D31	8	★	B-3		Rear power window sub switch RH
D32	2	★	B-3		Rear door lock actuator RH
D72	2	★	C-4		Front door lock actuator LH
D83	28	★	C-3	i76	Instrument panel wiring harness
D84	25	★	B-2	i101	
D102	3	★	C-4		Power window main switch
D125	5	★	B-2		Passenger's seat door lock switch
★: White or natural color					

Door Cord

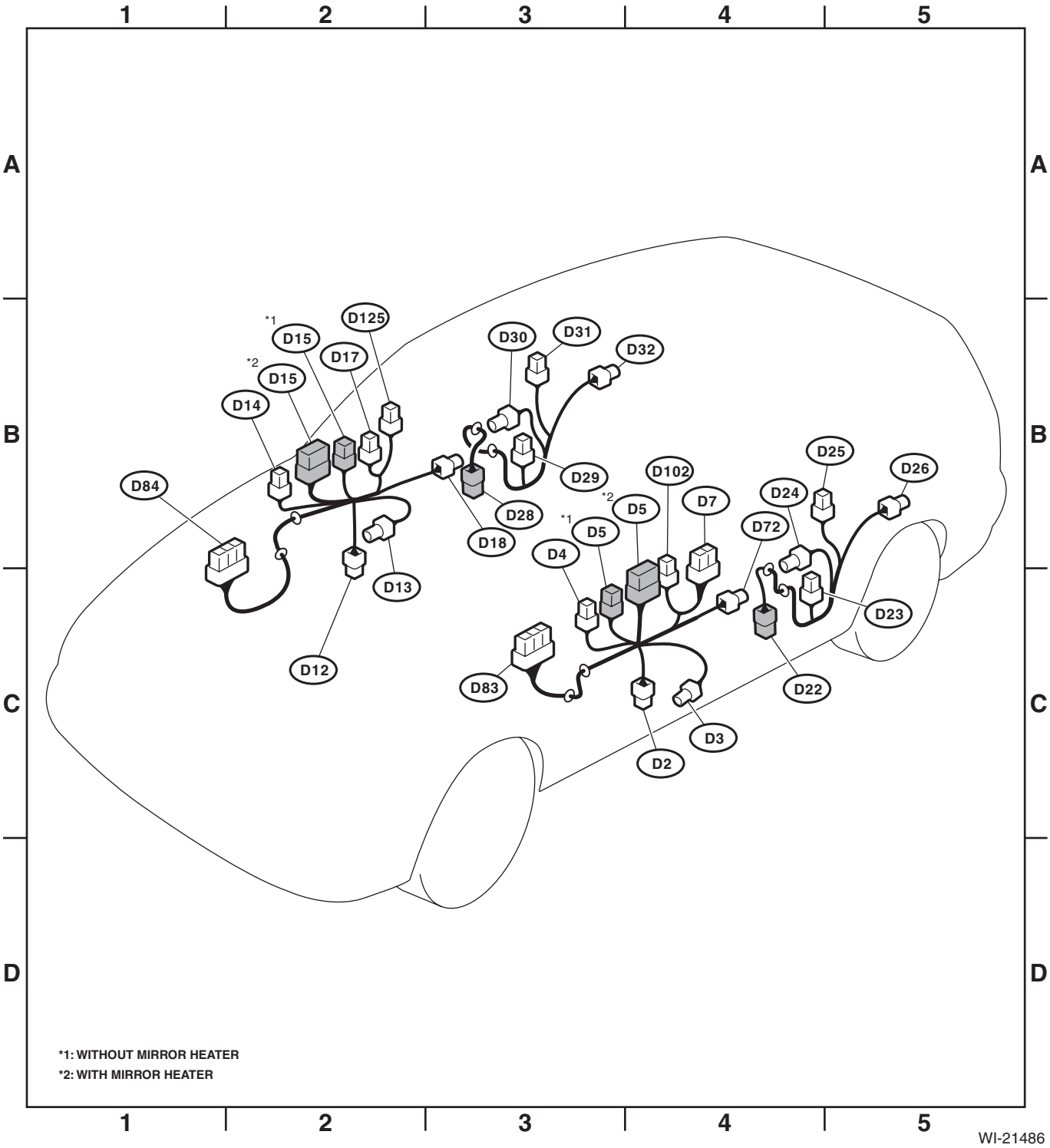
1
2
3
4
5
A
B
C
D
D125
*1
D15
D17
*2
D15
D14
D84
D13
D12
D30
D31
D32
D29
D28
D18
D102
*2
D5
D7
*1
D5
D4
D83
D2
D3
D72
D24
D25
D26
D23
D22
*1: WITHOUT MIRROR HEATER
*2: WITH MIRROR HEATER
WI-21486

60.Rear Wiring Harness and Trunk Lid Cord

A: LOCATION

Connector				Connecting to	
No.	Pole	Color	Area	No.	Description
R19	2	Blue	B-3		High-mounted stop light
R20	2	Black	B-4		Trunk room light
R22	3	★	B-1		Rear door switch LH
R24	8	★	B-4	R60	Trunk lid cord
R26	6	★	B-5		Rear combination light RH
R28	6	★	C-3		Rear combination light LH
R60	8	★	B-4	R24	Rear wiring harness RH
R65	1	★	B-2		Rear defogger (–)
R66	2	★	B-4		High-mounted stop light (Rear spoiler)
R76	2	★	B-4		License plate light
R80	8	★	B-2		Keyless entry control module
R86	2	Black	C-4		Drain valve
R97	1	★	B-2		Antenna amplifier
R122	10	Black	B-5		Fuel pump control unit
R174	1	★	B-4		Rear defogger (+)
R186	3	★	C-4		Trunk lid lock actuator & switch
★: White or natural color					

Connector				Connecting to	
No.	Pole	Color	Area	No.	Description
AB31	2	Black	B-2		Curtain airbag module LH
AB32	4	Yellow	B-1		Curtain airbag sensor LH
AB33	2	Black	B-4		Curtain airbag module RH

Rear Wiring Harness and Trunk Lid Cord

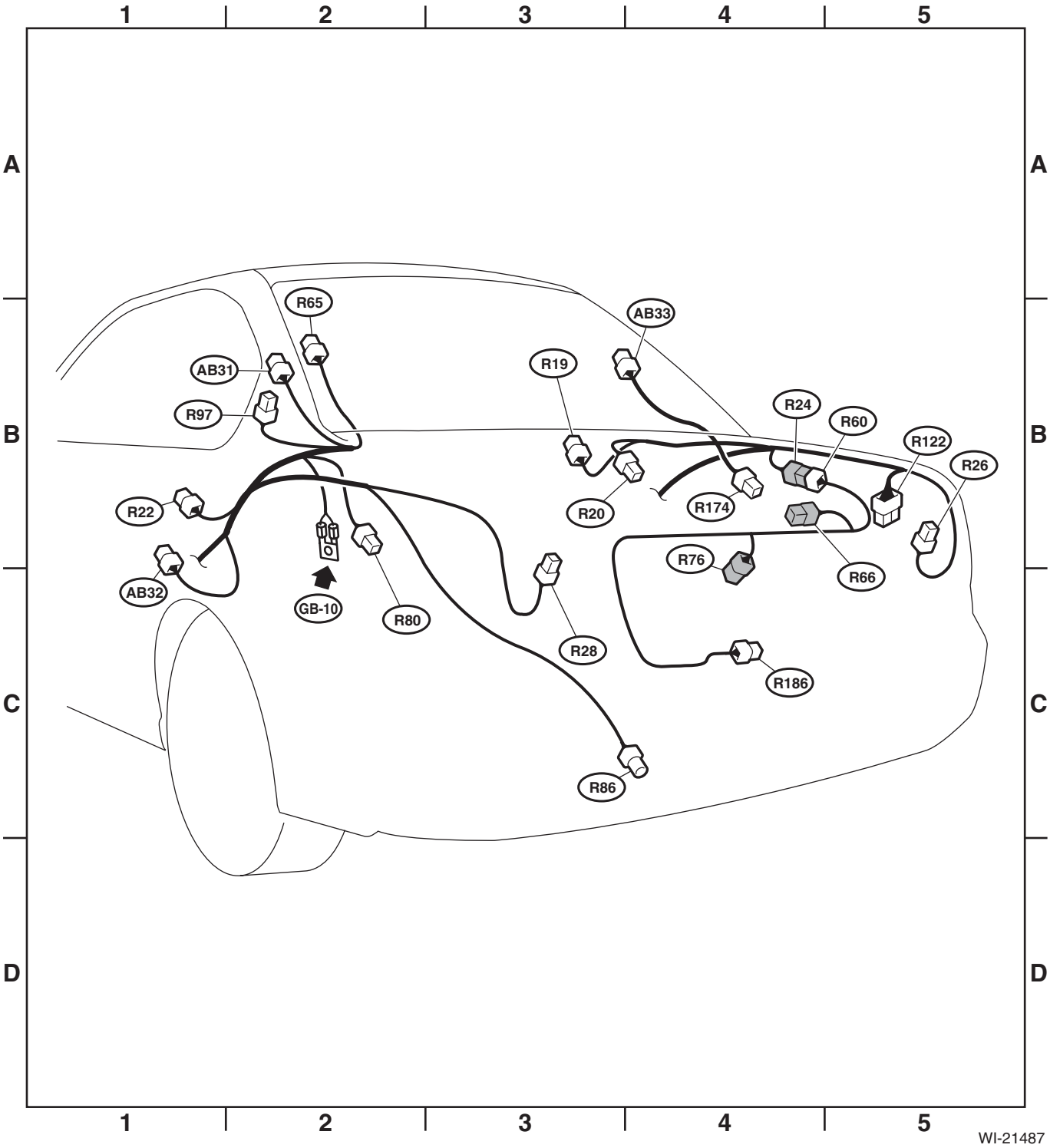

61.Rear Wiring Harness and Rear Gate Cord

A: LOCATION

Connector				Connecting to	
No.	Pole	Color	Area	No.	Description
R22	3	★	C-1		Rear door switch LH
R26	4	Light gray	C-5		Rear combination light RH
R28	4	Light gray	C-2		Rear combination light LH
R38	8	★	C-4	D34	Rear gate cord
R39	14	★	B-4	D35	
R80	8	★	C-1		Keyless entry control module
R86	2	Black	C-3		Drain valve
R97	1	★	C-2		Antenna amplifier
R122	10	Black	C-4		Fuel pump control unit
R141	2	Gray	C-2		Luggage room light
★: White or natural color					

Connector				Connecting to	
No.	Pole	Color	Area	No.	Description
D34	8	★	B-4	R38	Rear wiring harness RH
D35	14	★	B-4	R39	
D39	2	★	B-3		High-mounted stop light
D43	4	★	B-4		Rear wiper motor
D44	2	★	B-4		License plate light RH
D46	4	★	A-4		Rear gate lock actuator & latch switch
D47	2	★	A-4		Rear gate opener button
D48	1	★	B-3		Rear defogger (–)
D58	2	★	B-5		Back-up light RH
D59	2	★	A-3		Back-up light LH
D89	1	★	B-4		Rear defogger (+)
D137	2	★	B-4		License plate light LH
★: White or natural color					

Connector				Connecting to	
No.	Pole	Color	Area	No.	Description
AB31	2	Black	C-2		Curtain airbag module LH
AB32	4	Yellow	C-1		Curtain airbag sensor LH
AB33	2	Black	C-4		Curtain airbag module RH
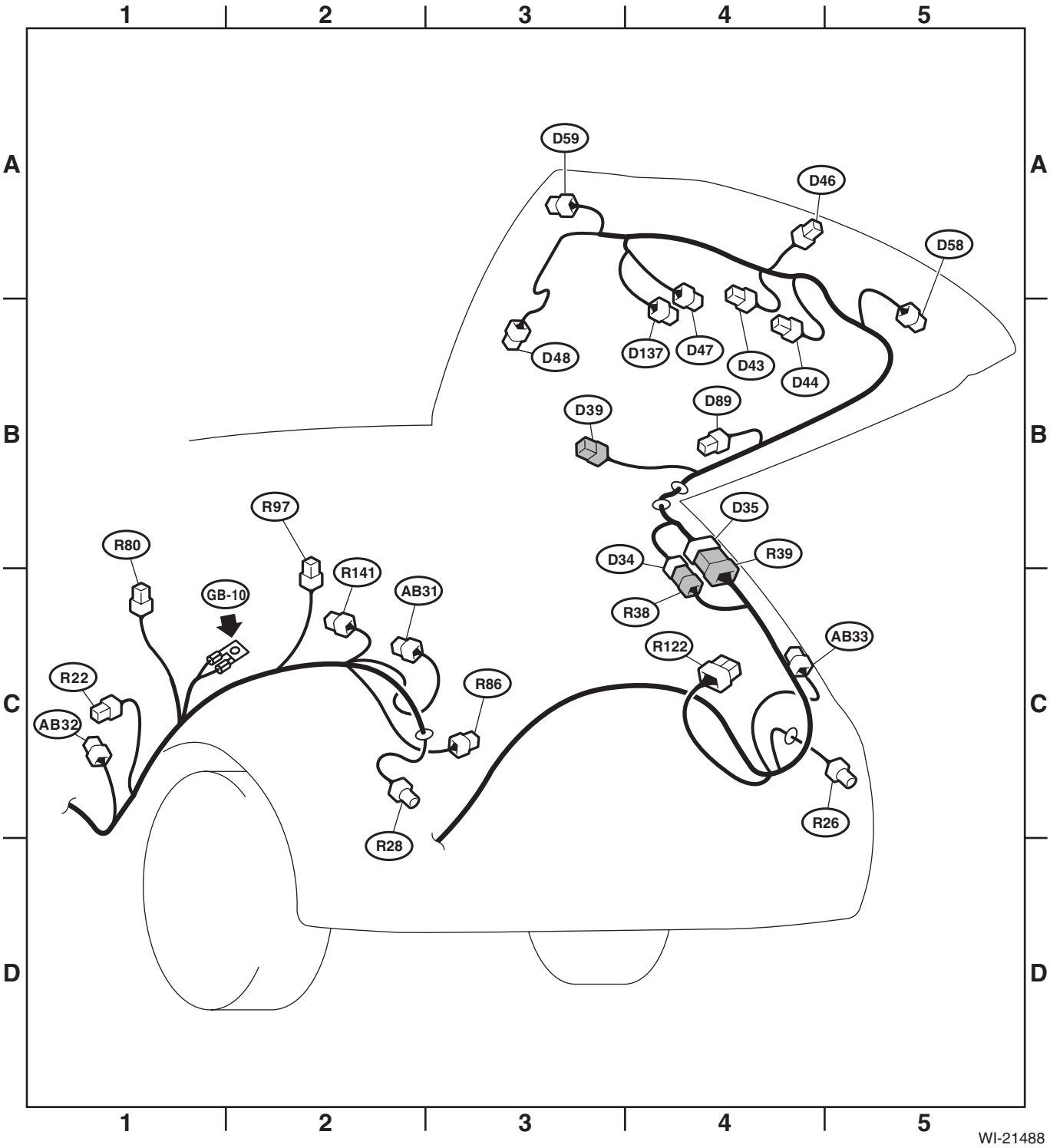
Rear Wiring Harness and Rear Gate Cord