REAR AXLE CARRIER

COMPONENTS

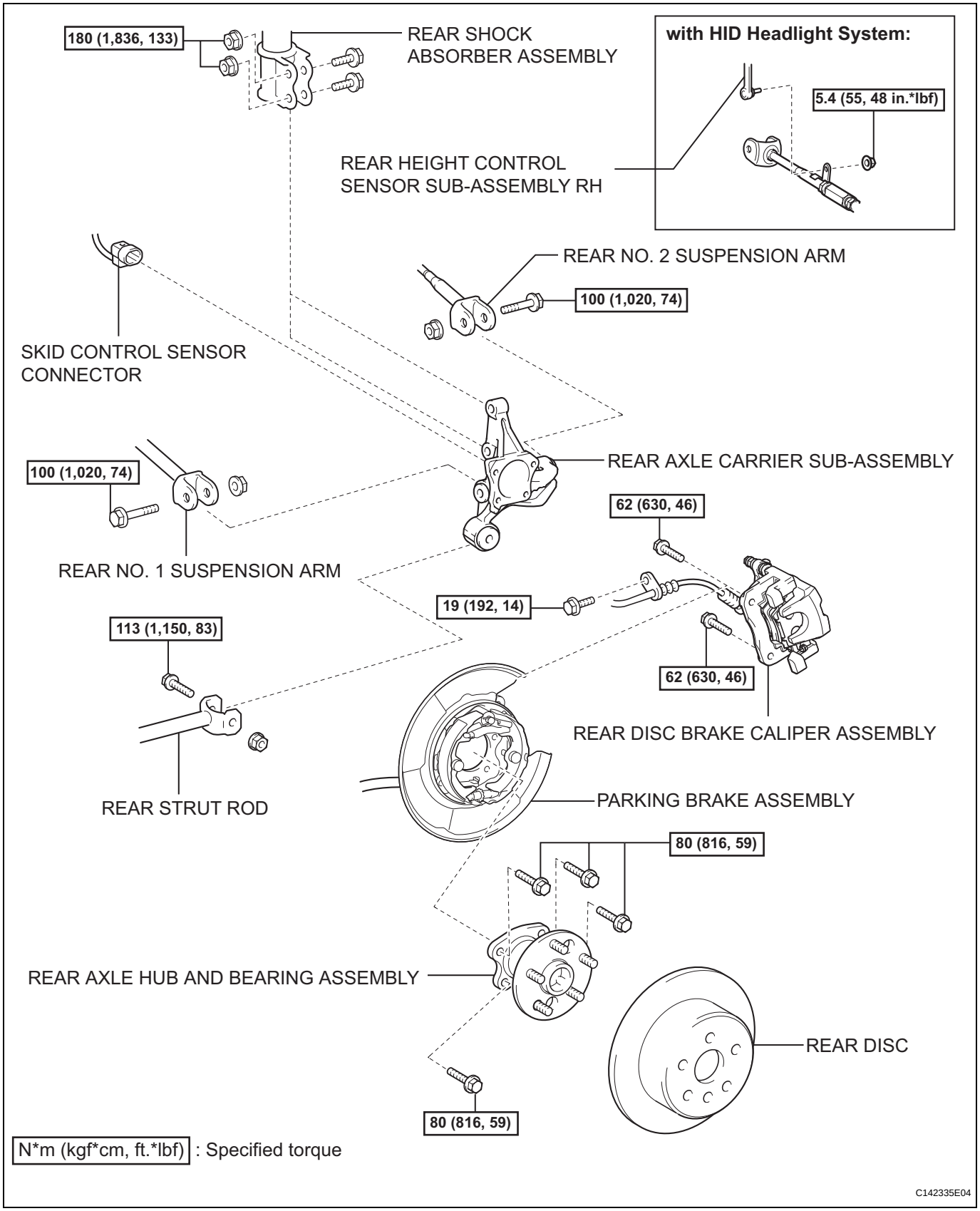

AH

REMOVAL

1. REMOVE REAR WHEEL

2. SEPARATE REAR DISC BRAKE CALIPER ASSEMBLY

(a) Remove the bolt and separate the flexible hose from the shock absorber.

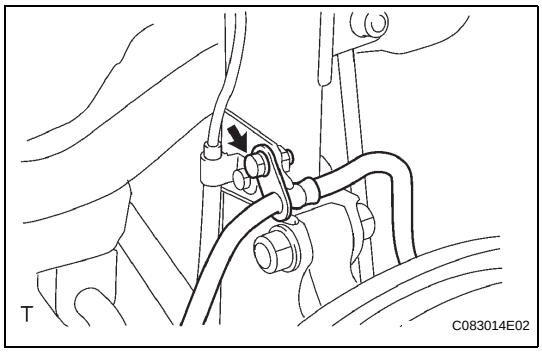

(b) Remove the 2 bolts and separate the rear disc brake caliper assembly.

NOTICE:
Use wire or an equivalent tool to keep the brake caliper from hanging by its flexible hose.

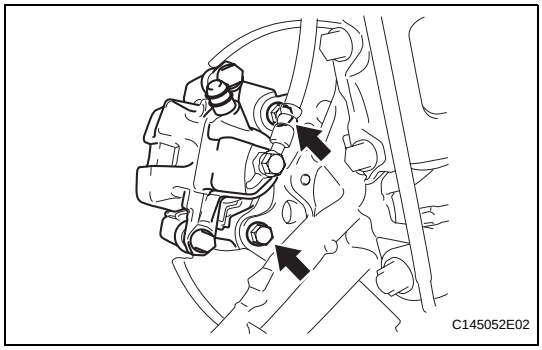

3. REMOVE REAR DISC (See page PB-38)

4. DISCONNECT SKID CONTROL SENSOR CONNECTOR (See page BC-192)

5. REMOVE REAR AXLE HUB AND BEARING ASSEMBLY (See page AH-15)

6. SEPARATE REAR HEIGHT CONTROL SENSOR SUB-ASSEMBLY RH (w/ HID Headlight System)

HINT:
Perform the procedure only when removing the RH side.
(See page SP-60)

7. SEPARATE REAR STRUT ROD

(a) Remove the bolt and nut, and separate the rear strut rod (rear axle carrier side) from the rear axle carrier sub-assembly.

HINT:
When removing the bolt, keep the nut from rotating.

8. SEPARATE REAR NO. 2 SUSPENSION ARM

(a) Remove the bolt and nut, and separate the rear No. 2 suspension arm (rear axle carrier side) from the rear axle carrier sub-assembly.

HINT:
When removing the bolt, keep the nut from rotating.

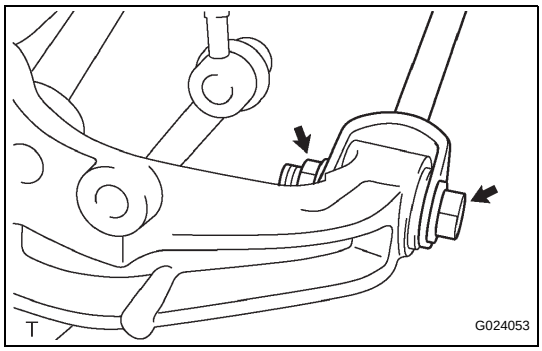

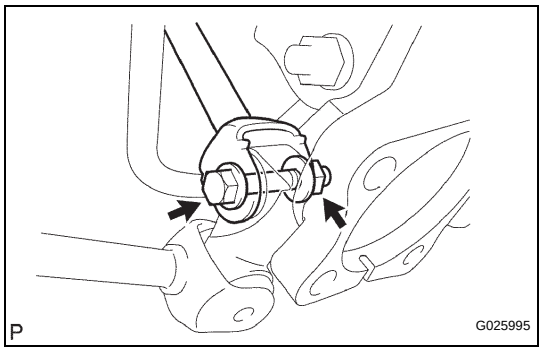

9. SEPARATE REAR NO. 1 SUSPENSION ARM

(a) Remove the bolt and nut, and separate the rear No. 1 suspension arm (rear axle carrier side) from the rear axle carrier sub-assembly.
HINT:
When removing the bolt, keep the nut from rotating.

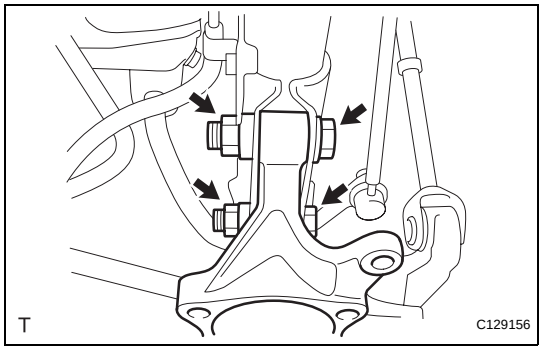

10. REMOVE REAR AXLE CARRIER SUB-ASSEMBLY

(a) Remove the 2 bolts and 2 nuts, and remove the rear axle carrier sub-assembly from the shock absorber.

INSTALLATION

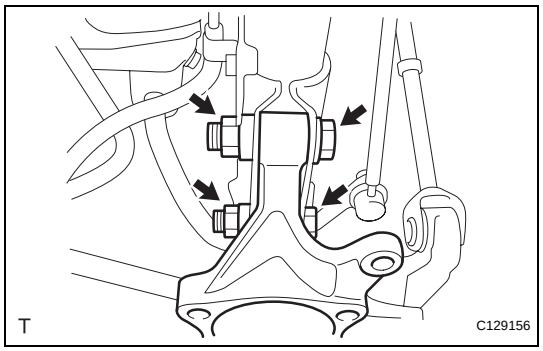

1. INSTALL REAR AXLE CARRIER SUB-ASSEMBLY

(a) Install the rear axle carrier sub-assembly to the shock absorber with the 2 bolts and 2 nuts.
Torque: 180 N*m (1,836 kgf*cm, 133 ft.*lbf)

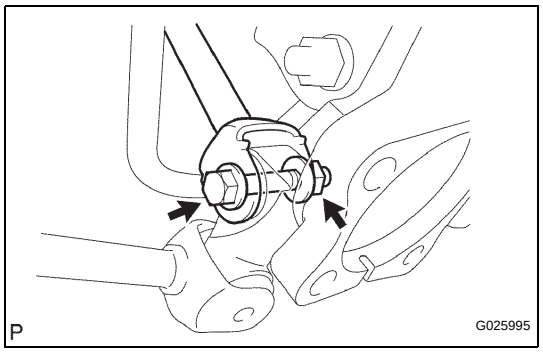

2. TEMPORARILY TIGHTEN REAR NO. 1 SUSPENSION ARM

(a) Temporarily tighten the rear No. 1 suspension arm with the bolt and nut.
HINT:
Insert the bolt from the rear side of the vehicle and temporarily tighten the bolt.

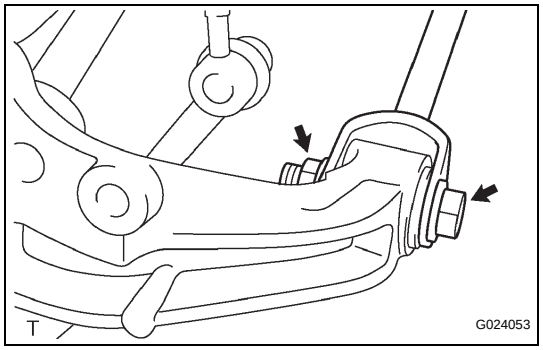

3. TEMPORARILY TIGHTEN REAR NO. 2 SUSPENSION ARM

(a) Temporarily tighten the rear No. 2 suspension arm with the bolt and nut.
HINT:
Insert the bolt from the rear side of the vehicle and temporarily tighten the bolt.

4. TEMPORARILY TIGHTEN REAR STRUT ROD

(a) Temporarily tighten the rear strut rod with the bolt and nut.
HINT:
Insert the bolt from the inside of the vehicle and temporarily tighten the bolt.

5. INSTALL REAR AXLE HUB AND BEARING ASSEMBLY (See page AH-16)

6. INSPECT REAR AXLE HUB BEARING LOOSENESS (See page AH-15)

7. INSPECT REAR AXLE HUB RUNOUT (See page AH-15)

8. INSTALL REAR DISC (See page PB-43)

9. INSTALL REAR DISC BRAKE CALIPER ASSEMBLY

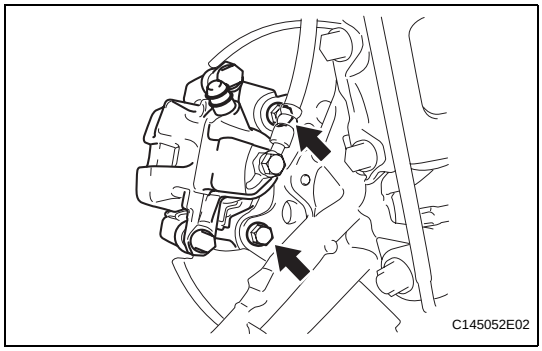

(a) Install the rear disc brake caliper with the 2 bolts.
Torque: 62 N*m (630 kgf*cm, 46 ft.*lbf)
NOTICE:
Do not twist the brake hose when installing the rear disc brake caliper assembly LH.

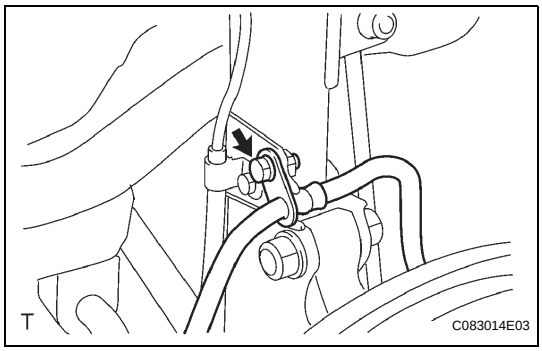

(b) Install the rear flexible hose with the bolt.
Torque: 19 N*m (192 kgf*cm, 14 ft.*lbf)

10. INSTALL REAR WHEEL
Torque: 103 N*m (1,050 kgf*cm, 76 ft.*lbf)

11. STABILIZE SUSPENSION (See page SP-48)

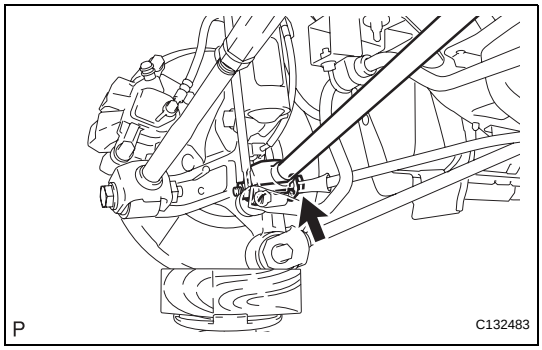

12. FULLY TIGHTEN REAR NO. 1 SUSPENSION ARM

(a) Fully tighten the bolt.
Torque: 100 N*m (1,020 kgf*cm, 74 ft.*lbf)

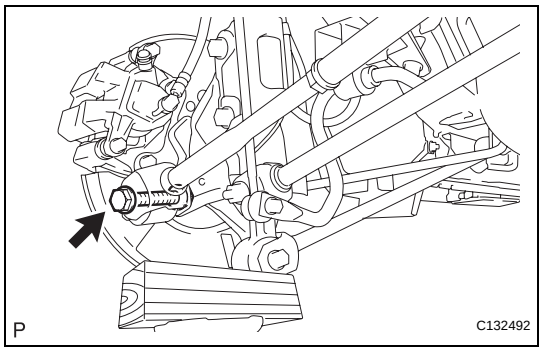

13. FULLY TIGHTEN REAR NO. 2 SUSPENSION ARM

(a) Fully tighten the bolt.
Torque: 100 N*m (1,020 kgf*cm, 74 ft.*lbf)

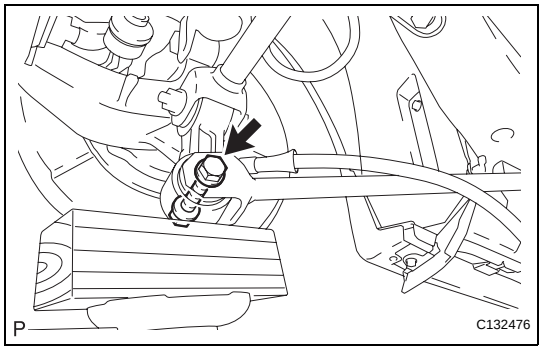

14. FULLY TIGHTEN REAR STRUT ROD

(a) Fully tighten the bolt.
Torque: 113 N*m (1,150 kgf*cm, 83 ft.*lbf)

15. CONNECT SKID CONTROL SENSOR CONNECTOR (See page BC-194)

16. INSTALL REAR HEIGHT CONTROL SENSOR SUB-ASSEMBLY RH (w/ HID Headlight System)

HINT:
Perform the procedure only when installing the RH side.
(See page SP-62)

17. ADJUST REAR WHEEL ALIGNMENT

HINT:
See page SP-11

18. CHECK ABS SPEED SENSOR SIGNAL

HINT:
See page BC-24

19. HEIGHT CONTROL SENSOR SIGNAL INITIALIZATION (w/ HID Headlight System)

HINT:
See page LI-30

REMOVAL

HINT:
- Use the same procedures for the RH side and LH side.
- The procedures listed below are for the LH side.

1. **REMOVE REAR WHEEL**
2. **SEPARATE REAR DISC BRAKE CALIPER ASSEMBLY (See page AH-18)**
3. **REMOVE REAR DISC (See page PB-38)**
4. **DISCONNECT SKID CONTROL SENSOR CONNECTOR (See page BC-192)**
5. **REMOVE REAR AXLE HUB AND BEARING ASSEMBLY**
   (a) Disconnect the skid control sensor connector.
   (b) Remove the 4 bolts and hub and bearing assembly.

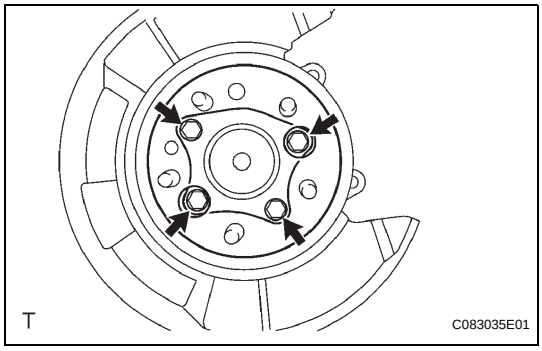

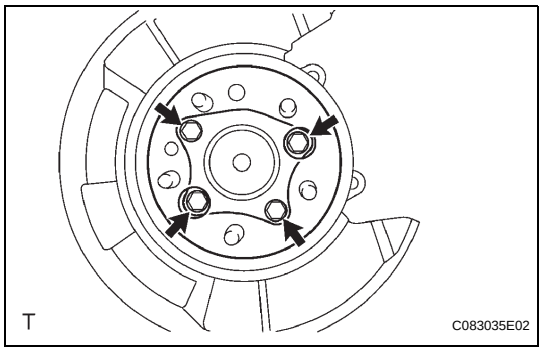

INSTALLATION

1. **INSTALL REAR AXLE HUB AND BEARING ASSEMBLY**
   (a) Install the hub and bearing assembly with the 4 bolts.
   Torque: 80 N*m (816 kgf*cm, 59 ft.*lbf)
   (b) Connect the skid control sensor connector.
   NOTICE:
   Do not twist the sensor wire when connecting it.
2. **INSPECT REAR AXLE HUB BEARING LOOSENESS (See page AH-15)**
3. **INSPECT REAR AXLE HUB RUNOUT (See page AH-15)**
4. **INSTALL REAR DISC (See page PB-43)**
5. **INSTALL REAR DISC BRAKE CALIPER ASSEMBLY (See page AH-20)**
6. **CONNECT SKID CONTROL SENSOR CONNECTOR (See page BC-194)**
7. **INSTALL REAR WHEEL**
   Torque: 103 N*m (1,050 kgf*cm, 76 ft.*lbf)
8. **CHECK ABS SPEED SENSOR SIGNAL**
   HINT:
   See page BC-24

REAR AXLE HUB AND BEARING

COMPONENTS

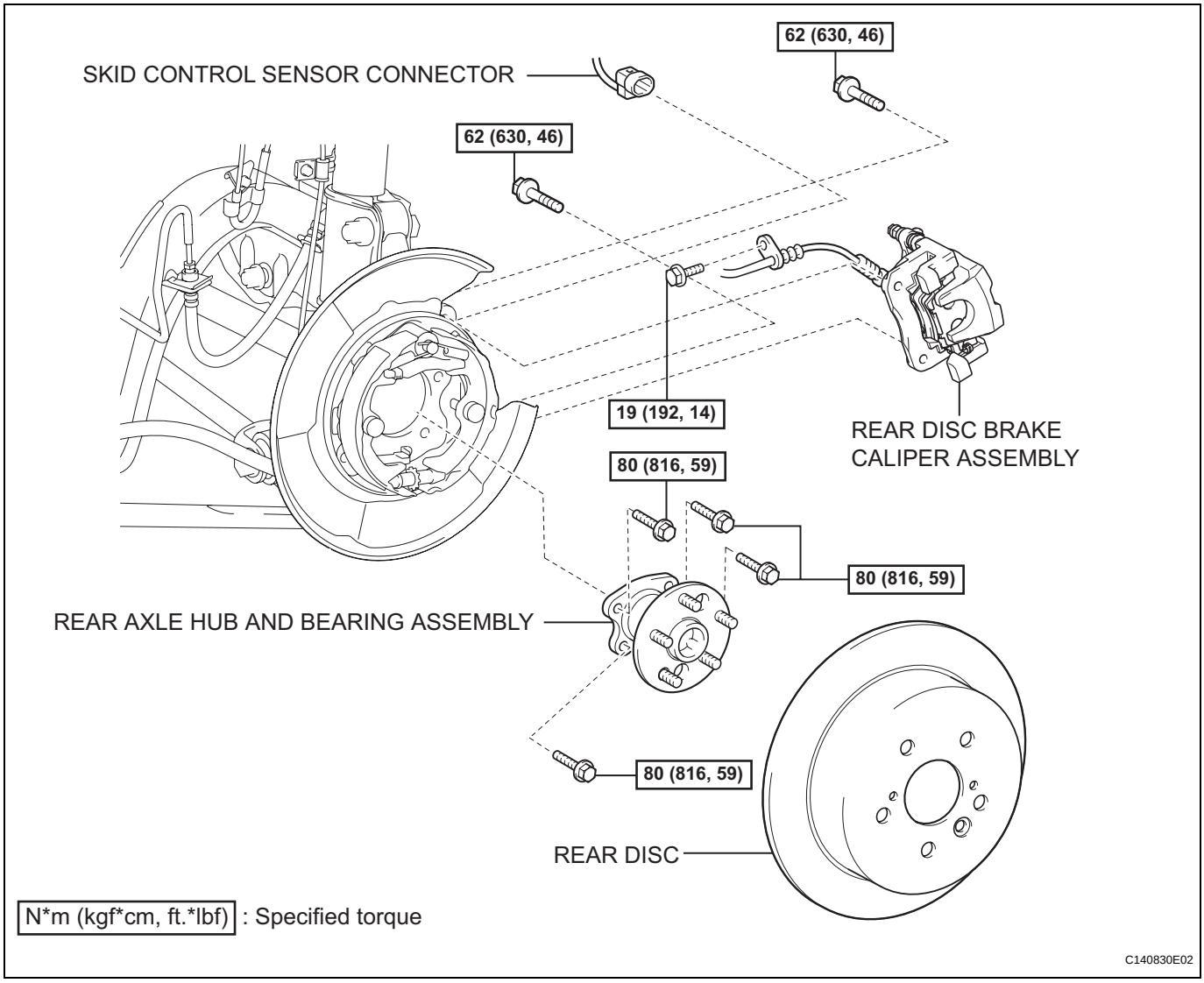

ON-VEHICLE INSPECTION

1. **REMOVE REAR WHEEL**
2. **SEPARATE REAR DISC BRAKE CALIPER ASSEMBLY (See page AH-18)**
3. **REMOVE REAR DISC (See page BR-37)**
4. **INSPECT REAR AXLE HUB BEARING LOOSENESS**
   (a) Using a dial indicator, check for looseness near the center of the axle hub.
   Maximum:
   0.05 mm (0.0020 in.)
   NOTICE:
   Ensure that the dial indicator is set perpendicular to the measurement surface.
   If looseness exceeds the maximum, replace the axle hub assembly.

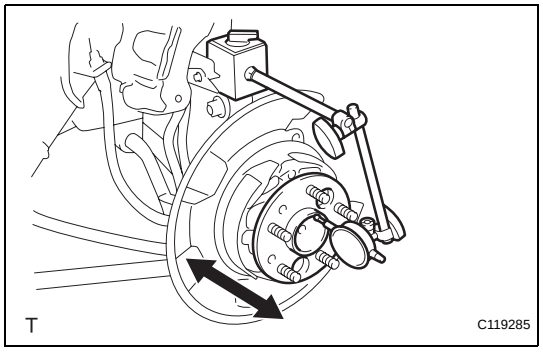

5. **INSPECT REAR AXLE HUB RUNOUT**
   (a) Using a dial indicator, check for runout on the surface of the axle hub outside the hub bolt.
   Maximum:
   0.07 mm (0.0027 in.)
   NOTICE:
   Ensure that the dial indicator is set perpendicular to the measurement surface.
   If runout exceeds the maximum, replace the axle hub assembly.

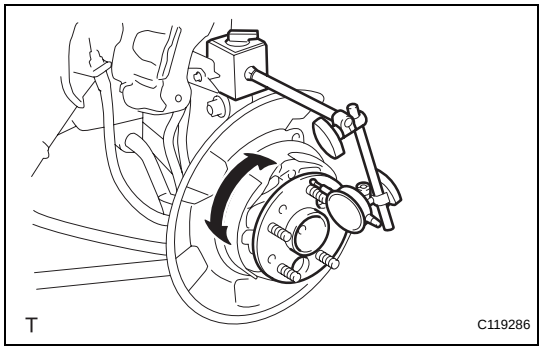

6. **INSTALL REAR DISC (See page PB-43)**
7. **INSTALL REAR DISC BRAKE CALIPER ASSEMBLY (See page AH-20)**
8. **INSTALL REAR WHEEL**
   Torque: 103 N*m (1,050 kgf*cm, 76 ft.*lbf)

REAR AXLE HUB BOLT

COMPONENTS

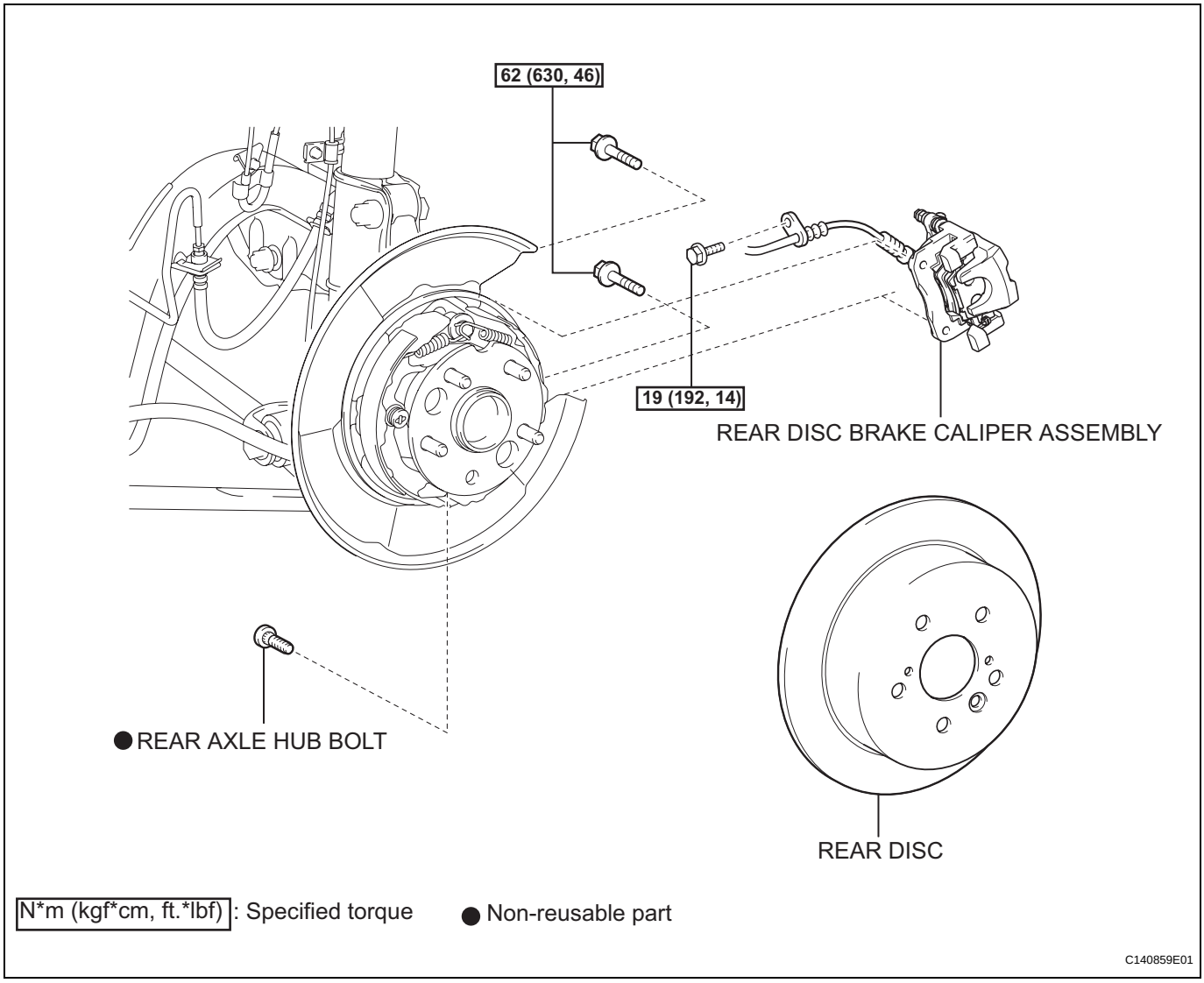

REPLACEMENT

1. **REMOVE REAR WHEEL**
2. **REMOVE REAR DISC BRAKE CALIPER ASSEMBLY (See page AH-18)**
3. **REMOVE REAR DISC (See page PB-38)**
4. **REMOVE REAR AXLE HUB BOLT**
   (a) Temporarily install the 2 nuts and washers to the rear axle hub bolt as shown in the illustration.
   (b) Using SST and a brass bar or a similar tool to hold the hub and bearing assembly, remove the rear axle hub bolt.
   SST 09628-10011

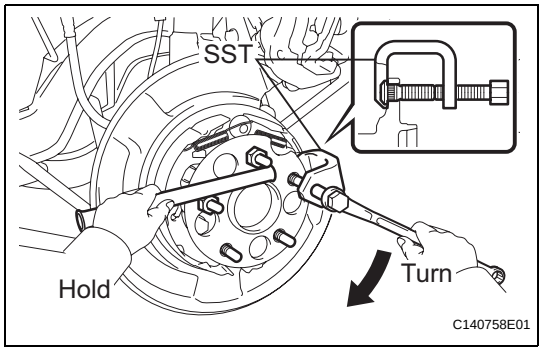

5. **INSTALL REAR AXLE HUB BOLT**
   (a) Install a washer and nut to a new bolt as shown in the illustration.
   (b) Using a brass bar or a similar tool to hold the hub and bearing assembly, install the rear axle hub bolt by tightening the nut.

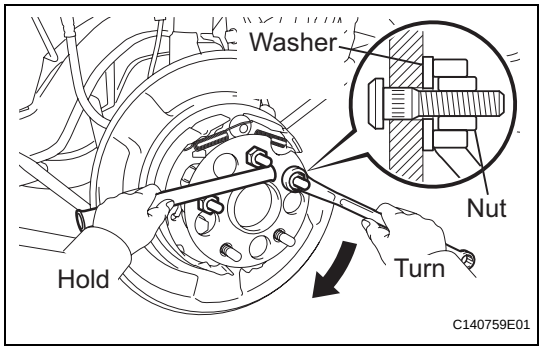

6. **INSTALL REAR DISC (See page PB-43)**
7. **INSTALL REAR DISC BRAKE CALIPER ASSEMBLY (See page AH-20)**
8. **INSTALL REAR WHEEL**
   Torque: 103 N*m (1,050 kgf*cm, 76 ft.*lbf)

ON-VEHICLE INSPECTION

1. **REMOVE FRONT WHEEL**
2. **SEPARATE FRONT DISC BRAKE CALIPER ASSEMBLY (See page AH-6)**
3. **REMOVE FRONT DISC (See page BR-37)**
4. **INSPECT FRONT AXLE HUB BEARING LOOSENESS**
   (a) Using a dial indicator, check for looseness near the center of the axle hub.
   Maximum:
   0.05 mm (0.0020 in.)
   NOTICE:
   Ensure that the dial indicator is set perpendicular to the measurement surface.
   HINT:
   If looseness exceeds the maximum, replace the bearing.

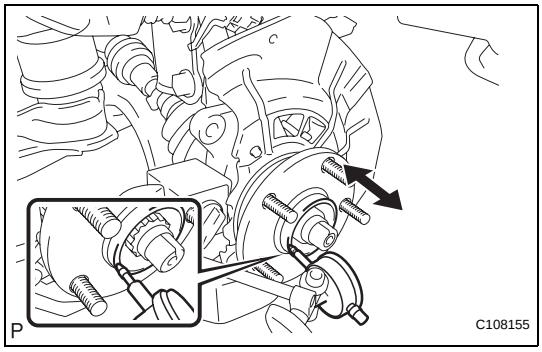

5. **INSPECT FRONT AXLE HUB RUNOUT**
   (a) Using a dial indicator, check for runout on the surface of the axle hub outside the hub bolt.
   Maximum:
   0.05 mm (0.0020 in.)
   NOTICE:
   Ensure that the dial indicator is set perpendicular to the measurement surface.
   HINT:
   If runout exceeds the maximum, replace the axle hub.

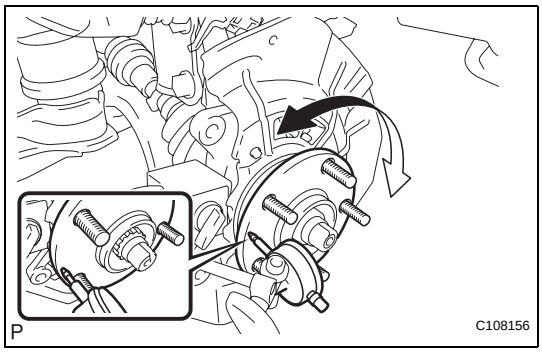

6. **INSTALL FRONT DISC (See page BR-39)**
7. **INSTALL FRONT DISC BRAKE CALIPER ASSEMBLY (See page AH-10)**
8. **INSTALL FRONT WHEEL**
   Torque: 103 N*m (1,050 kgf*cm, 76 ft.*lbf)

REMOVAL

HINT:
- Use the same procedures for the RH side and LH side.
- The procedures listed below are for the LH side.

1. REMOVE FRONT WHEEL

2. REMOVE FRONT AXLE HUB NUT (See page DS-5)

3. SEPARATE FRONT SPEED SENSOR (See page DS-5)

4. SEPARATE FRONT DISC BRAKE CALIPER ASSEMBLY

(a) Remove the 2 bolts and separate the front disc brake caliper assembly from the steering knuckle.
NOTICE:
Use wire or an equivalent tool to keep the brake caliper from hanging by its flexible hose.

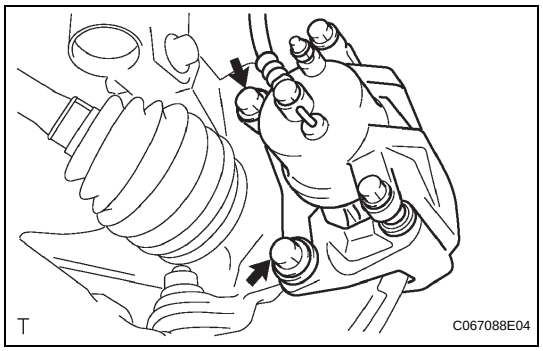

5. REMOVE FRONT DISC (See page BR-37)

6. SEPARATE TIE ROD END SUB-ASSEMBLY (See page DS-6)

7. SEPARATE FRONT SUSPENSION LOWER NO. 1 ARM (See page DS-6)

8. REMOVE FRONT AXLE ASSEMBLY

(a) Put matchmarks on the front drive shaft assembly and the front axle hub sub-assembly.

(b) Using a plastic hammer, separate the front drive shaft assembly from the front axle assembly.
NOTICE:
Be careful not to damage the drive shaft boot or speed sensor rotor.

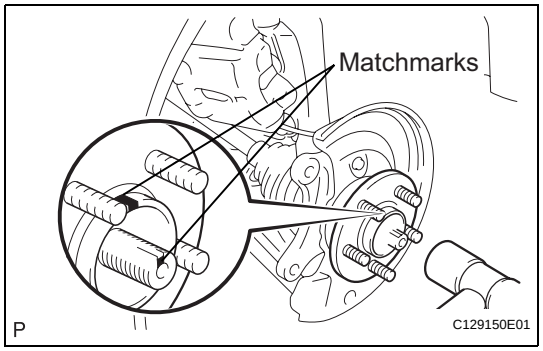

(c) Remove the 2 bolts, 2 nuts, and front axle assembly.

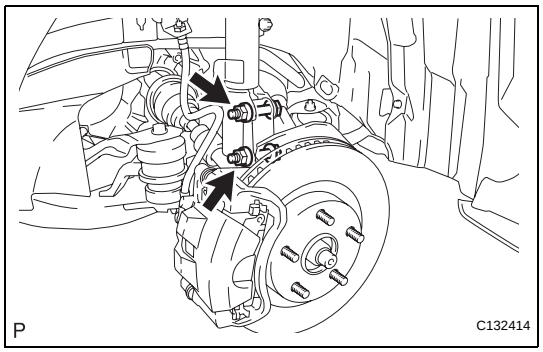

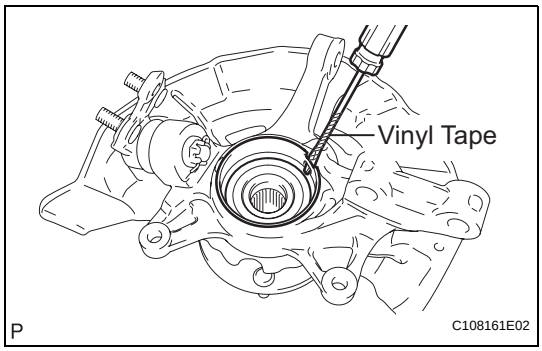

9. REMOVE NO. 1 FRONT WHEEL BEARING DUST DEFLECTOR

(a) Using a screwdriver with its tip wrapped with vinyl tape, remove the No. 1 front wheel bearing dust deflector.
NOTICE:
Be careful not to damage the steering knuckle.

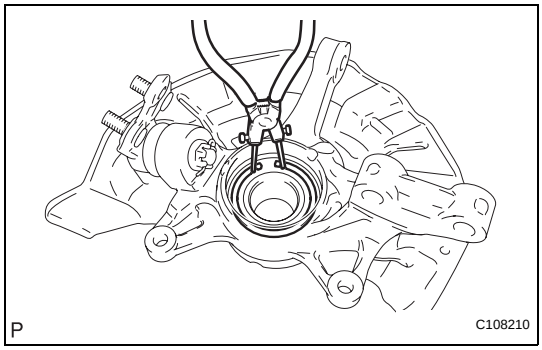

10. REMOVE FRONT AXLE HUB HOLE SNAP RING

(a) Using snap ring pliers, remove the front axle hub hole snap ring.

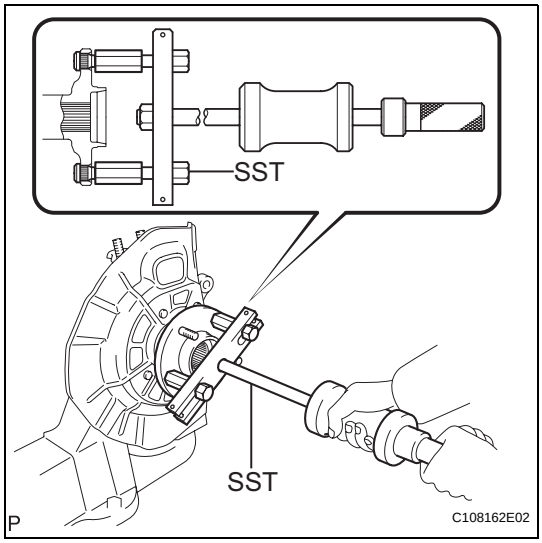

11. REMOVE FRONT AXLE HUB SUB-ASSEMBLY

(a) Hold the front axle assembly between aluminium plates in a vise.
NOTICE:
Do not overtighten the vise.

(b) Using SST, remove the front axle hub sub-assembly.
SST 09520-00031

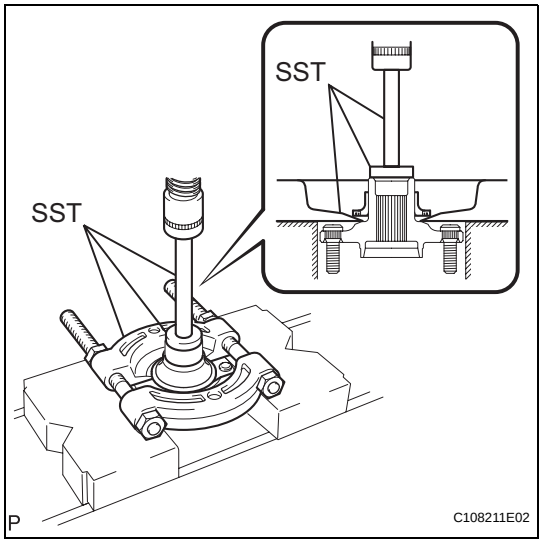

(c) Using SST and a press, remove the bearing inner race (outside) from the front axle hub sub-assembly.
SST 09555-55010, 09950-60010 (09951-00430), 09950-70010 (09951-07100)
NOTICE:
Be careful not to drop the front axle hub sub-assembly.

12. REMOVE FRONT DISC BRAKE DUST COVER

(a) Remove the 4 bolts and disc brake dust cover from the steering knuckle.

13. REMOVE FRONT LOWER BALL JOINT ASSEMBLY
(See page SP-25)

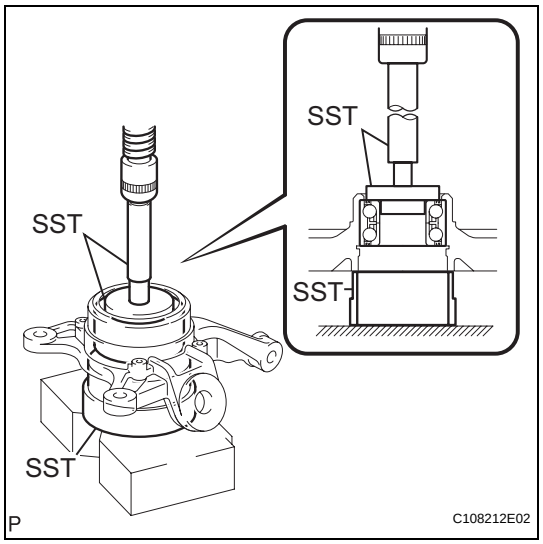

14. REMOVE FRONT AXLE HUB BEARING

(a) Place the bearing inner race (outside) on the front axle hub bearing.

(b) Using SST and a press, press the front axle hub bearing until it contacts the SST.

SST 09527-17011, 09950-60010 (09951-00600, 09951-00400, 09952-06010), 09950-70010 (09951-07100)

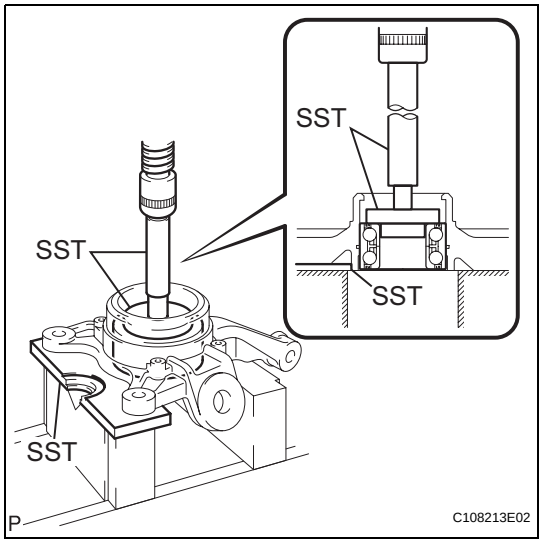

(c) Using SST, support the steering knuckle horizontally. Place it on the V-blocks as shown in the illustration.

SST 09527-20011, 09950-60010 (09951-00600, 09951-00400, 09952-06010), 09950-70010 (09951-07100)

(d) Using SST and a press, remove the front axle hub bearing from the steering knuckle.

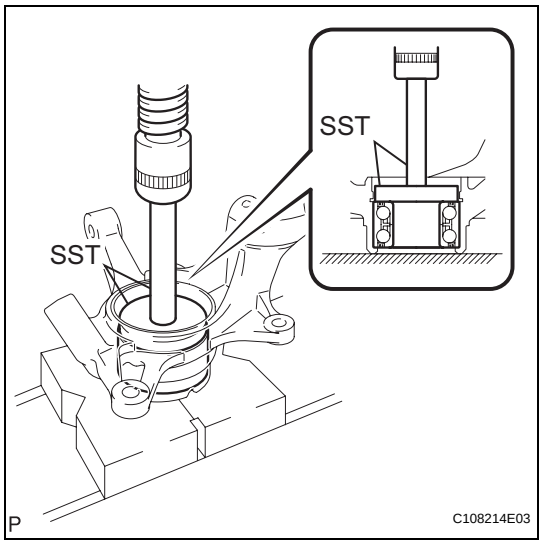

INSTALLATION

1. INSTALL FRONT AXLE HUB BEARING

(a) Using SST and a press, install a new front axle hub bearing to the steering knuckle.

SST 09950-60020 (09951-00810), 09950-70010 (09951-07100)

2. INSTALL FRONT LOWER BALL JOINT ASSEMBLY (See page SP-26)

3. INSTALL FRONT DISC BRAKE DUST COVER

(a) Install the disc brake dust cover to the steering knuckle with the 4 bolts.

Torque: 8.3 N*m (85 kgf*cm, 73 in.*lbf)

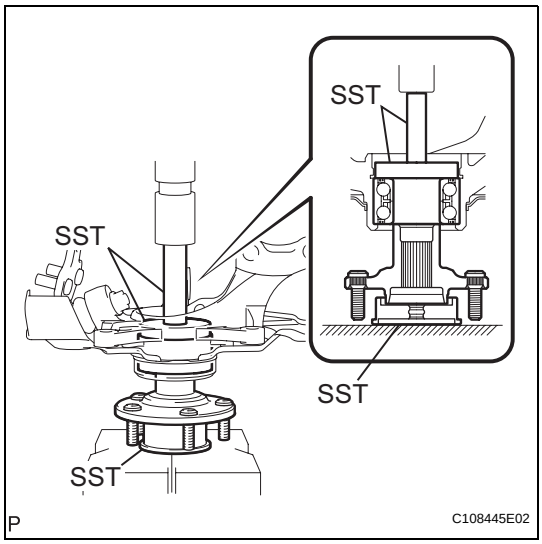

4. INSTALL FRONT AXLE HUB SUB-ASSEMBLY

(a) Using SST and a press, install the front axle hub sub-assembly.

SST 09608-32010, 09950-60020 (09951-00810), 09950-70010 (09951-07100)

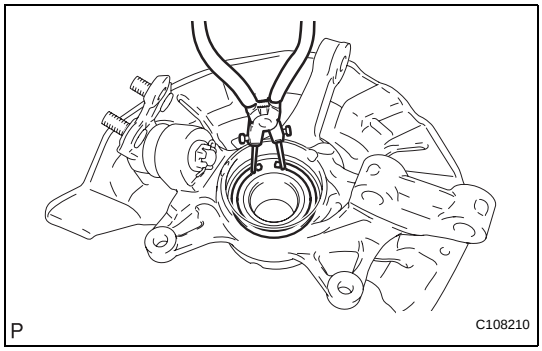

5. INSTALL FRONT AXLE HUB HOLE SNAP RING

(a) Using snap ring pliers, install a new front axle hub hole snap ring.

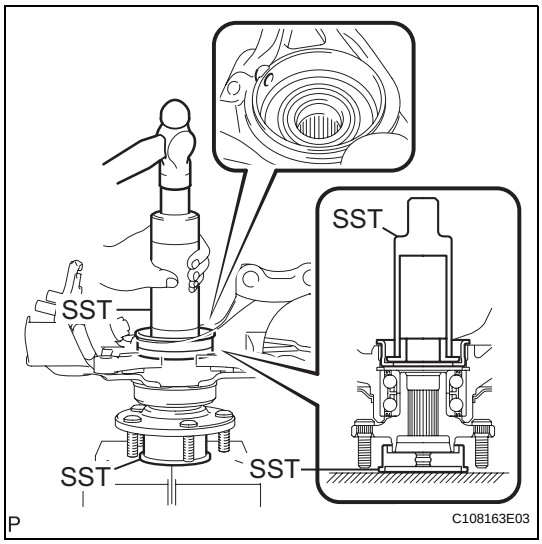

6. INSTALL NO. 1 FRONT WHEEL BEARING DUST DEFLECTOR

(a) Using SST and a hammer, install a new No. 1 front wheel bearing dust deflector.

SST 09316-60011 (09316-00011, 09316-00031), 09608-32010

HINT:

Align the hole for the speed sensor in the No. 1 front wheel bearing dust deflector with the steering knuckle.

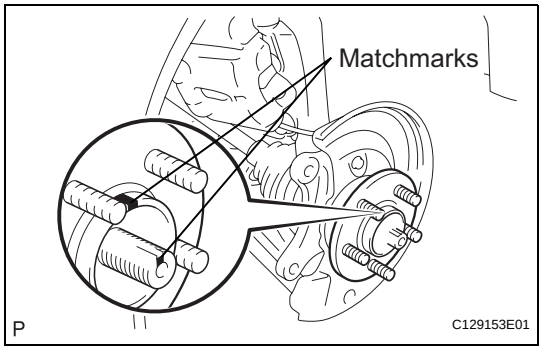

7. INSTALL FRONT AXLE ASSEMBLY

(a) Align the matchmarks and install the front drive shaft assembly to the front axle hub sub-assembly.

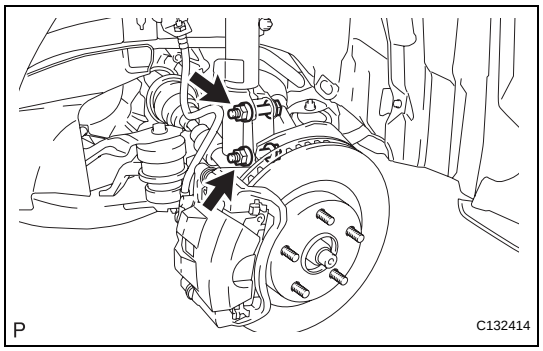

(b) Install the steering knuckle with the front axle assembly to the front shock absorber with the 2 bolts and 2 nuts.
Torque: 210 N*m (2,140 kgf*cm, 155 ft.*lbf)
NOTICE:
- **If the bolts and nuts are reused, apply a small amount of engine oil to the threads of the nuts.**
- **Be careful not to damage the drive shaft boot or speed sensor rotor.**

8. INSTALL FRONT SUSPENSION LOWER NO. 1 ARM (See page DS-16)

9. INSTALL TIE ROD END SUB-ASSEMBLY (See page DS-16)

10. INSTALL FRONT DISC (See page BR-39)

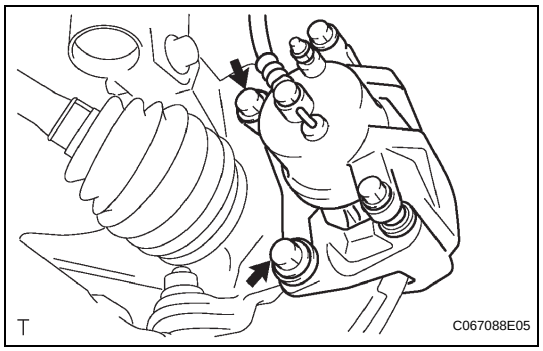

11. INSTALL FRONT DISC BRAKE CALIPER ASSEMBLY
(a) Install the front disc brake caliper assembly to the steering knuckle with the 2 bolts.
Torque: 107 N*m (1,090 kgf*cm, 79 ft.*lbf)
NOTICE:
Do not twist the brake hose when installing the front disc brake caliper assembly.

12. INSTALL FRONT AXLE HUB NUT
(a) Using a socket wrench (30 mm), install a new axle hub nut.
Torque: 294 N*m (3,000 kgf*cm, 217 ft.*lbf)
HINT:
Stake the nut after inspecting for looseness and runout in the following steps.

13. SEPARATE FRONT DISC BRAKE CALIPER ASSEMBLY
(a) Remove the 2 bolts and separate the front disc brake caliper assembly from the steering knuckle.
NOTICE:
Use wire or an equivalent tool to keep the brake caliper from hanging by its flexible hose.

14. REMOVE FRONT DISC (See page BR-37)

15. INSPECT FRONT AXLE HUB BEARING LOOSENESS (See page AH-5)

16. INSPECT FRONT AXLE HUB RUNOUT (See page AH-6)

17. INSTALL FRONT DISC (See page BR-39)

18. INSTALL FRONT DISC BRAKE CALIPER ASSEMBLY
(a) Install the front disc brake caliper assembly to the steering knuckle with the 2 bolts.
Torque: 107 N*m (1,090 kgf*cm, 79 ft.*lbf)
NOTICE:
Do not twist the brake hose when installing the front disc brake caliper assembly.

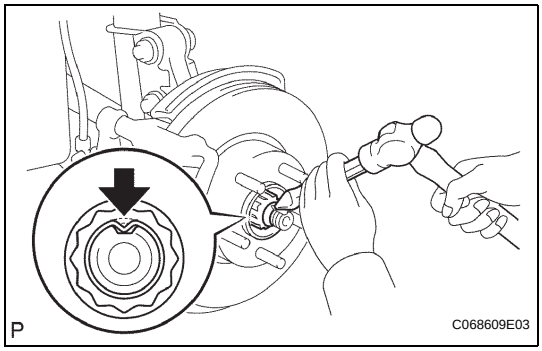

19. INSTALL FRONT SPEED SENSOR (See page DS-17)

20. INSTALL FRONT AXLE HUB NUT

(a) Using a chisel and hammer, stake the axle hub nut.

21. INSTALL FRONT WHEEL

Torque: 103 N*m (1,050 kgf*cm, 76 ft.*lbf)

22. ADJUST FRONT WHEEL ALIGNMENT

HINT:

See page SP-4

23. CHECK ABS SPEED SENSOR SIGNAL

HINT:

See page BC-24

FRONT AXLE HUB

COMPONENTS

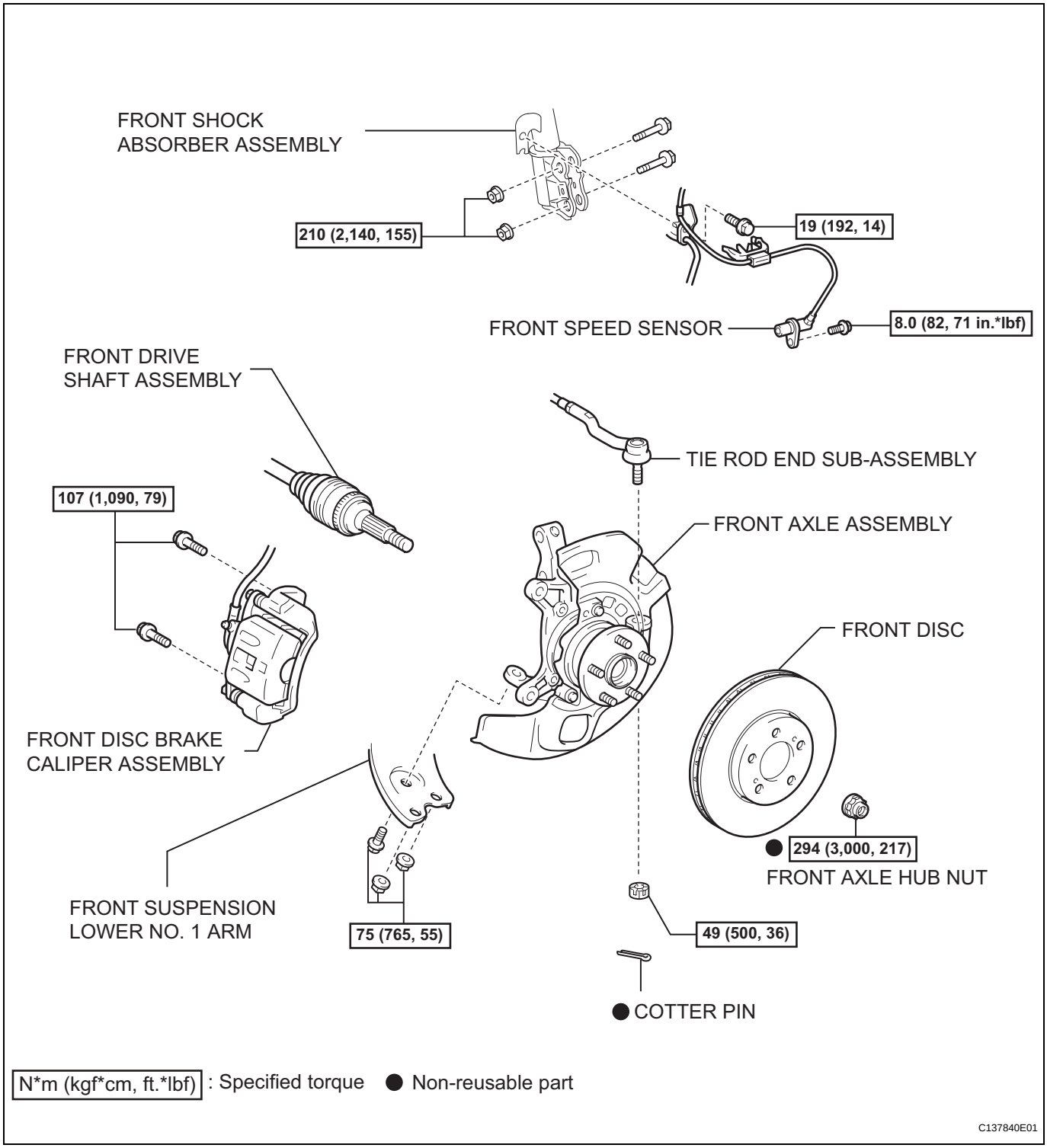

AH

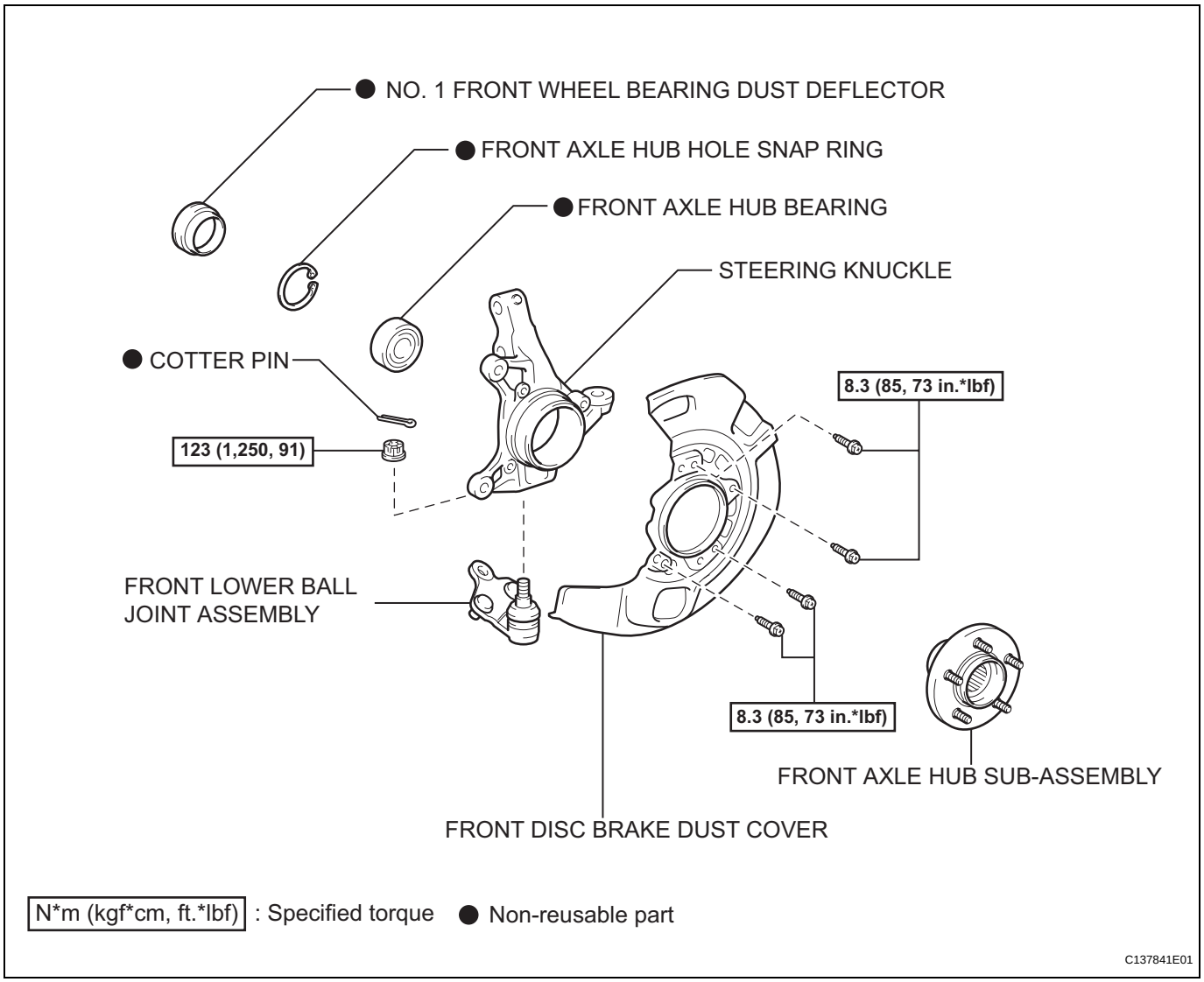
● NO. 1 FRONT WHEEL BEARING DUST DEFLECTOR
● FRONT AXLE HUB HOLE SNAP RING
● FRONT AXLE HUB BEARING
STEERING KNUCKLE
● COTTER PIN
123 (1,250, 91)
8.3 (85, 73 in.*lbf)
FRONT LOWER BALL JOINT ASSEMBLY
8.3 (85, 73 in.*lbf)
FRONT AXLE HUB SUB-ASSEMBLY
FRONT DISC BRAKE DUST COVER
N*m (kgf*cm, ft.*lbf) : Specified torque
● Non-reusable part
C137841E01

FRONT AXLE HUB BOLT

COMPONENTS

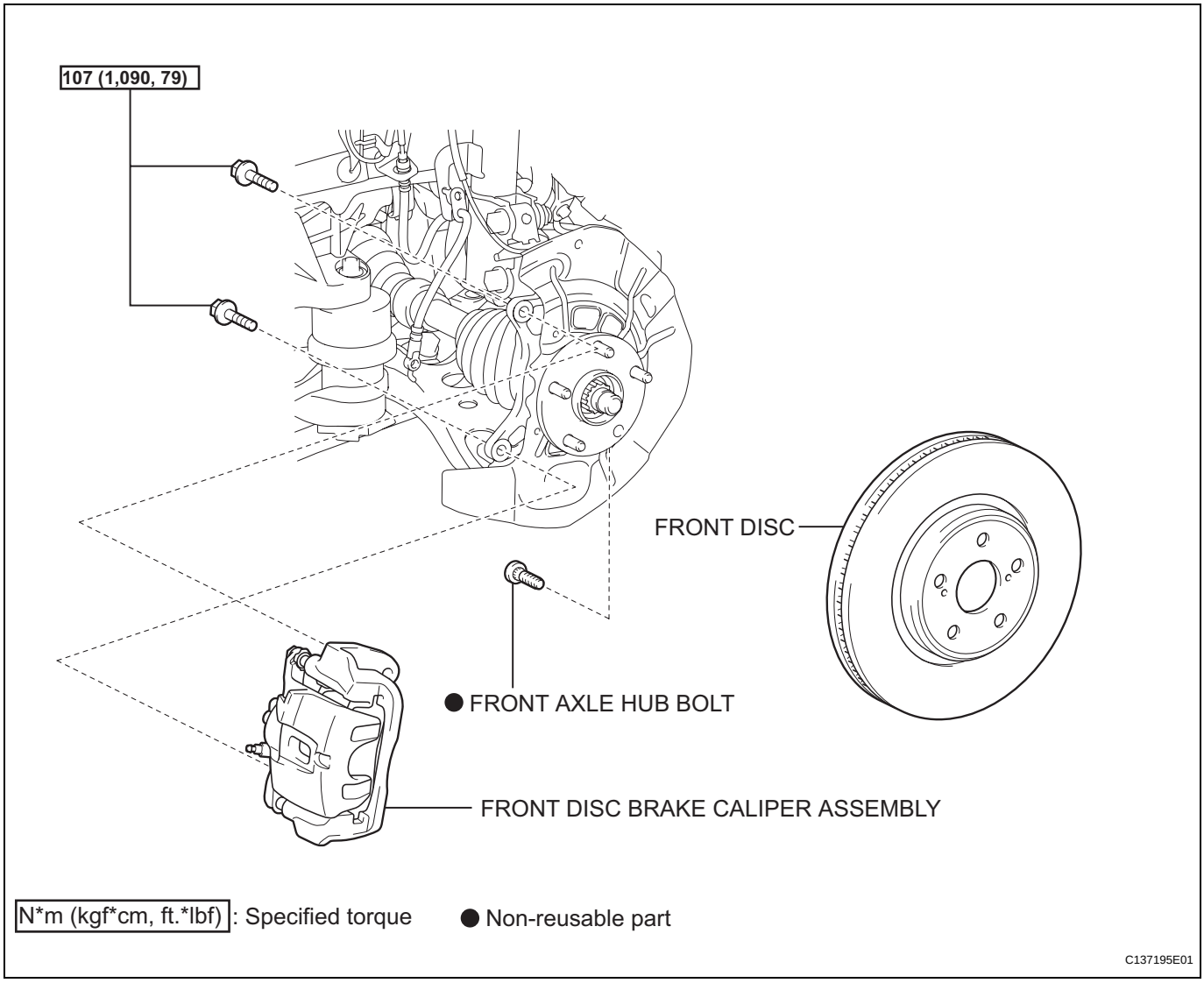

REPLACEMENT

1. **REMOVE FRONT WHEEL**
2. **SEPARATE FRONT DISC BRAKE CALIPER ASSEMBLY (See page AH-6)**
3. **REMOVE FRONT DISC (See page BR-37)**
4. **REMOVE FRONT AXLE HUB BOLT**
   (a) Temporarily install the 2 nuts and washers to the front axle hub bolt as shown in the illustration.
   (b) Using SST and a brass bar or a similar tool to hold the front axle, remove the front axle hub bolt.
   SST 09628-10011

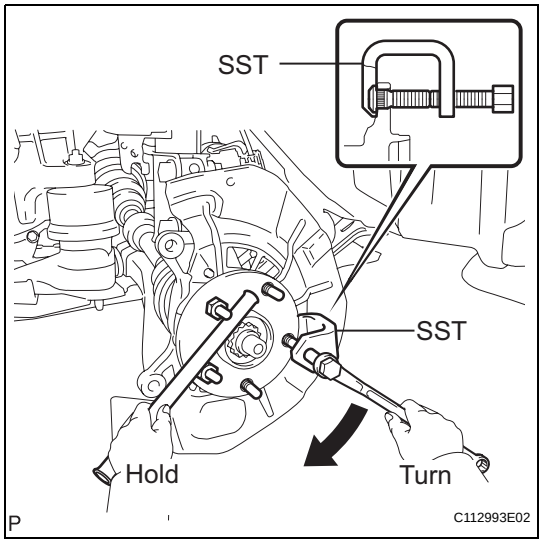

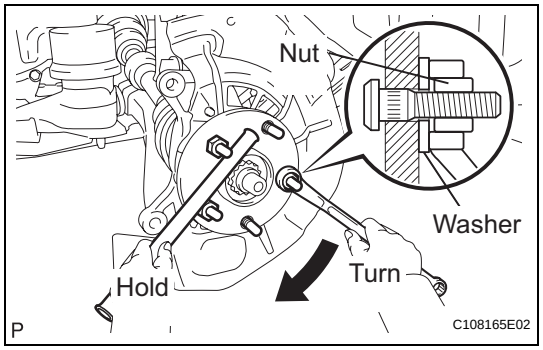

5. **INSTALL FRONT AXLE HUB BOLT**
   (a) Install a washer and nut to a new front axle hub bolt as shown in the illustration.
   (b) Using a brass bar or a similar tool to hold the front axle, install the hub bolt by torquing the nut.
6. **INSTALL FRONT DISC (See page BR-39)**
7. **INSTALL FRONT DISC BRAKE CALIPER ASSEMBLY (See page AH-10)**
8. **INSTALL FRONT WHEEL**
   Torque: 103 N*m (1,050 kgf*cm, 76 ft.*lbf)