# Seat Belt Tension Reducer

## – Front Passenger's

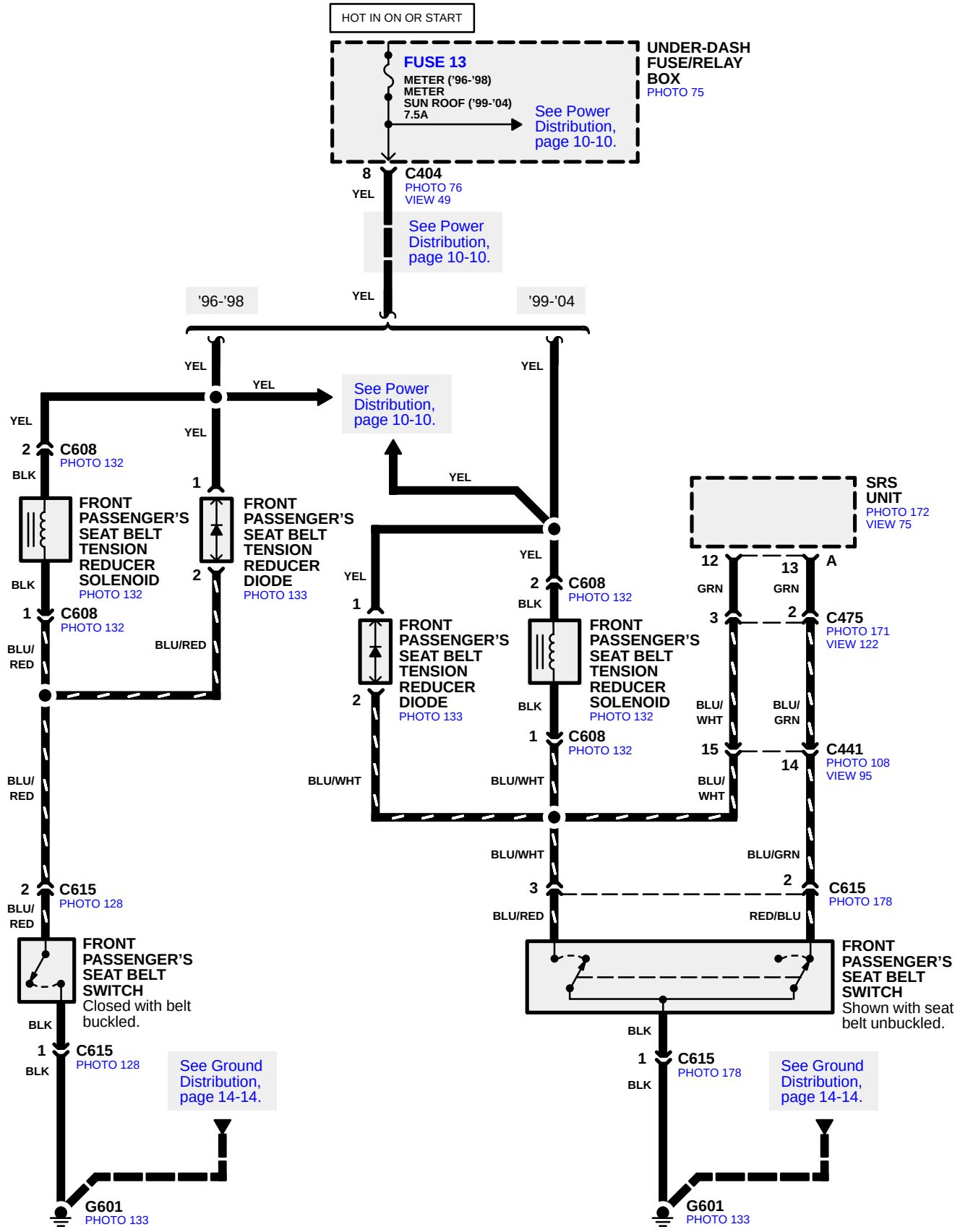


©2004 American Honda Motor Co., Inc.