Trailer Lighting Connector

– '04 Navigation

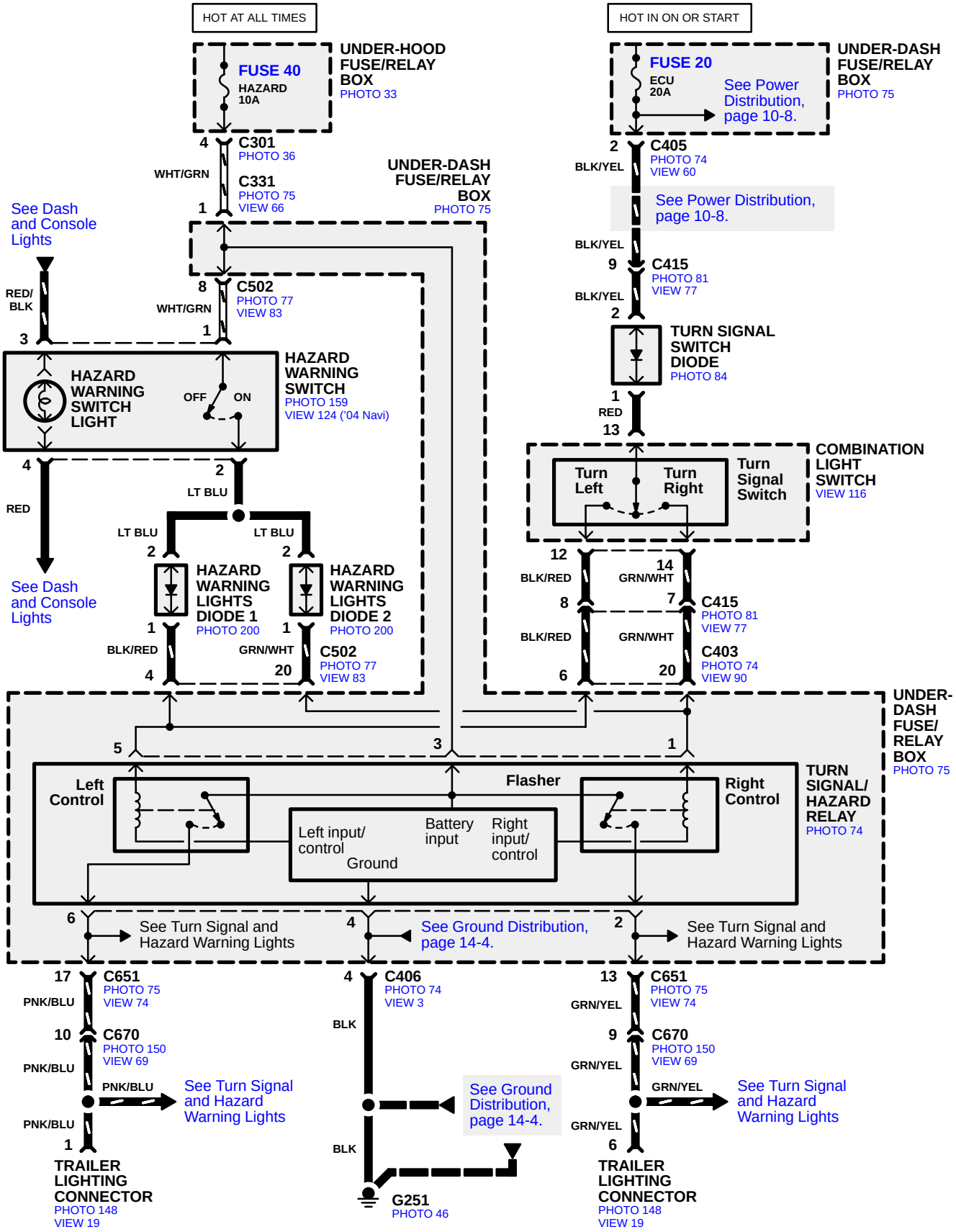

©2004 American Honda Motor Co., Inc.