Entry Light Control System

All Models

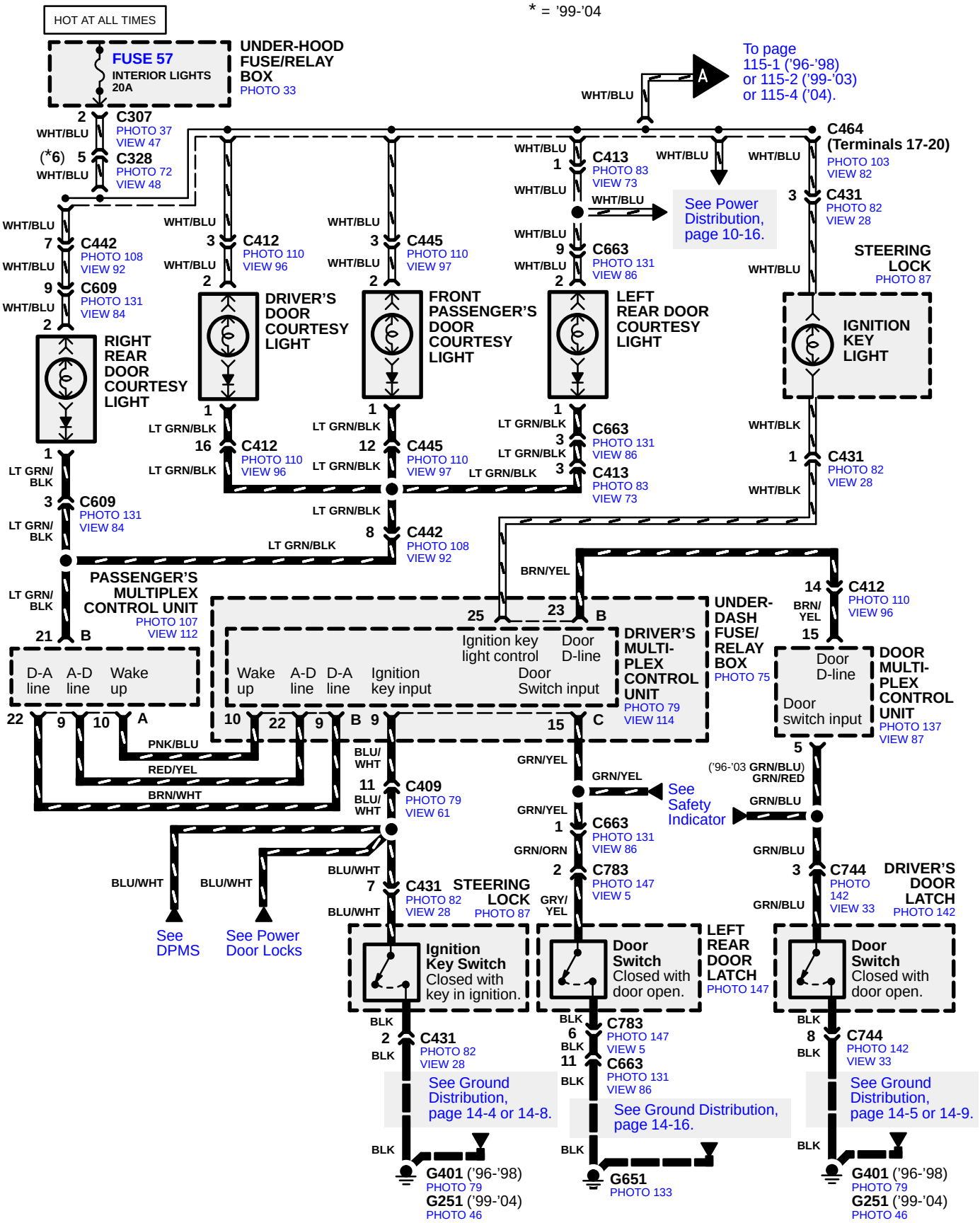

©2004 American Honda Motor Co., Inc.