Seat Belt, Lights-on, and Ignition Key Reminders

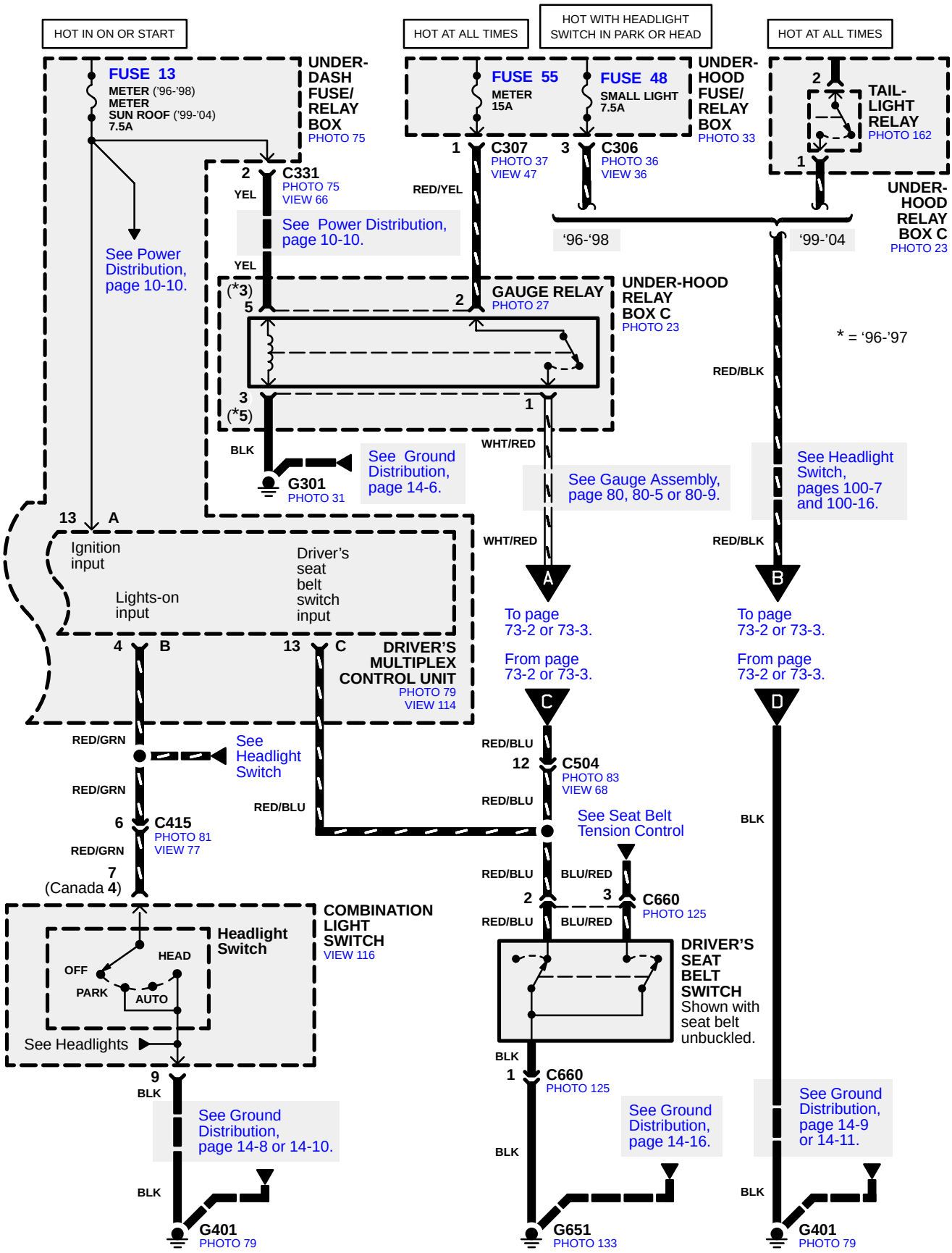

©2004 American Honda Motor Co., Inc.