Engine Oil Pressure Indicator Light

– ’04

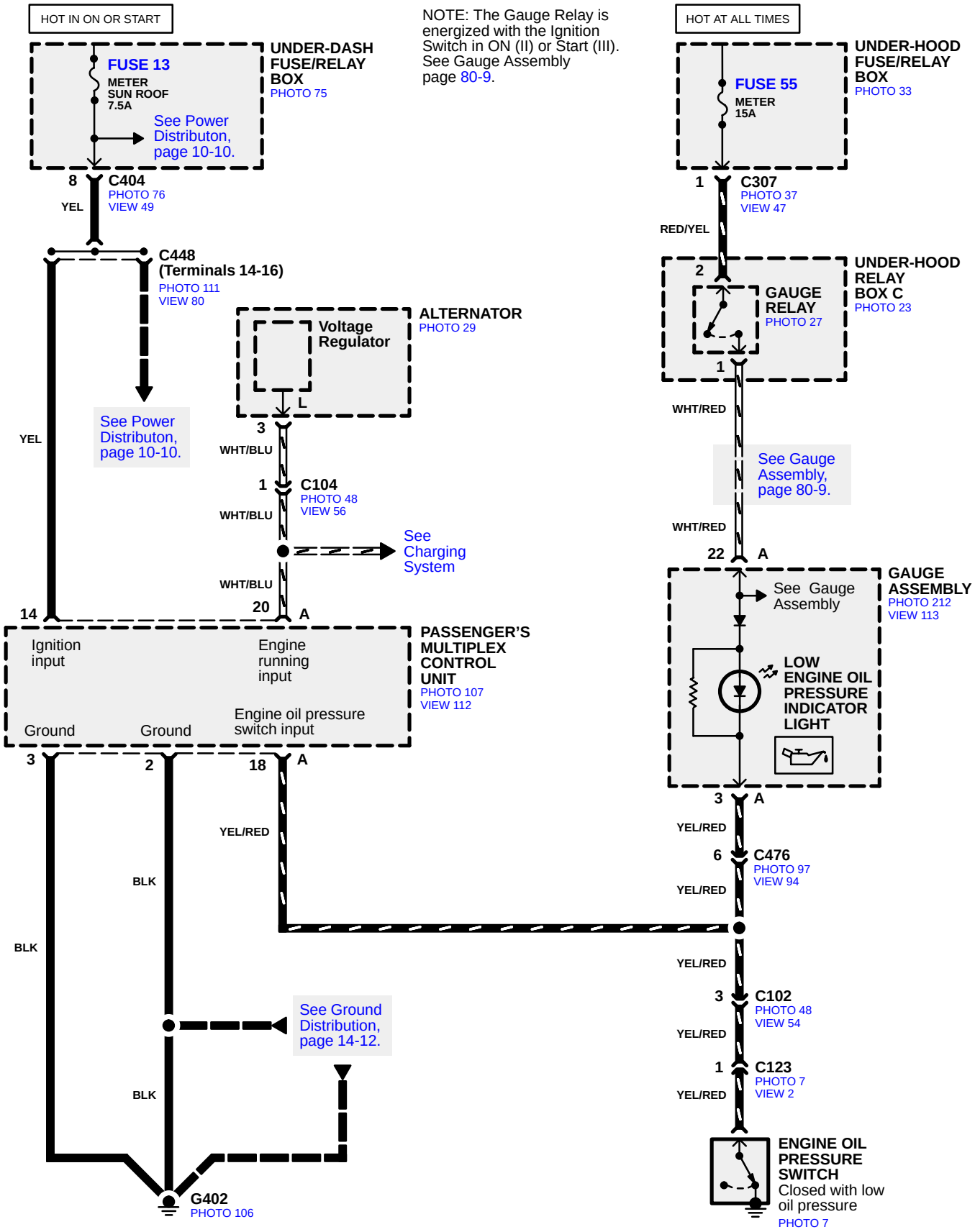

©2004 American Honda Motor Co., Inc.