HVAC

Climate Control

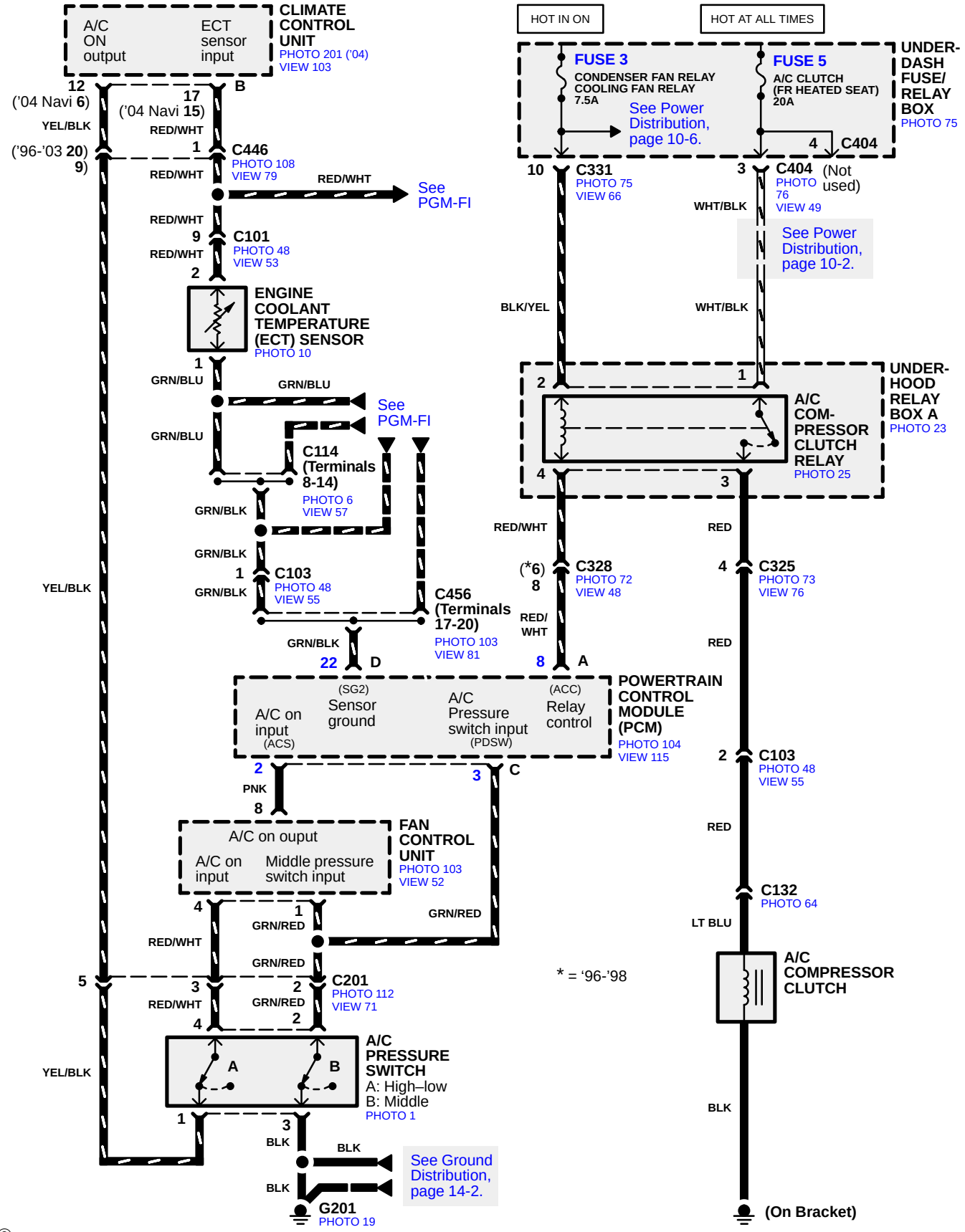

©2004 American Honda Motor Co., Inc.