Vehicle Stability Assist (VSA) System

– '00-'04

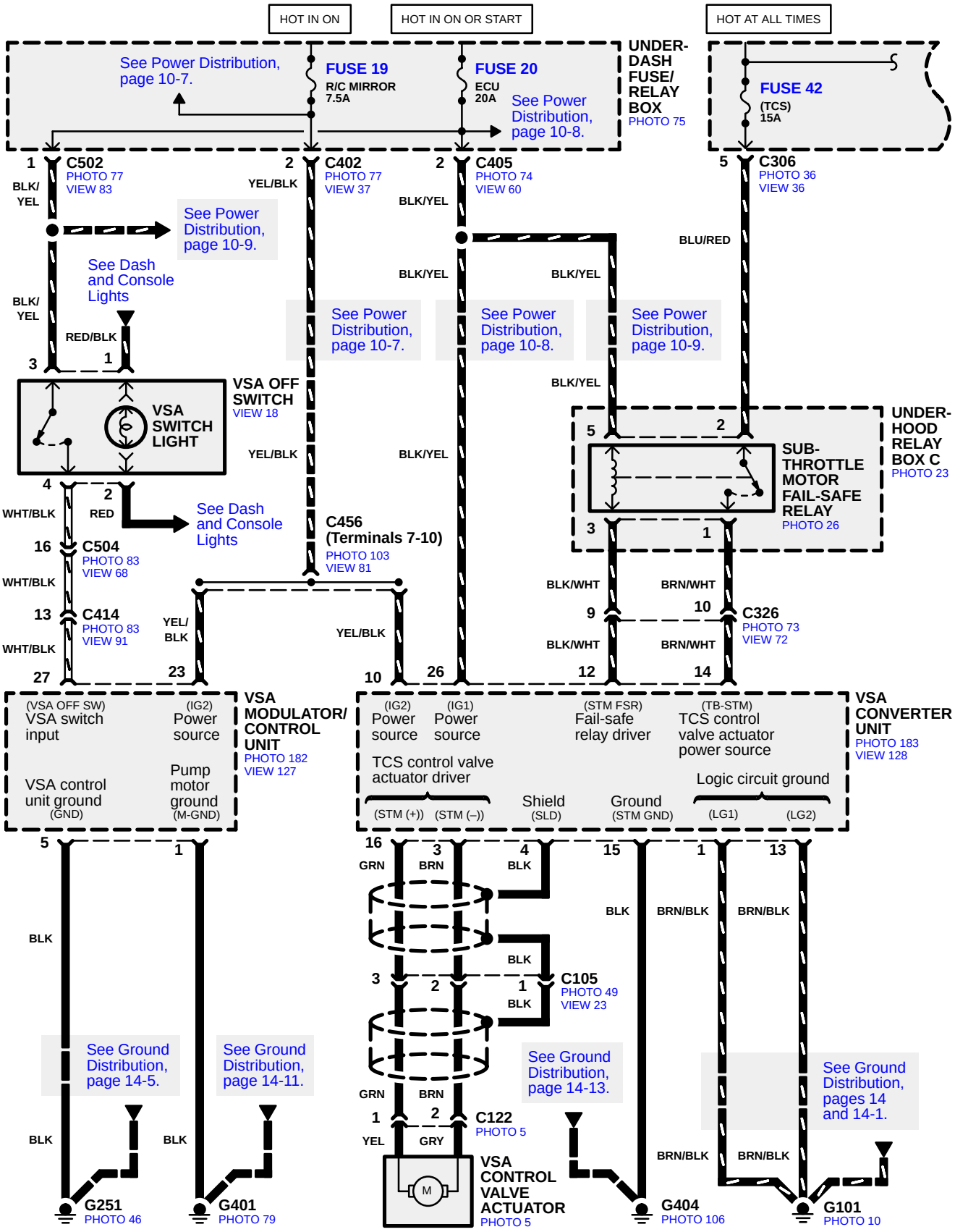

©2004 American Honda Motor Co., Inc.