# Cruise Control

## – ’96-’98

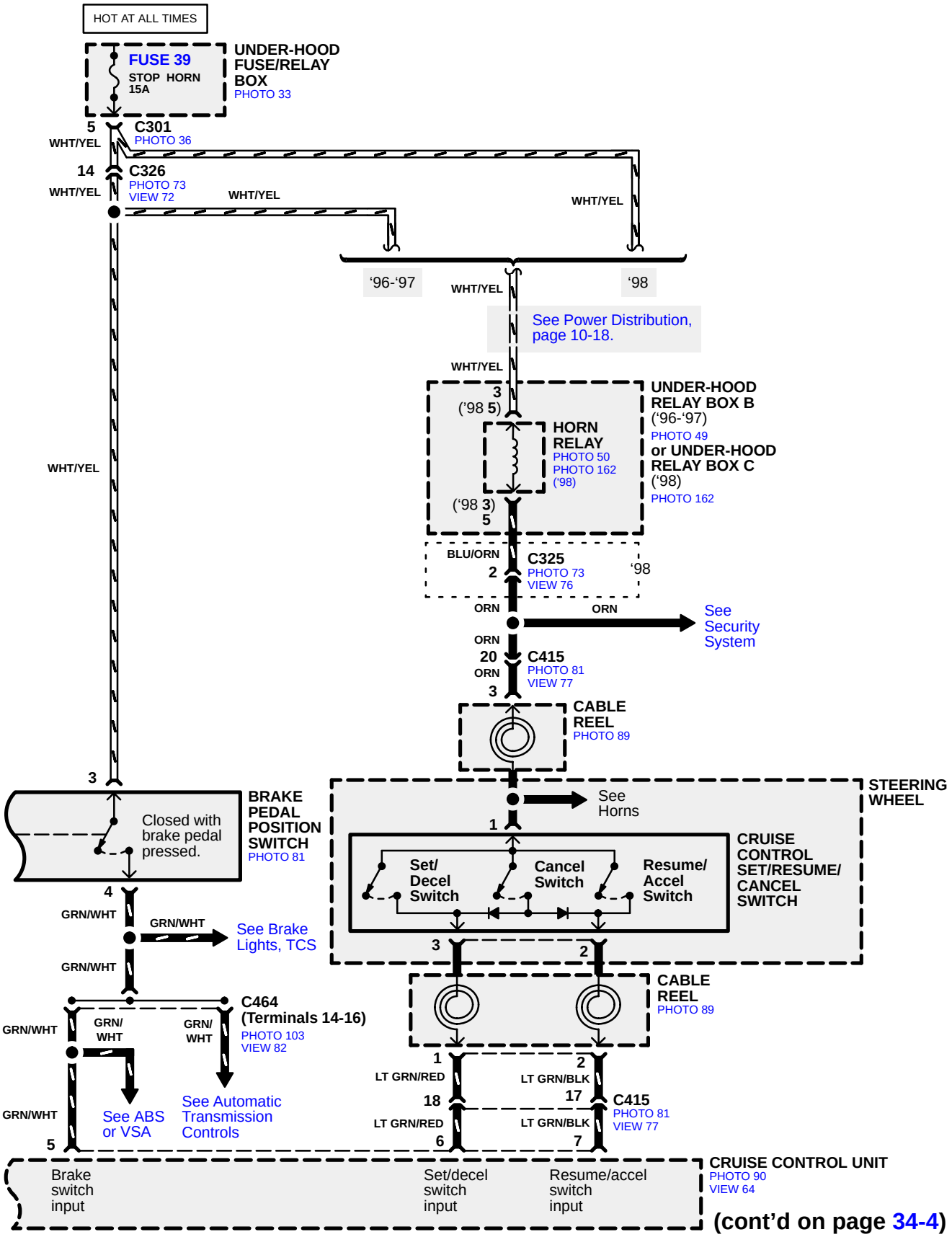


(cont’d on page 34-4)

©2004 American Honda Motor Co., Inc.