Vehicle Speed Sensor (VSS)

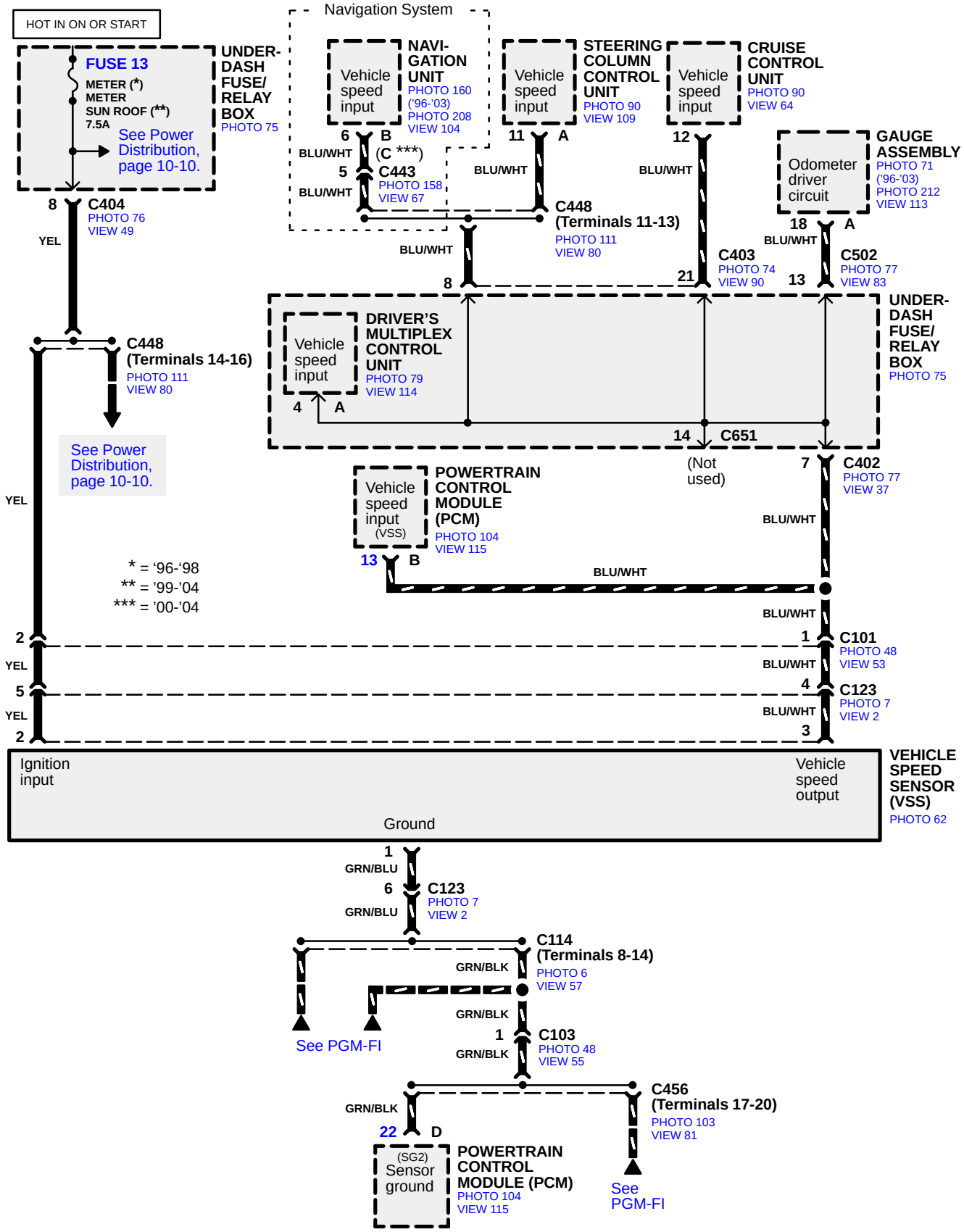

©2004 American Honda Motor Co., Inc.