Ground Distribution

G402 and G404

NOTE: Wires shown without color codes are black.

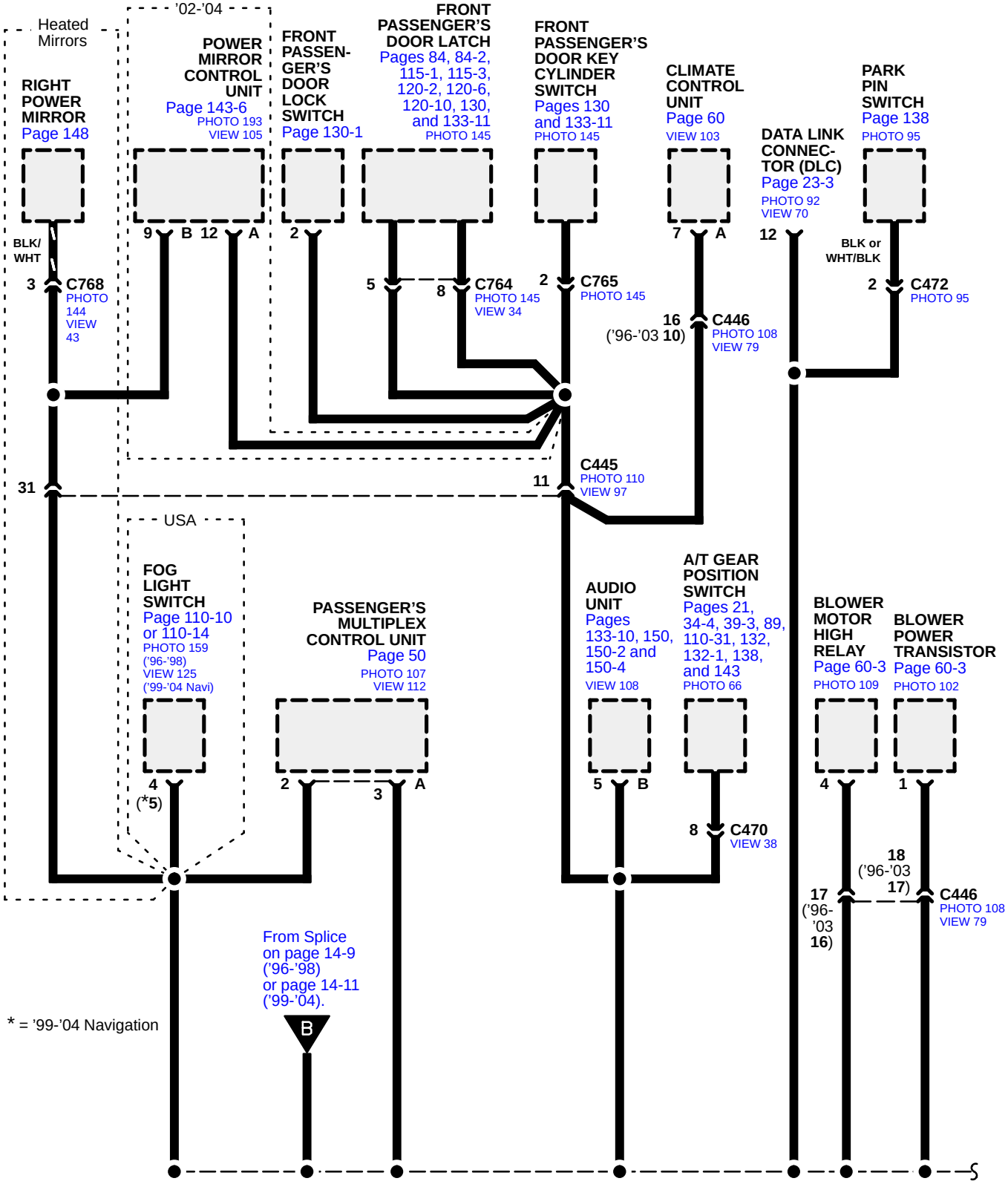

©2004 American Honda Motor Co., Inc.