Ground Distribution

G251 ('99-'04)

NOTE: Wires shown without color codes are black.

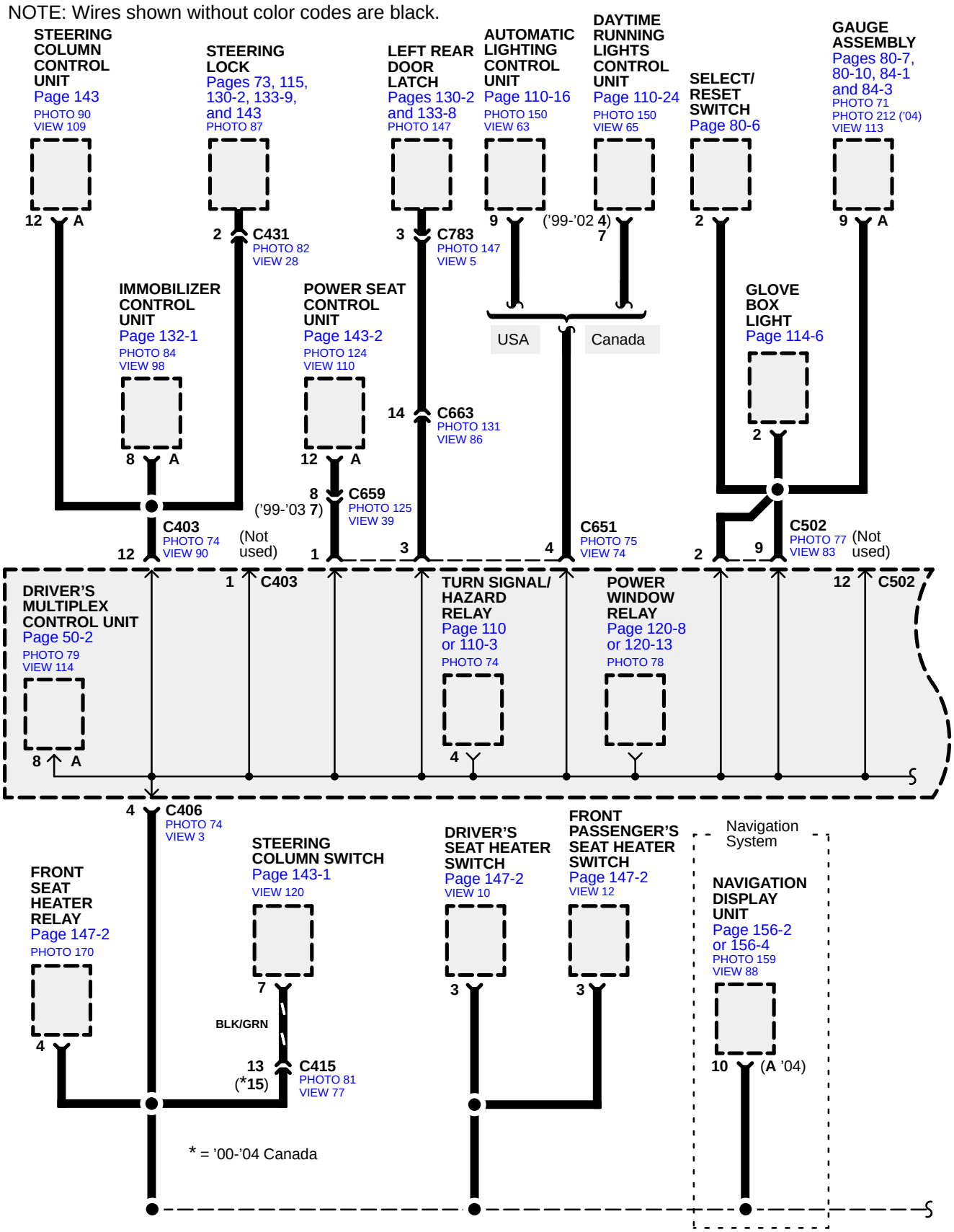

©2004 American Honda Motor Co., Inc.