Power Distribution

From Battery to Ignition Switch, Fuses, and Relays

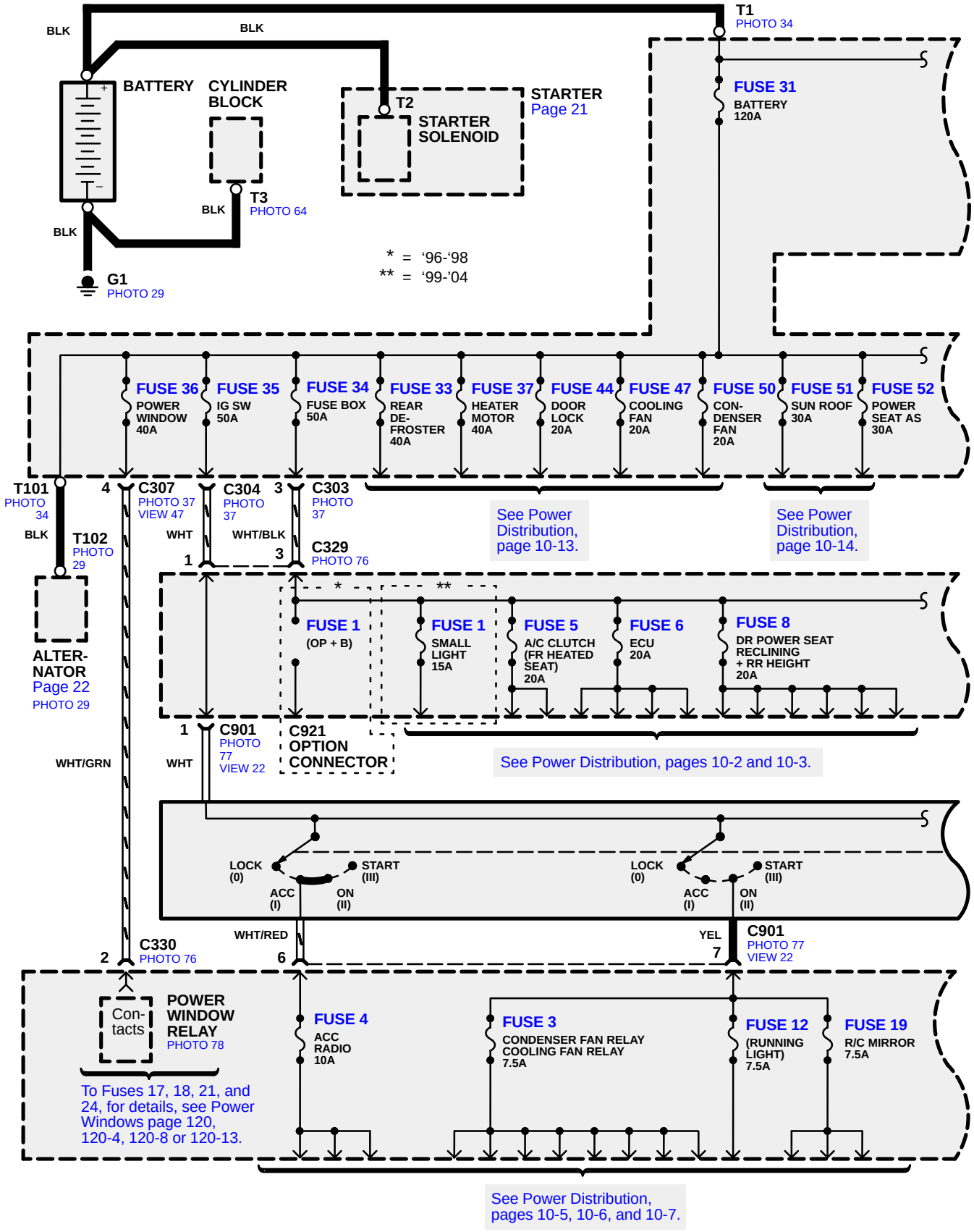

©2004 American Honda Motor Co., Inc.