WWW.MANUALS.WS

FREELANDER

Owner's Handbook

Publication Part No. LRL 0559NAS - 2nd Edition

© Land Rover 2002

All rights reserved. No part of this publication may be reproduced, stored in a retrieval system or transmitted in any form, electronic, mechanical, recording or other means without prior written permission from Land Rover.

WWW.MANUALS.WS

As part of Land Rover environmental policy, this publication is printed on paper made from chlorine free pulp.

WWW.MANUALS.WS

Owner's Handbook

This handbook covers all derivatives in the Freelander range available at the date of publication and, together with the other publications in the literature pack, provides information you will need to derive maximum pleasure from owning and driving your new vehicle.

For your convenience, the handbook is divided into sections, each dealing with a different aspect of the vehicle. These are listed on the following page and you will find it worthwhile to take a little time to read each one, and get to know your Freelander as soon as you possibly can. The more you understand before you drive, the greater the satisfaction once you are seated behind the steering wheel.

IMPORTANT

The specification of each vehicle will vary according to territorial requirements and also from model to model within the vehicle range. Some of the information published in this handbook, therefore, may not apply to your particular vehicle.

Land Rover operates a policy of constant product improvement and therefore reserves the right to change specifications without notice at any time. Whilst every effort is made to ensure complete accuracy of the information in this handbook, no liabilities for inaccuracies or the consequences thereof can be accepted by the manufacturer or the retailer, except in respect of personal injury caused by the negligence of the manufacturer or the retailer.

Contents

WWW.MANUALS.WS

Quick Guide
Quick Guide 7

Introduction
Introduction 19
Reporting Safety Defects 19
Auto Safety Hotline 19
California Proposition 65 Warning 19

Controls & Instruments
Locks & Alarm 27
Taildoor 35
Seats 36
Seat Belts 40
Child Restraints 45
Airbag SRS 49
Steering Column 55
Instruments 56
Warning Lights 59
Audible Warnings 62
Lights & Indicators 63
Wipers & Washers 65
Horn 68
Mirrors 69
Windows 71
Sunroof 73
Targa Roof 74
Heating & Ventilation 76
Interior Equipment 82
Loadspace Cover 88
In-Car Telephones 89
In-Car Entertainment 90

Driving & Operating
Starting & Driving 93
Fuel System 98
Catalytic Converter 101
Automatic Transmission 103
Hill Descent Control 108
Cruise Control 110
Brakes 112
Traction Control 117
Hardback 118
Roof Bars 121
Load Carrying 124
Towing 126

Off-Road Driving
Off-Road Driving 131
Driving Techniques 134

On-Road Driving
On-Road Driving 141

Owner Maintenance
Maintenance 147
Hood Opening 151
Engine Compartment 152
Engine Oil 153
Air Cleaner 156
Spark Plugs 157
Cooling System 158
Brakes 160
Power Steering 161
Washers 162
Wiper Blades 164
Battery 165
Tires 169
Cleaning & Vehicle Care 173
Identification Numbers 176
Parts & Accessories 177

Emergency Information
Wheel Changing 181
Emergency Starting 185
Towing the Vehicle 187
Fuses 189
Bulb Replacement 194

Technical Data
Technical Data 205
Index 213

WWW.MANUALS.WS

WWW.MANUALS.WS

WWW.MANUALS.WS

WWW.MANUALS.WS

Quick Guide

GENERAL DATA 7
FACIA CONTROLS 8
INSTRUMENT PANEL AND BINNACLE SWITCHES 9
WARNING LIGHTS 10
LIGHTS & INDICATORS 11
WIPERS & WASHERS 12
CENTER CONSOLE SWITCHES 13
HEATER CONTROLS 14
AUDIO/NAVIGATION SYSTEM CONTROLS 15
SOUND CONTROLS 16

WWW.MANUALS.WS

WWW.MANUALS.WS

WWW.MANUALS.WS

WWW.MANUALS.WS

GENERAL DATA

Recommended fuel
Unleaded gasoline with a CLC or AKI rating of 87 octane minimum.

Fuel tank capacity
16.9 US gallons (64 liters)

Tire pressures - all conditions
Front: 30 lbf/in^2 (205 kPa)
Rear: 30 lbf/in^2 (205 kPa)

Recommended engine oil
Use ONLY an approved full synthetic engine oil. For approved brands see 'Engine oil' in the *'Technical Data'* section of this handbook.

NOTE: *One quart is required to raise the level on the dipstick from 'min' to 'max'.*

For full technical data listings, please refer to the *'Technical Data'* section of this handbook.

*****An asterisk appearing within the text, identifies features or items of equipment that are either optional, or are only fitted to some vehicles in the model range.

WWW.MANUALS.WS

WWW.MANUALS.WS

FACIA CONTROLS

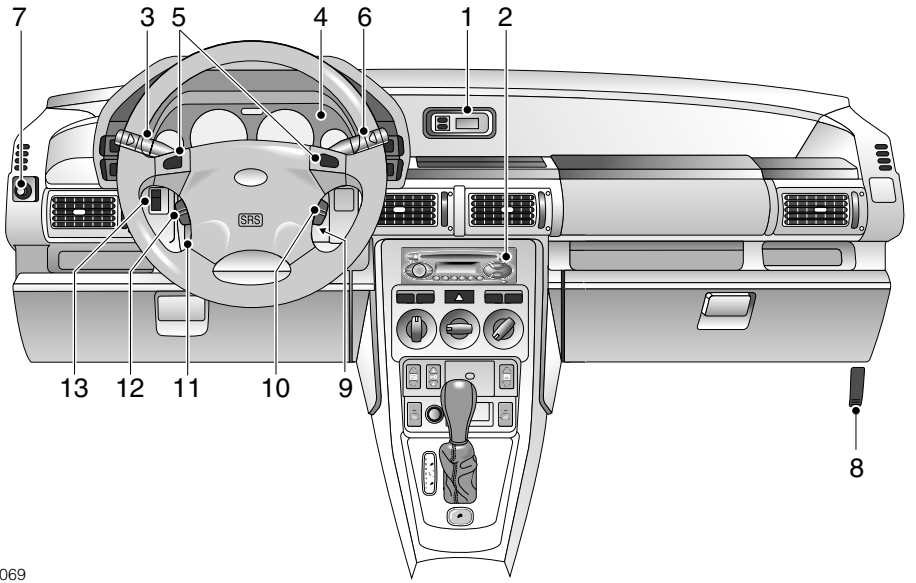

H4069

1. Clock display
2. Audio system
3. Lighting and direction indicator controls
4. Instrument panel
5. Horn switches
6. Windshield wiper/washer controls
7. Exterior mirror control
8. Hood release lever
9. Starter switch
10. Cruise control set and remote switches
11. Steering column adjustment lever
12. Remote audio controls
13. Instrument illumination control

NOTE: *The precise specification and location of the controls may vary according to territorial requirements and from model to model within the vehicle range.*

WWW.MANUALS.WS

WWW.MANUALS.WS

INSTRUMENT PANEL AND BINNACLE SWITCHES

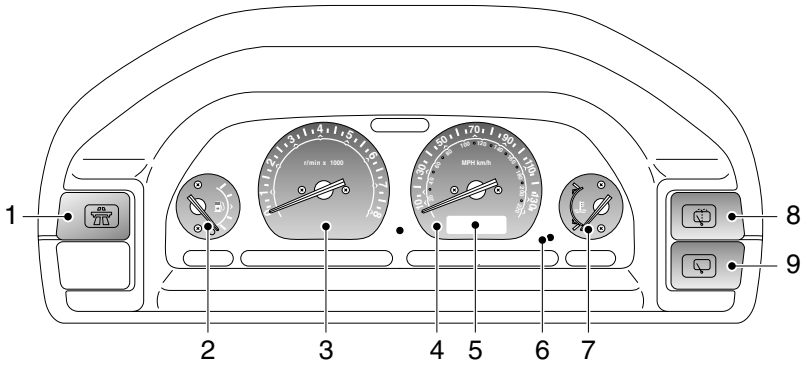

H4773

1. Cruise control master switch
2. Fuel gauge
3. Tachometer
4. Speedometer
5. Digital display
6. Trip recorder reset/mode button
7. Coolant temperature gauge
8. Rear windshield wash/wipe switch
9. Rear windshield wiper switch

NOTE: *This is a brief overview of the instrument panel and binnacle switches. For a more detailed description of each instrument, please refer to 'INSTRUMENT PANEL', page 59, and to find out more about the rear windshield wiper and washer, refer to 'REAR WINDSHIELD WIPER AND WASHER', page 67.*

WWW.MANUALS.WS

WWW.MANUALS.WS

WARNING LIGHTS

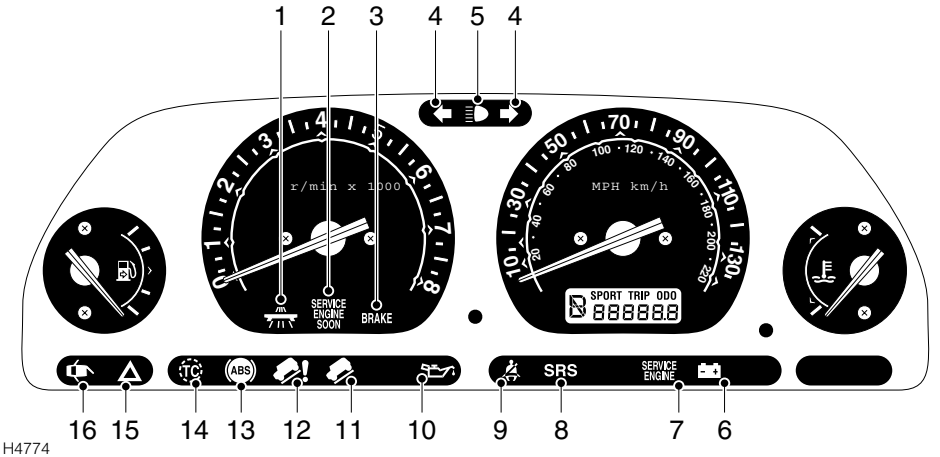

1. Cruise control (AMBER)
2. Service engine soon (AMBER).
3. Parking brake & brake system (RED)).
4. Direction indicators (GREEN).
5. Headlight high beam (BLUE).
6. Battery charging (RED).
7. Service engine
8. Supplemental restraint system - airbags (RED).
9. Seat belt reminder (RED).
10. Low oil pressure (RED).
11. Hill descent control (GREEN).
12. Hill descent control ‘failure’ (AMBER).
13. Anti-lock braking system (AMBER).
14. Traction control (AMBER).
15. Hazard warning lights (RED)
16. Door open (RED)

NOTE: *This is a brief overview of the warning lights, for more information concerning warning light functionality, please refer to ‘INSTRUMENT PANEL’, page 59.*

WWW.MANUALS.WS

WWW.MANUALS.WS

LIGHTS & INDICATORS

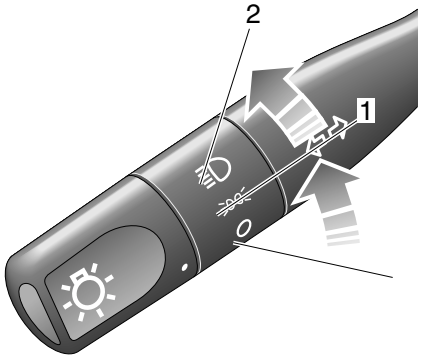

H3341

Side, tail and instrument panel lights
Turn lighting switch to position 1.

Headlights
Turn lighting switch to position 2.

Daytime running lights*
The headlights illuminate automatically, when the starter switch is turned to position ‘II’.

Headlight high and dipped beams

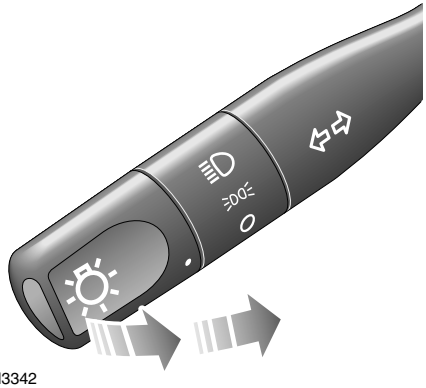

H3342

Pull the lever fully towards the steering wheel to change headlight beams.

Direction indicators

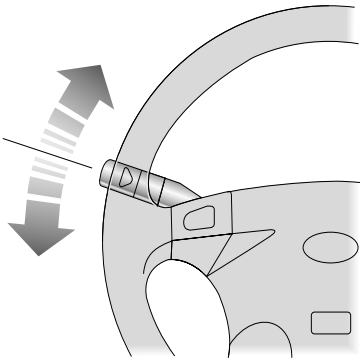

H3340

Move the lever DOWN to indicate a LEFT turn, and UP to indicate a RIGHT turn.

NOTE: *For further information concerning operation of the lights, please refer to ‘DIRECTION INDICATORS’, page 63.*

WWW.MANUALS.WS

WWW.MANUALS.WS

WIPERS & WASHERS

The wipers and washers will only operate when the starter switch is turned to position ‘I’ or ‘II’.

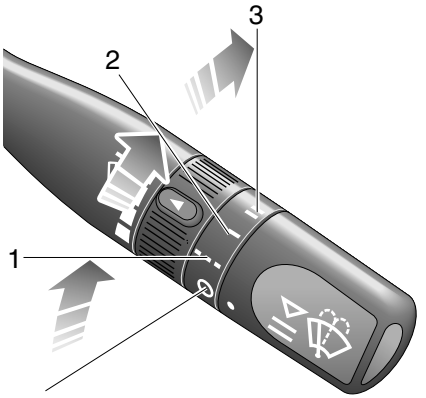

H3345

Intermittent wipe
Turn switch to position 1.

Normal speed wipe
Turn switch to position 2.

Fast speed wipe
Turn switch to position 3.

Single wipe
Pull the lever down and release immediately.

NOTE: *With the lever held down, the wipers will operate at fast speed until the lever is released.*

Variable delay (intermittent wipe)

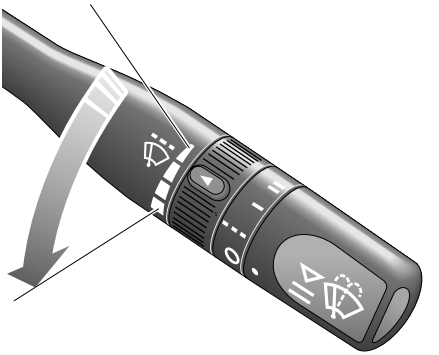

H3346

Rotate the inner switch to vary the delay between wipes.

Windshield washers

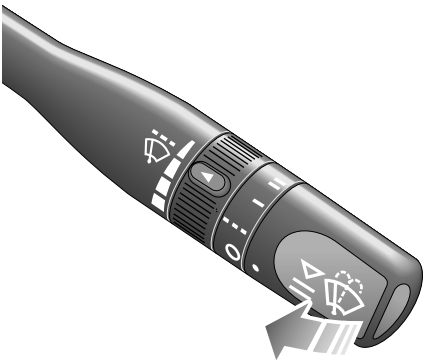

H3347

Pull the lever towards the steering wheel. The windshield wipers will operate in conjunction with the washers.

WWW.MANUALS.WS

WWW.MANUALS.WS

CENTER CONSOLE SWITCHES

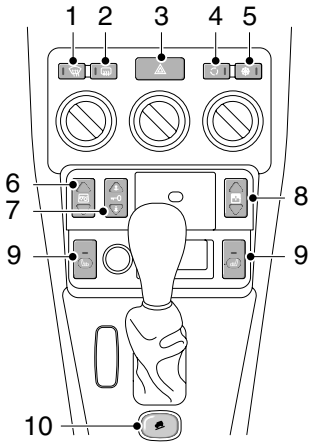

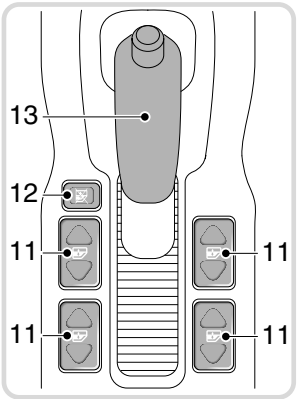

1. Heated front windshield*
2. Heated rear windshield
3. Hazard warning lights
4. Recirculated air supply*
5. Air conditioning
6. Electric taildoor glass
7. Central door locking
8. Sunroof*
9. Heated seats (2)*
10. Hill descent control
11. Electric windows (4)
12. Rear windows isolation switch
13. Parking brake

WWW.MANUALS.WS

WWW.MANUALS.WS

HEATER CONTROLS

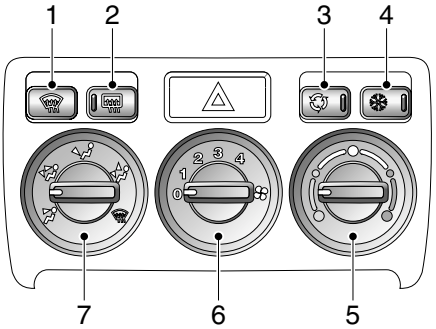

1. Heated front windshield*

2. Rear windshield demister

3. Air recirculation button

4. Air conditioning

5. Air temperature control

6. Air blower control

7. Air distribution control

Air to face vents.

Air to face vents and foot outlets.

Air to foot outlets.

Air to foot outlets and windshield.

All air to windshield.

WWW.MANUALS.WS

WWW.MANUALS.WS

AUDIO/NAVIGATION SYSTEM CONTROLS

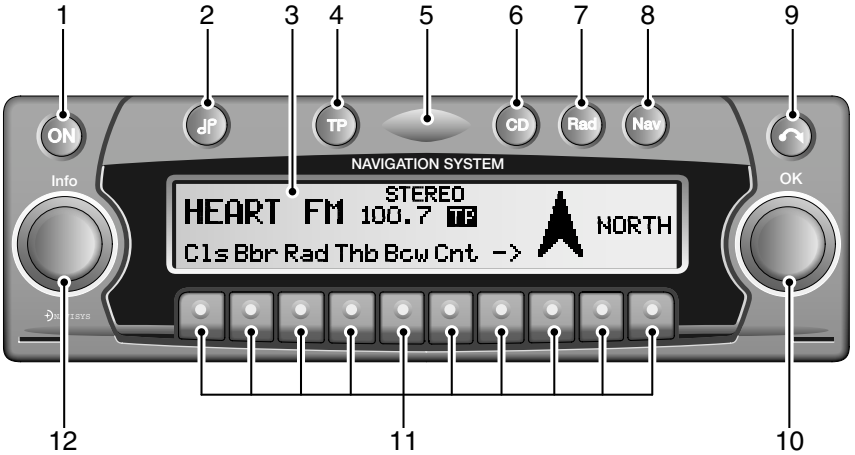

ICE 1242

1. On/Off
2. Tone button
3. Display
4. Traffic programme button
5. Security light
6. CD mode selection button
7. Radio mode selection button
8. Navigation mode selection button
9. Display/CD eject button
10. Right rotary control
11. Multifunction buttons
12. Left rotary control

NOTE: *For more information concerning the operation of your audio system, see your In-Car Entertainment handbook.*

WWW.MANUALS.WS

WWW.MANUALS.WS

SOUND CONTROLS

ICE 1184

1. On/off and volume control
2. Fader and balance control
3. Bass and treble control
4. Menu control (MENU)
5. Search controls (< >)

NOTE: *For more information concerning the operation of your audio system, see your In-Car Entertainment handbook.*

WWW.MANUALS.WS

WWW.MANUALS.WS

Introduction

REPORTING SAFETY DEFECTS 19
AUTO SAFETY HOTLINE 19
WARNING LABELS ATTACHED TO THE VEHICLE 19
CALIFORNIA PROPOSITION 65 WARNING 19
WARNINGS IN THIS HANDBOOK. 19
BEFORE YOU DRIVE 20
SYMBOLS USED 20
PASSPORT TO SERVICE 20
INFORMATION LABELS IN THE ENGINE COMPARTMENT 21
SUN VISOR LABELS 22
PASSENGER AIRBAG LABEL. 22
ANTI-THEFT PRECAUTIONS 23
IN AN EMERGENCY 23
BREAKING-IN 24

WWW.MANUALS.WS

WWW.MANUALS.WS

WWW.MANUALS.WS

WWW.MANUALS.WS

REPORTING SAFETY DEFECTS

If you believe that your vehicle has a defect which could cause a crash, or could cause injury or death, you should immediately inform the National Highway Traffic Safety Administration (NHTSA) in addition to notifying Land Rover North America Inc.

If NHTSA receives similar complaints, it may open an investigation and if it finds that a safety defect exists in a group of vehicles, it may order a recall and remedy campaign.

However, NHTSA cannot become involved in individual problems between you, your retailer or Land Rover North America.

AUTO SAFETY HOTLINE

To contact NHTSA, you may either call the Auto Safety HOTLINE toll free at 1-800-424-9393 (or 202-366-0123 in the Washington, D.C. area) or write to: NHTSA, U.S. Department of Transportation, Washington, DC 20590. You can also obtain other information about motor vehicle safety from the HOTLINE.

WARNING LABELS ATTACHED TO THE VEHICLE

Warning labels attached to your vehicle bearing this symbol mean: DO NOT touch or adjust components until you have read the relevant instructions in the handbook.

Warning labels showing this symbol indicate that the ignition system utilizes very high voltages. DO NOT touch any ignition components while the starter switch is turned on!

CALIFORNIA PROPOSITION 65 WARNING

WARNING

Engine exhaust, some of its constituents and certain vehicle components contain or emit chemicals known to the State of California to cause cancer and birth defects or other reproductive harm. In addition, certain fluids contained in vehicles and certain products of component wear contain or emit chemicals known to the State of California to cause cancer, and birth defects or other reproductive harm.

WARNING

Battery posts, terminals and related accessories contain lead and lead compounds. Wash hands after handling.

WARNINGS IN THIS HANDBOOK

WARNING

Safety warnings are included in this handbook. These indicate a procedure which must be followed precisely in order to avoid the possibility of personal injury.

WWW.MANUALS.WS

WWW.MANUALS.WS

BEFORE YOU DRIVE

Your Freelander has a higher ground clearance and, hence, a higher center of gravity than ordinary passenger cars, to enable the vehicle to perform in a wide variety of off-road applications. An advantage of the higher ground clearance is a better view of the road, allowing you to anticipate problems.

The vehicle is not designed for cornering at the same speed as conventional passenger cars any more than a low-slung sports car is designed to perform satisfactorily under off-road conditions. If at all possible, avoid sharp turns or abrupt maneuvers. As with other vehicles of this type, failure to operate the Freelander correctly may result in loss of control or vehicle rollover. For important safety information, be sure to read the 'On-Road' and 'Off-Road' driving guidelines given later in this handbook.

SYMBOLS USED

The following symbols used within the handbook call your attention to specific types of information.

This recycling symbol identifies items that must be disposed of safely in order to prevent unnecessary damage to the environment.

This symbol identifies features that can be adjusted or disabled/enabled by a Land Rover retailer

*****An asterisk appearing within the text, identifies features or items of equipment that are either optional, or are only fitted to some vehicles in the model range.

PASSPORT TO SERVICE

The Passport to Service book included in your literature pack contains important vehicle identification information, details of your entitlement under the terms of the Land Rover warranty, as well as useful consumer advice.

Most important of all, however, is the section on maintenance. This outlines the servicing requirements for your vehicle and also includes the service record slips, which the retailer should sign and stamp to certify that routine services have been carried out.

WWW.MANUALS.WS

WWW.MANUALS.WS

INFORMATION LABELS IN THE ENGINE COMPARTMENT

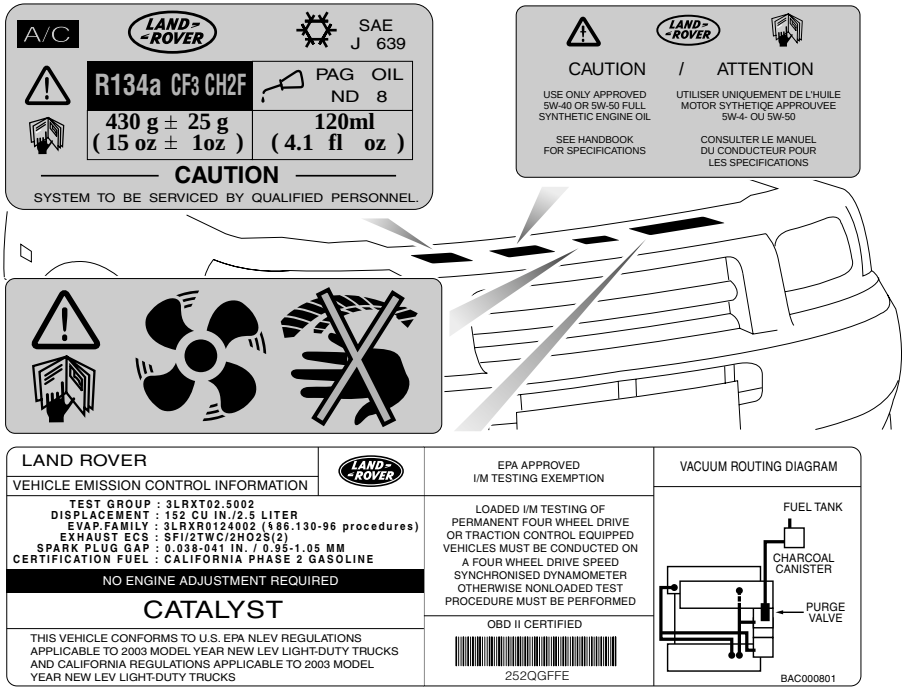

H4560

Various labels are attached to the hood locking platform, the number, position and content of which may vary from model to model. The following list is provided as a guide:

- Keep clear of rotating engine parts
- Air conditioning label
- Emission control label
- Engine oil label

WWW.MANUALS.WS

WWW.MANUALS.WS

SUN VISOR LABELS

H4032

Take note of the warnings concerning the airbag SRS and risk of vehicle rollover.

PASSENGER AIRBAG LABEL

H4761

Take note of the warning concerning the airbag SRS and the safe seating of small children.

WWW.MANUALS.WS

WWW.MANUALS.WS

ANTI-THEFT PRECAUTIONS

While it may be difficult to deter the 'professional' car thief, the majority of thefts are carried out by unskilled opportunists. Therefore, take vehicle security very seriously and ALWAYS adopt this simple 'four point' drill whenever you leave your vehicle - even for just a few minutes:

1. Fully close all the windows (and the sunroof).
2. Remove your valuable belongings (or hide them out of sight).
3. Remove the starter key.
4. Superlock the vehicle using the remote handset.

Thieves are attracted by 'vulnerable' vehicles. Even if you have followed the 'four point' drill, there is still much you can do to make your vehicle a less inviting target.

BE SAFE - NOT SORRY!

- Park where your vehicle can be easily seen by householders and passers-by.
- At night, park in well lit areas and avoid deserted or dimly-lit side streets.
- NEVER leave the keys in the vehicle.
- Do not keep important documents (or spare keys) in the vehicle - these are a real bonus for the thief.

IN AN EMERGENCY

IMPORTANT INFORMATION

Remember the breakdown safety code

If a breakdown occurs while travelling:

- Wherever possible, consistent with road safety and traffic conditions, the vehicle should be moved off the main thoroughfare, preferably onto the shoulder. If a breakdown occurs on a freeway, pull well over to the inside of the shoulder.
- Switch on hazard lights.
- If possible, position a warning triangle or a flashing amber light at an appropriate distance from the vehicle to warn other traffic of the breakdown, (note the legal requirements of some areas).
- Consider evacuating passengers through the doors facing away from the traffic, to a safe area away from the vehicle as a precaution in case your Freelander is accidentally struck by another vehicle.

WWW.MANUALS.WS

WWW.MANUALS.WS

BREAKING-IN

Proper breaking-in will have a direct bearing on the reliability and smooth running of your vehicle throughout its life.

In particular, the engine, gearbox, brakes and tires need time to 'bed-in' and adjust to the demands of everyday motoring. During the first 600 miles (1000 km), it is essential to drive with consideration for the breaking-in process and heed the following advice:

- LIMIT maximum road speed to 70 mph (110 km/h) or 3,000 rev/min. Initially, drive the vehicle on a light throttle and only increase engine speeds gradually once the breaking-in distance has been completed.
- DO NOT operate at full throttle or allow the engine to labour in any gear.
- AVOID fast acceleration and heavy braking except in emergencies.

After the breaking-in distance has been completed, engine speeds may be gradually increased.

WWW.MANUALS.WS

Controls & Instruments

WWW.MANUALS.WS

Locks & Alarm

KEYS AND HANDSETS. 27
ALARM SYSTEM 27
LOCKING THE VEHICLE AND ARMING THE ALARM. 28
CHILD-PROOF LOCKS 31
ENGINE IMMOBILISATION 31
DOOR LOCKING CUT-OFF SWITCH 32
REMOTE HANDSET BATTERY 33
ALARM OR HANDSET DIFFICULTIES. 34

Taildoor

OPENING AND CLOSING 35

Seats

SEATING 36
FOLDING THE REAR SEATS. 38

Seat Belts

SEAT BELT SAFETY 40
WEARING SEAT BELTS CORRECTLY. 41
FRONT SEAT BELT PRE-TENSIONERS 43
CARE & MAINTENANCE OF SEAT BELTS. 44

Child Restraints

CHILD RESTRAINTS FOR SMALL CHILDREN AND BABIES 45
CHILD RESTRAINTS FOR LARGER CHILDREN . . 45
TETHER STRAP ANCHORAGES 47
‘LATCH’ TYPE CHILD RESTRAINTS. 48

Airbag SRS

AIRBAG SUPPLEMENTAL RESTRAINT SYSTEM (SRS). 49
HOW THE AIRBAG SRS WORKS 51
CHILD SEATS. 53
SERVICE INFORMATION 53

Steering Column

STEERING COLUMN ADJUSTMENT 55

Instruments

INSTRUMENT PANEL 56

Warning Lights

INSTRUMENT PANEL 59

WWW.MANUALS.WS

WWW.MANUALS.WS

Audible Warnings
AUDIBLE WARNINGS 62

Lights & Indicators
DIRECTION INDICATORS 63
LIGHTS 63
HAZARD WARNING LIGHTS 64

Wipers & Washers
OPERATING 65
WINDSHIELD WIPERS 65
WINDSHIELD WASHERS 66
REAR WINDSHIELD WIPER AND WASHER 67

Horn
HORN 68

Mirrors
EXTERIOR MIRRORS 69
INTERIOR MIRROR 70
VANITY MIRROR 70

Windows
ELECTRIC WINDOW CONTROLS 71
ELECTRIC TAILDOOR GLASS 72

Sunroof
ELECTRIC SUNROOF 73

Targa Roof
TARGA ROOF 74

Heating & Ventilation
VENTILATION 76
HEATER CONTROLS 77
USING YOUR HEATER 78
FACE LEVEL VENTS 79
AIR CONDITIONING 80
HEATED FRONT SEATS 81

Interior Equipment
COURTESY & MAP READING LIGHTS 82
LUGGAGE COMPARTMENT LIGHT 82
CLOCK 82
GLOVEBOX 83
DRIVER'S STORAGE AREA 83
PASSENGERS' STORAGE 84
DRINKS STOWAGE 84
CUP HOLDERS 85
SUN VISOR 86
ASHTRAY 86
CIGAR LIGHTER 87
AUXILIARY POWER SOCKET 87

Loadspace Cover
LOADSPACE COVER 88

In-Car Telephones
IN-CAR TELEPHONES 89

In-Car Entertainment
RADIO/CASSETTE PLAYER 90
RADIO AERIAL 90
REMOTE AUDIO CONTROLS 90
NAVIGATION SYSTEM 90

WWW.MANUALS.WS

WWW.MANUALS.WS

KEYS AND HANDSETS

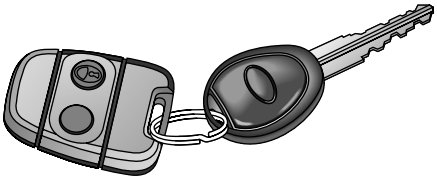

H3519A

You have been supplied with a pair of identical keys and two remote control handsets.

Keep the spare key in a safe place - NOT IN THE VEHICLE!

The keys supplied with your vehicle are programmed to the vehicle's security system - they CANNOT be reprogrammed and the engine cannot be started without a valid programmed key. If a key is lost or broken, a replacement can be ordered only from a Land Rover retailer.

NOTE: *Land Rover retailers do not stock spare keys, time has to be allowed for replacements to be programmed to your security system and then delivered to the retailer.*

If you lose a key, contact your Land Rover retailer; a key reported lost will be deactivated. If the key is later recovered, your Land Rover retailer can have it reactivated.

IMPORTANT INFORMATION

The handset complies with part 15 of the FCC rules. Operation is subject to the following conditions:

- This device may not cause harmful interference.
- This device must accept any interference received, including interference that may cause undesired operation. This applies to both alarm receivers and transmitters.

Any changes or modifications to the handset not expressly approved by the manufacturer or Land Rover North America, could void the user’s authority to operate the equipment.

ALARM SYSTEM

Your vehicle is fitted with a sophisticated electronic anti-theft alarm and engine immobilisation system. In order to ensure maximum security and minimum inconvenience, you are strongly advised to gain a full understanding of the alarm system by thoroughly reading this section of the handbook.

WWW.MANUALS.WS

WWW.MANUALS.WS

LOCKING THE VEHICLE AND ARMING THE ALARM

Before locking the vehicle and arming the alarm, ensure that all doors (including taildoor), windows, sunroof and hood apertures are securely closed.

There are three methods for securing your vehicle:

- 'Superlocking' using the handset - (recommended high security method).
- 'Superlocking' using the key.
- Locking using the key.

IMPORTANT INFORMATION
• FOR MAXIMUM SECURITY ALWAYS SUPERLOCK THE VEHICLE USING THE REMOTE HANDSET

Using the remote handset

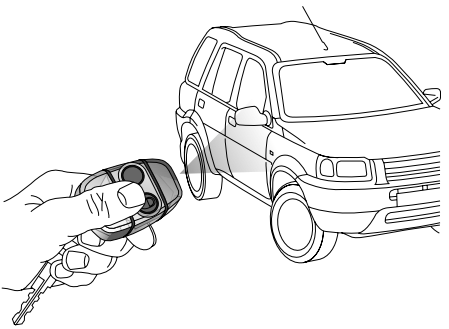

H3297

While it is not necessary to point the handset at the vehicle, the handset must be within range of the vehicle when a button is pressed. Note that the operating range may vary depending upon handset battery condition and may sometimes be limited by physical and geographical factors beyond your control. From a security point of view, it may not be wise to unlock unless you are within a few feet of the vehicle.

Locking

With the remote handset:

Press the lock (padlock symbol) button once. Each time the vehicle is locked using the handset, a coded signal is transmitted to a receiver inside the vehicle, which activates the following security features:

- the central door locking system (all the door locks are activated).
- the perimetric alarm (protects the door, taildoor, and hood apertures).

Pressing the lock (padlock symbol) a second time within one second of the first action activates:

- 'Superlocking' - the door locks cannot be operated from inside the vehicle.

With both levels of locking, if the doors lock correctly, the direction indicator lights flash three times to confirm that the vehicle is secure and the anti-theft alarm indicator light (in the instrument panel) will start to flash rapidly.

Once armed, the alarm will sound if any door is opened.

With the key:

Insert the key and turn the door lock clockwise. Turning the key ONCE activates the following:

- all doors locked (not superlocked)
- perimetric alarm activated (protects the doors, hood and taildoor)

Turning the key TWICE within 1 second activates, in addition to the above:

- Superlocking

If the doors lock correctly, the direction indicators flash three times to confirm that the vehicle is secure and the anti-theft alarm indicator light (in the instrument panel) will start to flash rapidly.

NOTE: *The engine will automatically be immobilised after the starter switch has been turned off.*

WWW.MANUALS.WS

WWW.MANUALS.WS

Superlocking
Provided all the doors are fully closed, the Superlocking feature is activated automatically whenever the vehicle is locked by pressing the padlock symbol on the remote handset twice within one second. Superlocking immobilises the interior door handles, thereby preventing an intruder from gaining entry by smashing a window and reaching inside the vehicle to operate the door handles.

WARNING

For safety, NEVER use Superlocking if passengers are to remain inside the vehicle - in an emergency they would not be able to escape.

Mislock
If one of the doors, taildoor or hood is not properly closed when the alarm is armed, a mislock occurs (the horn will sound a warning). The alarm will still be armed and the engine immobilised, but the open aperture will not be protected. If the appropriate aperture is then closed, the alarm will fully arm without the need to press the lock button again unless the driver's door is open, in which case the alarm will be fully armed by pressing the lock button again.

If the taildoor glass is left open when the alarm is armed, the horn will sound as a reminder, but the vehicle will be locked and alarmed as normal. The taildoor glass can be closed from outside the vehicle using the starter key in the taildoor (see *'Raising and lowering', page 72*).

Anti-theft alarm indicator light

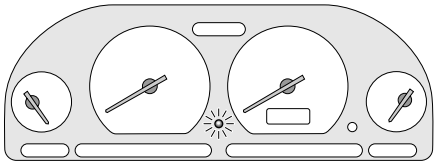
H3298

After locking, the RED indicator light on the instrument panel flashes rapidly while the alarm is arming itself.

After approximately 10 seconds, the indicator light adjusts to a slower frequency, and continues to flash as an anti-theft deterrent until the alarm is disarmed.

Unlocking
With the remote handset:
If your vehicle is configured with the Single Point Entry security feature, and was locked with the handset, the handset unlocks the vehicle in two stages:

- Press the unlock (Land Rover) button once to disarm the alarm and unlock the driver's door only (see *'Single point entry', page 30*).
- Press the unlock button twice to disarm the alarm and unlock ALL the doors.

If your vehicle is not configured with Single Point Entry, all the doors will unlock at the first press.

In either case, the direction indicators flash once and the interior lights illuminate.

With the key:
Turn the key towards the front of the vehicle. The alarm will be fully disarmed. To remobilise the engine, the key must be inserted into the starter switch.

WWW.MANUALS.WS

WWW.MANUALS.WS

If the alarm sounds
If the alarm is triggered, it will sound for approximately 30 seconds before switching itself off and can be triggered up to ten times in total before needing to be reset.

To silence the alarm, press either handset button, or operate the door locks using the key in the driver's door.

Single point entry
This is a personal security feature, which enables the driver's door only to be unlocked, leaving the other doors in a locked state. It can be operated by the remote handset as follows:

Press the unlock button once to unlock the driver's door, press a second time to unlock the remaining doors and taildoor.

Single point entry can be configured by a Land Rover retailer.

Interior locking switch

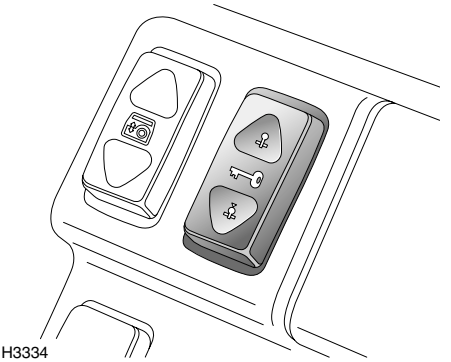

This is a personal security feature which allows the driver to lock (or unlock) all the doors from inside the vehicle (while driving or with the vehicle stationary). Press the lower part of the switch to lock (the alarm will not be armed), and the upper part to unlock.

NOTE: *If interior locking has been activated, pull the interior door handle once to unlock, and twice to open the door.*

Door handles and door sill locking buttons
From inside the vehicle, each door can be individually locked by depressing the appropriate door sill button. However, doors cannot be unlocked by raising the sill button.

Use the door handles to unlock, as follows:

- First operation of the door handle unlocks the door.
- Second operation of the door handle opens the door.

NOTE: *The door handles will not open the doors if the vehicle has been superlocked (see ‘Superlocking’, page 29)*

WWW.MANUALS.WS

WWW.MANUALS.WS

CHILD-PROOF LOCKS

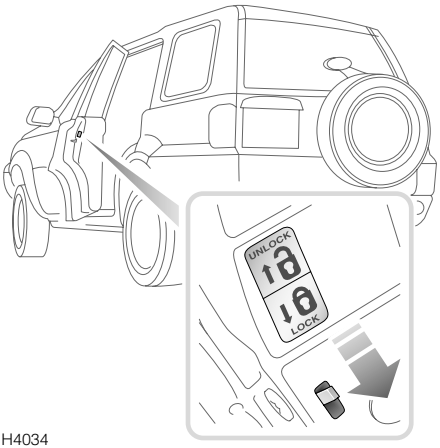

H4034

Move the lever on the rear doors down (see inset) to engage.

With the child-proof locks engaged, the rear doors cannot be opened from inside the vehicle, thereby avoiding the risk of a door being opened accidentally while the vehicle is moving.

WARNING

To avoid injury or even death, NEVER leave children unsupervised in the vehicle.

ENGINE IMMOBILISATION

Engine immobilisation is an important aspect of the security system and is designed to safeguard the vehicle from theft, should the driver forget to lock the doors. Engine immobilisation prevents the engine from being started unless a valid key is inserted into the starter switch, and occurs automatically after the starter switch has been turned off.

The engine is re-mobilised by a signal transmitted from a transponder contained within the key head, to the starter switch. This occurs automatically whenever a valid key is inserted into the starter switch and turned to position ‘I’.

CAUTION: DO NOT keep more than one starter key, or keys from other vehicles, or gas station speed payment devices on the same key ring: the engine will not re-mobilise automatically.

WWW.MANUALS.WS

WWW.MANUALS.WS

DOOR LOCKING CUT-OFF SWITCH

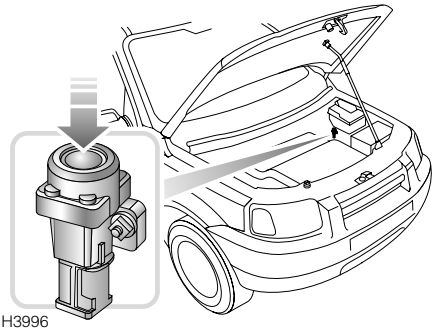

An inertia switch, which operates when the starter switch is in position 'II', prevents the doors from centrally locking (or, if the doors are already locked, unlocks them) in the event of an accident or sudden impact. If this occurs, central locking will be inhibited until either:

- the starter switch is turned off and the driver's door has been opened and closed, or:
- the driver's door has been opened and closed, and the inertia switch is reset.

The inertia switch is located inside the engine compartment on the left hand side, beneath, and to the rear of, the engine compartment fuse box (a label attached to the bulkhead will assist in locating the switch). The switch must be reset before the engine can be restarted. Reset the switch by pressing the rubber top (arrowed in illustration).

This will also reset the fuel system, see *'FUEL CUT-OFF SWITCH', page 100*).

WARNING

ALWAYS check for fuel leaks before resetting the switch! Activating the switch when the fuel system has been damaged (evidenced by fuel leakage or odor) will cause additional fuel leakage increasing the risk of fire.

MANUALS.WS

WWW.MANUALS.WS

REMOTE HANDSET BATTERY

The battery should last for approximately three years dependent upon use. When the battery needs replacing it will be apparent from the following symptoms:

- A gradual deterioration in range and performance.
- The alarm buzzer and the anti-theft alarm indicator light will double bleep/flash every second, for ten seconds, after the alarm is disarmed and driver's door opened.

It is recommended that you fit a Land Rover STC 4080 or a Panasonic CR2032 replacement battery (available from a Land Rover retailer).

CAUTION: The handset contains delicate electronic circuits and must be protected from impact and water damage, high temperatures and humidity, direct sunlight and the effects of solvents, waxes and abrasive cleaners.

Battery replacement

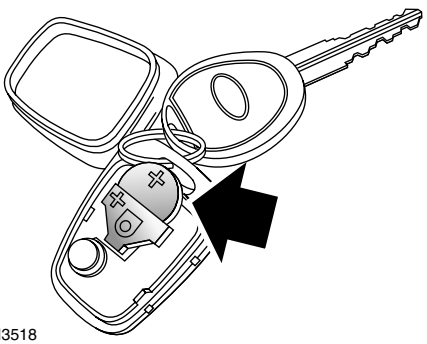

H3518

1. Carefully prise the handset apart, start from the keyring end using a small coin or screwdriver. Avoid damaging the seal between the two halves of the case and DO NOT allow dirt or moisture to get inside the handset.
2. Slide the battery out of its clip, taking care to avoid touching the circuit board or the contact surfaces of the clip.
3. Press and hold each button in turn for at least five seconds (this will drain any residual power from the handset).
4. Fit the new battery, ensuring that correct polarity is maintained ('+' side facing up). Finger marks will adversely affect battery life; if possible, avoid touching the flat surfaces of the battery and wipe them clean before fitting.
5. Press the two halves of the handset firmly together and ensure that both halves are fully joined to prevent dirt or moisture from entering the handset.
6. Resynchronise the handset.

The handset is now ready for use.

Handset resynchronisation

If the handset fails to lock or unlock the car, this may be because the coded signal transmitted by the handset, and the signal expected by the alarm control unit, are no longer synchronised.

To resynchronise the handset, operate either button of the handset at least five times in quick succession (in close proximity to the vehicle).

WWW.MANUALS.WS

WWW.MANUALS.WS

ALARM OR HANDSET DIFFICULTIES

Alarm goes off unexpectedly.	Ensure all windows, doors, hood and sunroof are closed.
Vehicle will not start.	Press unlock button on handset. If it still will not start, consult your Land Rover retailer.
Hazard lights don't flash when alarm is armed.	Ensure all doors and the hood are fully closed.
Doors unlock and hazard lights start to flash when vehicle is in motion.	The inertia switch has been triggered - see *'DOOR LOCKING CUT-OFF SWITCH', page 32*. If fault continues, consult your Land Rover retailer.

WWW.MANUALS.WS

WWW.MANUALS.WS

OPENING AND CLOSING

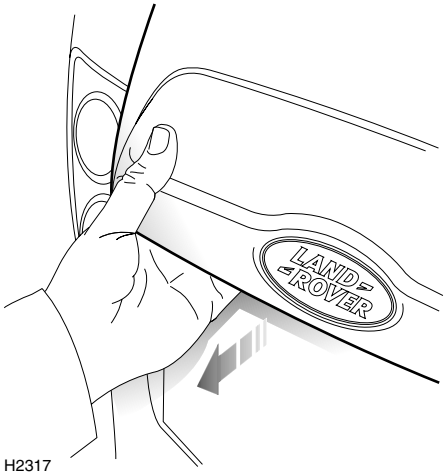

Opening the taildoor

When the release catch is pulled (as shown in illustration), the taildoor lock is released in two phases:

1. the taildoor glass drops clear of its retaining channel.
2. the electronic door latch is released and the door can be opened.

Initially, the door opens approximately half way until resistance is felt; this prevents the door swinging fully open and possibly hitting an obstruction, yet still enables access in a situation where there is not enough room to open the door fully. Push against resistance to open the door fully.

NOTE: *The taildoor latch will not operate if the glass is frozen to the door seals, as the glass needs to drop slightly before the door can be opened. Defrost the glass first.*

WARNING

You are advised NOT to carry loads which require driving with the taildoor or taildoor window open - poisonous fumes will be drawn into the vehicle! If driving the vehicle in this condition is unavoidable, switch the heater to face level vents with all vents open, close the sunroof and windows and turn the air blower to position 4.

Closing

CAUTION: When closing the taildoor, push on the handle - NOT on the taildoor glass.

Load carrying

Long loads should be carried on the roof rack. If it is necessary to carry a load that protrudes through the taildoor window aperture, the weight of the load must NOT rest on the glass. Damage to the glass or window mechanism may occur.

WWW.MANUALS.WS

WWW.MANUALS.WS

SEATING

WARNING

It is extremely dangerous to ride in the cargo area, inside or outside the vehicle. In a collision, people riding in these areas are more likely to be seriously injured or killed. Do not allow people to ride in any area of your vehicle that is not equipped with seats and safety belts. Be sure everyone in your vehicle is in a seat and using a safety belt properly.

SITTING CORRECTLY

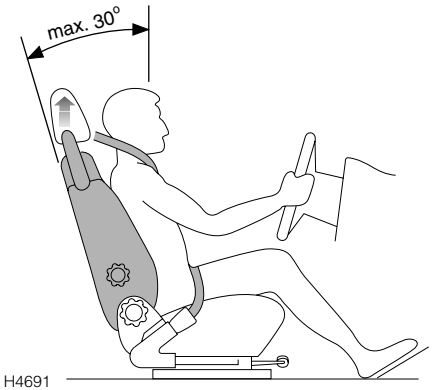

The seats, head restraints, seat belts and airbags all contribute to the protection of the occupants. Optimal use of these components will give you more protection. Therefore, observe the following points:

- Sit in the most upright position with the base of your spine as far back as possible and the backrest not reclined more than 30 degrees.
- Adjust the head restraints so that the top of the head restraint is level with the upper portion of the head.
- Do not move the front seat too close to the instrument panel. The driver should hold the steering wheel with slightly bent arms. The legs should also be slightly bent so that the pedals can be pressed to the floor.
- The seat belt should rest in the center of the shoulder. The lap part should fit tightly across the hips and not on the stomach.

FRONT SEAT ADJUSTMENT

WARNING

To avoid the risk of loss of control and personal injury, DO NOT adjust the driver's seat or head restraint while the vehicle is in motion.

DO NOT travel with the seat backs reclined rearwards more than 30 degrees. Optimum benefit is obtained from the seat belt, with the backrest angle set to 25 degrees from the upright (vertical).

An inflating airbag can cause facial abrasions and other injuries. The injurious effects of airbag inflation can be minimised by ensuring that driver and passenger are seated correctly, with the seat moved back as far as is practical, and the seat belts worn correctly.

Forward/backward adjustment
Lift the lever (1) and slide the seat into position. Make sure the seat is locked in position before driving.

Backrest adjustment
Rotate the handwheel (2) to adjust.

Lumbar support adjustment
(Driver's seat only)
Rotate the handwheel (3) to increase or decrease support to the lumbar region of the back.

WWW.MANUALS.WS

WWW.MANUALS.WS

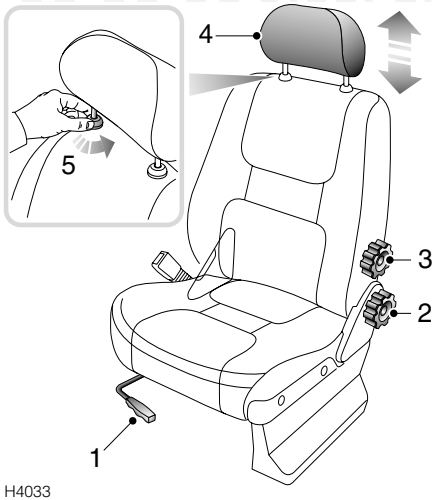

H4033

Head restraint adjustment

WARNING

Head restraints are designed to support the back of the head (NOT THE NECK), and to restrain rearward movement of the head in the event of a collision. The restraint must be positioned level with the head to be effective.

DO NOT drive or carry passengers with the head restraints removed from occupied seats, or adjust the head restraints while the vehicle is in motion.

Failure to have the head restraint installed and properly positioned will increase the potential for serious injuries.

Raise or lower the restraint (4), until the cushion is level with the back of the head.

Head restraint removal
Turn the right-hand mounting (5) a quarter turn anti-clockwise and pull the restraint upwards.

After replacing a head restraint, turn the right-hand mounting clockwise.

Rear seats
For information on folding the rear seats, refer to *'FOLDING THE REAR SEATS', page 38*.

Heated front seats*
For information on the operation of the front seat heaters, refer to *'HEATED FRONT SEATS*', page 81*.

WWW.MANUALS.WS

WWW.MANUALS.WS

FOLDING THE REAR SEATS

On vehicles not fitted with 60/40 split rear seats the whole seat can be folded forwards to increase luggage space. On vehicles fitted with 60/40 split rear seats, either or both parts of the seat can be folded.

NOTE: *Before folding the rear seats, ensure that the center rear seat belt is unbuckled.*

WARNING

Ensure that the rear seat backrests are securely latched in the upright position when the seat is in use and when loads are carried in the luggage area.

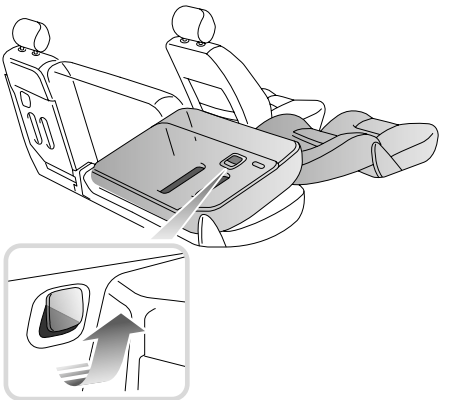

H4804

Lift the release levers (see inset) to release the backrest (lift both levers simultaneously on vehicles without 60/40 split seats) and fold the backrest forwards.

WARNING

DO NOT carry unsecured equipment, tools or luggage that could move, causing personal injury in the event of an accident, or emergency maneuver - where possible, use the seat belts to secure luggage carried on the seats.

Accommodating long loads

Remove the head restraints from the front passenger and rear seats (see *'Head restraint removal', page 37*), move the front passenger seat forwards as far as possible and fully recline the seat backrest. Finally, fold the backrest (or the appropriate part of the backrest in the case of 60/40 split seats) fully forward as shown.

Loads that are too long to be carried inside the vehicle should be carried on the roof (see *'ROOF RACK*', page 125*).

If it is necessary to carry a load that protrudes through the taildoor, or taildoor window, be aware of any territorial restriction restricting the length of any such load. In addition, ensure that loads DO NOT rest on the glass of a partially open window. Damage to the glass or window mechanism may occur.

WARNING

You are advised NOT to carry loads which require driving with the taildoor or taildoor window open - poisonous fumes will be drawn into the vehicle! If driving the vehicle in this condition is unavoidable, switch the heater to face level vents with all vents open, close the sunroof and windows and turn the air blower to position 4.

WWW.MANUALS.WS

WWW.MANUALS.WS

Maximum luggage space

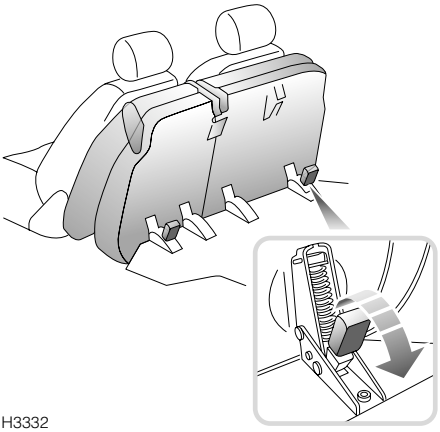

H3332

To create an extra large luggage area:

1. Lift the seat release levers to release the backrest and fold the seat backrest forward.
2. Tip the whole seat assembly forward as shown in illustration and readjust the front seats as required.

To return the seats to their normal position; push the seat base release levers (shown in lower inset) rearwards to unlock the seat base and unfold the seats. Ensure the seat backrests are properly secured by attempting to push them forwards - there should be no movement.

'Latch secure' indicator

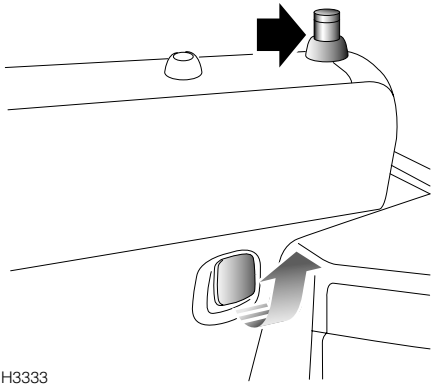

H3333

A 'latch secure' indicator, mounted on the top of the right hand side of the rear seat backrest, will pop up showing a red band, when the catch is released.

When returning the seat to the upright position, ensure the indicator drops back into the backrest and that the red band is no longer visible - this confirms that the larger portion of the backrest is secure.

NOTE: *The 'latch secure' indicator does NOT indicate that the smaller portion of the 60/40 split backrest is secure - this must be checked individually.*

WARNING

When returning the seats to the upright position, ensure that the seat belts are not trapped.

WWW.MANUALS.WS

WWW.MANUALS.WS

SEAT BELT SAFETY

WARNING

Seat belts are life-saving equipment. In a collision, occupants not wearing a seat belt can be thrown around inside, or possibly thrown out of, the vehicle. This is likely to result in more serious injuries than would have been the case had a seat belt been worn. It may even result in loss of life!

Don't take chances with safety!

- ***DO make sure that ALL occupants are securely strapped in at all times - even for the shortest journeys.***
- ***The airbag supplemental restraint system (SRS) is designed to add to the overall effectiveness of the seat belts. It does not replace them. SEAT BELTS MUST ALWAYS BE WORN!***
- ***Ensure that all seat belts are worn correctly - an improperly worn seat belt increases the risk of death or serious injury in the event of a collision.***
- ***DO use the seat belts to secure items of luggage that are to be carried on the seats - in the event of an accident, loose items become flying missiles capable of causing serious injury, or even death.***

WARNING

- ***DO NOT fit more than one person into a belt; this could result in the occupants striking each other and causing injury in the event of a crash.***
- ***DO NOT use, or attempt to fit, a seat belt that is twisted or obstructed in any way that could impede its smooth operation. If a belt is twisted, it must be straightened before use. Using a twisted or obstructed seat belt could increase the risk of injury in a crash.***
- ***ALWAYS use the seat belt lock (buckle) nearest the wearer. If the belt is locked in the wrong place, the seat belt will not fit correctly and may ride up over the abdomen, causing serious internal injury in a crash.***
- ***ALWAYS transport children 12 years old and under in the back seat and always properly use appropriate child restraints.***
- ***For children that are too small to fit the 3-point seat belt properly, the use of appropriate child safety seats or belt-positioning booster seats is recommended.***

NOTE: *For additional information, (see ‘CHILD RESTRAINTS FOR SMALL CHILDREN AND BABIES’, page 45).*

WWW.MANUALS.WS

WWW.MANUALS.WS

WEARING SEAT BELTS CORRECTLY

Fastening the seat belts

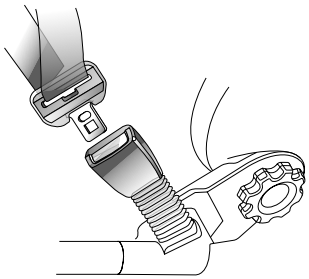

H3303

Inertia reel belts are fitted to all front and rear seating positions.

Draw the belt over the shoulder and across the chest and, ensuring that the webbing is not twisted, insert the metal tongue plate into the buckle nearest the wearer - a 'CLICK' indicates that the belt is securely locked.

In some circumstances, perhaps due to the vehicle being parked on a slope, the inertia mechanism may engage, preventing the initial extension of a belt. This is not a fault - ease the belt free and use it.

NOTE: *The center rear seat belt tongue plate will not latch into either of the outer seating position buckles.*

NOTE: *Where possible, rear seat passengers should adjust their position on the seat to enable the seat belt webbing to cross the shoulder without pressing on the neck.*

Adjust the seat belt to eliminate any slack in the webbing. DO NOT slacken the webbing by holding the belt away from the body - to be fully effective, the seat belt must remain in full contact with the body at all times. Also, ensure that the lap belt fits as low on the hips as possible and that the shoulder belt passes across the shoulder without slipping off or pressing on the neck.

Positioning the belt

WARNING

Seat belts are designed to bear upon the bony structure of the body (pelvis, chest and shoulders), and can only be worn safely with the seats in a normal, upright, position.

- ***ALWAYS fit the lap strap as low on the hips as possible (never across the abdomen) and ensure that the diagonal belt passes across the shoulder without slipping off or pressing on the neck.***
- ***DO NOT travel with the seat backs reclined steeply rearwards. Optimum benefit from the seat belt is obtained with the seat back set to an angle of 30 degrees from the upright (vertical). Seat belts are only effective when they are properly positioned on the body - a steeply reclined seat could allow a passenger to slip under either the shoulder or the lap belt.***
- ***DO NOT wear the shoulder belt under your arm. In an accident this could increase your chances of being injured.***

MANUALS.WS

WWW.MANUALS.WS

Wearing seat belts during pregnancy
The seat belts have been designed for all adults, including pregnant women. In a crash situation any occupant is less likely to be injured while correctly restrained by a seat belt. However, pregnant women should wear the lap belt as low on the hips as possible to avoid pressure on the abdomen.

Women should consult their doctor to establish the best use of seat belts during pregnancy.

Upper anchorage adjustment (5-door vehicle,front seats only)

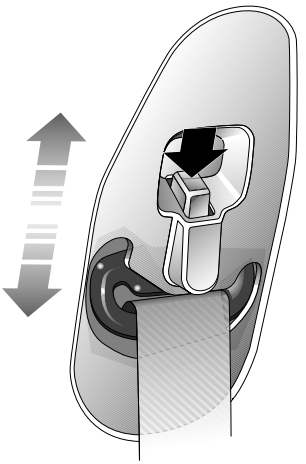

H2344A

The height of the seat belt upper anchorage can be adjusted for comfort AND safety. Adjust the height of the anchorage point by pressing the button (arrowed in illustration). For safety, the seat belt should always be worn with the webbing crossing the shoulder MIDWAY BETWEEN THE NECK AND THE EDGE OF THE SHOULDER.

WARNING

Misadjustment of the seat belt could reduce its effectiveness in a crash. Always ensure that the anchorage is correctly located and properly locked in one of the height positions before driving and DO NOT adjust the height once the vehicle is in motion.

Where possible, rear seat passengers should adjust their position on the seat to enable the seat belt webbing to cross the shoulder without pressing on the neck.

WARNING

Always transport children 12 years and under in the back seats and always properly use appropriate child restraints.

For children that are too small to fit the 3-point seat belt properly, the use of appropriate child safety seats or belt-positioning booster seats is recommended.

NOTE: *For additional information, (see ‘CHILD RESTRAINTS FOR SMALL CHILDREN AND BABIES’, page 45).*

Releasing the belt
Press the RED button on the seat belt buckle.

WWW.MANUALS.WS

WWW.MANUALS.WS

FRONT SEAT BELT PRE-TENSIONERS

The seat belt pre-tensioners activate in conjunction with the airbag SRS and provide additional protection in the event of a severe frontal impact on the vehicle (see *'HOW THE AIRBAG SRS WORKS', page 51*). The pre-tensioners reduce any slack in both the lap and diagonal portions of the belts, thereby reducing forward movement of the belt wearer in the event of a severe frontal collision.

The airbag SRS warning light on the instrument panel will alert you to any malfunction of the seat belt pre-tensioners.

If the pre-tensioners have been activated, the seat belts will still function as restraints, and must be worn in the event that the vehicle remains in a driveable condition.

NOTE: *The seat belt pre-tensioners will NOT be activated by rear, side or minor frontal impacts.*

WARNING

After the seat belt pre-tensioners have been activated once, they MUST BE REPLACED by a Land Rover retailer. Failure to replace the pre-tensioners will reduce the efficiency of the vehicle's front restraint systems.

After any frontal impact, always have the seat belts and pre-tensioners checked and, if necessary, replaced by a Land Rover retailer.

In the interests of safety, it is recommended that removal or replacement of the front seats and seat belts, with the use of factory-specified parts, should ONLY be carried out by a Land Rover retailer.

Service information

WARNING

DO NOT attempt to service, repair, replace, modify or tamper with any part of the pre-tensioner and airbag SRS, or wiring in the vicinity of a pre-tensioner or airbag SRS component; this could cause the system to activate, resulting in personal injury.

After a number of years from the original date of registration (or the installation date of a replacement pre-tensioners), some components will need to be replaced by a Land Rover retailer. These replacement dates are shown in the Passport to Service.

In addition, ALWAYS contact your retailer if:

- an airbag inflates.
- a pre-tensioner activates.
- the front or side of the vehicle is damaged, even if the pre-tensioner has not activated.

WWW.MANUALS.WS

WWW.MANUALS.WS

CARE & MAINTENANCE OF SEAT BELTS

WARNING

- ***DO NOT allow foreign matter (particularly sugary food and drink particles) to enter the seat belt locks - such substances can render the locks inoperative.***
- ***Regularly inspect the belt webbing for signs of fraying, cuts and wear, and also pay particular attention to the condition of the fixing points and adjusters.***
- ***DO NOT bleach or dye the webbing. Clean the webbing using warm water and non-detergent soap only - allow to dry naturally and DO NOT retract or use the belts until they are completely dry.***
- ***Always replace a seat belt that shows signs of webbing wear or has withstood the strain of a severe vehicle impact.***

Testing inertia reel belts

- With the seat belt fastened, give the webbing near the buckle a quick upward pull. The buckle must remain securely locked.
- With the seat belt unfastened, unreel the webbing to the limit of its travel. Check that unreeling is free from snatches and snags and then allow the belt to FULLY retract.
- Partially unreel the webbing, then hold the tongue plate and give it a quick forward pull. The mechanism must lock automatically and prevent any further unreeling.

If a seat belt should fail any of these tests, contact your retailer immediately.

WWW.MANUALS.WS

WWW.MANUALS.WS

CHILD RESTRAINTS FOR SMALL CHILDREN AND BABIES

Infants and children too small for adult seat belts should be restrained in a child safety seat or restraint system appropriate to their age and/or size.

Child seats and restraint systems designed for your vehicle will be one of two types:

- Those secured in vehicle seats by the seat belts.
- 'LATCH' type child restraints employing anchor bars built into the rear seat frame.

All new and most older type child restraint systems incorporate a tether strap which can be attached to an anchorage point on the vehicle. Information about tether strap attachment points and the seat belt locking mechanism, which is used to restrain child seats and restraints, is shown later in this section.

CAUTION: When fitting child seats and restraint systems, always ensure that the manufacturer's fitting instructions are followed exactly. Note that crash statistics show that children are safer when properly restrained in the rear seating positions than in the front.

CHILD RESTRAINTS FOR LARGER CHILDREN

In a situation where a child is too large to fit into a child safety seat, but is still too small to safely fit the 3 point seat belt properly, a booster seat is recommended for maximum safety. Follow the manufacturer's fitting instructions exactly, then adjust the seat belt to suit.

WARNING

- ***DO NOT allow a baby or infant to be carried on the lap. The force of a crash can increase effective body weight by as much as 30 times, making it impossible to hold on to the child.***
- ***Children typically require the use of a booster seat appropriate to their age and size, thereby enabling the seat belts to be properly fitted, reducing the risk of injury in a crash.***
- ***Children could be endangered in a crash if their child restraints are not properly secured in the vehicle.***
- ***DO NOT use a child seat that hooks over the seat back. This type of seat cannot be satisfactorily secured, and is unlikely to be safe for your child.***
- ***Never leave a child unattended in your vehicle.***

WWW.MANUALS.WS

WWW.MANUALS.WS

Vehicles fitted with a passenger airbag
Children under 12 years should travel in the rear of the vehicle at all times. Crash statistics show that children are safer when properly restrained in the rear seating positions than in the front.

However, if it is essential that a child travel in the front, set the seat fully rearward and seat the child in an approved, FORWARD FACING child seat.

The above symbol affixed to the passenger side facia panel of your vehicle, warns against the use of a REAR FACING child seat in the front passenger seat, when a passenger airbag is fitted. This type of child seat could cause serious injury to a child in the event of an airbag deployment.

Take careful note of all labels concerning child restraint useage, attached to your vehicle.

WARNING

EXTREME HAZARD! Under no circumstances should a rearward-facing child seat be installed in any front passenger seat position. Inflation of the airbag could result in serious injury or death to the child.

Seat belt locking mechanism
All front passenger and rear seat belts have a special locking mechanism which aids the securing of child restraints. The mechanism is used to secure a child restraint as follows:

1. Attach the seat belt to the child restraint in accordance with the manufacturer's instructions.
2. Insert the metal tongue of the seat belt into the lock ensuring that it engages with a 'click'.
3. Pull on the shoulder section of the belt until it is fully extended.
4. Allow the belt to retract. A 'clicking' sound will confirm that the mechanism has engaged.
5. Remove all slack from the mechanism, by pulling upwards on the shoulder belt, immediately above the child restraint.
6. Evaluate the tightness of the installation by rocking the child seat back and forth to ensure it is tight and stable.
7. If the child seat needs to be tightened further, remove the metal tongue of the seat belt from the buckle and feed some of the shoulder belt webbing back into the reel (thereby shortening the belt). Then re-attach the metal tongue into the buckle (if the belt has been tightened correctly, this will take some effort).
8. Re-evaluate the tightness of the installation. If the child seat is still too loose, repeat the above procedure, making the belt incrementally shorter (and therefore tighter). It may be necessary to put your weight onto the seat (to compress the seat cushion) in order to fasten the belt.

To deactivate the locking mechanism, unlatch the seat belt and allow it to fully retract.

WWW.MANUALS.WS

WWW.MANUALS.WS

TETHER STRAP ANCHORAGES

Provision is made for the fitting of up to three child seats or restraint systems in the rear seats, of the type that require tether strap anchorage points.

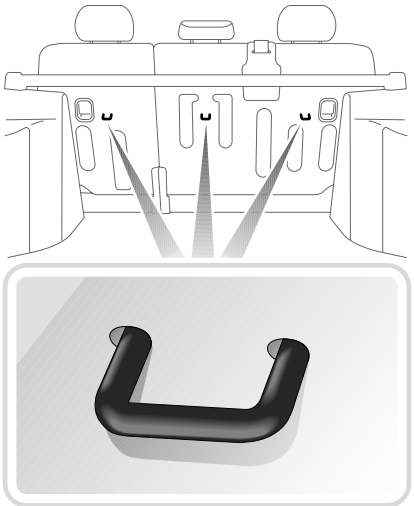

H4240

WARNING

Child restraint anchorages are designed to withstand only those loads imposed by correctly fitted child restraints. Under no circumstances should they be used for adult rear seat belts or for harnesses for attaching other items or equipment to the vehicle.

There are three tether strap anchorage points. These should be used to attach tether straps from child seats or restraint systems. All three anchorage points are fitted to the back of the rear seat (shown in the accompanying illustration).

Attaching tether straps

1. Install the child restraint securely in one of the rear seating positions.
2. Pass the tether strap over the back of the vehicle seat and beneath the underside of the head restraint.
3. Attach the clip on the head of the tether strap to the tether anchor on the back of the vehicle seat.
4. Tighten the tether strap according to the manufacturer's instructions to remove any slack in the webbing.

WARNING

- ***Always follow the child seat or restraint system manufacturer's instructions when fitting tether straps.***
- ***When fitting a child seat or restraint system, always pass the tether strap over the top of the seat back and beneath the underside of the head restraint.***
- ***If a child seat or restraint system is to be fitted to the center seating position, the center armrest must be in the stowed position (folded into the seat).***

WWW.MANUALS.WS

WWW.MANUALS.WS

‘LATCH’ TYPE CHILD RESTRAINTS

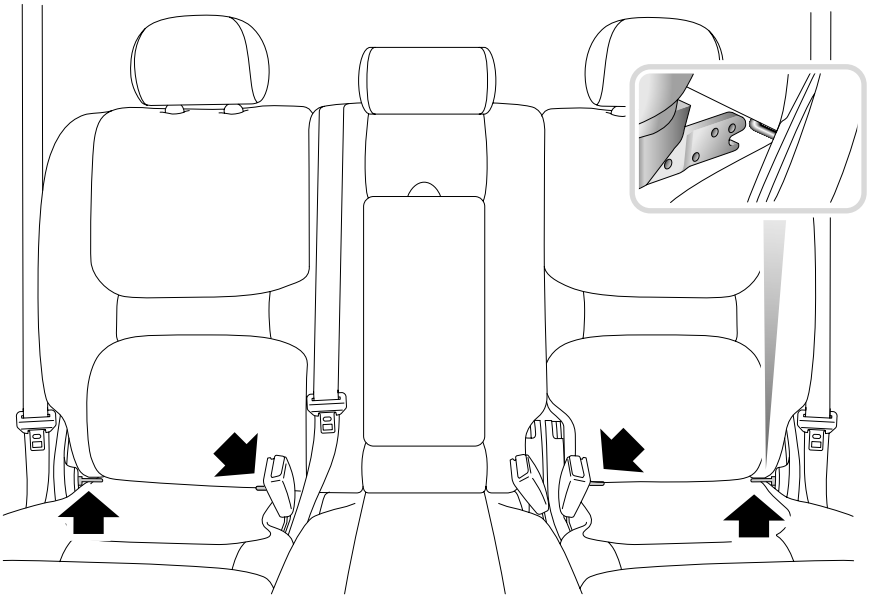

H4322

‘LATCH’ (Lower Anchors and Tether for Children)
The ‘LATCH’ three-point type child restraint system complies with Federal Motor Vehicle Safety Standards and is approved for fitting in your vehicle.

Fitting the restraints
This type of child restraint system should only be fitted in the two outer seating positions of the second row seats. Anchor bars built into the rear seat frame enable ‘LATCH’ type restraints to be securely attached to the vehicle seat in these positions only. The anchor bar locations are shown in the illustration above.

Pass the tether strap over the top of the seat back and beneath the underside of the head restraint. Attach the clip on the head of the tether strap to the appropriate tether anchor and tighten the tether strap.

WARNING

If the restraint is not correctly anchored, there is a significant risk of injury to the child, in the event of a collision or emergency braking.

DO NOT attempt to fit ‘LATCH’ type restraints to the center seating position - the anchor bars are designed to hold restraints in the outer seating positions only.

When fitting this type of child restraint, always follow the instructions supplied by the manufacturer of the restraint.

Once the restraint is installed, test the security of the installation before seating the child. Attempt to twist the restraint from side to side, and to pull the restraint away from the vehicle seat, then check that the anchors are still securely in place.

WWW.MANUALS.WS

WWW.MANUALS.WS

AIRBAG SUPPLEMENTAL RESTRAINT SYSTEM (SRS)

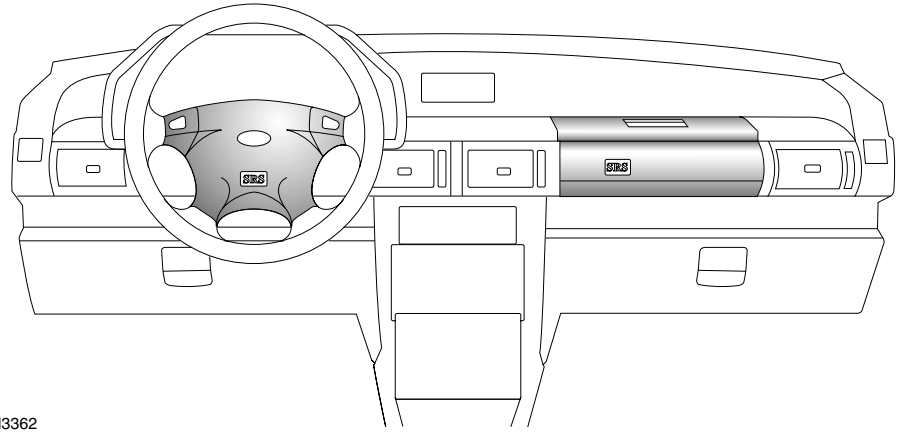

H3362

The airbag supplemental restraint system (SRS) provides additional protection for the driver and front seat passenger, in the event of a severe frontal impact on the vehicle.

WARNING

Always remember; the SRS/airbags are a supplemental restraint system providing ADDITIONAL protection in certain types of frontal impact collisions only - they DO NOT replace the need to wear a seat belt. To reduce the risk of severe injury or death in the event of a crash, all occupants in all seating positions including the driver, should always wear their seat belt whether or not an airbag is present in that seating position!

Provided the front seat occupants are correctly seated, with seat belts properly worn, the airbags will provide additional protection to the chest and facial areas in the event of the vehicle receiving a severe frontal impact.

NOTE: *Inflation and deflation of the airbags takes place very quickly and will not protect against the effects of secondary impacts that can occur during multiple vehicle collisions.*

The airbags are located in the center pad of the steering wheel and the facia panel above the glovebox.

WWW.MANUALS.WS

WWW.MANUALS.WS

WARNING

Following inflation, some SRS/airbag components are hot - DO NOT touch until they have cooled.

Even with SRS/airbag equipment fitted, seat belts must ALWAYS be worn because:

- ***An airbag will only provide additional protection in certain types of frontal collisions. NO protection is afforded against the effects of side or rear impacts, rollover accidents, or minor frontal impacts.***
- ***Inflation and deflation take place instantaneously and will not provide protection against the effects of secondary impacts that can occur during multiple vehicle collisions.***

WARNING

The airbag module inflates with considerable speed and force. For your safety:

An inflating airbag can cause facial abrasions and other injuries. The injurious effects of airbag inflation can be minimized, by ensuring driver and passenger are seated correctly, with the seat moved back as far as is practical, and the seat belts worn correctly.

National Highway Traffic Safety Administration (NHTSA) recommends a minimum distance of 10 inches (25 cm) between the occupant's chest and the driver's airbag module.

NEVER attach accessory items to an airbag module cover, or place items of hand luggage or any objects on the top of a module cover. These could interfere with the inflation of the airbag, or if the airbag inflates, be propelled inside the vehicle causing injury or death to the occupants.

DO NOT allow occupants to obstruct the operation of the airbag modules by placing their feet, knees or any part of their person in contact with, or close to, an airbag module whilst the vehicle is moving.

When an airbag inflates, a fine powder is released. This is not an indication of a malfunction. However, the powder may cause irritation to the skin and should be thoroughly flushed from the eyes and any cuts or abrasions of the skin.

Both front seating positions are equipped with knee bolsters to provide knee protection in the event of an impact. DO NOT modify the bolsters, or mount after-market equipment on or behind them.

WWW.MANUALS.WS

WWW.MANUALS.WS

Seating positions

In order to provide optimum protection in the event of a severe frontal impact, it is necessary for the airbags to deploy with considerable speed.

An inflating airbag can cause facial abrasions and other injuries if the occupant is too close to the airbag at the time of its deployment.

WARNING

To reduce the risk of accidental injury from inflating airbags, seat belts should be correctly worn at all times. In addition, both driver and front seat passenger should adjust their seat to provide the maximum practical distance from the front airbags.

Occupants not seated correctly in allocated seats can be subject to serious injury or death upon airbag deployment.

Never place your arm over an air bag module as a deploying air bag can result in serious arm fractures or other injuries.

HOW THE AIRBAG SRS WORKS

In the event of a severe frontal impact, the airbag control unit monitors the rate of deceleration induced by the collision, to determine whether the airbags should be deployed.

Operation of the airbag SRS is dependent entirely on the rate at which the vehicle's passenger compartment changes speed as a result of a collision. The circumstances affecting different collisions (vehicle speed, angle of impact, type and size of object hit, for example), vary considerably and will affect the rate of deceleration accordingly.

NOTE: *The SRS/airbag is not designed to activate in all frontal impacts; most minor frontal impacts, heavy braking and driving over pot holes will not result in sufficient deceleration to cause the airbags to inflate. This does not indicate that there is a fault with the system. However, if as a result of an impact, you believe the airbags should have deployed and they failed to do so, please call 1(800)637-6837 for advice, or to arrange for a Land Rover representative to inspect the vehicle to determine whether the system operated correctly.*

It follows, therefore, that significant superficial damage can occur without the airbags deploying or, conversely, that a relatively small amount of structural damage may cause the airbags to be deployed.

Airbags will only deploy when they are required to supplement the restraining force of the seat belts.

In the case of a severe frontal collision, both front airbags and seat belt pre-tensioners will be deployed.

WWW.MANUALS.WS

WWW.MANUALS.WS

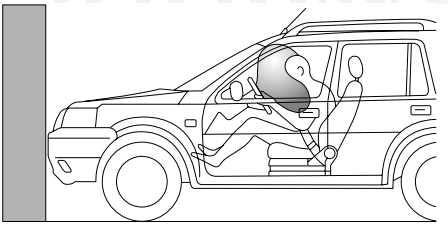

H3307

Airbag inflation is virtually instantaneous and occurs with considerable force, accompanied by a loud noise. The inflated bag, together with the seat belt restraint system, limit the movement of a front seat occupant, thereby reducing the risk of injury to the head and upper torso.

When an airbag inflates, a fine powder is released. This is not an indication of a malfunction, however, the powder may cause irritation to the skin and should be thoroughly flushed from the eyes and any cuts or abrasions of the skin. After inflation the airbags deflate immediately. This provides a gradual cushioning effect for the occupant and also ensures that the driver's forward vision is not impaired.

WARNING

After inflation, some airbag components are hot - DO NOT touch until they have cooled.

Airbag SRS warning light

Whenever the starter switch is turned to position ‘II’, the diagnostic control unit monitors the readiness of the system's electrical circuits. The elements of the system being monitored include:

- SRS warning light
- Rotary coupler
- Airbag modules
- Airbag diagnostic control unit
- Airbag wiring harness

WARNING

A warning light mounted on the instrument panel will alert you to any malfunction of the SRS/airbag. The system should always be checked by a retailer if any of the following symptoms occurs. These indicate a fault, which may result in the SRS/airbag not operating as required in the event of a frontal impact.

- ***The warning light fails to illuminate when the starter switch is turned to position ‘II’.***
- ***The warning light fails to extinguish within approximately five seconds after the starter switch is turned to position ‘II’.***
- ***The warning light illuminates after the engine is started, or while the vehicle is being driven.***

WWW.MANUALS.WS

WWW.MANUALS.WS

CHILD SEATS

Children aged 12 years and under are more likely than adult occupants to receive injuries from inflating airbags. For this reason, it is recommended that children should always be seated in the second row of seats in a child safety seat or restraint system appropriate to their age and size, (see *'CHILD RESTRAINTS FOR SMALL CHILDREN AND BABIES', page 45*, and *'CHILD RESTRAINTS FOR LARGER CHILDREN', page 45*).

If it is necessary for a child to travel in the front, set the seat fully rearwards and use a front facing child seat ONLY.

WARNING

DO NOT USE A REAR FACING CHILD SEAT IN ANY FRONT PASSENGER SEAT LOCATION. If the passenger airbag inflates, a child in a rear facing child restraint could sustain serious injury or death.

Children could be endangered in a crash if their child restraints are not properly secured in the vehicle. Be sure to install child restraints according to the manufacturer's instructions.

Under no circumstances should a rear facing child seat be installed facing forward in any seating position.

SERVICE INFORMATION

WARNING

DO NOT attempt to service, repair, replace, modify or tamper with any part of the airbag SRS, or wiring in the vicinity of an airbag SRS component; this could cause the system to activate, resulting in personal injury.

Some SRS/airbag and seat belt pre-tensioner components must be replaced by a Land Rover retailer after 10 or 15 years respectively from the date of manufacture (shown on the certification plate on the rear face of the left hand front door). See your Passport to Service for details of the dates.

In addition, ALWAYS contact your retailer if:

- an airbag inflates.
- the front of the vehicle is damaged, even if the airbag has not inflated.
- any part of an airbag module cover (the steering wheel center pad or facia panel) shows signs of cracking or damage.

WWW.MANUALS.WS

WWW.MANUALS.WS

WARNING

The components that make up the airbag SRS are sensitive to electrical or physical interference, either of which could easily damage the system and cause inadvertent operation or a malfunction of the airbag.

For your safety it is recommended that you seek the assistance of a Land Rover retailer to carry out any of the following:

- ***Removal or repair of any wiring or component in the vicinity of any of the SRS components, including the steering wheel, steering column, instrument and facia panels.***
- ***Installation of electronic equipment such as a mobile phone, two-way radio or in-car entertainment system.***
- ***Attachment of accessories to the front of the vehicle.***

WARNING

Modification of the front of the vehicle could adversely affect airbag performance and should NOT be undertaken.

Disposing of vehicles

If you sell your vehicle, be sure to inform the new owner that the vehicle has an airbag SRS and make the new owner aware that certain components of the system will need replacing after a number of years. These intervals are detailed in your Passport to Service.

If your vehicle is to be scrapped; uninflated airbags are potentially very dangerous and must be safely deployed in a controlled environment by qualified personnel, before a vehicle is scrapped.

WWW.MANUALS.WS

WWW.MANUALS.WS

STEERING COLUMN ADJUSTMENT

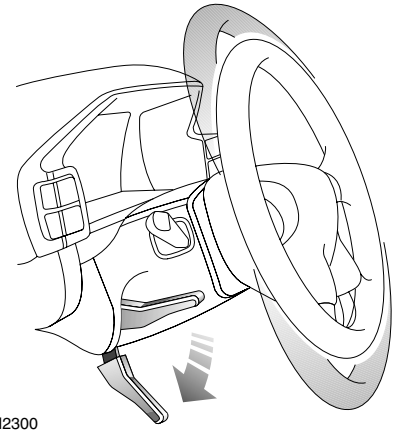

H2300

The angle of the steering column can be adjusted to suit your driving position:

1. With the vehicle stationary, push the locking lever fully down to free the steering column.
2. Move the steering wheel (up or down) into the desired position, making sure the instrument panel is clearly visible.
3. When adjustment is complete, pull the locking lever fully up to lock the steering column in position.

WARNING

DO NOT adjust the steering column while the vehicle is in motion. This is extremely dangerous and may result in loss of control of the vehicle!

DO NOT drive the vehicle unless the locking lever is in the locked position (fully up).

WWW.MANUALS.WS

WWW.MANUALS.WS

INSTRUMENT PANEL

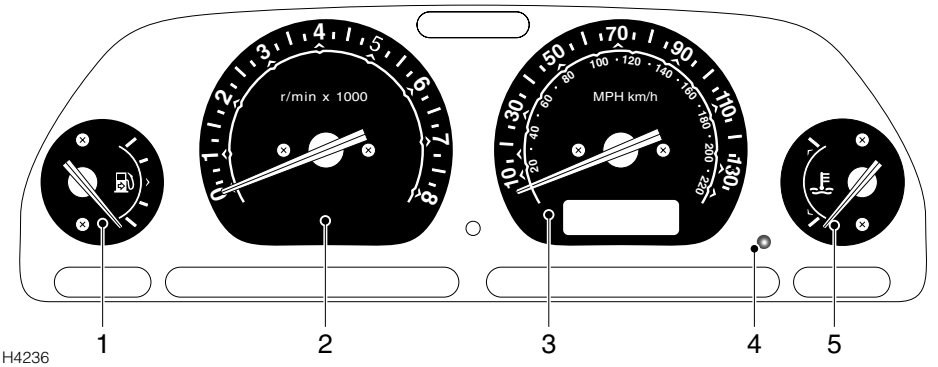

1. Fuel gauge
The pointer indicates the fuel level when the starter switch is turned to position 'II'. After refuelling, the pointer slowly rises to the new level after the starter switch is turned on. When the starter switch is turned off, the pointer quickly lowers to the 'empty' position.

An indicator light in the fuel gauge illuminates when the fuel level is low (approximately 1.8 US gallons (7 liters) fuel remaining). If the light illuminates, refuel at the earliest opportunity.

An arrow on the face of the gauge indicates on which side of the vehicle the filler is located.

CAUTION: Never allow the vehicle to run out of fuel - the resultant misfire could damage the catalytic converter.

NOTE: *Driving on twisting or hilly roads may disturb the accuracy of the fuel gauge. It is advisable to check the fuel level when the vehicle is travelling on a straight, level road.*

2. Tachometer
Indicates engine speed in revolutions per minute (x 1000). To protect the engine from damage, NEVER allow the tachometer pointer to enter the RED sector.

3. Speedometer
Indicates road speed in miles per hour and kilometres per hour.

NOTE: Prominence is given to the speed units used in the country in which the vehicle will be used.

4.Trip recorder reset button
When the starter switch is turned on, the display shows either the odometer reading, or the trip recorder reading. By pressing the trip recorder reset button briefly, the display will change between trip recorder and odometer modes.

With the trip recorder mode displayed, press and hold the reset button for 2 seconds to reset the trip recorder display to zero.

5. Temperature gauge
This gauge indicates the temperature of the engine coolant. As the engine warms up, the pointer will rise to the mid-point of the gauge, where it should remain while the engine is operating at its normal temperature.

WWW.MANUALS.WS

WWW.MANUALS.WS

If the pointer reaches the RED mark, the coolant is too hot and severe engine damage could result; in which case you should stop the vehicle as soon as safety permits and seek qualified assistance.

6. Digital display

H3370

The panel displays the following:

- Odometer reading (shows the total distance travelled by the vehicle). The word ‘ODO’ is displayed.
- Trip recorder (for recording individual journey distances). The word ‘TRIP’ is displayed instead of ‘ODO’.
- Gear selector position (‘1’, ‘2’, ‘4’, ‘P’, ‘R’, ‘N’, ‘D’).
- The word ‘SPORT’ confirms the selection of Sport mode.
- Manual mode gear selection information (‘1’, ‘2’, ‘3’, ‘4’ or ‘5’).

For further information concerning the automatic transmission, (see *“CommandShift™ TRANSMISSION’, page 103’).*

WWW.MANUALS.WS

WWW.MANUALS.WS

Instrument illumination control

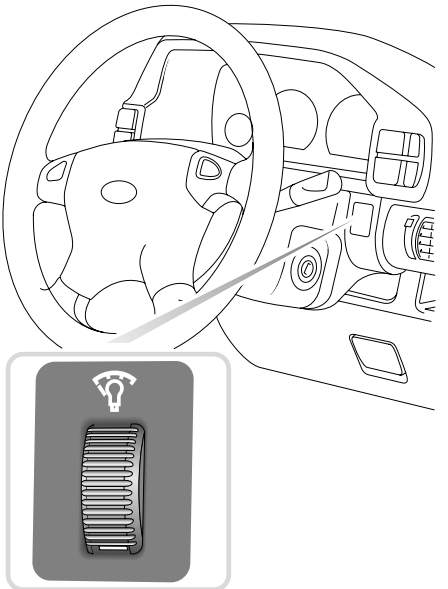

H4019

Rotate the control up to increase, or down to reduce, the intensity of instrument panel illumination.

The instrument illumination control also adjusts illumination of all switch lighting sources forward of the driver.

WWW.MANUALS.WS

WWW.MANUALS.WS

INSTRUMENT PANEL

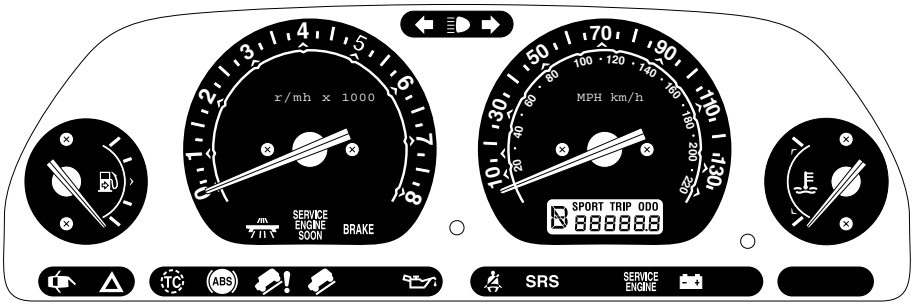

H4775

IMPORTANT INFORMATION
RED warning lights are of particular importance, their illumination indicates that a fault exists. If a RED warning light illuminates, stop the vehicle and review the specific instructions given in this section.

Direction indicators - GREEN

The left or right warning light flashes in time with the relevant direction indicator when they are operated. If either warning light fails to flash or flashes rapidly, the selected direction indicator light is not operating.

NOTE: *If the hazard warning lights are operated, both direction indicator warning lights will flash together.*

Headlight high beam - BLUE

Illuminates when the headlights are switched to high beam.

Cruise control - AMBER

Illuminates when the cruise control master switch is turned on and cruise control is active, and extinguishes when the switch is turned off or if cruise control is deactivated.

Service engine soon- AMBER

Illuminates as a bulb check when the starter switch is turned to position ‘II’ and extinguishes when the engine is started. If the light illuminates while the engine is running, this indicates the detection of an emissions fault by the engine management system.

If the light illuminates and the vehicle drives normally:

- Contact a retailer to arrange a service appointment at your earliest convenience - you may still drive the vehicle.

If the light flashes and/or the vehicle does not drive normally:

- Avoid high speeds and seek immediate assistance from your retailer.

WWW.MANUALS.WS

WWW.MANUALS.WS

Parking brake & brake system - RED

The light illuminates when the parking brake is applied and extinguishes when it is fully released. If the light continues to illuminate after the handbrake is released, a fault with the braking system is indicated; check the brake fluid level (see *'BRAKE FLUID', page 160*). If the light continues to illuminate after this, seek qualified assistance urgently.

Door open - RED

Illuminates when any of the doors (including the taildoor and hood) are not fully closed. DO NOT drive the vehicle with the light illuminated.

Hazard warning lights - RED

Illuminates in conjunction with the direction indicator warning lights, when the hazard warning lights are operating.

Traction control - AMBER

Illuminates as a bulb and system check when the starter switch is turned to position 'II' and extinguishes after 4 seconds approx. The light illuminates for a minimum of 2 seconds, when traction control is operating.

If the light illuminates continuously while traction control is NOT operating, a fault with the system is indicated; seek qualified assistance.

The light also has an overheat function: if traction control is required, but the brakes are too hot, the light will flash for the period when traction control is required and traction has been lost.

ABS - AMBER

Illuminates for approximately 1 second as a bulb and system check when the starter switch is turned to position 'II', and then extinguishes. If the light does not extinguish, a fault has occured with the ABS system and you should consult your Land Rover retailer at the earliest opportunity.

If the light remains on or subsequently illuminates while driving, a fault has been detected by the self-monitoring system. This means that full ABS control may not be available and you should consult your retailer at the earliest opportunity.

Hill descent control (HDC) 'failure' - AMBER

The light illuminates briefly as a bulb check when the starter switch is turned to position 'II'. The light will flash if the brakes become in danger of overheating and continue flashing until the brakes have cooled sufficiently to enable HDC to operate again (see also *'HDC fade-out', page 109*).

If the light illuminates at any other time, a fault in the system is indicated. If this occurs, deselect HDC and consult your Land Rover retailer.

WWW.MANUALS.WS

WWW.MANUALS.WS

Hill descent control (HDC) 'information' - GREEN

Illuminates briefly as a bulb check when the starter switch is turned to position 'II' and will illuminate when HDC is selected.

If HDC is selected when either of the operating gears is engaged (1st or reverse), the light will illuminate continuously.

When HDC is selected and a non-operating gear position is engaged, the light will flash to inform the driver that HDC is selected, but not operating (see also *'HDC fade-out', page 109*).

Low oil pressure - RED

Illuminates as a bulb check when the starter switch is turned to position 'II' and extinguishes when the engine is started. If the light remains on, flashes on and off or illuminates continuously when driving, serious engine damage could occur; stop the vehicle as soon as safety permits and SWITCH OFF THE ENGINE IMMEDIATELY. Seek qualified assistance before driving.

Seat belt - RED*

The light illuminates when the starter switch is turned to position 'II' as a reminder to the driver to ensure that all occupied seat belts are securely fastened. The light extinguishes after approximately five seconds, or when the driver's seat belt is fastened.

Airbag SRS - RED

The light illuminates when the starter switch is turned to position 'II' and extinguishes after about five seconds. If the light illuminates at any other time, seek qualified assistance urgently.

Service engine - AMBER

Illuminates briefly when the starter switch is turned to position 'II'. If it remains on, or illuminates at any other time, the engine management system requires attention. Stop the vehicle as soon as safety permits and switch off the engine for at least 30 seconds; if the light illuminates again after the engine is restarted, it is permissible to continue driving (with reduced engine power), but qualified assistance must be sought as soon as possible, to prevent potential engine damage.

Battery charging - RED

The light illuminates as a bulb check when the starter switch is turned to position 'II' and extinguishes as soon as the engine is running. If it remains on, or illuminates when driving, a fault with the battery charging system is indicated. Seek qualified assistance urgently.

WWW.MANUALS.WS

WWW.MANUALS.WS

AUDIBLE WARNINGS

Lights on reminder

If the lights are left on after the starter switch is turned off, a warning chime will sound when the driver's door is opened. The chime will cease as soon as the lights are switched off or when the driver's door is closed.

Starter key reminder

If the key is left in the starter switch while the driver's door is open, a warning will chime continuously. The chime stops as soon as the door is closed, or the key is removed from the starter switch.

WWW.MANUALS.WS

WWW.MANUALS.WS

DIRECTION INDICATORS

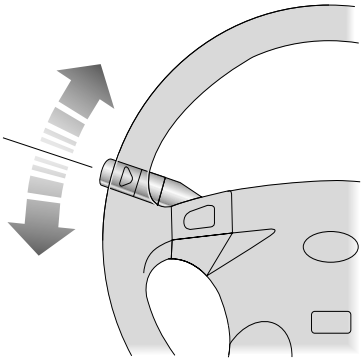

H3340

Move the lever DOWN to indicate a LEFT turn, and UP to indicate a RIGHT turn (the appropriate GREEN warning light on the instrument panel will flash in time with the direction indicators).

Hold the lever part-way up or down against spring pressure to indicate a lane change.

LIGHTS

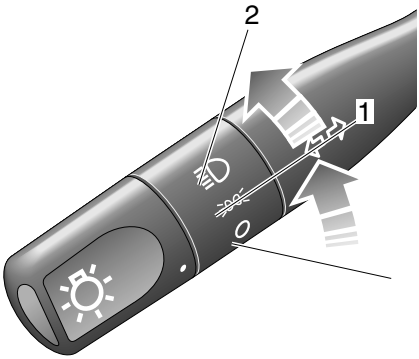

H3341

The side, tail and headlights operate with the starter switch in any position.

If the exterior lights are left on after the starter switch is turned off, a warning chime will sound as soon as the driver's door is opened. The chime will cease as soon as the lights are switched off, or the door is closed.

Side, tail and instrument panel lights
Turn lighting switch to position 1.

Headlights
Turn lighting switch to position 2.

WWW.MANUALS.WS

WWW.MANUALS.WS

Headlight high and dipped beams

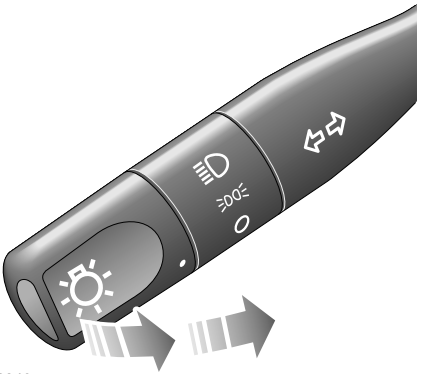

H3342

Pull the lever fully towards the steering wheel to change headlight beams (BLUE warning light glows when the headlights are on high beam).

To flash the headlights, pull the lever part way towards the steering wheel and release.

HAZARD WARNING LIGHTS

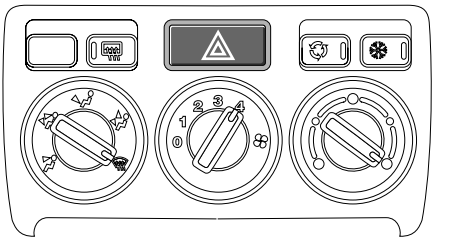

H3344

Press to operate; all the direction indicator lights (including those fitted to a trailer) will flash together. Use ONLY in an emergency to warn other road users when your stationary vehicle is causing an obstruction, or is in a hazardous situation. Remember to switch off before moving away.

WWW.MANUALS.WS

WWW.MANUALS.WS

OPERATING

The wipers and washers will only operate when the starter switch is turned to position ‘I’ or ‘II’.

IMPORTANT
• DO NOT operate the wipers on a dry windshield. • To prevent possible overload damage to the wiper motor, in freezing or very hot conditions ensure that the blades are not frozen or stuck to the glass before operating the wipers. • In winter, remove any snow or ice from around the arms and blades, including the wiped area of the windshield and the heater air intakes.

NOTE: *If the wiper blades have stuck to the glass, a thermal cut-out may temporarily prevent the wiper motor from operating. If this is the case, switch the wipers off, free the blades from the obstruction and then switch on again.*

WINDSHIELD WIPERS

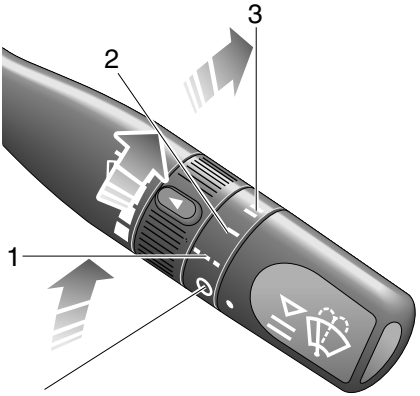

H3345

Intermittent wipe
Turn switch to position 1.

Normal speed wipe
Turn switch to position 2.

Fast speed wipe
Turn switch to position 3.

NOTE: *If the front windshield wipers are operating (in either intermittent or continuous mode), the rear wiper operates automatically whenever reverse gear is selected.*

WWW.MANUALS.WS

WWW.MANUALS.WS

Single wipe

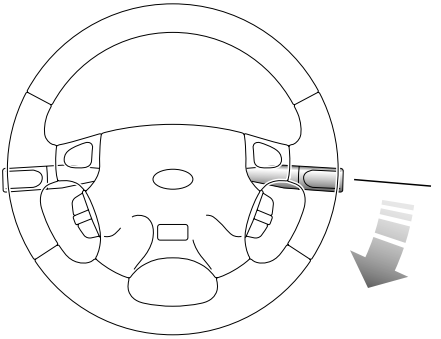

H3520

Pull the lever down and release immediately.

NOTE: *With the lever held down, the wipers will operate at high speed until the lever is released.*

Variable delay (intermittent wipe)

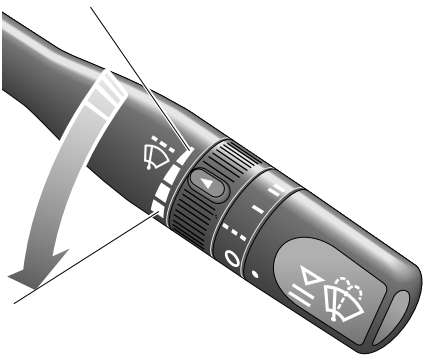

H3346

Rotate the inner switch to vary the delay between wipes.

WINDSHIELD WASHERS

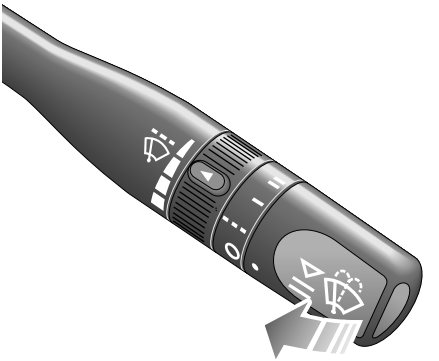

H3347

Pull the lever toward the steering wheel. The windshield wipers will operate in conjunction with the washers for as long as the lever is held in this position, the wipers continuing for a further 3 to 4 wipes after the lever is released.

WARNING

If you operate your vehicle in temperatures below 40 degrees F, use washer fluid with anti-freeze protection. In cold weather, failure to use washer fluid with anti-freeze protection could result in impaired windshield vision and increase the risk of a vehicle crash.

NOTE: *State or local regulations may restrict the use of volatile organic compounds (VOC's), which are commonly used as anti-freeze agents in washer fluid. A washer fluid with limited VOC content should be used only if it provides adequate freeze resistance for all regions and climates in which the vehicle will be operated.*

For more information on Wipers and Washers, see *'WINDSCREEN WASHER TOP-UP', page 181* & *'HEADLIGHT WASHERS', page 181*

WWW.MANUALS.WS

WWW.MANUALS.WS

REAR WINDSHIELD WIPER AND WASHER

Rear windshield wash/wipe

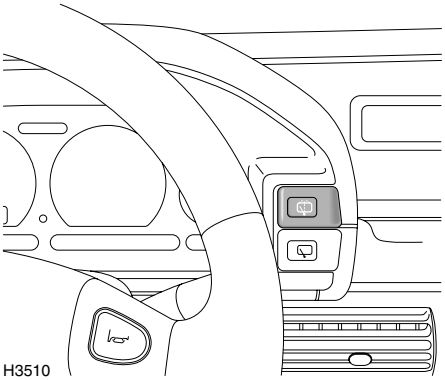

Press and hold the switch for the required duration of windshield washing. The wiper operates automatically during washing and continues for a further 4 wipes (approx.) after the switch is released.

Rear windshield wiper

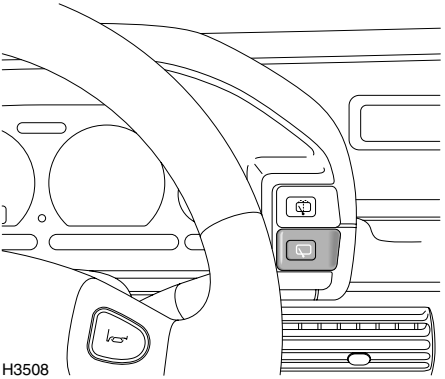

Press to operate: after continuously wiping 3 or 4 times, the wiper operates intermittently (approx. once every 6 seconds) until switched off.

NOTE: *When reverse gear is selected, the rear wiper will operate continuously in tandem with the front wipers.*

NOTE: *Opening the taildoor, or lowering the rear windshield, will switch the rear wiper off.*

WWW.MANUALS.WS

WWW.MANUALS.WS

HORN

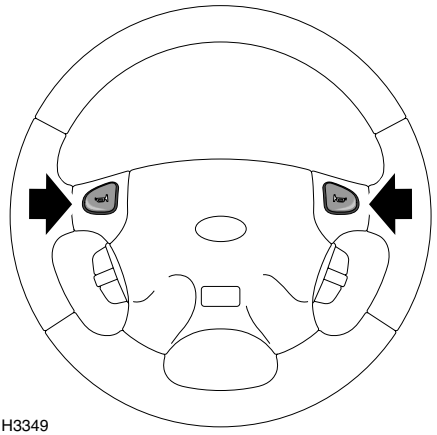

To operate, press either of the horn switches set into the steering wheel pad.

WWW.MANUALS.WS

WWW.MANUALS.WS

EXTERIOR MIRRORS

NOTE: *The right hand mirror glass is convex, providing a wider field of vision. As a result, objects reflected in this mirror are closer than they appear.*

Adjustment

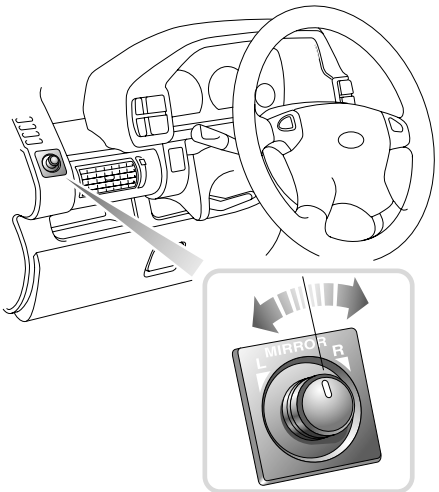

H3363

- Turn the control to the **'L'** or **'R'** position to select either the left or right hand mirror.
- With the starter switch turned to position 'II', push the control in the appropriate direction to tilt the mirror glass up/down/left or right.
- When adjustment is complete, return the control to the OFF position (midway between 'L' and 'R').

Heating elements

The exterior mirrors have integral heating elements for dispersing ice and mist, which operate automatically whenever the starter switch is in position 'II'.

Folding the mirror body

The body of each door mirror is designed to fold forwards or rearwards on impact. They can also be folded back manually towards the side windows into a 'park' position, to enable the vehicle to negotiate narrow openings.

WWW.MANUALS.WS

WWW.MANUALS.WS

INTERIOR MIRROR

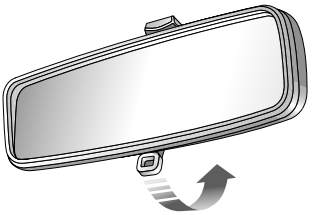

H2319

The interior mirror can be dipped to reduce glare from following vehicles. In the event of excessive glare, move the lever at the base of the mirror forward to 'dip' the mirror. Normal visibility is restored by pulling the lever back to its original position.

NOTE: *In some circumstances, the view reflected in a 'dipped' mirror can confuse the driver as to the precise position of following vehicles. Remember to take additional care!*

VANITY MIRROR*

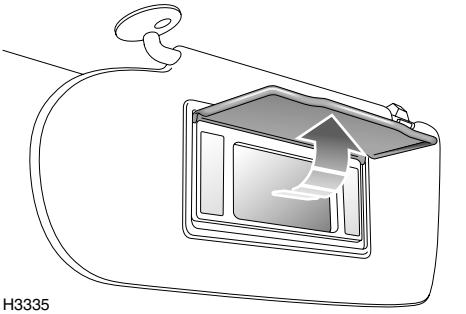

H3335

To use the vanity mirror, pull down the passenger's sun visor. On some models, the vanity mirror is illuminated; lift the cover to illuminate the mirror.

NOTE: *Always close the cover, or on vanity mirrors not fitted with a cover, always return the visor to its stowed position when not in use, to avoid possible scorching of the seats by the sun reflected in the mirror.*

WWW.MANUALS.WS

WWW.MANUALS.WS

ELECTRIC WINDOW CONTROLS

WARNING

Accidental closure of an electrically operated window on fingers, hands or any vulnerable part of the body, can result in serious personal injury. Always observe the following precautions:

- ***ENSURE that passengers are kept clear while the windows are being operated and that the windows are not obstructed when opening or closing.***
- ***ENSURE that all adult passengers are familiar with the controls and the potential dangers of operating electric windows.***
- ***DO NOT allow passengers to extend any part of their bodies through the windows while the vehicle is moving.***
- ***NEVER leave children alone in the vehicle as this could result in injury or even death.***

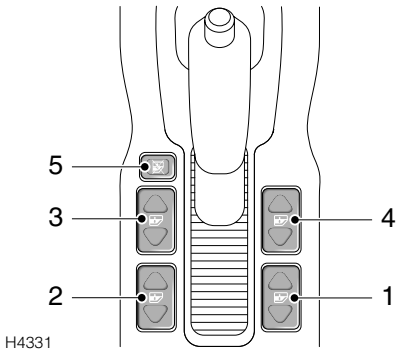

The switches on the center console operate the windows as follows:

1. Right-hand rear window.
2. Left-hand rear window.
3. Left-hand front window.
4. Right-hand front window.
5. Isolation switch for rear door windows.

NOTE: *Electric rear windows can also be operated by the individual switches mounted on each rear door, provided that the isolation switch has not been activated.*

Window operation

The electric windows can be operated when the starter switch is at position 'II' and for up to 45 seconds after the starter switch is turned off (provided neither front door is opened in the meantime).

Press and hold the bottom half of a switch to lower and the upper half to raise. The window will stop moving when the switch is released.

ALWAYS close the windows when the vehicle is unattended.

Rear window isolation switch

Press once to isolate the rear window switches (indicator light in the switch illuminates); press a second time to restore independent control.

WARNING

ALWAYS isolate the rear window switches when carrying children.

'One touch' down (Driver's door only)

By briefly pressing (and then releasing) the bottom half of the switch, the window will open fully at a single touch. Window movement can be stopped at any time by briefly pressing the upper half of the switch.

WWW.MANUALS.WS

WWW.MANUALS.WS

ELECTRIC TAILDOOR GLASS

NOTE: *Long loads should be carried on the roof rack. If it is necessary to carry a load that protrudes through the taildoor window, the weight of the load must NOT rest on the glass of a partially open window. Damage to the glass or window mechanism may occur (see also 'Accommodating long loads', page 38).*
'Accommodating long loads', page 38

The taildoor glass can be lowered from outside the vehicle, to enable easy access to the loadspace area when it is impossible or inconvenient to open the taildoor.

Raising and lowering

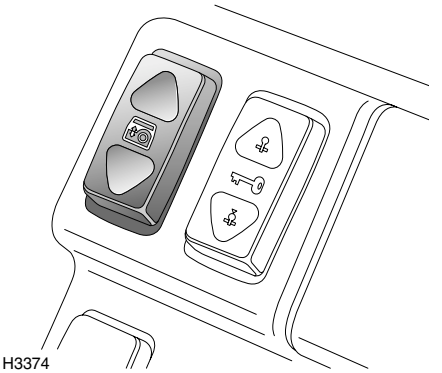
H3374

From inside the vehicle:
With the starter switch in position 'II', press and hold the bottom half of the switch to lower the glass. Movement will stop when the switch is released.

Press the upper half of the switch to raise the glass. If the switch is released before the glass is fully raised it will automatically lower again.

One touch down:
By briefly pressing (and then releasing) the bottom half of the switch, the taildoor glass will open fully at a single touch.

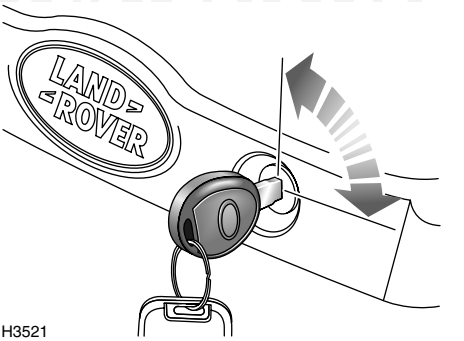

H3521

From outside the vehicle:
Press and hold the UNLOCK button on the remote handset (hold for 2 seconds) - the taildoor glass will fully lower.

To raise the glass, insert the key into the switch mounted in the taildoor and turn clockwise. If the switch is released before the glass is fully raised it will automatically lower again.

NOTE: *If the vehicle is locked when the glass is lowered using the handset, the driver's door will unlock and vehicle security will be disabled. In this case, remember to relock the vehicle.*

Battery disconnection
If the battery has been disconnected, the taildoor glass will need to be recalibrated. If the alarm was armed when the battery was disconnected (or discharged), disarm the alarm after reconnection - the glass will fully lower (this will happen automatically if the alarm was in a disarmed state when the battery was disconnected).

After battery reconnection, fully raise the glass - the taildoor glass is now recalibrated (if the glass is not fully raised, an error 'beep' will sound).

WWW.MANUALS.WS

WWW.MANUALS.WS

ELECTRIC SUNROOF*

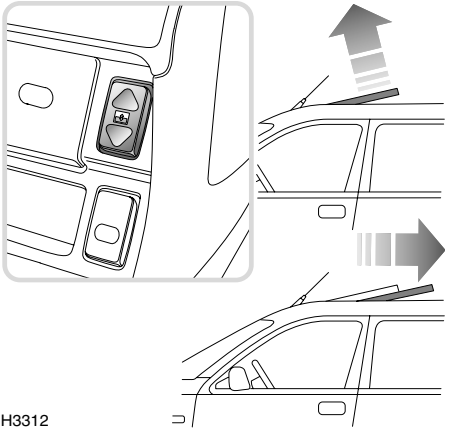

H3312

The sunroof can be operated when the starter switch is turned to position 'II' and for up to 45 seconds after the starter switch is turned off (provided neither front door is opened in the meantime).

The roof opens in two separate phases as follows:

- ***To tilt the roof:*** Press the bottom half of the switch - the rear edge of the roof rises to the tilted position.
- ***To open the roof:*** With the sunroof fully tilted, press the bottom half of the switch - the roof remains tilted and slides towards the rear until fully open or the switch is released.

To close the roof: press the upper half of the switch - the sunroof will first close to the tilted position, then it will return the tilted roof to the fully closed position. The sunroof can be stopped (at any position) by releasing the switch.

WARNING

Accidental closure of a sunroof on fingers, hands or any vulnerable part of the body, can result in serious personal injury. Always observe the following precautions:

- ***ENSURE that passengers are kept clear when operating the sunroof and that the sunroof is not obstructed when opening or closing.***
- ***ENSURE that all adult passengers are familiar with the controls and the potential dangers of operating an electrically operated sunroof.***
- ***DO NOT allow passengers to extend any part of their bodies through the sunroof aperture while the vehicle is moving.***
- ***NEVER leave children alone in the vehicle as this could result in injury or even death.***
- ***Do not open the sunroof if the load on the roof rack will impede its operation.***

CAUTION: Do not operate the sunroof in freezing conditions, or when the roof panel is covered in ice or snow.

Sunroof visor

The sunroof visor must be opened and closed manually.

WWW.MANUALS.WS

WWW.MANUALS.WS

TARGA ROOF

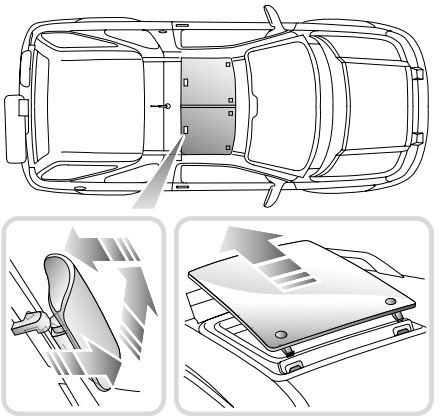

H3313

The targa roof is made up of twin glass or composite panels set into the roof. Either or both of which can be tilted open or removed.

Tilting a panel (see left inset)

1. Pull the handle forward to unlock.
2. Push the handle up.
3. Push the handle to the rear until it ‘clicks’ into the lock position.

To close the panel, reverse the above procedure.

Removing a panel

WARNING

DO NOT attempt to remove the targa roof panels when the vehicle is moving!

Half tilt the panel (as in 1 and 2 above), then press the red catch to detach the handle linkage. From outside the vehicle, raise the rear of the panel until the two front hinges disengage and lift the panel off.

NOTE: *Handle glass with care, avoid damage to the surfaces, especially along the edges.*

WARNING

DO NOT allow passengers to extend any part of their bodies through roof apertures while the vehicle is moving - injury from flying debris, branches of trees or other obstructions could occur.

Storing the panels

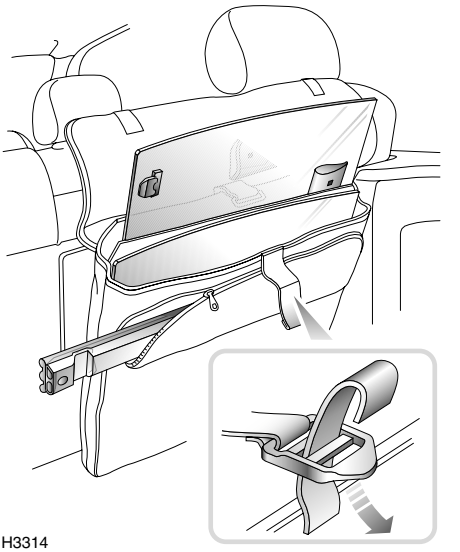

H3314

After removal, always protect the panels by placing them sideways in the stowage case attached to the rear seats in the luggage compartment as shown.

WARNING

DO NOT drive with the roof panels loose in the vehicle, they could become dangerous projectiles in the event of an accident or emergency maneuver.

WWW.MANUALS.WS

WWW.MANUALS.WS

Refitting a panel

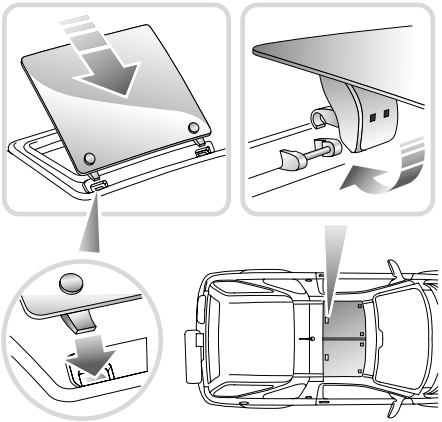

H3315

Before refitting, note that the panels are not interchangeable because the curvature at each side of the roof is more pronounced than in the center. To ensure accurate refitting, the one rounded corner of the panel should be positioned at the front OUTSIDE corner.

1. Locate the hinges over the top of and through the slots in the wind deflector into their appropriate slots at the front of the roof.
2. Lower the roof and, ensuring that the handle linkage is the correct way up, push the handle rearwards as if to lock.
3. The handle should now be engaged - ensure that the red button is fully retracted, then attempt to open (tilt) the roof to check.

NOTE: *ALWAYS close and secure the roof when the vehicle is to be left unattended.*

Removing the 'T-bar'

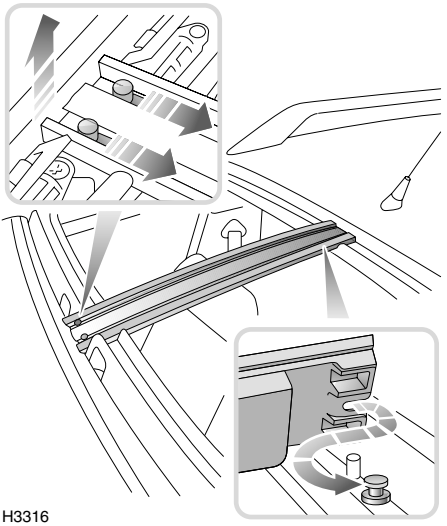

H3316

With both panels removed, the 'T-bar' can also be removed:

- Press the RED catches rearwards (as arrowed), then pull the bar upwards and then forwards to remove.

NOTE: *The 'T-bar' can be stowed in the pocket provided in the stowage bag in the luggage compartment (see 'Storing the panels', page 74)*

When replacing, ensure that the 'T-bar' is secured at the rear, before pushing downwards to engage the front (RED) locking catches.

WWW.MANUALS.WS

WWW.MANUALS.WS

VENTILATION

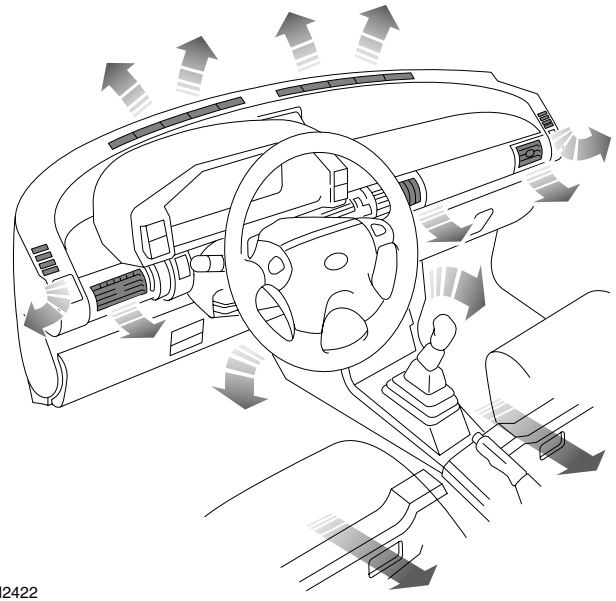

H2422

The ventilation system provides fresh or heated air to the interior of the vehicle from the air intake grille in front of the windshield.

NOTE: *Always keep the air intake grille clear of obstructions such as leaves, snow or ice.*

Air outlets are provided to the windshield, face and feet - the location of the vents is shown in the illustration above. The temperature of the air is controlled by the heater.

Information concerning the operation of the heating and ventilation system, as well as the air conditioning, appears on the pages that follow.

WWW.MANUALS.WS

WWW.MANUALS.WS

HEATER CONTROLS

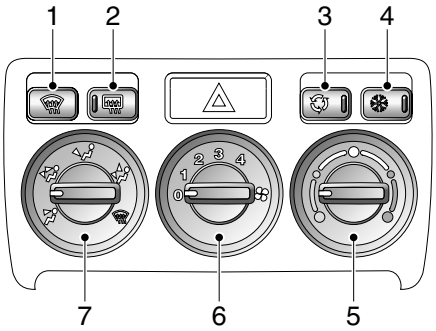

H3317A

1. Heated front windshield
Press to operate; the indicator light in the switch illuminates whenever the heater is on and extinguishes when the heater is turned off.

NOTE: *The front windshield heater will operate only when the engine is running and will switch off automatically after approximately 10 minutes.*

2. Rear windshield demister
Press to operate; the indicator light in the switch illuminates whenever the demister is on and extinguishes when the demister is turned off.

NOTE: *The rear windshield demister will operate only with the taildoor fully closed and when the engine is running and will switch off automatically after approximately 15 minutes.*

NOTE: *DO NOT stick labels over the heating elements, and DO NOT scrape or use abrasive materials to clean the inside of the window.*

3. Air recirculation button
Press to recirculate air inside the vehicle (indicator light illuminates).

The air recirculation mode prevents the heating system from taking in fresh air from outside the vehicle. Instead, the air already inside the vehicle is recirculated, thus preventing the entry of traffic fumes. In cold weather air recirculation also enables warmer air to be used to defrost the windshield when the engine is still cold.

WARNING

The air recirculation mode can cause the windshield to mist. If this happens, switch off air recirculation immediately.

4. Air conditioning
With the engine running, press to operate. The indicator light in the switch illuminates when the air conditioning is switched on.

5. Air temperature control
Rotate the control clockwise (towards the RED segments) to increase the air temperature, or anti-clockwise (towards the BLUE) to reduce the temperature.

6. Air blower control
Turn the control clockwise to progressively increase the blower speed.

NOTE: *With the control in position 'O', the volume of air entering the vehicle is dependent on driving speed alone.*

WWW.MANUALS.WS

WWW.MANUALS.WS

7. Air distribution control
Rotate to select air distribution:

Air to face vents
(to ensure best performance, the face level vents must be fully open)

Air to face vents and foot outlets
(to ensure best performance, the face level vents must be fully open)

Air to foot outlets

Air to foot outlets and windshield
(if the ambient temperature is approximately 41º F (5º C) or higher, the air conditioning will automatically dehumidify the air to reduce misting).

All air to windshield
(if the ambient temperature is approximately 41º F (5º C) or higher, the air conditioning will automatically dehumidify the air to reduce misting).

USING YOUR HEATER

Fresh air enters the heater unit through the grille in front of the windshield and stale air is drawn out through vents in the rear of the vehicle. Ducts beneath the front seats provide heating for rear seat passengers - these must not be obstructed.

The following examples of basic heater settings are intended as a general guide; the air distribution, temperature and blower controls can then be further adjusted to suit your comfort requirements.

Always remember that full heating is not available until the engine has reached its normal operating temperature.

Maximum heating

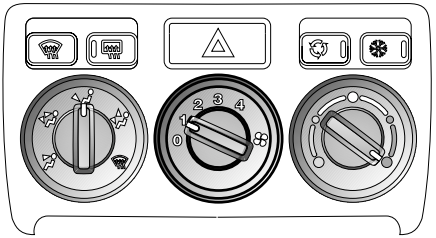

H3318A

Set the controls as shown, with the blower at the slowest speed (position 1) until the temperature gauge indicates that the engine is warming up - the blower speed can then be increased.

Demisting

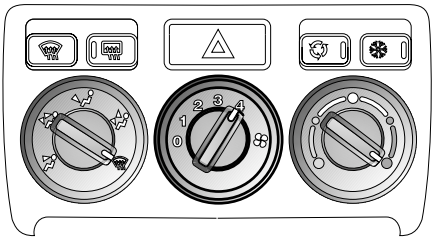

H3319A

Set the controls as shown, to obtain the maximum flow of heated air from the windshield and side window vents.

Opening a window may improve ventilation.

WWW.MANUALS.WS

WWW.MANUALS.WS

Defrosting

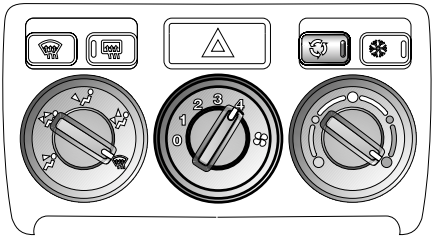

H3320A

Set the controls as shown and switch on air recirculation to prevent cold air from being drawn into the vehicle. Turn air recirculation off as soon as the windshield is clear, to prevent any possibility of the windshield misting.

Maximum ventilation

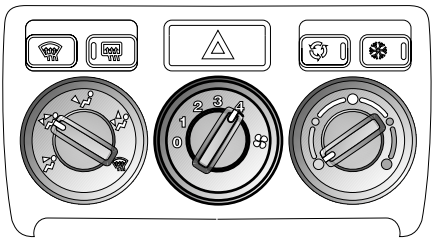

H3321A

Set the controls as shown, with the face level vents open.

Adjust the blower speed as required.

FACE LEVEL VENTS

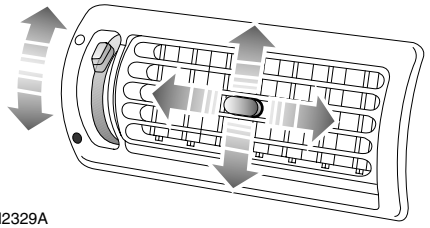

H2329A

Rotate the thumbwheel down to open or up to close the vents. Direct the air flow by moving the control in the center of the louvres up or down, or from side to side.

To increase output from the center face vents, shut the outer vents.

When carrying rear seat passengers, use the outer vents for the front seat occupants and use the more powerful center vents for the rear seat passengers.

WARNING

Driving with the taildoor or taildoor window open is not recommended because poisonous exhaust fumes will be drawn into the vehicle (see 'Accommodating long loads', page 38 for advice).

WWW.MANUALS.WS

WWW.MANUALS.WS

AIR CONDITIONING

The air conditioner provides additional cooling and also reduces humidity. This can be used to demist windows quickly in damp weather and, when used in conjunction with the heater, makes the interior of the vehicle warm and dry.

NOTE: *In high humidity conditions, slight windshield misting may be experienced when the air conditioning is turned on. This is a natural occurrence for most automotive air conditioning systems; it is not a fault with the system and will clear after a few seconds, once the air conditioning is operating.*

Using the air conditioning

The air conditioning can only be used when the engine is running. For the air conditioning system to operate efficiently, all windows (and the sunroof) should be closed, and the air intake vents free from ice, snow, leaves and other debris.

With the engine running, press the 'A/C' button, and adjust the air distribution, air temperature and blower controls as required.

NOTE: *The air conditioner will only operate when the blower is switched on.*

Operation of the air conditioning system places an extra load on the engine. In very hot conditions or when the engine is required to work unusually hard (climbing long hills or driving in congested traffic, for example), this could result in high engine temperatures. If the pointer nears the RED zone of the temperature gauge, temporarily turn the air conditioning off until engine temperatures return to normal.

NOTE: *Under extreme conditions, the air conditioning may automatically switch off, to prevent damage to the engine.*

Rapid cooling:

With the engine running press the 'A/C' button, turn the air temperature control to the BLUE segment, select air recirculation and turn the blower switch to 4. Turn off air recirculation and adjust the blower when the vehicle interior is cool.

NOTE: *In very hot conditions, it may be advisable to fully ventilate the vehicle by opening the windows and sunroof for a while before closing them again and operating the air conditioning.*

Maintaining the air conditioning

The air conditioning system is sealed and major maintenance should only be carried out by a qualified technician. To maintain the system in peak condition, owners should ensure that the system is operated for a short period every week (even during the cold winter months); with the engine at its normal operating temperature, run the air conditioning for at least ten minutes whilst driving at a steady speed.

Surplus water produced by the dehumidifying process is expelled from the system via drain tubes beneath the vehicle. This may result in a small pool of water forming on the road when the vehicle is stationary and is not a cause for concern.

WWW.MANUALS.WS

WWW.MANUALS.WS

HEATED FRONT SEATS*

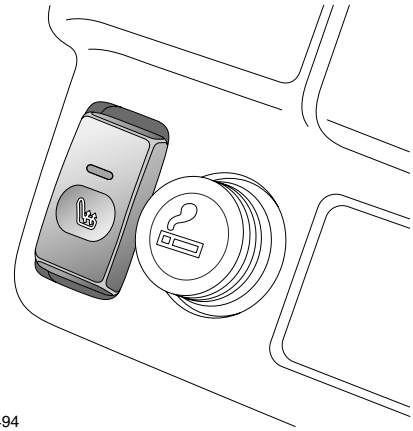

H3494

With the starter switch turned on and the engine running, press the switches to operate the heating elements in either the driver's or front passenger seat (the indicator light in the switch illuminates). Press a second time to switch off.

NOTE: *The seat heaters will switch off automatically 15 seconds after the starter switch is turned off.*

The seat heaters are thermostatically controlled and operate intermittently to achieve and then maintain a predetermined temperature between 79° F and 97° F (26° C and 36° C).

NOTE: *Owners should be aware that the seat heaters consume considerable power from the battery and for this reason, it is recommended that they are operated only with the engine running.*

WWW.MANUALS.WS

WWW.MANUALS.WS

COURTESY & MAP READING LIGHTS

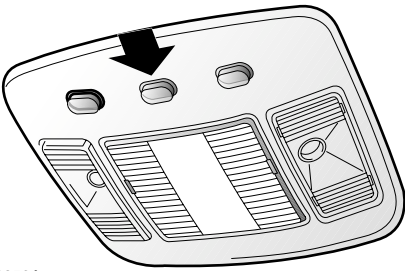

H2352A

Front courtesy and map reading lights

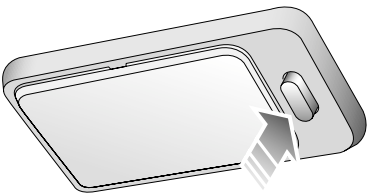

H2593

Rear courtesy light

Press the appropriate switch to illuminate (or extinguish) the lights manually.

The front and rear lights illuminate automatically when the vehicle is unlocked or whenever a door or taildoor is opened, and extinguish approximately 15 seconds after ALL the doors are closed, or as soon as the starter switch is turned on.

If a door or the taildoor remains open for ten minutes or more, a 'time out' function will extinguish the courtesy lights in order to prevent the battery from discharging.

NOTE: *If the map reading lights or rear courtesy light are left on after being manually selected, they will NOT extinguish automatically.*

The courtesy lights will extinguish when the vehicle is locked.

LUGGAGE COMPARTMENT LIGHT

Illuminates automatically when the taildoor is opened.

CLOCK

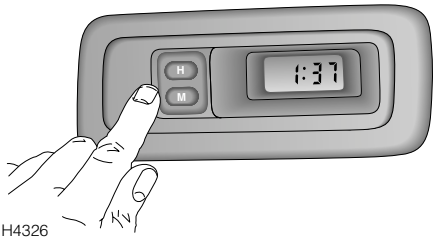

H4326

The digital clock display illuminates when the starter switch is turned on and dims for night viewing when the sidelights are switched on.

With the starter switch turned to position 'I', depress the hour ('H') and minute ('M') buttons to set the time. If both buttons are pressed together, the display will change between 24 hour and 12 hour displays.

NOTE: *If the battery is disconnected, the clock will need to be reset.*

WWW.MANUALS.WS

WWW.MANUALS.WS

GLOVEBOX

WARNING

DO NOT drive with the glovebox open. An open glovebox could cause injury to the front seat passenger in the event of a collision.

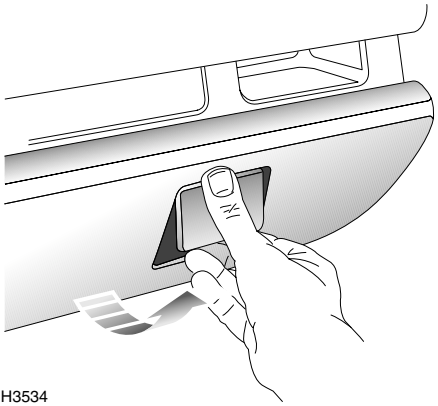

H3534

Lift the handle to open the glovebox.

The left hand compartment in the glovebox can be used to store CD cases.

Glovebox light
Operates automatically when the exterior lights are switched on and the passenger glovebox is opened.

DRIVER'S STORAGE AREA

WARNING

DO NOT drive with the storage area open. The storage area lid could cause serious injury in the event of a collision.

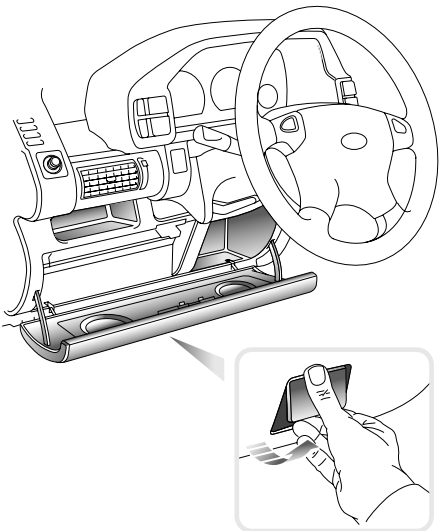

H3365

Lift the handle to open the driver's storage area - only when the vehicle is stationary.

The left hand compartment in the storage area can be used to store tape and CD cases.

WWW.MANUALS.WS

WWW.MANUALS.WS

PASSENGERS' STORAGE

Rear seat passengers can store items in the pockets in the rear of the front seats and in overhead nets provided in 5-door vehicles.

WARNING

Do not use the overhead nets to hold anything other than light items such as maps or sunglasses. Anything heavier than this could be thrown about in the passenger compartment and possibly injure occupants in the event of an accident or emergency maneuver

DRINKS STOWAGE

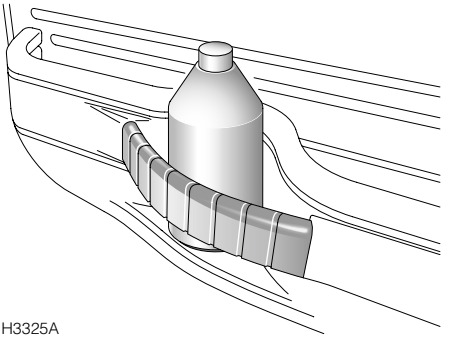

H3325A

The expanding strap fitted to the front door stowage compartments can be used to store drink containers securely when driving.

NOTE: *Drink containers over 0.5 liter capacity will not be properly secured by the strap.*

WARNING

Do not use the strap to store hot drinks.

WWW.MANUALS.WS

WWW.MANUALS.WS

CUP HOLDERS

WARNING

The driver should not drink and should not use the cup holder while driving.

Retractable cup holders should be kept closed when not in use.

DO NOT place anything other than suitable drink containers in the cup holders, because such items may be thrown about in the passenger compartment and possibly injure occupants in the event of an accident or emergency maneuver.

DO NOT carry open-top drink containers in the cup holders while the vehicle is in motion; a spilled hot drink could cause personal injury. Spilled drinks can also damage upholstery, carpeting and electrical components.

Use only for soft containers. DO NOT use to hold cups made of glass, china or hard plastic, as these may cause injury in the event of an accident or emergency maneuver. Unopened sealed containers (drinks cans, for example) are hard objects and may also cause injury.

Front cup holders

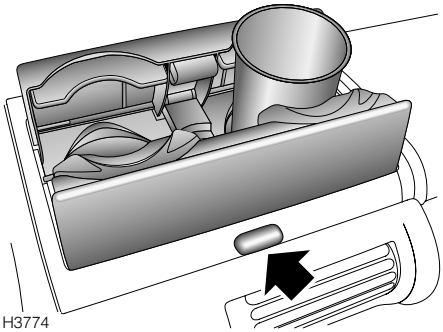

Press the button (arrowed) to open the cup holder. Push the flap centrally to close. The rubber mats inside the holder can be removed for cleaning.

Rear cup holders

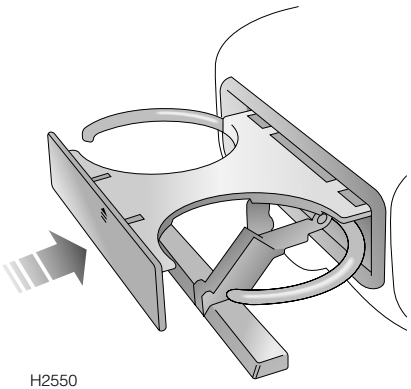

With the center armrest lowered, press the front of the cup holder to open. The retaining arms can be adjusted to suit a range of container sizes. Press the front of the cup holder again to close.

WWW.MANUALS.WS

WWW.MANUALS.WS

SUN VISOR

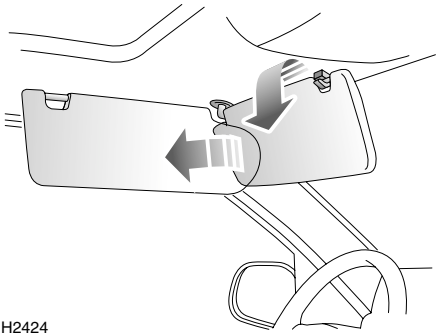

To shield your eyes from the sun, pull the visor down from the roof; the visor can be used to shield the upper part of the windshield or the side window as required.

NOTE: *On some models, the underside of the sun visors are fitted with a vanity mirror with its own illumination.*

ASHTRAY

WARNING

DO NOT use the ashtray for disposing of waste paper or other combustible items.

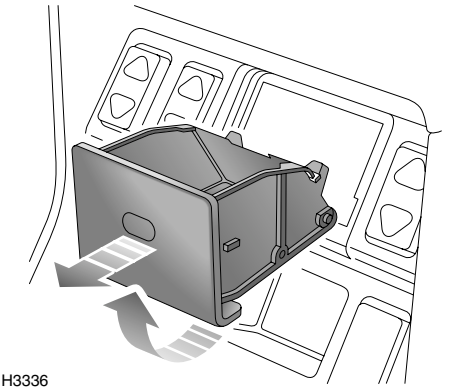

Front ashtray illustrated

Push to access the front or rear ashtray. To remove for emptying; with the ashtray open, carefully pivot the ashtray upwards and withdraw it from the aperture.

To refit the ashtray, partially insert the tray into the aperture, then pivot downwards before pushing the ashtray closed.

WWW.MANUALS.WS

WWW.MANUALS.WS

CIGAR LIGHTER

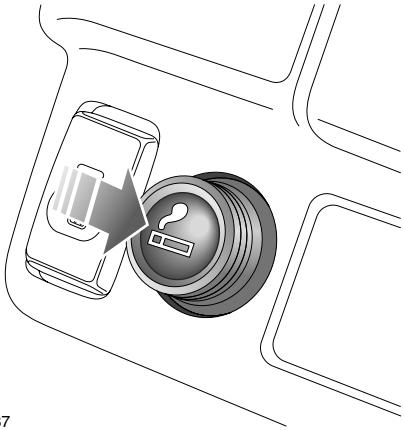

H3337

With the starter switch turned on, press the lighter in to heat up. When it has reached the correct temperature it will partially eject and can then be withdrawn for use.

- ONLY hold the cigar lighter by the handle.
- DO NOT plug accessories into the cigar lighter socket unless they are approved by Land Rover (see *'AUXILIARY POWER SOCKET', page 87* for more information).

NOTE: *On vehicles not fitted with a cigar lighter, the power socket is protected by a blank cover.*

WARNING

Always remove the lighter as a precaution when children are left alone in the vehicle.

AUXILIARY POWER SOCKET

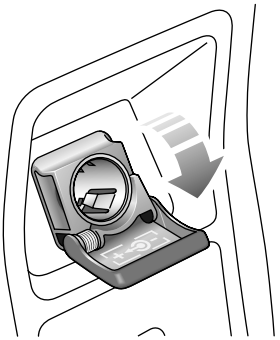

H3327

An auxiliary power socket is mounted in the center console, above the rear ashtray. This can be used to power Land Rover approved accessories that use a maximum of 180 watts.

Always run the engine during prolonged use of electrical accessories, otherwise the battery may become discharged.

CAUTION: NEVER plug non-approved accessories into the power socket - damage to the vehicle's electrical systems could occur.

WWW.MANUALS.WS

WWW.MANUALS.WS

LOADSPACE COVER*

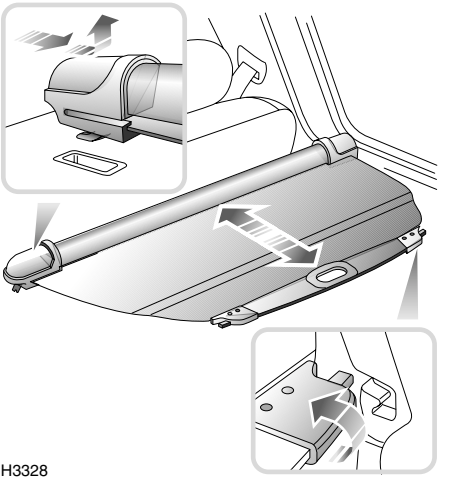

H3328

The rear loadspace can be covered by a spring loaded roller blind, which can be retracted when not in use by detaching the cover from the hooks at the rear of the vehicle (see lower inset).

To remove the loadspace cover:

1. Slide the retracted cover firmly to the right.
2. Lift the left hand end of the cover from its location.
3. Carefully maneuver the cover from the rear of the vehicle.

Refitting the loadspace cover is the reverse of the removal procedure.

NOTE: *Removal of the loadspace cover may be eased by folding the rear seat backrest forward.*

WARNING

DO NOT carry loose items of luggage on top of the loadspace cover - these may obscure vision and could become dangerous projectiles in the event of a sudden stop or collision.

All equipment, luggage or tools carried in the loadspace should be secured to reduce the risk of injury to the driver and passengers in the event of an accident or emergency maneuver.

DO NOT store the loadspace cover loose in the vehicle.

WWW.MANUALS.WS

WWW.MANUALS.WS

IN-CAR TELEPHONES

For your safety, always note the following precautions before fitting or using an in-car telephone, or any mobile communication equipment.

- Only use an installation kit incorporating an aerial external to the vehicle.
- Ensure that the installation is carried out by a competent installer.

WARNING

For your safety and that of others, using any hand-held appliance while driving can be dangerous. Always stop the vehicle before making a call and ensure the telephone is switched off while you are driving.

WWW.MANUALS.WS

WWW.MANUALS.WS

RADIO/CASSETTE PLAYER

NOTE: *Full operating instructions for any audio equipment fitted as standard to your vehicle, are contained in the `In-car Entertainment' book in the literature pack.*

CD autochanger*

The CD autochanger is located under the front right hand seat. Full operating instructions are contained in the *'In-car Entertainment'* book in the car literature pack.

WARNING

DO NOT insert or eject the magazine while driving - this action could result in the driver losing control of the vehicle.

RADIO AERIAL

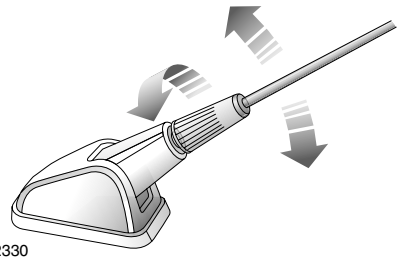

H2330

Your vehicle is equipped with a detachable mast aerial, mounted on the roof.

NOTE: *ALWAYS unscrew and remove the aerial before entering an automatic car wash.*

Aerial height

Always check the available headroom and, if necessary, adjust the angle of the aerial (see illustration) before entering or leaving a garage or car park with insufficient headroom.

NOTE: *The aerial of the navigation system* (if fitted) cannot be adjusted for height.*

REMOTE AUDIO CONTROLS*

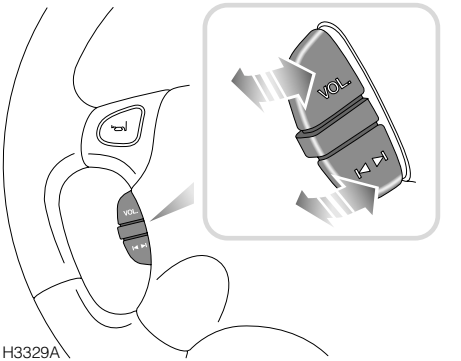

H3329A

Volume control

Lift or press down to increase or decrease volume.

Search control

Lift or press down to search for the next or previous radio station on the selected waveband.

During CD play, lift the control to move forward to the next track, or press down to return to the start of the current track. Operate the control repeatedly to move forward or back through several tracks at a time.

NAVIGATION SYSTEM*

NOTE: *Full operating instructions for the navigation system, if fitted to your vehicle, are contained in the `Audio and Navigation System' book in the literature pack.*

WWW.MANUALS.WS

Driving & Operating

WWW.MANUALS.WS

Starting & Driving

STEERING COLUMN LOCK 93
STARTER SWITCH. 93
STARTING 94
DRIVING 95
FUEL ECONOMY 96
EMISSION CONTROL SYSTEM 97

Fuel System

TYPE OF FUEL 98
GAS STATION SAFETY. 99
FUEL FILLER 99
FUEL FILLING 100
EMPTY FUEL TANK 100
FUEL CUT-OFF SWITCH. 100

Catalytic Converter

CATALYTIC CONVERTER. 101

Automatic Transmission

CommandShift™ TRANSMISSION 103
GEAR SELECTOR LEVER 103
USING AN AUTOMATIC GEARBOX 105
AUTOMATICALLY SELECTED MODES 107

Hill Descent Control

HILL DESCENT CONTROL 108

Cruise Control

CRUISE CONTROL. 110

Brakes

FOOT BRAKE 112
PARKING BRAKE 114
ANTI-LOCK BRAKES 115

Traction Control

ELECTRONIC TRACTION CONTROL. 117

Hardback

REMOVING AND FITTING THE HARDBACK 118

Roof Bars

REMOVING AND FITTING THE ROOF BARS. . . . 121

WWW.MANUALS.WS

WWW.MANUALS.WS

Load Carrying

LUGGAGE ANCHOR POINTS 124
STOWAGE BOX 124
VEHICLE LOADING 125
ROOF RACK 125

Towing

TOW BARS 126
TOWING A TRAILER 126

WWW.MANUALS.WS

WWW.MANUALS.WS

STEERING COLUMN LOCK

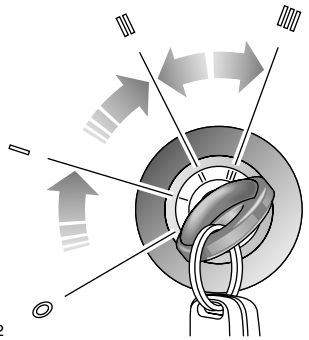

To unlock the steering column
Insert the key FULLY and turn the starter switch to position ‘I’. A small movement of the steering wheel may be necessary to disengage the steering lock while turning the switch.

To lock the steering column
With the gear selector in ‘P’ (Park), turn the key to position ‘0’ and withdraw the key from the starter switch. Turn the steering wheel slightly until the lock engages.

WARNING

To prevent loss of steering control, do not under any circumstances turn the key to the 'O' position while the vehicle is moving. To prevent the steering column lock engaging it is most important that, before the vehicle is moved in any way, the key be inserted in the lock and turned to position 'I'. If, due to an accident or electrical fault, it is not safe to turn the key, disconnect the negative lead of the battery and then turn the key.

STARTER SWITCH

The starter switch is located to the right of the steering column, and uses the following sequence of key positions to operate the steering lock, electrical circuits and starter motor:

Position ‘0’

- Steering locked (if key is removed).
- Most lighting circuits are operational, including: sidelights, headlights and hazard warning lights.
- Gear selector lever locked in ‘P’.

Position ‘I’

- Steering unlocked.
- Clock, radio/cassette player and cigar lighter can now be operated.

Position ‘II’

- All instruments, warning lights and electrical circuits are operational.

Position ‘III’

- Starter motor operates.

  Release the key immediately the engine starts (the key will automatically return to position ‘II’). Note that operation of position ‘I’ electrical functions will be interrupted during engine cranking.

NOTE: *Gear selector position ‘P’ or ‘N’ must be selected before the engine will start.*

NOTE: *Gear selector position ‘P’ must be selected before the key can be removed from the starter switch.*

NOTE: *Immediately after the engine is started, a short, low pitched ‘buzz’ may be heard; this is the ABS system priming and is no cause for concern.*

WWW.MANUALS.WS

WWW.MANUALS.WS

STARTING

WARNING

Never start or leave the engine running in an unventilated building - exhaust gases are poisonous and contain carbon monoxide, which can cause unconsciousness and may even be fatal.

Before starting the engine and driving, ENSURE you are familiar with the precautions shown under *'CATALYTIC CONVERTER', page 101*.

In particular, you should be aware that if the engine fails to start, continued use of the starter may result in unburnt fuel damaging the catalytic converter.

1. Check that the parking brake is applied and that the gear selector is 'P' (Park) or 'N' (Neutral).
2. Switch off all unnecessary electrical equipment (including the air conditioning).
3. Turn the starter switch to position 'III' to operate the starter motor. DO NOT press the accelerator pedal while starting, and RELEASE THE KEY as soon as the engine is running.

DO NOT pump the accelerator pedal during starting.

In temperate climates, DO NOT operate the starter for longer than 15 seconds. If the engine fails to start, switch off and wait for at least 10 seconds before trying again.

NOTE: *Continued use of the starter will not only discharge the battery, but may cause damage to the starter motor and the catalytic converter.*

NOTE: *The battery charging, oil pressure and engine malfunction indicator warning lights should extinguish as soon as the engine is running.*

After starting, ensure that the parking brake and foot brake are firmly applied and the accelerator pedal is not depressed while moving the gear selector lever from 'N' or 'P', otherwise, the vehicle may move immediately the selector lever is moved to one of the drive positions (1, 2, 4, D or R). This is particularly important when the engine is cold, because the engine will be idling at a faster speed than normal.

NOTE: *The selector lever cannot be moved from 'P' into a drive position while the engine is running, unless the brake pedal is applied.*

Cold climates

The engine of your Freelander is fitted with an advanced 'drive by wire' engine management system. This is designed to optimise the vehicle's cold start behaviour - pressing the accelerator pedal has no effect on starting performance.

At temperatures down to -15°F (-26°C), the engine should start within 5 to 8 seconds. Below this temperature, engine cranking times will increase significantly and the starter motor may need to be operated continuously for as long as 30 seconds before the engine will start. For this reason, ensure that all non-essential electrical equipment is switched off.

In very cold climates the oil pressure warning light may take several seconds to extinguish.

Sump Heater (Canadian specification only)*

If the vehicle is left in temperatures of -15°F (-25°C) or lower, the sump oil heater should be used to improver the engine's starting characteristics.

The heater plug is clipped behind the lower radiater grille. Unclip the cable adjacent to the plug and pull the plug through the grille. Remove the protective cover from the plug then connect it to an appropriate mains supply cable socket.

WWW.MANUALS.WS

WWW.MANUALS.WS

The cover should always be refitted when the the heater is unplugged from the mains socket to prevent ingress of dirt, snow or other contaminants. It is also recommended that the cable and plug is wire tied to one of the upright grille supports for easy use if the heater is to be used regularly.

DRIVING

WARNING

Vehicle stability

Your vehicle has a higher ground clearance and, hence, a higher center of gravity than ordinary passenger cars to enable the vehicle to perform in a wide variety of different off-road applications. An advantage of the higher ground clearance is a better view of the road, allowing the driver to more easily anticipate problems. Inexperienced drivers should take additional care, remembering that the Freelander is not designed for cornering at the same speeds as conventional passenger cars, any more than a low slung sports car is designed to perform satisfactorily in off-road conditions. As with other vehicles of this type, failure to operate the Freelander correctly may result in loss of control or even vehicle rollover.

Before driving

Learn the layout and function of all the warning lights and controls, and adjust the seat to a comfortable driving position, from which you can ensure full control of the vehicle.

Always start the engine and operate the controls from the driving position.

Instruments and warning lights

Before driving it is important to fully understand the function of the instruments and warning lights.

NOTE: *Red warning lights are of particular importance; illumination indicates that a safety-related problem or potentially serious mechanical fault exists. If a red light illuminates, always stop the vehicle and seek qualified assistance before continuing.*

Warming-up

DO NOT warm-up the engine by allowing it to idle at a slow speed.

In the interests of fuel economy, it is advisable to drive the vehicle straight away, remembering that harsh acceleration and labouring the engine before the normal operating temperature has been reached can damage the engine.

Vehicle Height

The overall height of your vehicle exceeds that of ordinary passenger cars (for convenience the height is shown on the underside of the sun visor). Always be aware of the height of your vehicle and check the available headroom before driving through low entrances. This is particularly important if the vehicle is fitted with a roof rack or if a sunroof is open.

Parking

WARNING

After bringing the vehicle to a stop, ALWAYS apply the parking brake and select 'P' (Park) before releasing the foot brake and switching off the engine.

Switching off

With 'P' (Park) selected, return the starter switch to position 'I' and then to position '0' to remove the key.

NOTE: *The key cannot be removed from the starter switch unless the gear selector is in the 'P' (Park) position.*

WWW.MANUALS.WS

WWW.MANUALS.WS

Breaking-in
Proper breaking-in will have a direct bearing on the reliability and smooth running of your vehicle throughout its life.

In particular, the engine, gearbox, brakes and tires need time to 'bed-in' and adjust to the demands of everyday motoring. During the first 600 miles (1000 km), it is essential to drive with consideration for the breaking-in process and heed the following advice:

- LIMIT maximum road speed to 70 mph (110 km/h) or 3,000 rev/min. Initially, drive the vehicle on a light throttle and only increase engine speeds gradually once the breaking-in distance has been completed.
- DO NOT operate at full throttle or allow the engine to labour in any gear.
- AVOID fast acceleration and heavy braking except in emergencies.

After the breaking-in distance has been completed, engine speeds may be gradually increased.

FUEL ECONOMY

Fuel consumption is influenced by two major factors:

- How your vehicle is maintained.
- How you drive your vehicle.

To obtain optimum fuel economy, it is essential that your vehicle is maintained in accordance with the manufacturer's service schedule.

Items such as the condition of the air cleaner element, tire pressures and wheel alignment will have a significant effect on fuel consumption. But, above all, the way in which you drive is most important. The following hints may help you to obtain better value from your motoring:

- Avoid unnecessary, short, start-stop journeys.
- Avoid fast starts by accelerating gently and smoothly from rest.
- Do not drive in the lower gears for longer than necessary.
- Decelerate gently and avoid sudden and heavy braking.
- Anticipate obstructions and adjust your speed accordingly well in advance.
- When stationary in traffic, select neutral to improve fuel economy and air conditioning performance.

WWW.MANUALS.WS

WWW.MANUALS.WS

EMISSION CONTROL SYSTEM

WARNING

Exhaust fumes contain poisonous substances which can cause unconsciousness and may even be fatal.

- ***DO NOT inhale exhaust gases.***
- ***DO NOT start or leave the engine running in an enclosed unventilated area, or drive with the taildoor open.***
- ***DO NOT modify the exhaust system from the original design.***
- ***ALWAYS repair exhaust system leaks immediately.***
- ***If you think exhaust fumes are entering the vehicle have the cause determined and corrected immediately.***

Land Rover vehicles are fitted with emission and evaporative control equipment necessary to meet a number of territorial requirements.

In many countries it is against the law for vehicle owners to modify or tamper with emission control equipment, or to sanction the unauthorised replacement or modification of this equipment. In such cases the vehicle owner and the repairer may both be liable for legal penalties.

It is important to remember that all Land Rover retailers are properly equipped to perform repairs and to maintain the emission control system on your vehicle.

WWW.MANUALS.WS

WWW.MANUALS.WS

TYPE OF FUEL

IMPORTANT INFORMATION

ONLY USE UNLEADED FUEL

- Unleaded fuel is essential for proper operation of the emission control system.

DO NOT use leaded fuel! Your engine is designed to use unleaded fuel ONLY.

- Even a very small quantity of leaded fuel will damage your vehicle's emission control system and could invalidate the emissions warranty. In addition, leaded fuel will damage the oxygen sensors in the fuel injection system and also seriously damage the catalyst in the catalytic converter.

Fuel system cleaning agents should be avoided, as many of these products can be harmful to gaskets and other materials used in fuel system components.

Octane requirements

Unleaded gasoline with a CLC or AKI minimum octane rating of 87 is recommended.

NOTE: *Federal law requires that gasoline octane ratings be posted on the pumps. The Cost of Living Council (CLC) octane rating or Anti Knock Index (AKI) octane rating shown is an average of Research Octane Number (RON) and Motor Octane Number (MON).*

NOTE: *Engine performance and fuel economy may improve if higher octane fuel is used.*

Using unleaded fuel with an octane rating lower than that recommended above may reduce performance and economy and can also cause persistent, heavy ‘engine knock’ (a metallic rapping noise). If severe, this can lead to engine damage.

If heavy engine knock is detected when using the recommended octane rated fuel, or if steady engine knocking is present while maintaining a steady speed on level roads, contact your retailer for advice.

NOTE: *An occasional, light, engine knock while accelerating or climbing hills is acceptable.*

Octane enhancers

The use of octane enhancers is not recommended, and may invalidate the vehicle warranty.

NOTE: *Reformulated gasolines and gasolines that contain detergents, anti-corrosion and stability additives are recommended - they will help your vehicle maintain the correct level of emissions and engine performance.*

Driveability

If you encounter driveability, starting and stalling problems, especially in high ambient temperatures or at high altitude when the engine is cold, it may be caused by poor quality fuel. Try an alternative brand, and if the problem persists, seek advice from your retailer.

Gasoline/oxygenated fuel blends

To avoid invalidating the vehicle warranty, use ONLY fuels blended within the following limits:

- Up to 15% of Methyl Tertiary Butyl Ether (MTBE) and unleaded fuel mix.
- Up to 15% of Ethyl Tertiary Butyl Ether (ETBE) and unleaded fuel mix.
- Up to 10% of Ethanol (Ethyl or grain alcohol) and unleaded fuel mix.

WWW.MANUALS.WS

WWW.MANUALS.WS

Methanol/unleaded fuel blends
In some areas, it is possible to buy unleaded fuel that is blended with up to 5% Methanol (Methyl or wood alcohol) and cosolvents and corrosion preventatives. Using these blends can cause driveability problems and damage to the fuel system components. Their use may also invalidate the vehicle warranty.
WHEREVER POSSIBLE, AVOID USING FUEL CONTAINING METHANOL!

WARNING

Automotive fuels can cause serious injury, and even death if misused.

Methanol/unleaded fuel blends, even in small amounts, can cause blindness and possible death if swallowed. Additionally, take precautions to prevent methanol from coming into contact with the skin.

GAS STATION SAFETY

Always take sensible precautions when refuelling:

- Switch off the engine.
- Do not smoke or introduce other ignition sources.
- Switch off mobile phones.
- Take care not to spill fuel.
- Do not overfill the tank.
- Do not fill gas cans in the vehicle.
- Use only the hold-open latch provided on the gasoline pump. Never jam the latch open with some other object.

WARNING

Petroleum gases are highly inflammable and, in confined spaces, are also extremely explosive.

Always place portable gasoline containers on the ground while filling. A fire may result if gasoline is pumped into a container that is inside a vehicle or on a truck bed. You could be burned!

FUEL FILLER

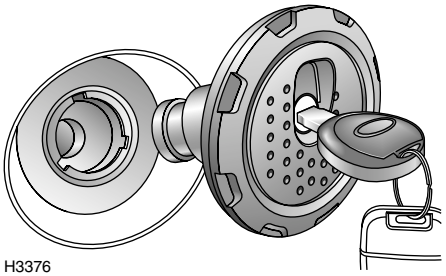

H3376

The fuel filler is located in the rear right-hand fender. Insert the key in the lock, turn it anti-clockwise and allow any pressure inside the tank to escape, before removing the cap.

NOTE: *The key cannot be removed from the filler cap unless the cap is correctly positioned in the filler neck.*

WWW.MANUALS.WS

WWW.MANUALS.WS

FUEL FILLING

Gas station pumps are equipped with automatic cut-off sensing to avoid fuel spillage. Fill the tank SLOWLY until the filler nozzle automatically cuts-off the supply. DO NOT attempt to fill the tank beyond this point or spillage could result due to expansion of the fuel.

The fuel filler neck will accept ONLY a narrow filler nozzle of the type found on pumps that deliver UNLEADED fuel. A flap lies across the filler neck; insert the nozzle sufficiently to fully open the flap before filling.

Filling difficulties

The fuel delivery rate of gas station pumps can vary significantly. This, coupled with the fact that modern pumps are equipped with a sensor which automatically cuts off the supply as soon as turbulence is detected in the upper part of the vehicle's filler neck, could result in isolated fuel filling problems.

EMPTY FUEL TANK

NEVER allow the vehicle to run out of fuel - the resultant misfire may destroy the catalytic converter.

In the event of a fuel tank running dry, contact your Land Rover retailer before attempting to start the engine.

FUEL CUT-OFF SWITCH

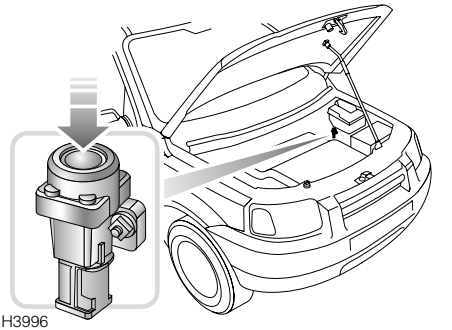

The fuel cut-off switch is a safety device which, in the event of a collision or sudden impact, automatically cuts off the fuel supply to the engine.

The switch is located inside the engine compartment on the left hand side, beneath, and to the rear of, the engine compartment fuse box (a label attached to the bulkhead will assist location of the switch). If the switch has been activated, it must be reset by pressing the rubber top (arrowed in illustration) before the engine can be restarted.

See also *'DOOR LOCKING CUT-OFF SWITCH', page 32*.

WARNING

Always check for fuel leaks before resetting the switch! Activating the switch when the fuel system has been damaged (evidenced by fuel leakage and odour) will cause additional fuel leakage, increasing the risk of fire and personal injury.

WWW.MANUALS.WS

WWW.MANUALS.WS

CATALYTIC CONVERTER

The exhaust system on your vehicle incorporates a catalytic converter, which converts poisonous exhaust emissions from the engine into environmentally less harmful gases.

CAUTION: Catalytic converters can be easily damaged through improper use, particularly if the wrong fuel is used, or if an engine misfire occurs. For this reason it is VERY IMPORTANT that you heed the precautions which follow.

Fuel

ONLY use fuel recommended for your vehicle, see *'TYPE OF FUEL', page 98*.

Starting the engine

- DO NOT continue to operate the starter after a few failed attempts (unburnt fuel may be drawn into the exhaust system, thereby poisoning the catalyst), and do not attempt to clear a misfire by pressing the accelerator pedal - seek qualified assistance.
- When starting a COLD engine, DO NOT drive if a misfire is suspected and do not attempt to clear a misfire by pressing the accelerator - seek qualified assistance.
- Do not attempt to push or tow-start the vehicle.

WWW.MANUALS.WS

WWW.MANUALS.WS

Driving

- If a misfire is suspected, or the 'Service engine soon' warning light is flashing, avoid high speeds and seek immediate assistance from your Land Rover retailer.
- NEVER allow the vehicle to run out of fuel (the resultant misfire could damage the catalyst).
- Consult your retailer if your vehicle is burning excessive oil (blue smoke from the exhaust), as this will progressively reduce catalyst efficiency.
- On rough terrain do not allow the underside of the vehicle to be subjected to heavy impacts which could damage the catalytic converter.
- DO NOT overload or excessively 'rev' the engine.
- DO NOT switch off the engine when the vehicle is in motion with a drive gear selected.

WARNING

Exhaust system temperatures can be extremely high - DO NOT park on ground where combustible materials such as dry grass or leaves could come into contact with the exhaust system - in dry weather a fire could result.

Vehicle maintenance

- Any engine misfire, loss of engine performance or engine run-on, could seriously damage the catalytic converter. For this reason, it is vital that unqualified persons do not tamper with the engine, and that regular systematic maintenance is carried out by a Land Rover retailer.
- DO NOT run the engine with a spark plug or HT lead removed, or use any device that requires an insert into a spark plug.

WWW.MANUALS.WS

WWW.MANUALS.WS

CommandShift™ TRANSMISSION

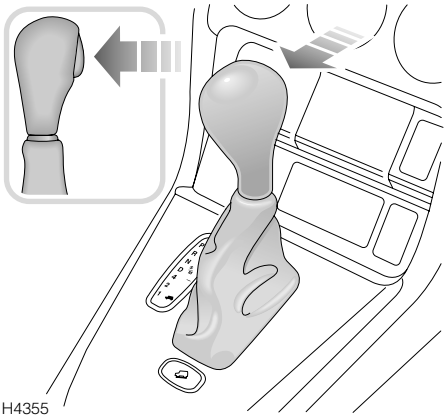

CommandShift™ provides both automatic and manual operation of the gears.

Automatic operation
The transmission is naturally in automatic mode. With the engine started, gear selection can be made by moving the selector backward or forward to the appropriate position in a similar manner to other automatic gearboxes.

GEAR SELECTOR LEVER

Selector release button
The gearbox is fitted with a locking mechanism, designed to minimise the risk of accidental selection of the ‘P’ (Park) and ‘R’ (Reverse) positions.

The selector release button (arrowed in illustration) must be pressed while selecting ‘R’ from ‘P’, and also to enable the lever to be moved between the ‘N’ and ‘R’ positions.

The selector release button must also be pressed when selecting ‘2’, and when selecting ‘N’ from ‘D’ and when selecting ‘2’ from ‘1’.

NOTE: *With the engine running, or the starter switch in position ‘II’, the selector lever cannot be moved from ‘P’ (Park) into a drive position unless the foot brake is applied.*

NOTE: *In key position 1, the selector lever can be moved from ‘P’ to select a gear.*

CAUTION: DO NOT select ‘P’ or ‘R’ if the vehicle is moving.

CAUTION: DO NOT select a forward drive gear when the vehicle is moving backwards.

CAUTION: To prevent transmission wear, keep engine speed as low as possible when moving the selector between ‘R’ and a forward gear.

WWW.MANUALS.WS

WWW.MANUALS.WS

Selector lever positions
An indicator light on the selector panel and a number or letter on the digital display in the instrument panel, identify the selected gear position.

'P' - Park:
This position mechanically locks the transmission and should be selected before switching the engine off. To avoid transmission damage, ensure the vehicle is completely stationary, with the handbrake applied, before selecting 'P'.

The selector release button MUST be pressed, in order to move the selector lever out of the Park position.

'R' - Reverse:
Before selecting reverse, ensure the vehicle is stationary, with the brakes applied. Press the selector release button in order to move the selector lever into Reverse.

With the selector lever in the 'R' position, Hill Descent Control can be selected (see *'HILL DESCENT CONTROL', page 108*).

'N' - Neutral:
Select neutral when the vehicle is stationary and the engine is required to idle for a brief period (at traffic lights, for example). In neutral, the transmission is not locked, so the parking brake must be applied whenever 'N' is selected.

Press the selector release button to move from 'D' (Drive) to neutral and from neutral to reverse.

'D' - Drive:
Select for all normal driving; full automatic gear changing occurs on all five forward gears, according to road speed and accelerator position.

'4' (1st, 2nd, 3rd and 4th gears):
Automatic gear changing is limited to the lower four gears only; use this position for town driving and in congested traffic conditions.

'2' (1st and 2nd gears):
Automatic gear changing is limited to the first and second gears only; use when driving up steep gradients, for negotiating very narrow twisting roads and for most 'Off-road' driving. This position also provides moderate engine braking when descending slopes.

The selector release button MUST be pressed, in order to move the selector lever into, or out of, the '2' position.

'1' (1st gear only):
Use on very severe gradients. With the selector in this position, Hill Descent Control can be selected (see *'HILL DESCENT CONTROL', page 108*).

Sport mode
In Sport mode, full automatic progression through the gear ratios is retained. By selecting Sport mode however, the power transmitted to the road wheels is increased, resulting in improved acceleration. Engine revs are higher in all driving conditions, making the vehicle more responsive to driver commands.

To select Sport mode, move the gear lever sideways across the gate (from the Drive position towards the right hand side of the vehicle) - the word SPORT will appear in the digital display.

Sport mode can be deselected at any time, by returning the lever to the 'D' position.

WWW.MANUALS.WS

WWW.MANUALS.WS

CommandShift™ manual gear selection

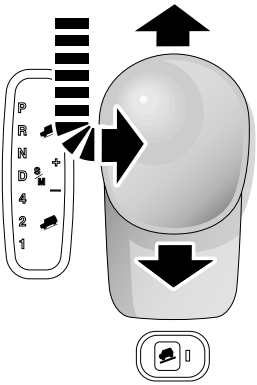

H3530

There are five predetermined gear ratios, all of which can be selected sequentially by a single forward or rearward movement of the gear selector lever, as follows:

1. With ‘D’ (Drive) selected, move the gear selector lever sideways from the ‘D’ position towards the right hand side of the vehicle. This is exactly the same as selecting Sport mode; the gearbox will then remain in ‘Sport’ until the gear selector is moved forward or back (see ‘3’, below).
2. The transmission then automatically selects the ratio most appropriate to the vehicle's road speed and accelerator depression.
3. A single forward movement of the selector lever will change the transmission to a higher gear, while rearward movement of the lever will change down to a lower gear. Repeated forward or rearward movements of the lever can be made until the desired gear ratio has been selected (the selected gear will be indicated in the digital display in the instrument panel).
4. To deselect manual mode, simply move the selector lever sideways, back to the ‘D’ position. Automatic gear changing will then resume.

NOTE: *When coming to a halt with manual mode selected, the vehicle will remain in 2nd gear. When starting again, ‘kick down’ can be used to select 1st gear if necessary (see following page).*

USING AN AUTOMATIC GEARBOX

The following information is particularly important for drivers who are unfamiliar with the techniques required to drive vehicles with automatic transmission.

Starting

The engine can only be started with the selector lever in the ‘P’ (Park) or ‘N’ (Neutral) positions.

- ALWAYS apply the parking brake and foot brake before starting the engine.
- KEEP THE BRAKES APPLIED while moving the selector lever into a drive position (the selector lever cannot be moved from the ‘P’ position unless the foot brake is applied).
- DO NOT ‘rev’ the engine or allow it to run above normal idle speed while selecting ‘D’ or ‘R’, or while the vehicle is stationary with any gear selected.
- ALWAYS keep the brakes applied until you are ready to move off - remember, once a drive gear has been selected, an ‘automatic’ will tend to creep forward (or backward if reverse is selected).
- DO NOT allow the vehicle to remain stationary for any length of time with a drive gear selected and the engine running (always select ‘N’ if the engine is to idle for a prolonged period).

CAUTION: Vehicles fitted with automatic transmission CANNOT be ‘push’ or ‘tow’ started.

WWW.MANUALS.WS

WWW.MANUALS.WS

Driving
When driving, the transmission will automatically adjust to the most appropriate ratio, according to accelerator position, vehicle speed and terrain (whether the vehicle is driving uphill, downhill or on the flat).

Gear change speeds
With ‘D’ selected, the road speeds at which gear changes take place will vary according to the position of the accelerator pedal: minimum acceleration will result in gear changes at low road speeds, while larger throttle openings will cause the gearbox to delay gear changes until faster road speeds have been reached (thereby increasing the rate of acceleration).

With practice, gear changes can be made to occur at a wide range of road speeds depending on the accelerator position.

‘Kick-down’
To provide rapid acceleration for overtaking, push the accelerator pedal to the full extent of its travel in a single, quick movement (this is known as ‘kick-down’). Up to a certain speed, this will cause an immediate downshift to the lowest appropriate gear, followed by rapid acceleration. Once the pedal is relaxed, normal gear change speeds will resume (dependent upon road speed and accelerator pedal position).

If the accelerator pedal is pushed down to its full extent and then immediately released, unlike most ‘automatic’ vehicles, the transmission will not automatically select the highest suitable gear ratio. Instead, the transmission will maintain the current gear ratio, to enable engine braking. This function is especially useful when an overtaking maneuver is aborted, enabling the driver to retake the vehicle's previous road position.

Parking
After bringing the vehicle to a stop, ALWAYS apply the parking brake and select ‘P’, before releasing the foot brake and switching off the engine.

WWW.MANUALS.WS

WWW.MANUALS.WS

AUTOMATICALLY SELECTED MODES

The transmission control system automatically selects different gear change modes, listed below, designed to suit a variety of driving conditions.

NOTE: *Automatically selected modes cannot be manually selected by the driver and will not operate if 'Sport' mode is selected.*

Hill ascent, trailer and high altitude mode

A suitable gear change pattern is selected to counter momentum loss, caused by the more frequent gear changing which can occur when climbing hills, or when towing a trailer. This gear change pattern is also selected at high altitudes to combat low engine torque.

Cruise control mode

When cruise control is activated, a suitable gear change pattern is selected which is less sensitive to throttle changes. This reduces the amount and frequency of gear changes, providing a smoother ride.

High coolant temperature mode

In high ambient temperatures during extreme load conditions, it is possible for the engine and the gearbox to overheat. At a certain temperature the transmission will select a gear change pattern designed to aid the cooling process, whilst enabling the gearbox to continue performing normally in high temperatures.

Smooth change mode

Engine torque is reduced during gear changes, creating a much smoother ride.

WWW.MANUALS.WS

WWW.MANUALS.WS

HILL DESCENT CONTROL

Hill Descent Control (HDC) is of particular value when driving off road, and operates in conjunction with the anti-lock braking system to provide greater control in off-road situations, when descending severe gradients.

Selecting HDC

HDC cannot be selected when in CommandShift™ mode, Sport mode, Drive or positions ‘2’ and ‘4’. HDC is only available when gear selector positions ‘1’ or ‘R’ are engaged.

NOTE: *Reverse gear should only be selected when the vehicle is stationary.*

With HDC selected, if ‘1’ or ‘R’ have been engaged, the HDC information light (GREEN) in the instrument panel will illuminate continuously (if ‘1’ or ‘R’ have not been selected, the information light will flash).

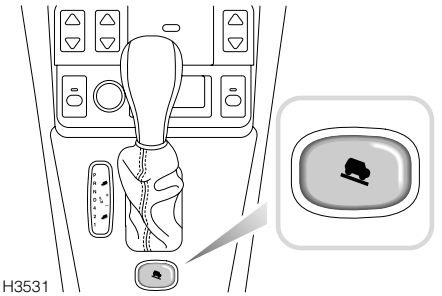

To select, press the HDC button, situated to the rear of the gear selector lever.

To deselect, press the HDC button again.

Hill descent control in action

During a descent, if engine braking is insufficient to control the vehicle speed, HDC (if selected) automatically operates the brakes to slow the vehicle and maintain a speed relative to the accelerator pedal position.

When driving off-road, HDC can be permanently selected, to ensure that control is maintained whenever ‘1’ or ‘R’ are engaged. ABS and traction control are still fully operational and will assist if the need arises.

NOTE: *HDC can be left selected while off-road driving, the system will only operate when needed and gear changes can be carried out in the normal way.*

If the brake pedal is depressed when HDC is active, HDC is overridden and the brakes will perform as normal (a pulsation might be felt through the brake pedal). If the brake pedal is then released, HDC will recommence operating if necessary.

In extreme circumstances, the HDC system may cause brake temperatures to exceed their pre-set limits. If this occurs, the information warning light will extinguish and the HDC ‘failure' warning light (AMBER) will start to flash. You should stop the vehicle and disengage HDC. If HDC remains operating and the brake temperature continues to rise the HDC system will gradually fade out and the ‘failure’ warning light will continue to flash until the brakes have cooled.

WWW.MANUALS.WS

WWW.MANUALS.WS

HDC fade-out

HDC fade-out gradually decreases the HDC brake intervention with the effect that the rate of hill descent will increase. If this occurs either one of the two HDC warning lights will flash for the period that HDC takes to fade. HDC will be disabled completely once the descent is complete.

If required (e.g. the angle of the descent levels out significantly), fade-out may be achieved deliberately by deselecting HDC while the system is operating or by changing out of the appropriate operating gear, in which case the green information light will flash.

If a fault with the HDC system is detected, or if the braking system reaches a pre-set temperature due to extreme conditions, HDC will automatically fade out (amber failure light flashes).

HDC warning lights

HDC information light - GREEN: The light illuminates briefly as a bulb check when the starter switch is turned to position ‘II’. If HDC is selected when either of the operating gears are engaged (‘1’ or ‘R’), the light will illuminate continuously. When HDC is selected and a non-operating gear is engaged, the light will flash to inform the driver that HDC is selected, but not operating. The light will also flash to indicate that HDC is fading out.

HDC ‘failure’ light - AMBER: The light illuminates briefly as a bulb check when the starter switch is turned to position ‘II’. The light will start flashing if the brakes become in danger of overheating and continue flashing until the brakes have cooled sufficiently for HDC to operate again.

If the light illuminates at any other time, a fault in the system is indicated. If this occurs, deselect HDC and consult your Land Rover retailer.

WWW.MANUALS.WS

WWW.MANUALS.WS

CRUISE CONTROL

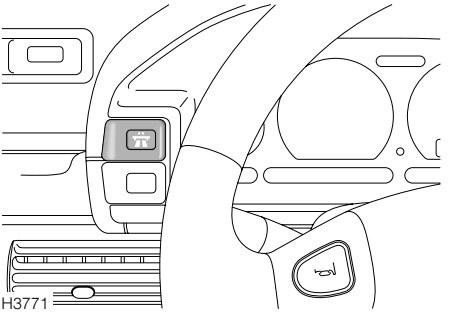

Cruise control enables the driver to maintain a constant road speed without using the accelerator pedal. This is particularly useful for freeway cruising or for any journey where a constant speed can be maintained for a lengthy period.

The cruise control system has three switches; a master switch on the left side of the instrument binnacle (illustrated above) and two control switches marked 'SET +' and 'RES' mounted on the steering wheel.

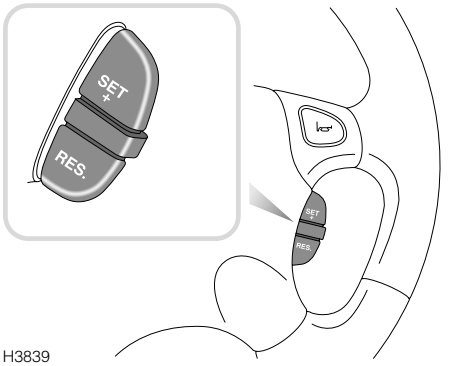

WARNING

DO NOT use cruise control on winding or slippery road surfaces, or in traffic conditions where a constant speed cannot easily be maintained.

CAUTION: Always observe the following precautions:

DO NOT use cruise control when using low range or reverse gears.

Use of 'sport' mode is not recommended when cruise control is selected.

ALWAYS switch off the master switch when you no longer intend to use cruise control to avoid accidental activation of cruise control.

DO NOT rest your foot under the accelerator pedal while cruise control is engaged - your foot could become trapped.

WWW.MANUALS.WS

WWW.MANUALS.WS

To operate:

1. Press the master switch (the switch indicator light and the warning light in the instrument panel illuminate whenever the switch is pressed to the 'on' position).
2. Accelerate until the desired cruising speed is reached. This must be above the system's operational minimum speed of 28 mph (45 km/h).
3. Press the 'SET +' switch to set the vehicle speed in the system's memory. Cruise control will now maintain that road speed without the need for operation of the accelerator pedal.

With cruise control operating, speed can be increased, by normal use of the accelerator, when overtaking for example. When the accelerator is released, road speed will return to the selected cruising speed.

However, if

a road speed of 31 mph (50 km/h) above the selected cruising speed has been reached

or

a speed above the selected cruising speed has been maintained for more than 45 seconds

cruise control will automatically disengage.

To reduce the cruising speed:

Press the 'RES' switch to slow the vehicle, until the required speed has been reached. Then press the 'SET +' switch to establish the new cruising speed (remember that cruise control will not operate at speeds below 28 mph (45 km/h)).

To increase the set cruising speed:

Press and hold the 'SET +' switch: the vehicle will accelerate automatically. Release the switch as soon as the desired speed has been reached.

Alternatively, the set speed can be increased incrementally by 'tapping' the 'SET +' switch. Each press of the switch will increase the speed by approximately 1 mph (1.5 km/h).

Disengaging cruise control

The cruise control will automatically disengage when the gear selector is moved into 'N' (Neutral), or when the brake pedal is pressed. Cruise control can also be disengaged by pressing the 'RES' switch.

To re-engage cruise control at the previously set speed, press the 'RES' switch.

NOTE: *The speed held in the cruise control memory will be cancelled when either the cruise control master switch or the starter switch is turned off.*

WWW.MANUALS.WS

WWW.MANUALS.WS

FOOT BRAKE

For your safety, the hydraulic braking system operates through dual circuits. However, in the event of a brake failure where only one circuit is operational, the vehicle should only be driven at slow speed to the nearest Land Rover retailer. In these circumstances, exercise EXTREME CAUTION and be aware that much greater pedal effort and longer stopping distances will be required.

Servo assistance

The braking system is servo assisted, but ONLY when the engine is running. Without this assistance greater braking effort is necessary to safely control the vehicle, resulting in longer stopping distances. Always observe the following precautions:

- NEVER allow the vehicle to coast with the engine turned off.
- ALWAYS take particular care when being towed with the engine turned off.
- If the engine should stop for any reason while the vehicle is in motion, bring the vehicle to a halt as quickly as traffic conditions safely allow, and DO NOT pump the brake pedal as the braking system may lose any remaining assistance available.

WARNING

- ***NEVER place non-approved floor matting or any other obstructions under the brake pedal. This restricts pedal travel and braking efficiency.***
- ***NEVER move a vehicle without the engine running because braking assistance will not be available. The pedal brakes will still function, but more pressure will be required to operate them.***

WARNING

If the brake warning light should illuminate while the vehicle is in motion, bring the vehicle to a halt as quickly as traffic conditions and safety permit and seek qualified assistance before continuing. DO NOT pump the brake pedal - the braking system may lose any remaining power assistance available.

WWW.MANUALS.WS

WWW.MANUALS.WS

Brake pads

Brake pads and linings require a period of bedding in. For the first 200 miles (300 km), you should avoid situations where heavy braking is required.

Remember that regular servicing is vital to ensure that the brake components are examined for wear at the correct intervals and changed whenever necessary to ensure long term safety and optimum performance.

CAUTION: DO NOT rest your foot on the brake pedal while driving as this may overheat the brakes, reduce their efficiency and cause excessive wear.

Brake warning light

If the warning light on the instrument panel illuminates while driving, and the handbrake is fully released, a fault with the braking system is indicated. Check the brake fluid level; if the light continues to illuminate, seek qualified assistance before continuing.

WARNING

If the brake warning light should illuminate while the vehicle is in motion, be prepared for increased brake pedal travel, and then stop the vehicle as quickly as traffic conditions and safety permit and seek qualified assistance before continuing.

Wet conditions

CAUTION: Driving through water or even very heavy rain may adversely affect braking efficiency. Always dry the braking surfaces by intermittent light application of the brakes, first ensuring that you are at a safe distance from other road users.

WWW.MANUALS.WS

WWW.MANUALS.WS

PARKING BRAKE

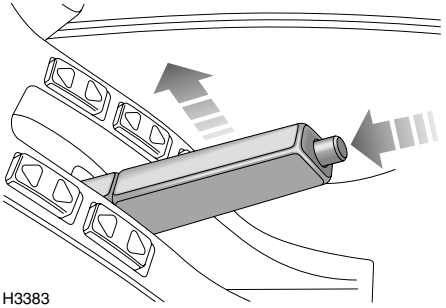

The parking brake operates on the rear wheels only and should not require adjustment.

To engage the parking brake, depress the button and pull the lever up fully.

To release, pull the lever up slightly, depress the button (arrowed in illustration) and lower the lever.

When parking on a slope, do not rely on the parking brake alone to hold the vehicle. Always ensure the parking pawl of the gearbox has fully engaged by carefully releasing the foot brake and allowing the vehicle to 'rock' into 'P' (park).

CAUTION: DO NOT apply the parking brake whilst the vehicle is in motion (except in an emergency) as this could result in loss of vehicle control and damage to the transmission.

WARNING

ALWAYS use the wheel chocks when jacking the vehicle.

IMPORTANT INFORMATION

Always apply the parking brake fully whenever you park.

DO NOT rely on the parking brake to operate effectively if the vehicle has been subjected to immersion in mud and water (see *'Off-Road Driving'* section).

WWW.MANUALS.WS

WWW.MANUALS.WS

ANTI-LOCK BRAKES

CAUTION: ABS cannot overcome the physical limitations of stopping the vehicle in too short a distance, cornering at too high a speed, or the danger of aquaplaning, i.e. where a layer of water prevents adequate contact between the tires and the road surface.

The fact that a vehicle is fitted with ABS must never tempt the driver into taking risks that could affect his/her safety or that of other road users. In all cases, it remains the driver's responsibility to drive within normal safety margins, having due consideration for prevailing weather and traffic conditions.

The ABS is designed to operate only with the tires specified in 'Technical Data' (see *'WHEELS & TIRES', page 208*) and genuine Land Rover parts. The manufacturers cannot accept any responsibility for inefficient operation of the system caused by modifications to the vehicle, or the fitting of non-approved components. Always consult your Land Rover retailer for advice.

The driver should always take account of the surface to be travelled over and the fact that brake pedal reactions will be different to those experienced on a non-ABS vehicle.

The purpose of the anti-lock braking system (ABS) is to allow efficient braking without wheel locking - thereby allowing the driver to retain steering control of the vehicle.

Under normal braking conditions, (where sufficient road surface friction exists to reliably bring the vehicle to a halt without the wheels locking), ABS will not be activated. However, should the braking force exceed the available adhesion between the tires and the road surface causing one or more wheels to lock, then ABS will come into operation.

This will be recognisable by a rapid pulsation felt through the brake pedal.

NOTE: *Immediately after the engine is started, a short, low pitched 'buzz' may be heard; this is the ABS system priming and is no cause for concern.*

Anti-lock braking in action

In normal road use, during an emergency situation full braking effort should always be applied even when the road surface is slippery. The anti-lock braking system constantly monitors the speed of each wheel and varies braking pressure to each, according to the amount of traction available, thereby ensuring that the wheels do not lock.

No matter how hard you brake, you should be able to continue steering the vehicle as normal.

WARNING

DO NOT pump the brake pedal at any time; this will interrupt operation of the system and may increase braking distance.

DO NOT place non-approved floor mats, or any other obstruction under the brake pedal. This restricts pedal travel and, therefore, impairs braking efficiency.

NOTE: *On soft surfaces such as powdery snow, sand or gravel, braking distances may be greater than those achievable on a vehicle without anti-lock braking. This is because the action of locked wheels on loose surfaces, is to build up a wedge of material in front of the wheels, which assists in bringing the vehicle to a halt. However, even in these circumstances, the anti-lock braking system will provide better stability and steering control.*

WWW.MANUALS.WS

WWW.MANUALS.WS

Warning light

The anti-lock braking system incorporates a monitoring system, which checks that all the electrical components are in working order, as soon as the starter switch is turned to position 'II' and also at frequent intervals during your journey.

The warning light on the instrument panel is an important part of this system. The warning light should illuminate for a short period as a bulb and system check when the starter switch is turned to position 'II' and then extinguish (the light may flash during this period).

If the light remains on or subsequently illuminates while driving, a fault has been detected by the self monitoring system and full ABS control may not be available - consult your retailer at the earliest opportunity. The normal braking system remains fully operational and is not affected by partial or full loss of the ABS. However, braking distances may increase.

Additional operating information

While anti-lock braking is designed to operate equally effectively in 'off-road' driving conditions, on certain surfaces total reliance on the system may be unwise - remember, in normal circumstances, anti-lock braking operates only AFTER one or more roadwheels has reached the limit of its grip. It cannot reliably compensate for driver error or inexperience on difficult off-road surfaces.

Note the following:

- Under ABS control, heavy braking on a dry road may produce tire noise and slight marking of the road surface. Neither need cause concern.
- On soft or deep surfaces such as powdery snow, sand or gravel, and on extremely rough ground, the braking distance required by the anti-lock braking system may be greater than those achievable with a non-ABS system, even though improved steering would be experienced. This is because the natural action of locked wheels on soft surfaces is to build up a wedge of surface material in front of the wheels, which assists in stopping.
- The driver should always take account of the surface to be travelled over and the fact that brake pedal reactions will be different from those experienced on a non-ABS vehicle.
- When maximum braking is required on loose or bumpy surfaces, full braking effort should be applied.
- If the vehicle is stopped on a very steep slope where little traction is available, it may slide with the wheels locked because there is no wheel rotation to signal movement to the ABS. To counteract this, briefly release the brakes to permit some wheel movement, then re-apply the brakes to allow the system to gain control at a suitable speed.
- Before driving off-road read and thoroughly understand the *'Off-road driving'* section of this handbook.

WWW.MANUALS.WS

WWW.MANUALS.WS

ELECTRONIC TRACTION CONTROL

The purpose of electronic traction control is to aid traction when one wheel spins while the other still has good grip (if one side of the vehicle is on ice and the other is on tarmac, for example). The system works by applying the brake to a spinning wheel in order to transfer torque to the other side of the axle.

NOTE: *Traction control only operates below approximately 30 mph (50 km/h).*

Warning light

The instrument panel warning light will illuminate whenever the system is active (for a minimum of 2 seconds) and also illuminates as a bulb check (for approximately 4 seconds) when the starter switch is turned to position ‘II’.

If the warning light illuminates continuously while traction control is NOT operating, a fault with the system is indicated; seek qualified assistance.

The light also has an overheat function: if traction control is required, but the brakes are too hot, the light will flash for the period when traction control is required and traction has been lost

WWW.MANUALS.WS

WWW.MANUALS.WS

REMOVING AND FITTING THE HARDBACK

Removal

WARNING

Hardback is a heavy item. Removal/refitting should be carried out by two people.

NOTE: *It is recommended that roof bars be removed prior to removing the hardback (see 'REMOVING AND FITTING THE ROOF BARS*', page 121).*

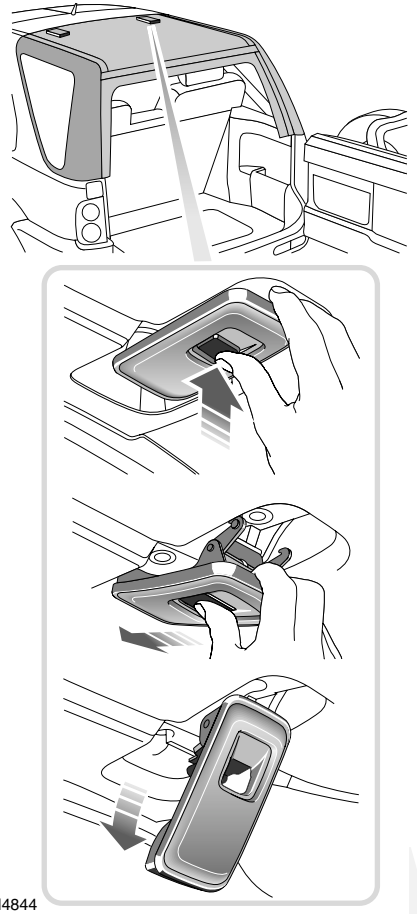

H4844

1. Press the button on the catch, then push the catch forwards and allow to drop.

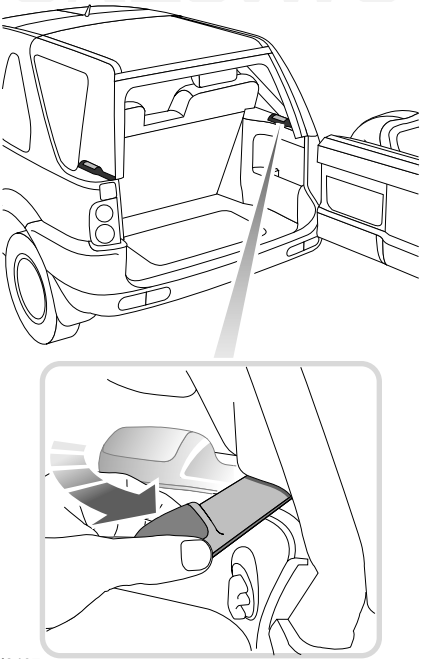

H3427

2. Pivot the rear locking levers 90° rearwards.

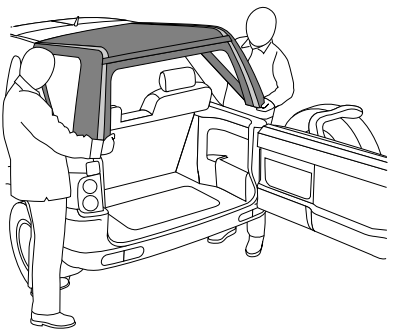

H3428

3. With assistance, lift the hardback (rear first) from the vehicle.

WWW.MANUALS.WS

Fitting

NOTE: *It is recommended that the roof bars be removed prior to fitting the hardback to the vehicle (see 'REMOVING AND FITTING THE ROOF BARS*', page 121).*

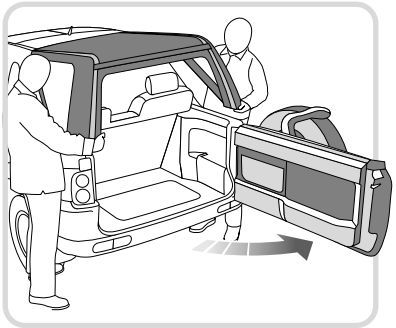

H3429

1. Open taildoor, then with assistance, angle the hardback as shown and position on the vehicle.

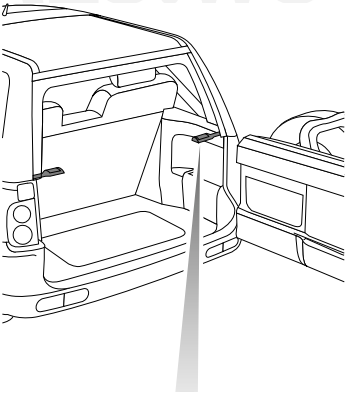

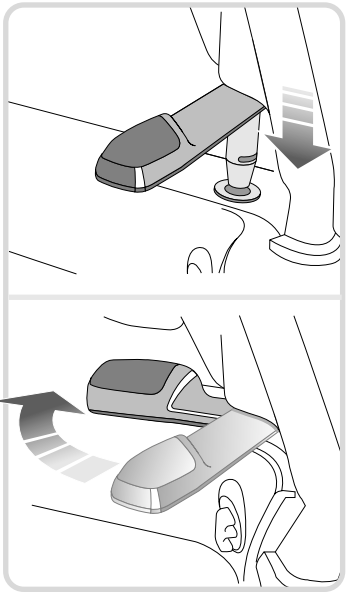

H3430

2. Locate the rear locking pins and pivot both locking levers 90° forwards.

WWW.MANUALS.WS

WWW.MANUALS.WS

WARNING

Do not drive the vehicle if the header catches are not secure.

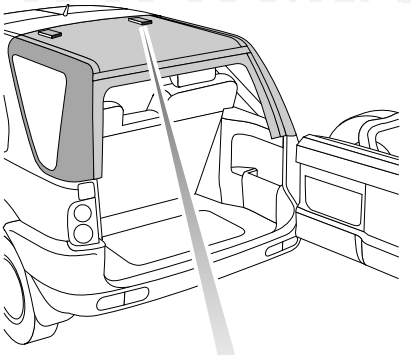

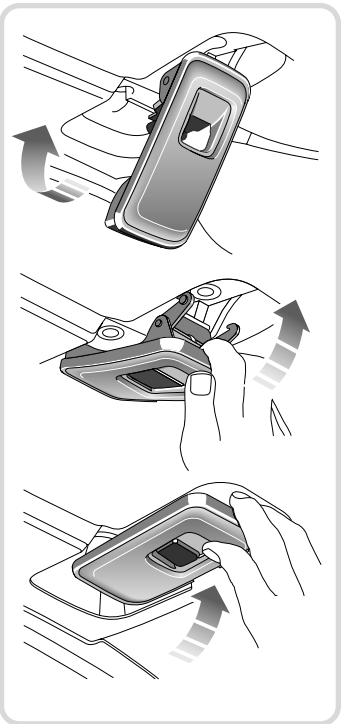

H4845

3. Push the front of the header catch upwards, slide it rearwards and push the rear of the catch upwards until it ‘snaps’ into position.

WWW.MANUALS.WS

WWW.MANUALS.WS

REMOVING AND FITTING THE ROOF BARS*

Removal

WARNING

DO NOT remove or adjust any bolt other than those highlighted in the following illustrations.

NOTE: *To avoid causing accidental damage to the vehicle, removal and refitting of roof bars is best carried out by two people.*

The following procedure must be repeated for the right hand side of the roof bars.

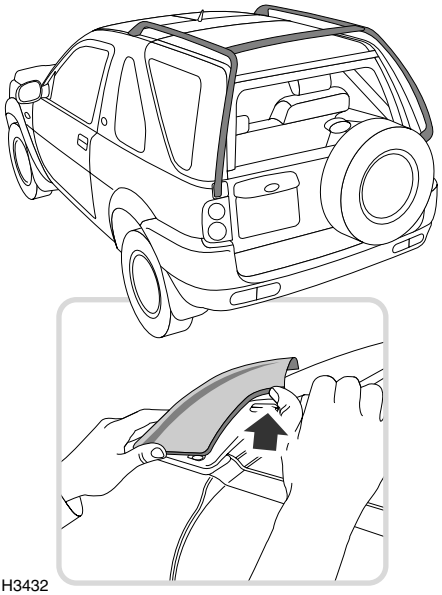

H3432

1. Remove front finisher - push upwards where arrowed.

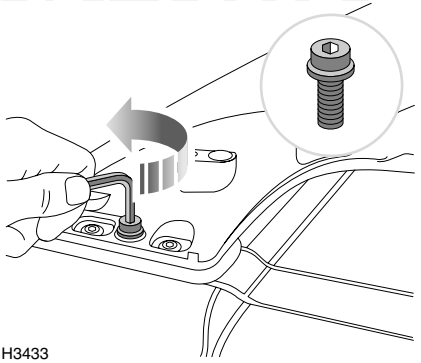

H3433

2. Unscrew the front fixing bolt using a Torx key.

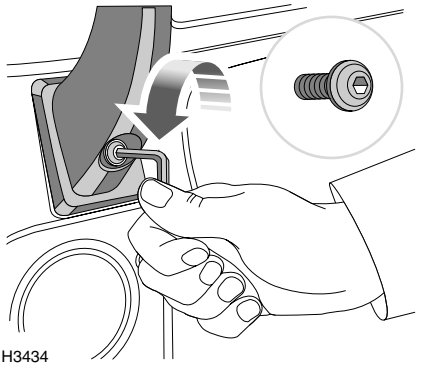

H3434

3. Unscrew the rear fixing bolt.

WWW.MANUALS.WS

WWW.MANUALS.WS

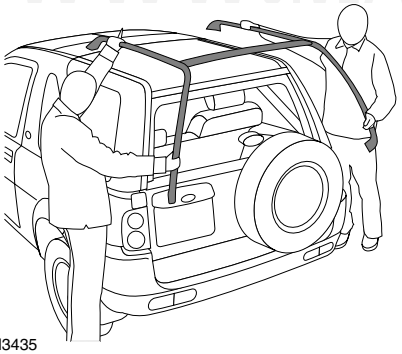

H3435

4. With assistance, lift the roof bars up and rearwards off the vehicle.

Fitting

NOTE: *The following procedure must be repeated for the right hand side of the roof bars.*

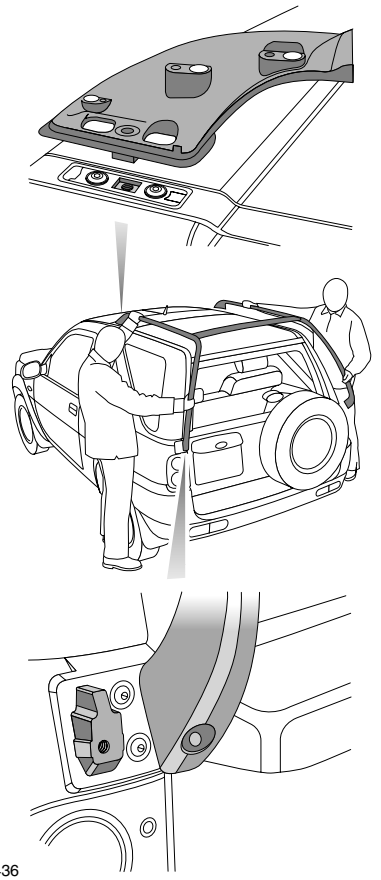

H3436

1. With assistance, carefully position the roof bars onto the vehicle.

WWW.MANUALS.WS

WWW.MANUALS.WS

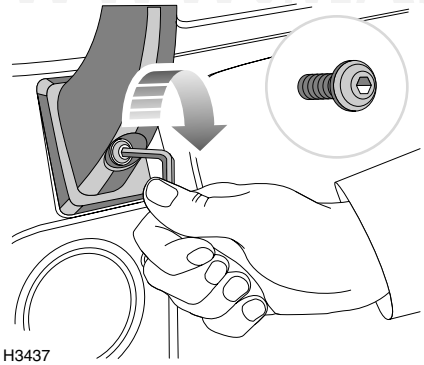

H3437

2. Screw the correct bolt into the rear fixing using a Torx key.

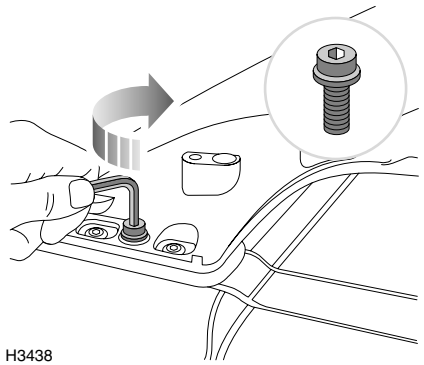

H3438

3. Screw the correct bolt into the front fixing.

NOTE: *Ensure that all front and rear fixing bolts are fully tightened and that the Roof bars are rigid.*

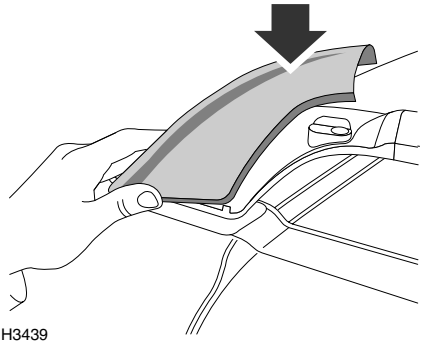

H3439

4. Align the pegs on the underside of the front finisher with the holes at the front of the roof bar and push down to fit.

WWW.MANUALS.WS

WWW.MANUALS.WS

LUGGAGE ANCHOR POINTS

Four fixing points are provided in the rear loadspace floor, to assist in safely securing large items of luggage. Land Rover provides a range of approved luggage retention accessories.

WARNING

DO NOT carry unsecured equipment, tools or luggage, which could move and cause personal injury in the event of an accident or emergency maneuver either on or off-road.

STOWAGE BOX

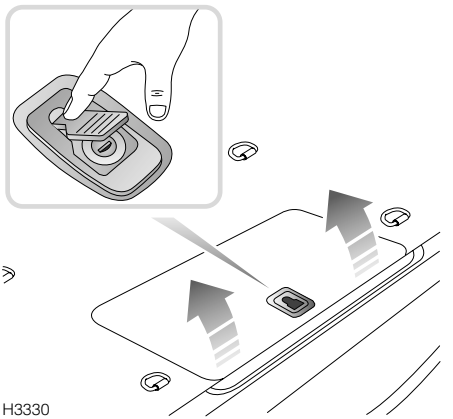

The stowage box, set into the loadspace floor, can be used to secure small or valuable items.

On some models, the box has a lockable lid.

To unlock: Press the flap (see inset) to access the lock. Insert the starter key and turn 90° clockwise. Lift the lid to open.

To lock: Turn the key anti-clockwise and remove the key.

On models without a lock, the stowage box lid is secured by turnbuckle fixings.

On some models, the stowage box houses the audio system subwoofer, in which case the stowage box should not be used to store other items.

CAUTION: If a subwoofer is fitted, take care to avoid knocking the underside of the subwoofer and disturbing the speaker harness and connection.

NOTE: *The stowage box may become hot when driving - do not store items in the stowage box, that could be damaged by heat.*

NOTE: *Do not store damp items in the stowage box for prolonged periods - condensation may cause mould to form.*

WWW.MANUALS.WS

WWW.MANUALS.WS

VEHICLE LOADING

H4011

When loading a vehicle to its maximum (gross vehicle weight), consideration must be given to the unladen vehicle weight and the distribution of the load, to ensure that axle loadings do not exceed the permitted maximum values.

It is your responsibility to limit the vehicle load in such a way that neither the maximum axle loads nor the gross vehicle weight are exceeded (see *'VEHICLE WEIGHTS', page 211*).

ROOF RACK*

Roof bars are available as an option.

The total roof rack load must NEVER exceed that given in *'TOWING WEIGHTS', page 212*.

WARNING

To avoid the risk of personal injury or even death, DO NOT permit children or any other person to travel on the roof rack while the vehicle is in motion.

A loaded roof rack can reduce the stability of the vehicle, particularly when cornering and encountering crosswinds.

IMPORTANT

- Only carry loads on the accessory cross-rails - do not attach loads directly onto the roof bars.
- It is recommended that Land Rover approved load carrying accessories are used, however, if it is necessary to attach a load directly to the accessory cross-rails, use webbing straps (preferably with a ratchet clamp) - do not use elastic or 'bungee' straps.
- All loads should be evenly distributed and secured within the periphery of a rack.
- Position the roof rack and load so that it does not impede the opening of the sunroof.
- If it is necessary to stow luggage on a roof rack while driving off-road, all loads MUST be removed before traversing side slopes.
- Check to ensure that roof rack and load are secure after 30 miles (50 km) of any journey.

WWW.MANUALS.WS

WWW.MANUALS.WS

TOW BARS

NOTE: *Only fit towing accessories that have been approved by Land Rover.*

TOWING A TRAILER

WARNING

In the interest of safety, the maximum permissible trailer weight, the maximum rear axle load, gross train and tongue weights must not be exceeded (see 'TOWING WEIGHTS', page 212).

The tongue weight plus the combined weight of the vehicle's load carrying area and rear seat passengers must never exceed the specified maximum rear axle load (see 'TOWING WEIGHTS', page 212).

DO NOT exceed the gross weight or axle loads stated on the certification label attached to the vehicle. Exceeding allowable vehicle and axle loads will increase the risk of tire or suspension failure, increase vehicle brake stopping distance, and adversely affect vehicle handling and stability which may result in a crash or rollover.

CAUTION: DO NOT use the rear lashing eyes or vehicle recovery towing eyes to tow a trailer - serious damage to the vehicle may result.

CAUTION: DO NOT carry unsecured equipment, tools or luggage, which could move and cause personal injury in the event of an accident or emergency maneuver, either on or off road.

It is the driver's responsibility to ensure that vehicle and trailer are loaded and balanced so that the combination is stable when in motion.

When preparing the vehicle for towing, pay careful attention to the trailer manufacturer's recommendations and also follow the guidelines below:

- Ensure that the vehicle's tire pressures are correct for towing and that the trailer tire pressures are as recommended by the trailer manufacturer.
- Check the operation of the trailer brakes and lights.
- For maximum stability, ensure that loads are properly secured and unable to shift position during transit. Also, position loads so that most of the weight is placed close to the floor and, where possible, immediately above or close to the trailer axle(s).
- After loading the trailer, check that the weight on the tow hitch point (this is also called the tongue weight), does not exceed 250 lb (113 kg).
- With the towing vehicle and trailer laden, it is essential that the trailer adopts a level aspect. In other words, the trailer must be level with the ground, with the towing hitch and trailer drawbar at the same height.
- Where the load can be divided between trailer and tow vehicle, loading more weight into the vehicle will generally improve the stability of the combination. However, you must ensure that the gross vehicle and maximum rear axle weights are not exceeded and that the trailer remains level.
- The vehicle's maximum rear axle and gross train weights must not be exceeded when the trailer is attached and both towing vehicle and trailer have been loaded.

WWW.MANUALS.WS

WWW.MANUALS.WS

NOTE: *It is the driver's responsibility to ensure that all regulations with regard to towing, are complied with according to the state in which the vehicle is being operated. All relevant information should be obtained from an appropriate motoring organisation or towing equipment retailer.*

NOTE: *The maximum permissible towed weights quoted in 'TOWING WEIGHTS', page 212, refer to the vehicles's design limitations and NOT to any specific territorial restriction.*

Trailer hitch

Maximum recommended drawbar length (A)

Maximum recommended drawbar rise (B)

Maximum recommended drawbar drop (C)

WARNING

If the maximum recommended drawbar length is exceeded, it may have an adverse effect on the vehicle handling whilst towing.

NOTE: *A drawbar of length 7.75 inches (197 mm) with a 0.625 inch (16 mm) rise is recommended for use with the Land Rover approved Class II towing hitch.*
(Please consult your local retailer for the latest information).

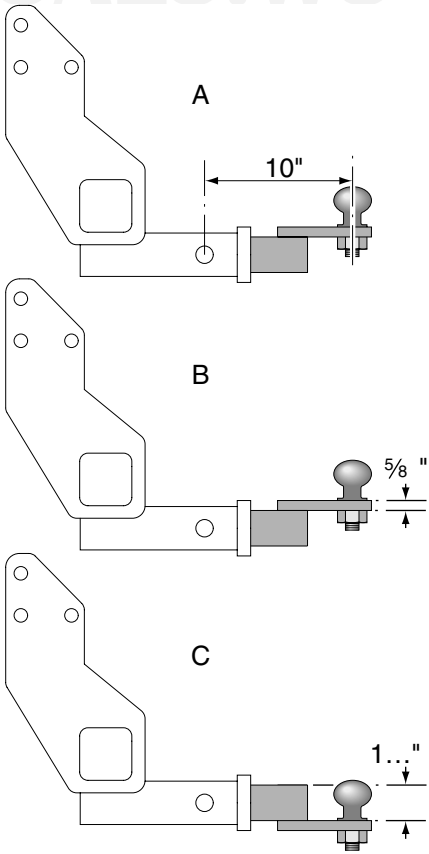

H4561

Towing on severe inclines at full capacity
The maximum permissible Gross Train Weight (GTW) is the maximum weight of vehicle, plus trailer (see *'TOWING WEIGHTS', page 212*). If a journey includes severe inclines, ensure that the grille and radiator are free from obstruction and that only high quality fuel is used. This enables the engine and the cooling system to operate more efficiently.

WWW.MANUALS.WS

WWW.MANUALS.WS

Correct gear selection will improve vehicle performance: select ‘D’ (Drive) and, where possible, maintain a speed that minimises automatic gear changes.

IMPORTANT

For all the towing conditions described, it is important that the following points are observed:

- All loads in the vehicle should be distributed as far forward as possible.
- The maximum Gross Vehicle Weight must not be exceeded, (see *‘TOWING WEIGHTS’, page 212*).
- The maximum individual axle weights must not be exceeded (see *‘TOWING WEIGHTS’, page 212*).
- Total trailer weight and tongue load can be measured with platform scales found at highway weighing stations, building companies, etc...

WARNING

The tongue weight plus the combined weight of the vehicle's load carrying area and rear seat passengers must never exceed the specified maximum rear axle load (see ‘TOWING WEIGHTS’, page 234).

WWW.MANUALS.WS

Off-Road Driving

WWW.MANUALS.WS

Off-Road Driving

BEFORE YOU DRIVE 131
BASIC OFF-ROAD TECHNIQUES 131
AFTER DRIVING OFF-ROAD. 133
SERVICING REQUIREMENTS. 133

Driving Techniques

DRIVING ON SOFT SURFACES & DRY SAND . . 134
DRIVING ON SLIPPERY SURFACES
(ice, snow, mud, wet grass). 134
CLIMBING STEEP SLOPES 135
DESCENDING STEEP SLOPES. 136
TRAVERSING A SLOPE 136
NEGOTIATING A ‘V’ SHAPED GULLY. 137
DRIVING IN EXISTING WHEEL TRACKS 137
CROSSING A RIDGE 137
CROSSING A DITCH 137
WADING 138

WWW.MANUALS.WS

WWW.MANUALS.WS

WWW.MANUALS.WS

WWW.MANUALS.WS

BEFORE YOU DRIVE

Before venturing off-road, it is **absolutely essential** that inexperienced drivers become fully familiar with the vehicle's controls and also study the off-road driving techniques described on the following pages.

WARNING

- ***Off-road driving can be hazardous! DO NOT take unnecessary risks.***
- ***Be prepared for emergencies at all times.***
- ***Your vehicle has higher ground clearance and hence a higher center of gravity than an ordinary passenger car. An abrupt maneuver at an inappropriate speed or on an unstable surface could cause the vehicle to go out of control or rollover.***
- ***Familiarise yourself with the recommended driving techniques in order to minimise risks to yourself, your vehicle AND your passengers.***
- ***Always ensure that seat belts are worn for personal protection in all off-road driving conditions.***
- ***DO NOT drive if the fuel level is low - undulating ground and steep inclines could cause fuel starvation to the engine and consequent damage to the catalytic converter.***
- ***DO NOT drive off-road alone or without letting someone know where you are going and when you plan to return.***

BASIC OFF-ROAD TECHNIQUES

These basic driving techniques are an introduction to the art of off-road driving and do not necessarily provide the information needed to successfully cope with every single off-road situation.

We strongly recommend that owners who intend to drive off-road frequently, should seek as much additional information and practical experience as possible.

Before driving off-road it is important that you check the condition of the wheels and tires and that the tire pressures are correct. Worn or incorrectly inflated tires will adversely affect the performance, stability and safety of the vehicle.

Gear selection

With the main selector lever set at ‘D’, the gearbox automatically provides the correct gear for the majority of off-road conditions. Remember that position ‘1’ will hold the gearbox in first gear to give maximum engine braking when required.

When descending very steep slopes, always select position ‘1’ and Hill Descent Control (HDC).

Braking

As far as possible, vehicle speed should be controlled through correct gear selection and the use of Hill Descent Control (HDC). Application of the brake pedal should be kept to a minimum. In fact, if the correct gear and HDC have been selected, braking will be largely unnecessary.

If the brake pedal is depressed when HDC is active, HDC is overridden and the brakes will perform as normal. If the brake pedal is then released, HDC will recommence operating, if necessary.

WWW.MANUALS.WS

WWW.MANUALS.WS

Hill descent control (HDC)
During a descent, if engine braking is insufficient to control the vehicle speed, HDC (if selected) automatically operates the brakes to slow the vehicle and maintain a speed relative to the accelerator pedal position

When driving off-road, HDC can be permanently engaged, to ensure that control is maintained whenever gear selector positions '1' or 'R' are selected. ABS and Traction control are still fully operational and will assist if the need arises.

Accelerating
Use the accelerator with care - any sudden surge of power may induce wheel spin and, therefore, invoke unnecessary operation of traction control, or in extreme conditions could lead to loss of control of the vehicle.

Steering

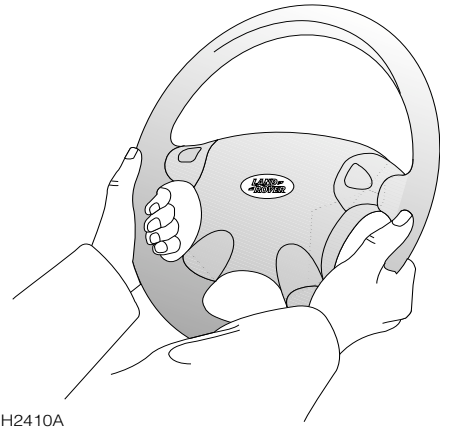

WARNING

DO NOT hold the steering wheel with your thumbs inside the rim - a sudden 'Kick' of the wheel as the vehicle negotiates a rut or boulder could seriously injure them. ALWAYS grip the wheel on the outside of the rim (as shown) when traversing uneven ground.

Survey the ground before driving
Before negotiating difficult terrain, it is wise to carry out a preliminary survey on foot. This will minimise the risk of your vehicle getting into difficulty through a previously unnoticed hazard.

WWW.MANUALS.WS

WWW.MANUALS.WS

Ground clearance
Don't forget to allow for ground clearance beneath the body and under the front and rear bumpers. Note that the suspension arms are situated below the body. Note also that there are other parts of the vehicle which may come into contact with the ground - take care not to ground the vehicle.

Ground clearance is particularly important at the bottom of steep slopes, or where wheel ruts are unusually deep and where sudden changes in the slope of the ground are experienced.

ALWAYS attempt to avoid obstacles that may foul the underside of the vehicle.

Loss of traction
If the vehicle is immobilised due to loss of tire grip, the following hints could be of value:

- Remove obstacles rather than forcing the vehicle to cross them.
- Clear clogged tire treads.
- Reverse as far as possible, then attempt an increased speed approach - additional momentum may overcome the obstacle.
- Brushwood, sacking or any similar material placed in front of the tires may improve tire grip.

CD Autochanger
Playing CDs while negotiating arduous off-road terrain is not recommended. Severe jolting of the vehicle may disturb the operation of the autochanger, causing the disc to ‘jump or skip’.

AFTER DRIVING OFF-ROAD

IMPORTANT

Before rejoining the public highway, or driving at speeds above 25 mph (40 km/h), consideration should be given to the following:

- Wheels and tires must be cleaned of mud and inspected for damage - ensure there are no lumps or bulges in the tires, or exposure of the ply or cord structure.
- If wheels and tires are not cleaned properly, damage to the wheels, tires, braking system and suspension components could occur.
- Brake discs and callipers should be examined and any stones or grit that may affect braking efficiency removed.
- The underside of the vehicle should be checked for damage, especially the suspension air springs and dampers.
- Any damage to paint or protective coatings, should be rectified by a Land Rover retailer as soon as possible.

SERVICING REQUIREMENTS

Vehicles operated in arduous conditions, particularly on dusty, muddy or wet terrain, and vehicles undergoing frequent or deep wading conditions will require more frequent servicing. See *‘OWNER MAINTENANCE’, page 166* and contact a Land Rover retailer for advice.

After wading in salt water or driving on sandy beaches, use a hose to wash the underbody components and any exposed body panels with fresh water. This will help to protect the vehicle's cosmetic appearance and help prevent corrosion.

WWW.MANUALS.WS

WWW.MANUALS.WS

DRIVING ON SOFT SURFACES & DRY SAND

The ideal technique for driving on soft sand requires the vehicle to be kept moving at all times - soft sand causes excessive drag on the wheels, resulting in a rapid loss of motion once driving momentum is lost. For this reason, gear changing should be avoided.

Select the highest suitable gear and REMAIN in that gear until a firm surface is reached.

Stopping the vehicle on soft ground, in sand or on an incline

If you do stop the vehicle, remember:

Starting on an incline or in soft ground or sand may be difficult. Always park on a firm level area, or with the vehicle facing downhill.

To avoid wheel spin, select ‘D’ (Drive) and use the MINIMUM throttle necessary to get the vehicle moving.

If forward motion is lost, avoid excessive use of the throttle - this will cause wheel spin and tend to dig the vehicle into the sand. Clear sand from around the tires and ensure that the body is not bearing on the sand before again attempting to move.

If the wheels have sunk, use an air bag lifting device or high lift jack to raise the vehicle, and then build up sand under the wheels so that the vehicle is again on level ground. If a restart is still not possible, place sand mats or ladders beneath the wheels.

DRIVING ON SLIPPERY SURFACES (ice, snow, mud, wet grass)

- Select ‘D’ (Drive) and drive away using the MINIMUM throttle possible.
- Drive slowly at all times, keeping braking to a minimum and avoiding violent movements of the steering wheel.

WWW.MANUALS.WS

WWW.MANUALS.WS

CLIMBING STEEP SLOPES

ALWAYS follow the fall line of the slope - travelling diagonally could encourage the vehicle to slide broadside down the slope.

Select gear selector position ‘1’ and engage hill descent control (HDC). If the surface is loose or slippery, use sufficient speed in the highest practical gear to take advantage of your vehicle's momentum. However, too high a speed over a bumpy surface may result in a wheel lifting, causing the vehicle to lose traction. In this case try a slower approach. Traction can also be improved by easing off the accelerator just before loss of forward motion.

If the vehicle is unable to complete a climb, do not attempt to turn it around while on the slope. Instead, adopt the following procedure to reverse downhill to the foot of the slope.

1. Hold the vehicle stationary using both foot and parking brakes.
2. Restart the engine if necessary.
3. Engage ‘R’ (Reverse).
4. Select hill descent control (HDC), if not already selected.
5. Release the parking brake. Then release the foot brake and allow the vehicle to reverse down the slope using engine braking and HDC to control the rate of descent.
6. Unless it is necessary to stop the vehicle to negotiate obstructions, DO NOT apply the brake pedal during the descent.
7. If the vehicle begins to slide, accelerate slightly to allow the tires to regain grip.

When the vehicle is back on level ground or where traction can be regained, a faster approach will probably enable the hill to be climbed. However, DO NOT take unnecessary risks, if the hill is too difficult to climb, find an alternative route.

WARNING

DO NOT attempt to reverse down a slope without the engine running, or HDC and the braking effect of the gearbox will be lost.

WWW.MANUALS.WS

WWW.MANUALS.WS

DESCENDING STEEP SLOPES

WARNING

Failure to follow these instructions may cause the vehicle to roll over.

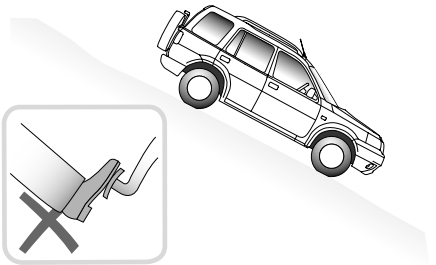

H3446

- Stop the vehicle at least a vehicle length before the start of the slope and engage gear selector position '1' and hill descent control (HDC).
- Unless it is necessary to stop the vehicle in order to negotiate obstructions, DO NOT touch the brake pedal during the descent - the engine and HDC will limit the speed, keeping the vehicle under perfect control provided the front wheels are rotating. If the vehicle begins to slide, the limits of adhesion have been reached, and it may be impossible to maintain the minimum speed relative to the gear selected. In this case, HDC may automatically accelerate the vehicle sufficient to maintain directional stability. DO NOT use the accelerator or the brakes or attempt to change gear. HDC will automatically slow the vehicle down again as soon as possible.
- Once level ground is reached, select a suitable gear range for the next stage of your journey.

TRAVERSING A SLOPE

WARNING

Failure to follow these instructions may cause the vehicle to roll over.

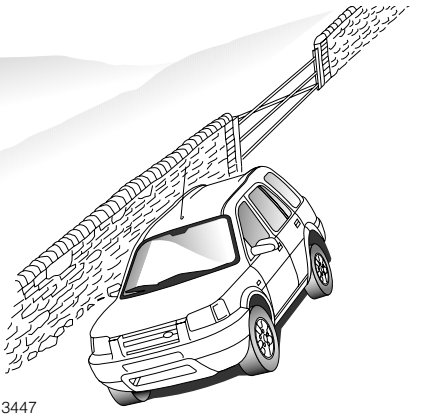

H3447

Before crossing a slope ALWAYS observe the following precautions:

- Check that the ground is firm and not slippery.
- Check that the wheels on the downhill side of the vehicle are not likely to drop into depressions in the ground and that the 'uphill' wheels will not run over rocks, tree roots, or similar obstacles that could suddenly increase the angle of tilt.
- Ensure that passenger weight is evenly distributed, that all roof rack luggage is removed and that all other luggage is properly secured and stowed as low as possible. Always remember; any sudden movement of the load could cause the vehicle to overturn.
- Rear seat passengers should sit on the uphill side of the vehicle or, in extreme conditions, should vacate the vehicle until the sloping ground has been safely negotiated.

WWW.MANUALS.WS

WWW.MANUALS.WS

NEGOTIATING A 'V' SHAPED GULLY

Observe extreme caution! Steering up either of the gully walls could cause the side of the vehicle to be trapped against the opposite gully wall.

DRIVING IN EXISTING WHEEL TRACKS

As far as possible allow the vehicle to steer itself along the bottom of the ruts. However, always keep a light hold of the steering wheel to prevent it from spinning free.

Particularly in wet conditions, if the steering wheel is allowed to spin free, the vehicle may appear to be driving straight ahead in the ruts, but in actual fact (due to the lack of traction caused by the wet ground) is unknowingly on full right or left lock. Then, when level ground is reached, or if a dry patch of ground is encountered, the wheels will find traction and cause the vehicle to suddenly veer to left or right.

CROSSING A RIDGE

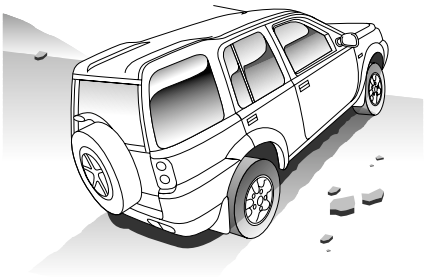

H3448

Approach at right angles so that both front wheels cross the ridge together - an angled approach could cause diagonally opposite wheels lifting from the ground at the same time.

CROSSING A DITCH

H3449

Cross ditches at an angle so that three wheels always maintain contact with the ground. If a ditch is approached head on, both front wheels will drop into the ditch together, possibly resulting in the body and front bumper being trapped on opposite sides of the ditch.

WWW.MANUALS.WS

WWW.MANUALS.WS

WADING

CAUTION: The maximum advisable wading depth is 16 inches (0,4 m).

CAUTION: Severe electrical damage may occur if the vehicle remains stationary for any length of time when the water level is above the door sills.

If the depth of water is likely to exceed 16 inches (0,4 m), the following precautions should be observed:

- Fix a plastic sheet in front of the radiator grille to prevent water from soaking the engine and mud from blocking the radiator.
- Ensure that the silt bed beneath the water is free of obstacles and firm enough to support the vehicle's weight and provide sufficient traction.
- Ensure that the engine air intake is clear of the water level.
- Select a low gear and maintain sufficient throttle to prevent the engine from stalling. This is particularly important if the exhaust pipe is under water.
- Drive slowly into the water and accelerate to a speed which causes a bow wave to form; then maintain that speed.

At all times, keep all the doors fully closed.

After wading

- Immediately after wading, remove any protective covering from in front of the radiator grille.
- DO NOT rely on the parking brake to hold the vehicle stationary until the brakes are thoroughly dried out; in the meantime, leave the vehicle parked with the gear selector in ‘P’ (Park).
- Drive the vehicle a short distance and apply the foot brake to check that the brakes are fully effective.
- If the water was particularly muddy, remove any blockages (mud and leaves) from the radiator to reduce the risk of overheating.
- If deep water is regularly negotiated, check all oils for signs of water contamination - contaminated oil can be identified through its ‘milky’ appearance. In addition, check the air filter element for water ingress and replace if wet - consult a Land Rover retailer if necessary.
- If salt water is frequently negotiated, thoroughly wash the underbody components and exposed body panels with fresh water.

NOTE: *Vehicles required to undergo frequent or deep wading conditions will require more frequent servicing. Contact a Land Rover retailer for advice.*

WWW.MANUALS.WS

On-Road Driving

WWW.MANUALS.WS

On-Road Driving

INSTRUMENTS AND WARNING LIGHTS 141
POWER ASSISTED STEERING 141
WARMING UP 141
VEHICLE HEIGHT 141
DRIVING PRECAUTIONS 142
FUEL ECONOMY 143
BREAKDOWN SAFETY 143

WWW.MANUALS.WS

WWW.MANUALS.WS

WWW.MANUALS.WS

WWW.MANUALS.WS

INSTRUMENTS AND WARNING LIGHTS

Before driving it is important to fully understand the function of the instruments and warning lights.

NOTE: *Red warning lights are of particular importance, illumination indicating that a fault exists. If a red light illuminates, always stop the vehicle and seek qualified assistance before continuing.*

POWER ASSISTED STEERING

The hydraulic power-assisted steering is progressively geared; when steering straight ahead gearing is relatively low, but becomes progressively higher as the steering wheel is turned.

NOTE: *Power assistance is dependent on the engine running. If the engine is not running, a much greater effort will be required to steer the vehicle.*

WARMING UP

In the interests of fuel economy, it is advisable to drive the vehicle straight away, remembering that harsh acceleration or labouring the engine before the normal operating temperature has been reached can damage the engine.

When the engine is cold, engine idle speeds will be faster than normal. Under these circumstances, use the foot brake to control the vehicle until the engine is warm and running at normal speed, and be aware of the need to take additional care when manoeuvring the vehicle.

VEHICLE HEIGHT

CAUTION: The overall height of your vehicle exceeds that of ordinary passenger cars. Always be aware of the height of your vehicle and check the available headroom before driving through low entrances. This is particularly important if the vehicle is fitted with a roof rack or if a sunroof is open.

WWW.MANUALS.WS

DRIVING PRECAUTIONS

WARNING

Utility vehicles have a significantly higher roll-over rate than other types of vehicles. Since these vehicles are designed to be operated off-road, these vehicles have a higher ground clearance and hence a higher center of gravity. Such a feature has been associated with an increased risk of vehicle roll-over. An advantage associated with higher ground clearance vehicles is a better view of the road, allowing the driver to anticipate problems. Another factor shown to significantly increase roll-over risk is unauthorized vehicle modifications such as fitting incorrect specification tires (see 'WHEELS & TIRES', page 208), oversize tires, body lifting, incorrect springs/dampers, incorrect vehicle loading/trailer towing.

However, on-road crash data also indicates that driver behaviour is a greater factor than a high center of gravity in determining a vehicle's overall roll-over rate. The single most effective driver behaviour that can reduce the risk of injury or death in all crashes including roll-over, is to ALWAYS WEAR YOUR SEAT BELT and to properly restrain all child passengers in an appropriate child safety seat. In a roll-over crash, an unbelted person is significantly more likely to die than a person wearing a seat belt.

Other measures that can reduce the risk of injury and death from vehicle crashes and roll-over are:

- Limit speed. Posted speed limits should never be exceeded, and you should always drive below these limits whenever traffic, weather, road or other conditions dictate. Always use your common sense and good judgement.
- Take curves at reasonable speeds avoiding unnecessary braking.
- Drive defensively. Be aware of traffic, road and weather conditions. Avoid risk taking behaviour such as following too close, rapid lane changing or abrupt maneuvers.
- Assume that pedestrians or other drivers are going to make mistakes. Anticipate what they might do. Be ready for their mistakes.
- Avoid distractions such as cellular phone calling, reading, eating, drinking or reaching for items on the floor.
- Before changing lanes, check your mirrors and flash your turn signal lights.
- Always leave room for unexpected events such as sudden braking.
- Never operate your vehicle when you have consumed alcohol, are sleepy or fatigued or have taken any medications that affect judgement, reflexes or alertness.
- Many vehicle rollovers occur when a driver attempts to bring a vehicle back onto the road after some or all of the wheels drift onto the shoulder of the road, especially when the shoulder is unpaved. If you find yourself in such a situation, do not initiate any sharp or abrupt steering and/or braking maneuvers to re-enter the roadway. Instead, let the vehicle slow down as much as is safely possible before attempting to re-enter the roadway and keep your wheels as straight as possible while re-entering the roadway.

WWW.MANUALS.WS

WWW.MANUALS.WS

FUEL ECONOMY

Fuel consumption is influenced by two major factors:

- How your vehicle is maintained.
- How you drive your vehicle.

To obtain optimum fuel economy, it is essential that your vehicle is maintained in accordance with the manufacturer's service schedule.

Items such as the condition of the air cleaner element, tire pressures and wheel alignment will have a significant effect on fuel consumption. But, above all, the way in which you drive is most important. The following hints may help you to obtain better value from your motoring:

- Avoid unnecessary, short, start-stop journeys.
- Avoid fast starts by accelerating gently and smoothly from rest.
- Do not drive in the lower gears for longer than necessary.
- Decelerate gently and avoid sudden and heavy braking.
- Anticipate obstructions and adjust your speed accordingly well in advance.
- When stationary in traffic, select neutral to improve fuel economy and air conditioning performance.

BREAKDOWN SAFETY

IMPORTANT INFORMATION

Remember the breakdown safety code

If a breakdown occurs while travelling:

- Wherever possible, consistent with road safety and traffic conditions, the vehicle should be moved off the main thoroughfare, preferably onto the shoulder as far as possible. If a breakdown occurs on a freeway, pull well over to the inside of the hard shoulder.
- Switch on hazard lights.
- If possible, position a warning triangle or a flashing amber light at an appropriate distance from the vehicle to warn other traffic of the breakdown, (note the legal requirements of some countries).
- Consider evacuating passengers through the doors facing away from traffic, to a safe area away from the vehicle, as a precaution in case your Freelander is accidentally struck by another vehicle.

WWW.MANUALS.WS

WWW.MANUALS.WS

WWW.MANUALS.WS

Owner Maintenance

WWW.MANUALS.WS

Maintenance
ROUTINE MAINTENANCE 147
OWNER MAINTENANCE. 148
SAFETY IN THE GARAGE 149
EMISSION CONTROL. 150
ROAD TESTING DYNAMOMETERS
(‘rolling roads’) 150

Hood Opening
OPENING THE HOOD 151

Engine Compartment
2.5 GASOLINE ENGINE 152

Engine Oil
ENGINE OIL 153
DRAIN & REFILL 154

Air Cleaner
AIR CLEANER ELEMENT RENEWAL 156

Spark Plugs
SPARK PLUG REMOVE & REFIT 157

Cooling System
COOLANT CHECK & TOP-UP 158
ANTI-FREEZE 159

Brakes
BRAKE FLUID. 160

Power Steering
POWER STEERING FLUID 161

Washers
WINDSHIELD WASHERS 162

Wiper Blades
WIPER BLADE REPLACEMENT 164

Battery
BATTERY SAFETY 165
BATTERY MAINTENANCE 165
THE EFFECTS OF BATTERY DISCONNECTION . . 168

Tires
CARING FOR YOUR TIRES. 169
UNIFORM TIRE QUALITY GRADING 171
SNOW CHAINS 172

WWW.MANUALS.WS

WWW.MANUALS.WS

Cleaning & Vehicle Care

WASHING YOUR VEHICLE 173
CLEANING THE INTERIOR 175

Identification Numbers

CONTACTING YOUR RETAILER 176
IDENTIFICATION NUMBER LOCATIONS 176
VEHICLE IDENTIFICATION NUMBER 176

Parts & Accessories

PARTS AND ACCESSORIES 177

WWW.MANUALS.WS

WWW.MANUALS.WS

ROUTINE MAINTENANCE

Regular systematic maintenance is the key to ensuring the continued reliability and efficiency of your vehicle.

Maintenance is the owner's responsibility and it is essential that all routine services, as well as the owner maintenance operations, brake fluid and coolant changes, are carried out when required and according to the manufacturer's recommendations.

The routine maintenance requirements for your vehicle are shown in the separate Passport to Service book. Most of the necessary workshop maintenance requires specialised knowledge and equipment, and should preferably be entrusted to a Land Rover retailer.

Passport to Service

The Passport to Service book includes a Service Record section, which enables a record to be kept of all services that are carried out on the vehicle. This section of the book also provides a facility for the retailer to record brake fluid and camshaft drive belt changes, as well as the fitting of replacement airbag modules.

Ensure your retailer signs and stamps the book after each service.

Brake fluid and coolant replacement

The brake fluid and engine coolant (anti-freeze and water solution) needs to be replaced every 36,000 miles (60,000 km) or 36 months, whichever is the sooner. Your retailer will replace the brake fluid and coolant at the scheduled services.

WWW.MANUALS.WS

WWW.MANUALS.WS

OWNER MAINTENANCE

In addition to the routine services which should be carried out by your Land Rover retailer at the intervals shown in the Passport to Service, a number of simple checks (listed below) must be carried out by the owner or driver on a regular basis. These are fully described on the pages that follow.

WARNING

If brake pedal travel is unusually long or if there is any significant loss of brake fluid, contact your retailer immediately. Driving under such conditions could result in extended stopping distances or complete brake failure.

Daily checks

- Operation of inertia reel seat belts.
- Operation of parking brake and foot brake.
- Operation of lights, horn, direction indicators, wipers, washers and warning lights.
- Look for fluid deposits underneath the vehicle that might indicate a leak.

Weekly checks (or at least every 250 miles/400 km)

- Engine oil level.

  NOTE: *The engine oil level should be checked more frequently if the vehicle is driven for prolonged periods at high speeds.*
- Windshield washer fluid level.
- Brake fluid level.
- Power steering fluid level.
- Tire pressures and condition.
- Operate the air conditioning.

Driving in arduous conditions

IMPORTANT INFORMATION

Special operation conditions

When a vehicle is operated in extremely arduous conditions, more frequent attention must be paid to servicing requirements.

For example: if your vehicle experiences deep wading conditions, even DAILY servicing could be necessary to ensure the continued safe and reliable operation of the vehicle.

Arduous driving conditions include:

- Repeated short distance driving (e.g. up to 6 miles (10 km), stop-start driving or idling for long periods.
- Driving in dusty and/or sandy conditions.
- Driving on rough and/or muddy roads and/or wading.
- Driving in extremely hot conditions.
- Towing a trailer or driving in mountainous conditions.

Contact a Land Rover retailer for advice.

WWW.MANUALS.WS

WWW.MANUALS.WS

SAFETY IN THE GARAGE

WARNING

Cooling fans may continue to operate after the engine is switched off. When the engine is hot, the cooling fans may also COMMENCE operating after the engine is switched off and continue operating for up to 10 minutes. To avoid injury, keep clear of all fans and remove any loose clothing while working in the engine compartment.

Whenever you need to carry out maintenance on your vehicle, observe the following safety precautions at all times:

- ***Keep your hands, hair, tools and clothing away from drive belts and pulleys.***
- ***If the vehicle has been driven recently, DO NOT TOUCH exhaust and cooling system components until the engine has cooled.***
- ***DO NOT TOUCH electrical leads or components while the engine is running, or with the starter switch turned on.***
- ***NEVER leave the engine running in an unventilated area - exhaust gases are poisonous and extremely dangerous.***
- ***DO NOT work beneath the vehicle with the wheel changing jack as the only means of support.***
- ***Ensure sparks and naked lights are kept away from the engine compartment.***
- ***Wear protective clothing, including, where practicable, gloves made from an impervious material.***
- ***Remove metal wrist bands and jewellery before working in the engine compartment.***
- ***DO NOT allow tools or metal parts of the vehicle to make contact with the battery leads or terminals.***

WARNING

Under no circumstances should any part of the fuel system be dismantled or replaced by anyone other than a suitably qualified motor vehicle technician. Failure to comply with this instruction may result in fuel spillage with a consequent serious risk of fire.

Poisonous fluids

Fluids used in motor vehicles are poisonous and should not be consumed or brought into contact with open wounds. These include battery acid, anti-freeze, brake and power steering fluid, petrol, engine oil and windscreen washer additives.

For your own safety, ALWAYS read and obey all instructions printed on labels and containers.

Used engine oil

Prolonged contact with engine oil may cause serious skin disorders, including dermatitis and cancer of the skin. ALWAYS wash thoroughly after contact.

It is illegal to pollute drains, water courses or soil with toxic chemicals such as used engine oil. Use authorised waste disposal sites to dispose of used oil and toxic chemicals.

WWW.MANUALS.WS

WWW.MANUALS.WS

EMISSION CONTROL

Your vehicle is fitted with various items of emission and evaporative control equipment designed to meet specific territorial requirements. You should be aware that unauthorised replacement, modification or tampering with this equipment by an owner or repair shop may be unlawful and subject to legal penalties.

In addition, engine settings must not be tampered with. These have been established to ensure that your vehicle complies with stringent exhaust emission regulations. Incorrect engine settings may adversely affect exhaust emissions, engine performance and fuel consumption, as well as causing high temperatures, which will result in damage to the catalytic converter and the vehicle.

Whilst Land Rover North America Inc. maintains that an authorised Land Rover retailer is best equipped to carry out repairs and maintenance on the emission control system, such work may be carried out by any competent automotive repair shop, or individual, using certified parts.

WARNING

Under no circumstances should any part of the fuel system be dismantled or replaced by anyone other than a suitably qualified motor vehicle technician. Failure to comply with this instruction may result in fuel spillage with a consequent serious risk of fire.

ROAD TESTING DYNAMOMETERS ('rolling roads')

Because your vehicle is equipped with anti-lock brakes and permanent four-wheel drive, it is essential that any dynamometer testing is carried out ONLY by a qualified person familiar with the appropriate testing and safety procedures, and ONLY on a four-wheel drive dynamometer. Contact your Land Rover retailer for further information.

WWW.MANUALS.WS

WWW.MANUALS.WS

OPENING THE HOOD

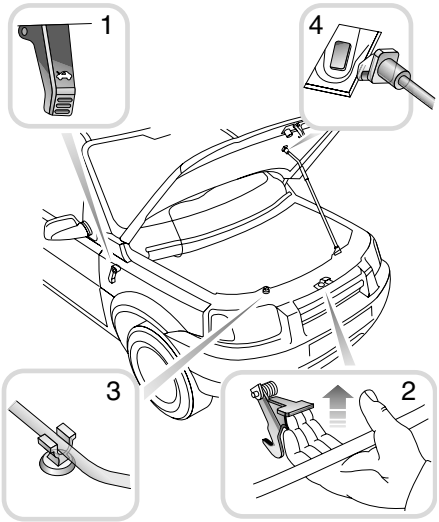

H3450

1. From inside the vehicle on the right hand side, pull the hood release handle (see illustration).
2. Lift the safety catch lever and raise the hood.
3. Unclip the hood support stay.
4. Fit the support stay into the cut-out in the underside of the hood.

Closing the hood

WARNING

To avoid the hood opening at speed, DO NOT drive with the hood retained by the safety catch alone.

Replace the support stay in its retaining clip, then lower the hood, allowing it to drop for the last 12 inches (30 cm) approx.

After closing, check that the lock is fully engaged by attempting to lift the front edge of the hood. This should be free from all movement.

WWW.MANUALS.WS

WWW.MANUALS.WS

2.5 GASOLINE ENGINE

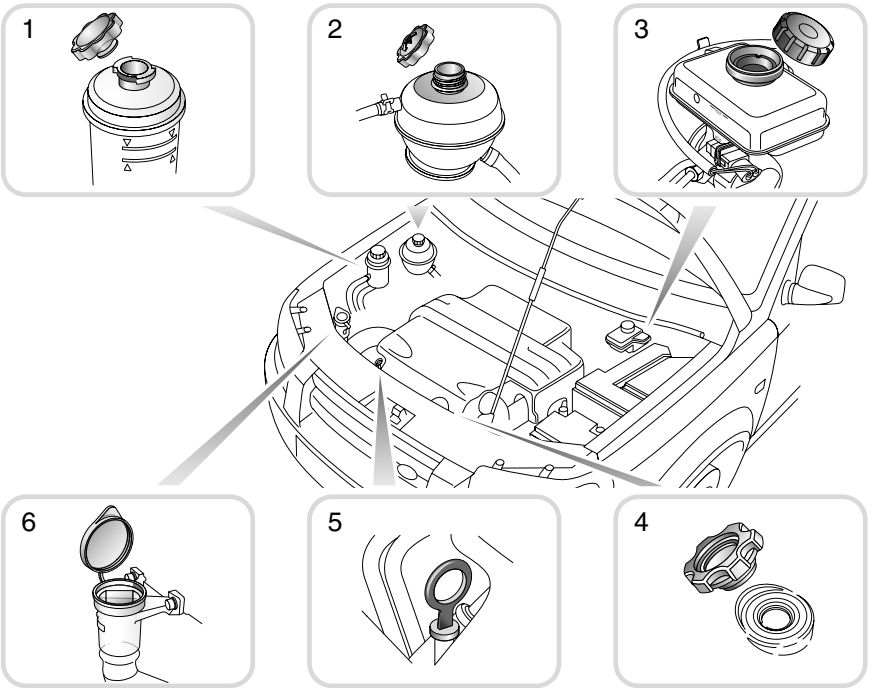

H3515A

1. Power steering reservoir.
2. Cooling system reservoir.
3. Brake fluid reservoir.
4. Engine oil filler cap.
5. Engine oil dipstick.
6. Washer reservoir.

WARNING

To reduce the risk of serious injury or death, while working in the engine compartment, ALWAYS observe the safety precautions listed under 'SAFETY IN THE GARAGE', page 149.

WWW.MANUALS.WS

WWW.MANUALS.WS

ENGINE OIL

Check the oil level weekly, or every 250 miles (400 km). Ideally the oil level should be checked with the engine cold and the vehicle resting on level ground. If the engine is already warm, then wait for at least two minutes after switching off before checking the level.

NOTE: *Check the engine oil more frequently if the vehicle is driven at high speeds for prolonged periods.*

Oil specification

Use only an approved full synthetic engine oil. For approved brands, see *'ENGINES', page 207*.

NOTE: *Mixing additives with the engine oil is not recommended and could damage the engine.*

It is essential to use an oil suitable for the climatic conditions in which the vehicle is to be operated. Oils manufactured to the above specification are suitable for use in temperatures between -4°F to 86°F (-20°C to +30°C). If the ambient temperature falls outside these limits, seek advice from your retailer.

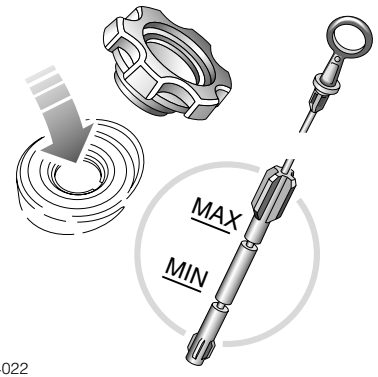

H4022

Oil level check & top-up

WARNING

Take care to avoid spilling engine oil onto a hot engine - a fire may result! Wipe up any spillage immediately.

1. Withdraw the dipstick and wipe the blade clean.
2. Slowly insert the dipstick and withdraw again to check the level, which should NEVER be allowed to fall below the lower mark on the dipstick.
3. To top-up, remove the oil filler cap and add oil to maintain a level between the upper and lower marks on the dipstick. As a general guide, if the level on the dipstick is:
   - nearer to the upper mark than the lower, add no oil.
   - nearer to the lower mark than the upper, add 0.5 US quart (0.5 liter) of oil.
   - at or below the lower mark, add 1 US quart (1 liter) of oil.
4. Wait for five minutes and then recheck the level, adding more oil if necessary - DO NOT OVERFILL!
5. Finally, ensure the dipstick and filler cap are replaced.

CAUTION: Driving the vehicle with the engine oil level ABOVE the upper mark, or BELOW the lower mark on the dipstick, can damage the engine.

NOTE: *If oil consumption seems excessive, check the system for leaks and contact your retailer.*

WWW.MANUALS.WS

WWW.MANUALS.WS

DRAIN & REFILL

Ensure the engine oil is changed at the recommended service intervals as specified in the Passport to Service book.

NOTE: *Under severe operating conditions (i.e. regular use in muddy terrain or dusty conditions), the engine oil must be changed more frequently, even to the extent of a daily change. Consult your Land Rover retailer for guidance.*

Used engine oil

WARNING

Prolonged contact with used engine oil can cause serious skin disorders, including dermatitis and cancer of the skin. Wear protective clothing if possible and ALWAYS wash thoroughly after contact.

It is illegal to pollute drains, water courses or soil with toxic chemicals such as used engine oil. Use authorised waste disposal sites to dispose of used oil and toxic chemicals.

Removing the underbelly panel

Before it is possible to drain the engine oil and/or replace the oil filter, the underbelly panel beneath the engine must be removed.

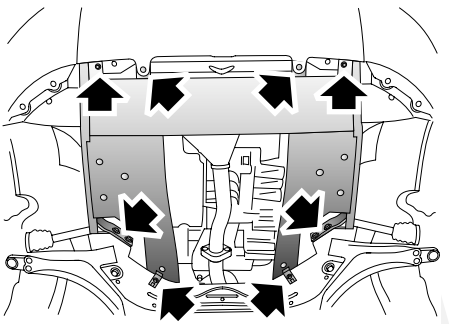

H4323

The underbelly panel is held in position by 14 screws and bolts. These are best removed in the following order:

1. Remove the 2 screws securing bumper valance to underbelly panel brackets.
2. Remove the 4 screws securing wheel arch liners to bumper valance.
3. Remove the 2 bolts securing the rear of the underbelly panel.
4. Remove the 6 bolts securing the underbelly panel frame.

Drain

With the engine warm (to assist oil drainage) and the vehicle parked on firm, level ground, remove the filler cap and position a container of suitable size (at least 5.5 US quarts or 5.2 liters) under the drain plug, in the bottom of the sump.

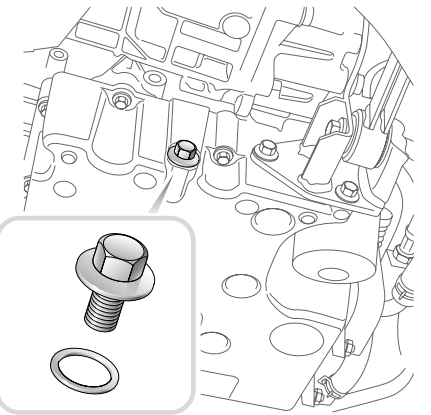

H4242

Remove the drain plug and sealing washer and allow the engine oil to drain into the container.

WARNING

Oil from the engine can be very hot, to avoid harmful burns, take care when removing the drain plug.

MANUALS.WS

WWW.MANUALS.WS

Refill

Clean the oil drain plug and its mating surface on the engine sump. Fit the drain plug, complete with a new sealing washer and tighten to 18 lbf.ft (25 Nm).

Refill the engine with fresh oil, suitable for the climatic conditions in which the vehicle is to be operated and confirming strictly to the specification, see *'CAPACITIES', page 210*.

DO NOT overfill the engine! Remember that a little oil will always remain in the engine after draining and that, therefore, the quantity of oil required to refill the engine will be slightly less than the full capacity quoted, see *'CAPACITIES', page 210*.

After filling, allow a few minutes to elapse before checking the level on the dipstick (this will allow all the oil to drain into the sump and enable a true reading to be obtained). Once the correct level of oil is shown on the dipstick, replace the filler cap.

Start and run the engine. Do not rev the engine until the oil pressure warning light extinguishes. Check for oil leaks around the drain plug.

Stop the engine, wait a few minutes, then check the oil level and top up if necessary.

Finally, replace the underbelly panel.

OIL FILTER RENEWAL

It is assumed that oil filter renewal will take place at the same time as oil drain and refill and that the underbelly panel will, therefore, already have been removed.

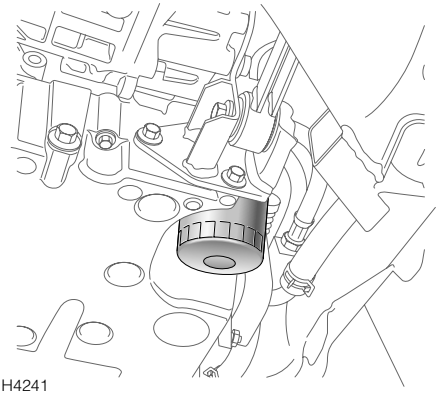

H4241

1. Clean the area around the filter head and place a suitable container beneath the engine.
2. Using a strap wrench, or similar tool, unscrew the filter anti-clockwise and discard it.
3. Smear the seal of the new filter with clean engine oil.
4. Fit the new filter and tighten clockwise until the bowl seats, then tighten a further half turn. Use hand force only, DO NOT overtighten.
5. Start and run the engine. Do not rev the engine until the oil pressure warning light extinguishes. Check for oil leaks around the filter and drain plug.
6. Stop the engine, wait a few minutes, then check the oil level and top up if necessary.

WWW.MANUALS.WS

WWW.MANUALS.WS

AIR CLEANER ELEMENT RENEWAL

Renewing the air cleaner element at the recommended service intervals (see your 'Passport to Service book'), is extremely important. However, to maintain optimum engine performance under dusty operating conditions, more frequent renewal will be necessary. Consult your Land Rover retailer for guidance.

Removing the engine cover

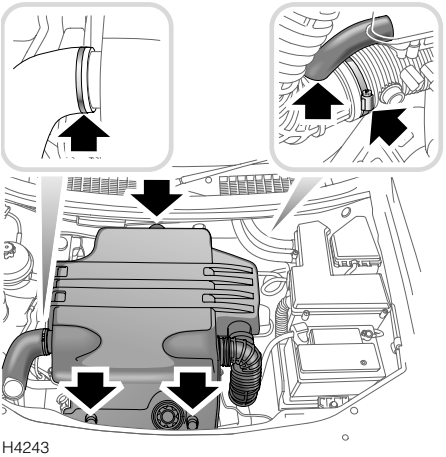

H4243

1. Loosen the clip and disconnect the fresh air intake hose from the side of the engine cover (see left inset to illustration).
2. Loosen the clip and disconnect the air intake and bypass hose from the throttle body (see right inset to illustration).
3. Release the two turnbuckle fastenings that secure the front of the engine cover (arrowed in main illustration).
4. Release the retaining strap at the rear of the engine cover and remove the cover.

Renewing the air cleaner element

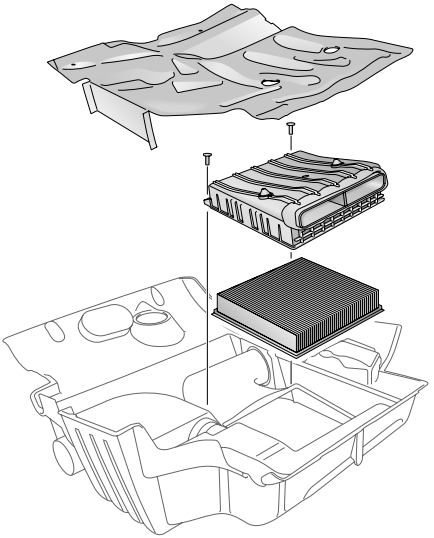

H4246

With the engine cover turned upside down, remove the screws securing the heat shield to the underside of the engine cover. This will provide access to the air cleaner cartridge.

Remove the two screws securing the air cleaner cartridge to the engine cover, then release the cartridge and remove the air cleaner element.

Before fitting a new element, clean the inside of the air cleaner cartridge.

IMPORTANT INFORMATION
Always fit a NEW element; under no circumstances should a contaminated element be cleaned and used again.

WWW.MANUALS.WS

WWW.MANUALS.WS

SPARK PLUG REMOVE & REFIT

Spark plug removal

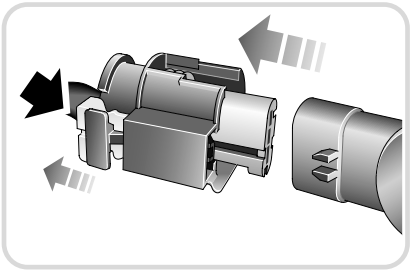

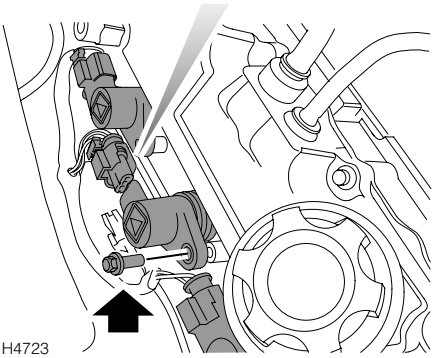

H4723

1. Disconnect the battery earth cable.
2. Remove the engine acoustic cover (see *'Removing the engine cover', page 156*).
3. Carefully noting the relative fitting positions, release the locking clips and disconnect the multiplugs from the plug top coils.
4. Remove the six bolts securing the plug top coils to the camshaft cover and remove the coils.
5. Use a suitable spark plug wrench to remove the plugs from both cylinder heads.

Refitting the plugs

When refitting, take care not to cross-thread the spark plugs, otherwise costly damage to the cylinder head will result.

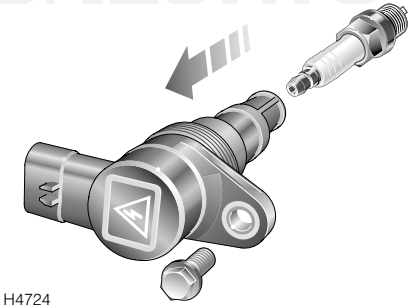

H4724

Fit only plugs of the type recommended by Land Rover (see *'ENGINES', page 207*) and tighten to a torque of 18 lbf.ft (25 Nm). Please note that fitting incorrect grades of plug may lead to engine failure and serious damage.

Refitting the high tension (H.T.) leads

1. Connect the plug leads, ensuring that they are replaced in the correct relationship to each other. Failure to maintain the correct plug lead connections, will result in a misfire and possible damage to the catalytic converter.
2. Refit the plug top coils to the spark plugs.
3. Refit the bolts securing the plug top coils to the camshaft covers and tighten to 6.5 lbf.ft (9 Nm).
4. Reconnect the multiplugs to the plug top coils and secure with the locking clips.
5. Refit the engine cover and then the battery earth cable.

CAUTION: To ensure the correct firing order (1, 6, 5, 4, 3, 2), the high tension leads must be replaced in the correct relationship to each other.

WWW.MANUALS.WS

WWW.MANUALS.WS

COOLANT CHECK & TOP-UP

WARNING

NEVER remove the filler cap when the engine is hot - escaping steam or scalding water could cause serious personal injury.

Unscrew the filler cap slowly, allowing the pressure to escape before removing completely.

Avoid spilling anti-freeze onto a hot engine - a fire may result.

CAUTION: DO NOT overfill the reservoir and NEVER run the engine without coolant.

The coolant level in the expansion tank should be checked at least weekly (more frequently in high mileage or arduous operating conditions). Always check the level WHEN THE SYSTEM IS COLD and with the vehicle resting on level ground.

If it is necessary to remove the filler cap before the system has fully cooled, loosen the cap slowly, allowing the air pressure to escape gradually.

Top-up with a 50% mixture of anti-freeze and water (see *'Coolant specification', page 159*) so that the surface of the coolant is level with the 'MAX' indicator on the side of the tank.

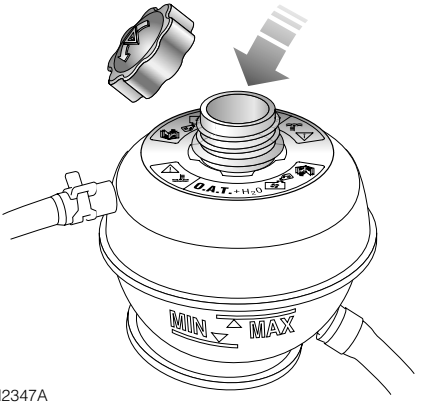

H2347A

CAUTION: DO NOT add rust inhibitors or other additives to the coolant - these may not be compatible with the coolant or engine components.

CAUTION: Anti-freeze will damage painted surfaces: Soak up any spillage with an absorbent cloth immediately and wash the area with a mixture of car shampoo and water.

CAUTION: Never top up with salt water. Even when travelling in territories where the water supply contains salt, always carry a supply of fresh (rain or distilled) water.

If the coolant level has fallen appreciably, suspect leakage or overheating and arrange for your retailer to examine the vehicle.

If the cooling system is to be topped-up before the vehicle is to be left undriven over the winter, mix the anti-freeze and water together thoroughly BEFORE adding it to the cooling system.

Ensure the cap is tightened fully after top-up is completed.

WWW.MANUALS.WS

WWW.MANUALS.WS

ANTI-FREEZE

WARNING

Anti-freeze is poisonous and can be fatal if swallowed - keep containers sealed and out of the reach of children. If accidental consumption is suspected, seek medical attention immediately.

Prevent anti-freeze coming in contact with the skin or eyes. If this occurs, rinse immediately with plenty of water.

Anti-freeze contains important corrosion inhibitors. The anti-freeze content of the coolant must be maintained at 50% ± 5% all year round (not just in cold conditions). To ensure that the anti-corrosion properties of the coolant are retained, the anti-freeze content should be checked once a year (regardless of mileage) and completely renewed every 3 years or 36,000 miles (60,000 km), whichever is the sooner. Failure to do so may cause corrosion of the radiator and engine components.

The specific gravity of a 50% anti-freeze solution at 68°F (20°C) is 1.075 and protects against frost down to -33°F (-36°C).

Coolant specification

Use ONLY Havolene Extended Life Coolant (XLC) or any ethylene glycol anti-freeze (containing no methanol) with only Organic Acid Technology (OAT) corrosion inhibitors.

In an emergency - and only if this type of anti-freeze is unavailable - top-up the cooling system with clean water, but be aware of the resultant reduction in frost protection. DO NOT top-up or refill with conventional anti-freeze formulations. If in doubt consult a Land Rover retailer.

WWW.MANUALS.WS

WWW.MANUALS.WS

BRAKE FLUID

WARNING

DO NOT drive if the reservoir fluid level is below the minimum mark.

Contact your retailer immediately if brake pedal travel is unusually long or if there is any appreciable drop in brake fluid level.

Brake fluid is highly toxic and could be fatal if swallowed - keep containers sealed and out of the reach of children. If accidental consumption of fluid is suspected, seek medical attention immediately.

If brake fluid should come into contact with the skin or eyes, rinse immediately with plenty of water.

Take care not to spill fluid onto a hot engine - a fire may result. Wipe up any spillage immediately.

CAUTION: Brake fluid will damage painted surfaces: Soak up any spillage with an absorbent cloth immediately and wash the area with a mixture of car shampoo and water.

IMPORTANT
Brake fluid must be completely renewed every 36,000 miles (60,000 km) or 36 months, whichever is the sooner.

Check

The fluid level may fall slightly during normal use as a result of brake pad wear but should not be allowed to fall below the 'MIN' mark. If there is any appreciable drop in level over a short period, consult your retailer. **DO NOT drive if the fluid level is below the minimum mark on the reservoir.**

With the vehicle on level ground, check the fluid level at least every week (more frequently in high mileage or arduous operating conditions). Check the level visually through the side of the transparent reservoir without removing the cap.

Top-up

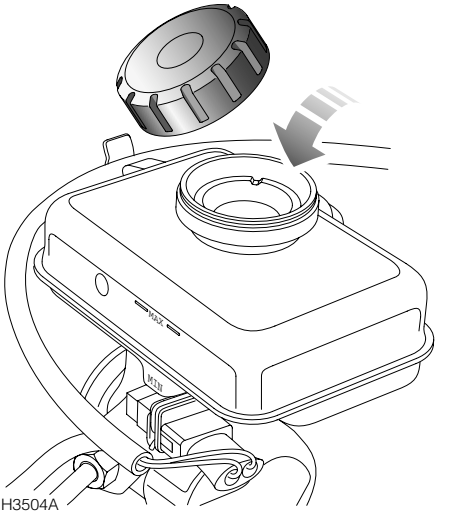

Wipe the filler cap clean before removing, to prevent dirt from entering the reservoir. Unscrew the cap and top-up the reservoir to the 'MAX' mark using a recommended fluid.

Use only new fluid from an airtight container (old fluid from opened containers or fluid previously bled from the system will have absorbed moisture, which will adversely affect performance, and must NOT be used). **DO NOT OVERFILL!**

Brake fluid specification

Only use Shell Donax YB DOT 4 brake fluid or, if this is unavailable, use a brake fluid of the same specification.

WWW.MANUALS.WS

WWW.MANUALS.WS

POWER STEERING FLUID

WARNING

Power steering fluid is highly toxic and could be fatal if swallowed - keep containers sealed and out of reach of children. If consumption of fluid is suspected, seek medical attention immediately.

If power steering fluid should come into contact with the skin or eyes, rinse immediately with plenty of water.

Take care not to spill power steering fluid onto a hot engine - a fire may result. Wipe up any spillage immediately.

Check and Top-up

Check and top-up the fluid level ONLY when the engine is cold. You should also ensure that the front wheels are in the straight ahead position before stopping the engine and checking the fluid level.

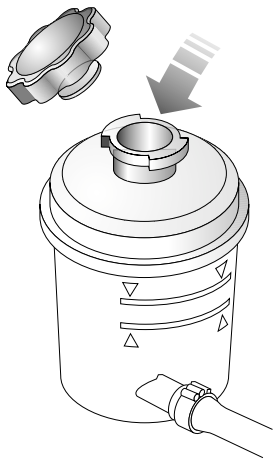

H2346

Check the fluid level against the marks on the side of the reservoir.

If more fluid is needed, first wipe the filler cap clean to prevent dirt from entering the reservoir, then twist the cap a quarter turn anti-clockwise and pull to remove.

Top up the reservoir to the upper level mark using a recommended fluid. **DO NOT OVERFILL!**

CAUTION: Power steering fluid will damage painted surfaces: Soak up any spillage with an absorbent cloth immediately and wash the area with a mixture of car shampoo and water.

Emergency operation

Any large or sudden drop in the fluid level must be investigated by a qualified retailer.

If it can be established that fluid loss is slow, then the reservoir may be topped-up to the upper level mark to enable the vehicle to be driven to the nearest qualified retailer for examination.

If the fluid level has dropped below the lower level mark, top-up the reservoir before starting the engine, or damage to the steering pump could result.

Fluid specification

Only use fluids to Dexron IID or III specification.

Oils manufactured to the above specifications are suitable for use in temperatures between -4°F to + 86°F (-20°C to +30°C). If climatic temperature falls outside these limits, seek advice from your retailer.

NOTE: *The color of commercially available fluids may differ from that of the power steering fluid used to fill the system during manufacture. This is not cause for concern.*

WWW.MANUALS.WS

WWW.MANUALS.WS

WINDSHIELD WASHERS

Fluid top-up

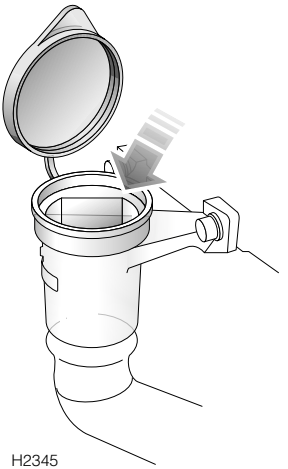

The windshield washer reservoir supplies both front and rear windshield washer jets.

Check the reservoir level at least every week and to prevent freezing in cold weather, top-up with a mixture of water and a recommended screenwash.

Preferably mix the recommended quantities of water and screenwash in a separate container before topping-up the system, and always follow the instructions on the screenwash container.

CAUTION: State or local regulations on volatile organic compounds may restrict the use of methanol , a common windshield washer anti-freeze additive. Washer fluids containing non-methanol anti-freeze agents should be used only if they provide cold weather protection without damaging the vehicle's paint finish, wiper blades or washer system.

WARNING

If you operate your vehicle in temperatures below 40 degrees F, use washer fluid with anti-freeze protection. In cold weather, failure to use washer fluid with anti-freeze protection could result in impaired windshield vision and increase the risk of a vehicle crash.

CAUTION: DO NOT use an anti-freeze or vinegar/water solution in the washer reservoir - anti-freeze will damage painted surfaces, while vinegar can damage the windshield washer pump.

Screenwash

Use Land Rover Parts STC8249 screenwash, or any good quality proprietary screenwash.

WARNING

Some screenwash products are inflammable, particularly if high or undiluted concentrations are exposed to sparking. Do not allow screenwash to come into contact with naked flames or sources of ignition.

NOTE: *Body panels may suffer discoloration as a result of screenwash spillage.Take care to avoid spillage, particularly if an undiluted or high concentration of screenwash is being used. If spillage occurs, wash the affected area immediately with water.*

WARNING

Do not put engine coolant in the windscreen washer fluid reservoir. If engine coolant is sprayed onto the windscreen, it could make it difficult to see through the windscreen.

WWW.MANUALS.WS

WWW.MANUALS.WS

Washer jets

Operate the washer switches periodically to check that the nozzles are clear and properly directed.

The windshield washer jets are set during manufacture and should not need adjusting. However, if adjustment is ever necessary, insert a needle into the jet orifice and lever gently to position each jet so that the spray is directed towards the center of the windshield.

Should a windshield washer jet become obstructed, insert a needle or thin strand of wire into the orifice to clear the blockage.

NOTE: *The rear screen washer jet is integral with the wiper arm and requires no adjustment.*

WWW.MANUALS.WS

WWW.MANUALS.WS

WIPER BLADE REPLACEMENT

IMPORTANT
• Grease, silicone and gasoline based products impair the blade's wiping capability. Wash the wiper blades in warm soapy water and periodically check their condition. • If signs of hardness or cracking in the rubber are found, or if the wipers leave streaks or unwiped areas on the windshield during use, then the wiper blades should be replaced. • Clean the windshield regularly with an approved glass cleaner and ensure the windshield is thoroughly cleaned before fitting replacement wiper blades.

Front wiper blades

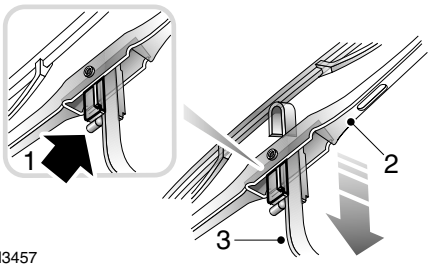

H3457

Lift the wiper arm away from the windshield. With the blade at 90° to the arm as shown, disconnect the blade by pushing in the locking tab (1) and sliding the blade (2) down the arm (3).

Fitting a replacement blade is a reversal of this process; position the new blade assembly on the wiper arm and slide the blade fully towards the hooked end of the arm until it locks in place. Check that the blade is securely locked before returning the wiper assembly to the windshield.

Only fit replacement wiper blades that are identical to the original specification.

Rear wiper blades

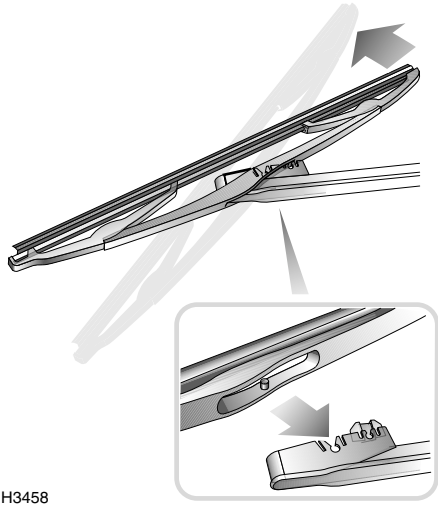

H3458

Lift the wiper arm away from the rear windshield, as far as the spare wheel carrier will allow. Pivot the blade assembly away from the arm (as arrowed), levering against resistance, until the two retaining lugs detach from their slots at the end of the arm. Carefully replace the arm to its stowed position.

To replace, position the wiper arm into the aperture in the middle of the blade assembly, line up the retaining lugs with the corresponding slots in the wiper arm and push firmly into position until the blade clips into place.

WWW.MANUALS.WS

WWW.MANUALS.WS

BATTERY SAFETY

WARNING

Always wear eye protection when working around batteries.

Batteries contain sulphuric acid, which is both corrosive and poisonous. If spillage occurs:

- ***On clothing or the skin - remove any contaminated clothing immediately, flush the skin with large amounts of water, and seek medical attention urgently.***
- ***In the eyes - flush with clean water immediately for at least 15 minutes. Seek medical attention urgently.***
- ***Swallowing battery acid can be fatal unless IMMEDIATE action is taken - seek medical attention urgently.***

During normal operation batteries emit explosive hydrogen gas - to avoid fire, ensure sparks and naked lights are kept away from the engine compartment.

For your safety, remove all metal wrist bands and jewellery before working in the engine compartment and NEVER allow the battery terminals or vehicle leads to make contact with tools or metal parts of the vehicle.

WARNING

Battery posts, terminals, and related accessories contain lead and lead compounds. Wash hands after handling.

BATTERY MAINTENANCE

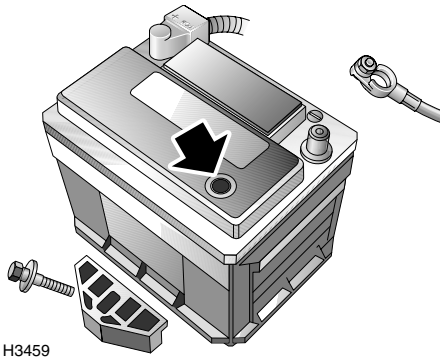

H3459

The battery is designed to be maintenance free, so topping-up is unnecessary. On the top of the battery there is a battery condition indicator (arrowed in illustration). Examine the indicator periodically to check the battery's condition. When the indicator shows:

- GREEN - the battery is in a good state of charge.
- DARK (turning to black) - the battery needs charging.
- CLEAR (or light yellow) - the battery must be replaced. Do not charge the battery or push start the vehicle in this condition.

NOTE: *If necessary, clean the battery top to ensure a clear view. Use a flashlight if natural light is poor.*

If the indicator shows clear or yellow, tap the indicator with the handle of a screwdriver to disperse any air bubbles. If the color is unchanged, the battery must be replaced.

WWW.MANUALS.WS

WWW.MANUALS.WS

Battery removal and replacement

WARNING

ALWAYS remove the starter key before disconnecting the battery. Failure to do this could cause a failure of the airbag SRS.

To prevent a short circuit, ALWAYS disconnect the negative ('-') cable first and NEVER allow the battery terminals or vehicle leads to make contact with tools or metal parts of the vehicle.

IMPORTANT

- Do not reverse the polarity of the battery - the electrical system may be damaged if the battery leads are connected to the wrong terminals.
- DO NOT run the engine with the battery disconnected, or disconnect the battery while the engine is running.
- Keep the battery upright at all times - damage will be caused if the battery is tilted more than 45 degrees.
- DO NOT disconnect the battery when the security system is armed.

Before disconnecting the battery, disarm the alarm, and ensure that the starter switch and all electrical equipment is turned off.

To remove: disconnect the negative ('-') cable first and then the positive ('+') cable. When reconnecting, connect the positive cable first and then the negative cable. Do not allow the battery terminals to make contact with metal parts of the vehicle.

To release the battery from the vehicle, undo the bolt and remove the battery clamping plate (see illustration).

When replacing, ensure the battery is fitted the right way round (terminal posts towards the rear of the vehicle) and that the clamping plate is secure. Tighten the clamping plate bolt until the clamping plate is free from movement (maximum torque 12 Nm (9 lbf.ft). Do not overtighten.

Battery disposal

Used batteries should be recycled. However, batteries are hazardous - you should seek advice about disposal from a Land Rover retailer or your local authority.

Replacement batteries

Only fit a replacement battery of the same type and specification as the original - other batteries may vary in size or have different terminal positions which could cause a fire hazard when connected to the vehicle's electrical system. Contact a Land Rover retailer for suitable replacements.

WWW.MANUALS.WS

WWW.MANUALS.WS

Battery charging

WARNING

Batteries generate explosive gases, contain corrosive acid and produce levels of electric current sufficient to cause serious injury. While charging always heed the following precautions:

- ***Before charging, disconnect and remove the battery from the vehicle - charging the battery with the cables connected may damage the vehicle's electrical system.***
- ***Make sure the battery charger leads are securely clamped to the battery terminals BEFORE switching on the battery charger. Do not move the leads once the charger is switched on.***
- ***While charging, shield your eyes or avoid leaning over the battery and keep the area around the top of the battery well ventilated.***
- ***Do not allow open flame and/or incandescent lamps near the battery (batteries generate inflammable hydrogen during and after charging).***
- ***If the battery is fitted with a condition indicator, the indicator shows GREEN when the battery is charged sufficiently. When charging is finished, switch off the battery charger BEFORE disconnecting the leads from the battery terminals.***

After charging, leave the battery for an hour BEFORE reconnection to the vehicle - this will allow time for explosive gases to disperse, thereby minimising the risk of fire or explosion.

CAUTION: DO NOT charge the battery if it is connected to the vehicle - this may seriously damage the vehicle's electrical system.

As the battery ages, it may not retain its charge as effectively as when it was new. Vehicles that are used infrequently, or are used excessively for short journey motoring, or operation in cold climates, may need the battery to be charged regularly.

Always check the battery condition indicator before charging.

NOTE: Be aware that a battery will take longer to charge in a cold environment.

IMPORTANT INFORMATION
DO NOT attempt to charge the battery if the battery condition indicator is clear or light yellow. DO NOT charge the battery if it is suspected of being frozen.

WWW.MANUALS.WS

WWW.MANUALS.WS

THE EFFECTS OF BATTERY DISCONNECTION

Some of the vehicle's electrical systems will be affected if the battery is disconnected. These are listed below, together with the symptoms you might experience once the battery is reconnected and the actions required to restore operation.

Radio/cassette player

After battery disconnection, the radio code may be lost and the set fail to operate; this will be apparent from the message appearing in the display. To restore operation, enter the security code using the procedure described in the *'In-Car Entertainment' book.*

Taildoor glass

If the battery has been disconnected, the taildoor glass will need to be recalibrated. If the alarm was armed when the battery was disconnected (or discharged), disarm the alarm after battery reconnection - the taildoor glass will fully lower. This will happen automatically if the alarm was in a disarmed state when the battery was disconnected.

After battery reconnection, fully raise the taildoor glass (if the glass is not fully raised, an error 'beep' will sound) - the taildoor glass is now recalibrated.

Alarm system

The alarm system will automatically reset to the status in operation prior to battery disconnection, but the handset will need to be resynchronised, see *'Handset resynchronisation', page 33*.

Clock

The clock will need to be reset to the correct time, see *'CLOCK', page 82*.

WWW.MANUALS.WS

WWW.MANUALS.WS

CARING FOR YOUR TIRES

WARNING

Do not drive if any tire is damaged, is excessively worn, or is inflated to an incorrect pressure.

ALWAYS replace worn or defective tires with the factory recommended specification (see 'WHEELS & TIRES', page 208). Failure to do so may affect the safe handling of the vehicle.

Always drive with consideration for the condition of the tires, and regularly inspect the tread and side walls for any sign of distortion (bulges), cuts or wear.

The most common causes of tire failure are:

- Bumping against curbs
- Driving over deep potholes in the road
- Driving with under or over-inflated tires

NOTE: *If possible, protect tires from contamination by oil, grease, gasoline and other automotive fluids.*

Tire pressures

Correctly inflated tires will ensure that you enjoy the best combination of tire life, ride comfort, fuel economy and road handling.

Under-inflated tires wear more rapidly, can seriously affect the vehicle's road handling characteristics and fuel consumption, as well as increasing the risk of tire failure.
Over-inflated tires give a harsher ride, wear unevenly and are more prone to damage.

Tire pressures should be checked at least once a week with normal road use, but should be checked DAILY if the vehicle is used off-road.

Check the pressures (including the spare wheel) when the tires are cold - be aware that air pressure naturally increases in warm tires and it only takes a mile (1.6 km) of driving to warm up the tires sufficiently to affect the tire pressures.

If it is necessary to check the tires when they are warm (after the vehicle has been driven for a while), you should expect the pressures to have increased between 4 and 6 lbf/in^2 (0.3 and 0.4 kgf/cm^2). In this circumstance, DO NOT let air out of the tires in order to match the recommended pressures.

NOTE: *If the vehicle has been parked in strong sunlight or used in high ambient temperatures, DO NOT reduce tire pressures: instead, move the vehicle into the shade and allow the tires to cool before checking.*

For the recommended pressures for cold tires, see 'TIRE PRESSURES', page 209.

WWW.MANUALS.WS

WWW.MANUALS.WS

Tire wear

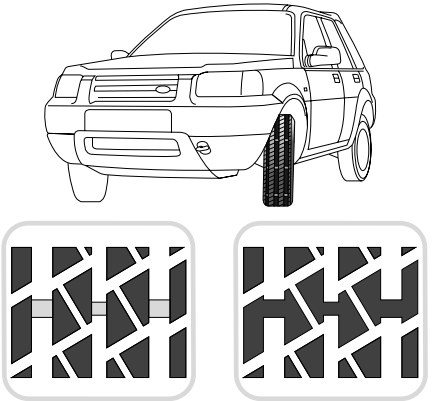

H3460

The tires fitted as original equipment to your vehicle have wear indicators moulded into the tread pattern. When the tread has worn down to 1/16 inch (1.6 mm) the indicators start appearing at the surface of the tread pattern, producing the effect of a continuous band of rubber across the width of the tire.

A tire MUST be replaced as soon as an indicator band becomes visible or the tread depth reaches the minimum permitted by legislation.

NOTE: *If tire wear is uneven (on one side of the tire only) or becomes abnormally excessive, the wheel alignment should be checked by your retailer.*

Tread depth must be checked regularly (at every maintenance service, or more frequently). Always replace a tire before the tread reaches a remaining depth of 1/16 inch (1.6 mm). DO NOT drive with tires worn to this limit because the safety of the vehicle and occupants will be adversely affected.

NOTE: *After off-road use, check to make sure there are no lumps or bulges in the tires or exposure of the ply or cord structure.*

Valves

Keep the valve caps screwed down firmly - they prevent dirt from entering the valve. Check the valve for leaks (listen for a tell-tale hissing) when you check the tire pressure.

Punctured tires

Your vehicle is fitted with tubeless tires, which may not leak if penetrated by a sharp object, provided the object remains in the tire. If you are aware of this occurring, reduce speed immediately and drive with caution until the spare wheel can be fitted.

A puncture of this kind will eventually cause the tire to lose pressure, which is why regular (and frequent) checking of tire pressures is important. Punctured or damaged tires must be permanently repaired or replaced as soon as possible - if in doubt, seek expert advice.

DO NOT DRIVE WITH A PUNCTURED TIRE!

WWW.MANUALS.WS

WWW.MANUALS.WS

Replacement tires

Wheel rims and tires are matched to suit the handling characteristics of the vehicle. For safety, ALWAYS check that replacement tires comply with the original specification shown in *'WHEELS & TIRES', page 208*, later in this handbook and that the load and speed ratings shown on the side wall are the same as that of the original equipment. Contact your Land Rover retailer for further information or assistance.

Ideally, tires should be replaced as sets of four, but if this is not possible, replace the tires as axle sets. When replacing tires in axle sets, always fit the new tires to the rear axle.

WARNING

ALWAYS use the same make and type of radial-ply tires front and rear. DO NOT use bias-ply tires, or interchange tires from front to rear. Make sure that all replacement tires are of the same size, load carrying capacity and tread design as original equipment tires.

Your vehicle is fitted with road wheels that will NOT accept inner tubes. DO NOT fit a tubed tire.

DO NOT replace wheels with any type other than genuine Land Rover parts. Wheels and tires are designed for both off-road and on-road use and have a very important influence on vehicle handling. Alternative wheels which do not meet original equipment specifications should not be fitted.

Always have the wheels and tires re-balanced after replacing.

UNIFORM TIRE QUALITY GRADING

Quality Grades can be found where applicable on the tire sidewall between tread shoulder and maximum section width. For example:

Treadwear 200	*Traction AA*	*Temperature A*

Tires that are deep tread, winter-type snow tires are exempt from the marking requirements as described above. Consequently, the tires fitted to your vehicle may not carry these markings.

All passenger car tires must conform to Federal Safety Requirements in addition to these grades.

Treadwear

The treadwear grade is a comparative rating based on the wear rate of the tire when tested under controlled conditions on a specified government test course. For example; a tire graded 150 would wear one and one-half (1½) times as well on the government course as a tire graded 100. However, the relative performance of tires depends upon the actual conditions of their use, and may depart significantly from the norm due to variations in driving habits, service practices and differences in road characteristics and climate.

WWW.MANUALS.WS

WWW.MANUALS.WS

Traction

The traction grades, from highest to lowest, are AA, A, B and C. The grades represent a tire's ability to stop on wet pavement as measured under controlled conditions on specified government test surfaces of asphalt and concrete. A tire marked 'C' may have poor traction performance.

WARNING

The traction grade assigned to this tire is based on straight-ahead braking traction tests, and does not include acceleration, cornering, hydroplaning, or peak traction characteristics.

Temperature

The temperature grades A (the highest), B, and C, represent a tire's resistance to the generation of heat and its ability to dissipate heat when tested under controlled conditions on a specified indoor laboratory test wheel. Sustained high temperatures can cause the material of a tire to degenerate and reduce tire life, and excessive temperature can lead to sudden tire failure.

The grade 'C' corresponds to a level of performance which all passenger car tires must meet under the Federal Motor Safety Standard No 109.

Grades 'B' and 'A' represent higher levels of performance on the laboratory test wheel than the minimum required by law.

WARNING

The temperature grade for this tire is established for a tire that is properly inflated and not overloaded. Excessive speed, under inflation, or excessive loading, either separately or in combination can cause heat buildup and possible tire failure.

SNOW CHAINS

Snow chains are designed for use on roads in extreme conditions only, and are not recommended for off-road use. If it is necessary to fit snow chains to your vehicle, ALWAYS observe the following:

- ONLY Land Rover approved chains should be used - these are designed for your vehicle and will eliminate any risk of damage to other components.
- Always adhere to the snow chain fitting and retensioning instructions, and the speed limitations recommended for varying road conditions. NEVER exceed 30 mph (50 km/h).
- Avoid tire damage by removing the chains as soon as the road is free from snow.

For further information about approved snow chains, consult your Land Rover retailer.

WARNING

DO NOT fit unapproved snow chains to the rear wheels - this could damage brake components, and seriously affect the vehicle's ability to stop, potentially resulting in occupant or third party injury.

DO NOT fit snow chains to the front wheels; this could damage brake components.

WWW.MANUALS.WS

WWW.MANUALS.WS

WASHING YOUR VEHICLE

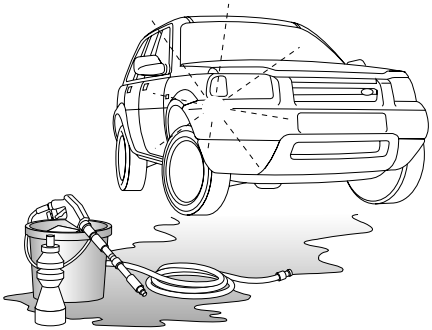

H3461

CAUTION: Read individual product warnings before using any cleaning or washing products.

CAUTION: Some high pressure cleaning systems are sufficiently powerful to penetrate door and window seals and damage rubbing strips and locking mechanisms. Never aim the water jet directly at heater air intakes, body and sunroof seals, or at any components that might easily be damaged.

If the vehicle is particularly dirty, use a hose to flush grime and grit from the painted surfaces, prior to washing. Then, wash the vehicle using cold or lukewarm water containing a good quality wash and wax shampoo. Always use plenty of water to ensure that grit is flushed from the surface and not ground into the paintwork. After washing, rinse the vehicle with clean water and dry off with a chamois leather.

- Do not use hot water!
- Do not use detergent soap products or washing-up liquid!
- In hot weather, do not wash the vehicle in direct sunlight.

When using a hose, do not direct the jet into the heater air intake ducts, or through the wheel trim apertures onto the brake components, or at the door, window or sunroof seals.

Automatic car wash

If using an automatic car wash remove the radio aerial before entering the car wash.

Removing tar spots

Use mineral spirit or turpentine to remove tar spots and stubborn grease stains from paintwork. Then wash immediately with soapy water to remove all traces of spirit.

Underbody maintenance

Corrosive materials used for snow and ice removal and dust control can collect on underbody parts. If these materials are not removed, accelerated rusting can occur. Use a hose to regularly flush the underbody with plain water, taking particular care to thoroughly clean those areas where mud and other debris can easily collect.

Similarly, after off-road driving or wading in muddy or salt water conditions, use a hose to wash underbody components and other exposed parts of the vehicle.

MANUALS.WS

WWW.MANUALS.WS

Engine compartment
The engine compartment must only be cleaned by steam cleaning.

CAUTION: DO NOT use a high pressure hose to clean the engine compartment - damage to the vehicle's electronic systems may occur.

Steam cleaning
Before steam cleaning the engine compartment, cover the power steering reservoir to prevent contamination of fluid, and ensure the covers/seals protecting all the electrical components are in place. After steam cleaning carefully re-wax the metallic components, especially the steering column, engine coolant pipes, hose clips and the ignition coil clamp, to prevent corrosion.

CAUTION: DO NOT direct high temperature, or high pressure, steam or water onto electrical wiring and components.

Body protection
After washing, inspect the paintwork for damage. Any stone chips, fractures or deep scratches in the bodywork should be repaired promptly. Bare metal will corrode quickly and can develop into major repair expense.

Minor chips and scratches can be repaired with touch-up materials available from your retailer. Larger areas of damage need to be corrected to professional standards immediately.

Polishing
Occasionally treat the paint surface with an approved polish containing the following properties:

- Very mild abrasives to remove surface contamination without removing or damaging the paint.
- Filling compounds that will fill scratches and reduce their visibility.
- Wax to provide a protective coating between the paint and the elements.

NOTE: *DO NOT apply wax polish to the bumper mouldings - polish will become ingrained in the textured finished.*

Windows and mirrors
Regularly clean all windows and mirrors, inside and out, using an approved glass cleaner.

Windshield: In particular, clean the outside of the windshield with glass cleaner after washing the vehicle with wash and wax products, and before fitting new wiper blades.

Rear windshield: Clean the inside with a soft cloth, using a side to side motion to avoid damaging the heating elements. DO NOT scrape the glass or use abrasive cleaners - this will damage the heating elements.

Mirrors: Wash with soapy water. Use a plastic scraper to remove ice. DO NOT use abrasive cleaners or metal scrapers.

Wiper blades
Wash in warm soapy water. DO NOT use spirit or gasoline-based cleaners.

WWW.MANUALS.WS

WWW.MANUALS.WS

CLEANING THE INTERIOR

WARNING

Read individual product warnings before using any cleaning or washing products.

Plastic/PVC materials
Clean plastic-faced or cloth covered surfaces with diluted upholstery cleaner and wipe with a clean cloth.

NOTE: *DO NOT polish facia components - for safety, these should remain non-reflective.*

Leather
Leather seats, steering wheel and trim features should be cleaned with warm water and a non-detergent soap. Dry and polish the leather with a dry, lint-free cloth.

NOTE: *DO NOT use gasoline, detergents, furniture creams or polishes!*

Carpet and fabrics
Clean with diluted nylon upholstery cleaner - test a concealed area first.

Instrument pack, clock and radio
Use a clean cloth which has been moistened slightly with water.

CAUTION: Do not use chemicals or household cleaners. Keep fluids and liquids of all kinds away from the radio.

Facia-mounted rubber mats
The mats are removable for cleaning - replace with care.

Seat belts
Extend the belts, then use warm water and a non-detergent soap to clean. Allow the belts to dry naturally, and do not retract them or use the vehicle until they are completely dry.

CAUTION: DO NOT use bleaches, dyes or cleaning solvents on seat belts.

WARNING

To prevent airbag SRS damage, the steering wheel center pad, the area of the facia panel containing the passenger airbag, the roof headlining and the front door trim panels should ONLY be cleaned sparingly with a damp cloth and upholstery cleaner.

DO NOT allow these areas to be flooded with liquid, and DO NOT use gasoline, detergent, furniture cream or polishes.

WWW.MANUALS.WS

WWW.MANUALS.WS

CONTACTING YOUR RETAILER

When communicating with your retailer, always quote the Vehicle Identification Number (VIN). If your communication concerns the engine or gearbox, it may be necessary to quote these numbers as well.

IDENTIFICATION NUMBER LOCATIONS

1. Vehicle Identification Number (VIN)
2. Engine Number

   Stamped vertically into the right side of the cylinder block (when viewed from the front).
3. Gearbox Number

   On a label attached to the upper face of the gearbox housing.

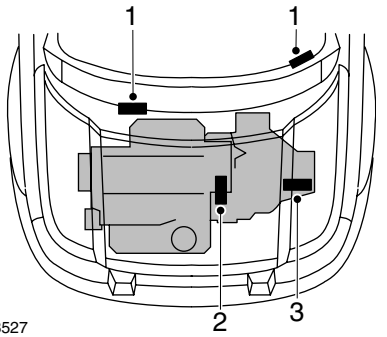

H3527

WARNING

DO NOT exceed the gross weight or axle loads stated on the certification label attached to the vehicle. Exceeding allowable vehicle and axle loads will increase the risk of tire or suspension failure, increase vehicle brake stopping distance, and adversely affect vehicle handling and stability which may result in a crash or rollover.

VEHICLE IDENTIFICATION NUMBER

The VIN (and recommended maximum vehicle weights) is stamped on a label at the foot of the driver's door pillar and also stamped into the bulkhead, at the top, inside the engine compartment. In addition, as a deterrent to car thieves and to help the police, the VIN is stamped into a plate, visible at the bottom left hand corner of the windshield.

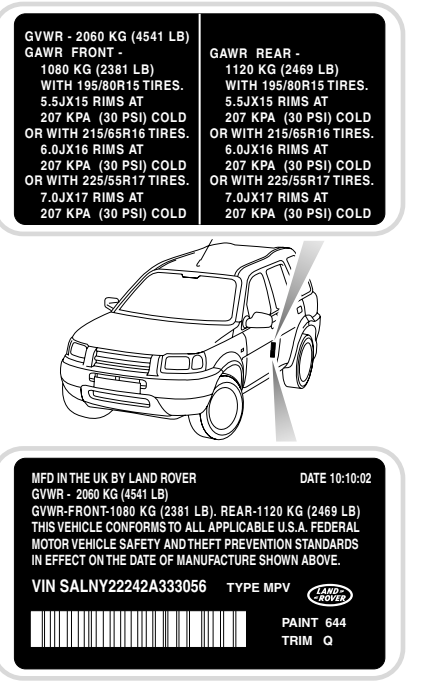

H4860

WWW.MANUALS.WS

WWW.MANUALS.WS

PARTS AND ACCESSORIES

Your vehicle has been designed, built and tested to cope with a variety of off-road driving conditions, some of which can place the severest possible demands on control systems and components. As such, fitting replacement parts and accessories that have been developed and tested to the same stringent standards as the original components will safeguard the continued reliability, safety and performance of your vehicle.

To augment the vehicle's already impressive performance, a comprehensive range of Land Rover-approved spare parts and accessories is available, enabling the vehicle to fulfil a wide variety of roles, and enhancing and protecting the vehicle in the many tasks to which it can be applied.

Land Rover parts are the only parts built to original equipment specifications AND approved by Land Rover designers; this means that every single part and accessory has been rigorously tested by the same engineering team that designed and built the vehicle and, with the exception of maintenance items that are designed to be replaced sooner, is warranted as provided in the Passport to Service.

A full list and description of all accessories is available from your Land Rover retailer.

WARNING

DO NOT fit unapproved accessories or conversions, as they could affect the safety of the vehicle.

Land Rover will not accept any liability for death, personal injury or damage to property which may occur as a direct result of fitment of non-approved accessories or the carrying out of non-approved conversions to Land Rover vehicles.

Land Rover North America Inc. strongly advises against making any modifications to the suspension or steering system. This could seriously affect the handling and stability of the vehicle leading to loss of control or rollover.

WWW.MANUALS.WS

WWW.MANUALS.WS

Electrical equipment

WARNING

It is extremely hazardous to fit or replace parts or accessories whose installation requires the dismantling of or addition to either the electrical, fuel or SRS airbag systems as damage to the proper operation of these systems could result.

ALWAYS consult a Land Rover retailer before fitting any electrical accessory.

Fitting inferior quality parts or accessories may be dangerous and could invalidate the vehicle warranty.

It is recommended that you always consult a Land Rover retailer for advice regarding the approval, suitability, installation and use of any parts or accessories before fitting.

Travelling abroad

In certain countries, it is illegal to fit parts which have not been made to the vehicle manufacturer's specification.

Owners should ensure that any parts or accessories fitted to the vehicle while travelling abroad will also conform to the legal requirements of their own country when they return home.

SRS/Airbag

WARNING

The components that make up the SRS/airbag are sensitive to electrical or physical interference, either of which could easily damage the system and cause inadvertent operation or a malfunction of the airbag module.

To prevent any SRS/airbag malfunction, ALWAYS consult a Land Rover retailer before fitting any of the following:

- ***Electronic equipment such as a mobile phone, two-way radio or in-car entertainment system.***
- ***Accessories attached to the front of the vehicle.***
- ***Any modification to the front of the vehicle.***
- ***Any modification involving the removal or repair of any wiring or component in the vicinity of any of the SRS components (yellow wiring harness), including: the steering wheel, steering column, instrument and facia panels.***
- ***Any modification to the facia panels or steering wheel.***

WWW.MANUALS.WS

Emergency Information

WWW.MANUALS.WS

Wheel Changing

TOOL KIT 181
SPARE WHEEL. 182
JACKING 183
CHANGING A WHEEL. 184

Emergency Starting

STARTING WITH A DISCHARGED BATTERY . . . 185
BATTERY SAFETY 186

Towing the Vehicle

TOWING EYES 187
TOWING FOR RECOVERY 187
LONG DISTANCE/MOTORHOME TOWING 188
TRANSPORTER OR TRAILER LASHING. 188

Fuses

FUSES 189
MAIN FUSE BOX 189
ENGINE COMPARTMENT FUSE BOX 192
SUPPLEMENTARY FUSE BOX 193

Bulb Replacement

REPLACING BULBS 194
HEADLIGHT AND SIDELIGHT 195
FRONT DIRECTION INDICATOR. 196
SIDE REPEATER LIGHT 196
SIDE MARKER LIGHTS (front and rear). 197
REAR LIGHT CLUSTER
(Reverse and tail lights) 197
REAR BUMPER MOUNTED LIGHTS
(Rear direction indicator & tail/stop lights) 198
HIGH MOUNTED STOP LIGHT 198
NUMBER PLATE LIGHTS 199
FRONT COURTESY & MAP READING LIGHTS. . 199
REAR COURTESY LIGHT 200
GLOVEBOX LIGHT 201
LOADSPACE LIGHT 201
VANITY MIRROR LIGHT 202

WWW.MANUALS.WS

WWW.MANUALS.WS

WWW.MANUALS.WS

WWW.MANUALS.WS

TOOL KIT

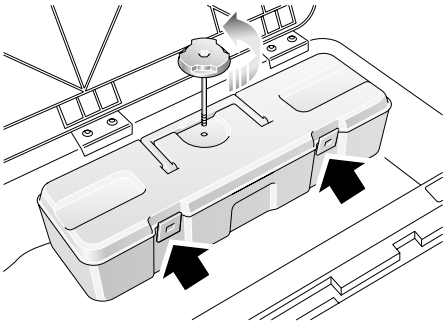

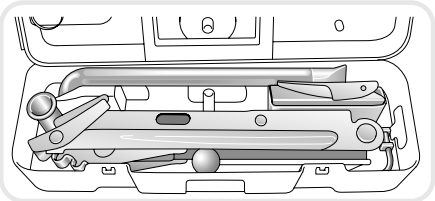

H3492

The tool kit is contained in a toolbox located in the rear loadspace stowage box. To remove the toolbox from the stowage box, unscrew the restraining clamp.

To open the toolbox, lift the two catches.

NOTE: *When not in use, the tools should always be returned to the toolbox, and the toolbox should be securely clamped in the stowage box.*

Only tighten the restraining clamp to 'finger' tightness, when making the toolbox secure.

WARNING

DO NOT drive with the tools or toolbox loose in the vehicle. In the event of a collision they could become dangerous projectiles and cause serious personal injury.

Tools

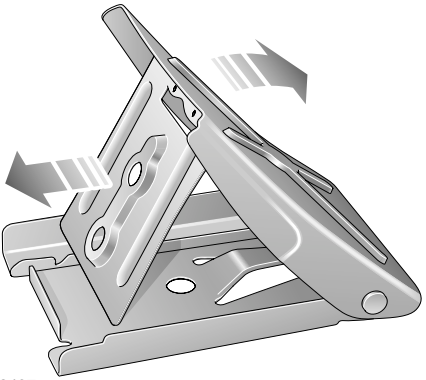

H3497

The tool kit contains the jack, wheel chock, and wheel wrench.

The wheel chock is designed to fold flat and must be assembled, as shown in the illustration, before use.

WARNING

ALWAYS use the wheel chocks when jacking the vehicle.

Care of the jack

Examine the jack occasionally and clean and grease the moving parts.

Always close the jack and return the jack to the toolbox when not in use.

WARNING

After wheel changing, always secure tools, chocks, jack and spare wheel in their correct storage positions. Such objects if not properly stowed can become flying missiles in a crash or rollover, potentially causing injury or death.

WWW.MANUALS.WS

WWW.MANUALS.WS

SPARE WHEEL

Removing the spare wheel

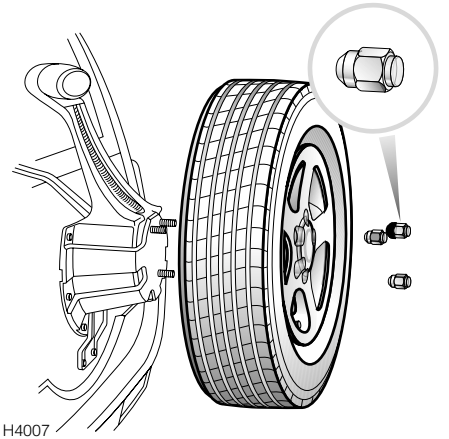

Use the wheel nut wrench supplied in the tool kit to remove the nuts securing the spare wheel to the carrier and then lift off the wheel.

WARNING

DO NOT use the spare wheel securing nuts in place of the road wheel nuts, or use the road wheel nuts to secure the spare wheel - the nuts are not inter-changeable.

The wheels are extremely heavy. Take care when lifting and particularly when removing the spare wheel from its mounting position on the tail door.

Refitting the spare wheel

Position the spare wheel on the carrier, then fit and tighten the nuts securing the spare wheel to the carrier.

WWW.MANUALS.WS

WWW.MANUALS.WS

JACKING

If possible, choose a safe place to stop away from the main thoroughfare. Always ask your passengers to get out of the vehicle and wait in a safe area away from other traffic.

NOTE: *Switch on the hazard warning lights to alert other road users.*

Before changing a wheel, ensure the front wheels are in the straight ahead position, apply the handbrake and select 'P' (Park).

WARNING

ALWAYS use the wheel chocks when jacking the vehicle.

Turn off the starter switch and remove the key. Observe the following precautions:

- Ensure the jack is positioned on firm, level ground; NEVER on soft ground, or over metal gratings or manhole covers. DO NOT place additional material between the jack and the ground, this may jeopardise the safety of the jacking operation.
- Jacking on a slope is NOT recommended, but if it is unavoidable, chock the wheel diagonally opposite the one to be removed on the downhill side, using the chock provided in the tool kit.
- NEVER jack the vehicle with passengers inside or with a caravan or trailer connected!

WARNING

NEVER work beneath the vehicle with the jack as the only means of support. The jack is designed for wheel changing only!

Positioning the jack

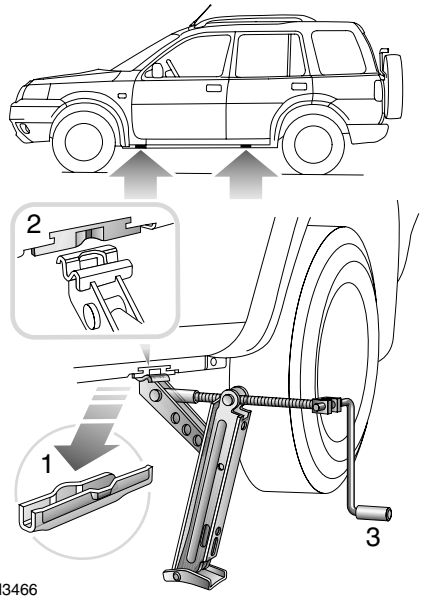

Use the flat, wedge-shaped end of the wheel nut wrench to lever off the appropriate jacking point cover (1).

Position the jack with the base directly under the jacking point (2) nearest the wheel to be removed and with the handle dropping vertically towards the ground (3). Ensure the jack is positioned on firm, level ground.

Turn the jack screw clockwise to raise the jack until the jack head fits snugly around the center of the jacking point.

NOTE: *ONLY jack the vehicle using the jack location points described, or damage to the vehicle could occur. Under no circumstances should any part of the undertray assembly be used as a jacking point.*

WWW.MANUALS.WS

WWW.MANUALS.WS

CHANGING A WHEEL

WARNING

Avoid accidental contact with any underbody parts, especially hot exhaust components.

Removing

1. Use the wheel nut wrench to slacken the wheel nuts half a turn anti-clockwise.
2. Turn the jack handle clockwise to raise the vehicle until the tire is clear of the ground.
3. Remove the wheel nuts and place to one side to prevent them from being lost.
4. Remove the road wheel.

NOTE: *Avoid placing wheels face down on the ground. This may scratch the alloy surface.*

Refitting

1. Before fitting a wheel, ensure that the mating faces of the hub and wheel are clean and free from rust or anti-seize compound - any accumulation of dirt or rust could cause the wheel nuts to become loose and result in an accident. Use an approved anti-seize compound to treat the wheel mounting spigot. This will minimise the tendency for adhesion between wheel and spigot. If this is not practicable at the time of the wheel change, refit the spare wheel for the time being, but remove and treat the wheel at the earliest opportunity. Esure that no compound comes into contact with brake components or the flat mounting surfaces of the wheel.
2. Fit the spare wheel and lightly tighten the wheel nuts (domed side towards the wheel) until the wheel is firmly seated against the hub.
3. Ensure that the space under and around the vehicle is free from obstructions, then lower the vehicle and remove the jack.
4. Fully tighten the wheel nuts in an alternating pattern until all are tightened. DO NOT OVERTIGHTEN by using foot pressure or extension bars on the wheel nut wrench, as this could overstress the wheel studs.
5. Refit the jacking point cover.
6. Fit the replaced wheel to the spare wheel carrier (see *'Refitting the spare wheel', page 182*).
7. Return the tools to the toolbox and secure the toolbox to its bracket in the lockable stowage box in the rear loadspace.

WARNING

Always check the tire pressure after changing a wheel, and have the tightness of the wheel nuts checked by a retailer as soon as possible!

MANUALS.WS

WWW.MANUALS.WS

STARTING WITH A DISCHARGED BATTERY

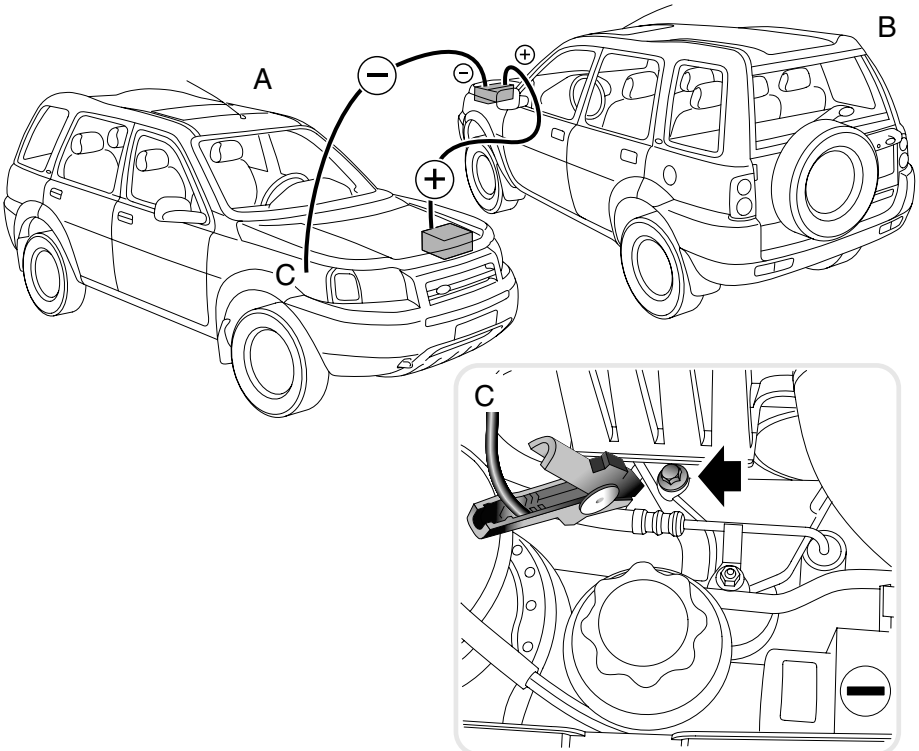

H4008

A. Disabled vehicle
B. Donor vehicle
C. Engine earth point

Using booster cables (jump leads) from a donor battery, or a battery fitted to a donor vehicle, is the only approved method of starting a vehicle with a discharged battery. Push or tow starting is NOT possible!

If the battery is completely discharged (battery condition indicator shows CLEAR), it may not be possible to start the engine using booster cables. In this case, a replacement battery must be fitted.

WARNING

Before using booster cables, ensure that you are familiar with the information shown under 'BATTERY SAFETY', page 186.

WWW.MANUALS.WS

WWW.MANUALS.WS

Always adopt the following procedure:
If a donor vehicle is to be used, both vehicles should be parked with their battery locations adjacent to each other. Ensure that the two vehicles do not touch.

Apply the parking brakes and ensure that the transmission of both vehicles is set in neutral ('P' or Park for vehicles with automatic transmission).

Turn off the starter switch and ALL electrical equipment of BOTH vehicles.

Connect the RED booster cable between the positive (+) terminal of the donor battery and the positive (+) terminal of the discharged battery.

Connect the BLACK booster cable from the negative (-) terminal of the donor battery to a good earth point (eg. an engine mounting or other unpainted surface) at least 0.5 m from the battery and well away from fuel and brake lines on the disabled vehicle (refer to inset 'C' on the previous page).

WARNING

For safety reasons:

- ***DO NOT connect a booster cable to the negative (-) terminal of the discharged battery! If in doubt, seek qualified assistance.***
- ***ENSURE that each connection is securely made and that there is no risk of the clips accidentally slipping or being pulled from the battery terminals - this could cause sparking, which could lead to fire or explosion.***

Check that the cables are clear of any moving parts of both engines, then start the engine of the donor vehicle and allow it to idle for a few minutes. Now start the vehicle with the discharged battery (DO NOT crank the engine for more than 15 seconds).

Once both engines are running normally, allow them to idle for two minutes before switching off the engine of the donor vehicle. DO NOT switch on any electrical circuits on the previously disabled vehicle until AFTER the booster cables have been removed.

Disconnect the booster cables in an EXACT reversal of the procedure used to connect them, ie: disconnect the BLACK cable from the earth point on the disabled vehicle FIRST.

BATTERY SAFETY

WARNING

- ***Always wear appropriate eye protection when working with batteries.***
- ***During normal use, batteries emit explosive hydrogen gas sufficient to cause severe explosions capable of causing serious injury - keep sparks and naked lights away from the engine compartment.***
- ***DO NOT attempt to start the vehicle if the battery is suspected of being frozen.***
- ***Make sure BOTH batteries are of the same voltage (12 volts), and that the booster cables have insulated clamps and are approved for use with 12 volt batteries.***
- ***DO NOT disconnect the discharged battery.***
- ***DO NOT connect positive (+) terminals to negative (-) terminals, and ensure booster cables are kept away from any moving parts in the engine compartment.***
- ***Take care when working near rotating parts of the engine.***
- ***ENSURE that each connection is securely made and that there is no risk of the clips accidentally slipping or being pulled from the battery terminals - this could cause sparking, which could lead to fire or explosion.***

WWW.MANUALS.WS

WWW.MANUALS.WS

TOWING EYES

WARNING

The towing eyes at the front and rear of the vehicle are designed for vehicle recovery purposes only and must NOT be used to tow a trailer or caravan. Excessive force should not be used when being recovered, or when recovering other vehicles using the towing eyes.

Front

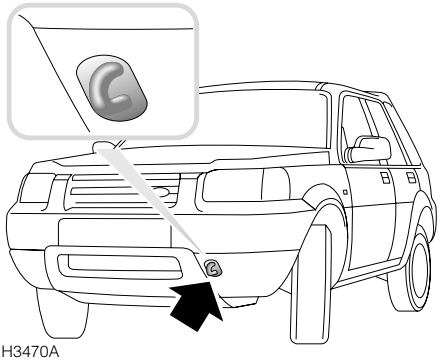

H3470A

A single towing eye, set in the front spoiler is provided for use ONLY when the vehicle is to be towed with all four wheels on the ground.

DO NOT use the front lashing ring for towing purposes.

Rear

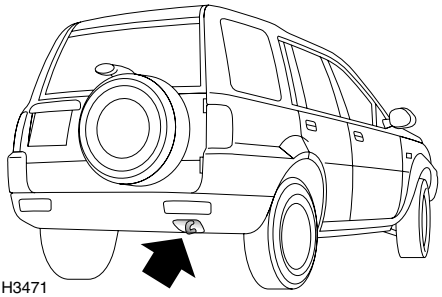

H3471

A single towing eye is provided at the rear of the vehicle for use ONLY when towing another vehicle.

TOWING FOR RECOVERY

Most vehicle recovery specialists will load your vehicle onto a trailer. However, if it is necessary to recover the vehicle by towing with all four wheels on the ground, observe the following procedure:

CAUTION: To avoid serious damage to the transmission, towing distance must be limited to a maximum of 50 miles.

1. Secure the towing attachment from the recovery vehicle to the front towing eye of the vehicle to be recovered.
2. With the parking brake applied and gear selector position ‘P’ (Park) selected, insert the key and turn the starter switch to position ‘I’ to unlock the steering.
3. Place the gear selector lever in ‘N’ (Neutral).
4. If it is necessary for the brake lights, wipers and direction indicators to be operated, turn the starter switch to position ‘II’.
5. Release the parking brake.

NOTE: *If, due to an accident or electrical fault, it is not considered safe to turn the starter switch, the battery should first be disconnected.*

WWW.MANUALS.WS

WWW.MANUALS.WS

WARNING

DO NOT allow the vehicle to be towed further than 50 miles (80 km) and restrict towing speed to 30 mph (50 km/h).

CAUTION: DO NOT tow the vehicle unless the starter switch is turned to position 'I' or 'II' (to unlock the steering).

CAUTION: DO NOT turn the starter switch to position '0', or attempt to remove the key, while the vehicle is in motion.

Suspended tow

If it is necessary to tow your vehicle on two wheels (ie: suspended from a recovery vehicle), it is essential that the propeller shaft connected to the axle that is to remain on the ground is disconnected by qualified personnel, prior to being towed.

CAUTION: If the rear axle is to be raised, the steering wheel and/or linkage MUST be secured in a straight ahead position, but the steering lock MUST NOT be used for this purpose. The vehicle can then be attached to the towing truck.

LONG DISTANCE/MOTORHOME TOWING

CAUTION: Your Freelander is not suitable for long-distance towing. Towing the vehicle on four wheels for distances exceeding 50 miles, will seriously damage the transmission.

TRANSPORTER OR TRAILER LASHING

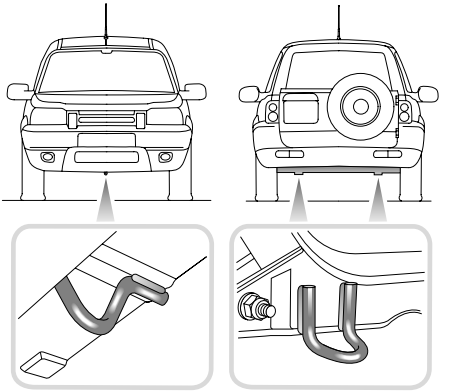

H3472

Lashing rings are fixed to the underside of the vehicle, where shown in the illustration.

Under no circumstances should the vehicle be towed or recovered by lashing to the rear subframes. Serious damage to the subframe and body may occur.

WARNING

The lashing rings are for lashing only and must NOT be used for towing.

WWW.MANUALS.WS

WWW.MANUALS.WS

FUSES

Fuses are simple circuit devices which protect electrical equipment against the effects of excess current. A 'blown' fuse is indicated when the electrical equipment it protects becomes inoperative.

Fuse colors

Fuses are color coded to help identify their amperage, as follows:

VIOLET	3 amp
TAN	5 amp
BROWN	7.5 amp
RED	10 amp
BLUE	15 amp
YELLOW	20 amp
WHITE	25 amp
GREEN	30 amp
ORANGE	40 amp

MAIN FUSE BOX

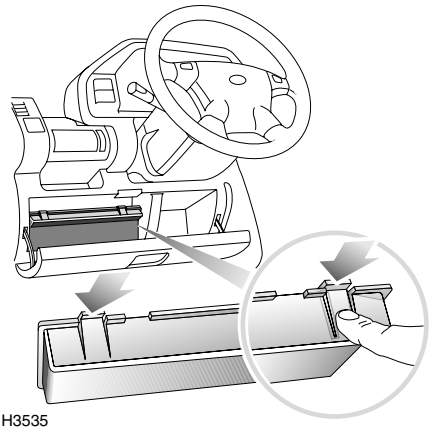

H3535

The main fusebox is located behind the driver's storage area. To access the fuses, open the storage area, depress the two catches arrowed in the illustration and remove the fuse box cover.

NOTE: *A label in the fuse box cover shows the circuits protected, fuse values and locations. They are also listed later in this section.*

WWW.MANUALS.WS

WWW.MANUALS.WS

Checking or renewing a fuse

Always turn the starter switch to position ‘O’ and switch off the affected electrical circuit before removing a fuse.

WARNING

To prevent a possible fire or damage to the electrical system, fit only replacement fuses of the same rating and type. Do not replace a blown fuse with a fuse of a higher amperage rating. Always rectify the cause of the failure before replacing a fuse. Seek qualified assistance if necessary.

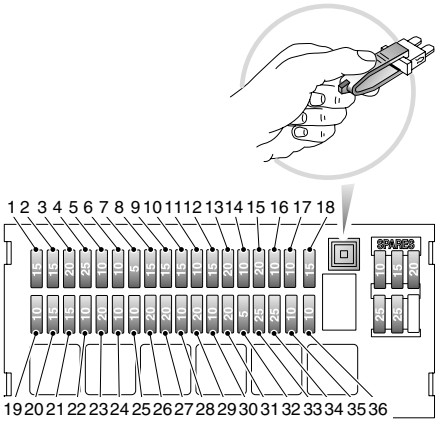

H4715

Press the fuse removal tweezers onto the head of the suspect fuse (as shown) and pull to remove. A break in the wire inside the fuse indicates that the fuse has ‘blown’ and must be replaced. Always replace a fuse with another of the same value. However, if the replacement fuse blows immediately, the circuit MUST be checked by a qualified retailer.

NOTE: *A number of spare fuses are included within the fuse box (see fuse box label).*

WWW.MANUALS.WS

WWW.MANUALS.WS

Fuse specifications

Fuse number	Rating (amps)	Circuits protected
1	15	Rear windshield washers, heated mirrors
2	15	Stop lights, reversing lights
3	20	Windshield wash/wipe
4	25	Heater blower
5	10	Starter motor
6	10	Engine management
7	5	Anti-lock brakes
8	15	Direction indicators
9	15	Audio system
10	15	Cigar lighter*
11	10	Audio system
12	15	Sunroof*
13	20	Electric accessories socket
14	10	Interior lights, clock, electric mirrors, diagnostic socket
15	20	Central door locking
16	10	Sidelights - RH
17	10	Electric mirrors
18	15	Headlight main beam - RH
19	10	Alternator
20	15	Headlight main beam - LH
21	15	-
22	15	-
23	20	Rear windshield demister
24	10	Headlight dipped beam - LH
25	10	Headlight dipped beam - RH
26	20	Window - rear LH
27	20	Window - rear RH
28	10	Sidelights - LH
29	20	Heated seats*
30	10	Rear windshield wiper
31	20	Taildoor glass lift/drop
32	5	Engine immobilisation
33	25	Window - front LH
34	25	Window - front RH
35	10	Cruise control*, engine immobilisation
36	10	**Airbag SRS - DO NOT REMOVE**

WWW.MANUALS.WS

WWW.MANUALS.WS

ENGINE COMPARTMENT FUSE BOX

WARNING

Batteries emit explosive hydrogen gas; ensure that sparks, flames and other ignition sources are kept away from the engine compartment.

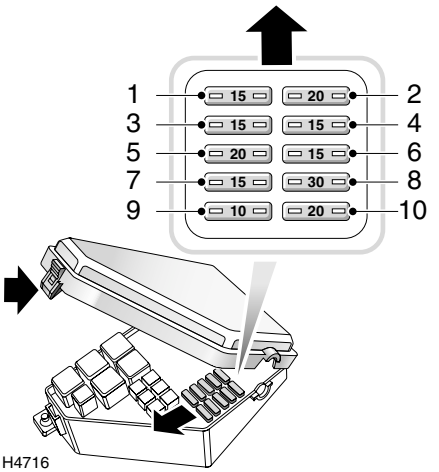

The engine compartment fuse box is located on the left side of the engine compartment.

Press the catch (arrowed in illustration) to release the cover.

Information on the underside of the cover identifies the fuses and their ratings. This information is also listed in the table below.

NOTE: *Owners are advised against removing or replacing the fusible links and relays, identified on the underside of the fuse box lid as: FL (numbers 1 - 12) and R (numbers 1 - 7). Failure of any of these items should be investigated by a qualified technician.*

Fuse specification

Fuse number	Rating (amps)	Circuit protected
1	15	Engine management
2	20	Engine management
3	15	Engine management
4	15	Air conditioning, cooling fan, automatic transmission
5	20	Engine management
6	15	Horn
7	15	Hazard warning lights
8	30	Heater blower speed 4
9	10	Air conditioning
10	20	Fuel system

WWW.MANUALS.WS

WWW.MANUALS.WS

SUPPLEMENTARY FUSE BOX*

WARNING

Batteries emit explosive hydrogen gas; ensure that sparks, flames and other ignition sources are kept away from the engine compartment.

An additional, supplementary fuse box is fitted to some vehicles, containing fuses for the heated front windshield.

The fuse values are shown below.

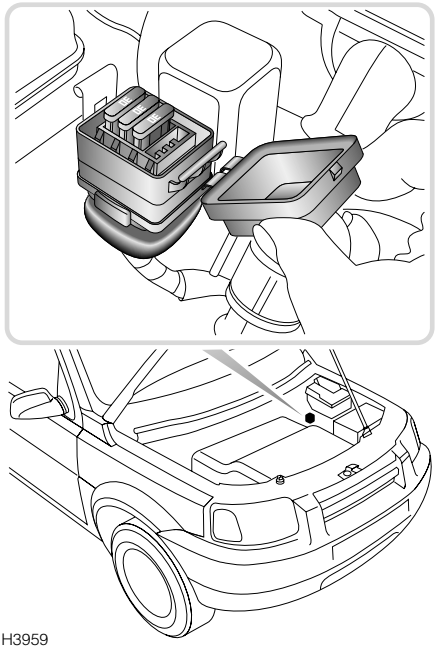

H3959

Fuse specification for vehicles with a heated front windshield

Fuse number	Rating (amps)	Circuit protected
1	30	LH heated front windshield
2	30	RH heated front windshield
3	7.5	Switch illumination
4	-	-

WWW.MANUALS.WS

WWW.MANUALS.WS

REPLACING BULBS

Check the operation of all exterior lights before you use the vehicle.

IMPORTANT
Before replacing a bulb, always switch off the starter switch and appropriate lighting switch to prevent any possibility of a short circuit. Only replace bulbs with the same type and specification.
Halogen bulbs Halogen bulbs are used for headlight dipped and main beams. This type of bulb may shatter in use if the glass has been scratched, or contaminated with oil or perspiration. Take care NOT to touch the glass with your fingers; always use a cloth to handle the bulb. If necessary, clean the glass with methylated spirits to remove fingerprints.

Replacement bulbs

Bulb	Watts
Headlights dipped/main beam	60/55
Side lights	5
Direction indicators	21
Side repeater lights	5
Side marker lights	3
Reverse & tail lights	5/21
Tail/stop lights	5/21
High mounted stop light	21
Number plate light	5
Interior courtesy lights	10
Map reading lights	5
Glovebox light	5
Loadspace light	10
Vanity mirror light	3

NOTE: *All bulbs must be rated at 12 volts*

WWW.MANUALS.WS

WWW.MANUALS.WS

HEADLIGHT AND SIDELIGHT

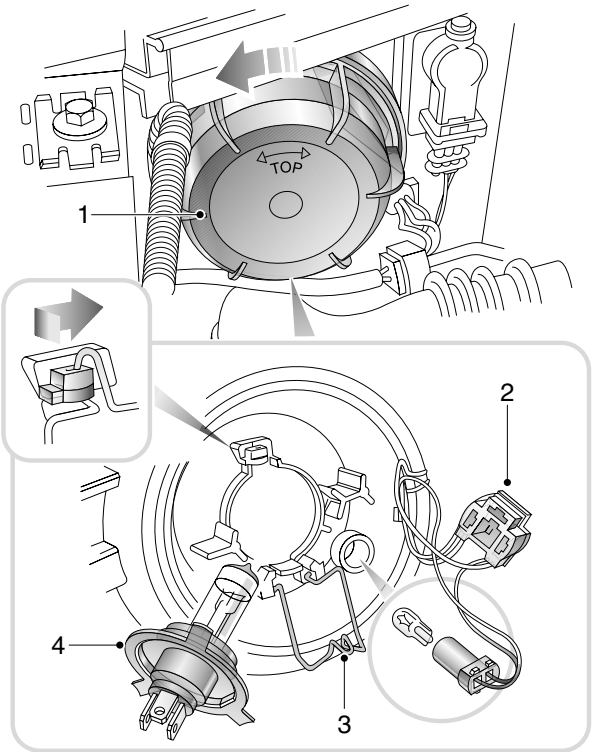

H2371A

The headlight and sidelight bulbs can be accessed from within the engine compartment.

1. Turn the circular plastic cover a quarter turn anti-clockwise and pull rearwards to remove.
2. Detach the electrical connector from the rear of the bulb.
3. Unhook the wire securing clip (arrowed in small inset) and pivot it away from the rear of the bulb.
4. Remove the bulb.

   NOTE: *When fitting the new bulb, ensure that the larger of the rectangular metal tabs is located in the upper recess.*

CAUTION: During use, headlight bulbs may shatter if the glass has been scratched, or contaminated with oil or perspiration. DO NOT touch the glass. If handled, clean with methylated spirits and a clean cloth.

Sidelight bulb replacement

The sidelight holder is immediately adjacent to the headlight bulb. With the circular plastic cover removed, pull the bulb holder from the light unit and pull the bulb to remove.

WWW.MANUALS.WS

WWW.MANUALS.WS

FRONT DIRECTION INDICATOR

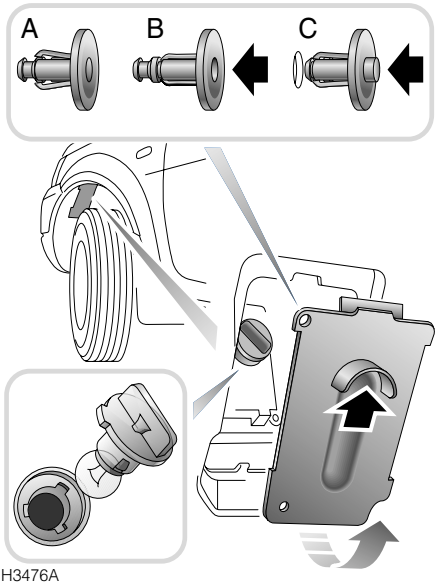

H3476A

The front direction indicator lights are reached through an access panel in the wheel arch liner. To release the panel:

1. Push the center pin of the fixing into the fixing (as condition ‘B’ in upper inset).
2. Prise the fixing from the access panel.
3. Push the tab at the top of the access panel upwards (as arrowed in main illustration). This will enable the panel to be removed.
4. Reach into the recess and turn the bulb holder anti-clockwise to remove.
5. Twist the bulb anti-clockwise to release it from the bulb holder.

When replacing the access panel, insert the top first, then lower the panel so that the bottom edge slots onto the wheel arch liner.

To replace the fixing, push the center pin out of the fixing (as condition ‘C’), then locate the fixing through the access panel and into the wheelarch liner. Finally, push the center pin into the fixing until it lies flush with the body of the fixing.

SIDE REPEATER LIGHT

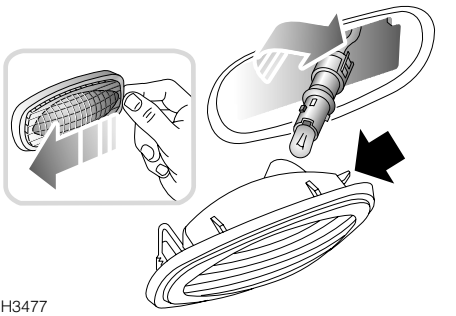

H3477

Push the lens firmly towards the rear of the vehicle and withdraw the light unit from the wing.

Twist to release the bulb holder from the light unit, then pull the bulb from its socket.

When refitting the light unit, ensure that the little tabs (arrowed in illustration) are pointing towards the front of the vehicle.

WWW.MANUALS.WS

WWW.MANUALS.WS

SIDE MARKER LIGHTS (front and rear)

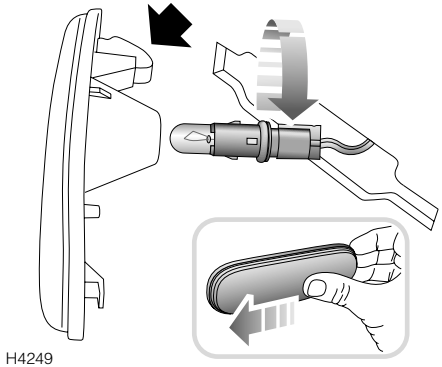

H4249

Push the lens firmly towards the front of the vehicle to release the light unit from the bumper. Withdraw the light unit and twist the bulb holder anti-clockwise to release it from the lens. Pull the bulb from its socket.

When replacing, locate the metal spring (arrowed in illustration) end of the light unit into the aperture in the bumper, and push against spring pressure to enable the light unit to be refitted.

REAR LIGHT CLUSTER (Reverse and tail lights)

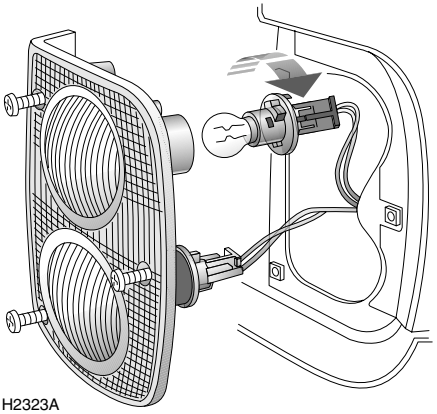

H2323A

Remove the three Torx (size 20) screws securing the light unit to the body and withdraw the light unit.

Disconnect the electrical connectors from the light unit if necessary.

NOTE: *Make sure that the twin filament bulb and bulb holder is fitted to the lower (red lens) section of the light unit. The single filament bulb and holder should be fitted to the upper reversing light section of the light unit.*

Twist the bulb holder anti-clockwise to release from the light unit, then twist the bulb to remove from the holder.

NOTE: *When refitting the light unit, ensure that the foam seal is correctly positioned between the light unit and body.*

WWW.MANUALS.WS

WWW.MANUALS.WS

REAR BUMPER MOUNTED LIGHTS (Rear direction indicator & tail/stop lights)

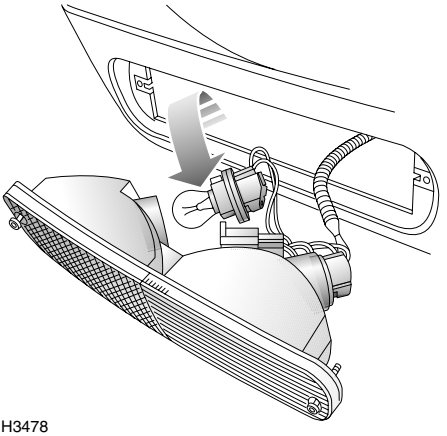

H3478

Remove the two Torx (size 20) screws securing the light unit to the rear bumper. Withdraw the unit from the bumper.

Twist the appropriate bulb holder anti-clockwise to release from the light unit, then twist the bulb to remove from the holder.

HIGH MOUNTED STOP LIGHT

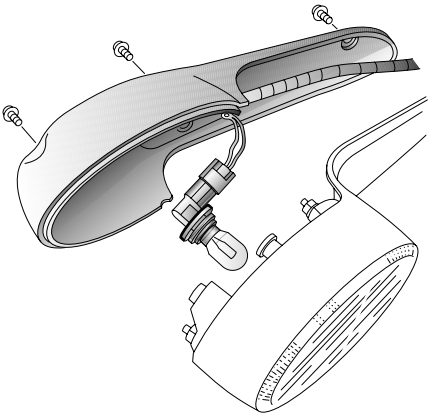

H2358A

To gain access to the light unit, the taildoor glass needs to be lowered (see *'ELECTRIC TAILDOOR GLASS', page 72*).

Remove the 3 screws securing the front of the light unit to the surround and withdraw the light unit.

Twist the bulb holder anti-clockwise, then pull the bulb to remove.

WWW.MANUALS.WS

WWW.MANUALS.WS

NUMBER PLATE LIGHTS

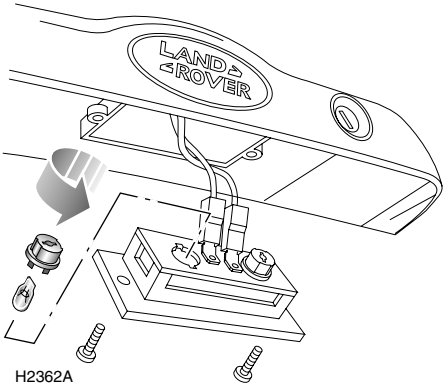

H2362A

Remove both screws to release the light unit. Withdraw the light unit from its surround.

Twist the appropriate bulb holder anti-clockwise to release, then pull the bulb from the holder to remove.

FRONT COURTESY & MAP READING LIGHTS

Front courtesy light

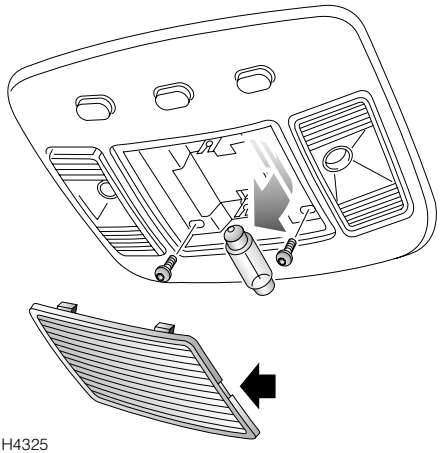

H4325

Insert a small, flat-bladed screwdriver into the indent on one side of the center lens (arrowed in illustration). Prise the center lens from the light unit, then pull the bulb from the clips.

WWW.MANUALS.WS

WWW.MANUALS.WS

Map reading lights

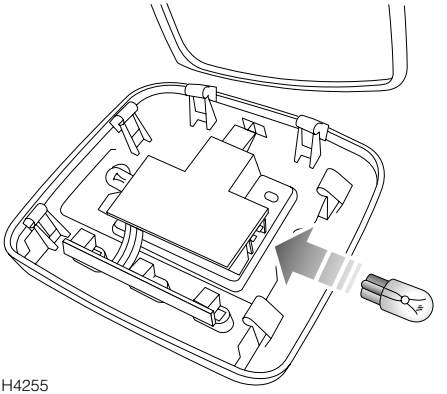

H4255

Remove the center lens (as described on previous page) to reveal two Torx screws.

Remove both screws.

Use a larger flat-bladed screwdriver to prise the courtesy light unit from the headlining, then pull the bulbs to remove.

REAR COURTESY LIGHT

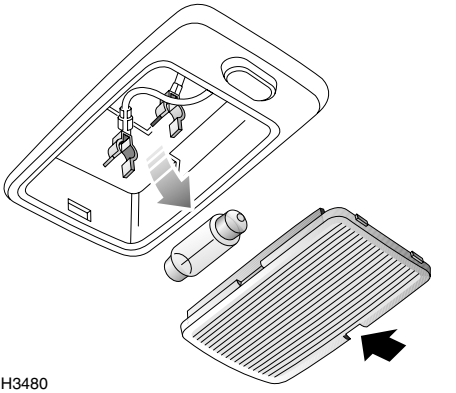

H3480

Insert a small flat-bladed screwdriver into the indent on the side of the lens and prise the lens from the light unit, then pull the bulb from the clips.

WWW.MANUALS.WS

WWW.MANUALS.WS

GLOVEBOX LIGHT

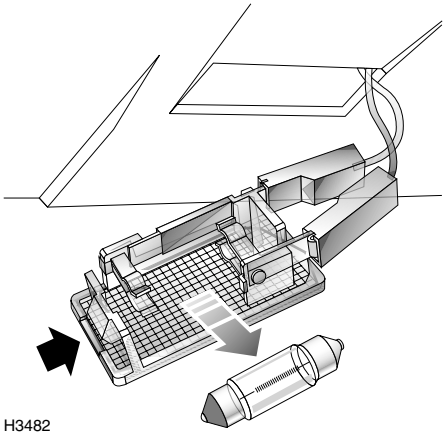

H3482

Insert a small flat-bladed screwdriver (preferably with a short handle, due to limited access) into the indent (arrowed in illustration) on the narrow side of the light unit, and carefully prise the unit from the glovebox panel. Remove the bulb from the clips.

LOADSPACE LIGHT

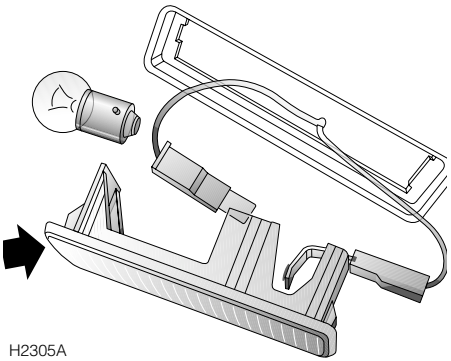

H2305A

Insert a small flat-bladed screwdriver into the indent on one of the narrow sides of the lens (see arrow on illustration) and carefully prise the unit from the loadspace trim panel. Push and twist the bulb to remove.

WWW.MANUALS.WS

WWW.MANUALS.WS

VANITY MIRROR LIGHT*

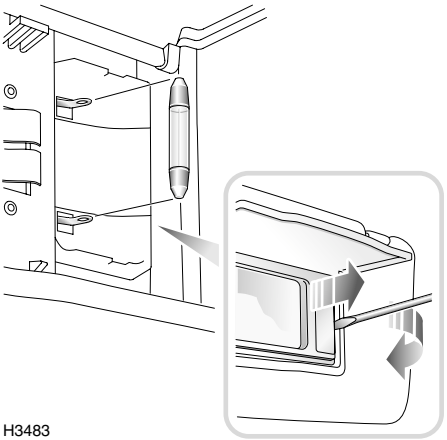

H3483

Using a small, flat-bladed screwdriver as a lever (see inset), prise the lens and mirror from the light unit. ‘Spring’ the bulbs free from the connectors to remove.

WWW.MANUALS.WS

WWW.MANUALS.WS

Technical Data

LUBRICANTS AND FLUIDS 205
ENGINES 207
ELECTRICAL 207
STEERING GEOMETRY 207
WHEELS & TIRES 208
TIRE PRESSURES 209
CAPACITIES. 210
DIMENSIONS. 210
VEHICLE WEIGHTS 211
TOWING WEIGHTS 212

WWW.MANUALS.WS

WWW.MANUALS.WS

WWW.MANUALS.WS

WWW.MANUALS.WS

LUBRICANTS AND FLUIDS

Recommendations for all climates and conditions.

NOTE: *Recommended oils are complete in themselves and additives should not be used.*

NOTE: *It is essential to change oil much more frequently if the vehicle is operated under severe conditions, especially if deep wading is carried out.*

Engine oil

Use a 0W/40, 5W/40 or 10W/40 oil meeting API service level SJ or ACEA A3 synthetic and having a viscosity band recommended for the temperature range of your locality.

Engine oil temperature ranges

0W/40 will protect from -22ºF (-30ºC) to 122ºF (50ºC).

5W/40 will protect from -22ºF (-30ºC) to 122ºF (50ºC).

10W/40 will protect from 14ºF (-10ºC) to 122ºF (50ºC).

Engine oil brands

Brand	Grade
Castrol Syntec Full Synthetic	5w/50
Mobil 1	0w/40
Phillips 66 TropArtic 100% Synthetic	5w/50
Quaker State Ultra Premium Full synthetic	5w/50
Texaco Havoline Formula 3 Synthetic Motor Oil	5w/40
Valvoline SynPower Full Synthetic Motor Oil	5w/40
Only these engine oils of the grades shown above are approved for use in Freelander engines. Similarly named oils of a different grade to that shown must NOT be used...	

Automatic gearbox

Use Texaco ATF N402 oil.

Intermediate Reduction Drive

API GL5 + MT1

Rear Differential

API GL5.

Power steering

Use ATF Dextron III.

WWW.MANUALS.WS

WWW.MANUALS.WS

Brake reservoir
'Shell Donax YB' brake fluid conforming to DOT 4 specification. If this fluid is not available use a universal brake fluid or any brake fluid having a minimum boiling point of 500°F (260°C) and complying with FMVSS 116 DOT4.

Windscreen washers
Windscreen washer solvent.

Engine cooling system
Use Havoline Extended Life Coolant (XLC), or any ethylene glycol based anti-freeze (containing no methanol) with only Organic Acid Technology (OAT) corrosion inhibitors. Use one part anti-freeze to one part water for protection down to -33°F (-36° C).

Air conditioning compressor oil
Nippondenso ND-8.

Air conditioning refrigerant
R134A.

Inertia reel seat belts
DO NOT LUBRICATE. These components are lubricated for life during manufacture.

Battery terminals
Petroleum jelly. DO NOT use silicone grease.

Door locks
Use door lock and latch lubricant, Part No. VWN16075

WWW.MANUALS.WS

WWW.MANUALS.WS

ENGINES

2.5 liter gasoline

Fuel	Unleaded gasoline with a CLC or AKI octane rating of 87minimum (see *'TYPE OF FUEL', page 98*).
Capacity	2497 cm^3
Firing order	1-6-5-4-3-2
Idle speed	750 ± 50 rev/min
Bore	80 mm (3.15 in)
Stroke	82.8 mm (3.26 in)
Number of cylinders	6 V-arrangement
Compression ratio	10.5:1
Ignition system	Siemens engine management system
Spark plugs	GSP 66527
Spark plug gap	1.0 mm ± 0.05

ELECTRICAL

Battery type:	H6 sealed for life
Battery rating:	75 amp/hr
Voltage and polarity	12 V, negative (-) earth

STEERING GEOMETRY

Track:	
- Front	60.4 in (1534 mm)
- Rear	60.8 in (1545 mm)
Turning circle	38 ft 1.2 in (11.6 m)
Steering wheel turns lock to lock	3.16
Wheel alignment:	
- Front (toe out)	20' ± 15"
- Rear (toe in)	20' ± 15"

WWW.MANUALS.WS

WWW.MANUALS.WS

WHEELS & TIRES

WARNING

- ***ALWAYS use the same make and type of radial-ply tires front and back. DO NOT use bias-ply tires, or interchange tires from front to back.***
- ***For optimum performance and handling, ALWAYS replace tires with the same make and type as those fitted from new at the factory. If these tires are not available, consult your retailer for advice on Land Rover approved alternatives. Failure to do so may adversely affect vehicle handling.***
- ***NEVER drive your vehicle if the tires are badly worn, cut or damaged, or if the pressures are incorrect.***
- ***Incorrectly inflated tires wear rapidly and can seriously affect the vehicle's safety and road handling characteristics.***
- ***Your vehicle is fitted with tubeless road wheels that will NOT accept inner tubes. DO NOT fit a tube tire.***
- ***ONLY Land Rover approved wheel and tire combinations should be fitted to the vehicle.***

Wheel size and type

Type	Size
Steel wheels:	5.5J x 15
Alloy wheels:	
15" wheels	5.5J x 15
16" wheels	6.0J x 16
17" wheels	7.0J x 17
Road wheel nut torque	84 lbf/ft (115 Nm)
Spare wheel nut torque	33 lbf/ft (45 Nm)

Tire specification

Wheel size	Tire
5.5J x 15 (steel & alloy)	195/80 R15 'Multi terrain' tire
6.0J x 16 (alloy)	215/65 R16 'Multi terrain' tire
7.0J x 17 (alloy)	225/55 R17 'Multi terrain' tire

WWW.MANUALS.WS

WWW.MANUALS.WS

TIRE PRESSURES

	Tire pressures - lbf/in^2 (kPa)	
All driving conditions (all tire sizes)	Front & Rear	30 (206)

NOTE: *The pressure for your spare tire should be set to the highest value given for your vehicle's wheel/tire size combination, and adjusted after fitment.*

NOTE: *When towing a heavily laden trailer, tire pressures should be increased to the maximum specified in the handbook, and road speeds limited to 60 mph (100 km/h).*

Tire inflation pressure
It is important that tires be properly inflated. Air pressure enables a tire to support the vehicle load, so proper inflation is critical. Failure to maintain correct inflation pressures may result in rapid and uneven tread wear, erratic vehicle handling and excessive heat build-up, which may result in tire failure.

It is impossible to determine if a tire is properly inflated just by looking at it.

Tire pressures listed on the vehicle certification label are considered to be the recommended cold tire inflation pressure, at maximum gross vehicle weight condition, measured when the tires are **cold**, after the vehicle has been parked for at least 3 hours or driven less than 3 miles (5 km). Tire pressures at normal opertaing conditions are shown in the table above.

When you drive for more than 3 miles (5 km), the tires, and the air inside them, warm up and it is normal for the tire pressure to increase above the recommended cold pressure. When checking tire pessure in this condition, never 'bleed' or reduce air pressure.

WARNING

If the vehicle has been parked in strong sunlight or used in high ambient temperatures, DO NOT reduce tire pressures; instead, move the vehicle into the shade and allow the tires to cool before checking.

NOTE: *A hot tire at or below recommended cold inflation pressure is dangerously under-inflated.*

WWW.MANUALS.WS

WWW.MANUALS.WS

CAPACITIES

Fuel tank (usable)	16.9 US gallons (64 liters)
Engine oil (and filter) refill: Automatic gearbox refill:	5.5 US quarts (5.2 liters) 4.33 US quarts (4.1 liters)
Cooling system fill from dry: Washer reservoir	8.25 US quarts (7.8 liters) 4.23 US quarts (4.0 liters)

DIMENSIONS

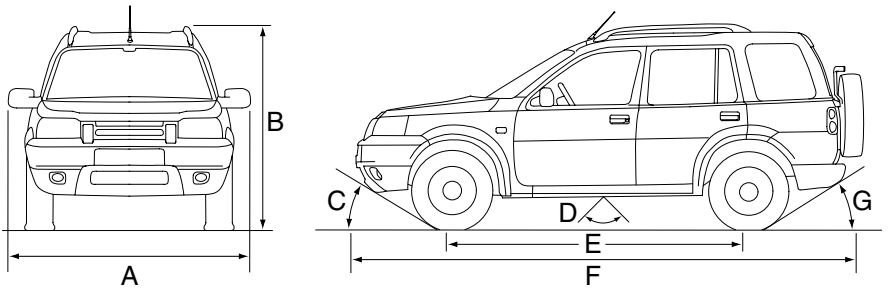

H3485

F	Overall length (inc. 195/80 spare wheel/tire):	14 ft 6.5 in (4433 mm)
F	Overall length (inc. 215/65 spare wheel/tire):	14 ft 7.5 in (4459 mm)
A	Overall width (inc. mirrors)	6 ft 9.4 in (2068 mm)
B	Overall height†(excl. roof bars and cross rails)	5 ft 7.2 in (1708 mm)
B	Overall height† (inc. roof bars and cross rails):	5 ft 11.9 in (1828 mm)
E	Wheelbase	8 ft 4.7 in (2557 mm)
	Ground clearance (minimum)†	7.3 in (186 mm)
	Wading depth (maximum)	15.7 in (400 mm)
C	Max. approach angle†	30.5°
G	Max. departure angle (with towbar)†	23.6°
G	Max. departure angle (without towbar)†	33.9°
D	Max. breakover angle	24°
	† With 215/65 tires at curb weight plus a 165 lb (75 kg) driver	

WWW.MANUALS.WS

WWW.MANUALS.WS

VEHICLE WEIGHTS

DEFINITIONS:

- **Curb Weight:** minimum unladen vehicle weight plus a full fuel tank.
- **Gross Vehicle Weight:** maximum permissible weight of vehicle with driver, passengers, payload equipment and towing attachment load (where applicable)

3-door Model

Curb wt	3671 - 3688 lb (1665 - 1673 kg)	Max. front axle load	2381 lb (1080 kg)
Max gross vehicle wt	4541 lb (2060 kg)	Max rear axle load	2469 lb (1120 kg)

5-door Model S

Curb wt	3571 - 3664 lb (1620 - 1662 kg)	Max. front axle load	2381 lb (1080 kg)
Max gross vehicle wt	4541 lb (2060 kg)	Max rear axle load	2469 lb (1120 kg)

5-door Model SE

Curb wt	3638 - 3660 lb (1650 - 1660 kg)	Max. front axle load	2381 lb (1080 kg)
Max gross vehicle wt	4541 lb (2060 kg)	Max rear axle load	2469 lb (1120 kg)

5-door Model HSE

Curb wt	3660 - 3673 lb (1660 - 1666 kg)	Max. front axle load	2381 lb (1080 kg)
Max gross vehicle wt	4541 lb (2060 kg)	Max rear axle load	2469 lb (1120 kg)

NOTE: *The maximum axle weights are individual axle loadings. Loading both axles to their respective maximums MUST BE AVOIDED, as the overall maximum vehicle weight would then be exceeded. The individual maximum axle weights and gross vehicle weight must not be exceeded.*

WWW.MANUALS.WS

WWW.MANUALS.WS

TOWING WEIGHTS

Max. trailer weight Max tongue weight Gross train weight	2500 lb (1134 kg) 250 lb (113 kg) 7041 lb (3194 kg)
Max roof rack load	154 lb (70 kg)
† To increase stability, it is recommended that you adjust the tongue weight to the maximum limit, when loading to the maximum trailer weight.	

WWW.MANUALS.WS

Index

WWW.MANUALS.WS

A

Accessories 177
Aerial 90
Air blower control 77
Air cleaner element renewal 156
Air conditioning 77
  maintenance 80
  operation 80
Air distribution control 78
Air recirculation control 77
Air temperature control 77
Air vents 79
Airbag SRS
  disposal 54
  location 49
  operation 51
  precautions 49
  servicing 53
  warning light 52
Alarm 27
Alarm indicator light 29
Anti-freeze 159
Anti-lock braking (ABS) 115
Ashtray 86
Audible warnings 62
Audio equipment 90
Auxiliary power socket 87

B

Baby seats 45
Battery
  charging 167
  disposal 166
  maintenance 165
  remove & replace 166
  specification 207
Booster cables 185
Brake fluid
  check & top-up 160
Brakes
  anti-lock brakes (ABS) 115
  brake pads 113
  foot brake 112
  handbrake 114
  servo assistance 112
  warning light 113, 116
Breakdown recovery 187
Breaking-in 24
Bulb replacement 194

C

Capacities 210
Catalytic converter 101
CD autochanger 90
Child restraints
  LATCH anchorages 48
  tether straps 47
Child seats 45, 53
Child seats for larger children 45
Child-proof door locks 31
Cigar lighter 87
Cleaning (exterior) 173
Cleaning (interior) 175
Clock 82
Cold climates 94
CommandShift transmission 103
Controls
  fascia 8
  fascia switches 13
  instrument panel 9
Coolant
  check & top-up 158
  replacement 147
  specification 159
Cooling system 158
Courtesy lights
  bulb replacement 199, 200
  operation 82
Cruise control 110
Cup holders 85

D

Data 207
Daylight running lights
  operation 11
Defrosting 79
Demisting 78
Digital display 57
Dimensions 210
Dipstick 153
Direction indicators
  bulb replacement (front) 196
  bulb replacement (rear) 198
  operation 63
Distance recorder 57
Door handles (interior) 30
Door locking cut-off switch 32

WWW.MANUALS.WS

Door mirrors 69
Door sill locking buttons 30
Drinks stowage 84, 85
Driver's storage 83
Driving 95, 102, 106

E

Electronic traction control 117
Emergency starting 185
Emergency towing 187
Emission control system 97, 150
Engine
  compartment 152
  fuse box 192
  oil check & top-up 153
  specifications 207
  starting 94
  warming-up 95, 141
Engine immobilisation 31
Engine oil
  disposal (used oil) 149, 154
  drain & refill 154
  filter renewal 155
  specification 7
Exterior mirrors 69

F

Face level vents 79
Fascia switches 13
Fluid specifications 205
Foot brake 112
Fresh air vents 79
Fuel
  cut-off switch 100
  economy 96, 143
  empty tank 100
  filling 99
  filling difficulties 100
  gauge 56
  safety 99
  specification 7, 98
  tank capacity 7, 210
Fuel gauge 9
Fuse box (supplementary) 193
Fuses 189

G

Gauges
  fuel 56
  speedometer 56
  tachometer 56
  temperature 56
Gearbox (automatic) 103
  automatically selected modes 107
  display 57
  'kick-down' 106
  lever positions 104
  selector release button 103
  Sport mode 104
  starting 105
General data 205
Glovebox 83
Glovebox light
  bulb replacement 201
  operation 83
Ground clearance 133, 210

H

Handbrake 114
Handset
  battery replacement 33
  operation 28
  replacement 27
  resynchronise 33
Hardback
  fitting and removal 118
Hazard warning lights 64
Head restraints 37
Headlights 63
  bulb replacement 195
  main beam 64
  operation 11, 63
Heated rear windshield 77
Heated seats 81
Heater controls 14, 77
Heating 78
Height
  vehicle 95
High mounted stop light
  bulb replacement 198
Hill descent control (HDC) 108
Hood 151
Horn 68

WWW.MANUALS.WS

Index

WWW.MANUALS.WS

I

Ignition switch 93
Immobilisation 31
In-car entertainment 90
Indicators
  bulb replacement 196
  operation 63
Inertia switch 32, 100
Information labels 19
Instrument illumination control 58
Instrument panel 9
  digital display 57
  instruments 56
  warning lights 59
Interior (cleaning) 175
Interior lights
  bulb replacement 199, 200
  operation 82
Interior mirror 70

J

Jacking the vehicle 183
Jump leads 185

K

Key replacement 27
Kick-down 106

L

Labels 19
Lashing rings 188
LATCH child restraint anchorages 48
Lights (exterior)
  direction indicators 63
  side, tail, headlights 11, 63
Lights (interior)
  courtesy 82
  map-reading 82
Load carrying
  loading weights 125
  lockable stowage box 124
  long loads 38
  luggage anchor points 124
  luggage space (maximum) 39
  rear seat folding 38
  roof rack 125
Loadspace cover 88
Loadspace light
  bulb replacement 201
  operation 82
Locking 28
Locking switch (interior) 30
Long distance towing 188
Lubricant specifications 205
Luggage anchor points 124
Luggage area 124

M

Maintenance 20, 147, 148
Map reading lights
  bulb replacement 199
  operation 82
Mileometer 57
Mirrors (exterior)
  adjustment 69
  folding 69
Mirrors (interior) 70
Mislock 29
Mobile phones 89

N

Navigation system 90
Number plate lights (bulb replacement) 199

O

Odometer 9, 57
Off-road driving 116, 131
Oil (engine)
  check & top-up 153
  disposal 149, 154
  drain & refill 154
  filter renewal 155
  specification 7, 153
Owner maintenance 148

P

Parking 95
Parts & accessories 177
Passengers' storage 84
Poisonous fluids 149
Polishing (bodywork) 174
Power socket 87
Power steering top-up* 161
Pre-tensioners 43
Pre-tensionsers
  servicing 43

WWW.MANUALS.WS

Punctured tires 170

R

Radio/cassette player 90
aerial 90
display 82
remote controls 90
Reading lights 82
Rear lights (bulb replacement) 197
Rear seats 38
Rear windshield
operation 72
Rear windshield demister 77
Rear windshield washers 67
Rear windshield wipers 67
Rear-view mirror 70
Recovery (of vehicle) 187
Remote audio controls 90
Remote handset battery 33
Reverse lights (bulb replacement) 197
Road testing on dynamometers 150
Roof bars
fitting 122
removal 121
Roof rack 125
Running-in 96

S

Safety in the garage 149
Safety on the forecourt 99
Screenwash 162
Seat belt
adjustment 42
care 44
child seat locking mechanism 46
operation 41
pre-tensioners 43
safety 40
testing 44
Seat belt pretensionsers
servicing 43
Seat heaters 81
Seats
child seats 45, 53
front 36
heated 81
rear - folding 38
Security box 124
Selector lever 103
Service portfolio book 20, 147
Servicing 147, 148
Servo assistance 112
Sidelights
bulb replacement 195
operation 11, 63
Side-repeater light (bulb replacement) 196
Single point entry 30
Snow chains 172
Spare wheel (removing) 182
Spark plugs 157
Speedometer 9, 56
Sport mode 104
Starter switch 93
Starting 94, 101
automatic models 105
emergency 185
warming-up the engine 141
Steering column
adjustment 55
lock 93
Steering data 207
Stop lights (bulb replacement) 198
Storage
passengers' 84
Stowage box 124
Sun visor 86
Sunroof 73
Superlocking 29

T

Tachometer 9, 56
Tail lights
bulb replacement 198
operation 11, 63
Taildoor
operation 35
Taildoor glass
operation 72
recalibration 72
Targa roof 74
T-bar - removal 75
Technical data 205, 207
Telephones 89
Temperature gauge 9, 56
Tether straps 47

WWW.MANUALS.WS

WWW.MANUALS.WS

Tire
  pressures 169, 209
  punctures 170
  replacement 171
  specifications 208
  wear indicators 170
Tire pressures 7
Tool kit 181
Tow bars 126
Towing behind a Motorhome 188
Towing eyes 187
Towing for recovery 187
Towing long distance 188
Towing on severe inclines 127
Towing precautions 126
Towing weights 212
Traction control 117
Trailer hitch 127
Transporter or trailer lashing 188
Trip recorder 9
  display 57
  reset button 56

U

Unlocking 29

V

Vanity mirror 70
Vanity mirror (bulb replacement) 202
Vehicle identification number 176
Ventilation 76, 79

W

Wading 138
Warming-up (the engine) 141
Warning labels 19
Warning lights 59
  ABS 60
  Airbag SRS 61
  Battery charging 61
  Cruise control 59
  Direction indicators 59
  Door open 60
  Engine malfunction (diesel) 61
  Engine malfunction (petrol) 59
  Handbrake & brake system 60
  Hazard warning 60
  HDC 'failure' 60
  HDC 'information' 61
  Headlight main beam 59
  Low oil pressure 61
  overview 10
  Seat belt 61
  Traction control 60
Warnings (in handbook) 19
Warranty information 20
Washer fluid 162
Washer jets 163
Washers (windshield)
  operation 12
Washing (the bodywork) 173
Weights 211
Wheel changing
  jacking 183
  spare wheel 182
  tools 181
  wheel removal 184
Wheel sizes 208
Windows
  inhibit switch (rear) 71
  'one touch' down (driver's) 71
  operation 71
  taildoor 72
Windshield washers
  fluid top-up 162
  operation 12, 66
Windshield wipers
  blade replacement 164
  operation 12, 65
  variable delay 12, 66

WWW.MANUALS.WS