2018 ROGUE SPORT

OWNER'S MANUAL
and MAINTENANCE INFORMATION

For your safety, read carefully and keep in this vehicle.

Foreword

This manual was prepared to help you understand the operation and maintenance of your vehicle so that you may enjoy many miles of driving pleasure. Please read through this manual before operating your vehicle.

A separate Warranty Information Booklet explains details about the warranties covering your vehicle. Additionally, a separate Customer Care/Lemon Law Booklet (U.S. only) will explain how to resolve any concerns you may have with your vehicle, as well as clarify your rights under your state's lemon law.

In addition to factory installed options, your vehicle may also be equipped with additional accessories installed by NISSAN or by your NISSAN dealer prior to delivery. It is important that you familiarize yourself with all disclosures, warnings, cautions and instructions concerning proper use of such accessories prior to operating the vehicle and/or accessory. It is recommended you see a NISSAN dealer for details concerning the particular accessories with which your vehicle is equipped.

Your NISSAN dealer knows your vehicle best. When you require any service or have any questions, we will be glad to assist you with the extensive resources available to us.

READ FIRST — THEN DRIVE SAFELY

Before driving your vehicle, read your Owner's Manual carefully. This will ensure familiarity with controls and maintenance requirements, assisting you in the safe operation of your vehicle.

WARNING

IMPORTANT SAFETY INFORMATION REMINDERS!

Follow these important driving rules to help ensure a safe and comfortable trip for you and your passengers!

- **NEVER drive under the influence of alcohol or drugs.**
- **ALWAYS observe posted speed limits and never drive too fast for conditions.**
- **ALWAYS give your full attention to driving and avoid using vehicle features or taking other actions that could distract you.**
- **ALWAYS use your seat belts and appropriate child restraint systems. Pre-teen children should be seated in the rear seat.**
- **ALWAYS provide information about the proper use of vehicle safety features to all occupants of the vehicle.**
- **ALWAYS review this Owner's Manual for important safety information.**

On-pavement and off-road driving

This vehicle will handle and maneuver differently from an ordinary passenger car because it has a higher center of gravity. As with other vehicles with features of this type, failure to operate this vehicle correctly may result in loss of control or an accident. Be sure to read "Avoiding collision and rollover" and "Driving safety precautions" in the "5. Starting and driving" section of this manual.

MODIFICATION OF YOUR VEHICLE

This vehicle should not be modified. Modification could affect its performance, safety or durability, and may even violate governmental regulations. In addition, damage or performance problems resulting from modification may not be covered under NISSAN warranties.

WARNING

Installing an aftermarket On-Board Diagnostic (OBD) plug-in device that uses the port during normal driving, for example remote insurance company monitoring, remote vehicle diagnostics, telematics or engine reprogramming, may cause interference or damage to vehicle systems. We do not recommend or endorse the use of any aftermarket OBD plug-in devices, unless specifically approved by NISSAN. The vehicle warranty may not cover damage caused by any aftermarket plug-in device.

WHEN READING THE MANUAL

This manual includes information for all features and equipment available on this model. Features and equipment in your vehicle may vary depending on model, trim level, options selected, order, date of production, region or availability. Therefore, you may find information about features or equipment that are not included or installed on your vehicle.

All information, specifications and illustrations in this manual are those in effect at the time of printing. NISSAN reserves the right to change specifications, performance, design or component suppliers without notice and without obligation. From time to time, NISSAN may update or revise this manual to provide Owners with the most accurate information currently available. Please carefully read and retain with this manual all revision updates sent to you by NISSAN to ensure you have access to accurate and up-to-date information regarding your vehicle. Current versions of vehicle Owner's Manuals and any updates can also be found in the Owner section of the NISSAN website at https://owners.nissanusa.com/nowners/navigation/manualsGuide. If you have questions concerning any information in your Owner's Manual, contact NISSAN Consumer Affairs. See the NISSAN CUSTOMER CARE PROGRAM page in this Owner's Manual for contact information.

IMPORTANT INFORMATION ABOUT THIS MANUAL

You will see various symbols in this manual. They are used in the following ways:

WARNING

This is used to indicate the presence of a hazard that could cause death or serious personal injury. To avoid or reduce the risk, the procedures must be followed precisely.

CAUTION

This is used to indicate the presence of a hazard that could cause minor or moderate personal injury or damage to your vehicle. To avoid or reduce the risk, the procedures must be followed carefully.

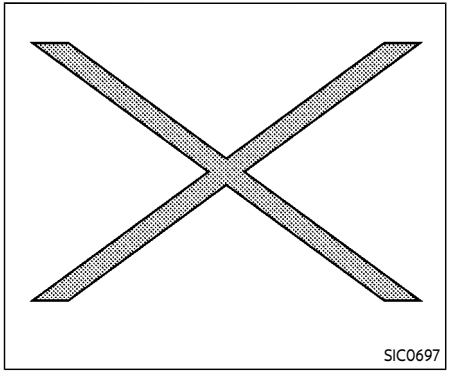

If you see the symbol above, it means **"Do not do this"** or **"Do not let this happen"**.

If you see a symbol similar to those above in an illustration, it means the arrow points to the front of the vehicle.

Arrows in an illustration that are similar to those above indicate movement or action.

Arrows in an illustration that are similar to those above call attention to an item in the illustration.

CALIFORNIA PROPOSITION 65 WARNING

WARNING

Engine exhaust, some of its constituents, and certain vehicle components contain or emit chemicals known to the State of California to cause cancer and birth defects or other reproductive harm. In addition, certain fluids contained in vehicles and certain products of component wear contain or emit chemicals known to the State of California to cause cancer and birth defects or other reproductive harm.

Operating, servicing and maintaining a passenger vehicle or off-road vehicle can expose you to chemicals including engine exhaust, carbon monoxide, phthalates, and lead, which are known to the State of California to cause cancer and birth defects or other reproductive harm. To minimize exposure, avoid breathing exhaust, do not idle the engine except as necessary, service your vehicle in a well-ventilated area and wear gloves or wash your hands frequently when servicing your vehicle. For more information go to www.P65Warnings.ca.gov.

CALIFORNIA PERCHLORATE ADVISORY

Some vehicle parts, such as lithium batteries, may contain perchlorate material. The following advisory is provided: "Perchlorate Material - special handling may apply, see www.dtsc.ca.gov/hazardouswaste/perchlorate."

Bluetooth® is a trademark owned by Bluetooth SIG, Inc., and licensed to Visteon Corporation and Robert Bosch GmbH.

SiriusXM® services require a subscription after trial period and are sold separately or as a package. The satellite service is available only in the 48 contiguous USA and DC. SiriusXM® satellite service is also available in Canada: see www.siriusxm.ca.

© 2017 NISSAN MOTOR CO., LTD.

All rights reserved. No part of this Owner's Manual may be reproduced or stored in a retrieval system, or transmitted in any form, or by any means, electronic, mechanical, photocopying, recording or otherwise, without the prior written permission of Nissan Motor Co., Ltd.

NISSAN CUSTOMER CARE PROGRAM

NISSAN CARES ...

Both NISSAN and your NISSAN dealer are dedicated to serving all your automotive needs. Your satisfaction with your vehicle and your NISSAN dealer are our primary concerns. Your NISSAN dealer is always available to assist you with all your automobile sales and service needs.

However, if there is something that your NISSAN dealer cannot assist you with or you would like to provide NISSAN directly with comments or questions, please contact the NISSAN Consumer Affairs Department using our toll-free number:

For U.S. customers
1-800-NISSAN-1
(1-800-647-7261)
For Canadian customers
1-800-387-0122

The Consumer Affairs Department will ask for the following information:

- Your name, address, and telephone number
- Vehicle identification number (attached to the top of the instrument panel on the driver's side)
- Date of purchase
- Current odometer reading
- Your NISSAN dealer's name
- Your comments or questions

OR

You can write to NISSAN with the information at:

For U.S. customers
Nissan North America, Inc.
Consumer Affairs Department
P.O. Box 685003
Franklin, TN 37068-5003
or via e-mail at:
nnaconsumeraffairs@nissan-usa.com

For Canadian customers
Nissan Canada Inc.
5290 Orbitor Drive
Mississauga, Ontario L4W 4Z5
or via e-mail at:
information.centre@nissancanada.com

If you prefer, visit us at:

www.nissanusa.com (for U.S. customers) or

www.nissan.ca (for Canadian customers)

We appreciate your interest in NISSAN and thank you for buying a quality NISSAN vehicle.

Table of Contents

Illustrated table of contents	0
Safety — Seats, seat belts and supplemental restraint system	1
Instruments and controls	2
Pre-driving checks and adjustments	3
Heater, air conditioner, audio and phone systems	4
Starting and driving	5
In case of emergency	6
Appearance and care	7
Do-it-yourself	8
Maintenance and schedules	9
Technical and consumer information	10
Index	11

0 Illustrated table of contents

Seats, seat belts and Supplemental Restraint System (SRS) 0-2
Exterior front 0-3
Exterior rear 0-4
Passenger compartment 0-5
Cockpit 0-6
Instrument panel 0-7
Meters and gauges 0-8
Engine compartment 0-9
MR20DD engine model 0-9
Warning and indicator lights 0-10

SEATS, SEAT BELTS AND SUPPLEMENTAL RESTRAINT SYSTEM (SRS)

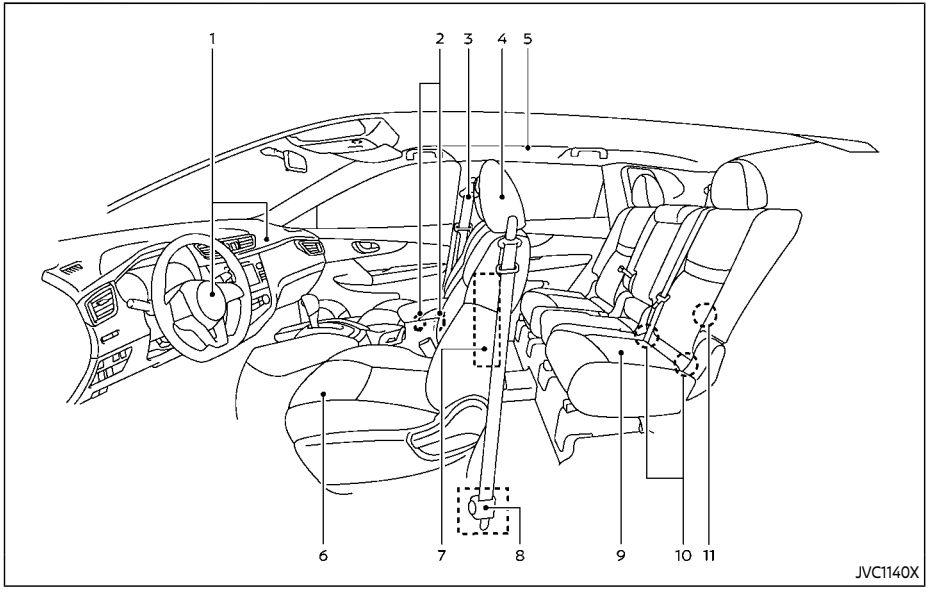

1. Supplemental front-impact air bags (P.1-40)
2. Occupant classification sensors (weight sensors) (P.1-40)
3. Seat belts (P.1-10)
4. Head restraints (P.1-6)
5. Roof-mounted curtain side-impact and rollover supplemental air bags (P.1-40)
6. Front seats (P.1-3)
7. Front seat-mounted side-impact supplemental air bags (P.1-40)
8. Seat belt pretensioner (P.1-55)
9. Rear seats (P.1-5)
   — Child restraints (P.1-20)
10. LATCH (Lower Anchors and Tethers for CHildren) system (for rear seats) (P.1-22)
11. Child restraint anchor point (for top tether strap) (P.1-36)

EXTERIOR FRONT

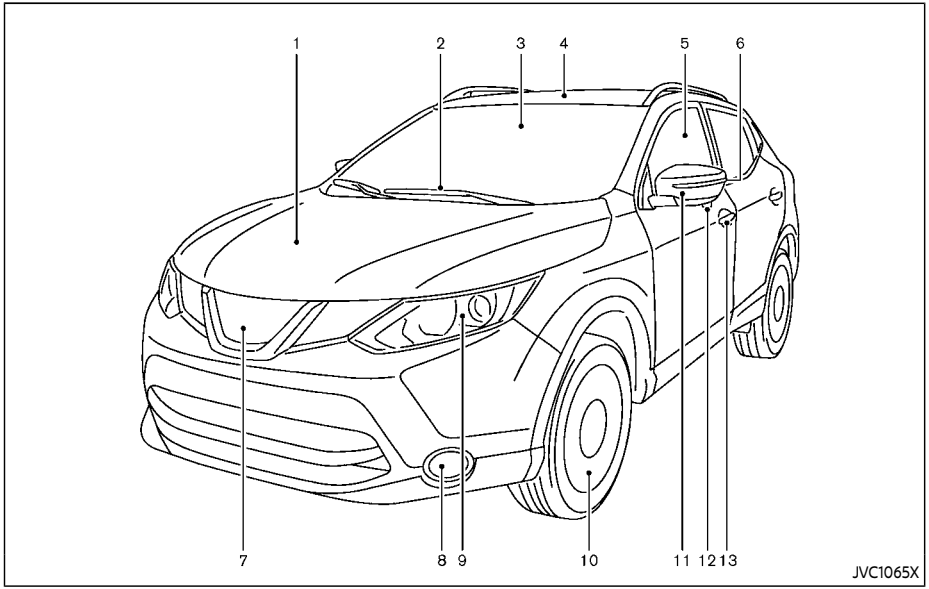

1. Hood (P.3-24)
2. Windshield wiper and washer
   — Switch operation (P.2-39)
   — Window washer fluid (P.8-10)
3. Front camera* (P.5-32, P.5-37, P.5-89)
4. Moonroof* (P.2-63)
5. Power windows (P.2-60)
6. Side turn signal light* (P.2-48)
7. Front view camera* (P.4-14)
8. Fog lights* (P.2-48)
9. Headlights and turn signal lights (P.2-43)
10. Tires
    — Wheels and tires (P.8-29, P.10-7)
    — Flat tire (P.6-3)
    — Tire Pressure Monitoring System (TPMS) (P.2-13, P.5-5)
11. Outside mirrors (P.3-31)
12. Side view camera* (P.4-14)
13. Doors
    — Keys (P.3-2)
    — Door locks (P.3-5)
    — Intelligent Key system* (P.3-11)
    — Remote keyless entry system* (P.3-8)
    — Security system (P.2-36)
    — Remote engine start* (P.3-22)

*: if so equipped

EXTERIOR REAR

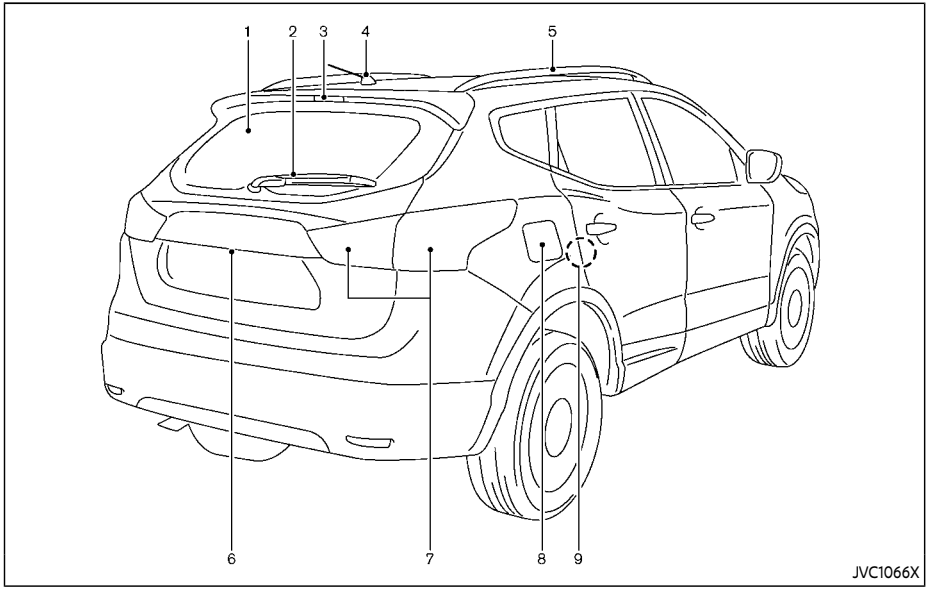

1. Rear window defroster (P.2-42)
2. Rear window wiper and washer
   — Switch operation (P.2-41)
   — Window washer fluid (P.8-10)
3. High-mounted stop light (P.8-25)
4. Antenna (P.4-77)
5. Roof rack* (P.2-59)
6. Liftgate (P.3-25)
   — Intelligent Key system* (P.3-11)
   — Remote keyless entry system* (P.3-8)
   — Rear view camera* (P.4-8, P.4-14)
7. Rear combination light (P.8-25)
8. Fuel-filler door (P.3-27)
   — Fuel information (P.10-3)
9. Child safety rear door locks (P.3-7)

*: if so equipped

PASSENGER COMPARTMENT

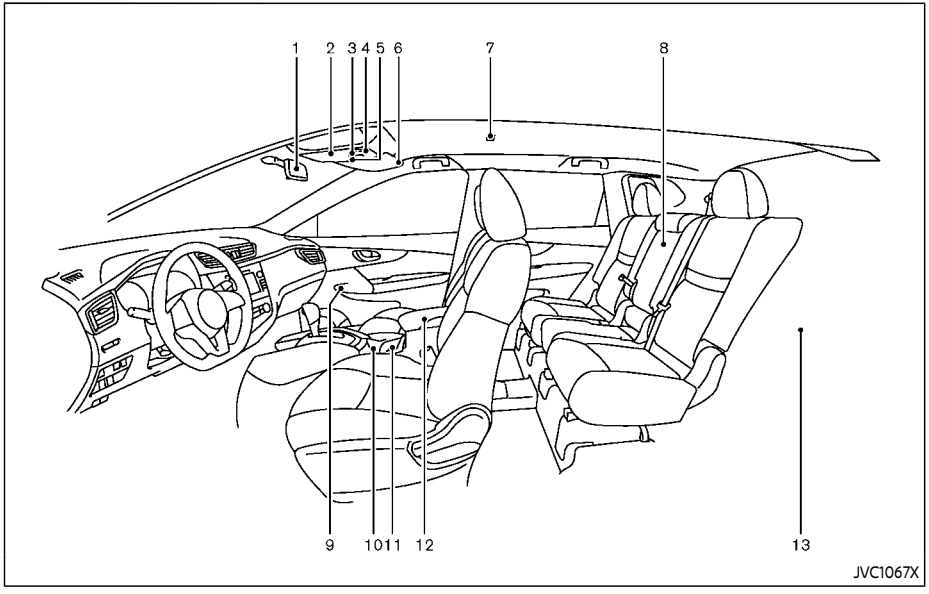

1. Inside mirror (P.3-31)
2. Sunglasses holder (P.2-56)
3. Map lights (P.2-65)
   — Microphone (P.4-83, P.4-93, P.4-103)
4. Moonroof switch* (P.2-63)
5. SOS call switch**
6. Sun visors (P.3-30)
7. Room light (P.2-66)
8. Rear armrest* (P.1-6)
   — Rear cup holders (P.2-54)
9. Door armrest
   — Power window switch (P.2-60)
   — Power door lock switch (P.3-7)
   — Outside rearview mirror remote control switch (Driver's side) (P.3-31)
10. Front cup holders (P.2-54)
11. Heated seat switch* (P.2-50)
12. Console box (P.2-56)
13. Cargo area
    — Storage (P.2-54)
    — Luggage hooks (P.2-57)
    — Parcel shelf (P.2-58)
    — Spare tire (P.6-3)
    — Cargo light (P.2-67)

*: if so equipped

**: Refer to the separate Navigation System Owner's Manual (if so equipped).

COCKPIT

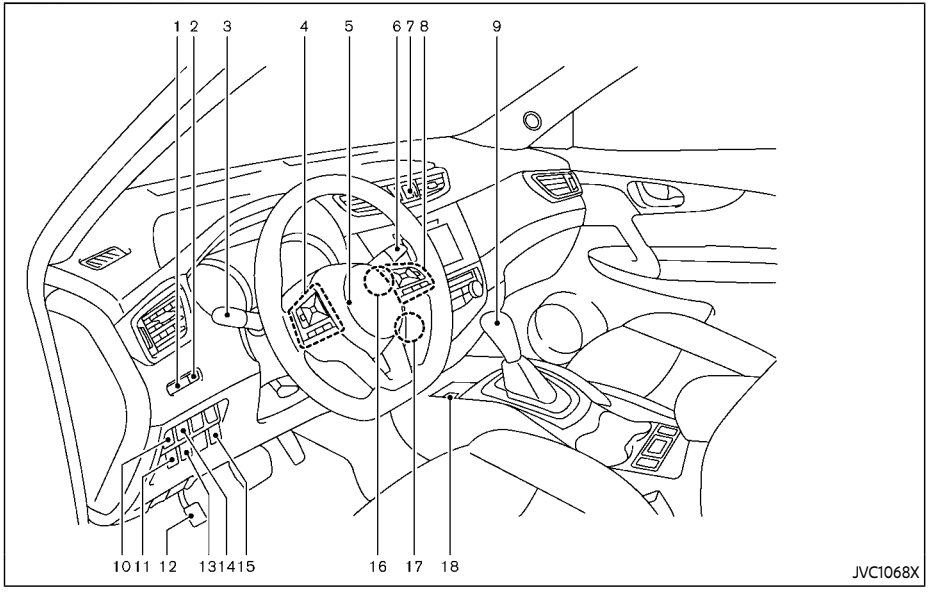

1. Instrument brightness control (P.2-9)
2. TRIP RESET switch (P.2-6)
3. Headlight and turn signal switch (P.2-43)/ Fog light switch* (P.2-48)
4. Steering-wheel-mounted controls (left side)
   — Audio control (P.4-75 or Navigation system**)
   — Vehicle information display control (P.2-19)
5. Steering wheel (P.3-29)
   — Horn (P.2-49)
6. Wiper and washer switch (P.2-39)
7. Hazard indicator flasher switch (P.6-2)
8. Steering-wheel-mounted controls (right side)
   — Cruise control switches* (P.5-60)
   — Intelligent Cruise Control (ICC) system* (P.5-62)
   — Bluetooth® Hands-Free Phone System (without navigation system)* (P.4-83)
   — Bluetooth® Hands-Free Phone System (with navigation system)* (P.4-93)
   — Voice Recognition system switch* (P.4-100)
   — Siri® Eyes Free (P.4-79)
9. Shift lever
   — Continuously Variable Transmission (CVT) (P.5-20)
   — Manual Transmission (MT) (P.5-25)
10. Vehicle Dynamic Control (VDC) OFF switch (P.2-52)
11. Heated steering wheel switch* (P.2-49)
12. Parking brake (Pedal type) (P.5-27)
13. Intelligent 4x4 LOCK switch* (P.2-52)
14. Intelligent Lane Intervention (I-LI) switch* (P.2-51, P.5-37) or Blind Spot Warning (BSW) switch* (P.2-51, P.5-42)
15. ECO switch (P.5-29)
16. Push-button ignition switch (model with Intelligent Key system) (P.5-14)
17. Ignition switch (model without Intelligent Key system) (P.5-12)
18. Parking brake (Switch type) (P.5-27)

*: if so equipped

**: See the separate Navigation System Owner's Manual (if so equipped).

INSTRUMENT PANEL

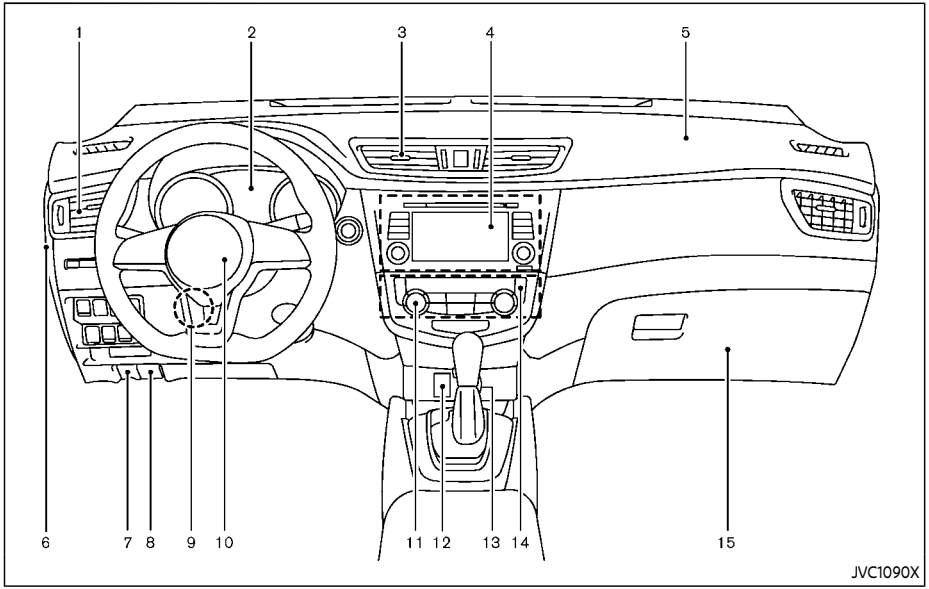

1. Side ventilator (P.4-29)
2. Meters and gauges (P.2-5)/Clock (P.2-36)
3. Center ventilator (P.4-29)
4. Audio system* (P.4-38) or Navigation system**
   — RearView Monitor* (P.4-8)
   — Intelligent Around View® Monitor* (P.4-14)
   — Bluetooth® Hands-Free Phone System* (P.4-83, P.4-93)
5. Front passenger supplemental air bag (P.1-40)
6. Fuse box cover (P.8-20)
7. Fuel-filler door release handle (P.3-27)
8. Hood release handle (P.3-24)
9. Steering wheel lock lever (P.3-29)
10. Driver's front-impact air bag (P.1-40)/Horn (P.2-49)
11. Heater/air conditioner control (P.4-30)
12. Auxiliary input jack (P.4-62) and USB connection port (P.4-59, P.4-69)
13. Power outlet (P.2-53)
14. Defroster switch (P.2-42)
15. Glove box (P.2-56)

*: if so equipped

**: See the separate Navigation System Owner's Manual (if so equipped).

METERS AND GAUGES

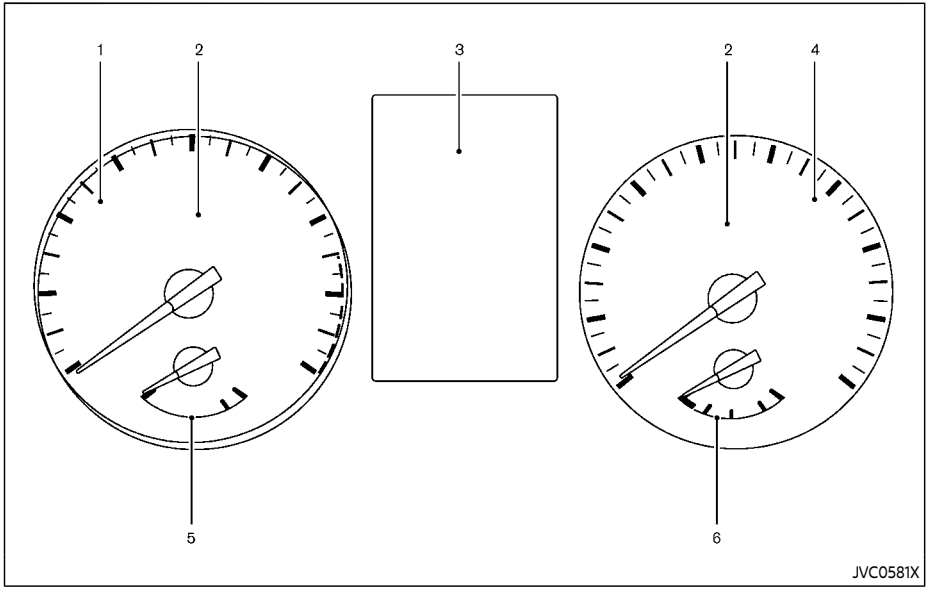

1. Tachometer (P.2-7)
2. Warning/indicator lights (P.2-10)
3. Vehicle information display (P.2-18)
   — Odometer/twin trip odometer (P.2-6)
4. Speedometer (P.2-6)
5. Engine coolant temperature gauge (P.2-7)
6. Fuel gauge (P.2-8)

ENGINE COMPARTMENT

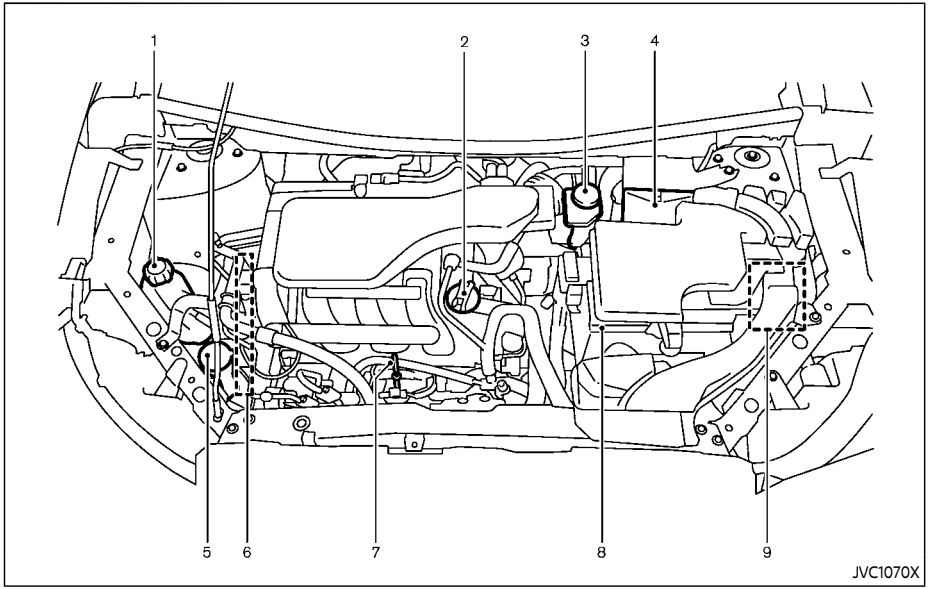

MR20DD ENGINE MODEL

1. Engine coolant reservoir (P.8-5)
2. Engine oil filler cap (P.8-6)
3. Brake and clutch* fluid reservoir (P.8-9)
4. Air cleaner (P.8-15)
5. Window washer fluid reservoir (P.8-10)
6. Drive belt (P.8-13)
7. Engine oil dipstick (P.8-6)
8. Battery (P.8-11)
9. Fuse/fusible link box (P.8-18)

*: For Manual Transmission (MT) Model

WARNING AND INDICATOR LIGHTS

Warning light	Name	Page
ABS	Anti-lock Braking System (ABS) warning light	2-10
BRAKE	Brake warning light (red)	2-11
	Charge warning light	2-11
	Electric power steering warning light	2-12
	Electronic parking brake system warning light (yellow) (if so equipped)	2-12
	Electronic parking brake warning light (if so equipped)	2-12
	Automatic Emergency Braking (AEB) system warning light (if so equipped)	2-12
	Low tire pressure warning light	2-13
	Master warning light	2-14
	Seat belt warning light	2-15
	Supplemental air bag warning light	2-15
	Vehicle Dynamic Control (VDC) warning light	2-15

Indicator light	Name	Page
AWD LOCK	All-Wheel Drive (AWD) LOCK indicator light (if so equipped)	2-16
	Exterior light indicator	2-16
	Front fog light indicator light (if so equipped)	2-16
	High beam assist indicator light (if so equipped)	2-16
	High beam indicator light	2-16
	Malfunction Indicator Light (MIL)	2-16
	Security indicator light	2-17
	Turn signal/hazard indicator lights	2-17
OFF	Vehicle Dynamic Control (VDC) off indicator light	2-17

1 Safety — Seats, seat belts and supplemental restraint system

Seats 1-2
Front seats 1-3
Rear seats 1-5
Armrest (if so equipped) 1-6
Head restraints/headrests 1-6
Adjustable head restraint/headrest components 1-7
Non-adjustable head restraint/headrest components 1-8
Remove 1-8
Install 1-8
Adjust 1-9
Seat belts 1-10
Precautions on seat belt usage 1-10
Seat belt warning light 1-13
Pregnant women 1-13
Injured persons 1-13
Three-point type seat belt with retractor 1-13
Seat belt extenders 1-16
Seat belt maintenance 1-16
Child safety 1-17
Infants 1-18
Small children 1-18
Larger children 1-18
Child restraints 1-20
Precautions on child restraints 1-20
Lower Anchors and Tethers for CHildren (LATCH) system 1-22
Rear-facing child restraint installation using LATCH 1-25
Rear-facing child restraint installation using the seat belts 1-27
Forward-facing child restraint installation using LATCH 1-29
Forward-facing child restraint installation using the seat belts 1-32
Booster seats 1-36
Supplemental Restraint System (SRS) 1-40
Precautions on SRS 1-40
NISSAN Advanced Air Bag System (front seats) 1-46
Front seat-mounted side-impact supplemental air bag and roof-mounted curtain side-impact and rollover supplemental air bag systems 1-54
Seat belts with pretensioners (front seats) 1-55
Supplemental air bag warning labels 1-56
Supplemental air bag warning light 1-57
Repair and replacement procedure 1-58

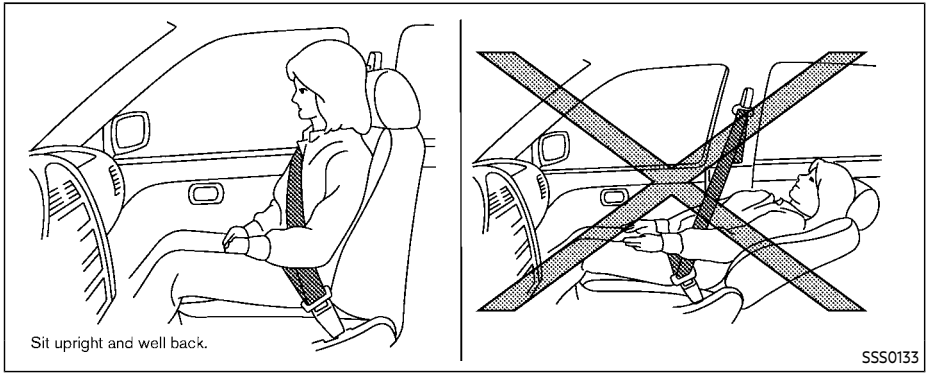

WARNING

- **Do not ride in a moving vehicle when the seatback is reclined. This can be dangerous. The shoulder belt will not be against your body. In an accident, you could be thrown into it and receive neck or other serious injuries. You could also slide under the lap belt and receive serious internal injuries.**
- **For the most effective protection when the vehicle is in motion, the seat should be upright. Always sit well back and upright in the seat with both feet on the floor and adjust the seat properly. See "Precautions on seat belt usage" (P.1-10).**
- **After adjustment, gently rock in the seat to make sure it is securely locked.**
- **Do not leave children unattended inside the vehicle. They could unknowingly activate switches or controls. Unattended children could become involved in serious accidents.**
- **To help avoid risk of injury or death through unintended operation of the vehicle and/or its systems, do not leave children, people who require the assistance of others or pets unattended in your vehicle. Additionally, the temperature inside a closed vehicle on a warm day can quickly become high enough to cause a significant risk of injury or death to people and pets.**
- **Do not adjust the driver's seat while driving so full attention may be given to vehicle operation. The seat may move suddenly and could cause loss of control of the vehicle.**
- **The seatback should not be reclined any more than needed for comfort. Seat belts are most effective when the passenger sits well back and straight up in the seat. If the seatback is reclined, the risk of sliding under the lap belt and being injured is increased.**

CAUTION

When adjusting the seat positions, be sure not to contact any moving parts to avoid possible injuries and/or damage.

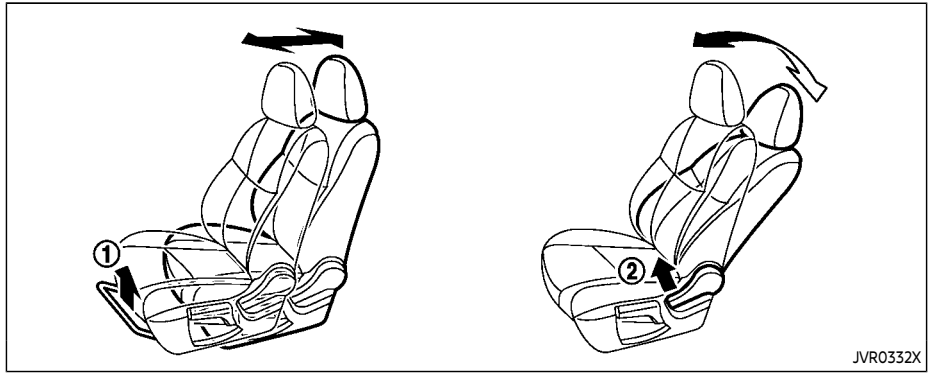

FRONT SEATS

Front manual seat adjustment

Forward and backward:

1. Pull up the adjusting lever ①.
2. Slide the seat to the desired position.
3. Release the adjusting lever to lock the seat in position.

Reclining:

1. Pull up the adjusting lever ②.
2. Tilt the seatback to the desired position.
3. Release the adjusting lever to lock the seatback in position.

The reclining feature allows the adjustment of the seatback for occupants of different sizes to help obtain the proper seat belt fit. (See "Seat belts" (P.1-10).)

The seatback may be reclined to allow occupants to rest when the vehicle is parked.

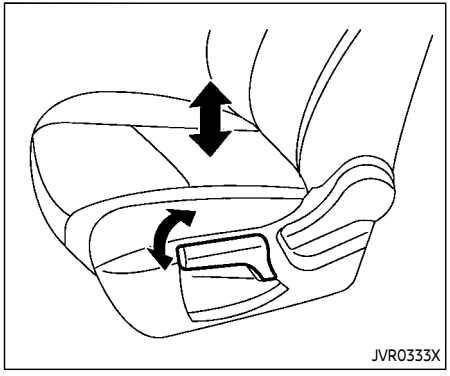

Seat lifter (if so equipped):

Pull up or push down the adjusting lever to adjust the seat height until the desired position is achieved.

Front power seat adjustment

Operating tips:

- The power seat motor has an auto-reset overload protection circuit. If the motor stops during the seat adjustment, wait 30 seconds, then reactivate the switch.
- To avoid discharge of the battery, do not operate the power seats for a long period of time when the engine is not running.

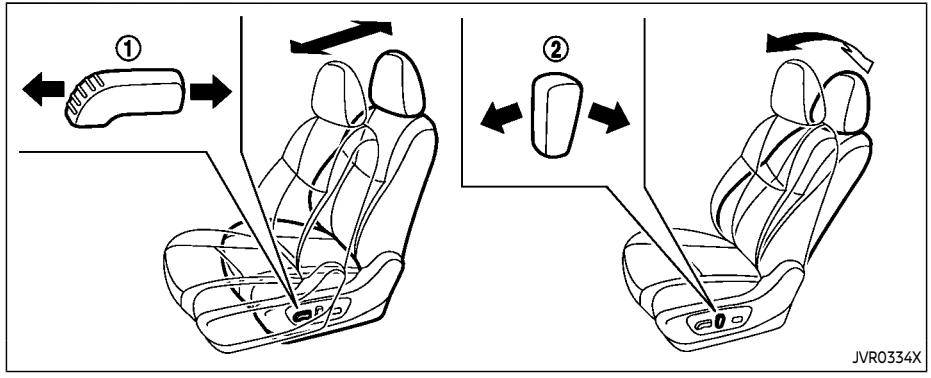

Forward and backward:

Move forward or backward the adjusting switch ① to the desired position.

Reclining:

Move forward or backward the adjusting switch ② to the desired position.

The reclining feature allows the adjustment of the seatback for occupants of different sizes to help obtain the proper seat belt fit. (See “Seat belts” (P.1-10).)

The seatback may be reclined to allow occupants to rest when the vehicle is parked.

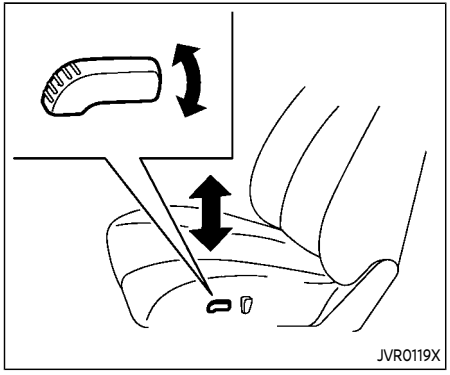

Seat lifter:

Move the switch as shown to adjust the seat height until the desired position is achieved.

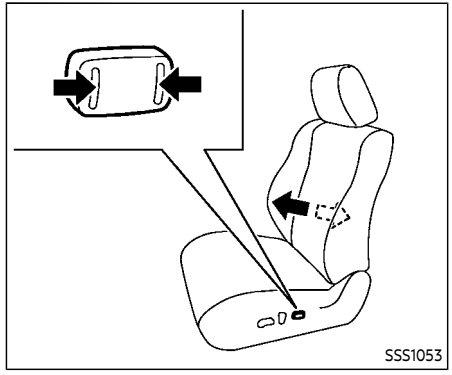

Lumbar support:

The lumbar support feature provides lower back support to the driver.

Push the switch as shown to adjust the seat lumbar area until the desired position is achieved.

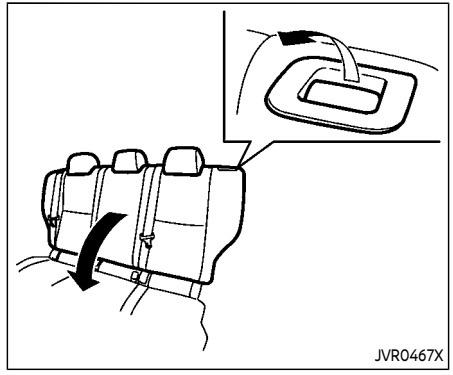

REAR SEATS

Folding

1. Pull up the lever and fold the seatback flat.
2. To return the seats to a seating position, push up on the seatback until it latches in place.

WARNING

- **Never allow anyone to ride in the cargo area or on the rear seats when they are in the fold-down position. Use of these areas by passengers without proper re-**

straints could result in serious injury in an accident or sudden stop.

- **Do not fold down the rear seats when occupants are in the rear seat area or any cargo is on the rear seats.**
- **Properly secure all cargo to help prevent it from sliding or shifting. Do not place cargo higher than the seatbacks.**
- **When returning the seatbacks to the upright position, be certain they are completely secured in the latched position. If they are not completely secured, passengers may be injured in an accident or sudden stop.**

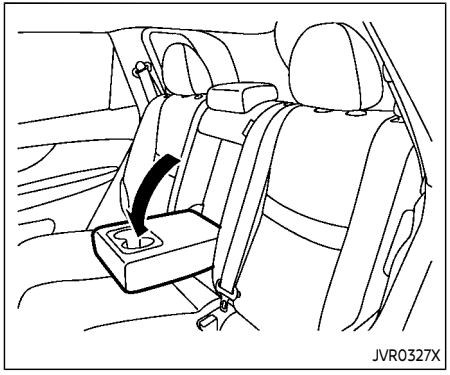

Rear seats

ARMREST (if so equipped)

Pull the armrest down as shown.

WARNING

Head restraint/headrest supplement the other vehicle safety systems. They may provide additional protection against injury in certain rear end collisions. Adjustable head restraints/headrests must be adjusted properly, as specified in this section. Check the adjustment after someone else uses the seat. Do not attach anything to the head restraint/headrest stalks or remove the head restraint/headrest. Do not use the seat if the head restraint/headrest has been removed. If the head restraint/headrest was removed, reinstall and properly adjust the head restraint/headrest before an occupant uses the seating position. Failure to follow these instructions can reduce the effectiveness of the head restraint/headrest. This may increase the risk of serious injury or death in a collision.

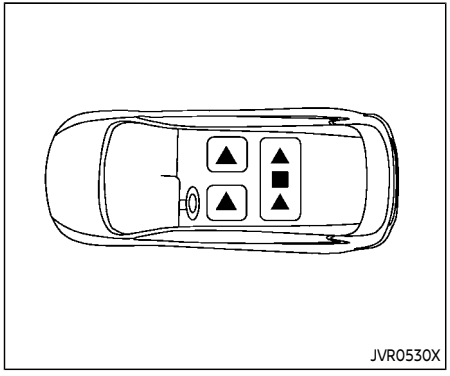

The illustration shows the seating positions equipped with head restraint/headrest.

▲ Indicates the seating position is equipped with a head restraint.

■ Indicates the seating position is equipped with a headrest.

+ Indicates the seating position is not equipped with a head restraint or headrest.

- Your vehicle is equipped with a head restraint/headrest that may be integrated, adjustable or non-adjustable.
- Adjustable head restraints/headrests have multiple notches along the stalk to lock them in a desired adjustment position.
- The non-adjustable head restraints/headrests have a single locking notch to secure them to the seat frame.
- Proper Adjustment:
  - For the adjustable type, align the head restraint/headrest so the center of your ear is approximately level with the center of the head restraint/headrest.
  - If your ear position is still higher than the recommended alignment, place the head restraint/headrest at the highest position.
- If the head restraint/headrest has been removed, ensure that it is reinstalled and locked in place before riding in that designated seating position.

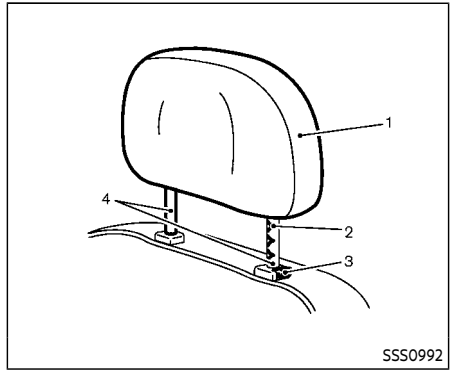

ADJUSTABLE HEAD RESTRAINT/ HEADREST COMPONENTS

1. Removable head restraint/headrest
2. Multiple notches
3. Lock knob
4. Stalks

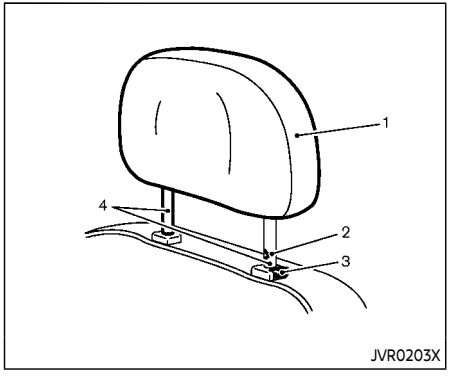

NON-ADJUSTABLE HEAD RESTRAINT/HEADREST COMPONENTS

1. Removable head restraint/headrest
2. Single notch
3. Lock knob
4. Stalks

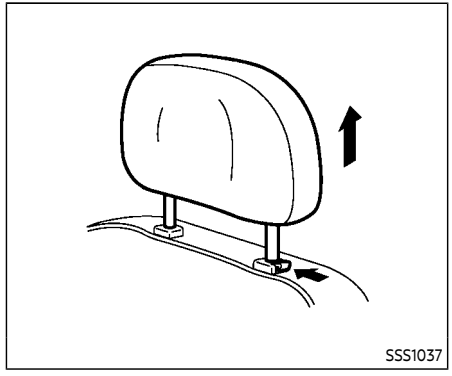

REMOVE

Use the following procedure to remove the head restraint/headrest.

1. Pull the head restraint/headrest up to the highest position.
2. Push and hold the lock knob.
3. Remove the head restraint/headrest from the seat.
4. Store the head restraint/headrest properly in a secure place so it is not loose in the vehicle.
5. Reinstall and properly adjust the head restraint/headrest before an occupant uses the seating position.

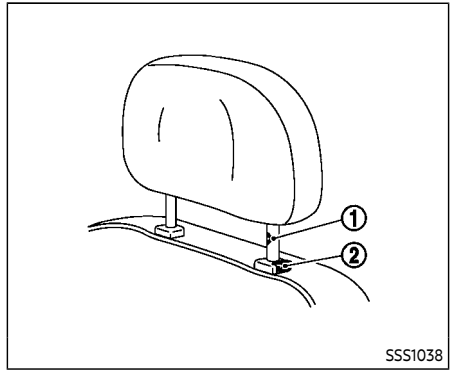

INSTALL

1. Align the head restraint/headrest stalks with the holes in the seat. Make sure that the head restraint/headrest is facing the correct direction. The stalk with the adjustment notch ① must be installed in the hole with the lock knob ②.
2. Push and hold the lock knob and push the head restraint/headrest down.
3. Properly adjust the head restraint/headrest before an occupant uses the seating position.

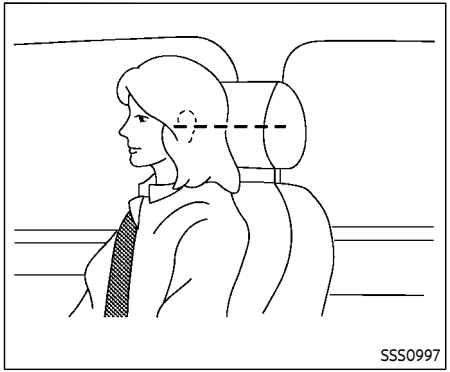

ADJUST

For adjustable head restraint/headrest

Adjust the head restraint/headrest so the center is level with the center of your ears. If your ear position is still higher than the recommended alignment, place the head restraint/headrest at the highest position.

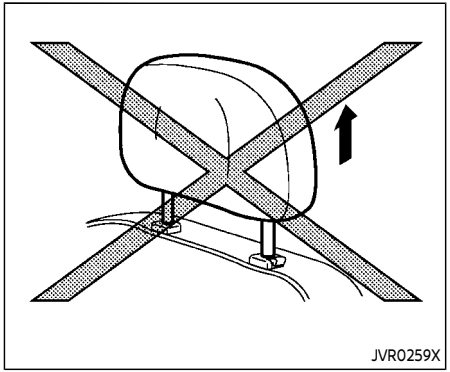

For non-adjustable head restraint/headrest

Make sure the head restraint/headrest is positioned so the lock knob is engaged in the notch before riding in that designated seating position.

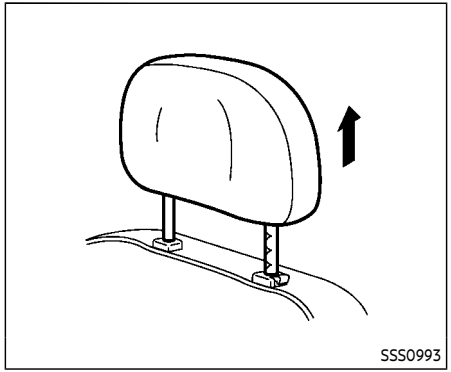

Raise

To raise the head restraint/headrest, pull it up.

Make sure the head restraint/headrest is positioned so the lock knob is engaged in the notch before riding in that designated seating position.

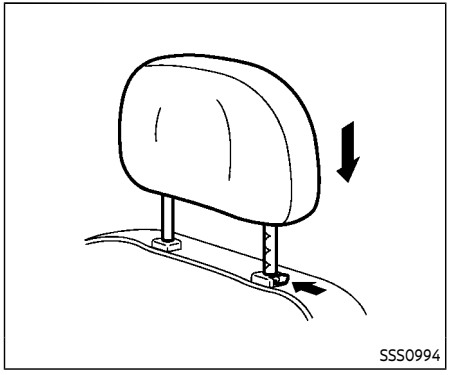

Lower

To lower, push and hold the lock knob and push the head restraint/headrest down.

Make sure the head restraint/headrest is positioned so the lock knob is engaged in the notch before riding in that designated seating position.

PRECAUTIONS ON SEAT BELT USAGE

If you are wearing your seat belt properly adjusted, and you are sitting upright and well back in your seat with both feet on the floor, your chances of being injured or killed in an accident and/or the severity of injury may be greatly reduced. NISSAN strongly encourages you and all of your passengers to buckle up every time you drive, even if your seating position includes a supplemental air bag.

Most U.S. states and Canadian provinces or territories specify that seat belts be worn at all times when a vehicle is being driven.

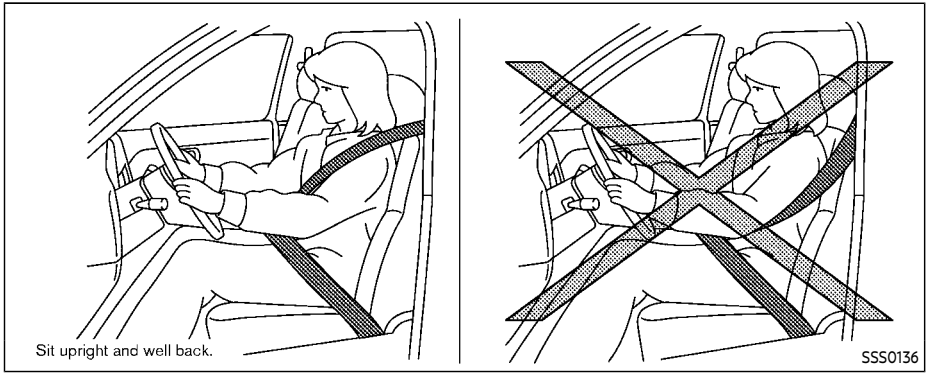
Sit upright and well back.
SSS0136

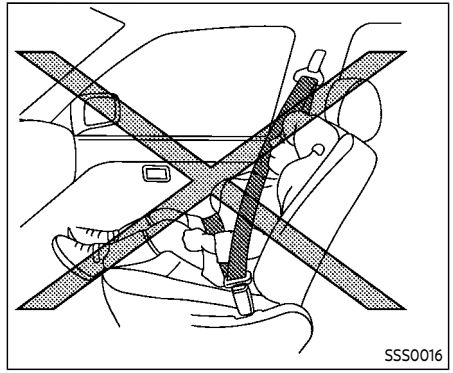
SSS0016

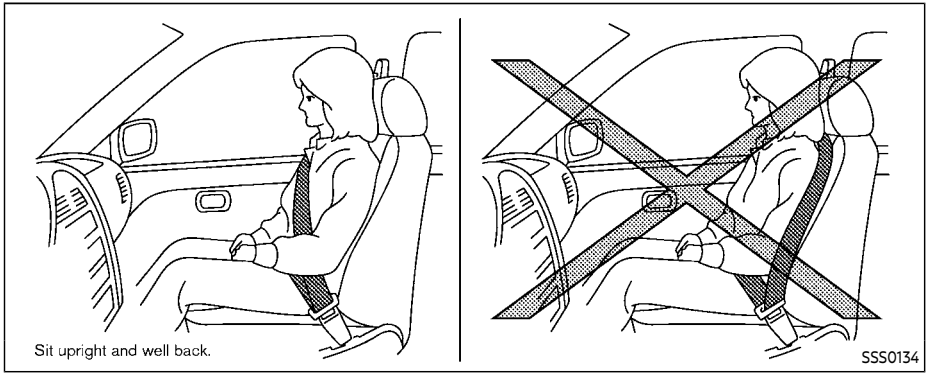
Sit upright and well back.
SSS0134

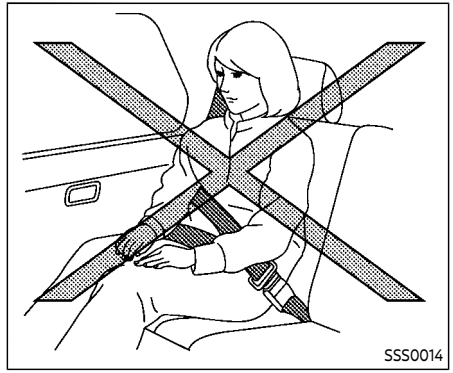
SSS0014

WARNING

- Every person who drives or rides in this vehicle should use a seat belt at all times. Children should be properly restrained in the rear seat and, if appropriate, in a child restraint.
- The seat belt should be properly adjusted to a snug fit. Failure to do so may reduce the effectiveness of the entire restraint system and increase the chance or severity of injury in an accident. Serious injury or death can occur if the seat belt is not worn properly.
- Always route the shoulder belt over your shoulder and across your chest. Never put the belt behind your back, under your arm or across your neck. The belt should be away from your face and neck, but not falling off your shoulder.
- Position the lap belt as low and snug as possible AROUND THE HIPS, NOT THE WAIST. A lap belt worn too high could increase the risk of internal injuries in an accident.
- Be sure the seat belt tongue is securely fastened to the proper buckle.
- Do not wear the seat belt inside out or twisted. Doing so may reduce its effectiveness.
- Do not allow more than one person to use the same seat belt.
- Never carry more people in the vehicle than there are seat belts.
- If the seat belt warning light glows continuously while the ignition is turned ON with all doors closed and all seat belts fastened, it may indicate a malfunction in the system. Have the system checked. It is recommended you visit a NISSAN dealer for this service.
- No changes should be made to the seat belt system. For example, do not modify the seat belt, add material, or install devices that may change the seat belt routing or tension. Doing so may affect the operation of the seat belt system. Modifying or tampering with the seat belt system may result in serious personal injury.
- Once a seat belt pretensioner has activated, it cannot be reused and must be replaced together with the retractor. It is recommended you visit a NISSAN dealer for this service.
- All seat belt assemblies, including retractors and attaching hardware, should be inspected after any collision. It is recommended you visit a NISSAN dealer for this service. NISSAN recommends that all seat belt assemblies in use during a collision be replaced unless the collision was minor and the belts show no damage and continue to operate properly. Seat belt assemblies not in use during a collision should also be inspected and replaced if either damage or improper operation is noted.
- All child restraints and attaching hardware should be inspected after any collision. Always follow the restraint manufacturer's inspection instructions and replacement recommendations. The child restraints should be replaced if they are damaged.

SEAT BELT WARNING LIGHT

Both the driver's and passenger's front seats are equipped with a seat belt warning light. The warning light, located in the meters and gauges area, will show the status of the driver and passenger seat belt.

NOTE:

The front passenger seat belt warning light will not illuminate if the seat is not occupied.

For additional information, refer to "Warning lights, indicator lights and audible reminders" (P.2-10).

PREGNANT WOMEN

NISSAN recommends that pregnant women use seat belts. The seat belt should be worn snug, and always position the lap belt as low as possible around the hips, not the waist. Place the shoulder belt over your shoulder and across your chest. Never put the lap/shoulder belt over your abdominal area. Contact your doctor for specific recommendations.

INJURED PERSONS

NISSAN recommends that injured persons use seat belts, depending on the injury. Check with your doctor for specific recommendations.

THREE-POINT TYPE SEAT BELT WITH RETRACTOR

WARNING

- **Every person who drives or rides in this vehicle should use a seat belt at all times. Children should be in the rear seats and in an appropriate restraint.**
- **Do not ride in a moving vehicle when the seatback is reclined. This can be dangerous. The shoulder belt will not be against your body. In an accident, you could be thrown into it and receive neck or other serious injuries. You could also slide under the lap belt and receive serious internal injuries.**
- **For the most effective protection when the vehicle is in motion, the seat should be upright. Always sit well back and upright in the seat with both feet on the floor and adjust the seat belt properly.**
- **Do not allow children to play with the seat belts. Most seating positions are equipped with Automatic Locking Retractor (ALR) mode seat belts. If the seat belt becomes wrapped around a child's neck with the ALR mode activated, the child can be seriously injured or killed if the seat belt retracts and becomes tight. This can occur even if the vehicle is parked. Unbuckle the seat belt to release the child. If the seat belt can not be unbuckled or is already unbuckled, release the child by cutting the seat belt with a suitable tool (such as a knife or scissors) to release the seat belt.**

Fastening the seat belts

1. Adjust the seat. (See "Seats" (P.1-2).)

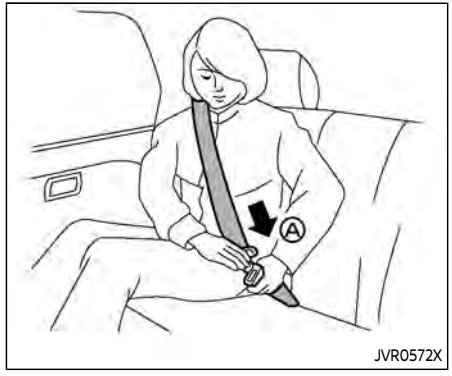

2. Slowly pull the seat belt out of the retractor and insert the tongue into the buckle Ⓐ until you hear and feel the latch engage.
   - **The retractor is designed to lock during a sudden stop or on impact. A slow pulling motion permits the belt to move and allows you some freedom of movement in the seat.**
   - **If the seat belt cannot be pulled from its fully retracted position, firmly pull the belt and release it. Then smoothly pull the belt out of the retractor.**

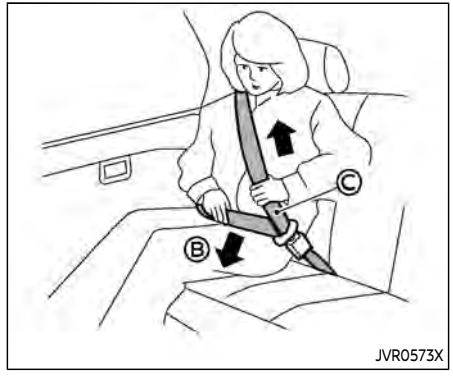

3. Position the lap belt portion **low and snug on the hips** Ⓑ as shown.
4. Pull the shoulder belt portion toward the retractor to take up extra slack Ⓒ. Be sure the shoulder belt is routed over your shoulder and across your chest.

The three-point seat belts in the front passenger seat and the rear seating positions have two modes of operation:

- Emergency Locking Retractor (ELR)
- Automatic Locking Retractor (ALR)

The Emergency Locking Retractor (ELR) mode allows the seat belt to extend and retract to allow the driver and passengers some freedom of movement in the seat.

The ELR locks the seat belt when the vehicle slows down rapidly or during certain impacts.

The Automatic Locking Retractor (ALR) mode (child restraint mode) locks the seat belt for child restraint installation.

When ALR mode is activated the seat belt cannot be extended again until the seat belt tongue is detached from the buckle and fully retracted. The seat belt returns to the ELR mode after the seat belt fully retracts. For additional information, see "Child restraints" (P.1-20).

The ALR mode should be used only for child restraint installation. During normal seat belt use by an occupant, the ALR mode should not be activated. If it is activated, it may cause uncomfortable seat belt tension.

WARNING

When fastening the seat belts, be certain that seatbacks are completely secured in the latched position. If they are not completely secured, passengers may be injured in an accident or sudden stop.

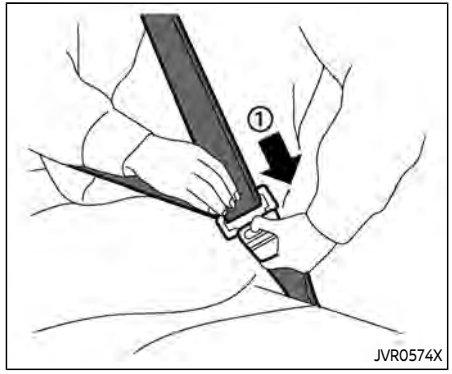

Unfastening the seat belts

To unfasten the seat belt, push the button on the buckle ①. The seat belt automatically retracts.

Checking seat belt operation

Seat belt retractors are designed to lock seat belt movement by two separate methods:

- When the belt is pulled quickly from the retractor.
- When the vehicle slows down rapidly.

To increase your confidence in the seat belts, check the operation as follows:

- Grasp the shoulder belt and pull forward quickly. The retractor should lock and restrict further belt movement.

If the retractor does not lock during this check, get the system checked. It is recommended you visit a NISSAN dealer for this service, or to learn more about seat belt operation.

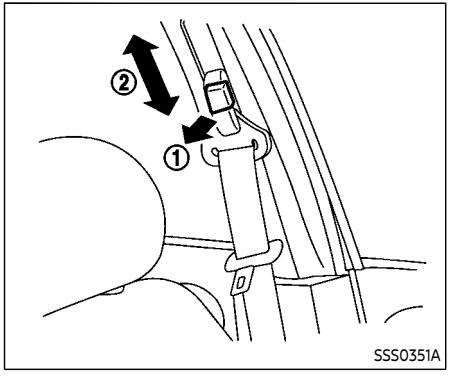

Shoulder belt height adjustment (for front seats)

The shoulder belt anchor height should be adjusted to the position best for you. (See "Precautions on seat belt usage" (P.1-10).)

To adjust, pull the adjustment button ①, and then move the shoulder belt anchor to the desired position ②, so that the belt passes over the center of the shoulder. The belt should be away from your face and neck, but not falling off of your shoulder. Release the adjustment button to lock the shoulder belt anchor into position.

The range of height adjustment of the shoulder belt may vary depending on the model.

WARNING

- **After adjustment, release the adjustment button and try to move the shoulder belt anchor up and down to make sure it is securely fixed in position.**
- **The shoulder belt anchor height should be adjusted to the position best for you. Failure to do so may reduce the effectiveness of the entire restraint system and increase the chance or severity of injury in an accident.**

SEAT BELT EXTENDERS

If, because of body size or driving position, it is not possible to properly fit the lap/shoulder belt and fasten it, an extender that is compatible with the installed seat belts is available that can be purchased. The extender adds approximately 8 in (200 mm) of length and may be used for either the driver or front passenger seating position. It is recommended you visit a NISSAN dealer for assistance with purchasing an extender if an extender is required.

WARNING

- **It is recommended that only NISSAN seat belt extenders, made by the same company which made the original equipment seat belts, be used with NISSAN seat belts.**
- **Adults and children who can use the standard seat belt should not use an extender. Such unnecessary use could result in serious personal injury in the event of an accident.**
- **Never use seat belt extenders to install child restraints. If the child restraint is not secured properly, the child could be seriously injured or killed in a collision or a sudden stop.**

SEAT BELT MAINTENANCE

- **To clean the seat belt webbing,** apply a mild soap solution or any solution recommended for cleaning upholstery or carpets. Then wipe with a cloth and allow the seat belts to dry in the shade. Do not allow the seat belts to retract until they are completely dry.

- **If dirt builds up in the shoulder belt guide** of the seat belt anchors, the seat belts may retract slowly. Wipe the shoulder belt guide with a clean, dry cloth.
- **Periodically check to see that the seat belt and the metal components**, such as buckles, tongues, retractors, flexible wires and anchors, work properly. If loose parts, deterioration, cuts or other damage on the webbing is found, the entire seat belt assembly should be replaced.

WARNING

Do not allow children to play with the seat belts. Most seating positions are equipped with Automatic Locking Retractor (ALR) mode seat belts. If the seat belt becomes wrapped around a child's neck with the ALR mode activated, the child can be seriously injured or killed if the seat belt retracts and becomes tight. This can occur even if the vehicle is parked. Unbuckle the seat belt to release the child. If the seat belt can not be unbuckled or is already unbuckled, release the child by cutting the seat belt with a suitable tool (such as a knife or scissors) to release the seat belt.

Children need adults to help protect them.

They need to be properly restrained.

In addition to the general information in this manual, child safety information is available from many other sources, including doctors, teachers, government traffic safety offices, and community organizations. Every child is different, so be sure to learn the best way to transport your child.

There are three basic types of child restraint systems:

- Rear-facing child restraint
- Forward-facing child restraint
- Booster seat

The proper restraint depends on the child's size. Generally, infants up to about 1 year and less than 20 lbs (9 kg) should be placed in rear-facing child restraints. Forward-facing child restraints are available for children who outgrow rear-facing child restraints and are at least 1 year old. Booster seats are used to help position a vehicle lap/shoulder belt on a child who can no longer use a forward-facing child restraint.

WARNING

Infants and children need special protection. The vehicle's seat belts may not fit them properly. The shoulder belt may come too close to the face or neck. The lap belt may not fit over their small hip bones. In an accident, an improperly fitting seat belt could cause serious or fatal injury. Always use appropriate child restraints.

All U.S. states and Canadian provinces or

territories require the use of approved child restraints for infants and small children. See “Child restraints” (P.1-20).

A child restraint may be secured in the vehicle by using either the LATCH (Lower Anchors and Tethers for CHildren) system or with the vehicle seat belt. See “Child restraints” (P.1-20) for more information.

NISSAN recommends that all pre-teens and children be restrained in the rear seat. Studies show that children are safer when properly restrained in the rear seat than in the front seat.

This is especially important because your vehicle has a supplemental restraint system (Air bag system) for the front passenger. See “Supplemental Restraint System (SRS)” (P.1-40).

INFANTS

Infants up to at least 1 year old should be placed in a rear-facing child restraint. NISSAN recommends that infants be placed in child restraints that comply with Federal Motor Vehicle Safety Standards or Canadian Motor Vehicle Safety Standards. You should choose a child restraint that fits your vehicle and always follow the manufacturer’s instructions for installation and use.

SMALL CHILDREN

Children that are over 1 year old and weigh at least 20 lbs (9 kg) should remain in a rear-facing child restraint as long as possible up to the height or weight limit of the child restraint. Children who outgrow the height or weight limit of the rear-facing child restraint and are at least 1 year old should be secured in a forward-facing child restraint with a harness. Refer to the manufacturer’s instructions for minimum and maximum weight and height recommendations. NISSAN recommends that small children be placed in child restraints that comply with Federal Motor Vehicle Safety Standards or Canadian Motor Vehicle Safety Standards. You should choose a child restraint that fits your vehicle and always follow the manufacturer’s instructions for installation and use.

LARGER CHILDREN

Children should remain in a forward-facing child restraint with a harness until they reach the maximum height or weight limit allowed by the child restraint manufacturer.

Once a child outgrows the height or weight limit of the harness-equipped forward-facing child restraint, NISSAN recommends that the child be placed in a commercially available booster seat to obtain proper seat belt fit. For a seat belt to fit properly, the booster seat should raise the child so that the shoulder belt is properly positioned across the chest and the top, middle portion of the shoulder. The shoulder belt should not cross the neck or face and should not fall off the shoulder. The lap belt should lie snugly across the lower hips or upper thighs, not the abdomen.

A booster seat can only be used in seating positions that have a three-point type seat belt. The booster seat should fit the vehicle seat and have a label certifying that it complies with Federal Motor Vehicle Safety Standards or Canadian Motor Vehicle Safety Standards.

A booster seat should be used until the child can pass the seat belt fit test below:

- Are the child’s back and hips against the vehicle seatback?
- Is the child able to sit without slouching?
- Do the child’s knees bend easily over the front edge of the seat with feet flat on the floor?
- Can the child safely wear the seat belt (lap belt low and snug across the hips and shoulder belt across mid-chest and shoulder)?

- Is the child able to use the properly adjusted head restraint/headrest?
- Will the child be able to stay in position for the entire ride?

If you answered no to any of these questions, the child should remain in a booster seat using a three-point type seat belt.

NOTE:

Laws in some communities may follow different guidelines. Check local and state regulations to confirm your child is using the correct restraint system before traveling.

WARNING

Never let a child stand or kneel on any seat and do not allow a child in the cargo area. The child could be seriously injured or killed in a sudden stop or collision.

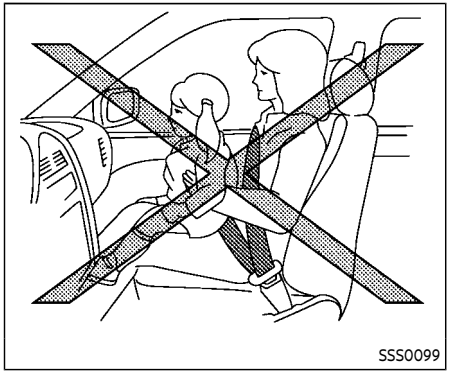
SSS0099

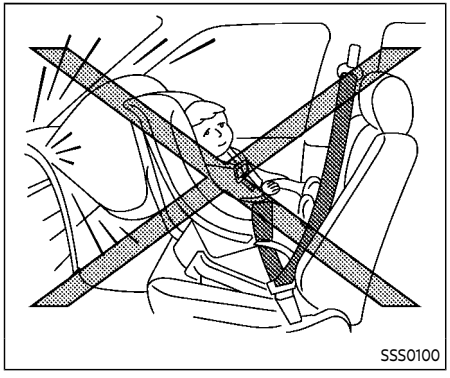
SSS0100

PRECAUTIONS ON CHILD RESTRAINTS

WARNING

- **Failure to follow the warnings and instructions for proper use and installation of child restraints could result in serious injury or death of a child or other passengers in a sudden stop or collision:**
  - **The child restraint must be used and installed properly. Always follow all of the child restraint manufacturer's instructions for installation and use.**
  - **Infants and children should never be held on anyone's lap. Even the strongest adult cannot resist the forces of a collision.**
  - **Do not put a seat belt around both a child and another passenger.**
  - **NISSAN recommends that all child restraints be installed in the rear seat. Studies show that children are safer when properly restrained in the rear seat than in the front seat. If you must install a forward-facing child restraint in the front seat, see "Forward-facing child restraint installation using the seat belts" (P.1-32).**
  - **Even with the NISSAN Advanced Air Bag System, never install a rear-facing child restraint in the front seat. An inflating air bag could seriously injure or kill a child. A rear-facing child restraint must only be used in the rear seat.**
  - **Be sure to purchase a child restraint that will fit the child and vehicle. Some child restraints may not fit properly in your vehicle.**
  - **Child restraint anchorages are designed to withstand only those loads imposed by correctly fitted child restraints. Under no circumstances are they to be used to attach adult seat belts, or other items or equipment to the vehicle. Doing so could damage the child restraint anchorages. The child restraint**

will not be properly installed using the damaged anchorage, and a child could be seriously injured or killed in a collision.

— Never use the anchor points for adult seat belts or harnesses.

— A child restraint with a top tether strap should not be used in the front passenger seat.

— Keep seatbacks as upright as possible after fitting the child restraint.

— Infants and children should always be placed in an appropriate child restraint while in the vehicle.

- **When the child restraint is not in use, keep it secured with the LATCH system or a seat belt. In a sudden stop or collision, loose objects can injure occupants or damage the vehicle.**

CAUTION

A child restraint in a closed vehicle can become very hot. Check the seating surface and buckles before placing a child in the child restraint.

This vehicle is equipped with a universal child restraint anchor system, referred to as the LATCH (Lower Anchors and Tethers for CHildren) system. Some child restraints include rigid or webbing-mounted attachments that can be connected to these anchors.

For details, see "Lower Anchors and Tethers for CHildren (LATCH) system" (P.1-22).

If you do not have a LATCH compatible child restraint, the vehicle seat belts can be used.

Several manufacturers offer child restraints for infants and small children of various sizes. When selecting any child restraint, keep the following points in mind:

- Choose only a restraint with a label certifying that it complies with Federal Motor Vehicle Safety Standard 213 or Canadian Motor Vehicle Safety Standard 213.
- Check the child restraint in your vehicle to be sure it is compatible with the vehicle's seat and seat belt system.
- If the child restraint is compatible with your vehicle, place your child in the child restraint and check the various adjustments to be sure the child restraint is compatible with your child. Choose a child restraint that is designed for your child's height and weight. Always follow all recommended procedures.
- If the combined weight of the child and child restraint is less than 65 lbs (29.5 kg), you may use either the LATCH anchors or the seat belt to install the child restraint (not both at the same time).
- If the combined weight of the child and child restraint is greater than 65 lbs (29.5 kg), use the vehicle's seat belt (not the lower anchors) to install the child restraint.
- Be sure to follow the child restraint manufacturer's instructions for installation.

All U.S. states and Canadian provinces or territories require that infants and small children be restrained in an approved child restraint at all times while the vehicle is being operated. Canadian

law requires the top tether strap on forward-facing child restraints be secured to the designated anchor point on the vehicle.

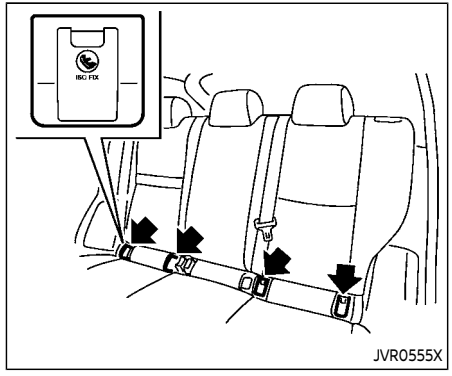

LATCH system anchor location

Lower Anchors and Tethers for CHildren (LATCH) SYSTEM

Your vehicle is equipped with special anchor points that are used with LATCH system compatible child restraints. This system may also be referred to as the ISOFIX or ISOFIX compatible system. With this system, you do not have to use a vehicle seat belt to secure the child restraint unless the combined weight of the child and child restraint exceeds 65 lbs (29.5 kg). If the combined weight of the child and child restraint is greater than 65 lbs (29.5 kg), use the vehicle's seat belt (not the lower anchors) to install the child restraint. Be sure to follow the child restraint manufacturer's instructions for installation.

CAUTION

Store the loose LATCH covers (for example, in the console box) where they will not get damaged to avoid losing them. (See "Console box" (P.2-56).)

LATCH lower anchor

WARNING

Failure to follow the warnings and instructions for proper use and installation of child restraints could result in serious injury or death of a child or other passengers in a sudden stop or collision:

- **Attach LATCH system compatible child restraints only at the locations shown in the illustration.**
- **Do not secure a child restraint in the center rear seating position using the LATCH lower anchors. The child restraint will not be secured properly.**

- **Inspect the lower anchors by inserting your fingers into the lower anchor area. Feel to make sure there are no obstructions over the anchors such as seat belt webbing or seat cushion material. The child restraint will not be secured properly if the lower anchors are obstructed.**
- **Child restraint anchorages are designed to withstand only those loads imposed by correctly fitted child restraints. Under no circumstances are they to be used to attach adult seat belts, or other items or equipment to the vehicle. Doing so could damage the child restraint anchorages. The child restraint will not be properly installed using the damaged anchorage, and a child could be seriously injured or killed in a collision.**

LATCH lower anchor location

The LATCH lower anchor points are provided to install child restraints in the rear outboard seating positions only. **Do not attempt to install a child restraint in the center seating position using the LATCH lower anchors.**

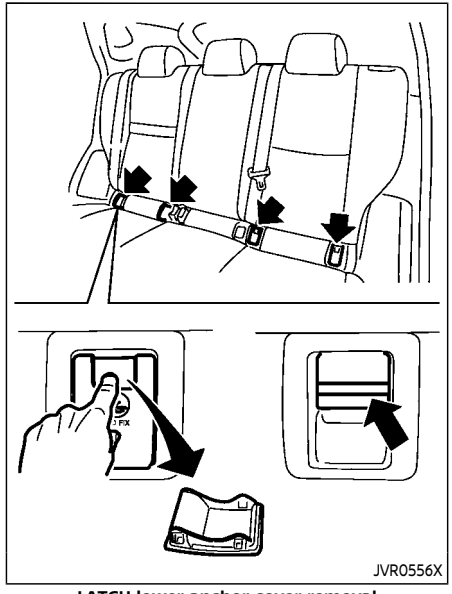

LATCH lower anchor cover removal

The LATCH lower anchor points are located under covers labelled ISOFIX at the bottom of the rear outboard seat cushions. To access a LATCH lower anchor point, insert your finger into the cover and pull the cover off.

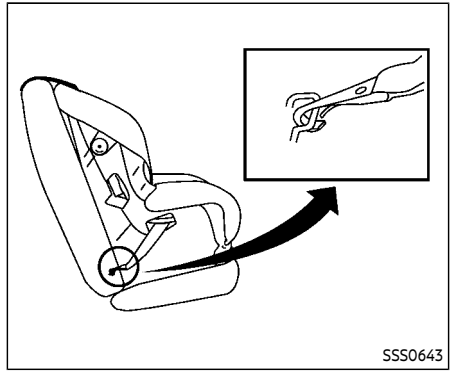

LATCH webbing-mounted attachment

Installing child restraint LATCH lower anchor attachments

LATCH compatible child restraints include two rigid or webbing-mounted attachments that can be connected to two anchors located at certain seating positions in your vehicle. With this system, you do not have to use a vehicle seat belt to secure the child restraint. Check your child restraint for a label stating that it is compatible with LATCH. This information may also be in the instructions provided by the child restraint manufacturer.

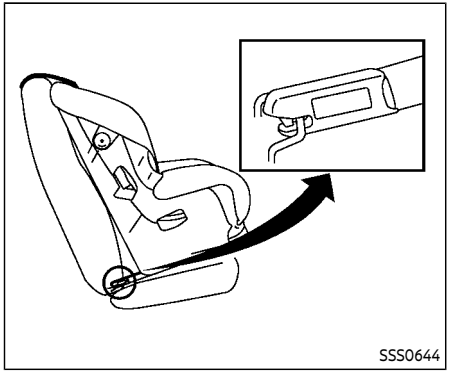

LATCH rigid attachment

When installing a child restraint, carefully read and follow the instructions in this manual and those supplied with the child restraint.

Top tether anchor

WARNING

Properly secure cargo and do not allow it to contact the top tether strap when it is attached to the top tether anchor. Cargo that is not properly secured or cargo that contacts the top tether strap may damage the top tether strap during a collision. If the parcel shelf contacts the top tether strap when it is attached to the top tether anchor, remove the parcel shelf from the vehicle or secure it on the cargo floor below its attachment location. If the parcel shelf is not removed, it may damage the top tether strap during a collision. Your child could be seriously injured or killed in a collision if the child restraint top tether strap is damaged.

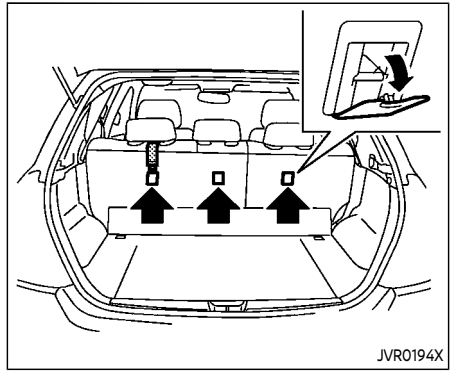

Top tether anchor point locations

WARNING

Child restraint anchorages are designed to withstand only those loads imposed by correctly fitted child restraints. Under no circumstances are they to be used to attach adult seat belts, or other items or equipment to the vehicle. Doing so could damage the child restraint anchorages. The child restraint will not be properly installed using the damaged anchorage, and a child could be seriously injured or killed in a

collision.

Anchor points are located on the back side of the seatbacks.

If a child restraint has a top tether strap, it must be used when installing with the LATCH lower anchor attachments or seat belts.

If you have any questions when installing a top tether strap child restraint on the rear seat, it is recommended you visit a NISSAN dealer for this service.

REAR-FACING CHILD RESTRAINT INSTALLATION USING LATCH

Refer to all Warnings and Cautions in the "Child safety" and "Child restraints" sections before installing a child restraint.

Do not use the lower anchors if the combined weight of the child and the child restraint exceeds 65 lbs (29.5 kg). If the combined weight of the child and the child restraint is greater than 65 lbs (29.5 kg), use the vehicle's seat belt (not the lower anchors) to install the child restraint. Be sure to follow the child restraint manufacturer's instructions for installation.

Follow these steps to install a rear-facing child restraint using the LATCH system:

1. Position the child restraint on the seat. Always follow the child restraint manufacturer's instructions.

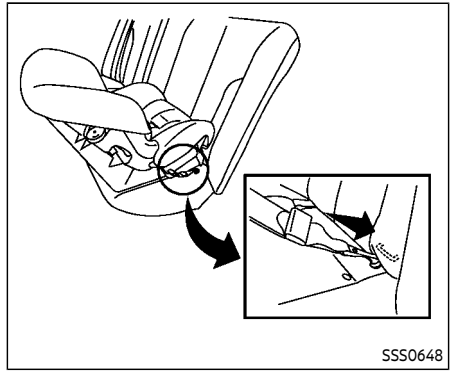

Rear-facing web-mounted — step 2

2. Secure the child restraint anchor attachments to the LATCH lower anchors. Check to make sure the LATCH attachment is properly attached to the lower anchors.

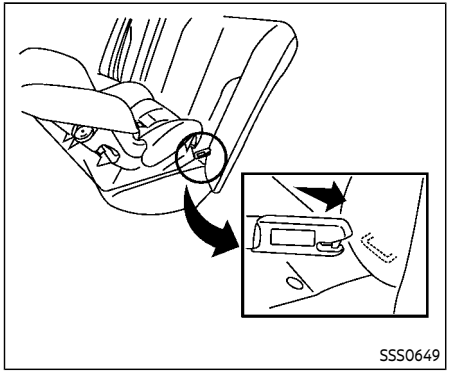

Rear-facing rigid-mounted — step 2

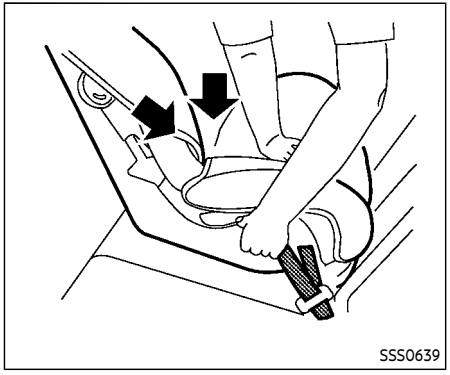

Rear-facing — step 3

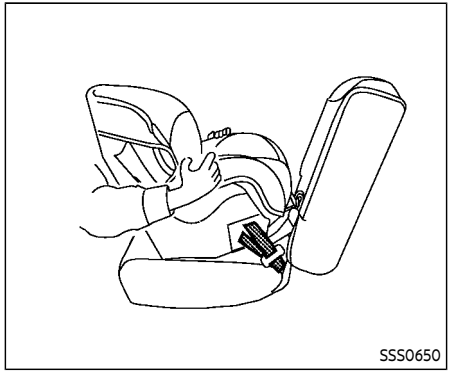

Rear-facing — step 4

3. For child restraints that are equipped with webbing-mounted attachments, remove any additional slack from the anchor attachments. Press downward and rearward firmly in the center of the child restraint with your hand to compress the vehicle seat cushion and seatback while tightening the webbing of the anchor attachments.

4. After attaching the child restraint, test it before you place the child in it. Push it from side to side while holding the child restraint near the LATCH attachment path. The child restraint should not move more than 1 inch (25 mm), from side to side. Try to tug it forward and check to see if the LATCH attachment holds the restraint in place. If the restraint is not secure, tighten the LATCH attachment as necessary, or put the restraint in another seat and test it again. You may need to try a different child restraint or try installing by using the vehicle seat belt (if applicable). Not all child restraints fit

in all types of vehicles.

5. Check to make sure the child restraint is properly secured prior to each use. If the child restraint is loose, repeat steps 1 through 4.

REAR-FACING CHILD RESTRAINT INSTALLATION USING THE SEAT BELTS

WARNING

The three-point seat belt with Automatic Locking Retractor (ALR) must be used when installing a child restraint. Failure to use the ALR mode will result in the child restraint not being properly secured. The restraint could tip over or be loose and cause injury to a child in a sudden stop or collision.

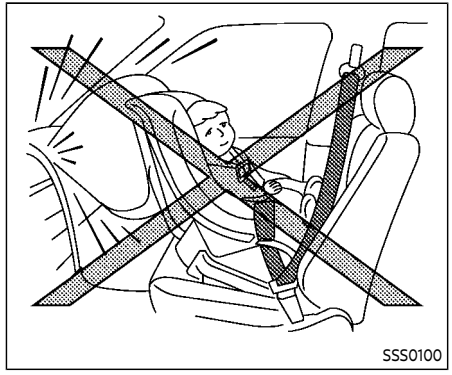

Rear-facing — step 1

Refer to all Warnings and Cautions in the "Child safety" (P.1-17) and "Child restraints" (P.1-20) before installing a child restraint.

Do not use the lower anchors if the combined weight of the child and the child restraint exceeds 65 lbs (29.5 kg). If the combined weight of the child and the child restraint is greater than 65 lbs (29.5 kg), use the vehicle's seat belt (not the lower anchors) to install the child restraint. Be sure to follow the child restraint manufacturer's instructions for installation.

Follow these steps to install a rear-facing child restraint using the vehicle seat belts in the rear seats:

1. **Child restraints for infants must be used in the rear-facing direction and therefore must not be used in the front seat.** Position the child restraint on the seat. Always follow the restraint manufacturer's instructions.

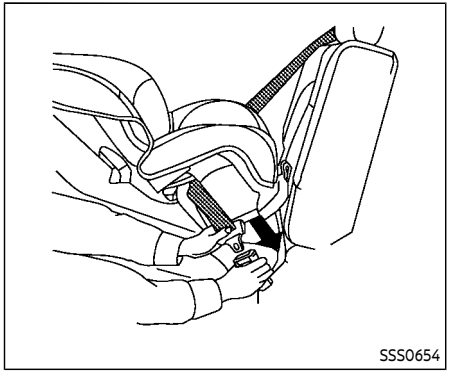

Rear-facing — step 2

2. Route the seat belt tongue through the child restraint and insert it into the buckle until you hear and feel the latch engage. Be sure to follow the child restraint manufacturer's instructions for belt routing.

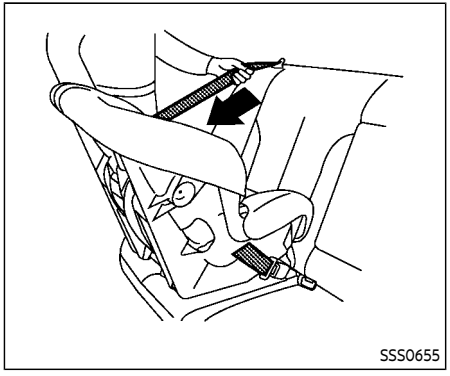

Rear-facing — step 3

3. Pull the shoulder belt until the belt is fully extended. At this time, the seat belt retractor is in the Automatic Locking Retractor (ALR) mode (child restraint mode). It reverts to the Emergency Locking Retractor (ELR) mode when the seat belt is fully retracted.

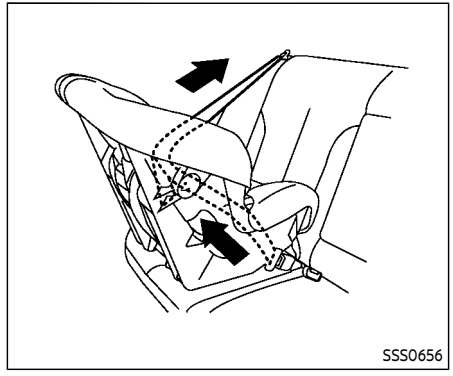

Rear-facing — step 4

4. Allow the seat belt to retract. Pull up on the shoulder belt to remove any slack in the belt.

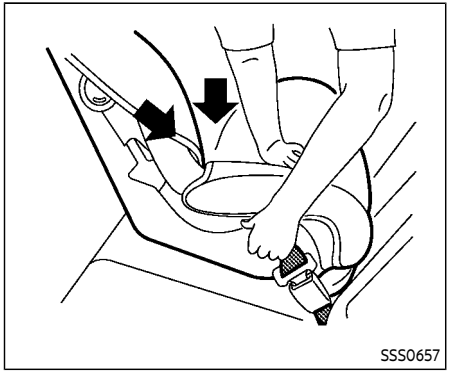

Rear-facing — step 5

5. Remove any additional slack from the seat belt; press downward and rearward firmly in the center of the child restraint to compress the vehicle seat cushion and seatback while pulling up on the seat belt.

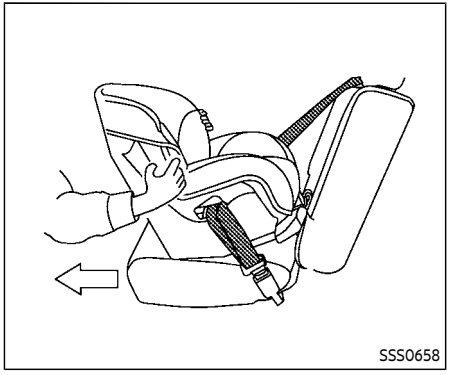

Rear-facing — step 6

6. After attaching the child restraint, test it before you place the child in it. Push it from side to side while holding the child restraint near the seat belt path. The child restraint should not move more than 1 inch (25 mm), from side to side. Try to tug it forward and check to see if the belt holds the restraint in place. If the restraint is not secure, tighten the seat belt as necessary, or put the restraint in another seat and test it again. You may need to try a different child restraint. Not all child restraints fit in all types of vehicles.
7. Check to make sure that the child restraint is properly secured prior to each use. If the seat belt is not locked, repeat steps 1 through 6.

After the child restraint is removed and the seat belt fully retracted, the ALR mode (child restraint mode) is canceled.

FORWARD-FACING CHILD RESTRAINT INSTALLATION USING LATCH

Refer to all Warnings and Cautions in the "Child safety" and "Child restraints" sections before installing a child restraint.

Do not use the lower anchors if the combined weight of the child and the child restraint exceeds 65 lbs (29.5 kg). If the combined weight of the child and the child restraint is greater than 65 lbs (29.5 kg), use the vehicle's seat belt (not the lower anchors) to install the child restraint. Be sure to follow the child restraint manufacturer's instructions for installation.

Follow these steps to install a forward-facing child restraint using the LATCH system:

1. Position the child restraint on the seat. Always follow the child restraint manufacturer's instructions.

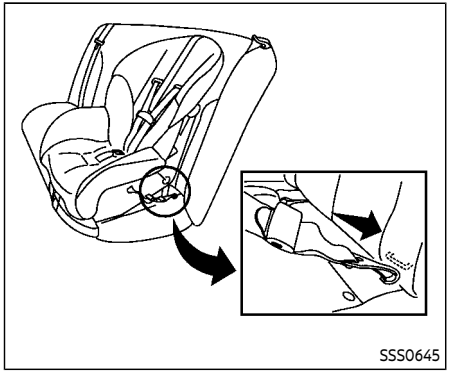

Forward-facing web-mounted — step 2

2. Secure the child restraint anchor attachments to the LATCH lower anchors. Check to make sure the LATCH attachment is properly attached to the lower anchors.

   If the child restraint is equipped with a top tether strap, route the top tether strap and secure the tether strap to the tether anchor point. See “Installing top tether strap” (P.1-32). Do not install child restraints that require the use of a top tether strap in seating positions that do not have a top tether anchor.

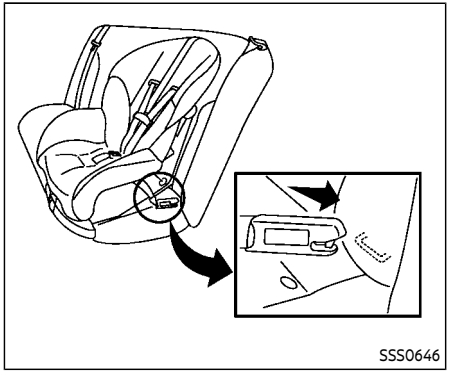

Forward-facing rigid-mounted — step 2

3. The back of the child restraint should be secured against the vehicle seatback.

   If necessary, adjust or remove the head restraint to obtain the correct child restraint fit. If the head restraint is removed, store it in a secure place. **Be sure to reinstall the head restraint when the child restraint is removed.** See “Head restraints/headrests” (P.1-6) for head restraint adjustment information.

   If the seating position does not have a head restraint and it is interfering with the proper child restraint fit, try another seating position or a different child restraint.

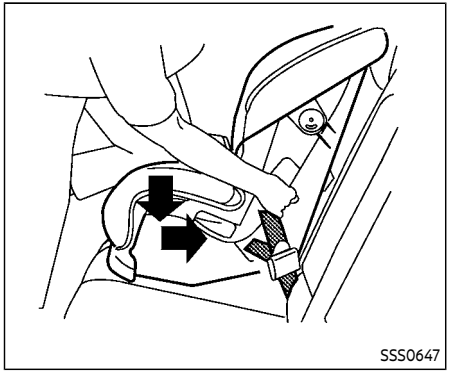

Forward-facing — step 4

4. For child restraints that are equipped with webbing-mounted attachments, remove any additional slack from the anchor attachments. Press downward and rearward firmly in the center of the child restraint with your knee to compress the vehicle seat cushion and seatback while tightening the webbing of the anchor attachments.
5. Tighten the tether strap according to the manufacturer's instructions to remove any slack.

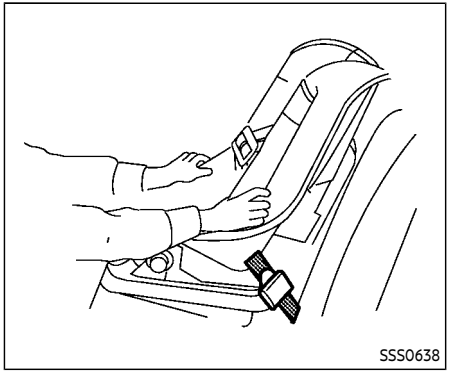

Forward-facing — step 6

6. After attaching the child restraint, test it before you place the child in it. Push it from side to side while holding the child restraint near the LATCH attachment path. The child restraint should not move more than 1 inch (25 mm), from side to side. Try to tug it forward and check to see if the LATCH attachment holds the restraint in place. If the restraint is not secure, tighten the LATCH attachment as necessary, or put the restraint in another seat and test it again. You may need to try a different child restraint. Not all child restraints fit in all types of vehicles.
7. Check to make sure the child restraint is properly secured prior to each use. If the child restraint is loose, repeat steps 1 through 6.

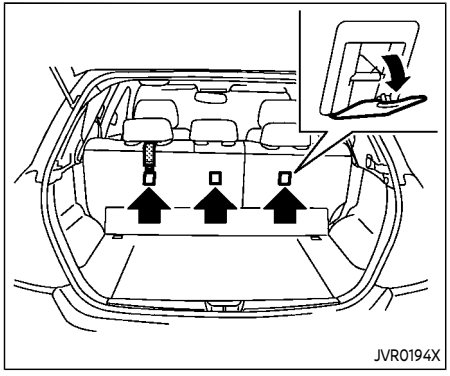

Installing top tether strap

WARNING

Child restraint anchorages are designed to withstand only those loads imposed by correctly fitted child restraints. Under no circumstances are they to be used to attach adult seat belts, or other items or equipment to the vehicle. Doing so could damage the child restraint anchorages. The child restraint will not be properly installed using the damaged anchorage, and a child could be seriously injured or killed in a collision.

The child restraint top tether strap must be used when installing the child restraint with the LATCH lower anchor attachments.

First, secure the child restraint with the LATCH lower anchors (rear outboard seating positions only).

1. Remove the head restraint and store it in a secure place. Be sure to reinstall the head restraint when the child restraint is removed.

   See "Head restraints/headrests" (P.1-6) for head restraint adjustment, removal and installation information.
2. Position the top tether strap as shown.
3. Secure the top tether strap to the tether anchor point as shown.
4. Refer to the appropriate child restraint installation procedure steps in this section before tightening the tether strap.

If you have any questions when installing a top tether strap, it is recommended that you visit a NISSAN dealer for this service.

FORWARD-FACING CHILD RESTRAINT INSTALLATION USING THE SEAT BELTS

WARNING

The three-point seat belt with Automatic Locking Retractor (ALR) must be used when installing a child restraint. Failure to use the ALR mode will result in the child restraint not being properly secured. The restraint could tip over or be loose and cause injury to a child in a sudden stop or collision. Also, it can change the operation of the front passenger air bag. See "Front passenger air bag and status light" (P.1-48).

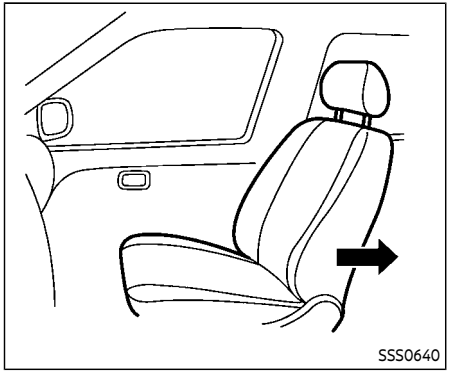

Forward-facing (front passenger seat) — step 1

Refer to all Warnings and Cautions in the "Child safety" and "Child restraints" sections before installing a child restraint.

Do not use the lower anchors if the combined weight of the child and the child restraint exceeds 65 lbs (29.5 kg). If the combined weight of the child and the child restraint is greater than 65 lbs (29.5 kg), use the vehicle's seat belt (not the lower anchors) to install the child restraint. Be sure to follow the child restraint manufacturer's instructions for installation.

Follow these steps to install a forward-facing child restraint using the vehicle seat belt in the rear seats or in the front passenger seat:

1. **If you must install a child restraint in the front seat, it should be placed in a forward-facing direction only. Move the seat to the rearmost position. Child restraints for infants must be used in the rear-facing direction and, therefore, must not be used in the front seat.**
2. Position the child restraint on the seat. Always follow the child restraint manufacturer's instructions.

   The back of the child restraint should be secured against the vehicle seatback.

   If necessary, adjust or remove the head restraint to obtain the correct child restraint fit. If the head restraint is removed, store it in a secure place. **Be sure to reinstall the head restraint when the child restraint is removed.** See "Head restraints/headrests" (P.1-6) for head restraint adjustment, removal and installation information.

   If the seating position does not have an adjustable head restraint and it is interfering with the proper child restraint fit, try another seating position or a different child restraint.

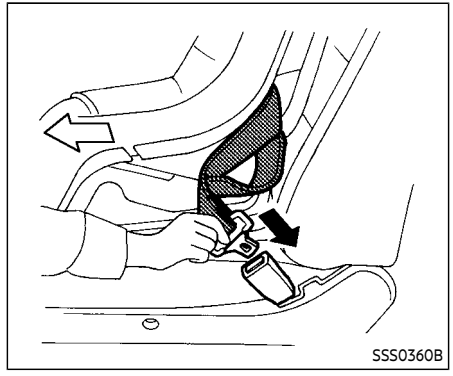

Forward-facing — step 3

3. Route the seat belt tongue through the child restraint and insert it into the buckle until you hear and feel the latch engage. Be sure to follow the child restraint manufacturer's instructions for belt routing.

   If the child restraint is equipped with a top tether strap, route the top tether strap and secure the tether strap to the tether anchor point (rear seat installation only). See "Installing top tether strap" (P.1-36). Do not install child restraints that require the use of a top tether strap in seating positions that do not have a top tether anchor.

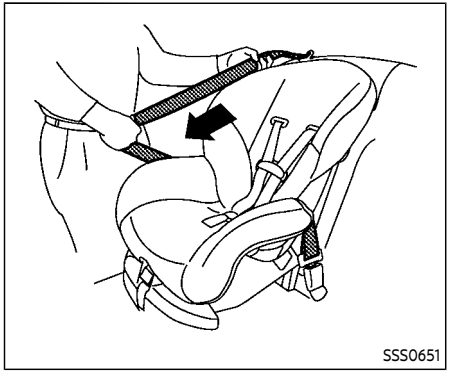

Forward-facing — step 4

4. Pull the shoulder belt until the belt is fully extended. At this time, the seat belt retractor is in the Automatic Locking Retractor (ALR) mode (child restraint mode). It reverts to Emergency Locking Retractor (ELR) mode when the seat belt is fully retracted.

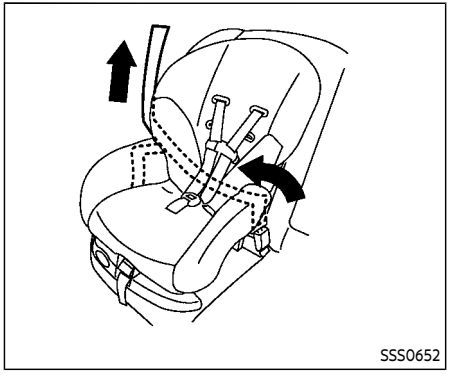

Forward-facing — step 5

5. Allow the seat belt to retract. Pull up on the shoulder belt to remove any slack in the belt.

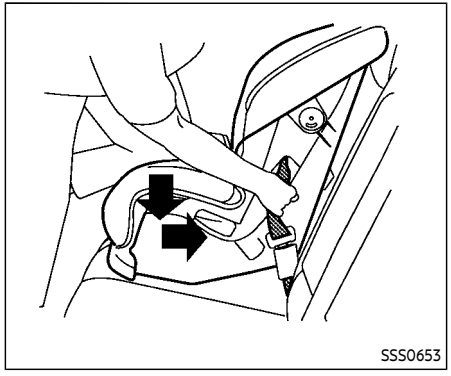

Forward-facing — step 6

6. Remove any additional slack from the seat belt; press downward and rearward firmly in the center of the child restraint with your knee to compress the vehicle seat cushion and seatback while pulling up on the seat belt.
7. Tighten the tether strap according to the manufacturer's instructions to remove any slack.

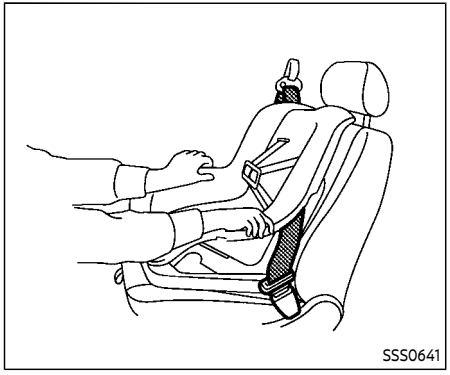

Forward-facing — step 8

8. After attaching the child restraint, test it before you place the child in it. Push it from side to side while holding the child restraint near the seat belt path. The child restraint should not move more than 1 inch (25 mm), from side to side. Try to tug it forward and check to see if the belt holds the restraint in place. If the restraint is not secure, tighten the seat belt as necessary, or put the restraint in another seat and test it again. You may need to try a different child restraint. Not all child restraints fit in all types of vehicles.
9. Check to make sure the child restraint is properly secured prior to each use. If the seat belt is not locked, repeat steps 2 through 8.

Forward-facing — step 10

10. If the child restraint is installed in the front passenger seat, place the ignition switch in the ON position. The front passenger air bag status light OFF 2 should illuminate. If this light is not illuminated, see "Front passenger air bag and status light" (P.1-48). **Move the child restraint to another seating position.** Have the system checked. It is recommended you visit a NISSAN dealer for this service.

After the child restraint is removed and the seat belt is fully retracted, the ALR mode (child restraint mode) is canceled.

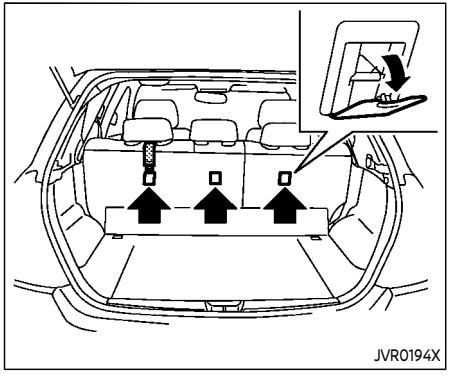

Installing top tether strap

WARNING

Child restraint anchorages are designed to withstand only those loads imposed by correctly fitted child restraints. Under no circumstances are they to be used to attach adult seat belts, or other items or equipment to the vehicle. Doing so could damage the child restraint anchorages. The child restraint will not be properly installed using the damaged anchorage, and a child could be seriously injured or killed in a collision.

The child restraint top tether strap must be used when installing the child restraint with the seat belts.

First, secure the child restraint with the seat belt.

1. Remove the head restraint and store it in a secure place. Be sure to reinstall the head restraint when the child restraint is removed.

   See "Head restraints/headrests" (P.1-6) for head restraint adjustment, removal and installation information.
2. Position the top tether strap as shown.
3. Secure the top tether strap to the tether anchor point as shown.
4. Refer to the appropriate child restraint installation procedure steps in this section before tightening the tether strap.

If you have any questions when installing a top tether strap, it is recommended you visit a NISSAN dealer for this service.

BOOSTER SEATS

Precautions on booster seats

WARNING

If a booster seat and seat belt are not used properly, the risk of a child being injured or killed in a sudden stop or collision greatly increases:

- **Make sure the shoulder portion of the belt is away from the child's face and neck and the lap portion of the belt does not cross the stomach.**
- **Make sure the shoulder belt is not behind the child or under the child's arm.**
- **A booster seat must only be installed in a seating position that has a lap/shoulder belt.**

Booster seats of various sizes are offered by several manufacturers. When selecting any booster seat, keep the following points in mind:

- Choose only a booster seat with a label certifying that it complies with Federal Motor Vehicle Safety Standard 213 or Canadian Motor Vehicle Safety Standard 213.

- Check the booster seat in your vehicle to be sure it is compatible with the vehicle's seat and seat belt system.

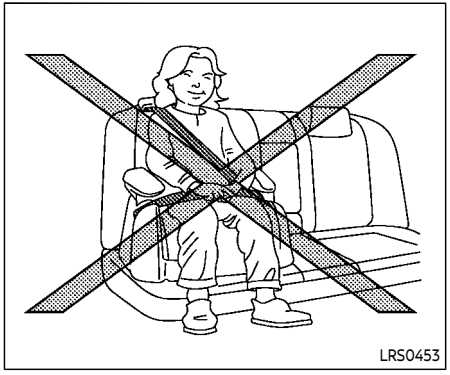

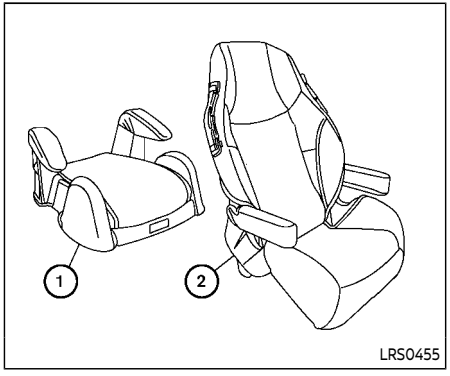

- Make sure the child's head will be properly supported by the booster seat or vehicle seat. The seatback must be at or above the center of the child's ears. For example, if a low back booster seat ① is chosen, the vehicle seatback must be at or above the center of the child's ears. If the seatback is lower than the center of the child's ears, a high back booster seat ② should be used.
- If the booster seat is compatible with your vehicle, place your child in the booster seat and check the various adjustments to be sure the booster seat is compatible with your child. Always follow all recommended procedures.

All U.S. states and Canadian provinces or territories require that infants and small children be restrained in an approved child restraint at all times while the vehicle is being operated.

The instructions in this section apply to booster seat installation in the rear seats or the front passenger seat.

Booster seat installation

WARNING

To avoid injury to child, do not use the lap/shoulder belt Automatic Locking Retractor (ALR) mode when using a booster seat with the seat belts.

Refer to all Warnings and Cautions in the "Child safety", "Child restraints" and "Booster seats" sections earlier in this section before installing a child restraint.

Follow these steps to install a booster seat in the rear seat or in the front passenger seat:

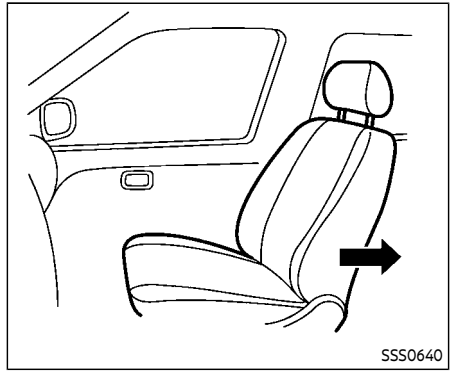

1. **If you must install a booster seat in the front seat, move the seat to the rearmost position.**
2. Position the booster seat on the seat. Only place it in a forward-facing direction. Always follow the booster seat manufacturer's instructions.

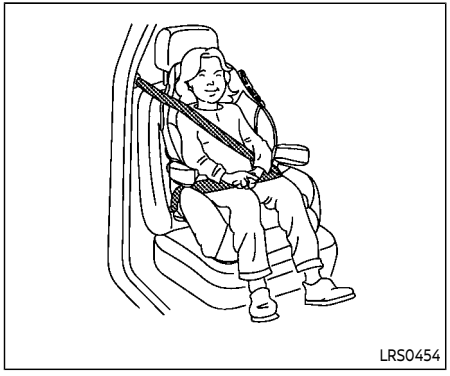

Front passenger position

3. The booster seat should be positioned on the vehicle seat so that it is stable.

   If necessary, adjust or remove the head restraint to obtain the correct booster seat fit. If the head restraint is removed, store it in a secure place. **Be sure to reinstall the head restraint when the booster seat is removed.** See "Head restraints/headrests" (P.1-6) for head restraint adjustment, removal and installation information.

   If the seating position does not have a head restraint and it is interfering with the proper booster seat fit, try another seating position or a different booster seat.

4. Position the lap portion of the seat belt low and snug on the child's hips. Be sure to follow the booster seat manufacturer's instructions for adjusting the seat belt routing.
5. Pull the shoulder belt portion of the seat belt toward the retractor to take up extra slack. Be sure the shoulder belt is positioned across the top, middle portion of the child's shoulder. Be sure to follow the booster seat manufacturer's instructions for adjusting the seat belt routing.
6. Follow the warnings, cautions and instructions for properly fastening a seat belt shown in "Seat belts" (P.1-10).

7. If the booster seat is installed in the front passenger seat, place the ignition switch in the ON position. The front passenger air bag status light OFF 2 may or may not illuminate depending on the size of the child and the type of booster seat used. See "Front passenger air bag and status light" (P.1-48).

PRECAUTIONS ON SRS

This SRS section contains important information concerning the following systems:

- Driver and front passenger supplemental front-impact air bag (NISSAN Advanced Air Bag System)
- Front seat-mounted side-impact supplemental air bag
- Roof-mounted curtain side-impact and rollover supplemental air bag
- Seat belt with pretensioner (front seats)

Supplemental front-impact air bag system: The NISSAN Advanced Air Bag System can help cushion the impact force to the head and chest of the driver and front passenger in certain frontal collisions.

Front seat-mounted side-impact supplemental air bag system: This system can help cushion the impact force to the chest and pelvic area of the driver and front passenger in certain side impact collisions. The side air bag is designed to inflate on the side where the vehicle is impacted.

Roof-mounted curtain side-impact and rollover supplemental air bag system: This system can help cushion the impact force to the heads of occupants in front and rear outboard seating positions in certain side impact or rollover collisions. In a side-impact, the curtain air bags are designed to inflate on the side where the vehicle is impacted. In a rollover, the curtain air bags on both sides are designed to inflate. Under both side-impact and rollover situations, the curtain air bags will remain inflated for a short period of time.

These supplemental restraint systems are designed to **supplement** the crash protection provided by the driver and passenger seat belts and are **not a substitute** for them. Seat belts should always be correctly worn and the occupant seated a suitable distance away from the steering wheel, instrument panel and door finishers. (See "Seat belts" (P.1-10) for instructions and precautions on seat belt usage.)

The supplemental air bags operate only when the ignition switch is in the ON or START position.

After the ignition is placed in the ON position, the supplemental air bag warning light illuminates. The supplemental air bag warning light will turn off after about 7 seconds if the systems are operational.

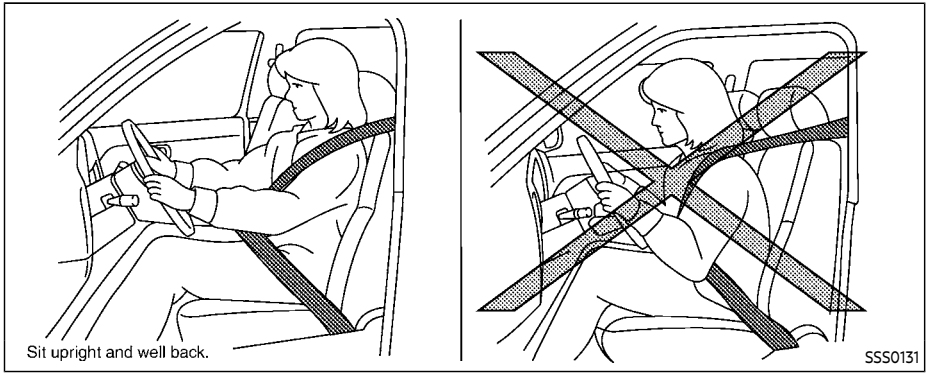

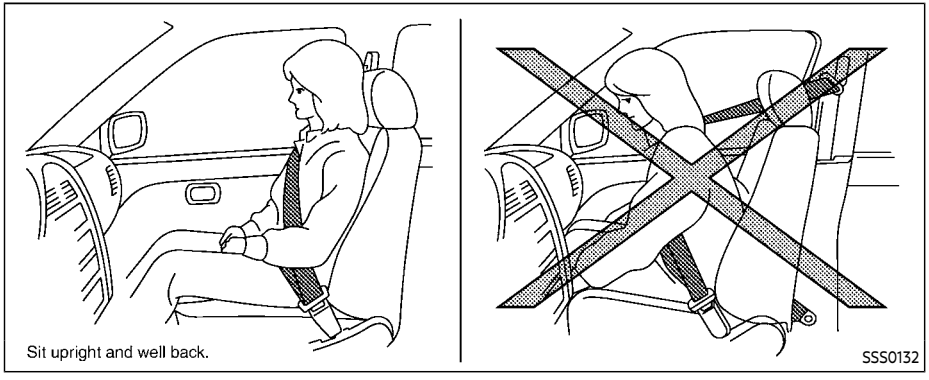

⚠ WARNING

- **The front air bags ordinarily will not inflate in the event of a side impact, rear impact, rollover, or lower severity frontal collision. Always wear your seat belts to help reduce the risk or severity of injury in various kinds of accidents.**
- **The front passenger air bag will not inflate if the front passenger air bag status light is lit. See "Front passenger air bag and status light" (P.1-48).**
- **The seat belts and the front air bags are most effective when you are sitting well back and upright in the seat with both feet on the floor. The front air bags inflate with great force. Even with the NISSAN Advanced Air Bag System, if you are unrestrained, leaning forward, sitting sideways or out of position in any way, you are at greater risk of injury or death in a crash. You may also receive serious or fatal injuries from the front air bag if you are up against it when it inflates. Always sit back against the seatback and as far-**

away as practical from the steering wheel or instrument panel. Always use the seat belts.

- **The driver and front passenger seat belt buckles are equipped with sensors that detect if the seat belts are fastened. The Advanced Air Bag System monitors the severity of a collision and seat belt usage then inflates the air bags as needed. Failure to properly wear seat belts can increase the risk or severity of injury in an accident.**
- **The front passenger seat is equipped with occupant classification sensors (weight sensors) that turn the front passenger air bag OFF under some conditions. These sensors are only used in this seat. Failure to be properly seated and wearing the seat belt can increase the risk or severity of injury in an accident. See "Front passenger air bag and status light" (P.1-48).**
- **Keep hands on the outside of the steering wheel. Placing them inside the steering wheel rim could increase the risk that they are injured if the front air bag inflates.**

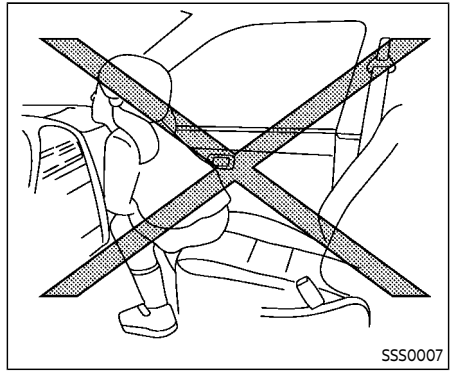
SSS0007

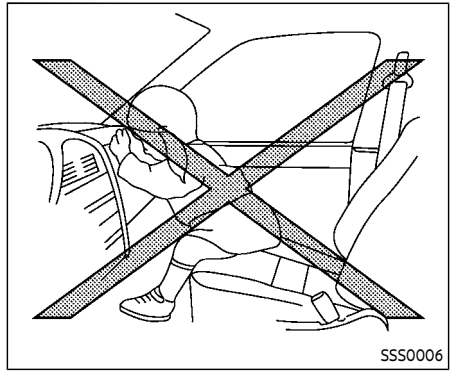
SSS0006

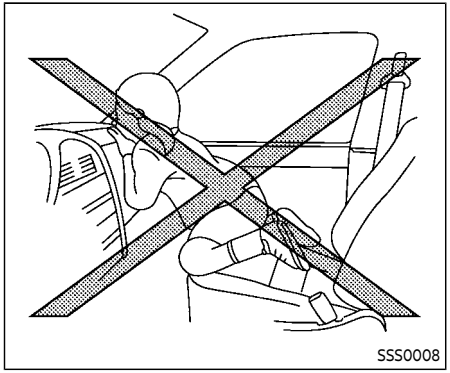
SSS0008

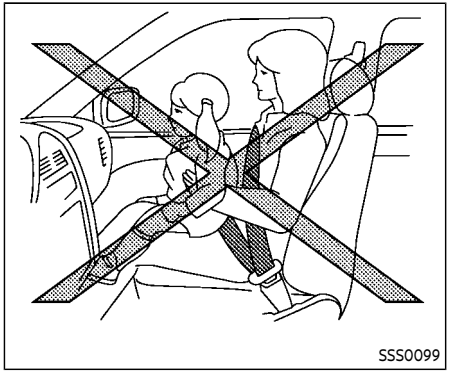
SSS0099

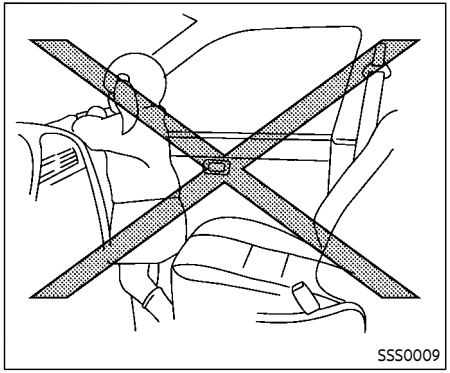
SSS0009

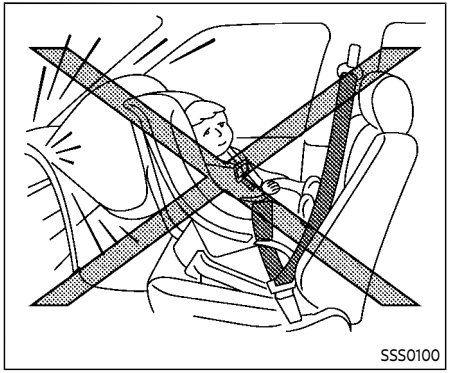
SSS0100

WARNING

- **Never let children ride unrestrained or extend their hands or face out of the window. Do not attempt to hold them in your lap or arms. Some examples of dangerous riding positions are shown in the illustrations.**
- **Children may be severely injured or killed when the front air bags, side air bags or curtain air bags inflate if they are not properly restrained. Pre-teens and children should be properly restrained in the rear seat, if possible.**
- **Even with the NISSAN Advanced Air Bag System, never install a rear-facing child restraint in the front seat. An inflating front air bag could seriously injure or kill your child. See "Child restraints" (P.1-20) for details.**

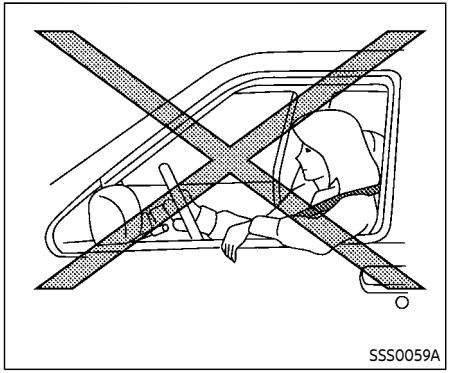

Do not lean against doors or windows.

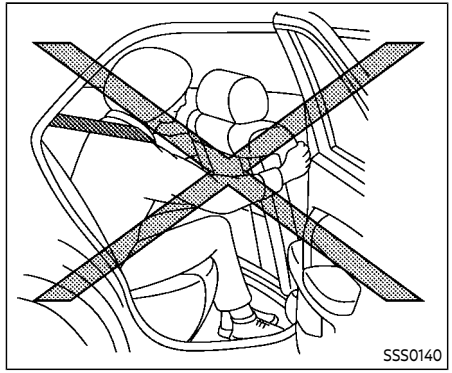

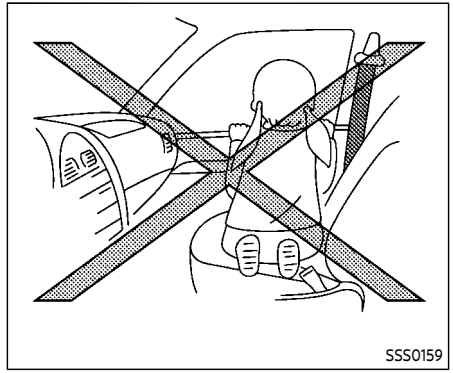

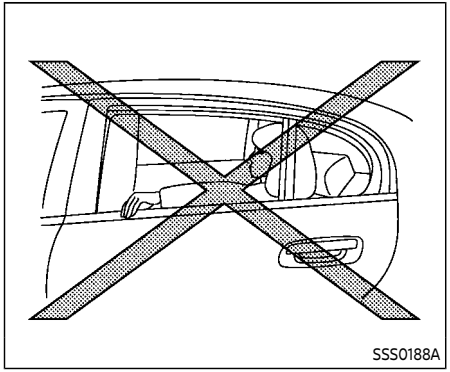

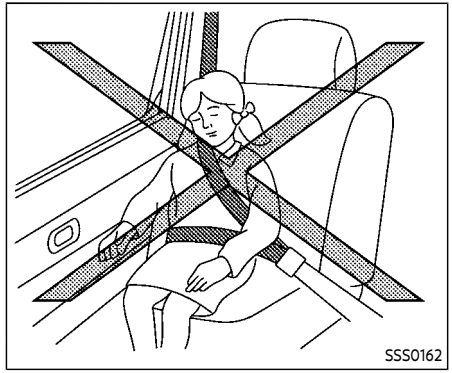

WARNING

Front seat-mounted side-impact supplemental air bags and roof-mounted curtain side-impact and rollover supplemental air bags:

- **The side air bags ordinarily will not inflate in the event of a frontal impact, rear impact, rollover or lower severity side collision. Always wear your seat belts to help reduce the risk or severity of injury in various kinds of accidents.**

- **The curtain air bags ordinarily will not inflate in the event of a front impact, rear impact, or lower severity side collision. Always wear your seat belts to help reduce the risk or severity of injury in various kinds of accidents.**
- **The seat belts, the side air bags and curtain air bags are most effective when you are sitting well back and upright in the seat. The side air bags and curtain air bags inflate with great force. Do not allow anyone to place their hand, leg or face near the side air bags on the side of the seatback of the front seat or near the side roof rails. Do not allow anyone sitting in the front seats or rear outboard seats to extend their hand out of the window or lean against the door. Some examples of dangerous riding positions are shown in the previous illustrations.**
- **When sitting in the rear seat, do not hold onto the seatback of the front seat. If the side air bag inflates, you may be seriously injured. Be especially careful with children, who should always be properly restrained. Some examples of dangerous riding positions are shown in the illustrations.**
- **Do not use seat covers on the front seatbacks. They may interfere with side air bag inflation.**

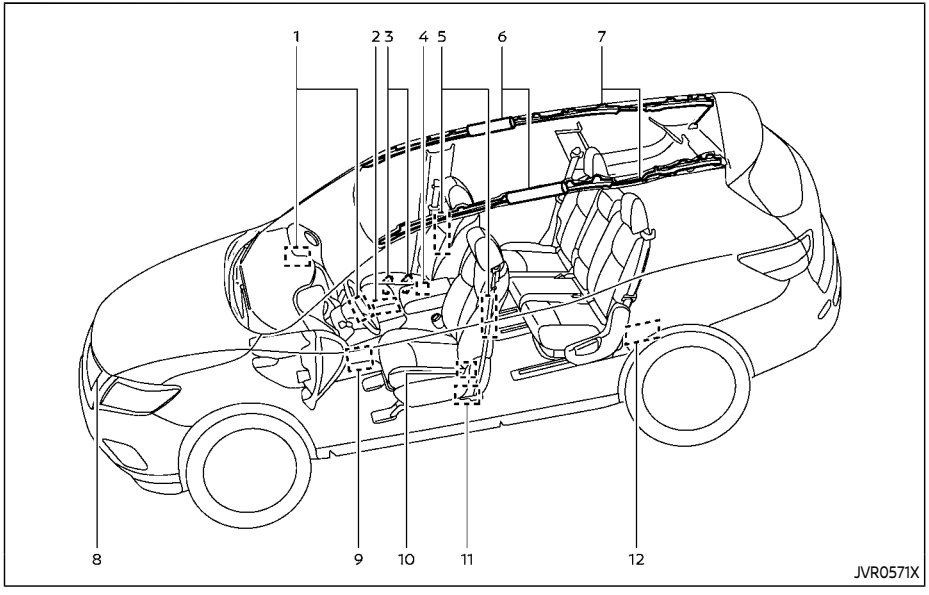

1. Supplemental front-impact air bag modules (NISSAN Advanced Air Bags)
2. Air bag Control Unit (ACU)
3. Occupant classification sensors (weight sensors)
4. Occupant classification system control unit
5. Front seat-mounted side-impact supplemental air bag modules
6. Roof-mounted curtain side-impact and rollover supplemental air bag inflators
7. Roof-mounted curtain side-impact and rollover supplemental air bag modules
8. Crash zone sensor
9. Front door pressure sensors (driver's side shown; front passenger side similar)
10. Lap outer pretensioners
11. Seat belt with pretensioners
12. Satellite sensors

NISSAN ADVANCED AIR BAG SYSTEM (front seats)

WARNING

To ensure proper operation of the passenger's Advanced Air Bag system, please observe the following items.

- **Do not allow a passenger in the rear seat to push or pull on the seatback pocket.**
- **Do not place heavy loads heavier than 9.1 lbs (4 kg) on the seatback, head restraint or in the seatback pocket.**
- **Make sure nothing is pressing against the rear of the seatback, such as a child restraint installed in the rear seat or an object stored on the floor.**
- **Make sure that there is no object placed under the front passenger seat.**
- **Make sure that there is no object placed between the seat cushion and center console or between**

the seat cushion and the door.

- **Be sure that the front passenger seat does not contact the rear seat, instrument panel, etc., or the head restraint does not contact the roof.**
- **Do not position the front passenger seat so it contacts the rear seat. If the front seat does contact the rear seat, the air bag system may determine a sensor malfunction has occurred and the front passenger air bag status light may illuminate and the supplemental air bag warning light may flash.**
- **If a forward facing child restraint is installed in the front passenger seat, do not position the front passenger seat so the child restraint contacts the instrument panel. If the child restraint does contact the instrument panel, the system may determine the seat is occupied and the passenger air bag may deploy in a collision. Also the front passenger air bag status light may not illuminate. See "Child restraints" (P.1-20) for information about installing and using child restraints.**
- **Confirm the operating condition with the front passenger air bag status light.**
- **If you notice that the front passenger air bag status light is not operating as described in this section, it is recommended you visit a NISSAN dealer to check the passenger seat Advanced Air Bag System.**
- **Until you have confirmed with your dealer that your passenger seat Advanced Air Bag is working properly, position the occupants in the rear seating positions.**

This vehicle is equipped with the NISSAN Advanced Air Bag System for the driver and front passenger seats. This system is designed to meet certification requirements under U.S. regulations. It is also permitted in Canada. **All of the information, cautions and warnings in this manual apply and must be followed.**

The driver supplemental front-impact air bag is located in the center of the steering wheel. The passenger supplemental front-impact air bag is mounted in the instrument panel above the glove box. The front air bags are designed to inflate in higher severity frontal collisions, although they may inflate if the forces in another type of collision are similar to those of a higher severity frontal impact. They may not inflate in certain frontal collisions. Vehicle damage (or lack of it) is not always an indication of proper front air bag operation.

The NISSAN Advanced Air Bag System has dual stage air bag inflators. The system monitors information from the Air bag Control Unit (ACU), seat belt buckle sensors and the occupant classification sensors (weight sensors). Inflator operation is based on the severity of a collision and seat belt usage for the driver. For the front passenger, the occupant classification sensors are also monitored. Based on information from the sensors, only one front air bag may inflate in a crash, depending on the crash severity and whether the front occupants are belted or unbelted. Additionally, the front passenger air bag may be automatically turned OFF under some conditions, depending on the information provided by the occupant classification sensors. If the front passenger air bag is OFF, the front passenger air bag status light will be illuminated. (See "Front passenger air bag and status light" (P.1-48) for further details.) One front air bag inflating does not indicate improper performance of the system.

If you have any questions about your air bag system, it is recommended you visit a NISSAN dealer to obtain information about the system. If you are considering modification of your vehicle due to a disability, you may also contact NISSAN. Contact information is contained in the front of this Owner's Manual.

When a front air bag inflates, a fairly loud noise may be heard, followed by release of smoke. This smoke is not harmful and does not indicate a fire. Care should be taken not to inhale it, as it may cause irritation and choking. Those with a history of a breathing condition should get fresh air promptly.

Front air bags, along with the use of seat belts, help to cushion the impact force on the head and chest of the front occupants. They can help save lives and reduce serious injuries. However, an inflating front air bag may cause facial abrasions or other injuries. Front air bags do not provide restraint to the lower body.

Even with NISSAN Advanced Air Bags, seat belts should be correctly worn and the driver and passenger seated upright as far as practical away from the steering wheel or instrument panel. The front air bags inflate quickly in order to help protect the front occupants. Because of this, the force of the front air bag inflating can increase the risk of injury if the occupant is too close to, or is against, the air bag module during inflation.

The front air bags deflate quickly after a collision.

The front air bags operate only when the ignition switch is in the ON position.

After the ignition is placed in the ON position, the supplemental air bag warning light illuminates. The supplemental air bag warning light will turn off after about 7 seconds if the system is operational.

Front passenger air bag status light

Front passenger air bag and status light

WARNING

The front passenger air bag is designed to automatically turn OFF under some conditions. Read this section carefully to learn how it operates. Proper use of the seat, seat belt and child restraints is necessary for most effective protection. Failure to follow all instructions in this manual concerning the use of seats, seat belts and

child restraints can increase the risk or severity of injury in an accident.

Status light:

The front passenger seat is equipped with occupant classification sensors (weight sensors) that turn the front passenger air bag on or off depending on the weight applied to the front passenger seat. The status of the front passenger air bag (ON or OFF) is indicated by the front passenger air bag status light which is located on the instrument panel. After the ignition switch is placed in the ON position, the front passenger air bag status light illuminates for about 7 seconds and then turns off or remains illuminate depending on the front passenger seat occupied status. The light operates as follows:

CONDITION	DESCRIPTION	PASSENGER AIR BAG INDICATOR LIGHT ( )	FRONT PASSENGER AIR BAG STATUS
Empty	Empty front passenger seat	ON (illuminated)	INHIBITED
Nobody/Somebody	Bag or Child or Child Restraint or Small Adult in front passenger seat	ON (illuminated)	INHIBITED
Adult	Adult in the front passenger seat	OFF (dark)	ACTIVATED

In addition to the above, certain objects placed on the front passenger seat may also cause the light to operate as described above depending on their weight.

For additional information related to the normal operation and troubleshooting of this occupant classification sensor system, please refer to “Normal operation” (P.1-51) and “Troubleshooting” (P.1-51) in this section.

Front passenger air bag:

The front passenger air bag is designed to automatically turn OFF when the vehicle is operated under some conditions as described below as permitted by U.S. regulations. If the front passenger air bag is OFF, it will not inflate in a crash. The driver air bag and other air bags in your vehicle are not part of this system.

The purpose of the regulation is to help reduce the risk of injury or death from an inflating air bag to certain front passenger seat occupants, such as children, by requiring the air bag to be automatically turned OFF.

The occupant classification sensors (weight sensors) are on the seat cushion frame under the front passenger seat and are designed to detect an occupant and objects on the seat. For example, if a child is in the front passenger seat, the Advanced Air Bag System is designed to turn the passenger air bag OFF in accordance with the regulations. Also, if a child restraint of the type specified in the regulations is on the seat, the occupant classification sensors can detect it and cause the air bag to turn OFF.

Front passenger seat adult occupants who are properly seated and using the seat belt as outlined in this manual should not cause the passenger air bag

to be automatically turned OFF. For small adults it may be turned OFF, however, if the occupant does not sit in the seat properly (for example, by not sitting upright, by sitting on an edge of the seat, or by otherwise being out of position), this could cause the sensors to turn the air bag OFF. Always be sure to be seated and wearing the seat belt properly for the most effective protection by the seat belt and supplemental air bag.

NISSAN recommends that pre-teens and children be properly restrained in a rear seat. NISSAN also recommends that appropriate child restraints and booster seats be properly installed in a rear seat. If this is not possible, the occupant classification sensors are designed to operate as described above to turn the front passenger air bag OFF for specified child restraints. Failing to properly secure child restraints and to use the Automatic Locking Retractor (ALR) mode (child restraint mode) may allow the restraint to tip or move in an accident or sudden stop. This can also result in the passenger air bag inflating in a crash instead of being OFF. (See "Child restraints" (P.1-20) for proper use and installation.)

If the front passenger seat is not occupied, the passenger air bag is designed not to inflate in a crash. However, heavy objects placed on the seat could result in air bag inflation, because of the object being detected by the occupant classification sensors. Other conditions could also result in air bag inflation, such as if a child is standing on the seat, or if two children are on the seat, contrary to the instructions in this manual. Always be sure that you and all vehicle occupants are seated and restrained properly.

Using the front passenger air bag status light, you can monitor when the front passenger air bag is automatically turned OFF.

If an adult occupant is in the seat but the front passenger air bag status light is illuminated (indicating that the air bag is OFF), it could be that the person is a small adult, or is not sitting on the seat properly.

If a child restraint must be used in the front seat, the front passenger air bag status light may or may not be illuminated, depending on the size of the child and the type of child restraint being used. If the front passenger air bag status light is not illuminated (indicating that the air bag might inflate in a crash), it could be that the child restraint or seat belt is not being used properly. Make sure that the child restraint is installed properly, the seat belt is used properly and the occupant is positioned properly. If the front passenger air bag status light is not illuminated, reposition the occupant or child restraint in a rear seat.

If the front passenger air bag status light will not illuminate even though you believe that the child restraint, the seat belts and the occupant are properly positioned, it is recommended that you take your vehicle to a NISSAN dealer. A NISSAN dealer can check the system status by using a special tool. However, until you have confirmed with your dealer that your air bag is working properly, reposition the occupant or child restraint in a rear seat.

The NISSAN Advanced Air Bag System and front passenger air bag status light will take a few seconds to register a change in the passenger seat status. This is normal system operation and does not indicate a malfunction.

If a malfunction occurs in the front passenger air bag system, the supplemental air bag warning light , located in the meters and gauges area, will illuminate. Have the system checked. It is recommended you visit a NISSAN dealer for this service.

Normal operation:

In order for the occupant classification sensor system to classify the front passenger based on weight, please follow the precautions and steps outlined below:

Precautions:

- Make sure that there are no objects weighing over 9.1 lbs (4 kg) hanging on the seat or placed in the seatback pocket.
- Make sure that a child restraint or other object is not pressing against the rear of the seatback.
- Make sure that a rear passenger is not pushing or pulling on the back of the front passenger seat.
- Make sure that the front passenger seat or seatback is not forced back against an object on the seat or floor behind it.
- Make sure that there is no object placed under the front passenger seat.
- Make sure that the front passenger seat head restraint does not contact the roof when adjusting the front passenger seat.

Steps:

1. Adjust the seat as outlined. (See "Seats" (P.1-2).) Sit upright, leaning against the seatback, and centered on the seat cushion with your feet comfortably extended to the floor.
2. Make sure there are no objects on your lap.
3. Fasten the seat belt as outlined. (See "Seat belts" (P.1-10).) Front passenger seat belt buckle status is monitored by the occupant classification system, and is used as an input to determine occupancy status. So, it is highly recommended that the front passenger fasten their seat belt.
4. Remain in this position for 30 seconds allowing the system to classify the front passenger before the vehicle is put into motion.
5. Ensure proper classification by checking the front passenger air bag status light.

NOTE:

This vehicle's occupant classification sensor system locks the classification during driving so it is important that you confirm that the front passenger is properly classified prior to driving. Also, the occupant classification sensor system may recalculate the weight of the occupant under some conditions (both while driving and when stopped), so the front passenger seat occupant should continue to remain seated as outlined above.

Troubleshooting:

If you think the front passenger air bag status light is incorrect:

1. If the light is ON with an adult occupying the front passenger seat:

- Occupant is a small adult — the front passenger air bag status light is functioning as intended. The front passenger air bag is suppressed.

However, if the occupant is not a small adult, then this may be due to the following conditions that may be interfering with the weight sensors:

- Occupant is not sitting upright, leaning against the seatback, and centered on the seat cushion with his/her feet comfortably extended to the floor.
- A child restraint or other object pressing against the rear of the seatback.
- A rear passenger pushing or pulling on the back of the front passenger seat.
- Forcing the front seat or seatback against an object on the seat or floor behind it.

- An object placed under the front passenger seat.
- An object placed between the seat cushion and center console or between the seat cushion and the door.

If the vehicle is moving, please come to a stop when it is safe to do so. Check and correct any of the above conditions. Restart the vehicle and wait 1 minute.

NOTE:

A system check will be performed during which the front passenger air bag status light will remain lit for about 7 seconds initially.

If the light is still ON after this, the person should be advised not to ride in the front passenger seat and it is recommended that the vehicle should be checked by a NISSAN dealer as soon as possible.

2. If the light is OFF with a small adult, child or child restraint occupying the front passenger seat.

   This may be due to the following conditions that may be interfering with the weight sensors:

- Small adult or child is not sitting upright, leaning against the seatback, and centered on the seat cushion with his/her feet comfortably extended to the floor.
- The child restraint is not properly installed, as outlined. (See "Child restraints" (P.1-20).)
- An object weighing over 9.1 lbs (4 kg) hanging on the seat or placed in the seatback pocket.
- A child restraint or other object pressing against the rear of the seatback.
- A rear passenger pushing or pulling on the back of the front passenger seat.
- Forcing the front seat or seatback against an object on the seat or floor behind it.
- An object placed under the front passenger seat.
- An object placed between the seat cushion and center console.
- The front passenger seat head restraint contacting the roof.

If the vehicle is moving, please come to a stop when it is safe to do so. Check and correct any of the above conditions. Restart the vehicle and wait 1 minute.

NOTE:

A system check will be performed during which the front passenger air bag status light will remain lit for about 7 seconds initially.

If the light is still OFF after this, the small adult, child or child restraint should be repositioned in the rear seat and it is recommended that the vehicle should be checked by a NISSAN dealer as soon as possible.

3. If the light is OFF with no front passenger and no objects on the front passenger seat, the vehicle should be checked as soon as possible. It is recommended you visit a NISSAN dealer for this service.

Other supplemental front-impact air bag precautions

WARNING

- **Do not place any objects on the steering wheel pad or on the instrument panel. Also, do not place any objects between any occupant and the steering wheel or instrument panel. Such objects may become dangerous projectiles and cause injury if the front air bags inflate.**
- **Do not place objects with sharp edges on the seat. Also, do not place heavy objects on the seat that will leave permanent impressions in the seat. Such objects can damage the seat or occupant classification sensors (weight sensors). This can affect the op-**

eration of the air bag system and result in serious personal injury.

- **Do not use water or acidic cleaners (hot steam cleaners) on the seat. This can damage the seat or occupant classification sensors. This can also affect the operation of the air bag system and result in serious personal injury.**
- **Immediately after inflation, several front air bag system components will be hot. Do not touch them; you may severely burn yourself.**
- **No unauthorized changes should be made to any components or wiring of the supplemental air bag system. This is to prevent accidental inflation of the supplemental air bag or damage to the supplemental air bag system.**
- **Do not make unauthorized changes to your vehicle's electrical system, suspension system or front end structure. This could affect proper operation of the front air bag system.**
- **Tampering with the front air bag system may result in serious personal injury. Tampering includes changes to the steering wheel and the instrument panel assembly by placing material over the steering wheel pad and above the instrument panel or by installing additional trim material around the air bag system.**
- **Removing or modifying the front passenger seat may affect the function of the air bag system and result in serious personal injury.**
- **Modifying or tampering with the front passenger seat may result in serious personal injury. For example, do not change the front seats by placing material on the seat cushion or by installing additional trim material, such as seat covers, on the seat that is not specifically designed to assure proper air bag operation. Additionally, do not stow any objects under the front passenger seat or the seat cushion and seatback. Such objects may interfere with the proper operation of the occupant classification sensors.**
- **No unauthorized changes should be made to any components or wiring of the seat belt system. This may affect the front air bag system. Tampering with the seat belt system may result in serious personal injury.**
- **It is recommended you visit a NISSAN dealer for work on and around the front air bag. It is also recommended you visit a NISSAN dealer for installation of electrical equipment. The Supplemental Restraint System (SRS) wiring harnesses* should not be modified or disconnected. Unauthorized electrical test equipment and probing devices should not be used on the air bag system.**
- **A cracked windshield should be replaced immediately by a qualified repair facility. A cracked windshield could affect the function of the supplemental air bag system.**

***The SRS wiring harness connectors are yellow and orange for easy identification.**

When selling your vehicle, we request that you inform the buyer about the front air bag system and guide the buyer to the appropriate sections in this Owner's Manual.

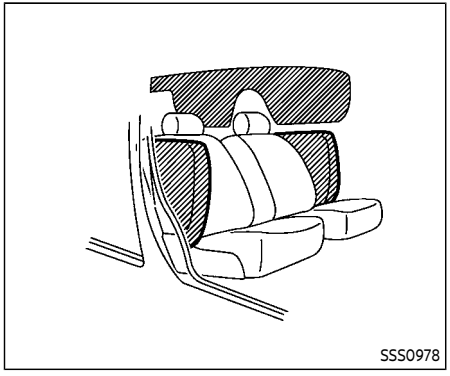

FRONT SEAT-MOUNTED SIDE-IMPACT SUPPLEMENTAL AIR BAG AND ROOF-MOUNTED CURTAIN SIDE-IMPACT AND ROLLOVER SUPPLEMENTAL AIR BAG SYSTEMS

The side air bags are located in the outside of the seatback of the front seats. The curtain air bags are located in the side roof rails. **All of the information, cautions and warnings in this manual apply and must be followed.** The side air bags and curtain air bags are designed to inflate in higher severity side collisions, although they may inflate if the forces in another type of collision are similar to those of a higher severity side impact. They are designed to inflate on the side where the vehicle is impacted. They may not inflate in certain side collisions.

Curtain air bags are also designed to inflate in certain types of rollover collisions or near rollovers. As a result, certain vehicle movements (for example, during severe off-roading) may cause the curtain air bags to inflate.

Vehicle damage (or lack of it) is not always an indication of proper side air bag and curtain air bag operation.

When the side air bags and curtain air bags inflate, a fairly loud noise may be heard, followed by release of smoke. This smoke is not harmful and does not indicate a fire. Care should be taken not to inhale it, as it may cause irritation and choking. Those with a history of a breathing condition should get fresh air promptly.

Side air bags, along with the use of seat belts, help to cushion the impact force on the chest and pelvic area of the front occupants. Curtain air bags help to cushion the impact force to the head of occupants in the front and rear outboard seating positions. They can help save lives and reduce serious injuries. However, an inflating side air bag or curtain air bag may cause abrasions or other injuries. Side air bags and curtain air bags do not provide restraint to the lower body.

The seat belts should be correctly worn and the driver and passenger seated upright as far as practical away from the side air bags. Rear seat passengers should be seated as far away as practical from the door finishers and side roof rails. The side air bags and curtain air bags inflate quickly in order to help protect the occupants. Because of this, the force of the side air bags and curtain air bags inflating can increase the risk of injury if the occupant is too close to, or is against, these air bag modules during inflation. The side air bag will deflate quickly after the collision is over. The curtain air bag will remain inflated for a short time.

The side air bags and curtain air bags operate only when the ignition switch is in the ON position.

After placing the ignition switch in the ON position, the supplemental air bag warning light illuminates. The supplemental air bag warning light will turn off after about 7 seconds if the systems are operational.

WARNING

- **Do not place any objects near the seatback of the front seats. Also, do not place any objects (an umbrella, bag, etc.) between the front door finisher and the front seat. Such objects may become dangerous projectiles and cause injury if a side air bag inflates.**
- **Right after inflation, several side air bag and curtain air bag system components will be hot. Do not touch them; you may severely burn yourself.**
- **No unauthorized changes should be made to any components or wiring of the side air bag and curtain air bag systems. This is to prevent damage to or accidental inflation of the side air bag and curtain air bag systems.**
- **Do not make unauthorized changes to your vehicle's electrical system, suspension system or side panel. This could affect proper operation of the side air bag and curtain air bag systems.**
- **Tampering with the side air bag system may result in serious personal injury. For example, do not change the front seats by placing material near the seatbacks or by installing additional trim material, such as seat covers, around the side air bag.**
- **Removing or modifying the front passenger seat may affect the function of the air bag system and result in serious personal injury.**
- **It is recommended you visit a NISSAN dealer for work on and around the side air bag and curtain air bag. It is also recommended you visit a NISSAN dealer for installation of electrical equipment. The Supplemental Restraint System (SRS) wiring harnesses* should not be modified or disconnected. Unauthorized electrical test equipment and probing devices should not be used on the side air bag or curtain air bag systems.**

***The SRS wiring harness connectors are yellow and orange for easy identification.**

When selling your vehicle, we request that you inform the buyer about the side air bag and curtain air bag systems and guide the buyer to the appropriate sections in this Owner's Manual.

SEAT BELTS WITH PRETENSIONERS (front seats)

WARNING

- **The pretensioners cannot be reused after activation. They must be replaced together with the retractor and buckle as a unit.**
- **If the vehicle becomes involved in a collision but a pretensioner is not activated, be sure to have the pretensioner system checked and, if necessary, repaired. It is recommended you visit a NISSAN dealer for this service.**
- **No unauthorized changes should be made to any components or wiring of the pretensioner system. This is to prevent damage to or accidental activation of the pretensioners. Tampering with the pretensioner system may result in serious personal injury.**
- **It is recommended you visit a NISSAN dealer for work on and around the pretensioner system. It is also recommended you visit a NISSAN dealer for installation of**

electrical equipment. Unauthorized electrical test equipment and probing devices should not be used on the pretensioner system.

- **If you need to dispose of a pretensioner or scrap the vehicle, it is recommended you visit a NISSAN dealer for this service. Correct pretensioner disposal procedures are set forth in the appropriate NISSAN Service Manual. Incorrect disposal procedures could cause personal injury.**

The pretensioner system may activate with the supplemental air bag system in certain types of collisions. Working with the seat belt retractor, it helps tighten the seat belt when the vehicle becomes involved in certain types of collisions, helping to restrain front seat occupants.

The pretensioner is encased with the seat belt retractor. These seat belts are used the same way as conventional seat belts.

When a pretensioner activates, smoke is released and a loud noise may be heard. The smoke is not harmful and does not indicate a fire. Care should be taken not to inhale it, as it may cause irritation and choking. Those with a history of a breathing condition should get fresh air promptly.

After pretensioner activation, load limiters allow the seat belt to release webbing (if necessary) to reduce forces against the chest.

The supplemental air bag warning light is used to indicate malfunctions in the pretensioner system. See "Supplemental air bag warning light" (P.1-57). If the operation of the supplemental air bag warning light indicates there is a malfunction, have the system checked. It is recommended you visit a NISSAN dealer for this service.

When selling your vehicle, we request that you inform the buyer about the pretensioner system and guide the buyer to the appropriate sections in this Owner's Manual.

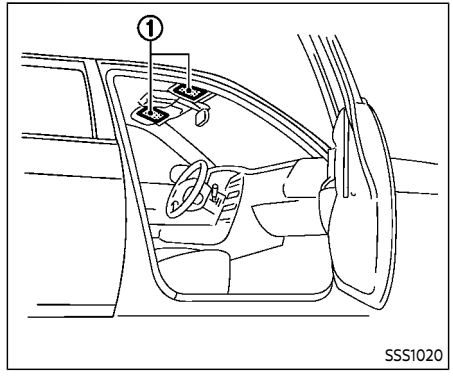

SUPPLEMENTAL AIR BAG WARNING LABELS

Warning labels about the supplemental front-impact air bag system are placed in the vehicle as shown in the illustration.

① SRS air bag

The warning labels are located on the surface of the sun visors.

WARNING

Do not use a rear-facing child restraint on a seat protected by an air bag in front of it. If the air bag

deploys, it may cause serious injury or death.

SUPPLEMENTAL AIR BAG WARNING LIGHT

The supplemental air bag warning light, displaying in the instrument panel, monitors the circuits for the air bag systems, pretensioners and all related wiring.

When the ignition switch is in the ON position, the supplemental air bag warning light illuminates for about 7 seconds and then turns off. This means the system is operational.

If any of the following conditions occur, the air bag and/or pretensioner systems need servicing:

- The supplemental air bag warning light remains on after approximately 7 seconds.
- The supplemental air bag warning light flashes intermittently.
- The supplemental air bag warning light does not come on at all.

Under these conditions, the air bag and/or pretensioner systems may not operate properly. They must be checked and repaired. It is recommended you visit a NISSAN dealer for this service.

WARNING

If the supplemental air bag warning light is on, it could mean that the front air bag, side air bag, curtain air bag and/or pretensioner systems will not operate in an accident. To help avoid injury to yourself or others, have your vehicle checked as soon as possible. It is recommended you visit a NISSAN dealer for this service.

REPAIR AND REPLACEMENT PROCEDURE

The front air bags, side air bags, curtain air bags and pretensioners are designed to activate on a one-time-only basis. As a reminder, unless it is damaged, the supplemental air bag warning light will remain illuminated after inflation has occurred. These systems should be repaired and/or replaced as soon as possible. It is recommended you visit a NISSAN dealer for this service.

When maintenance work is required on the vehicle, the front air bags, side air bags, curtain air bags and pretensioners and related parts should be pointed out to the person performing the maintenance. The ignition switch should always be in the LOCK position when working under the hood or inside the vehicle.

WARNING

- **Once a front air bag, side air bag or curtain air bag has inflated, the air bag module will not function again and must be replaced. Additionally, the activated pretensioners must also be replaced. The air bag module and pretensioner should be replaced. It is recommended you visit a NISSAN dealer for this service. However, the air bag modules and pretensioner system cannot be repaired.**
- **The front air bag, side air bag and curtain air bag systems, and pretensioner system should be inspected if there is any damage to the front end or side portion of the vehicle. It is recommended you visit a NISSAN dealer for this service.**
- **If you need to dispose of a supplemental air bag or pretensioner or scrap the vehicle, it is recommended you visit a NISSAN dealer. Correct supplemental air bag and pretensioner system disposal procedures are set forth in the appropriate NISSAN Service Manual. Incorrect disposal procedures could cause personal injury.**
- **If there is an impact to your vehicle from any direction, your Occupant Classification Sensor (OCS) should be checked to verify it is still functioning correctly. It is recommended that you visit a NISSAN dealer for this service. The OCS should be checked even if no air bags deploy as a result of the impact. Failure to verify proper OCS function may result in an improper air bag deployment resulting in injury or death.**

2 Instruments and controls

Cockpit 2-3
Instrument panel 2-4
Meters and gauges 2-5
Speedometer and odometer 2-6
Tachometer 2-7
Engine coolant temperature gauge 2-7
Fuel gauge 2-8
Instrument brightness control 2-9
Continuously Variable Transmission (CVT) position indicator (if so equipped) 2-9
Warning lights, indicator lights and audible reminders 2-10
Checking lights 2-10
Warning lights 2-10
Indicator lights 2-16
Audible reminders 2-17
Vehicle information display 2-18
How to use the vehicle information display 2-19
Startup display 2-19
Settings 2-19
Vehicle information display warnings and indicators 2-28
Trip computer 2-34
Clock and outside air temperature 2-36
Security systems 2-36
Vehicle Security System 2-36
NISSAN Vehicle Immobilizer System 2-38
Wiper and washer switch 2-39
Windshield wiper and washer operation 2-40
Rear window wiper and washer switch 2-41
Rear window and outside mirror defroster switch 2-42
Headlight and turn signal switch 2-43
Headlight switch 2-43
Turn signal switch 2-48
Fog light switch (if so equipped) 2-48
Horn 2-49
Heated steering wheel (if so equipped) 2-49
Heated seats (if so equipped) 2-50
Intelligent Lane Intervention (I-LI) switch (if so equipped) 2-51
Blind Spot Warning (BSW) switch (if so equipped) 2-51
Vehicle Dynamic Control (VDC) off switch 2-52
Intelligent 4x4 LOCK switch (if so equipped) 2-52
ECO mode switch 2-52
Power outlet 2-53
Storage 2-54
Cup holders 2-54

Soft bottle holders 2-54
Cargo area (if so equipped) 2-55
Glove box 2-56
Console box 2-56
Sunglasses holder 2-56
Card holder (driver's side) 2-57
Luggage hooks 2-57
Parcel shelf 2-58
Roof rack (if so equipped) 2-59
Windows 2-60
Power windows 2-60
Moonroof (if so equipped) 2-63
Power moonroof 2-63
Interior lights 2-65
Interior light switch 2-65
Console light (if so equipped) 2-66
Map lights 2-66
Room light 2-66
Vanity mirror light (if so equipped) 2-67
Cargo light 2-67

COCKPIT

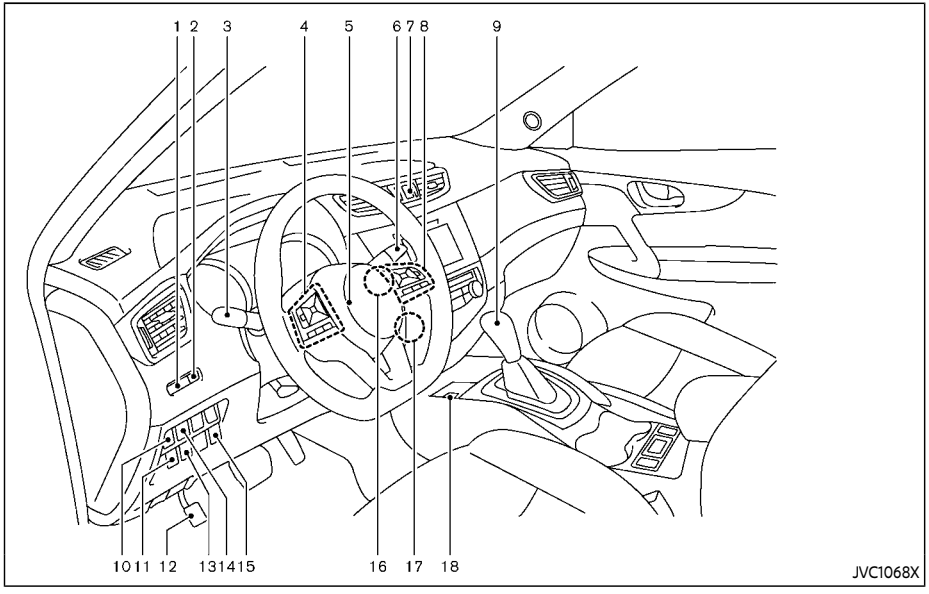

1. Instrument brightness control
2. TRIP RESET switch
3. Headlight and turn signal switch/Fog light switch*
4. Steering-wheel-mounted controls (left side)
   — Audio control* or Navigation system **
   — Vehicle information display control
5. Steering wheel
   — Horn
6. Wiper and washer switch
7. Hazard indicator flasher switch
8. Steering-wheel-mounted controls (right side)
   — Cruise control switches*
   — Intelligent Cruise Control (ICC) system*
   — Bluetooth® Hands-Free Phone System (without navigation system)*
   — Bluetooth® Hands-Free Phone System (with navigation system)*
   — Voice Recognition system switch*
   — Siri® Eyes Free
9. Shift lever
   — Continuously Variable Transmission (CVT)
   — Manual Transmission (MT)
10. Vehicle Dynamic Control (VDC) OFF switch
11. Heated steering wheel switch*
12. Parking brake (Pedal type)
13. Intelligent 4x4 LOCK switch*
14. Intelligent Lane Intervention (I-LI) switch* or Blind Spot Warning (BSW) switch*
15. ECO switch
16. Push-button ignition switch (model with Intelligent Key system)
17. Ignition switch (model without Intelligent Key system)
18. Parking brake (Switch type)

*: if so equipped

**: See the separate navigation system owner's manual (if so equipped).

INSTRUMENT PANEL

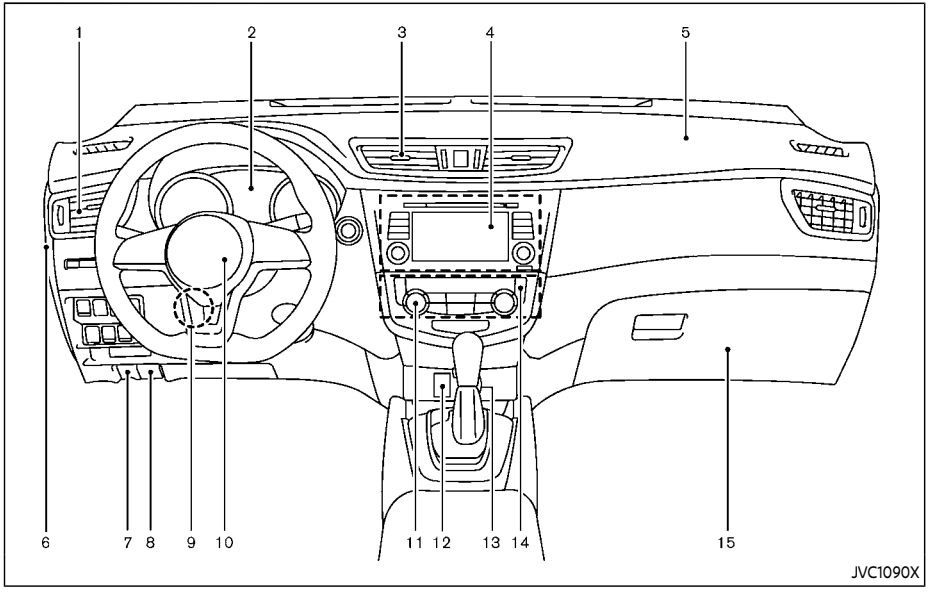

1. Side ventilator
2. Meters and gauges/Clock
3. Center ventilator
4. Audio system* or Navigation system**
   — RearView Monitor*
   — Intelligent Around View® Monitor*
   — Bluetooth® Hands-Free Phone System*
5. Front passenger supplemental air bag
6. Fuse box cover
7. Fuel-filler door release handle
8. Hood release handle
9. Steering wheel lock lever
10. Driver's front-impact air bag/Horn
11. Heater/air conditioner control
12. Auxiliary input jack and USB connection port
13. Power outlet
14. Defroster switch
15. Glove box

*: if so equipped

**: See the separate Navigation System Owner's Manual (if so equipped).

METERS AND GAUGES

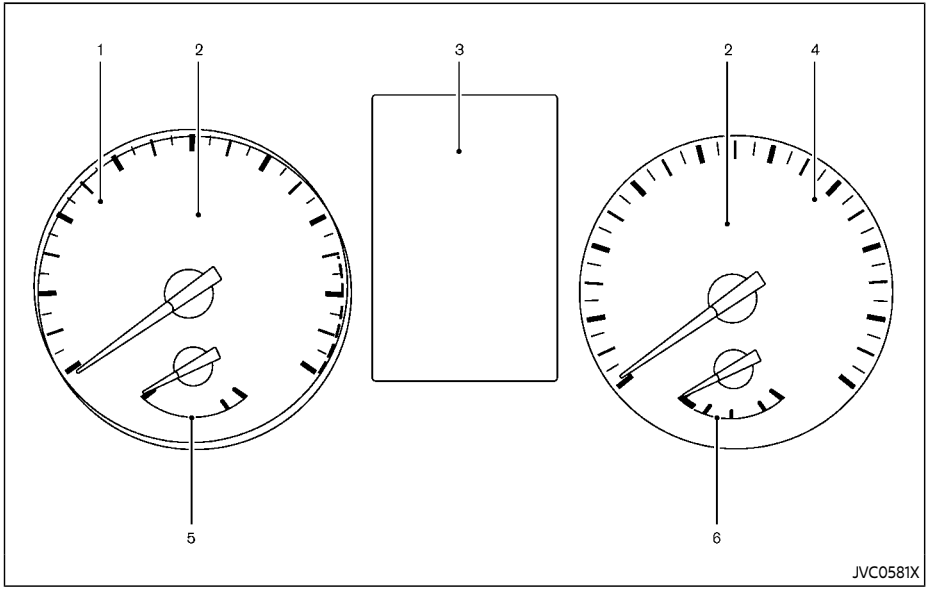

1. Tachometer
2. Warning/indicator lights
3. Vehicle information display
   — Odometer/twin trip odometer
4. Speedometer
5. Engine coolant temperature gauge
6. Fuel gauge

The needle indicators may move slightly after the ignition switch is placed in the OFF or LOCK position. This is not a malfunction.

CAUTION

- **For cleaning, use a soft cloth, dampened with water. Never use a rough cloth, alcohol, benzine, thinner or any kind of solvent or paper towel with a chemical cleaning agent. They will scratch or cause discoloration to the lens.**
- **Do not spray any liquid such as water on the meter lens. Spraying liquid may cause the system to malfunction.**

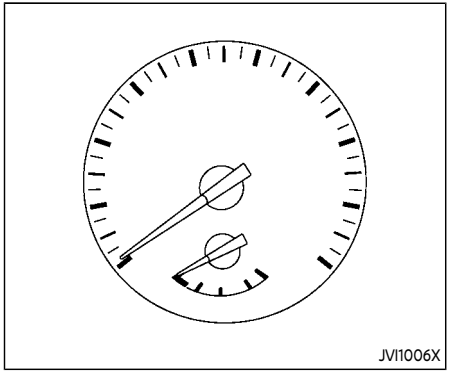

Speedometer

SPEEDOMETER AND ODOMETER

Speedometer

The speedometer indicates vehicle speed in miles per hour (MPH) and kilometers per hour (km/h).

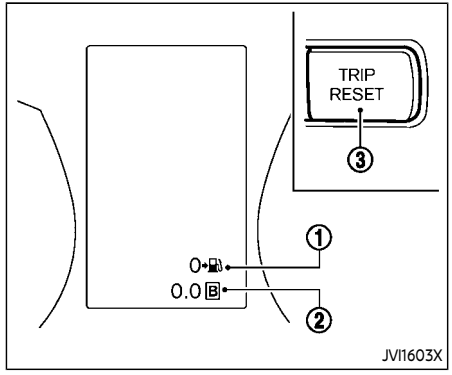

Distance to empty (dte — km or mile)/Odometer

Distance to empty (dte — km or mile):

The distance to empty (dte) ① provides you with an estimation of the distance that can be driven before refueling. The dte is constantly being calculated, based on the amount of fuel in the fuel tank and the actual fuel consumption.

The display is updated every 30 seconds.

The dte mode includes a low range warning feature. If the fuel level is low, the warning is displayed on the screen.

When the fuel level drops even lower, the dte display will change to "———".

- If the amount of fuel added is small, the display just before the ignition switch is placed in the "OFF" position may continue to be displayed.
- When driving uphill or rounding curves, the fuel in the tank shifts, which may momentarily change the display.

Odometer/Twin trip odometer:

After the ignition switch is placed in the OFF or LOCK position from ON position, the distance to empty and odometer/twin trip odometer stays on for 30 seconds. With the ignition switch in OFF position, when you open any door then close all doors, the odometer/twin trip odometer stays on for 30 seconds.

The odometer/twin trip odometer is displayed in the vehicle information display when the ignition switch is in the ON position.

The odometer ② displays the total distance the vehicle has been driven.

The twin trip odometer ② displays the distance of individual trips.

Changing display:

Push the TRIP RESET switch ③ (located on the instrument panel) to change the display as follows:

ODO → TRIP A → TRIP B → ODO

Resetting twin trip odometer:

Push the TRIP RESET switch ③ for more than 1 second to reset the trip odometer to zero.

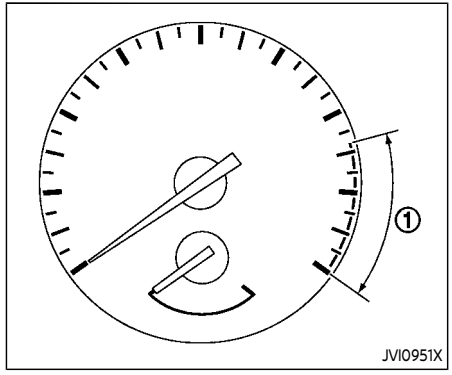

TACHOMETER

The tachometer indicates engine speed in revolutions per minute (RPM). **Do not rev the engine into the red zone ①.**

CAUTION

When engine speed approaches the red zone, shift to a higher gear or reduce engine speed. Operating the engine in the red zone may cause serious engine damage.

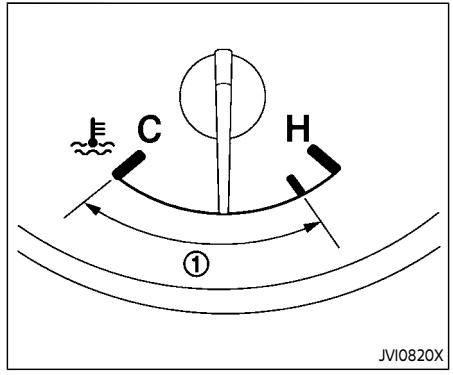

ENGINE COOLANT TEMPERATURE GAUGE

The engine coolant temperature gauge indicates the engine coolant temperature.

The engine coolant temperature is normal when the gauge needle points within the zone ① shown in the illustration.

The engine coolant temperature will vary with the outside air temperature and driving conditions.

CAUTION

- **If the gauge indicates the engine coolant temperature is near the hot (H) end of the normal range, reduce vehicle speed to decrease the temperature.**
- **If the gauge is over the normal range, stop the vehicle as soon as safely possible and let the engine idle.**
- **If the engine is overheated, continued operation of the vehicle may seriously damage the engine. (See "If your vehicle overheats" (P.6-11) for immediate action required.)**

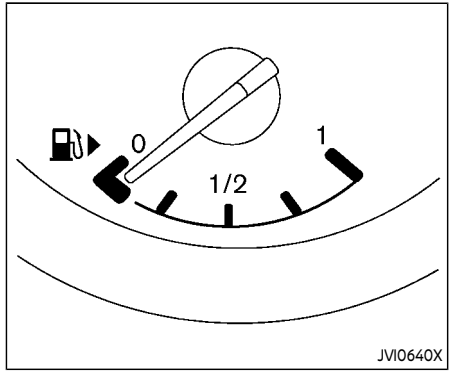

FUEL GAUGE

The fuel gauge indicates the approximate fuel level in the tank when the ignition switch is in the ON position.

The gauge may move slightly during braking, turning, accelerating, or going up and down hills due to movement of fuel in the tank.

The low fuel warning appears on the vehicle information display when the fuel level in the tank is getting low. Refuel as soon as it is convenient, preferably before the gauge reads 0 (empty).

The arrow, , indicates the location of the fuel-filler door.

Refuel before the gauge reads the empty (0) position.

There is a small reserve of fuel in the tank when the fuel gauge reads the empty (0) position.

CAUTION

- **If the vehicle runs out of fuel, the malfunction indicator light (MIL) may come on. Refuel as soon as possible. After a few driving trips, the light should turn off. If the light remains on after a few driving trips, have the vehicle inspected. It is recommended you visit a NISSAN dealer for this service.**
- **For additional information, see "Malfunction Indicator Light (MIL)" (P.2-16).**

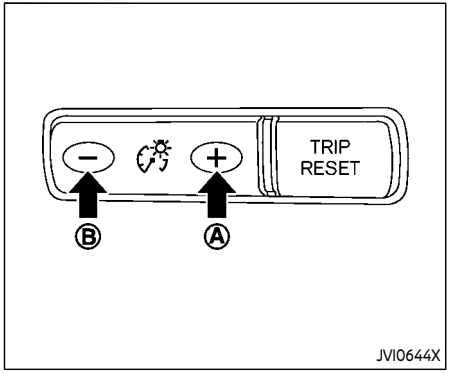

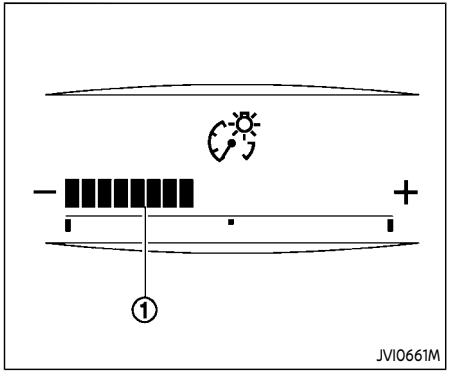

INSTRUMENT BRIGHTNESS CONTROL

The instrument brightness control switch can be operated when the ignition switch is in the ON position. When the switch is operated, the vehicle information display switches to the brightness adjustment mode.

Push the + side of the switch Ⓐ to brighten the meter panel lights. The bar ① moves to the + side.

Push the - side of the switch Ⓑ to dim the lights. The bar ① moves to the – side.

The vehicle information display returns to the normal display when the instrument brightness control switch is not operated for more than 5 seconds.

CONTINUOUSLY VARIABLE TRANSMISSION (CVT) POSITION INDICATOR (if so equipped)

The Continuously Variable Transmission (CVT) position indicator indicates the shift lever position when the ignition switch is in the ON position.

WARNING LIGHTS, INDICATOR LIGHTS AND AUDIBLE REMINDERS

ABS	Anti-lock Braking System (ABS) warning light		Low tire pressure warning light		High beam indicator light
			Master warning light		Malfunction Indicator Light (MIL)
BRAKE	Brake warning light (red)		Seat belt warning light		Security indicator light
			Supplemental air bag warning light		Turn signal/hazard indicator lights
	Charge warning light		Vehicle Dynamic Control (VDC) warning light	OFF	Vehicle Dynamic Control (VDC) off indicator light
	Electric power steering warning light	AWD LOCK	All-Wheel Drive (AWD) LOCK indicator light (if so equipped)		
	Electronic parking brake system warning light (yellow) (if so equipped)		Exterior light indicator		
	Electronic parking brake warning light (if so equipped)		Front fog light indicator light (if so equipped)		
	Automatic Emergency Braking (AEB) system warning light (if so equipped)		High beam assist indicator light (if so equipped)		

CHECKING LIGHTS

With all doors closed, apply the parking brake, fasten the seat belts and place the ignition switch in the ON position without starting the engine. The following lights (if so equipped) will come on:

, , BRAKE or (red), , .

The following lights (if so equipped) come on briefly and then go off:

AWD LOCK, OFF, , , , ABS or , , (red), (yellow).

If any light does not come on or operates in a way other than described, it may indicate a burned-out bulb and/or a system malfunction. It is recommended you have the system checked by a NISSAN dealer.

WARNING LIGHTS

ABS or Anti-lock Braking System (ABS) warning light

When the ignition switch is in the ON position, the Anti-lock Braking System (ABS) warning light illuminates and then turns off. This indicates the ABS is operational.

If the ABS warning light illuminates while the engine is running, or while driving, it may indicate the ABS is not functioning properly. Have the system checked. It is

recommended you visit a NISSAN dealer for this service.

If an ABS malfunction occurs, the anti-lock function is turned off. The brake system then operates normally, but without anti-lock assistance. (See "Brake system" (P.5-106).)

BRAKE or (!) Brake warning light (red)

This light functions for both the parking brake and the foot brake systems.

Parking brake indicator (models not equipped with electronic parking brake system):

When the ignition switch is in the ON position, the light illuminates when the parking brake is applied.

Low brake fluid warning light:

When the ignition switch is placed in the ON position, the brake warning light illuminates, and then turns off (models equipped with electronic parking brake system). If the light illuminates while the engine is running with the parking brake not applied, stop the vehicle and perform the following:

1. Check the brake fluid level. If brake fluid is necessary, add fluid and have the system checked. It is recommended you have this service performed by a NISSAN dealer. (See "Brake and clutch fluid" (P.8-9).)
2. If the brake fluid level is correct, have the warning system checked. It is recommended you have this service performed by a NISSAN dealer.

Anti-lock Braking System (ABS) warning indicator:

When the parking brake is released and the brake fluid level is sufficient, if both the brake warning light and the Anti-lock Braking System (ABS) warning light illuminate, it may indicate the ABS is not functioning properly. Have the brake system checked, and if necessary repaired. It is recommended you visit a NISSAN dealer for this service. (See "Anti-lock Braking System (ABS) warning light" (P.2-10).)

WARNING

- **Your brake system may not be working properly if the warning light is on. Driving could be dangerous. If you judge it to be safe, drive carefully to the nearest service station for repairs. Otherwise, have your vehicle towed because driving it could be dangerous.**
- **Pressing the brake pedal with the engine stopped and/or low brake fluid level may increase your stopping distance and braking will require greater pedal effort as well as pedal travel.**
- **If the brake fluid level is below the minimum or MIN mark on the brake fluid reservoir, do not drive until the brake system has been checked. It is recommended you visit a NISSAN dealer for this service.**

Charge warning light

If the light illuminates while the engine is running, it may indicate the charging system is not functioning properly. Turn the engine off and check the alternator belt. If the belt is loose, broken, missing or if the light remains on, have your vehicle serviced immediately. It is recommended you visit a NISSAN dealer for this service.

CAUTION

Do not continue driving if the alternator belt is loose, broken or miss-

ing.

Electric power steering warning light

When the ignition switch is in the ON position, the electric power steering warning light illuminates. After starting the engine, the electric power steering warning light turns off. This indicates the electric power steering is operational.

If the electric power steering warning light illuminates while the engine is running, it may indicate the electric power steering is not functioning properly and may need servicing. Have the system checked. It is recommended that you visit a NISSAN dealer for this service.

When the electric power steering warning light illuminates with the engine running, the power assist to the steering will cease operation but you will still have control of the vehicle. At this time, greater steering efforts are required to operate the steering wheel, especially in sharp turns and at low speeds.

(See “Electric power steering” (P.5-105).)

Electronic parking brake system warning light (yellow) (if so equipped)

The electronic parking brake system warning light functions for the electronic parking brake system. When the ignition switch is placed in the ON position, the light illuminates for a few seconds. If the warning light illuminates at any other time, it may indicate that the electronic parking brake system is not functioning properly. Have the brake system checked, and, if necessary, repaired. It is recommended that you visit a NISSAN dealer for this service.

Electronic parking brake warning light (if so equipped)

The electronic parking brake warning light indicates that the electronic parking brake system is operating.

When the ignition switch is placed in the ON position, the electronic parking brake warning light illuminates. When the engine is started and the parking brake is released, the warning light turns off.

If the parking brake is not fully released, the electronic parking brake warning light remains on. Be sure that the electronic parking brake warning light has turned off before driving. (See “Parking brake” (P.5-27).)

If the electronic parking brake warning light illuminates or flashes while the electronic parking brake system warning light (yellow) illuminates, it may indicate that the electronic parking brake system is not functioning properly. Have the brake system checked, and if necessary repaired. It is recommended you visit a NISSAN dealer for this service.

Automatic Emergency Braking (AEB) system warning light (if so equipped)

When the ignition switch is in the ON position, the AEB system warning light illuminates. After starting the engine, the warning light turns off.

This light illuminates when the AEB system is set to OFF on the vehicle information display.

If the light illuminates when the AEB system is ON, it may indicate that the system is unavailable. See “Automatic Emergency Braking (AEB)” (P.5-82) or “Automatic Emergency Braking (AEB) with pedestrian detection system” (P.5-89).

Low tire pressure warning light

Your vehicle is equipped with a Tire Pressure Monitoring System (TPMS) that monitors the tire pressure of all tires except the spare tire.

The low tire pressure warning light warns of low tire pressure or indicates that the TPMS is not functioning properly.

After the ignition switch is placed in the ON position, this light illuminates for about 1 second and turns off.

Low tire pressure warning:

If the vehicle is being driven with low tire pressure, the warning light will illuminate. The "Tire Pressure Low - Add Air" warning also appears in the vehicle information display.

When the low tire pressure warning light illuminates, you should stop and adjust the tire pressure to the recommended COLD tire pressure shown on the Tire and Loading Information label. The low tire pressure warning light does not automatically turn off when the tire pressure is adjusted. After the tire is inflated to the recommended pressure, the vehicle must be driven at speeds above 16 MPH (25 km/h) to activate the TPMS and turn off the low tire pressure warning light. Use a tire pressure gauge to check the tire pressure.

The "Tire Pressure Low - Add Air" warning is active as long as the low tire pressure warning light remains illuminated.

For additional information, see "Vehicle information display" (P.2-18), "Tire Pressure Monitoring System (TPMS)" (P.5-5) and "Tire Pressure Monitoring System (TPMS)" (P.6-3).

TPMS malfunction:

If the TPMS is not functioning properly, the low tire pressure warning light will flash for approximately 1 minute when the ignition switch is placed in the ON position. The light will remain on after the 1 minute. Have the system checked. It is recommended you visit a NISSAN dealer for this service. The "Tire Pressure Low - Add Air" warning does not appear if the low tire pressure warning light illuminates to indicate a TPMS malfunction.

For additional information, see "Tire Pressure Monitoring System (TPMS)" (P.5-5).

WARNING

- **If the light does not illuminate with the ignition switch placed in the ON position, have the vehicle checked. It is recommended you visit a NISSAN dealer for this service as soon as possible.**
- **If the light illuminates while driving, avoid sudden steering maneuvers or abrupt braking, reduce vehicle speed, pull off the road to a safe location and stop the vehicle as soon as possible. Driving with under-inflated tires may permanently damage the tires and increase the likelihood of tire failure. Serious vehicle damage could occur and may lead to an accident and could result in serious personal injury. Check the tire pressure for all four tires. Adjust the tire pressure to the recommended COLD tire pressure shown on the Tire and Loading Information label to turn the low tire pressure warning light OFF. If the light still illuminates while driving after adjusting the tire pressure, a tire may be flat or the TPMS may be malfunctioning. If you have a flat tire, replace it with a spare tire as soon as possible. If no tire is flat and all tires are properly inflated, it is recommended you consult a NISSAN dealer.**

- **Since the spare tire is not equipped with the TPMS, when a spare tire is mounted or a wheel is replaced, the TPMS will not function and the low tire pressure warning light will flash for approximately 1 minute. The light will remain on after 1 minute. Have your tires replaced and/or TPMS system reset as soon as possible. It is recommended you visit a NISSAN dealer for these services.**
- **Replacing tires with those not originally specified by NISSAN could affect the proper operation of the TPMS.**

CAUTION

- **The TPMS is not a substitute for the regular tire pressure check. Be sure to check the tire pressure regularly.**
- **If the vehicle is being driven at speeds of less than 16 MPH (25 km/h), the TPMS may not operate correctly.**
- **Be sure to install the specified size of tires to the four wheels correctly.**

Master warning light

When the ignition switch is in the ON position, the master warning light illuminates if any of the following are displayed on the vehicle information display.

- No Key detected warning (if so equipped)
- Shift to Park warning (Continuously Variable Transmission (CVT) models) (if so equipped)
- Key battery low warning (if so equipped)
- Engine start operation for Intelligent Key system indicator (if so equipped)
- Key ID incorrect warning (if so equipped)
- Release Parking Brake warning
- Low fuel level warning
- Low Washer Fluid (if so equipped)
- Door/liftgate open warning
- Key System Error: See Owner's Manual warning (if so equipped)
- Loose Fuel Cap
- Tire Pressure Low - Add Air warning
- Low oil pressure Stop vehicle warning
- AWD Error: See Owner's Manual warning (if so equipped)
- AWD High Temp. Stop vehicle warning (if so equipped)
- Tire Size Incorrect: See Owner's Manual warning (if so equipped)
- Battery Voltage Low Charge Battery warning
- Shipping Mode On Push Storage Fuse warning (if so equipped)
- Power will turn off to save the battery warning
- Power turned off to save the battery warning
- Reminder: Turn OFF Headlights warning
- Headlight System Error: See Owner's Manual warning (if so equipped)
- Timer Alert - Time for a driver break? indicator (if so equipped)
- Chassis Control System Error: See Owner's Manual warning
- CVT Error: See Owner's Manual warning (for Continuously Variable Transmission (CVT) models)
- Malfunction warning (if so equipped)
- Unavailable: High Cabin Temperature warning (if so equipped)

- Not Available: Poor Road Conditions warning (if so equipped)
- Currently unavailable warning (if so equipped)
- Unavailable: Front Radar Obstruction warning (if so equipped)
- Unavailable: Side Radar Obstruction warning (if so equipped)
- Other warning

See "Vehicle information display" (P.2-18).

Seat belt warning light

The light and chime remind you to fasten seat belts. The light illuminates whenever the ignition switch is placed in the ON or START position, and will remain illuminated until the driver's seat belt is fastened. At the same time, the chime will sound for about 6 seconds unless the driver's seat belt is securely fastened.

The seat belt warning light for the front passenger will illuminate if the seat belt is not fastened when the front passenger's seat is occupied.

See "Seat belts" (P.1-10) for precautions on seat belt usage.

Supplemental air bag warning light

After placing the ignition switch in the ON or START position, the supplemental air bag warning light will illuminate. The supplemental air bag warning light will turn off after about 7 seconds if the supplemental front air bag and supplemental side air bag, curtain air bag systems and/or pretensioner seat belt are operational.

If any of the following conditions occur, the front air bag, side air bag, curtain air bag and pretensioner systems need servicing.

- The supplemental air bag warning light remains on after approximately 7 seconds.
- The supplemental air bag warning light flashes intermittently.
- The supplemental air bag warning light does not illuminate at all.

It is recommended you visit a NISSAN dealer for these services.

Unless checked and repaired, the Supplemental Restraint Systems and/or the pretensioners may not function properly.

For additional information, see "Supplemental Restraint System (SRS)" (P.1-40).

WARNING

If the supplemental air bag warning light is on, it could mean that the front air bag, side air bag, curtain air bag and/or pretensioner systems will not operate in an accident. To help avoid injury to yourself or others, have your vehicle checked. It is recommended you visit a NISSAN dealer for this service.

Vehicle Dynamic Control (VDC) warning light

When the ignition switch is in the ON position, the Vehicle Dynamic Control (VDC) warning light illuminates and then turns off.

The light will blink when the Vehicle Dynamic Control (VDC) system or the traction control system is operating, thus alerting the driver that the vehicle is nearing its traction limits. The road surface may be slippery.

If the VDC warning light illuminates while the VDC system is on, this light alerts the driver to the fact that the VDC system's fail-safe mode is operating, for example the VDC system may not be functioning

properly. Have the system checked. It is recommended you visit a NISSAN dealer for this service. If a malfunction occurs in the system, the VDC system function will be canceled but the vehicle is still driveable. For additional information, see "Vehicle Dynamic Control (VDC) system" (P.5-108) of this manual.

INDICATOR LIGHTS

All-Wheel Drive (AWD) LOCK indicator light (if so equipped)

When the ignition switch is in the ON position, the All-Wheel Drive (AWD) LOCK indicator light illuminates and then turns off.

When selecting LOCK mode while the engine is running, the LOCK indicator light illuminates. (See "Intelligent 4x4" (P.5-100).)

CAUTION

Do not drive on dry hard surface roads in the LOCK mode.

Exterior light indicator

This indicator illuminates when the headlight switch is turned to the AUTO (if so equipped), or position and the front parking lights, rear combination lights, license plate lights or headlights are on. The indicator turns off when these lights are turned off.

Front fog light indicator light (if so equipped)

The front fog light indicator light illuminates when the front fog lights are on. (See "Fog light switch" (P.2-48).)

High beam assist indicator light (if so equipped)

The indicator light illuminates when the headlights come on while the headlight switch is in the AUTO position with the high beam selected. This indicates that the high beam assist system is operational. (See "High beam assist" (P.2-45).)

High beam indicator light

This light illuminates when the headlight high beam is on and goes out when the low beam is selected.

Malfunction Indicator Light (MIL)

If the malfunction indicator light comes on steady or blinks while the engine is running, it may indicate a potential emission control and/or Continuously Variable Transmission (CVT) malfunction.

The malfunction indicator light may also illuminate steady if the fuel-filler cap is loose or missing, or if the vehicle runs out of fuel. Check to make sure the fuel-filler cap is installed and closed tightly, and that the vehicle has at least 3 US gallons (11.4 liters) of fuel in the fuel tank.

After a few driving trips, the light should turn off if no other potential emission control system malfunction exists.

If this indicator light remains on for 20 seconds and then blinks for 10 seconds when the engine is not running, it indicates that the vehicle is not ready for an emission control system inspection/maintenance test. (See "Readiness for Inspection/Maintenance (I/M) test" (P.10-

18).)

Operation:

The malfunction indicator light will come on in one of two ways:

- Malfunction indicator light on steady — An emission control system and/or CVT malfunction has been detected. Check the fuel-filler cap if the LOOSE FUEL CAP warning appears in the vehicle information display. If the fuel-filler cap is loose or missing, tighten or install the cap and continue to drive the vehicle. The light should turn off after a few driving trips. If the light does not turn off after a few driving trips, have the vehicle inspected. It is recommended you visit a NISSAN dealer for this service. You do not need to have your vehicle towed to the dealer.
- Malfunction indicator light blinking — An engine misfire has been detected which may damage the emission control system.

  To reduce or avoid emission control system damage:

  1) Do not drive at speeds above 45 MPH (72 km/h).
  2) Avoid hard acceleration or deceleration.
  3) Avoid steep uphill grades.
  4) If possible, reduce the amount of cargo being hauled or towed.

  The malfunction indicator light may stop blinking and remain on.

  Have the vehicle inspected. It is recommended you visit a NISSAN dealer for this service. You do not need to have your vehicle towed to the dealer.

CAUTION

Continued vehicle operation without having the emission control system and/or CVT system checked and repaired as necessary could lead to poor driveability, reduced fuel economy, and possible damage to the emission control system.

Security indicator light

The light blinks when the ignition switch is in the OFF or LOCK position. This function indicates the security system equipped on the vehicle is operational.

If the security system is malfunctioning, this light will remain on while the ignition switch is in the ON position. For additional information, see "Security systems" (P.2-36).

Turn signal/hazard indicator lights

The light flashes when the turn signal switch lever or hazard switch is turned on.

Vehicle Dynamic Control (VDC) off indicator light

When the ignition switch is in the ON position, the Vehicle Dynamic Control (VDC) off indicator light illuminates and then turns off.

The light comes on when the Vehicle Dynamic Control (VDC) off switch is pushed to OFF. This indicates that the VDC system and traction control system are not operating.

AUDIBLE REMINDERS

Key reminder chime

Models with Intelligent Key:

A chime sounds if the driver's door is opened while the ignition switch is placed in the OFF position with the Intelligent Key left in the vehicle.

Make sure the ignition switch is placed in the LOCK position, and carry it with you when leaving the vehicle.

Models without Intelligent Key:

A chime sounds if the driver's side door is opened while the key is left in the ignition switch and the ignition switch is in the OFF or LOCK position. Be sure to remove the key and carry it with you when you leave the vehicle.

Light reminder chime

The light reminder chime will sound when the driver side door is opened with the headlight switch in the ≣DⱭ≡ or ≣D position, and the ignition switch is in the ACC, OFF or LOCK position.

Turn the light switch off when you leave the vehicle.

NISSAN Intelligent Key® door buzzer (if so equipped)

The Intelligent Key door buzzer sounds if any one of the following improper operations is found.

- The Intelligent Key is left inside the vehicle when locking the doors.
- The Intelligent Key is left outside the vehicle when operating the vehicle.

When the buzzer sounds, be sure to check both the vehicle and the Intelligent Key. For additional information, refer to "Intelligent Key system" (P.3-11).

Brake pad wear warning

The disc brake pads have audible wear warnings. When a brake pad requires replacement, it will make a high pitched scraping sound when the vehicle is in motion. This scraping sound will first occur only when the brake pedal is depressed. After more wear of the brake pad, the sound will always be heard even if the brake pedal is not depressed. Have the brakes checked as soon as possible if the warning sound is heard.

Parking brake reminder chime

The parking brake reminder chime will sound if the vehicle is driven at more than 4 MPH (7 km/h) (models not equipped with electronic parking brake) or 2 MPH (4 km/h) (models equipped with electronic parking brake) with the parking brake applied. Stop the vehicle and release the parking brake.

Seat belt warning chime

The seat belt warning chime will sound for about 6 seconds unless the driver's seat belt is securely fastened.

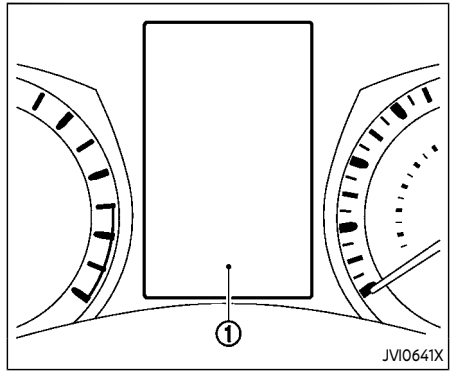

The vehicle information display ① is located between the tachometer and the speedometer, and it displays the warnings and information. The following items are also displayed if the vehicle is equipped with them:

- Vehicle settings
- Trip computer information
- Driver Assistance
- Cruise control system information
- Intelligent Cruise Control (ICC) system
- Intelligent Key operation information
- Audio information
- Navigation - turn by turn

- Indicators and warnings
- Tire pressure information
- Chassis Control
- Other information

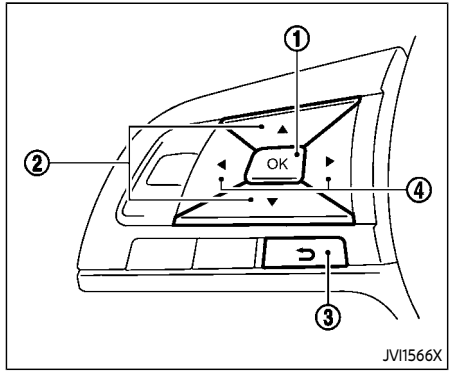

HOW TO USE THE VEHICLE INFORMATION DISPLAY

The vehicle information display can be changed using the buttons OK ①, ▲▼ ②, ↩ ③, and ◀ ▶ ④ located on the steering wheel.

① OK - change or select an item in the vehicle information display

② ▲▼ - navigate through the items in vehicle information display

③ ↩ - go back to the previous menu

④ ◀ ▶ - change from one display screen to the next (i.e. trip, Fuel economy)

STARTUP DISPLAY

When the ignition switch is placed in the ON position, the screens that display in the vehicle information display include:

- Trip computer
- Fuel economy
- Warnings

Warnings will only display if there are any present. For more information on warnings and indicators, see "Vehicle information display warnings and indicators" (P.2-28).

To control what items display in the vehicle information display, see "Settings" (P.2-19).

SETTINGS

The setting mode allows you to change the information displayed in the vehicle information display:

- Driver Assistance (if so equipped)
- Clock
- Meter Settings
- Vehicle Settings
- Maintenance
- Alarm (if so equipped)
- Tire Pressures
- Unit
- Language

- Factory Reset

Driver Assistance (if so equipped)

To change the status, warnings or turn on or off any of the systems/warnings displayed in the "Driver Assistance" menu, use the ⬍ buttons ② to select and the OK ① to change a menu item:

- Driving Aids (if so equipped)
- Parking Aids (if so equipped)
- Chassis Control (if so equipped)
- Power Steering (if so equipped)

Driving Aids (if so equipped):

To change the status, warnings or turn on or off any of the systems/warnings displayed in the "Driving Aids" menu, use the ⬍ buttons ② to select and the OK ① to change a menu item:

- Emergency Brake (if so equipped)
  — Press the OK ① to turn the Automatic Emergency Braking (AEB) system ON/OFF.
- Lane (if so equipped)
  — Warning
  Press the OK ① to turn the Lane Departure Warning (LDW) system ON/OFF.
- Blind Spot (if so equipped)
  — Warning
  Press the OK ① to turn the Blind Spot Warning (BSW) system ON/OFF.

For additional information, see "Automatic Emergency Braking (AEB)" (P.5-82), "Automatic Emergency Braking (AEB) with pedestrian detection system" (P.5-89), "Lane Departure Warning (LDW)" (P.5-32) and "Blind Spot Warning (BSW)" (P.5-42).

Parking Aids (if so equipped):

To change the status or turn on or off any of the systems displayed in the "Parking Aids" menu, use the ⬍ buttons ② to select and the OK ① to change a menu item:

- Moving Object (if so equipped)
  Press the OK ① to turn the Moving Object Detection (MOD) ON/OFF.
- Cross Traffic (if so equipped)
  Press the OK ① to turn the Rear Cross Traffic Alert (RCTA) ON/OFF.

For additional information, see "Moving Object Detection (MOD)" (P.4-25)and "Rear Cross Traffic Alert (RCTA)" (P.5-52).

Chassis Control:

To change the status, warnings or turn on or off any of the systems/warnings displayed in the "Chassis Control" menu.

Use the ⬍ buttons ② to select and the OK ① to change a menu item:

- Trace Control
  — See "Intelligent Trace Control" (P.5-110) for more information.
- Engine Brake (if so equipped)
  — See "Intelligent Engine Brake (Continuously Variable Transmission (CVT) models)" (P.5-111) for more information.

Press the OK ① to turn ON/OFF.

Power Steering:

Use the ⬍ buttons ② to select and the OK ① to change a menu item:

- NORMAL
  The NORMAL mode is recommended for normal driving.
- SPORT
  The SPORT mode adjusts the steering to enhance performance.

Clock

To set the clock, see "Displaying settings menu" (P.4-5), "Audio main operation" (P.4-48) or "Audio main operation" (P.4-63) in this manual or the separate Navigation System Owner's Manual (if so equipped).

Meter Settings

The meter settings allows the customer to choose from the various meter selections.

The meter settings can be changed using the ▲▼ ② and the OK ① buttons.

Main Menu Selection:

The items that display when the ignition switch is placed in the ON position can be enabled/disabled. To change the items that are displayed, use the ▲▼ ② to scroll and the OK ① to select a menu item.

Body Color:

The color of the vehicle that displays in the vehicle information display when the ignition switch is placed in the ON position can be changed.

1. Use the ▲▼ buttons ② until "Body Color" is selected, and press OK ①.
2. Select the body color using the ▲▼ buttons ② and press OK ①.

ECO Mode Settings:

This setting allows the customer to change the ECO mode system settings.

Use the ▲▼ buttons ② until "ECO Mode Settings" is selected, and press OK ①.

- ECO Indicator

This setting allows the customer to enable/disable the ambient ECO indicator in the vehicle information display.

1. Use the ▲▼ buttons ② to select "ECO Indicator".
2. Press the OK ① to turn ON/OFF the ambient ECO in the vehicle information display.

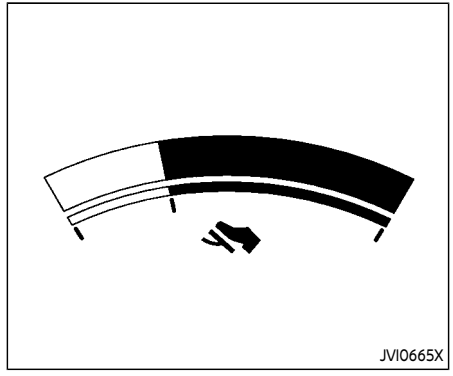

- DISP Mode

This setting allows the customer to enable/disable the ECO pedal guide function.

1. Use the ▲▼ buttons ② to select "DISP Mode".
2. Press the OK ① to select "Pedal" or "Inst.FE.".

For detailed information, see "ECO mode system" (P.5-29).

ECO Drive Report:

- Display

This setting allows the customer to enable/disable the ECO Drive Report in the vehicle information display.

1. Use the ▲▼ buttons ② to select "Display".
2. Press the OK ① to turn ON/OFF the ECO management display in the vehicle information display.

- View History

This setting allows the customer to reset the past history of the fuel economy and the best fuel economy.

Welcome Effect:

You can choose whether or not to display the welcome screen when the ignition switch is placed in the ON position. You can also choose the following items to define how the welcome screen looks:

- Dial Effect
- Display Effect

Select "Welcome Effect" using the ▲▼ buttons ② and press the OK ① to select this menu. Use the ▲▼ buttons ② to navigate between the menu options and press the OK ① to turn each function ON/OFF.

Vehicle Settings

The vehicle settings allows the customer to change settings for the following settings.

- Lighting
- Turn indicator
- Locking
- Wipers
- Remote start (if so equipped)

The vehicle settings can be changed using the ▲▼ ②, and the OK ① buttons.

Lighting:

The "Lighting" menu has the following options:

- Welcome Light
  The welcome lighting can be set to be ON or OFF. From the "Lighting" menu, select "Welcome Light". Use the OK ① to turn this feature ON or OFF.
- Auto Room Lamp
  The interior light timer can be set to be ON or OFF. From the "Lighting" menu, select "Auto Room Lamp". Use the OK ① to turn this feature ON or OFF.
- Light Sensitivity (if so equipped)
  The sensitivity of the Intelligent Auto Headlight can be adjusted. From the "Lighting" menu, select "Light Sensitivity". Use the ▲▼ buttons ② and the OK ① to select the required sensitivity. The following options are available:
  — Turn on earliest
  — Turn on earlier
  — Turn on standard
  — Turn on later
- Light Off Delay (if so equipped)
  The duration of the automatic headlights can be changed from 0 to 180 seconds. From the "Lighting" menu, select "Light Off Delay". Use the OK ① to change the duration.

Turn indicator:

The "3 Flash Pass" overtaking feature can be set to be ON or OFF. From the "Turn indicator" menu, select "3 Flash Pass". Use the OK ① to turn this feature ON or OFF.

Locking:

There are the following options in the "Locking" menu:

- I-Key Door Lock (if so equipped)
  When this item is turned on, the request switch on the door is activated. From the "Locking" menu, select "I-Key Door Lock". Use the OK ① to activate or deactivate this function.
- Selective Unlock
  When this item is turned on, and the door handle request switch on the driver's or front passenger's side door

is pushed, only the corresponding door is unlocked. All the doors can be unlocked if the door handle request switch is pushed again within 1 minute. When this item is turned to off, all the doors will be unlocked when the door handle request switch is pushed once. From the "Locking" menu, select "Selective Unlock". Use the OK ① to activate or deactivate this function.

- Auto Door Unlock

  The "Auto Door Unlock" feature allows the customer to customize the auto door unlock options.

  — Ignition OFF
  — Shift to Park (for Continuously Variable Transmission (CVT) models)
  — Off

- Answer Bk. Horn (if so equipped)

  When the answer back horn is on, the horn will chirp and the hazard indicators will flash twice when locking the vehicle with the Intelligent Key or remote keyless entry function.

Wipers:

- Speed Dependent

  The "Speed Dependent" feature can be activated or deactivated. From the "Wipers" menu, select "Speed Dependent". Use the OK ① to turn this feature ON or OFF.

- Reverse Link

  The "Reverse Link" wiper feature can be set to be ON or OFF. From the "Wipers" menu, select "Reverse Link". Use the OK ① to turn this feature ON or OFF.

- Drip wipe

  The "Drip wipe" feature can be set to be ON or OFF. From the "Wipers" menu, select "Drip wipe". Use the OK ① to turn this feature ON or OFF.

Remote start (if so equipped):

The "Remote start" feature allows user to turn the remote engine start on or off. When turned on, the engine can be restarted remotely. For additional information, refer to "Remote engine start" (P.3-22).

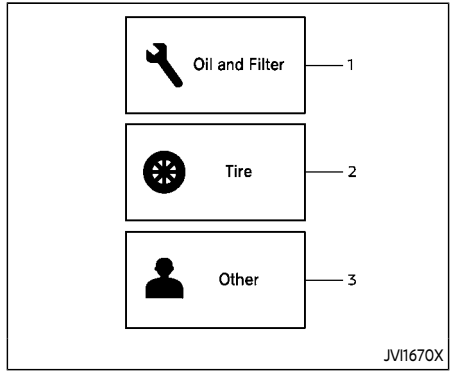

1. Oil and Filter
2. Tire
3. Other

Maintenance

The maintenance mode allows you to set alerts for the reminding of maintenance intervals. To change an item:

Select "Maintenance" using the ⬍ switch ② and press OK ①.

Oil and Filter:

This indicator appears when the customer set distance comes for changing the engine oil and filter. You can set or reset the distance for checking or replacing

these items. For scheduled maintenance items and intervals, refer to the "9. Maintenance and schedules" section.

Tire:

This indicator appears when the customer set distance comes for replacing tires. You can set or reset the distance for replacing tires.

WARNING

The tire replacement indicator is not a substitute for regular tire checks, including tire pressure checks. See "Changing wheels and tires" (P.8-37). Many factors including tire inflation, alignment, driving habits and road conditions affect tire wear and when tires should be replaced. Setting the tire replacement indicator for a certain driving distance does not mean your tires will last that long. Use the tire replacement indicator as a guide only and always perform regular tire checks. Failure to perform regular tire checks, including tire pressure checks could result in tire failure. Serious vehicle damage could occur and may lead to a collision, which could result in serious personal injury or death.

Other:

This indicator appears when the customer set distance comes for checking or replacing maintenance items other than the engine oil, oil filter and tires. Other maintenance items can include such things as air filter or tire rotation. You can set or reset the distance for checking or replacing the items.

Alarm (if so equipped)

This setting allows the customer to set alarms.

Select "Alarm" using the ⬍ button ② and press OK button ①.

Timer Alert (if so equipped):

This setting allows the customer to set an alert to notify the driver that the set time has been reached.

1. Use the ⬍ button ② to select "Timer Alert".
2. Press the OK button ①.
3. To change the timer amount, use the ⬍ button ② and the OK button ① to save the selected time amount.

Navigation (if so equipped):

This setting allows the customer to enable/disable the alert for navigation in the vehicle information display.

1. Use the ⬍ button ② to select "Navigation".
2. Press the OK button ① to turn ON/OFF the alert.

Phone (if so equipped):

This setting allows the customer to enable/disable the alert for an incoming call in the vehicle information display.

1. Use the ⬍ button ② to select "Phone".
2. Press the OK button ① to turn ON/OFF the alert.

Mail (if so equipped):

This setting allows the customer to enable/disable the alert for navigation in the vehicle information display.

1. Use the ⬍ button ② to select "Mail".
2. Press the OK button ① to turn ON/OFF the alert.

Tire Pressures

The settings in the "Tire pressures" menu are all related to the Tire Pressure Monitoring System (TPMS). (See "Tire Pressure Monitoring System (TPMS)" (P.5-5), "Tire Pressure Monitoring System (TPMS)" (P.6-3), "Tire Pressure Monitoring System (TPMS)" (P.8-29).)

Tire Pressure Unit:

The unit for tire pressure that displays in the vehicle information display can be changed to:

- psi
- kPa
- bar
- Kgf/cm^2

Use the ▲▼ button ② and the OK button ① to select and change the unit.

If necessary, refer to the following table to convert between units.

kPa	200	210	220	230	240	250	260	270	280	290	300	310	320	330	340
psi	29	30	32	33	35	36	38	39	41	42	44	45	46	48	49
bar	2.0	2.1	2.2	2.3	2.4	2.5	2.6	2.7	2.8	2.9	3.0	3.1	3.2	3.3	3.4
kgf/cm^2	2.0	2.1	2.2	2.3	2.4	2.5	2.6	2.7	2.8	2.9	3.0	3.1	3.2	3.3	3.4

JVI0938X

Unit

The units that are shown in the vehicle information display can be changed:

- Mileage
- Tire pressures
- Temperature

Use the ▲▼ button ②, and the OK button ① to select and change the units of the vehicle information display.

Mileage:

The unit for the mileage that displays in the vehicle information display can be changed to:

- km, l/100km
- km, km/l
- miles, MPG

Use the ▲▼ button ② and the OK button ① to select and change the unit.

Tire pressures:

See "Tire Pressures" (P.2-25).

Temperature:

The temperature that displays in the vehicle information display can be changed from:

- °C (Celsius)
- °F (Fahrenheit)

Use the ▲▼ button ② to toggle choices.

Language

The language of the vehicle information display can be changed.

Use the ⬍ button ②, and the OK button ① to select and change the language of the vehicle information display.

Factory Reset

The settings in the vehicle information display can be reset back to the factory default. To reset the vehicle information display:

1. Select "Factory Reset" using the ⬍ button ② and press the OK button ①.
2. Select "YES" to return all settings back to default by pressing the OK button ①.

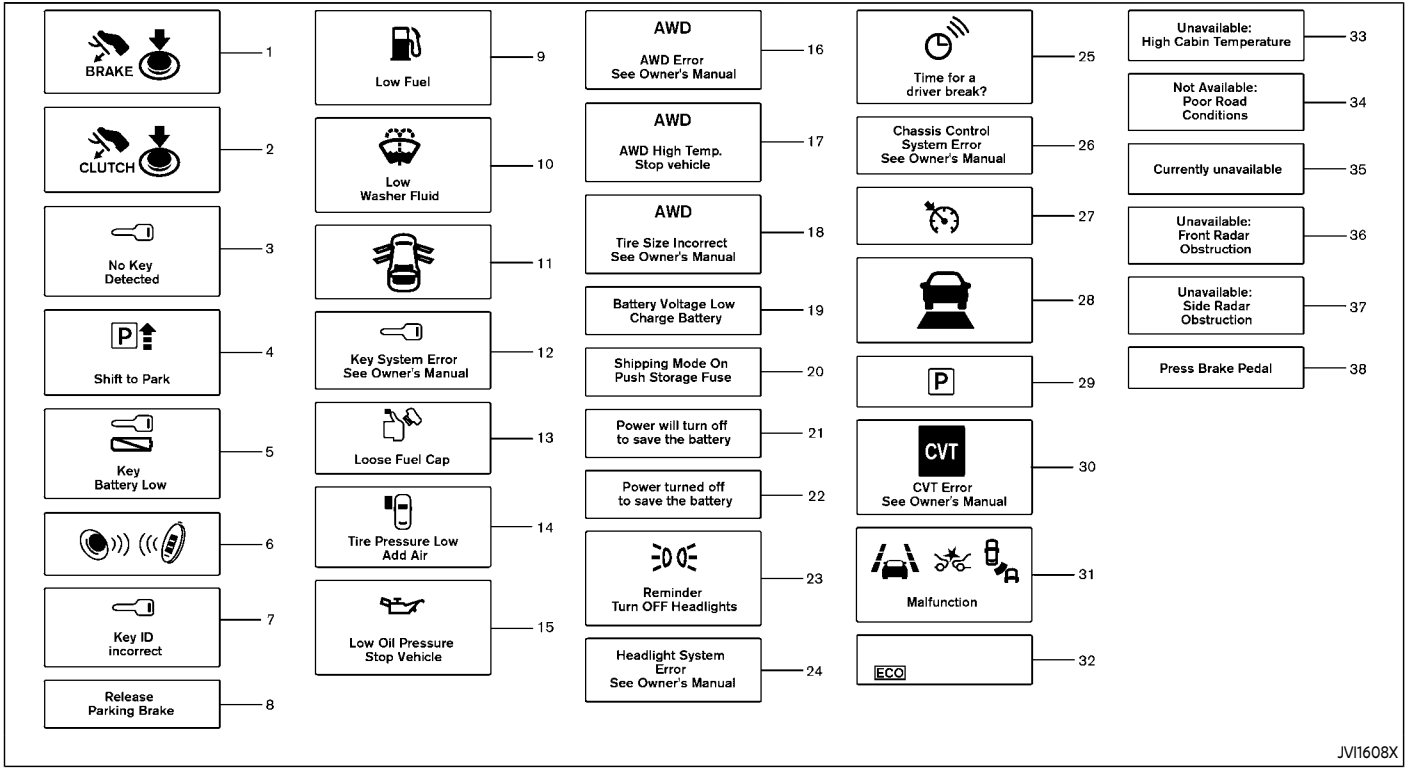
BRAKE
1
CLUTCH
2
No Key Detected
3
Shift to Park
4
Key Battery Low
5
6
Key ID incorrect
7
Release Parking Brake
8
Low Fuel
9
Low Washer Fluid
10
11
Key System Error See Owner's Manual
12
Loose Fuel Cap
13
Tire Pressure Low Add Air
14
Low Oil Pressure Stop Vehicle
15
AWD
AWD Error See Owner's Manual
16
AWD
AWD High Temp. Stop vehicle
17
AWD
Tire Size Incorrect See Owner's Manual
18
Battery Voltage Low Charge Battery
19
Shipping Mode On Push Storage Fuse
20
Power will turn off to save the battery
21
Power turned off to save the battery
22
Reminder Turn OFF Headlights
23
Headlight System Error See Owner's Manual
24
Time for a driver break?
25
Chassis Control System Error See Owner's Manual
26
27
28
P
29
CVT
CVT Error See Owner's Manual
30
Malfunction
31
ECO
32
Unavailable: High Cabin Temperature
33
Not Available: Poor Road Conditions
34
Currently unavailable
35
Unavailable: Front Radar Obstruction
36
Unavailable: Side Radar Obstruction
37
Press Brake Pedal
38
JVI1608X

VEHICLE INFORMATION DISPLAY WARNINGS AND INDICATORS

1. Engine start operation indicator (for Continuously Variable Transmission (CVT) models)

This indicator appears when the shift lever is in the P (Park) position.

This indicator means that the engine will start by pushing the ignition switch with the brake pedal depressed. You can start the engine directly in any position of the ignition switch.

2. Engine start operation indicator (for Manual Transmission (MT) models)

This indicator means that the engine will start by pushing the ignition switch with the clutch pedal depressed. You can start the engine directly in any position of the ignition switch.

You can also start the engine by pushing the ignition switch with the brake pedal depressed when the shift lever is in the N (Neutral) position.

3. No Key detected warning (if so equipped)

This warning appears when the door is closed with the Intelligent Key left outside the vehicle and the ignition switch in the ON position. Make sure that the Intelligent Key is inside the vehicle.

See "Intelligent Key system" (P.3-11) for more details.

4. Shift to Park warning (CVT models) (if so equipped)

This warning appears when the ignition switch is pushed to stop the engine with the shift lever in any position except the P (Park) position.

If this warning appears, move the shift lever to the P (Park) position or place the ignition switch in the ON position.

An inside warning chime will also sound. (See "Intelligent Key system" (P.3-11).)

5. Key battery low warning (if so equipped)

This warning appears when the Intelligent Key battery is running out of power.

If this indicator appears, replace the battery with a new one. See "Intelligent Key battery replacement" (P.8-23).

6. Engine start operation for Intelligent Key system indicator (if so equipped)

This indicator appears when the Intelligent Key battery is running out of power and when the Intelligent Key system and vehicle are not communicating normally.

If this indicator appears, touch the ignition switch with the Intelligent Key while depressing the brake pedal. (See "Intelligent Key battery discharge" (P.5-17).)

7. Key ID incorrect warning (if so equipped)

This warning appears when the ignition switch is placed from the LOCK position and the Intelligent Key cannot be recognized by the system. You cannot start the engine with an unregistered key. Use the registered Intelligent Key.

See "Intelligent Key system" (P.3-11).

8. Release Parking Brake warning

This warning appears when the vehicle speed is above 4 MPH (7 km/h) (models not equipped with electronic parking brake) or 2 MPH (4 km/h) (models equipped with electronic parking brake) and the parking brake is applied. Stop the vehicle and release the parking brake.

9. Low fuel level warning

This warning appears when the fuel level in the fuel tank is getting low. Refuel as soon as it is convenient, preferably before the fuel gauge reaches 0 (Empty). There will be a small reserve of fuel in the tank when the fuel gauge needle reaches 0 (Empty).

10. Low Washer Fluid warning (if so equipped)

This warning appears when the window washer fluid is at a low level. Add window washer fluid as necessary. For additional information, refer to "Window washer fluid" (P.8-10).

11. Door/liftgate open warning

This warning appears if any of the doors and/or the liftgate are open or not closed securely. The vehicle icon indicates which door or the liftgate is open on the display.

12. Key System Error: See Owner's Manual warning (if so equipped)

This warning appears if there is a malfunction in the Intelligent Key system.

If this warning appears while the engine is stopped, the engine cannot be started. If this warning appears while the engine is running, the vehicle can be driven. However, it is recommended that you visit a NISSAN dealer for repair as soon as possible.

13. Loose Fuel Cap warning

This warning appears when the fuel-filler cap is not tightened correctly after the vehicle has been refueled. For additional information, refer to "Fuel-filler cap" (P.3-27).

14. Tire Pressure Low — Add Air warning

This warning appears when the low tire pressure warning light in the meter illuminates and low tire pressure is detected. The warning appears each time the ignition switch is placed in the ON position as long as the low tire pressure warning light remains illuminated. If this warning appears, stop the vehicle and adjust the pressure to the recommended COLD tire pressure shown on the Tire and Loading Information label. (See "Low tire pressure warning light" (P.2-13) and "Tire Pressure Monitoring System (TPMS)" (P.5-5).)

15. Low Oil Pressure Stop Vehicle warning

This warning appears if low engine oil pressure is detected. If the warning appears during normal driving, pull off the road in a safe area and stop the engine immediately. It is recommended that you call a NISSAN dealer.

The low oil pressure warning is not designed to indicate a low oil level. Use the dipstick to check the oil level. (See "Engine oil" (P.8-6).)

CAUTION

Running the engine with the engine oil pressure warning displayed could cause serious damage to the engine.

16. AWD Error: See Owner's Manual warning (if so equipped)

This warning appears when the All-Wheel Drive (AWD) system is not functioning properly while the engine is running. Reduce vehicle speed and have the system checked. It is recommended that you visit a NISSAN dealer for this service. See "Intelligent 4x4" (P.5-100).

17. AWD High Temp. Stop vehicle warning (if so equipped)

This warning may appear while trying to free a stuck vehicle due to increased oil temperature. The driving mode may change to Two-Wheel Drive (2WD). If this warning is displayed, stop the vehicle with the engine idling, as soon as it is safe to do so. Then if the warning turns off, you can continue driving. See "Intelligent 4x4" (P.5-100).

18. Tire Size Incorrect: See Owner's Manual warning (if so equipped)

This warning may appear if there is a large difference between the diameters of the front and rear wheels and tires. Pull off the road in a safe area, with the engine idling. Check that all the tire sizes are the same, that the tire pressure is correct and that the tires are not excessively worn. See "Intelligent 4x4" (P.5-100).

19. Battery Voltage Low Charge Battery warning

This warning appears when the battery voltage is low and the battery needs to be charged.

20. Shipping Mode On Push Storage Fuse warning (if so equipped)

This warning may appear if the extended storage fuse switch is not pushed in (switched on). When this warning appears, push in (switch on) the extended storage fuse switch to turn off the warning. For more information, see "Extended storage fuse switch" (P.8-21).

21. Power will turn off to save the battery warning

This warning appears after the ignition switch is in the ON position for a certain period of time.

22. Power turned off to save the battery warning

This warning appears after the ignition switch is automatically turned OFF to save the battery.

23. Reminder: Turn OFF Headlights warning

This warning appears when the driver side door is opened with the headlight switch is left ON and the ignition switch is placed in the OFF or LOCK position. Place the headlight switch in OFF or AUTO (if so equipped) position. For additional information, see "Headlight and turn signal switch" (P.2-43).

24. Headlight System Error: See Owner's Manual warning (if so equipped)

This warning appears if the LED headlights are malfunctioning. Have the system checked. It is recommended that you visit a NISSAN dealer for this service.

25. Timer Alert — Time for a driver break? indicator

This indicator appears when the set "Time for a driver break?" indicator activates. You can set the time for up to 6 hours.

26. Chassis Control System Error: See Owner's Manual warning

This warning appears if the chassis control module detects an error in the chassis control system. Have the system checked. It is recommended that you visit a NISSAN dealer for this service. (See "Chassis control" (P.5-110).)

27. Cruise control indicator (if so equipped)

This indicator shows the cruise control system status. The status is shown by the color.

See "Cruise control" (P.5-60) for details.

28. Intelligent Cruise Control (ICC) indicator (if so equipped)

This indicator shows the Intelligent Cruise Control (ICC) system status. The status is shown by the color. (See "Intelligent Cruise Control (ICC)" (P.5-62).)

29. Continuously Variable Transmission (CVT) position indicator (CVT models)

This indicator shows the automatic shift position.

In the manual shift mode, when the transmission does not shift to the selected gear due to a transmission protection mode, the CVT position indicator will blink and a chime will sound.

See "Continuously Variable Transmission (CVT)" (P.5-20) for further details.

30. CVT Error: See Owner's Manual warning (CVT models)

This warning appears when there is a malfunction with the CVT system. If this warning comes on, have the system checked. It is recommended that you visit a NISSAN dealer for this service.

31. Malfunction warning (if so equipped)

This warning appears when the following systems malfunction.

- Lane Departure Warning (LDW)
- Intelligent Lane Intervention (I-LI)
- Blind Spot Warning (BSW)
- Rear Cross Traffic Alert (RCTA)
- Automatic Emergency Braking (AEB)
- Automatic Emergency Braking (AEB) with pedestrian detection

For more details, see "Lane Departure Warning (LDW)" (P.5-32), "Intelligent Lane Intervention (I-LI)" (P.5-37), "Blind Spot Warning (BSW)" (P.5-42), "Rear Cross Traffic Alert (RCTA)" (P.5-52), "Automatic Emergency Braking (AEB)" (P.5-82) or "Automatic Emergency Braking (AEB) with pedestrian detection system" (P.5-89).

32. ECO mode indicator

The ECO mode indicator appears when the ECO mode system is turned on.

(See "ECO mode system" (P.5-29).)

33. Unavailable: High Cabin Temperature warning (if so equipped)

This warning appears if the interior temperature of the vehicle has reached such a high temperature that the sensor for the Lane Departure Warning (LDW) or Intelligent Lane Intervention (I-LI) systems can no longer function reliably. Once the interior temperature has reached normal levels, the warning should disappear.

If the warning continues to display, have the system checked. It is recommended that you visit a NISSAN dealer for this service.

For additional information, refer to "Lane Departure Warning (LDW)" (P.5-32) or "Intelligent Lane Intervention (I-LI)" (P.5-37).

34. Not Available: Poor Road Conditions warning (if so equipped)

This message appears when the Intelligent Lane Intervention (I-LI) system becomes unavailable because the road is slippery. For additional information, refer to "Intelligent Lane Intervention (I-LI)" (P.5-37).

35. Currently unavailable warning (if so equipped)

This message appears when the Intelligent Lane Intervention (I-LI) system becomes unavailable because the VDC is turned off. For additional information, refer to "Intelligent Lane Intervention (I-LI)" (P.5-37).

36. Unavailable: Front Radar Obstruction warning (if so equipped)

If the sensor area of the front bumper is covered with dirt or obstructed, making it impossible to detect a vehicle ahead, the Automatic Emergency Braking (AEB) system, Automatic Emergency Braking (AEB) with pedestrian detection system or Intelligent Cruise Control (ICC) system is automatically turned off. The Automatic Emergency Braking (AEB) system warning light (orange) will illuminate and the warning message will appear in the vehicle information display. If the warning message appears, park the vehicle in a safe location and turn the engine off.

Check to see if the sensor area of the front bumper is blocked. If the sensor area of the front bumper is blocked, remove the blocking material. Restart the engine. If the warning light continues to illuminate or the warning message continues to appear, have the Automatic Emergency Braking (AEB) system, Automatic Emergency Braking (AEB) with pedestrian detection system or Intelligent Cruise Control (ICC) checked. It is recommended that you visit a NISSAN dealer for this service.

For more details, see "Automatic Emergency Braking (AEB)" (P.5-82), "Automatic Emergency Braking (AEB) with pedestrian detection system" (P.5-89) or "Intelligent Cruise Control (ICC)" (P.5-62).

37. Unavailable: Side Radar Obstruction warning (if so equipped)

This warning appears when the Blind Spot Warning (BSW)/Rear Cross Traffic Alert (RCTA) system becomes unavailable because a radar blockage is detected. (See "Blind Spot Warning (BSW)" (P.5-42) or "Rear Cross Traffic Alert (RCTA)" (P.5-52).)

38. Press Brake Pedal warning (for electronic parking brake equipped models)

This indicator appears in the following situations:

- The driver tries to release the electronic parking brake manually without depressing the brake pedal.
- The vehicle is stopped on a steep hill and there is a possibility of moving backward, even if the electronic parking brake is applied.

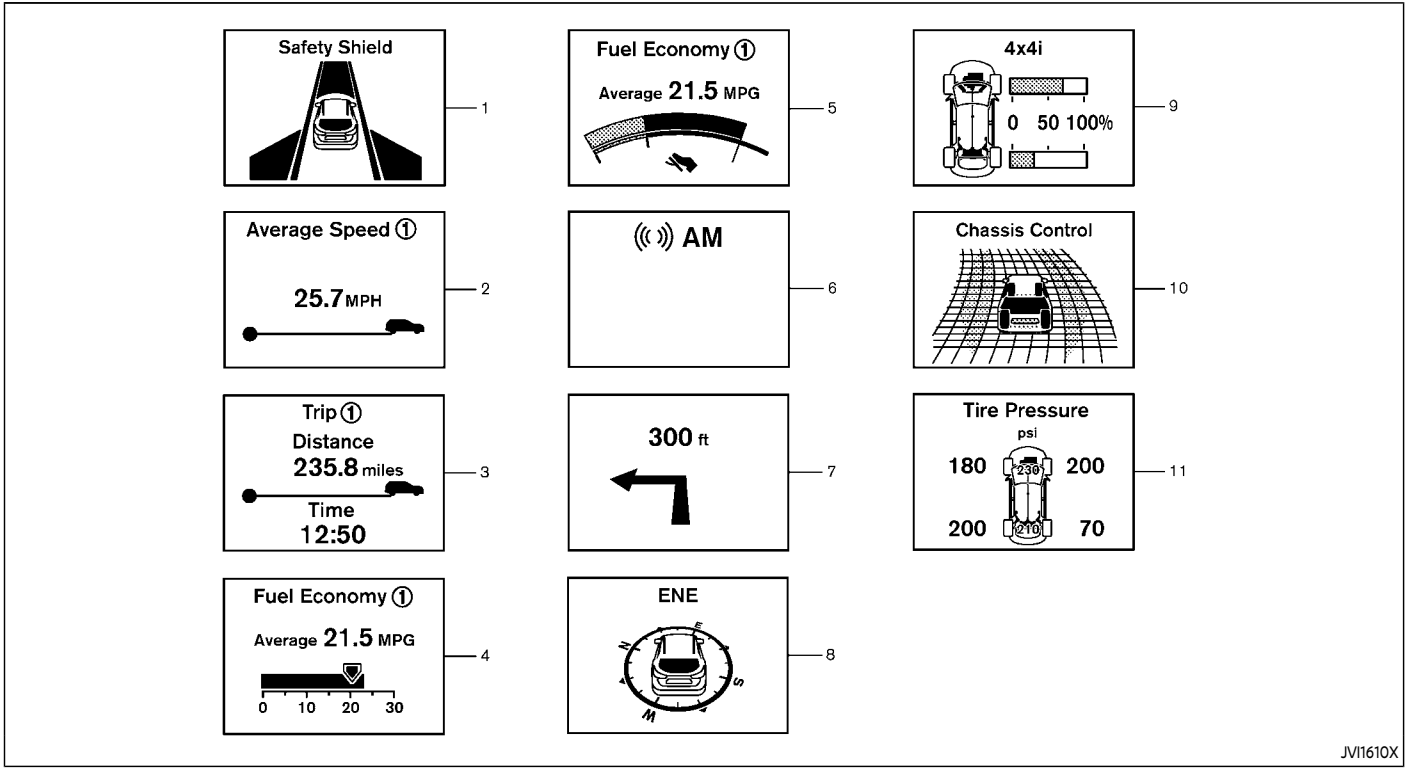
Safety Shield
1
Fuel Economy ①
Average 21.5 MPG
5
4x4i
0 50 100%
9
Average Speed ①
25.7 MPH
2
AM
6
Chassis Control
10
Trip ①
Distance
235.8 miles
Time
12:50
3
300 ft
7
Tire Pressure
psi
180
200
200
70
230
210
11
Fuel Economy ①
Average 21.5 MPG
0 10 20 30
4
ENE
8
JVI1610X

TRIP COMPUTER

1. Safety Shield (if so equipped)

The safety shield mode shows the operating condition for the following systems.

- Lane Departure Warning (LDW) (if so equipped)
- Intelligent Lane Intervention (I-LI) (if so equipped)
- Blind Spot Warning (BSW) (if so equipped)
- Automatic Emergency Braking (AEB) (if so equipped)
- Automatic Emergency Braking (AEB) with pedestrian detection system (if so equipped)

For more details, see "Lane Departure Warning (LDW)" (P.5-32), "Intelligent Lane Intervention (I-LI)" (P.5-37), "Blind Spot Warning (BSW)" (P.5-42), "Automatic Emergency Braking (AEB)" (P.5-82) or "Automatic Emergency Braking (AEB) with pedestrian detection system" (P.5-89).

2. Average speed 1 and 2 (MPH or km/h)

The average speed 1 mode shows the average vehicle speed since the last reset. The average speed 2 mode shows the average vehicle speed since the time the ignition switch was turned ON. The average speed 2 is automatically reset each time the ignition is placed in the OFF position.

Resetting is done by pushing the OK ① button. When the OK ① button is pushed, the following menu items are displayed.

- Cancel
  - Return to the previous screen without resetting.
- Average Speed
  - Reset the average speed.
- All
  - Reset all items of "Average Speed", "Elapsed time and trip odometer" and "Fuel economy."

Once the "Average speed 1" is displayed, you can use ▲▼ ② buttons to switch between the "Average speed 1" and "Average speed 2."

The display is updated every 30 seconds. The first 30 seconds after a reset, the display shows "——".

3. Elapsed time and trip odometer 1 and 2 (mile or km)

Elapsed time:

The elapsed time mode 1 shows the time since the last reset. The elapsed time 2 mode shows the time since the ignition switch was turned ON. (The trip odometer is also reset at the same time.)

Trip odometer:

The trip odometer 1 mode shows the total distance the vehicle has been driven since the last reset. The trip odometer 2 mode shows the total distance the vehicle has been driven since the time the ignition switch was placed in the ON position. (The elapsed time is also reset at the same time.)

The elapsed time and trip odometer 2 is automatically reset each time the ignition is placed in the OFF position.

Resetting is done by pushing the OK ① button. When the OK ① button is pushed, the following menu items are displayed.

- Cancel
  - Return to the previous screen without resetting.
- Distance
  - Reset the elapsed time and trip odometer.

- All
  - Reset all items of “Average Speed”, “Elapsed time and trip odometer” and “Fuel economy.”

Once the “Elapsed time and trip odometer 1” is displayed, you can use ⇕ ② buttons to switch between the “Elapsed time and trip odometer 1” and “Elapsed time and trip odometer 2.”

4-5. Fuel economy 1 and 2 (MPG, l (litre)/100 km or km/l(litre))

Current fuel consumption:

The current fuel consumption mode shows the current fuel consumption.

Average fuel consumption:

The average fuel consumption 1 mode shows the average fuel consumption since the last reset. The average fuel consumption 2 mode shows the average fuel consumption since the time the ignition switch was placed in the ON position. The average fuel consumption 2 is automatically reset each time the ignition is placed in the OFF position.

Resetting is done by pushing the OK ① button. When the OK ① button is pushed, the following menu items are displayed.

- Cancel
  - Return to the previous screen without resetting.
- Fuel Economy
  - Reset the fuel economy.
- All
  - Reset all items of “Average Speed”, “Elapsed time and trip odometer” and “Fuel economy”.

Once the “Fuel economy 1” is displayed, you can use ⇕ ② buttons to switch between the “Fuel economy 1” and “Fuel economy 2”.

The display is updated every 30 seconds. For about the first 1/3 mile (500 m) after a reset, the display shows “——”.

6. Audio

The audio mode shows the status of audio information.

7. Navigation (if so equipped)

When the route guidance is set in the navigation system, this item shows the navigation route information.

8. Compass (if so equipped)

This display indicates the heading direction of the vehicle.

9. Intelligent 4x4 torque distribution display (if so equipped)

When the Intelligent 4x4 torque distribution display is selected, you can view the distribution ratio of the transmission torque to the front and rear wheels during driving.

10. Chassis control

When Intelligent Trace Control, Intelligent Engine Brake (Continuously Variable Transmission (CVT) models) or Active Ride Control system is operated, it shows the operating condition. It also shows operating condition of Hill Start Assist. See “Intelligent Trace Control” (P.5-110), “Intelligent Engine Brake (Continuously Variable Transmission (CVT) models)” (P.5-111), “Active Ride Control” (P.5-112) or “Hill Start Assist system” (P.5-113)for more details.

11. Tire Pressures

The tire pressure mode shows the pressure of all four tires while the vehicle is driven.

When the Tire Pressure Low — Add Air warning appears, the display can be switched to the tire pressure mode by pushing the OK ① button to reveal additional details on the displayed warning.

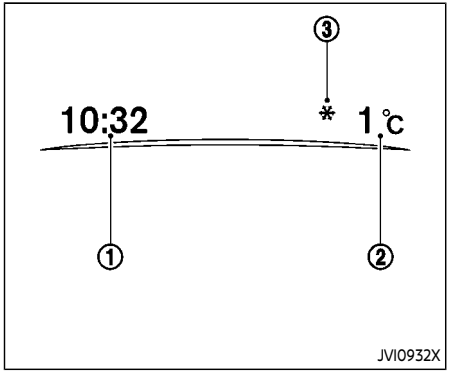

CLOCK AND OUTSIDE AIR TEMPERATURE

The clock ① and outside air temperature ② are displayed on the upper side of the vehicle information display.

Clock

For clock adjustment, see "Displaying settings menu" (P.4-5), "Audio main operation" (P.4-48) or "Audio main operation" (P.4-63) in this manual or the separate Navigation System Owner's Manual (if so equipped).

Outside air temperature (°F or °C)

The outside air temperature is displayed in °F or °C in the range of −40 to 140°F (−40 to 60°C).

The outside air temperature mode includes a low temperature warning feature. If the outside air temperature is below 37°F (3°C), the warning ③ is displayed (if so equipped).

The outside temperature sensor is located in front of the radiator. The sensor may be affected by road or engine heat, wind directions and other driving conditions. The display may differ from the actual outside temperature or the temperature displayed on various signs or billboards.

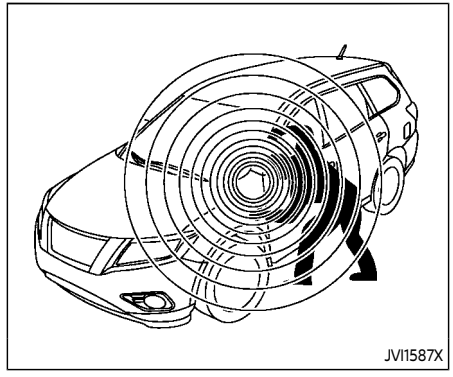

Your vehicle has two types of security systems, as follows:

- Vehicle security system
- NISSAN Vehicle Immobilizer System

The security condition will be shown by the security indicator light.

VEHICLE SECURITY SYSTEM

The vehicle security system provides visual and audio alarm signals if someone opens the doors, hood (if so equipped) and liftgate when the system is armed. It is not, however, a motion detection type system that activates when a vehicle is moved or when a vibration occurs.

The system helps deter vehicle theft but

cannot prevent it, nor can it prevent the theft of interior or exterior vehicle components in all situations. Always secure your vehicle even if parking for a brief period. Never leave your keys in the vehicle, and always lock it when unattended. Be aware of your surroundings, and park in secure, well-lit areas whenever possible.

Many devices offering additional protection, such as component locks, identification markers, and tracking systems, are available at auto supply stores and specialty shops. Your NISSAN dealer may also offer such equipment. Check with your insurance company to see if you may be eligible for discounts for various theft protection features.

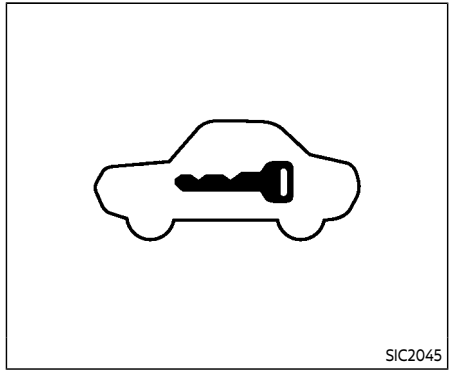

How to arm the vehicle security system

1. Close all windows. **The system can be armed even if the windows are open.**
2. Remove the keys from the vehicle.
3. Close all doors, hood (if so equipped) and liftgate. Lock all doors. The doors can be locked with the key fob (if so equipped), Intelligent Key (if so equipped), door handle request switch (if so equipped), power door lock switch, or mechanical key.
4. Confirm that the security indicator light stays on for about 30 seconds. The vehicle security system is now pre-armed. The vehicle security system will automatically shift into the armed phase. The security light begins to flash once every three seconds. If during the pre-armed phase one of the following occurs, the system will not arm:
   - Any door is unlocked with the key fob (if so equipped), the Intelligent Key (if so equipped), mechanical key, or door request switch.
   - Ignition switch is placed in the ON position.

Even when the driver and/or passengers are in the vehicle, the system will activate with all the doors, hood (if so equipped) and liftgate locked with the ignition switch placed in the LOCK position. When placing the ignition switch in the ON position, the system will be released.

Vehicle security system activation

The vehicle security system will give the following alarm:

- The headlights blink and the horn sounds intermittently.
- The alarm automatically turns off after approximately 50 seconds. However, the alarm reactivates if the vehicle is tampered with again.

The alarm is activated by:

- opening any doors, the hood (if so equipped) or liftgate without using the key or Intelligent Key (even if the door is unlocked by releasing the door inside lock knob).

How to stop an activated alarm

The alarm stops only by unlocking a door or the liftgate with the mechanical key, pressing the UNLOCK button on the key fob (if so equipped) or the Intelligent Key (if so equipped), or pushing the request switch (if so equipped) on the driver's or passenger's door in range of the door handle.

NISSAN VEHICLE IMMOBILIZER SYSTEM

The NISSAN Vehicle Immobilizer System will not allow the engine to start without the use of the registered key.

If the engine fails to start using the registered key, it may be due to interference caused by another registered key, an automated toll road device or automated payment device on the key ring. Restart the engine using the following procedures:

1. Leave the ignition switch in the ON position for approximately 5 seconds.
2. Place the ignition switch in the OFF or LOCK position and wait approximately 10 seconds.
3. Repeat step 1 and 2 again.
4. Restart the engine while holding the device (which may have caused the interference) separate from the registered key.

   If this procedure allows the engine to start, NISSAN recommends placing the registered key on a separate key ring to avoid interference from other devices.

Statement related to section 15 of FCC rules for NISSAN Vehicle Immobilizer System (CONT ASSY-BCM. ANT ASSY-IMMOBILISER)

FCC Notice:

For USA:

This device complies with Part 15 of the FCC Rules. Operation is subject to the following two conditions: (1) This device may not cause harmful interference, and (2) this device must accept any interference received, including interference that may cause undesired operation.

Note: Changes or modifications not expressly approved by the party responsible for compliance could void the user's authority to operate the equipment.

For Canada:

This device complies with Industry Canada licence-exempt RSS standard(s). Operation is subject to the following two conditions: (1) this device may not cause interference, and (2) this device must accept any interference, including interference that may cause undesired operation of the device.

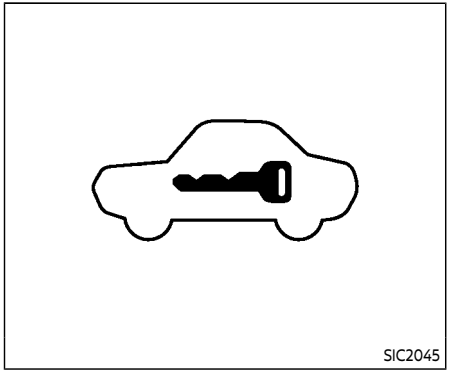

Security indicator light

The security indicator light blinks whenever the ignition switch is placed in the OFF or LOCK position.

This function indicates the NISSAN Vehicle Immobilizer System is operational.

If the NISSAN Vehicle Immobilizer System is malfunctioning, the light will remain on while the ignition switch is placed in the ON position.

If the light still remains on and/or the engine will not start, seek service for the NISSAN Vehicle Immobilizer System as soon as possible. Please bring all registered keys that you have. It is recommended you visit a NISSAN dealer for this service.

WARNING

In freezing temperatures the washer solution may freeze on the windshield and obscure your vision which may lead to an accident. Warm windshield with the defroster before you wash the windshield.

CAUTION

- **Do not operate the washer continuously for more than 30 seconds.**
- **Do not operate the washer if the reservoir tank is empty.**
- **Do not fill the window washer reservoir tank with washer fluid concentrates at full strength. Some methyl alcohol based washer fluid concentrates may permanently stain the grille if spilled while filling the window washer reservoir tank.**
- **Pre-mix washer fluid concentrates with water to the manufacturer's recommended levels before pouring the fluid into the window washer reservoir tank. Do**

not use the window washer reservoir tank to mix the washer fluid concentrate and water.

If the windshield wiper operation is interrupted by snow or ice, the wiper may stop moving to protect its motor. If this occurs, turn the wiper switch to the OFF position and remove the snow or ice that is on and around the wiper arms. In approximately 1 minute, turn the switch on again to operate the wiper.

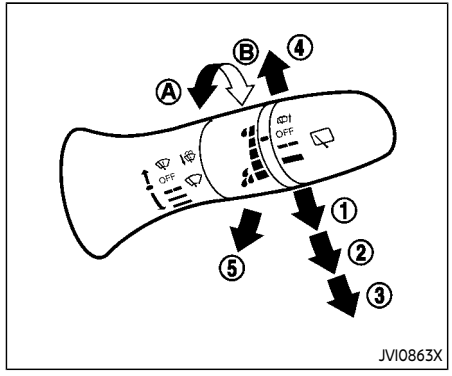

WINDSHIELD WIPER AND WASHER OPERATION

The windshield wiper and washer operates when the ignition switch is in the ON position.

Push the lever down to operate the wiper at the following speed:

① Intermittent — intermittent operation can be adjusted by turning the knob toward Ⓐ (Slower) or Ⓑ (Faster). Also, the intermittent operation speed varies in accordance with the vehicle speed. (For example, when the vehicle speed is high, the intermittent operation speed will be faster.)

② Low — continuous low speed operation

③ High — continuous high speed operation

Push the lever up ④ to have one sweep operation of the wiper.

Pull the lever toward you ⑤ to operate the washer. Then the wiper will also operate several times.

After a short delay, the drip wipe function will operate the wiper once more to clear remaining windshield-washer fluid from the windshield.

NOTE:

The Speed Dependent feature and Drip Wipe feature may be disabled. For additional information, refer to "Vehicle information display" (P.2-18) in this section.

REAR WINDOW WIPER AND WASHER SWITCH

WARNING

In freezing temperatures the washer solution may freeze on the rear window glass and obscure your vision. Warm the rear window with the defroster before you wash the rear window.

CAUTION

- **Do not operate the washer continuously for more than 30 seconds.**
- **Do not operate the washer if the reservoir tank is empty.**
- **Do not fill the window washer reservoir tank with washer fluid concentrates at full strength. Some methyl alcohol based washer fluid concentrates may permanently stain the grille if spilled while filling the window washer reservoir tank.**
- **Pre-mix washer fluid concentrates with water to the manufacturer's recommended levels before pouring the fluid into the window washer reservoir tank. Do not use the window washer reservoir tank to mix the washer fluid concentrate and water.**

If the rear window wiper operation is interrupted by snow or ice, the wiper may stop moving to protect its motor. If this occurs, turn the wiper switch to the OFF position and remove the snow or ice that is on and around the wiper arms. In approximately 1 minute, turn the switch on again to operate the wiper.

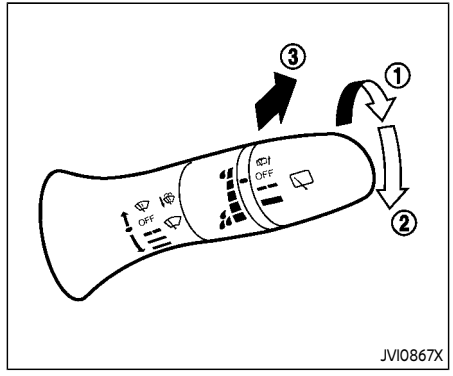

The rear window wiper and washer operate when the ignition switch is in the ON position.

Turn the switch clockwise from the OFF position to operate the wiper.

① Intermittent (INT) — intermittent operation (not adjustable)

② Low (ON) — continuous low speed operation

Push the switch forward ③ to operate the washer. Then the wiper will also operate several times.

Reverse Link feature:

When the windshield wiper switch is on, moving the shift lever to the R (Reverse) position will operate the rear window wiper.

NOTE:

The Reverse Link feature may be disabled. For additional information, refer to "Vehicle information display" (P.2-18).

Wiper drip wipe system:

The wiper will also operate once about 3 seconds after the washer and wiper are operated. This operation is to wipe washer fluid that has dripped on the windshield.

REAR WINDOW AND OUTSIDE MIRROR DEFROSTER SWITCH

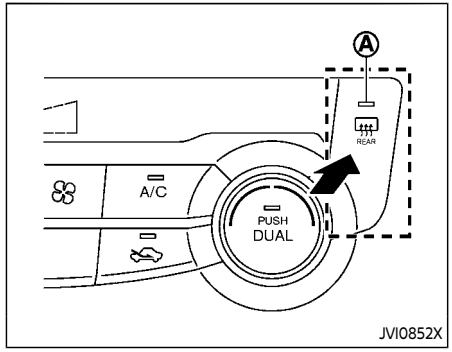

Type A

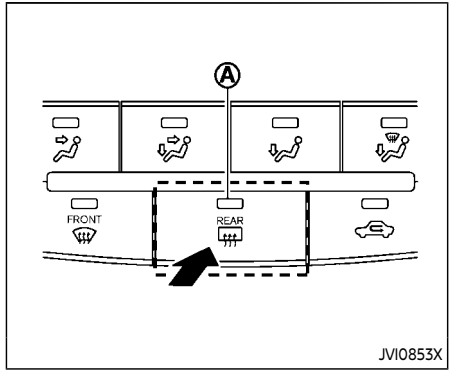

Type B

To defog/defrost the rear window glass and outside mirrors (if so equipped), start the engine and push the switch on. The indicator light Ⓐ will illuminate. Push the switch again to turn the defroster off.

It will automatically turn off in approximately 15 minutes.

CAUTION

When cleaning the inner side of the rear window, be careful not to scratch or damage the rear window defroster.

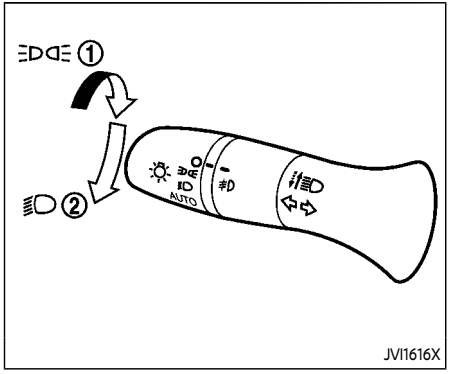

HEADLIGHT SWITCH

Lighting

① Rotate the switch to the position, and the front parking, tail, license plate, and instrument panel lights will come on.

② Rotate the switch to the position, and the headlights will come on and all the other lights remain on.

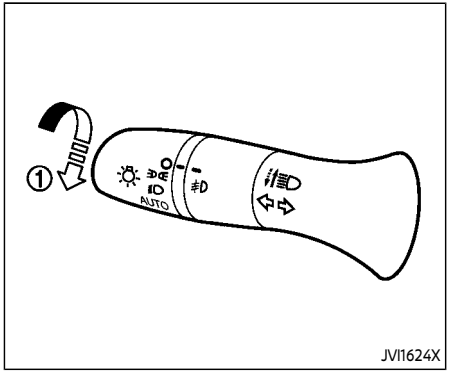

Intelligent Auto Headlight system (if so equipped)

The Intelligent Auto Headlight system allows the headlights to be set so they turn on and off automatically.

To set the Intelligent Auto Headlight system:

1. Make sure the headlight switch is in the AUTO position ①.
2. Place the ignition switch in the ON position.
3. The Intelligent Auto Headlight system automatically turns the headlights on and off.

To turn the Intelligent Auto Headlight system off, turn the switch to the OFF, or position.

The Intelligent Auto Headlight system can turn on the headlights automatically when it is dark and turn off the headlights when it is light.

The headlights will also be turned on automatically at twilight or in rainy weather (when the windshield wiper is operated continuously).

If the ignition switch is placed in the OFF position and one of the doors is opened and this condition is continued, the headlights remain on for 5 minutes.

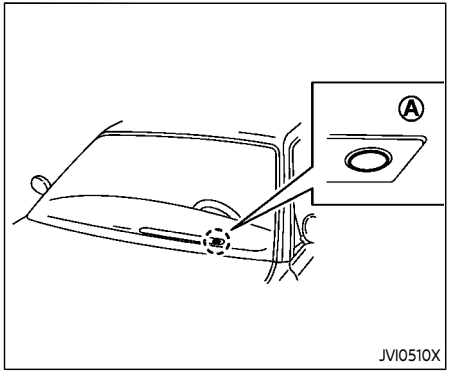

Be sure not to put anything on top of the photo sensor Ⓐ located on the top of the instrument panel. The photo sensor controls the Intelligent Auto Headlight; if it is covered, the photo sensor reacts as if it is dark and the headlights will illuminate.

Automatic headlights off delay (if so equipped):

You can keep the headlights on for up to 180 seconds after you place the ignition switch in the OFF and open any door then close all the doors. You can adjust the period of the automatic headlights off delay from 0 seconds (OFF) to 180 seconds. The factory default setting is 45 seconds.

For automatic headlights off delay setting, see "Vehicle Settings" (P.2-22).

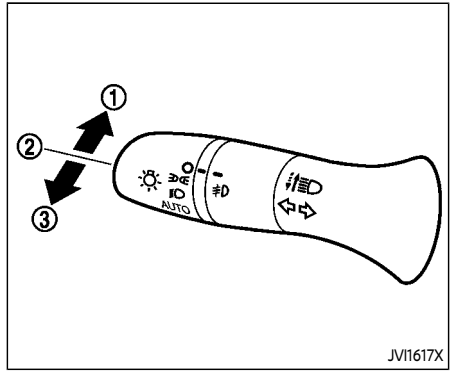

Headlight beam select

① To select the high beam function, push the lever forward. The high beam lights come on and the light illuminates.

② Pull the lever back to select the low beam.

③ Pulling and releasing the lever flashes the headlight high beams on and off.

High beam assist (if so equipped)

The high beam assist system will operate when the vehicle is driven at speeds of approximately 19 MPH (30 km/h) and above. If an oncoming vehicle or leading vehicle appears in front of your vehicle when the headlight high beam is on, the headlight will be switched to the low beam automatically.

Precautions on high beam assist:

WARNING

- **The high beam assist system is a convenience but it is not a substitute for safe driving operation. The driver should remain alert at all times, ensure safe driving practices and switch the high beams and low beam manually when necessary.**
- **The high beam or low beam may not switch automatically under the following conditions. Switch the high beam and low beam manually.**
  - **During bad weather (rain, fog, snow, wind, etc.).**
  - **When a light source similar to a headlight or tail light is in the vicinity of the vehicle.**
  - **When the headlights of the oncoming vehicle or the leading vehicle are turned off, when the color of the light is affected due to foreign materials on the lights, or when the light beam is out of position.**
  - **When there is a sudden, continuous change in brightness.**
  - **When driving on a road that passes over rolling hills, or a road that has level differences.**
  - **When driving on a road with many curves.**
  - **When a sign or mirror-like surface is reflecting intense light towards the front of the vehicle.**
  - **When the container, etc. being towed by a leading vehicle is reflecting intense light.**
  - **When a headlight on your vehicle is damaged or dirty.**
  - **When the vehicle is leaning at an angle due to a punctured tire, being towed, etc.**
- **The timing of switching the low beam and high beam may change under the following situations.**
  - **The brightness of the headlights of the oncoming vehicle or leading vehicle.**
  - **The movement and direction of the oncoming vehicle and the leading vehicle.**
  - **When only one light on the oncoming vehicle or the leading vehicle is illuminated.**
  - **When the oncoming vehicle or the leading vehicle is a two-wheeled vehicle.**
  - **Road conditions (incline, curve, the road surface, etc.).**
  - **The number of passengers and the amount of cargo.**

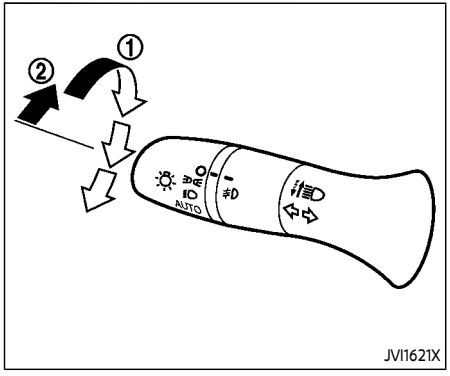

High beam assist operations:

To activate the high beam assist system, turn the headlight switch to the AUTO position ① and push the lever forward ② (high beam position). The high beam assist indicator light in the meter will illuminate while the headlights are turned on.

If the high beam assist indicator light does not illuminate in the above condition, it may indicate that the system is not functioning properly. It is recommended you have the system checked by a NISSAN dealer.

When the vehicle speed lowers to less than approximately 13 MPH (20 km/h), the headlight remains the low beam.

To turn off the high beam assist system, turn the headlight switch to the position or select the low beam position by placing the lever in the neutral position.

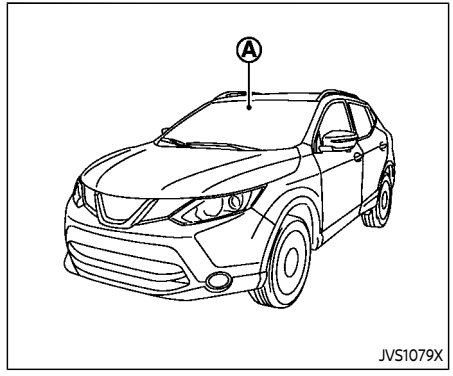

Ambient image sensor maintenance:

The ambient image sensor Ⓐ for the high beam assist system is located in front of the inside mirror. To keep the proper operation of the high beam assist system and prevent a system malfunction, be sure to observe the following:

- Always keep the windshield clean.
- Do not attach a sticker (including transparent material) or install an accessory near the ambient image sensor.
- Do not strike or damage the areas around the ambient image sensor. Do not touch the sensor lens that is located on the ambient image sensor.

If the ambient image sensor is damaged due to an accident, it is recommended you contact a NISSAN dealer.

Battery saver system

- When the headlight switch is in the ⊜ or ⊜ position while the ignition switch is in the ON position, the lights will automatically turn off within a period of time after the ignition switch has been placed in the OFF position.
- When the headlight switch remains in the ⊜ or ⊜ position after the lights automatically turn off, the lights will turn on when the ignition switch is placed in the ON position.

CAUTION

- **When you turn on the headlight switch again after the lights automatically turn off, the lights will not turn off automatically. Be sure to turn the light switch to the OFF position when you leave the vehicle for extended periods of time, otherwise the battery will be discharged.**
- **Never leave the light switch on when the engine is not running for extended periods of time even if the headlights turn off automatically.**

Daytime Running Light (DRL) system

The LED portion of the headlights automatically illuminate at 100% intensity when the engine is started and the parking brake released. The LED Daytime Running Light (DRL) operate with the headlight switch in the OFF position or in the ⊜ position. When you turn the headlight switch to the ⊜ position for full illumination, the LED lights switch from LED DRL to the park function.

If the parking brake is applied before the engine is started, the LED DRL do not illuminate. The LED DRL illuminate when the parking brake is released. The LED DRL will remain on until the ignition switch is placed in the OFF position.

It is necessary at dusk to turn the headlight switch ON for interior controls and switches to illuminate, as those remain OFF while the switch is in the OFF position.

WARNING

When the LED DRL system is active, tail lights on your vehicle are not on. It is necessary at dusk to turn on your headlights. Failure to do so could cause an accident injuring yourself and others.

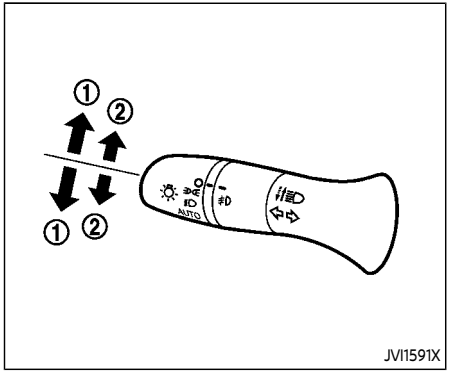

TURN SIGNAL SWITCH

① Turn signal

Move the lever up or down to signal the turning direction. When the turn is completed, the turn signals cancel automatically.

② Lane change signal

Move the lever up or down until the turn signal begins to flash, but the lever does not latch, to signal a lane change. Hold the lever until the lane change is completed.

Move the lever up or down until the turn signal begins to flash, but the lever does not latch, and release the lever. The turn signal will automatically flash three times.

Choose the appropriate method to signal a lane change based on road and traffic conditions.

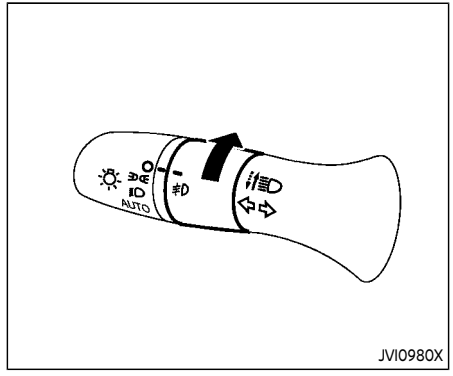

FOG LIGHT SWITCH (if so equipped)

To turn the fog lights on, turn the headlight switch to the position, then turn the fog light switch to the position.

To turn the fog lights on with the headlight switch in the AUTO position, the headlights must be on, then turn the fog light switch to the position.

To turn them off, turn the fog light switch to the OFF position.

The headlights must be on for the fog lights to operate. The fog lights automatically turn off when the high beam headlights are selected.

HORN

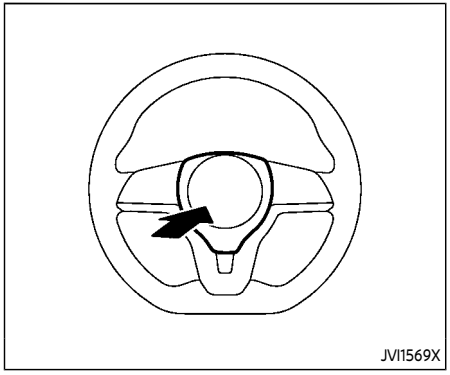

To sound the horn, push the center pad area of the steering wheel.

WARNING

Do not disassemble the horn. Doing so could affect proper operation of the supplemental front air bag system. Tampering with the supplemental front air bag system may result in serious personal injury.

HEATED STEERING WHEEL (if so equipped)

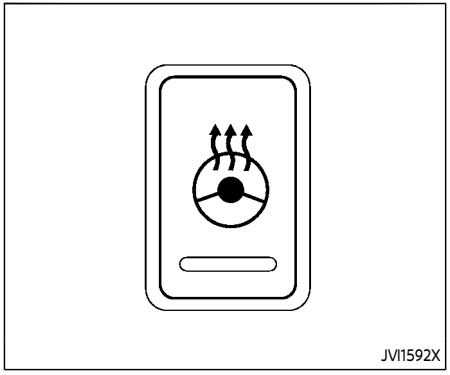

The heated steering wheel system is designed to operate only when the surface temperature of the steering wheel is below 68°F (20°C).

Push the heated steering wheel switch to warm the steering wheel after the engine starts. The indicator light on the switch will illuminate.

If the surface temperature of the steering wheel is below 68°F (20°C), the system will heat the steering wheel and cycle off and on to maintain a temperature above 68°F (20°C). The indicator light will remain on as long as the system is on.

Push the switch again to turn the heated steering wheel system off manually. The indicator light will turn off.

NOTE:

If the surface temperature of the steering wheel is above 68°F (20°C) when the switch is turned on, the system will not heat the steering wheel. This is not a malfunction.

HEATED SEATS (if so equipped)

WARNING

Do not use or allow occupants to use the seat heater if you or the occupants cannot monitor elevated seat temperatures or have an inability to feel pain in body parts that contact the seat. Use of the seat heater by such people could result in serious injury.

CAUTION

- **The battery could run down if the seat heater is operated while the engine is not running.**
- **Do not use the seat heater for extended periods or when no one is using the seat.**
- **Do not put anything on the seat which insulates heat, such as a blanket, cushion, seat cover, etc. Otherwise, the seat may become overheated.**
- **Do not place anything hard or heavy on the seat or pierce it with a pin or similar object. This may result in damage to the heater.**
- **Any liquid spilled on the heated seat should be removed immediately with a dry cloth.**
- **When cleaning the seat, never use gasoline, thinner, or any similar materials.**
- **If any malfunctions are found or the heated seat does not operate, turn the switch off and have the system checked. It is recommended you visit a NISSAN dealer for this service.**

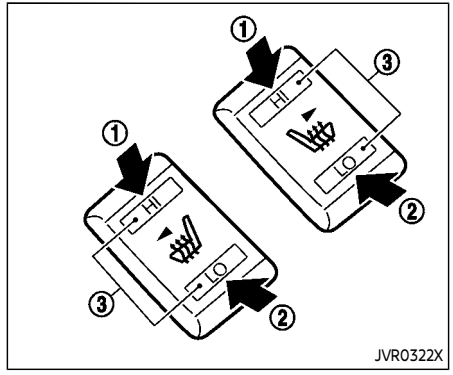

The seats are warmed by built-in heaters. The switches located on the center console can be operated independently of each other.

1. Start the engine.
2. Select heat range.

   ① For high-speed heating, push the HI (High) side of the switch.

   ② For low-speed heating, push the LO (Low) side of the switch.

   The indicator light on the switch ③ will illuminate when the heater is on.
3. To turn off the heater, return the switch to the level position. Make sure the indicator light goes off.

The heater is controlled by a thermostat, automatically turning the heater on and off. The indicator light will remain on as long as the switch is on.

When the vehicle's interior is warmed, or before you leave the vehicle, be sure to turn off the switch.

INTELLIGENT LANE INTERVENTION (I-LI) SWITCH (if so equipped)

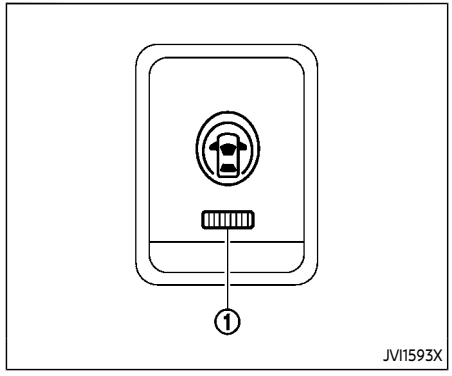

The Intelligent Lane Intervention (I-LI) switch is used to turn on and off the I-LI system.

The I-LI system must be turned on with the I-LI switch every time the ignition is placed in the ON position.

When the I-LI switch is turned off, the indicator ① on the switch is off.

The I-LI system warns the driver with a warning indicator and a chime, and helps assist the driver to return the vehicle to the center of the traveling lane by applying the brakes to the left or right wheels individually (for a short period of time). For additional information, see "Intelligent Lane Intervention (I-LI)" (P.5-37).

BLIND SPOT WARNING (BSW) SWITCH (if so equipped)

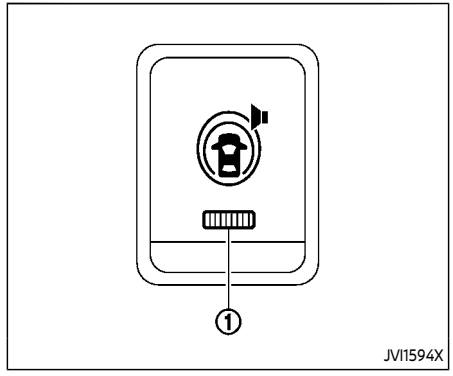

The Blind Spot Warning (BSW) switch is used to temporarily turn on and off the BSW system that is activated using the settings menu of the vehicle information display.

When the BSW switch is turned off, the indicator ① on the switch is off. The indicator will also be off if the BSW system is deactivated using the vehicle information display.

The BSW system helps alert the driver of other vehicles in adjacent lanes when changing lanes. For additional information, see "Blind Spot Warning (BSW)" (P.5-42).

VEHICLE DYNAMIC CONTROL (VDC) OFF SWITCH

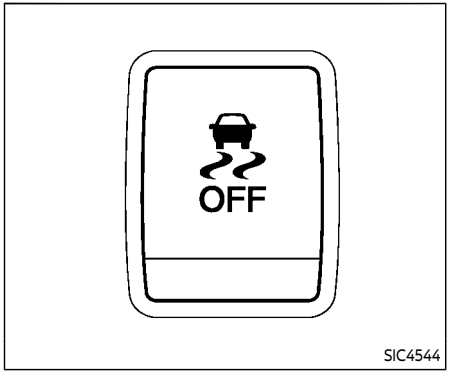

The vehicle should be driven with the Vehicle Dynamic Control (VDC) system on for most driving conditions.

If the vehicle is stuck in mud or snow, the VDC system reduces the engine output to reduce wheel spin. The engine speed will be reduced even if the accelerator is depressed to the floor. If maximum engine power is needed to free a stuck vehicle, turn the VDC system off.

To turn off the VDC system, push the VDC OFF switch. The indicator light will illuminate.

Push the VDC OFF switch again or restart the engine to turn on the system. (See "Vehicle Dynamic Control (VDC) system" (P.5-108).)

INTELLIGENT 4X4 LOCK SWITCH (if so equipped)

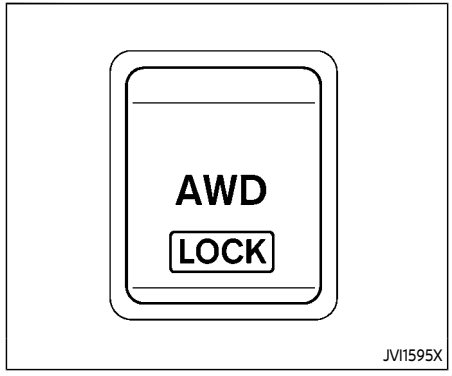

The Intelligent 4x4 LOCK switch is located on the instrument panel. The AWD LOCK indicator light will illuminate when the switch is turned on. For additional information, refer to "Intelligent 4x4" (P.5-100).

Each time you push the switch, the AWD mode will switch: AUTO → LOCK → AUTO.

ECO MODE SWITCH

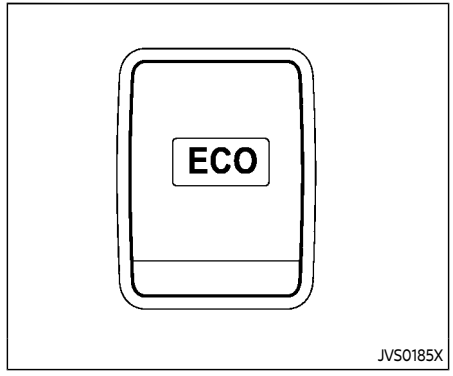

The ECO mode system helps to enhance the fuel economy by controlling the engine and CVT operation (for CVT models) automatically to avoid rapid acceleration.

To turn on the ECO mode system, push the ECO switch. The ECO mode indicator appears on the meter.

To turn off the ECO mode, push the ECO switch again. The ECO mode indicator will turn off.

- The ECO mode system cannot be turned off while the accelerator pedal is depressed even if the ECO switch is pushed to OFF. Release the accelerator pedal to turn off the ECO mode

system.

- The ECO mode system will turn off automatically if a malfunction occurs in the system.
- Turn off the ECO mode system when acceleration is required such as when:
  - driving with a heavy load of passengers or cargo in the vehicle
  - driving on a steep uphill slope

POWER OUTLET

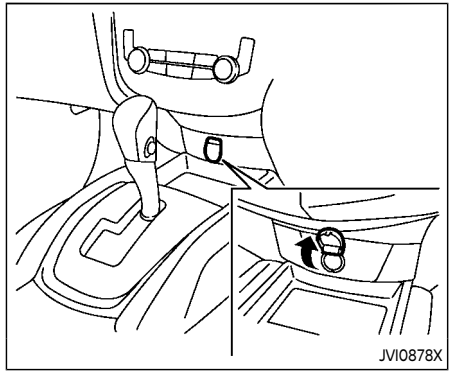

The power outlet is located in the instrument panel.

CAUTION

- **The outlet and plug may be hot during or immediately after use.**
- **Do not use with accessories that exceed a 12 volt, 120W (10A) power draw. Do not use double adapters or more than one electrical accessory.**
- **Use power outlet with the engine running to avoid discharging the vehicle battery.**
- **Avoid using power outlet when the air conditioner, headlights or rear window defroster is on.**
- **This power outlet is not designed for use with a cigarette lighter unit.**
- **Push the plug in as far as it will go. If good contact is not made, the plug may overheat or the internal temperature fuse may open.**
- **Before inserting or disconnecting a plug, be sure the electrical accessory being used is turned OFF.**
- **When not in use, be sure to close the cap. Do not allow water or any liquid to contact the outlet.**

CUP HOLDERS

CAUTION

- **Avoid abrupt starting and braking when the cup holder is being used to prevent spilling the drink. If the liquid is hot, it can scald you or your passenger.**
- **Use only soft cups in the cup holder. Hard objects can injure you in an accident.**

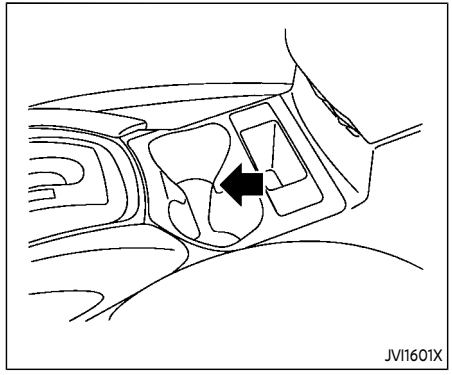

Center console

Front

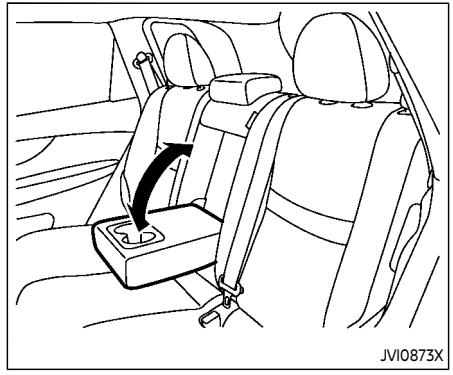

Rear seat (if so equipped)

The rear cup holders are located in the rear fold-down armrest.

SOFT BOTTLE HOLDERS

CAUTION

- **Do not use bottle holder for any other objects that could be thrown about in the vehicle and possibly injure people during sudden braking or an accident.**
- **Do not use bottle holder for open liquid containers.**

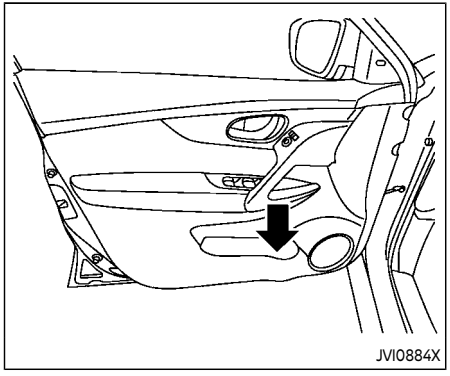

Door (front and rear)

CARGO AREA (if so equipped)

You can use the cargo area in diverse ways using the flexible luggage boards.

WARNING

Do not put objects heavier than 110 lbs (50 kg) on the load floor.

CAUTION

- **Do not push the front edge of the luggage board forcibly. Doing so may cause the luggage board to be tilted, resulting in personal injury.**
- **Do not handle the luggage board forcibly as this may deform it.**
- **While in the upper position, do not recline the seatbacks.**
- **Do not place cargo higher than the seatbacks. In a sudden stop or collision, unsecured cargo could cause personal injury.**

NOTE:

The diversity of the cargo area may be restricted depending on the equipment of each vehicle.

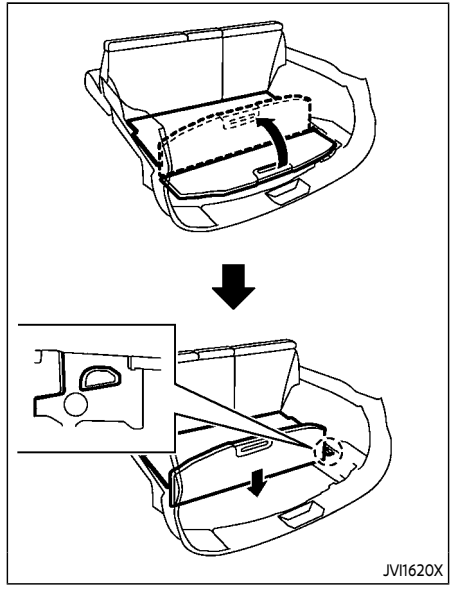

1. Pull the outer board upward to 90°.
2. Push down the board until it stops.

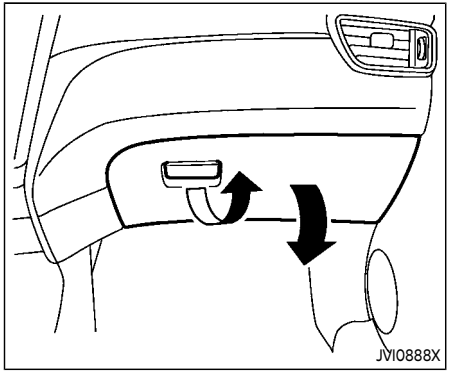

GLOVE BOX

WARNING

Keep glove box lid closed while driving to help prevent injury in an accident or a sudden stop.

To open the glove box, pull the handle.

To close, push the lid in until the lock latches. The glove box light illuminates when the headlight switch is turned on.

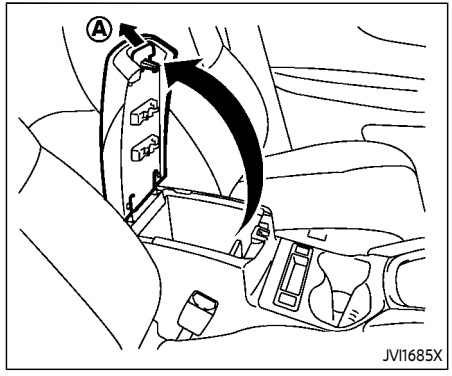

CONSOLE BOX

To open the console box lid, push up the knob Ⓐ and pull up the lid.

To close, push the lid down until the lock latches.

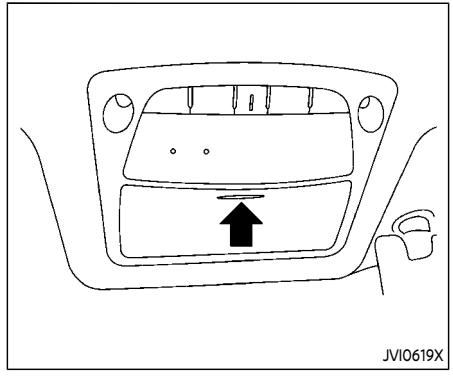

SUNGLASSES HOLDER

WARNING

Keep the sunglasses holder closed while driving to avoid obstructing the driver's view and to help prevent an accident.

CAUTION

- **Do not use for anything other than sunglasses.**

- **Do not leave sunglasses in the sunglasses holder while parking in direct sunlight. The heat may damage the sunglasses.**

To open the sunglasses holder, push and release. Only store one pair of sunglasses in the holder.

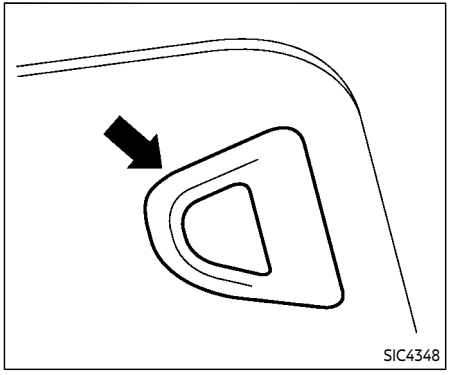

CARD HOLDER (driver's side)

Slide a card in the card holder.

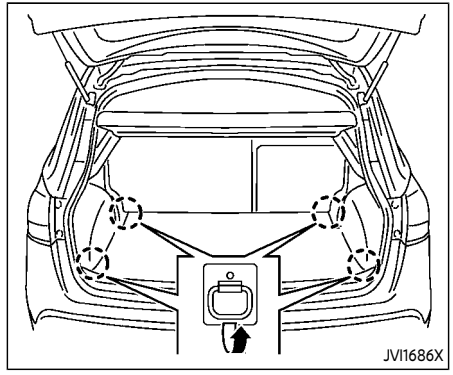

Cargo area

LUGGAGE HOOKS

To use the hook, pull it up as illustrated.

WARNING

- **Always make sure that the cargo is properly secured. Use the suitable ropes and hooks.**
- **Unsecured cargo can become dangerous in an accident or sudden stop.**
- **Do not apply a total load of more than 22 lb (10 kg) to a single hook.**

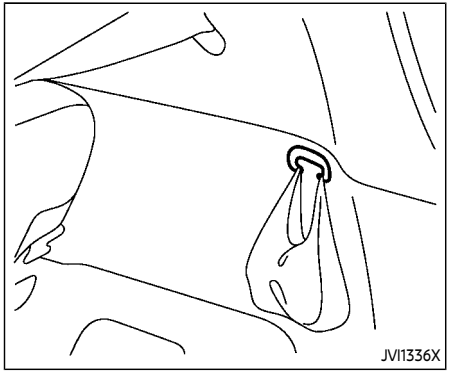

Cargo area (hooks for shopping bags, etc.)

WARNING

Do not apply a total load of more than 7 lb (3 kg) to the hook.

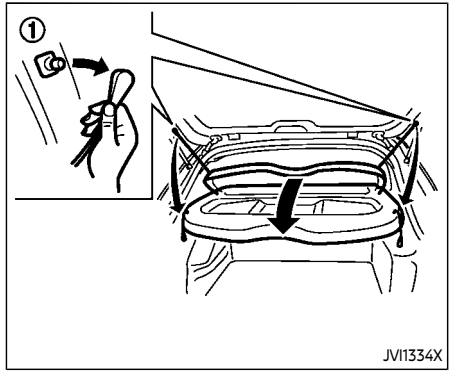

PARCEL SHELF

WARNING

- **Never put anything on the parcel shelf, no matter how small. Any object on it could cause an injury in case of an accident or if the brakes are applied suddenly.**
- **Do not leave the parcel shelf in position when it is disengaged from the grooves.**
- **Properly secure all cargo to help prevent it from sliding or shifting. Do not place cargo higher than the seatbacks. In a sudden stop or collision, unsecured cargo could cause personal injury**
- **The child restraint top tether strap may be damaged by contact with the parcel shelf or items in the cargo area. Remove the parcel shelf from the vehicle or store it in its storage space. Also, secure any lose items in the cargo area. Your child could be seriously injured or killed in a collision if the top tether strap is damaged.**

Removal

1. Open the liftgate. (See “Liftgate” (P.3-25).)
2. Detach both of the ropes (left and right) ① from the inside of the liftgate.
3. Detach the parcel shelf by simply pulling it rearwards through the liftgate opening.

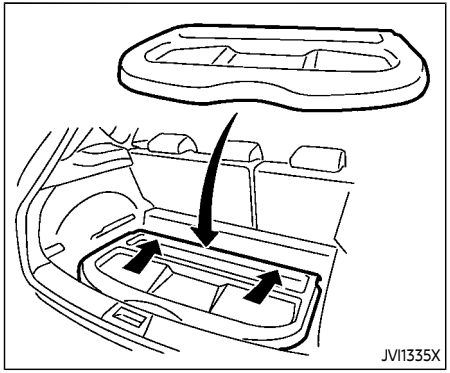

CAUTION

Make sure the parcel shelf is carefully stored when not in use in order to prevent any damage.

Installation

1. Open the liftgate.
2. Insert the parcel shelf by pushing it forwards as far as possible through the liftgate opening.
3. Attach the corresponding ropes to each side ① of the liftgate.
4. Close the liftgate.

ROOF RACK (if so equipped)

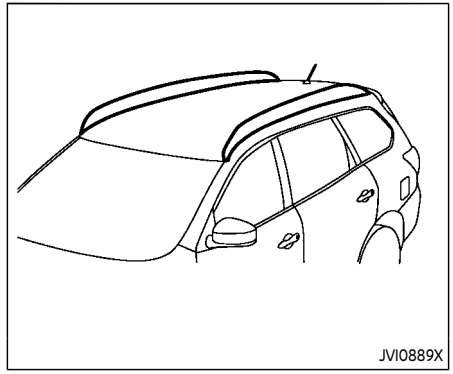

Do not apply any load directly to the roof side rails. Cross bars must be installed before applying load/cargo/luggage to the roof of the vehicle. Genuine NISSAN accessory cross bars are available through a NISSAN dealer. It is recommended that you visit a NISSAN dealer for additional information.

The service load capacity for the roof side rails is 150 lb (68 kg), however do not exceed the accessory cross bars load capacity.

Be careful that your vehicle does not exceed the Gross Vehicle Weight Rating (GVWR) or its Gross Axle Weight Rating (GAWR front and rear). The GVWR and

GAWR are located on the F.M.V.S.S. or C.V.M.S.S. certification label (located on the driver's door pillar). For additional information regarding GVWR and GAWR, refer to "Vehicle loading information" (P.10-11).

WARNING

- **Always install the cross bars onto the roof side rails before loading cargo of any kind. Loading cargo directly onto the roof side rails or the vehicle's roof may cause vehicle damage.**
- **Drive extra carefully when the vehicle is loaded at or near the cargo carrying capacity, especially if the significant portion of that load is carried on the cross bars.**
- **Heavy loading of the cross bars has the potential to affect the vehicle stability and handling during sudden or unusual handling maneuvers.**
- **Roof rack cross bars should be evenly distributed.**
- **Do not exceed maximum roof rack cross bars load.**
- **Properly secure all cargo with ropes or straps to help prevent it from sliding or shifting. In a sudden stop or collision, unsecured cargo could cause personal injury.**

WINDOWS

POWER WINDOWS

WARNING

- **Make sure that all passengers have their hands, etc. inside the vehicle while it is in motion and before closing the windows. Use the window lock switch to prevent unexpected use of the power windows.**
- **To help avoid risk of injury or death through unintended operation of the vehicle and or its systems, including entrapment in windows or inadvertent door lock activation, do not leave children, people who require the assistance of others or pets unattended in your vehicle. Additionally, the temperature inside a closed vehicle on a warm day can quickly become high enough to cause a significant risk of injury or death to people and pets.**

The power windows operate when the ignition switch is in the ON position, or for about 45 seconds after the ignition switch is placed in the OFF position. If the driver's or front passenger's door is opened during this period of about 45

seconds, power to the windows is canceled.

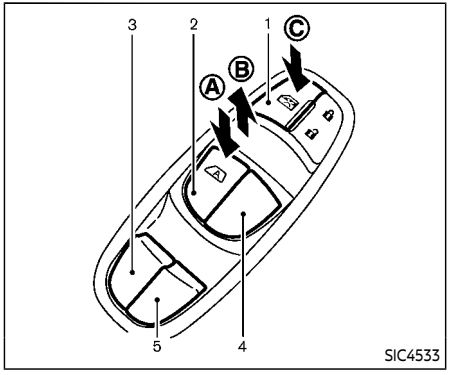

1. Window lock button
2. Driver side window
3. Rear left passenger side window
4. Front passenger side window
5. Rear right passenger side window

Main power window switch (driver's side)

To open or close the window, push down Ⓐ or pull up Ⓑ the switch and hold it. The main switch (driver side switches) will open or close all the windows.

Locking passengers' windows

When the lock button Ⓒ is pushed in, only the driver side window can be opened or closed. Push it in again to cancel.

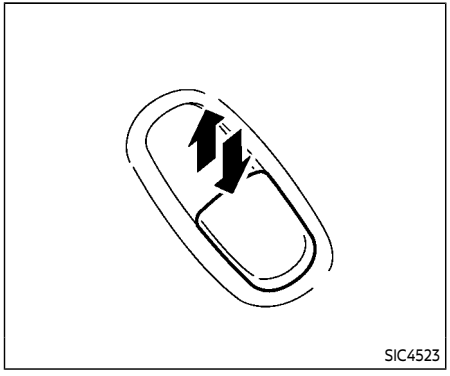

Passenger side power window switch

The passenger side switch will open or close only the corresponding window. To open or close the window, push down or pull up the switch and hold it.

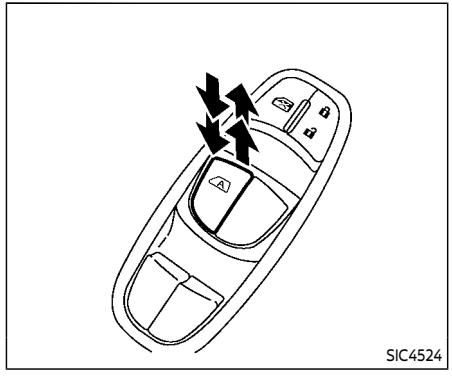

Automatic operation

The automatic operation is available for the switch that has an A mark on its surface.

To fully open or close the window, completely push down or pull up the switch and release it; the switch need not be held. The window will automatically open or close all the way. To stop the window, just push or lift the switch in the opposite direction.

A light push or pull on the switch will cause the window to open or close until the switch is released.

Auto-reverse function

WARNING

There are some small distances immediately before the closed position which cannot be detected. Make sure that all passengers have their hands, etc., inside the vehicle before closing the window.

If the control unit detects something caught in the window as it is closing, the window will be immediately lowered.

The auto reverse function can be activated when the window is closed by automatic operation when the ignition switch is in the ON position or for 45 seconds after the ignition switch is placed in the OFF position.

Depending on the environment or driving conditions, the auto reverse function may be activated if an impact or load similar to something being caught in the window occurs.

If the windows do not close automatically

If the power window automatic function (closing only) does not operate properly, perform the following procedure to initialize the power window system.

1. Start the engine.
2. Close the door.
3. After starting the engine, open the window completely by operating the power window switch.
4. Pull the power window switch and hold it to close the window, and then hold the switch more than 3 seconds after the window is closed completely.
5. Release the power window switch. Operate the window by the automatic function to confirm the initialization is complete.

If the power window automatic function does not operate properly after performing the procedure above, it is recommended you have your vehicle checked by a NISSAN dealer.

WARNING

- **In an accident you could be thrown from the vehicle through an open moonroof. Always use seat belts and child restraints.**
- **Do not allow anyone to stand up or extend any portion of their body out of the moonroof opening while the vehicle is in motion or while the moonroof is closing.**

CAUTION

- **Remove water drops, snow, ice or sand from the moonroof before opening.**
- **Do not place any heavy object on the moonroof or surrounding area.**

POWER MOONROOF

The moonroof only operates when the ignition switch is in the ON position.

The moonroof is operational for about 45 seconds, even if the ignition switch is pushed to the OFF position. If the driver's door or the passenger's door is opened during this period of about 45 seconds, power to the moonroof is canceled.

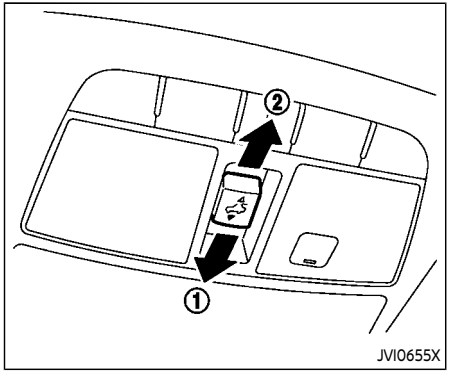

Sunshade

The sunshade will open automatically when the moonroof is opened. However, it must be closed manually.

Tilting the moonroof

To tilt up, first close the moonroof, then push the switch to the tilt up position ① and release it; it need not be held. To tilt down the moonroof, push the switch to the tilt down position ②.

Sliding the moonroof

To fully open or close the moonroof, push the switch to the open ② or close ① position and release it; it need not be held. The roof will automatically open or close all the way. To stop the roof, push the switch once more while it is opening or closing.

Auto reverse function

WARNING

There are some small distances immediately before the closed position which cannot be detected. Make sure that all passengers have their hands, etc., inside the vehicle before closing the moonroof.

If the control unit detects something caught in the moonroof when it is closing, the moonroof will be immediately opened.

The auto reverse function can be activated when the moonroof is closed by automatic operation when the ignition switch is in the ON position or for about 45 seconds after the ignition switch is pushed to the OFF position.

If the moonroof cannot be closed automatically when the auto reverse function activates due to a malfunction, push and hold the moonroof switch to the close position ①.

Depending on the environment or driving conditions, the auto reverse function may be activated if an impact or load similar to something being caught in the moonroof occurs.

If the moonroof does not operate

If the moonroof does not operate properly, perform the following procedure to initialize the moonroof operation system.

1. If the moonroof is open, close it fully by repeatedly pushing the moonroof switch to the close position ① to tilt the moonroof up.
2. Push and hold the switch to the close position ①.
3. Release the moonroof switch after the moonroof moves slightly up and down.
4. Push and hold the switch to the open position ② to fully tilt the moonroof down.
5. Check if the moonroof switch operates normally.

If the moonroof does not operate properly after performing the procedure above, have your moonroof checked and

repaired. It is recommended you visit a NISSAN dealer for this service.

CAUTION

- **Do not leave the light switch on when the engine is not running for extended periods of time to prevent the battery from being discharged.**
- **Turn off the lights when you leave the vehicle.**

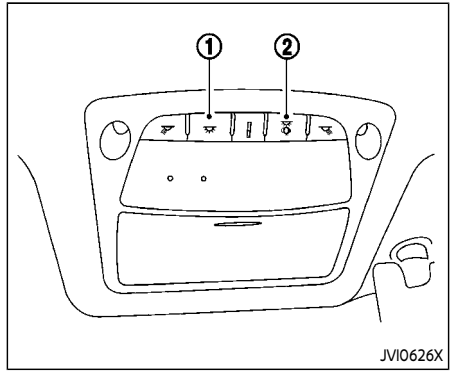

INTERIOR LIGHT SWITCH

① The interior light can be turned ON regardless of door position. The light will go off after a period of time unless the ignition switch is placed in the ON position when any door is opened.

② The interior lights can be set to operate when the doors are opened. To turn off the interior lights when a door open, push the switch, the interior lights will not illuminate, regardless of door position. The lights will go off when the ignition switch is placed in the ON position, or the driver's door is closed and locked. The lights will also go off after a period of time when the doors are open.

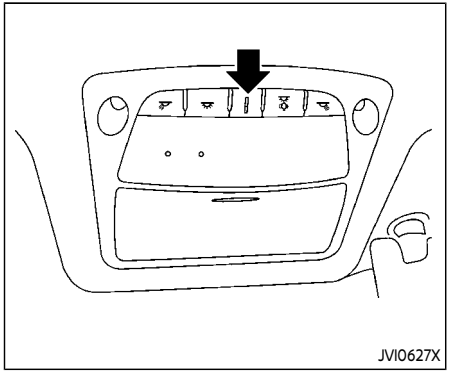

CONSOLE LIGHT (if so equipped)

The console light will turn on whenever the parking lights or headlights are illuminated.

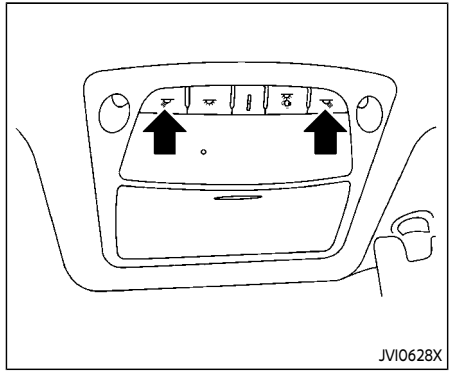

MAP LIGHTS

Push the button to turn the map lights on. To turn them off, push the button again.

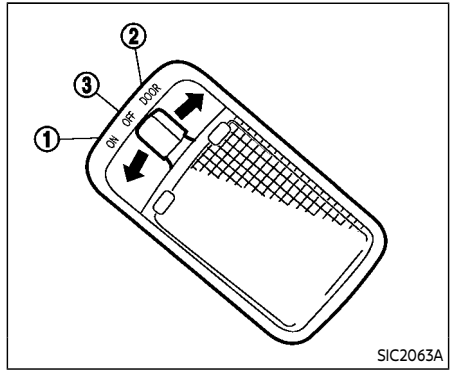

ROOM LIGHT

The room light has a three-position switch.

When the switch is in the ON position ①, the room light illuminates.

When the switch is in the DOOR position ②, the room light illuminates when a door is opened.

The interior light timer will keep the room light on for approximately 15 seconds when:

- The key is removed from the ignition switch with the driver's door closed. (model without Intelligent Key system)

- The ignition switch is placed in the OFF position. (model with Intelligent Key system)

The interior light timer will be cancelled when:

- The driver's door is locked.
- The ignition switch is placed in the ON position.

When the switch is in the OFF position ③, the room light does not illuminate, regardless of any condition.

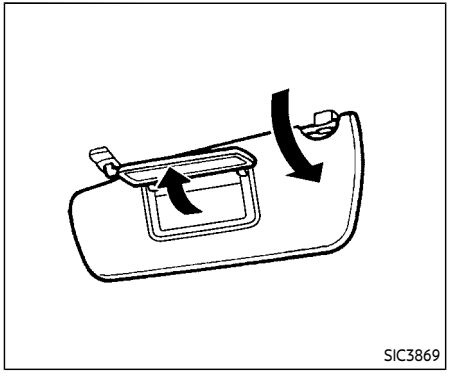

VANITY MIRROR LIGHT (if so equipped)

The light on the vanity mirror will turn on when the cover on the vanity mirror is opened.

When the cover is closed, the light will turn off.

The lights will also turn off after a period of time when the lights remain illuminated to prevent the battery from becoming discharged.

CARGO LIGHT

The cargo lights illuminate when the liftgate is opened. When the liftgate is closed, the lights will turn off.

The light will also turn off after a period of time when the light remains illuminated after the ignition switch has been pushed to the OFF position to prevent the battery from becoming discharged.

MEMO

3 Pre-driving checks and adjustments

Keys 3-2
NISSAN Vehicle Immobilizer System key (if so equipped) 3-2
Intelligent Key (if so equipped) 3-3
Doors 3-5
Locking with key 3-5
Locking with inside lock knob 3-6
Locking with power door lock switch 3-7
Automatic door locks 3-7
Child safety rear door lock 3-7
Remote keyless entry system (if so equipped) 3-8
How to use remote keyless entry system 3-9
Intelligent Key system (if so equipped) 3-11
Intelligent Key operating range 3-13
Door locks/unlocks precaution 3-13
Intelligent Key operation 3-14
Battery saver system 3-16
Warning lights and audible reminders 3-16
Troubleshooting guide 3-17
How to use remote keyless entry function 3-18
Remote engine start (if so equipped) 3-22
Remote engine start operating range 3-22
Remote starting the engine 3-22
Extending engine run time 3-23
Canceling a remote start 3-23
Conditions the remote engine start will not work 3-23
Hood 3-24
Liftgate 3-25
Liftgate release lever 3-26
Fuel-filler door 3-27
Opening the fuel-filler door 3-27
Fuel-filler cap 3-27
Tilt/telescopic steering 3-29
Tilt or telescopic operation 3-30
Sun visors 3-30
Mirrors 3-31
Inside mirror 3-31
Outside mirrors 3-31
Vanity mirror 3-33

A key number plate is supplied with your keys. Record the key number and keep it in a safe place (such as your wallet), not in the vehicle. If you lose your keys, it is recommended you visit a NISSAN dealer for duplicates by using the key number. NISSAN does not record any key numbers so it is very important to keep track of your key number plate.

A key number is only necessary when you have lost all keys and do not have one to duplicate from. If you still have a key, it can be duplicated without knowing the key number.

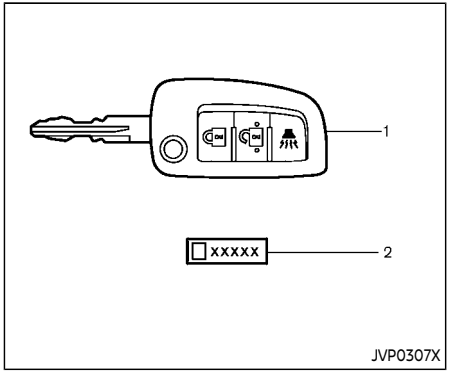

1. Master key (2)
2. Key number plate (1)

NISSAN VEHICLE IMMOBILIZER SYSTEM KEY (if so equipped)

Your vehicle can only be driven with the master keys, which are registered to the NISSAN Vehicle Immobilizer System components. As many as 4 master keys can be registered and used with one vehicle. The new keys must be registered by a NISSAN dealer prior to use with the master of your vehicle. Since the registration process requires erasing all memory in the master components when registering new keys, be sure to take all master keys that you have to the NISSAN dealer.

CAUTION

Do not allow the NISSAN Vehicle Immobilizer System key, which contains an electrical transponder, to come into contact with water or salt water. This could affect the system function.

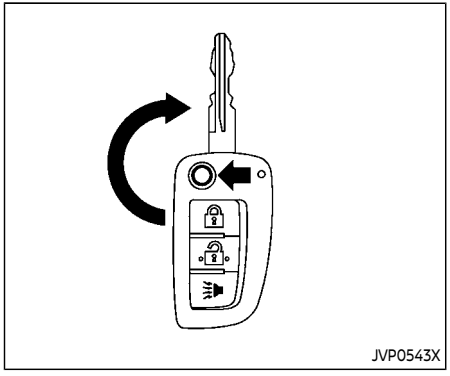

Mechanical key

To unfold the key from the fob, press the release button.

When storing the key, press the release button and push key to fold the key back into fob slot.

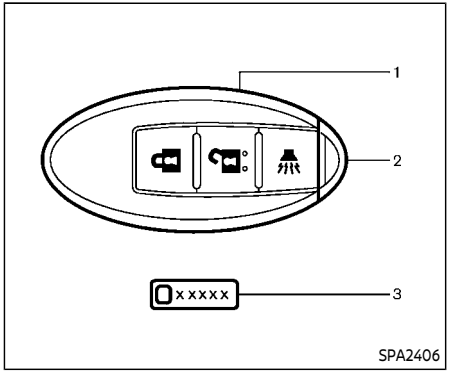

Type A

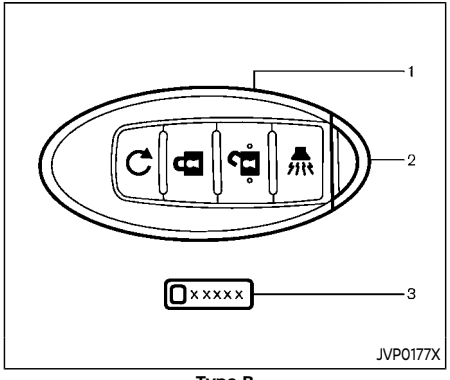

Type B

1. Intelligent Key (2 sets)
2. Mechanical key (inside Intelligent Key) (2 sets)
3. Key number plate

INTELLIGENT KEY (if so equipped)

Your vehicle can only be driven with the Intelligent Keys which are registered to your vehicle's Intelligent Key system components and NISSAN Vehicle Immobilizer System components. As many as 4 Intelligent Keys can be registered and used with one vehicle. The new keys must be registered by a NISSAN dealer prior to use with the Intelligent Key system and NISSAN Vehicle Immobilizer System of your vehicle. Since the registration process requires erasing all memory in the Intelligent Key components when registering new keys, be sure to take all Intelligent Keys that you have to the NISSAN dealer.

CAUTION

- **Be sure to carry the Intelligent Key with you when driving. The Intelligent Key is a precision device with a built-in transmitter. To avoid damaging it, please note the following.**

— The Intelligent Key is water resistant; however, wetting may damage the Intelligent Key. If the Intelligent Key gets wet, immediately wipe until it is completely dry.

— Do not bend, drop or strike it against another object.

— If the outside temperature is below 14°F (-10°C) degrees, the battery of the Intelligent Key may not function properly.

— Do not place the Intelligent Key for an extended period in a place where temperatures exceed 140°F (60°C).

— Do not change or modify the Intelligent Key.

— Do not use a magnet key holder.

— Do not place the Intelligent Key near an electric appliance such as a television set, personal computer or cellular phone.

— Do not allow the Intelligent Key to come into contact with water or salt water, and do not wash it in a washing machine. This could affect the system function.

- **If an Intelligent Key is lost or stolen, NISSAN recommends erasing the ID code of that Intelligent Key. This will prevent the Intelligent Key from unauthorized use to unlock the vehicle. For information regarding the erasing procedure, it is recommended you visit a NISSAN dealer.**

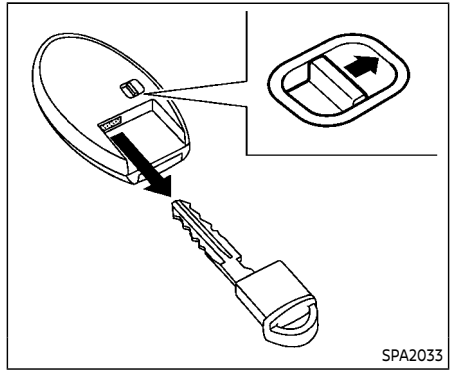

Mechanical key

To remove the mechanical key, release the lock knob at the back of the Intelligent Key.

To install the mechanical key, firmly insert it into the Intelligent Key until the lock knob returns to the lock position.

Use the mechanical key to lock or unlock the doors. (See “Doors” (P.3-5).)

CAUTION

Always carry the mechanical key installed in the Intelligent Key.

WARNING

- **Always have the doors locked while driving. Along with the use of seat belts, this provides greater safety in the event of an accident by helping to prevent persons from being thrown from the vehicle. This also helps keep children and others from unintentionally opening the doors, and will help keep out intruders.**
- **Before opening any door, always look for and avoid oncoming traffic.**
- **To help avoid risk of injury or death through unintended operation of the vehicle and or its systems, including entrapment in windows or inadvertent door lock activation, do not leave children, people who require the assistance of others or pets unattended in your vehicle. Additionally, the temperature inside a closed vehicle on a warm day can quickly become high enough to cause a significant risk of injury or death to people and pets.**

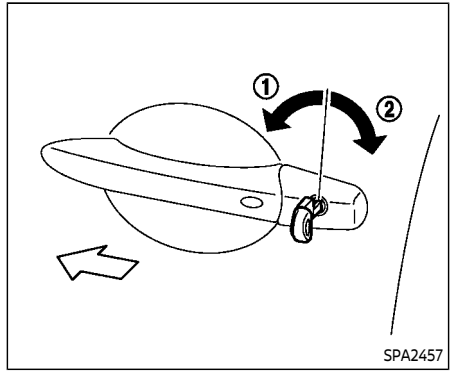

LOCKING WITH KEY

The power door lock system allows you to lock or unlock all doors simultaneously.

- Turning the driver's door key cylinder to the front of the vehicle ① will lock all doors and the liftgate.
- Turning the driver's door key cylinder once to the rear of the vehicle ② will unlock the driver's door. After returning the key to the neutral position, turning it to the rear again within 5 seconds will unlock all doors and the liftgate.
- You can switch the lock system to the mode that allows you to open all the doors when the key is turned once.

(See “Vehicle Settings” (P.2-22).)

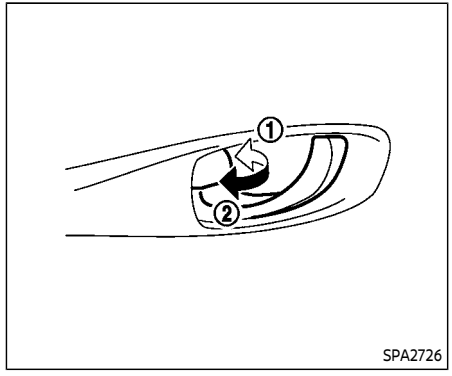

LOCKING WITH INSIDE LOCK KNOB

To lock the door without the key, move the inside lock knob to the lock position ① then close the door.

To unlock, move the inside lock knob to the unlock position ②.

When locking the door without a key, be sure not to leave the key inside the vehicle.

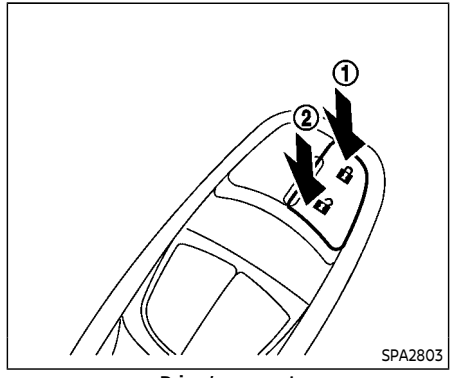

Driver’s armrest

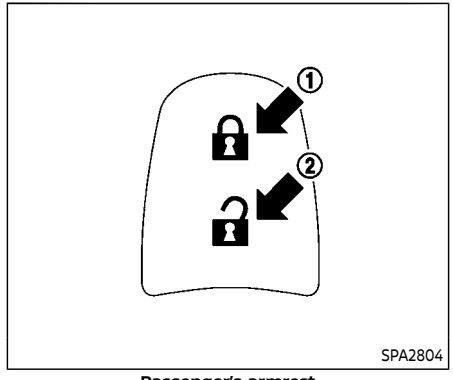

Passenger’s armrest

LOCKING WITH POWER DOOR LOCK SWITCH

Operating the power door lock switch (located on the driver's and front passenger's doors) will lock or unlock all the doors.

To lock the doors, push the power door lock switch to the lock position ① with the driver's and front passenger's doors open, then close the door.

When locking the door this way, be sure not to leave the key inside the vehicle.

To unlock the doors, push the power door lock switch to the unlock position ②.

Lockout protection

Lockout protection function helps to prevent the keys from being accidentally locked inside the vehicle.

When the power door lock switch (driver's or front passenger's side) is moved to the lock position with the Intelligent Key left in the vehicle (models with Intelligent Key system) or the key left in the ignition switch (models without Intelligent Key system) and any door open, all doors will unlock automatically and a chime will sound after the door is closed.

AUTOMATIC DOOR LOCKS

- All doors lock automatically when the vehicle speed reaches 15 MPH (24 km/h).
- All doors unlock automatically when the ignition switch is placed in the OFF position or when the shift lever is moved to the P (Park) position, if selected (CVT model).

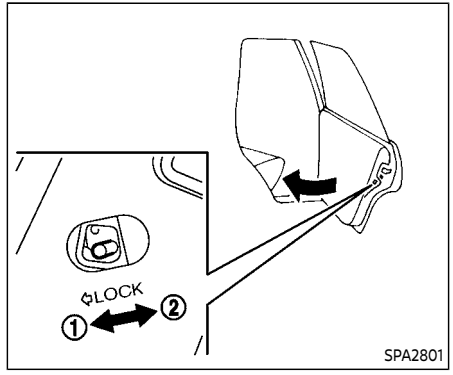

CHILD SAFETY REAR DOOR LOCK

Child safety rear door locks help prevent the rear doors from being opened accidentally, especially when small children are in the vehicle.

When the levers are in the lock position ①, the rear doors can be opened only from the outside.

To disengage, move the levers to the unlock position ②.

REMOTE KEYLESS ENTRY SYSTEM (if so equipped)

It is possible to lock/unlock all doors (including the liftgate), and activate the panic alarm by using the key fob from outside the vehicle.

Before locking the doors, make sure the key is not left in the vehicle.

The key fob can operate at a distance of approximately 33 ft (10 m) from the vehicle. (The effective distance depends upon the conditions around the vehicle.)

As many as 4 key fobs can be used with one vehicle. For information concerning the purchase and use of additional key fobs, contact a NISSAN dealer.

The key fob will not function:

- When the key fob is not within the operational range.
- When the doors are open or not closed securely.
- When the key is in the ignition switch.
- When the battery is discharged.

WARNING

The remote keyless entry key fob transmits radio waves when the buttons are pushed. The FAA advises that the radio waves may affect aircraft navigation and communication systems. Do not operate the key fob while on an airplane. Make sure the buttons are not operated unintentionally when the unit is stored during a flight.

CAUTION

The following conditions or occurrences will damage the key fob.

- **Do not allow the key fob to become wet.**
- **Do not drop the key fob.**
- **Do not strike the key fob sharply against another object.**
- **If the outside temperature is below 14°F (-10°C) degrees, the battery of key fob may not function properly.**
- **Do not place the key fob for an extended period in an area where temperatures exceed 140°F (60°C).**

If a key fob is lost or stolen, NISSAN recommends erasing the ID code of that key fob. This will prevent the key fob from unauthorized use to unlock the vehicle. For information regarding the erasing procedure, it is recommended that you visit a NISSAN dealer.

For information regarding the replacement of a battery, see "Key fob battery replacement" (P.8-21).

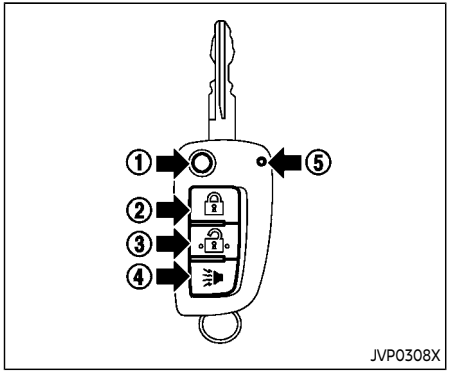

① Jackknife type key release button
② LOCK button
③ UNLOCK button
④ PANIC button
⑤ Battery indicator light

HOW TO USE REMOTE KEYLESS ENTRY SYSTEM

Welcome light and farewell light function

When you lock or unlock the doors or the liftgate, the daytime running lights, parking lights and the tail lights will illuminate for a period of time. The welcome light and farewell light function can be disabled. For information about disabling the welcome light and farewell light function, see "Vehicle Settings" (P.2-22).

Locking doors

1. Remove the key from the ignition switch.
2. Close all the doors.
3. Push the LOCK button ② on the key fob.
4. All the doors will lock.

   All of the doors will lock when the LOCK button is pushed even though a door remains open.
5. The hazard indicator flashes twice and the horn chirps once.

- When the LOCK button is pushed with all doors locked, the hazard indicator flashes twice and the horn chirps once as a reminder that the doors are already locked.
- Operate the door handles to confirm that the doors have been securely locked.

Unlocking doors

1. Push the UNLOCK button ③ on the key fob.
   - The driver's door unlocks.
   - The hazard indicator flashes once if all doors are completely closed.
2. Push the UNLOCK button again within 5 seconds.
   - All the doors and the liftgate unlock.
   - The hazard indicator flashes once if all doors are completely closed.

All doors will be locked automatically unless one of the following operations is performed within 1 minute of pushing the UNLOCK button.

- Any door or liftgate is opened.
- The ignition switch is placed in the ON position.

NOTE:

The unlocking operation can be changed in selective unlock in the Vehicle Settings of the vehicle information display. For additional information, refer to "Vehicle Settings" (P.2-22).

Using panic alarm

If you are near your vehicle and feel threatened, you may activate the alarm to call attention as follows:

1. Push the PANIC button ④ on the key fob for **more than 0.5 seconds.**
2. The theft warning alarm and headlights will stay on for 25 seconds.
3. The panic alarm stops when:
   - It has run for 25 seconds, or

- Any of the buttons on the key fob is pushed. (Note: the PANIC button must be pushed for more than 1 second.)

Battery indicator light

The battery indicator light ⑤ illuminates when you push any button. If the light does not illuminate, the battery is weak or needs replacement. For information regarding replacement of a battery, see “Key fob battery replacement” (P.8-21).

Setting hazard indicator and horn mode

This vehicle is set in hazard indicator and horn mode when you first receive the vehicle.

In hazard indicator and horn mode, when the LOCK button ② is pushed, the hazard indicator flashes twice and the horn chirps once. When the UNLOCK button ③ is pushed, the hazard indicator flashes once.

If the horn chirp is not necessary, you can switch to hazard indicator only mode by following the switching procedure.

In hazard indicator only mode, when the LOCK button is pushed, the hazard indicator flashes twice. When the UNLOCK button is pushed, neither the hazard indicator nor the horn operates.

Mode (Pushing the button)	DOOR LOCK	DOOR UNLOCK
Hazard indicator and horn mode	HAZARD - **twice** HORN - **once**	HAZARD - **once** HORN - none
Hazard indicator mode	HAZARD - **twice**	HAZARD - none

Switching procedure:

To switch the hazard indicator and horn operation, push the LOCK 🔒 ② and UNLOCK 🔓 ③ buttons on the key fob simultaneously for more than 2 seconds.

- When the hazard indicator mode is set, the hazard indicator flashes 3 times.
- When the hazard indicator and horn mode is set, the hazard indicator flashes once and the horn chirps once.

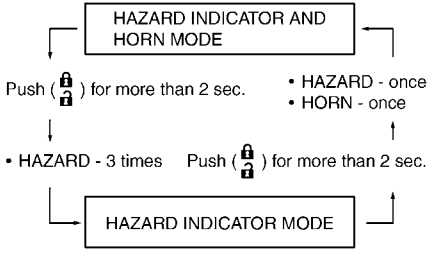

The horn operation can also be turned on or off in the vehicle information display. See "Vehicle Settings" (P.2-22).

⚠ WARNING

- **Radio waves could adversely affect electric medical equipment. Those who use a pacemaker should contact the electric medical equipment manufacturer for the possible influences before use.**
- **The Intelligent Key transmits radio waves when the buttons are pushed. The FAA advises that the radio waves may affect aircraft navigation and communication systems. Do not operate the Intelligent Key while on an airplane. Make sure the buttons are not operated unintentionally when the unit is stored during a flight.**

The Intelligent Key system can operate all the door locks using the remote controller function or pushing the request switch on the vehicle without taking the key out from a pocket or purse. The operating environment and/or conditions may affect the Intelligent Key system operation.

Be sure to read the following before using the Intelligent Key system.

⚠ CAUTION

- **Be sure to carry the Intelligent Key with you when operating the vehicle.**
- **Never leave the Intelligent Key in the vehicle when you leave the vehicle.**

The Intelligent Key is always communicating with the vehicle as it receives radio waves. The Intelligent Key system transmits weak radio waves. Environmental conditions may interfere with the operation of the Intelligent Key system under the following operating conditions.

- When operating near a location where strong radio waves are transmitted, such as a TV tower, power station and broadcasting station.
- When in possession of wireless equipment, such as a cellular phone, transceiver, and CB radio.
- When the Intelligent Key is in contact with or covered by metallic materials.
- When any type of radio wave remote control is used nearby.
- When the Intelligent Key is placed near an electric appliance such as a personal computer.

- When the vehicle is parked near a parking meter.

In such cases, correct the operating conditions before using the Intelligent Key function or use the mechanical key.

Although the life of the battery varies depending on the operating conditions, the battery's life is approximately 2 years. If the battery is discharged, replace it with a new one.

Since the Intelligent Key is continuously receiving radio waves, if the key is left near equipment which transmits strong radio waves, such as signals from a TV and personal computer, the battery life may become shorter.

For information regarding replacement of a battery, see "Intelligent Key battery replacement" (P.8-23).

As many as 4 Intelligent Keys can be registered and used with one vehicle. For information about the purchase and use of additional Intelligent Keys, it is recommended that you contact a NISSAN dealer.

CAUTION

- **Do not allow the Intelligent Key, which contains electrical components, to come into contact with water or salt water. This could affect the system function.**
- **Do not drop the Intelligent Key.**
- **Do not strike the Intelligent Key sharply against another object.**
- **Do not change or modify the Intelligent Key.**
- **Wetting may damage the Intelligent Key. If the Intelligent Key gets wet, immediately wipe until it is completely dry.**
- **If the outside temperature is below 14°F (−10°C) degrees, the battery of the Intelligent Key may not function properly.**
- **Do not place the Intelligent Key for an extended period in an area where temperatures exceed 140°F (60°C).**
- **Do not attach the Intelligent Key with a key holder that contains a magnet.**
- **Do not place the Intelligent Key near equipment that produces a magnetic field, such as a TV, audio equipment, personal computers or cellular phone.**

If an Intelligent Key is lost or stolen, NISSAN recommends erasing the ID code of that Intelligent Key from the vehicle. This may prevent the unauthorized use of the Intelligent Key to operate the vehicle. For information regarding the erasing procedure, it is recommended that you contact a NISSAN dealer.

The Intelligent Key function can be disabled. For information about disabling the Intelligent Key function, it is recommended that you contact a NISSAN dealer.

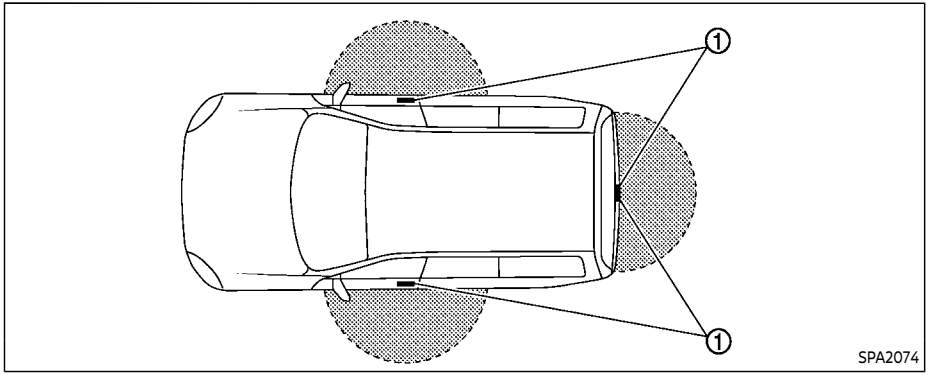

INTELLIGENT KEY OPERATING RANGE

The Intelligent Key functions can only be used when the Intelligent Key is within the specified operating range from the request switch ①.

When the Intelligent Key battery is discharged or strong radio waves are present near the operating location, the Intelligent Key system's operating range becomes narrower, and the Intelligent Key may not function properly.

The operating range is within 31.50 in (80 cm) from each request switch ①.

If the Intelligent Key is too close to the door glass, handle or rear bumper, the request switches may not function.

When the Intelligent Key is within the operating range, it is possible for anyone who does not carry the Intelligent Key to push the request switch to lock/unlock the doors including the liftgate.

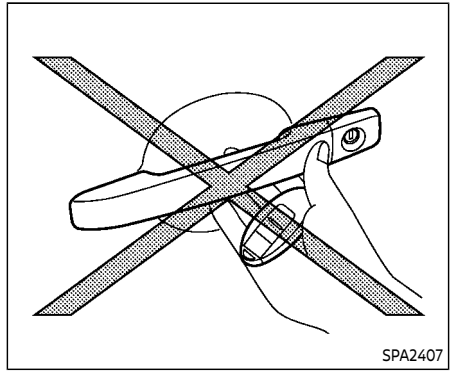

DOOR LOCKS/UNLOCKS PRECAUTION

- Do not push the door handle request switch with the Intelligent Key held in your hand as illustrated. The close distance to the door handle will cause the Intelligent Key system to have difficulty recognizing that the Intelligent Key is outside the vehicle.
- After locking with the door handle request switch, verify the doors are securely locked by testing them.
- To prevent the Intelligent Key from being left inside the vehicle, make sure you carry the key with you and then lock the doors.

- Do not pull the door handle before pushing the door handle request switch. The door will be unlocked but will not open. Release the door handle once and pull it again to open the door.

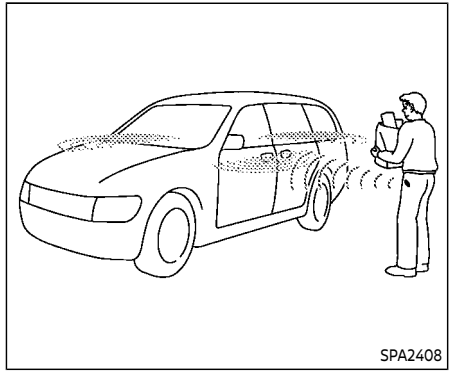

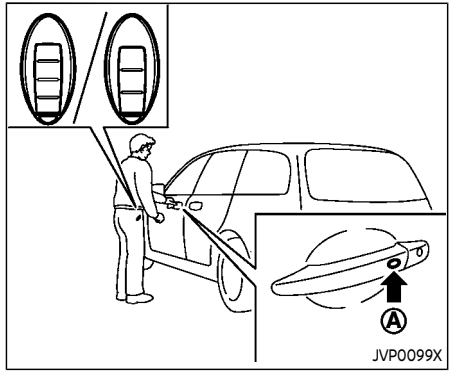

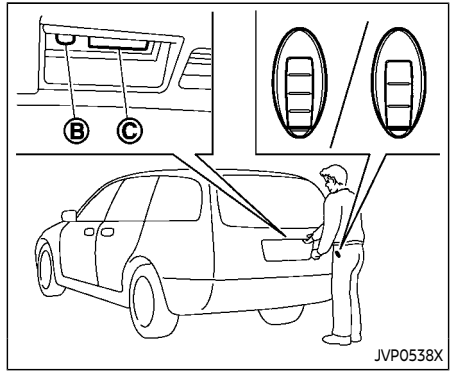

INTELLIGENT KEY OPERATION

You can lock or unlock the doors without taking the key out from your pocket or bag.

When you carry the Intelligent Key with you, you can lock or unlock all doors by pushing the door handle request switch (driver's or front passenger's) Ⓐ or liftgate request switch Ⓑ within the range of operation.

When you lock or unlock the doors, the hazard indicator will flash and the horn (or the outside chime) will sound as a confirmation. For details, see "Setting hazard indicator and horn mode" (P.3-20).

Welcome light and farewell light function

When you lock or unlock the doors or the liftgate, the daytime running lights, parking lights and the tail lights will illuminate for a period of time. The welcome light and farewell light function can be disabled. For information about disabling the welcome light and farewell light function, see "Vehicle Settings" (P.2-22).

Locking doors

1. Move the shift lever to the P (Park) position (Continuously Variable Transmission (CVT) models), or the shift lever in the N (Neutral) position (Manual Transmission (MT) models), place the ignition switch in the OFF position and make sure you carry the Intelligent Key with you.
2. Close all doors.
3. Push any door handle request switch while carrying the Intelligent Key with you.
4. All doors and the liftgate will lock.
5. The hazard indicator lights flash twice and the outside buzzer sounds twice.

NOTE:

- **Request switches for all doors and the liftgate can be deactivated when the I-Key Door Lock setting is turned off in the Vehicle Settings of the vehicle information display. For additional information, see "Vehicle Settings" (P.2-22).**
- **Doors lock with the door handle request switch while the ignition switch is not in the LOCK position.**
- **Doors do not lock by pushing the door handle request switch while any door is open. However, doors lock with the mechanical key even if any door is open.**
- **Doors do not lock with the door handle request switch with the Intelligent Key inside the vehicle and a beep sounds to warn you. However, when an Intelligent Key is inside the vehicle, doors can be locked with another Intelligent Key.**

CAUTION

- **After locking the doors using the request switch, make sure that the doors have been securely locked by operating the door handles or the liftgate opener switch.**
- **When locking the doors using the request switch, make sure to have the Intelligent Key in your possession before operating the request switch to prevent the Intelligent Key from being left in the vehicle.**
- **The request switch is operational only when the Intelligent Key has been detected by the Intelligent Key system.**

Unlocking doors

1. Push the door handle request switch Ⓐ or the liftgate request switch Ⓑ while carrying the Intelligent Key with you.
2. The hazard indicator flashes once and outside chime sounds once. The corresponding door or the liftgate will unlock.
3. Push the request switch again within 1 minute.
4. The hazard indicator flashes once and outside chime sounds once again. All the doors and the liftgate will unlock.

All doors will be locked automatically unless one of the following operations is performed within 1 minute after pushing the request switch while the doors are locked.

- Opening any door.

- Pushing the ignition switch.

During this 1-minute time period, if the UNLOCK button on the Intelligent Key is pushed, all doors will be locked automatically after another 1 minute.

NOTE:

The unlocking operation can be changed in selective unlock in the Vehicle Settings of the vehicle information display. For additional information, see "Vehicle Settings" (P.2-22).

Opening liftgate

1. Carry the Intelligent Key.
2. Push the liftgate opener switch ©.
3. The liftgate will unlock.

BATTERY SAVER SYSTEM

When all the following conditions are met for a period of time, the battery saver system will cut off the power supply to prevent battery discharge.

- The ignition switch is in the ON position. (See "Push-button ignition switch positions" (P.5-16).)
- All doors are closed, and
- The shift lever is in the P (Park) position (CVT model) or N (Neutral) position (MT model).

WARNING LIGHTS AND AUDIBLE REMINDERS

To help prevent the vehicle from moving unexpectedly by erroneous operation of the Intelligent Key listed on the following chart or to help prevent the vehicle from being stolen, chime or beep sounds inside and outside the vehicle and the warning display appears on the vehicle information display.

When a chime or beep sounds or the warning display appears, be sure to check the vehicle and Intelligent Key.

See "Troubleshooting guide" (P.3-17) and "Vehicle information display" (P.2-18).

TROUBLESHOOTING GUIDE

Verify the location of all Intelligent Keys that are programmed for the vehicle. If another Intelligent Key is in range or inside the vehicle, the vehicle system may respond differently than expected.

Symptom		Possible cause	Action to take
When stopping the engine (CVT model)	The Shift to Park warning appears on the display and the inside warning chime sounds continuously.	The shift lever is not in the P (Park) position.	Move the shift lever to the P (Park) position.
When opening the driver's door to get out of the vehicle	The Door/liftgate open warning appears on the display.	The ignition switch is in the ON position.	Place the ignition switch in the OFF position.
When closing the door after getting out of the vehicle	The No Key Detected warning appears on the display, the outside chime sounds three times and the inside warning chime sounds for approximately three seconds.	The ignition switch is in the ON position.	Place the ignition switch in the OFF position.
	The red Shift to Park warning appears on the display and the inside side chime sounds continuously. (CVT model)	The ignition switch is in the ON position and the shift lever is not in the P (Park) position.	Move the shift lever to the P (Park) position and place the ignition switch in the OFF position.
When closing the door with the inside lock knob turned to LOCK	The outside chime sounds for approximately three seconds and all the doors unlock.	The Intelligent Key is inside the vehicle.	Carry the Intelligent Key with you.
When pushing the door handle request switch or the LOCK button on the Intelligent Key to lock the door	The outside chime sounds for approximately three seconds.	The Intelligent Key is inside the vehicle.	Carry the Intelligent Key with you.
When pushing the ignition switch to start the engine	The Key battery low warning appears on the display.	The battery charge is low.	Replace the battery with a new one. (See "Intelligent Key battery replacement" (P.8-23).)
	The Key ID Incorrect warning appears on the display.	The Intelligent Key is not in the vehicle.	Carry the Intelligent Key with you.
When pushing the ignition switch	The Key System Error warning appears on the display.	It warns of a malfunction with the Intelligent Key system.	It is recommended that you contact a NISSAN dealer.

HOW TO USE REMOTE KEYLESS ENTRY FUNCTION

WARNING

- **Radio waves could adversely affect electric medical equipment. Those who use a pacemaker should contact the electric medical equipment manufacturer for the possible influences before use.**
- **The Intelligent Key transmits radio waves when the buttons are pushed. The FAA advises that the radio waves may affect aircraft navigation and communication systems. Do not operate the Intelligent Key while on an airplane. Make sure the buttons are not operated unintentionally when the unit is stored during a flight.**

CAUTION

- **Do not allow the Intelligent Key, which contains electrical components, to come into contact with water or salt water. This could affect the system function.**
- **Do not drop the Intelligent Key.**
- **Do not strike the Intelligent Key sharply against another object.**
- **Do not change or modify the Intelligent Key.**
- **Wetting may damage the Intelligent Key. If the Intelligent Key gets wet, immediately wipe until it is completely dry.**
- **If the outside temperature is below 14°F (-10°C) degrees, the battery of the Intelligent Key may not function properly.**
- **Do not place the Intelligent Key for an extended period in an area where temperatures exceed 140°F (60°C).**
- **Do not attach the Intelligent Key with a key holder that contains a magnet.**
- **Do not place the Intelligent Key near equipment that produces a magnetic field, such as a TV, audio equipment, personal computers or cellular phone.**

The remote keyless entry function can operate all door locks using the remote keyless entry function of the Intelligent Key. The remote keyless entry function can operate at a distance of approximately 33 ft (10 m) from the vehicle. (The operating distance depends upon the conditions around the vehicle.)

The remote keyless entry function will not operate:

- When the Intelligent Key is not within the operational range.
- When the doors are open or not closed securely.
- When the Intelligent Key battery is discharged.

The remote keyless entry function can also operate the vehicle alarm.

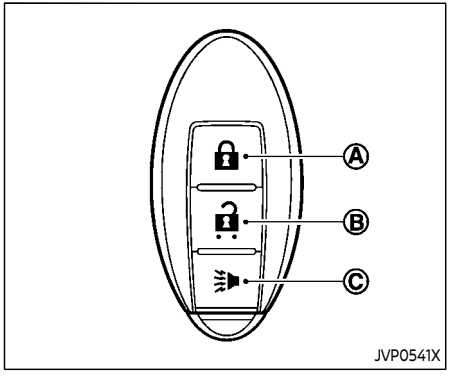

Type A

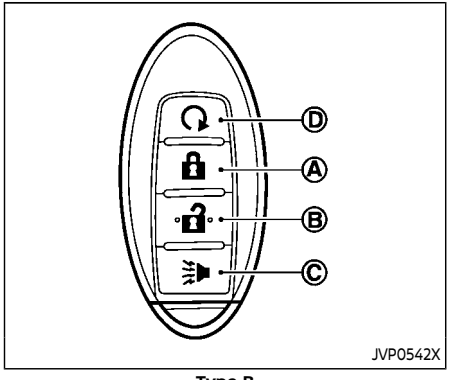

Type B

Ⓐ LOCK button
Ⓑ UNLOCK button
Ⓒ PANIC button
Ⓓ Remote engine start button

When you lock or unlock the doors or the liftgate, the hazard indicator will flash and the horn (or the outside chime) will sound as a confirmation. For details, see "Setting hazard indicator and horn mode" (P.3-20).

Locking doors

1. Place the ignition switch in the OFF position.
2. Carry the Intelligent Key with you.*
3. Close all the doors.
4. Push the LOCK button Ⓐ on the Intelligent Key.
5. All the doors and the liftgate will lock.
6. The hazard indicator flashes twice and the horn chirps once.

*: Doors will lock with the Intelligent Key while the ignition switch is in the ON position.

Operate the door handles to confirm that the doors have been securely locked.

Unlocking doors

1. Push the UNLOCK button Ⓑ on the Intelligent Key once.
2. The hazard indicator flashes once. The driver's door will unlock.
3. Push the UNLOCK button again within 5 seconds.
4. The hazard indicator flashes once. All the doors and the liftgate will unlock.

All doors will be locked automatically unless one of the following operations is performed within 1 minute after pushing the UNLOCK button while the doors are locked.

- Opening any door (including the liftgate).
- Pushing the ignition switch.

During this 1-minute time period, if the UNLOCK button is pushed, all doors will be locked automatically after another 1 minute.

NOTE:

The unlocking operation can be changed in selective unlock in the Vehicle Settings of the vehicle information display. For additional information, see "Vehicle Settings" (P.2-22).

Using panic alarm

If you are near your vehicle and feel threatened, you may activate the alarm to call attention as follows:

1. Push the PANIC button Ⓒ on the Intelligent Key for **more than 0.5 seconds.**
2. The theft warning alarm and headlights will stay on for 25 seconds.
3. The panic alarm stops when:
   - It has run for 25 seconds, or
   - Any of the buttons on the Intelligent Key is pushed. (Note: the PANIC button must be pushed for more than 0.5 seconds.)

Remote engine start (if so equipped)

The remote engine start button Ⓓ is on the Intelligent Key if the vehicle has remote engine start function. This function allows the engine to start from outside the vehicle. See “Remote engine start” (P.3-22).

Setting hazard indicator and horn mode

This vehicle is set in hazard indicator and horn mode when you first receive the vehicle.

In hazard indicator and horn mode, when the LOCK button Ⓐ is pushed, the hazard indicator flashes twice and the horn chirps once. When the UNLOCK button Ⓑ is pushed, the hazard indicator flashes once.

If horns are not necessary, the system can be switched to the hazard indicator mode.

In hazard indicator mode, when the LOCK button is pushed, the hazard indicator flashes twice. When the UNLOCK button is pushed, neither the hazard indicator nor the horn operates.

Hazard indicator and horn mode:

Operation	DOOR LOCK	DOOR UNLOCK
Pushing door handle request switch or liftgate request switch	HAZARD - **twice** OUTSIDE CHIME - **twice**	HAZARD - **once** OUTSIDE CHIME - **once**
Pushing 🔒 or 🔓 button	HAZARD - **twice** HORN - **once**	HAZARD - **once** HORN - none

Hazard indicator mode:

Operation	DOOR LOCK	DOOR UNLOCK
Pushing door handle request switch or liftgate request switch	HAZARD - **twice** OUTSIDE CHIME - none	HAZARD - none OUTSIDE CHIME - none
Pushing 🔒 or 🔓 button	HAZARD - **twice** HORN - none	HAZARD - none HORN - none

Switching procedure:

To switch the hazard indicator and horn (chime) operation, push the LOCK 🔒 Ⓐ and UNLOCK 🔓 Ⓑ buttons on the Intelligent Key simultaneously for more than 2 seconds.

- When the hazard indicator mode is set, the hazard indicator flashes 3 times.
- When the hazard indicator and horn mode is set, the hazard indicator flashes once and the horn chirps once.

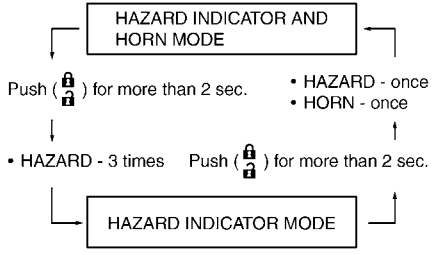

The horn operation can also be turned on or off in the vehicle information display. See "Vehicle Settings" (P.2-22).

WARNING

To avoid risk of injury or death, do not use the remote engine start function when the vehicle is in an enclosed area such as a garage.

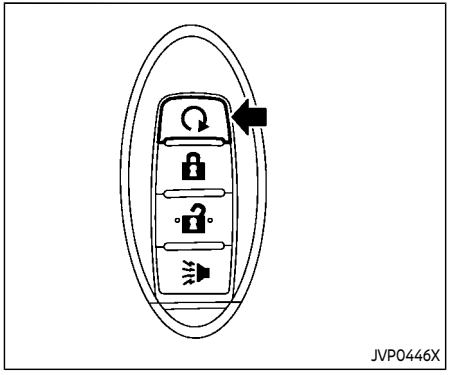

The remote engine start button is on the Intelligent Key if the vehicle has remote engine start function. This function allows the engine to start from outside the vehicle.

Some systems, such as the air conditioner system, will turn on during a remote start, if the system was on the last time the ignition switch was turned off.

Laws in some local communities may restrict the use of remote starters. For example, some laws require a person using remote start to have the vehicle in view. Check local regulations for any requirements.

Other conditions may affect the remote engine start function. See "Conditions the remote engine start will not work" (P.3-23).

Other conditions can affect the performance of the Intelligent Key transmitter. See "Intelligent Key system" (P.3-11) for additional information.

REMOTE ENGINE START OPERATING RANGE

The remote engine start function can only be used when the Intelligent Key is within the specified operating range from the vehicle.

When the Intelligent Key battery is discharged or other strong radio wave sources are present near the operating location, the Intelligent Key operating range becomes narrower, and the Intelligent Key may not function properly.

The remote engine start operating range is approximately 197 ft (60 m) from the vehicle.

REMOTE STARTING THE ENGINE

To use the remote start function to start the engine, perform the following:

1. Aim the Intelligent Key at the vehicle.
2. Push the LOCK button to lock all doors.

3. Within 5 seconds push and hold the remote engine start button until the turn signal lights flash and the tail lights illuminate. If the vehicle is not within view, push and hold the remote engine start button for at least 2 seconds.

The following events will occur when the engine starts:

- The front parking lights will turn on and remain on as long as the engine is running.
- The doors will be locked and the air conditioner system may turn on.
- The engine will continue to run for about 10 minutes. Repeat the steps to extend the time for an additional 10 minutes. See "Extending engine run time" (P.3-23).

Depress and hold the brake pedal, then place the ignition switch in the ON position before driving. For further instructions, see "Driving the vehicle" (P.5-20).

EXTENDING ENGINE RUN TIME

The remote engine start function can be extended one time by performing the steps listed in "Remote starting the engine" (P.3-22). Run time will be calculated as follows:

- The first 10 minute run time will start when the remote engine start function is performed.
- The second 10 minutes will start immediately when the remote engine start function is performed. For example, if the engine has been running for 5 minutes, and 10 minutes are added, the engine will run for a total of 15 minutes.
- Extending engine run time will count towards the two remote start limit.

A maximum of two remote starts, or a single start with an extension, are allowed between ignition cycles.

The ignition switch must be cycled to the ON position and then back to the OFF position before the remote engine start procedure can be used again.

CANCELING A REMOTE START

To cancel a remote start, perform one of the following:

- Aim the Intelligent Key at the vehicle and push and hold the remote engine start button until the front parking lights turn off.
- Turn on the hazard indicator flashers.
- Cycle the ignition switch ON and then OFF.
- The extended engine run time has expired.
- The first 10 minute timer has expired.
- The engine hood has been opened.
- The shift lever is moved out of the P (Park) position.
- The theft alarm sounds due to illegal entry into the vehicle.
- The ignition switch is pushed without an Intelligent Key in the vehicle.
- The ignition switch is pushed with an Intelligent Key in the vehicle but the brake pedal is not depressed.

CONDITIONS THE REMOTE ENGINE START WILL NOT WORK

The remote engine start will not operate if any of the following conditions are present:

- The ignition switch is placed in the ON position.
- The hood is not securely closed.
- The hazard indicator flashers are on.
- The engine is still running. The engine must be completely stopped. Wait at least 6 seconds if the engine goes from running to off. This is not applicable when extending engine run time.
- The remote engine start button is not pushed and held for at least 2 seconds.
- The remote engine start button is not pushed and held within 5 seconds

of pushing the LOCK button.

- The brake pedal is depressed.
- The doors are not closed and locked.
- The liftgate is open.
- The Key System Error warning message remains on in the vehicle information display.
- An Intelligent Key is left inside the vehicle.
- The theft alarm sounds due to illegal entry into the vehicle.
- Two remote engine starts, or a single remote start with an extension, have already been used.
- The shift lever is not in the P (Park) position.
- The remote start function has been switched to the OFF position in Vehicle Settings of the vehicle information display. For additional information, see "Vehicle Settings" (P.2-22).

The remote engine start may display a warning or indicator in the vehicle information display. For an explanation of the warning or indicator, see "Vehicle information display warnings and indicators" (P.2-28).

WARNING

- **Make sure the hood is completely closed and latched before driving. Failure to do so could cause the hood to fly open and result in an accident.**
- **Never open the hood if steam or smoke is coming from the engine compartment to avoid injury.**

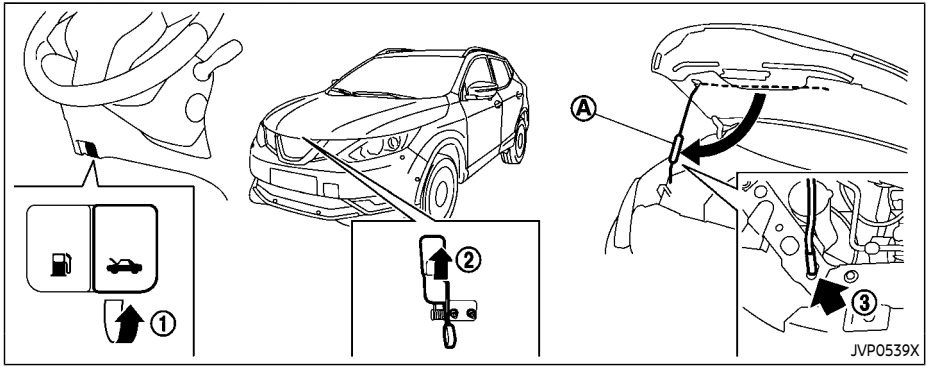

1. Pull the hood lock release handle ① located below the instrument panel until the hood springs up.
2. Locate the lever ② in between the hood and grille, and push the lever up with your fingertips.
3. Raise the hood.
4. Remove the support rod and insert it into the slot ③.

Hold the coated part Ⓐ when removing or resetting the support rod. Avoid direct contact with the metal parts, as they may be hot immediately after the engine has been stopped.

When closing the hood:

1. While supporting the hood, return the support rod to its original position.
2. Slowly lower the hood to about 8 to 12 in (20 to 30 cm) above the hood lock, then let it drop.
3. Make sure it is securely latched.

WARNING

- **Always be sure the liftgate has been closed securely to prevent it from opening while driving.**
- **Do not drive with the liftgate open. This could allow dangerous exhaust gases to be drawn into the vehicle. For additional information, refer to "Exhaust gas (carbon monoxide)" (P.5-4).**
- **To help avoid risk of injury or death through unintended operation of the vehicle and or its systems, including entrapment in windows or inadvertent door lock activation, do not leave children, people who require the assistance of others or pets unattended in your vehicle. Additionally, the temperature inside a closed vehicle on a warm day can quickly become high enough to cause a significant risk of injury or death to people and pets.**
- **Always be sure that hands and feet are clear of the door frame to avoid injury while closing the liftgate.**

CAUTION

Do not use accessory carriers that attach to the liftgate. Doing so will cause damage to the vehicle.

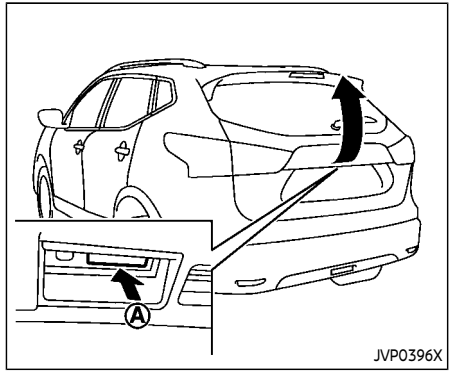

To open the liftgate, unlock it and push the opener switch Ⓐ. Pull up the liftgate to open.

The liftgate can be unlocked by:

- pushing the UNLOCK button on the key.
- pushing the liftgate request switch (if so equipped).
- pushing the door handle request switch (if so equipped).
- pushing the power door lock switch to the unlock position.

To close the liftgate, pull down until it securely locks.

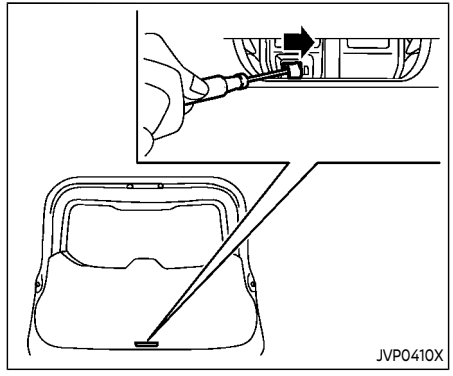

LIFTGATE RELEASE LEVER

If the liftgate cannot be opened with the power door lock switch due to a discharged battery, follow these steps.

1. Fold the rear seats down. See “Seats” (P.1-2).
2. Remove the cover plate from the lock using a suitable tool.
3. Move the release lever to the right using a suitable tool as illustrated. The liftgate will be unlatched.
4. Push the liftgate up to open.

It is recommended that you visit a NISSAN dealer as soon as possible for repair.

WARNING

- **Fuel is extremely flammable and highly explosive under certain conditions. You could be burned or seriously injured if it is misused or mishandled. Always stop the engine and do not smoke or allow open flames or sparks near the vehicle when refueling.**
- **Fuel may be under pressure. Turn the cap a half of a turn, and wait for any "hissing" sound to stop to prevent fuel from spraying out and possibly causing personal injury. Then remove the cap.**
- **Use only an original equipment type fuel-filler cap as a replacement. It has a built-in safety valve needed for proper operation of the fuel system and emission control system. An incorrect cap can result in a serious malfunction and possible injury.**

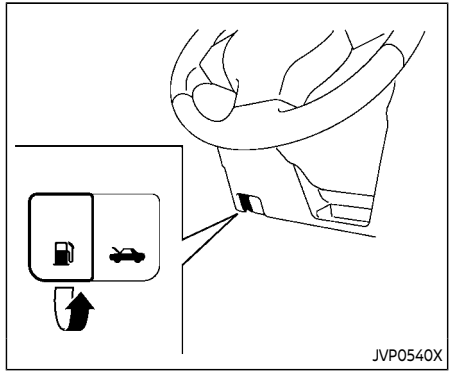

OPENING THE FUEL-FILLER DOOR

To open the fuel-filler door, pull the release handle located below the instrument panel. To lock, close the fuel-filler door securely.

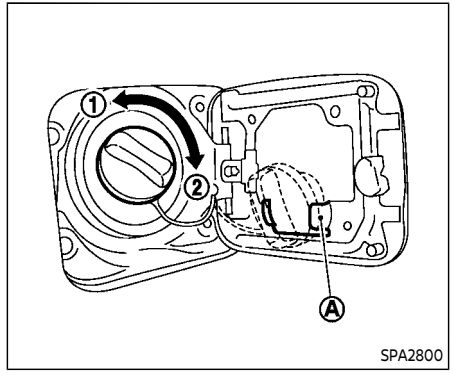

FUEL-FILLER CAP

To remove the fuel-filler cap:

1. Turn the fuel-filler cap counterclockwise ① to remove.
2. Put the fuel-filler cap on the cap holder Ⓐ while refueling.

To install the fuel-filler cap:

1. Insert the fuel-filler cap straight into the fuel-filler tube.
2. Turn the fuel-filler cap clockwise ② until a single click is heard.

WARNING

- **Gasoline is extremely flammable and highly explosive under certain conditions. You could be burned or seriously injured if it is misused or mishandled. Always stop engine and do not smoke or allow open flames or sparks near the vehicle when refueling.**
- **Do not attempt to top off the fuel tank after the fuel pump nozzle shuts off automatically. Continued refueling may cause fuel overflow, resulting in fuel spray and possibly a fire.**
- **Use only an original equipment type fuel-filler cap as a replacement. It has a built-in safety valve needed for proper operation of the fuel system and emission control system. An incorrect cap can result in a serious malfunction and possible injury. It could also cause the malfunction indicator light to come on.**
- **Never pour fuel into the throttle body to attempt to start your vehicle.**
- **Do not fill a portable fuel container in the vehicle or trailer. Static electricity can cause an explosion of flammable liquid, vapor or gas in any vehicle or trailer. To reduce the risk of serious injury or death when filling portable fuel containers:**
  - **Always place the container on the ground when filling.**
  - **Do not use electronic devices when filling.**
  - **Keep the pump nozzle in contact with the container while you are filling it.**
  - **Use only approved portable fuel containers for flammable liquid.**

CAUTION

- **If fuel is spilled on the vehicle body, flush it away with water to avoid paint damage.**
- **Insert the cap straight into the fuel-filler tube, then tighten until the fuel-filler cap clicks. Failure to tighten the fuel-filler cap properly may cause the malfunction indicator light (MIL) to illuminate. If the light illuminates because the fuel-filler cap is loose or missing, tighten or install the cap and continue to drive the vehicle. The light should turn off after a few driving trips. If the light does not turn off after a few driving trips, have the vehicle inspected. It is recommended you visit a NISSAN dealer for this service.**

  For additional information, see "Malfunction Indicator Light (MIL)" (P.2-16).
- **The LOOSE FUEL CAP warning message will be displayed if the fuel-filler cap is not properly tightened. It may take a few driving trips for the message to be displayed. Failure to tighten the fuel-filler cap properly after the LOOSE FUEL CAP warning message is displayed may cause the Malfunction Indicator Light (MIL) to illuminate.**

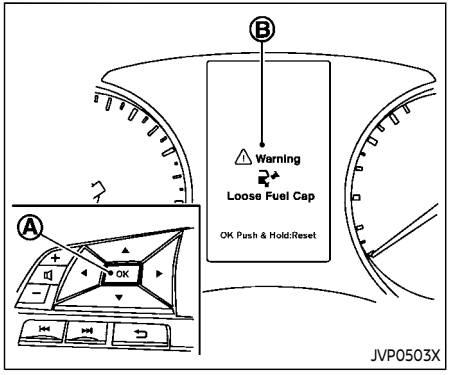

LOOSE FUEL CAP warning message

The LOOSE FUEL CAP warning message Ⓑ is displayed on the vehicle information display when the fuel-filler cap is not tightened correctly after the vehicle has been refueled. It may take a few driving trips for the message to be displayed. To turn off the warning message, do the following procedure:

1. Remove and install the fuel-filler cap as soon as possible. For additional information, refer to "Fuel-filler cap" (P.3-27).
2. Tighten the fuel-filler cap until it clicks.
3. Push the OK button Ⓐ on the steering wheel for about 1 second to turn off the LOOSE FUEL CAP warning message after tightening the fuel cap.

WARNING

Do not adjust the steering wheel while driving. You could lose control of your vehicle and cause an accident.

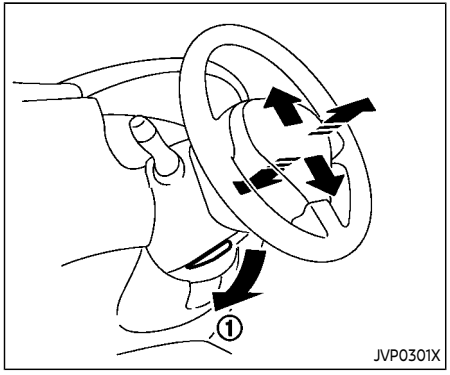

TILT OR TELESCOPIC OPERATION

Pull the lock lever ① down and adjust the steering wheel up, down, forward or rearward to the desired position. Push the lock lever up securely to lock the steering wheel in place.

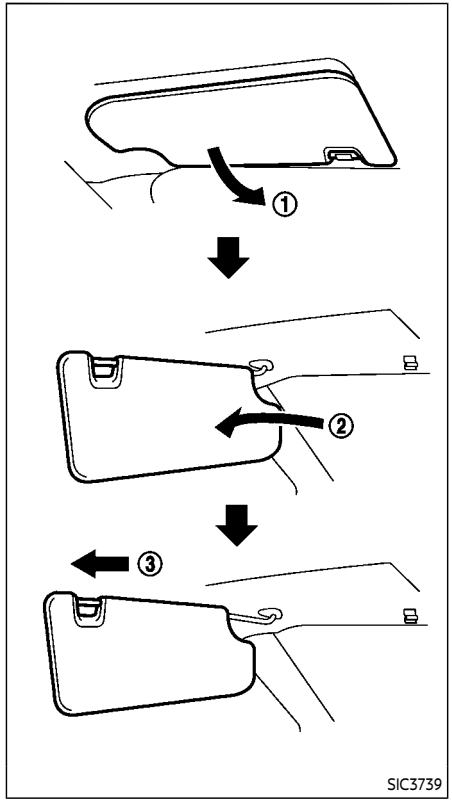

1. To block glare from the front, swing down the main sun visor ①.
2. To block glare from the side, remove the main sun visor from the center mount and swing it to the side ②.
3. Slide the sun visor ③ in or out as needed.

CAUTION

- **Do not store the sun visor before returning the extension to its original position.**
- **Do not pull the extension sun visor forcedly downward.**

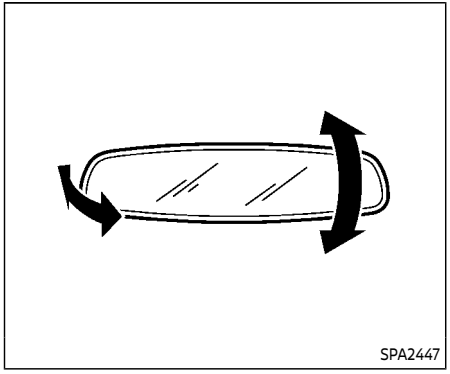

INSIDE MIRROR

Adjust the angle of the inside mirror to the desired position.

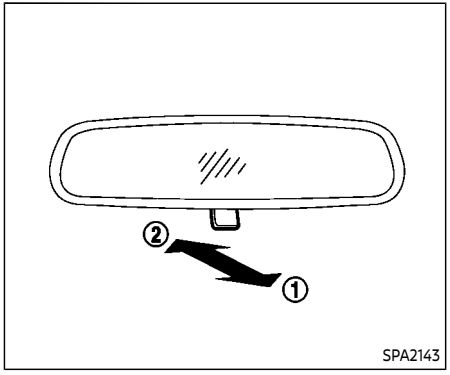

The night position ① will reduce glare from the headlights of vehicles behind you at night.

Use the day position ② when driving in daylight hours.

WARNING

Use the night position only when necessary, because it reduces rear view clarity.

OUTSIDE MIRRORS

WARNING

Objects viewed in the outside mirror on the passenger side are closer than they appear. Be careful when moving to the right. Using only this mirror could cause an accident. Use the inside mirror or glance over your shoulder to properly judge distances to other objects.

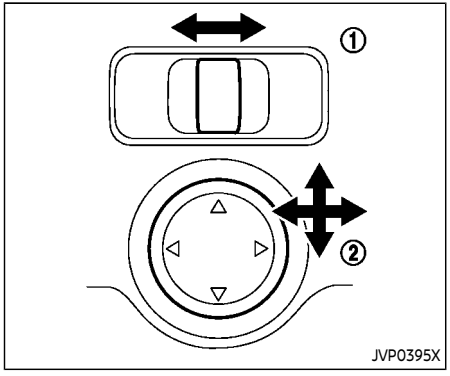

Adjusting outside mirrors

The outside mirror control switch is located on the driver's armrest.

The outside mirror will operate only when the ignition switch is in the ACC or ON position.

Move the switch right or left to select the right or left side mirror ①, then adjust ② using the control switch.

Defrosting outside mirrors (if so equipped)

The outside mirrors will be heated when the rear window defroster switch is operated. (See "Rear window and outside mirror defroster switch" (P.2-42).)

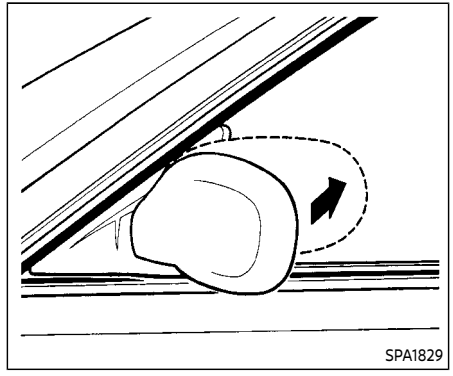

Foldable outside mirrors

Fold the outside mirror by pushing it toward the rear of the vehicle.

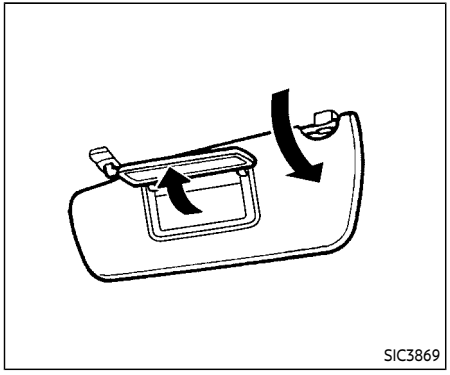

VANITY MIRROR

To use the front vanity mirror, pull down the sun visor and pull up the cover.

MEMO

4 Heater, air conditioner, audio and phone systems

Safety note 4-3
Control buttons and functions (models with navigation system) 4-3
How to use touch screen 4-4
How to use the BACK button 4-5
How to use the APPS·i button 4-5
How to use brightness control button 4-8
How to use the POWER/VOLUME dial 4-8
How to use the ENTER AUDIO/TUNE·SCROLL dial 4-8
RearView Monitor (if so equipped) 4-8
RearView Monitor system operation 4-9
How to read the displayed lines 4-9
Difference between predictive and actual distances 4-10
Adjusting the screen 4-12
RearView Monitor system limitations 4-12
System maintenance 4-13
Intelligent Around View® Monitor (if so equipped) 4-14
Intelligent Around View® Monitor system operation 4-15
Difference between predictive and actual distances 4-18
How to park with predictive course lines 4-20
How to switch the display 4-21
Adjusting the screen 4-21
Intelligent Around View® Monitor system limitations 4-22
System maintenance 4-24
Moving Object Detection (MOD) (if so equipped) 4-25
MOD system operation 4-25
Turning MOD on and off 4-27
MOD system limitations 4-27
System maintenance 4-28
Ventilators 4-29
Center ventilators 4-29
Side ventilators 4-29
Rear ventilators (if so equipped) 4-29
Heater and air conditioner 4-30
Manual air conditioner and heater 4-31
Automatic air conditioner and heater 4-35
Operating tips (for automatic air conditioner) 4-37
Servicing air conditioner 4-37
Audio system 4-38
Audio operation precautions 4-38
FM-AM radio with Compact Disc (CD) player 4-48
FM-AM-SAT radio with Compact Disc (CD) player (Type A) (if so equipped) 4-55

FM-AM-SAT radio with Compact Disc (CD) player (Type B) (if so equipped) 4-63
USB (Universal Serial Bus) connection port 4-74
AUX (Auxiliary) input jack 4-75
Steering wheel switch for audio control 4-75
Antenna 4-77
CD/USB memory care and cleaning 4-77
NissanConnect℠ Mobile Apps smartphone integration (if so equipped) 4-78
Registering with NissanConnect℠ Mobile Apps 4-78
Connect phone 4-78
Application download 4-78
NissanConnect℠ Services (if so equipped) 4-79
Siri® Eyes Free 4-79
General Information 4-79
Requirements 4-79
Siri® Eyes Free Activation 4-80
Operating Siri® Eyes Free 4-80
Changing Siri® Eyes Free Settings (models with navigation system) 4-80
Changing Siri® Eyes Free Settings (models without navigation system) 4-81
Troubleshooting guide 4-82
Car phone or CB radio 4-83
Bluetooth® Hands-Free Phone System (models without navigation system) 4-83
Regulatory information 4-84
Using the system 4-85
Bluetooth® Hands-Free Phone System (models with navigation system) 4-93
Regulatory information 4-94
Control buttons and microphone 4-95
Voice command 4-95
Connecting procedure 4-96
Vehicle phonebook 4-96
Making a call 4-97
Receiving a call 4-97
During a call 4-97
Ending a call 4-97
Text messaging (if so equipped) 4-97
Phone and Bluetooth® settings 4-99
NISSAN Voice Recognition system (models with navigation system) 4-100
Using the system 4-101
System features 4-102
Phone voice commands 4-103
Navigation system voice commands 4-103
Audio system voice commands 4-104
Information voice commands 4-104
My APPS voice commands 4-104
Help voice commands 4-104
Troubleshooting guide 4-104

SAFETY NOTE

WARNING

- **Do not disassemble or modify this system. If you do, it may result in accidents, fire, or electric shock.**
- **Do not use this system if you notice any abnormality, such as a frozen screen or lack of sound. Continued use of the system may result in accident, fire or electric shock.**
- **In case you notice any foreign object in the system hardware, spill liquid on it, or notice smoke or smell coming from it, stop using the system immediately. It is recommended you visit a NISSAN dealer for servicing. Ignoring such conditions may lead to accidents, fire, or electric shock.**

Do not attempt to operate the system in extreme temperature conditions [below −4˚F (−20˚C) and above 158˚F (70˚C)]. Operating this system under these conditions may result in system malfunctions.

CONTROL BUTTONS AND FUNCTIONS (models with navigation system)

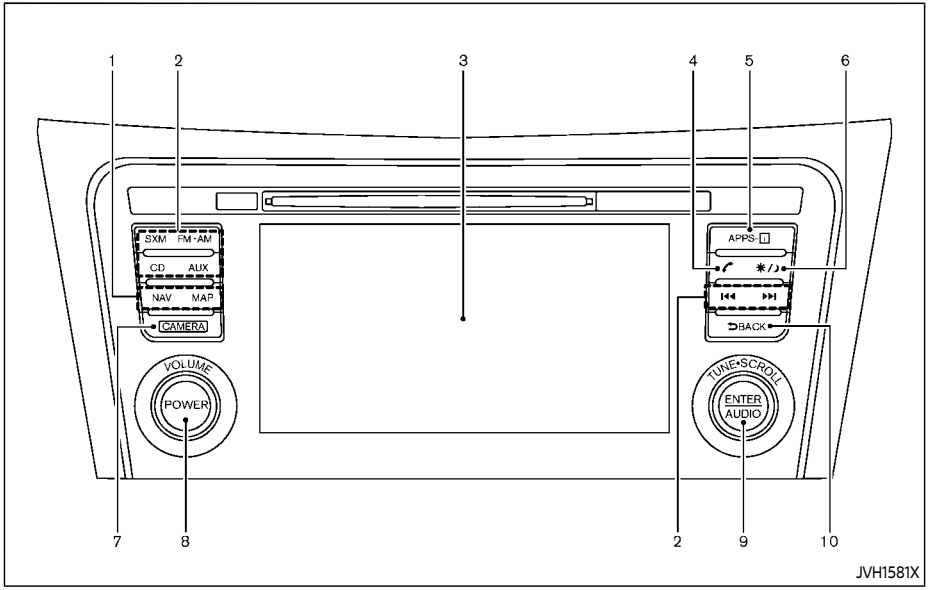

1. For information regarding the Navigation system control buttons, refer to the separate Navigation System Owner's Manual.
2. Audio control buttons (P.4-63)
3. Touch screen (P.4-4)
4. button (P.4-93)
5. APPS·i button (P.4-5)
6. (brightness control) button (P.4-8)
7. CAMERA button (P.4-14)
8. POWER/VOLUME dial (P.4-8)
9. ENTER AUDIO/TUNE·SCROLL dial (P.4-8)
10. BACK button (P.4-5)

When you use this system, make sure the engine is running.

If you use the system with the engine not running for a long time, it will discharge the battery, and the engine will not start.

Reference symbols:

"Example" — Words marked in quotes refer to a key shown only on the display. These keys can be selected by touching the screen.

HOW TO USE TOUCH SCREEN

CAUTION

- **The glass screen on the liquid crystal display may break if it is hit with a hard or sharp object. If the glass screen breaks, do not touch it. Doing so could result in an injury.**
- **To clean the display, never use a rough cloth, alcohol, benzine, thinner or any kind of solvent or paper towel with a chemical cleaning agent. They will scratch or deteriorate the panel.**
- **Do not splash any liquid such as water or car fragrance on the display. Contact with liquid will cause the system to malfunction.**

To help ensure safe driving, some functions cannot be operated while driving.

The on-screen functions that are not available while driving will be "grayed out" or muted.

Park the vehicle in a safe location and then operate the navigation system.

WARNING

- **ALWAYS give your full attention to driving.**
- **Avoid using vehicle features that could distract you. If distracted, you could lose control of your vehicle and cause an accident.**

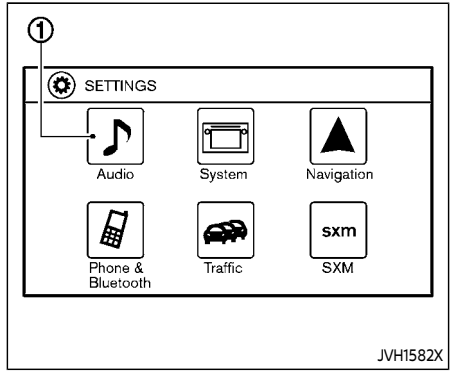

Touch screen operation

Selecting the item:

Touch an item to select. To select the "Audio" key, touch the "Audio" key ① on the screen.

Adjusting the item:

Touch the "+" key or the "–" key to adjust the settings of an item. Touch the up arrow to scroll up the page. Touch the down arrow to scroll down the page.

Inputting characters:

Touch the letter or the number key. There are some options available when inputting characters.

- 123/ABC:
  Changes the keyboard between numbers and alphabets.
- Space:
  Inserts a space.
- Delete:
  Deletes the last inputted character with one touch. Touch and hold the "Delete" key to delete all of the characters.
- OK:
  Completes the character input.

Touch screen maintenance

If you clean the touch screen, use a dry, soft cloth. If additional cleaning is necessary, use a small amount of neutral detergent with a soft cloth. Never spray the screen with water or detergent. Dampen the cloth first and then wipe the screen.

HOW TO USE THE BACK BUTTON

Push the BACK button to return to the previous screen.

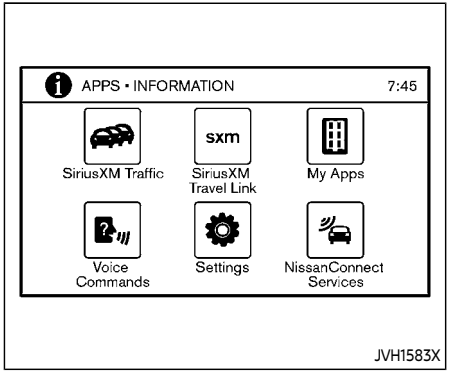

Example

HOW TO USE THE APPS·i BUTTON

For information about the "SiriusXM Travel Link", "SiriusXM Traffic" and "NissanConnect Services" (if so equipped) features, see the separate Navigation System Owner's Manual.

For information about the "My Apps" key, see "NissanConnect℠ Mobile Apps smartphone integration" (P.4-78).

For information about the "Voice Commands" key, see "NISSAN Voice Recognition system (models with navigation system)" (P.4-100).

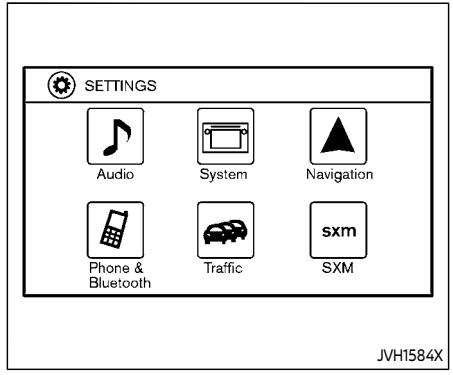

Displaying settings menu

To select and/or adjust several functions, features and modes that are available for your vehicle:

1. Push the APPS·i button.
2. Touch the "Settings" key.
3. Touch the desired item.

Available setting items may vary depending on models and specifications.

Menu Item			Result
Audio			For more details, see “Audio main operation” (P.4-63).
System	Display	Brightness	Adjusts the brightness of the display.
		Display Mode	Adjusts to fit the level of lighting in the vehicle. Touch key to cycle through options. “Day” and “Night” modes are suited for the respective times of day while “Auto” controls the display automatically.
		Scroll Direction	Adjust the scroll direction of ENTER AUDIO/TUNE·SCROLL dial. Choose to either move up or down.
	Clock/Date	Time Format	The clock can be set to 12 hours or 24 hours.
		Date Format	The format of the day, month and year display can be selected.
		Clock Mode	Adjust the mode for the clock. “Auto” uses the system’s GPS to automatically maintain the time. “Manual” allows you to set the clock using the “Set Clock/Date Manually” key. Select “Time Zone” to have the time set to a specific time zone.
		Set Clock/Date Manually	Adjust the clock manually. Touch the “+” or “-” keys to adjust the hours, minutes, day, month and year up or down. “Clock Mode” must be set to “Manual” for this option to be available. When the “Time Format” is set to “12h”, switching between “AM” and “PM” can be done by touching “MODE”.
		Daylight Savings Time	Adjusts the daylight savings time on or off. “Clock Mode” must be set to “Time Zone” for this option to be available.
		Time Zone	Choose the applicable time zone from the list.
	Language		Touch this key to change the language on the display.
	NissanConnect Services Settings		See the separate Navigation System Owner’s Manual for detail information.
	Camera Settings	Display Mode	Touch this key to select the camera screen display mode (day, night, or automatic).
		Brightness	Adjust camera screen brightness.
		Contrast	Adjust camera screen contrast.
		Color	Adjust camera screen color.

Menu Item		Result
	Temperature Unit	Touch this key to change the temperature unit being displayed (Fahrenheit or Celsius).
	Touchscreen Click	Toggles the touch screen click feature on or off. When activated, a click sound will be heard every time a key on the screen is touched.
	System Beeps	Toggle the system beep tones feature on or off. When activated, a beep sound will be heard when a pop-up message appears on the screen or a button on the unit (such as the ☀/☽ button) is pushed and held for a few seconds.
	Return to Factory Settings / Clear Memory	Touch this key to return all settings to default and to clear the memory.
	Software Licenses	Touch this key to display software licensing information.
	Minimize Voice Feedback	Use this function to minimize the amount of prompts spoken by the system.
	System Software Version	This displays the software version your navigation system is currently running.
Navigation		See the separate Navigation System Owner's Manual for detail information.
Phone & Bluetooth		For more details, see "Phone and Bluetooth® settings" (P.4-99).
Traffic		Touch this key to display traffic settings. See the separate Navigation System Owner's Manual for more information.
SXM		Touch this key to display SXM status information. For SXM setup, see "Audio main operation" (P.4-63).

HOW TO USE BRIGHTNESS CONTROL BUTTON

Push the ☀/☽ button to change the display brightness between the Auto mode and the Night mode. The brightness control bar will also be displayed. While the brightness control bar is being displayed, the brightness can be adjusted using the ENTER AUDIO/TUNE·SCROLL dial.

Push and hold the ☀/☽ button to turn the display off. Push the button again to turn the display on.

HOW TO USE THE POWER/VOLUME DIAL

Push the POWER/VOLUME dial to turn the audio function on and off. Turn the POWER/VOLUME dial to adjust the volume. (See "FM-AM-SAT radio with Compact Disc (CD) player (Type B)" (P.4-63)

HOW TO USE THE ENTER AUDIO/TUNE·SCROLL DIAL

Turn the ENTER AUDIO/TUNE·SCROLL dial to select items on the screen and to adjust the levels of setting items. Push the dial to confirm the selected item or setting. (See "FM-AM-SAT radio with Compact Disc (CD) player (Type B)" (P.4-63)

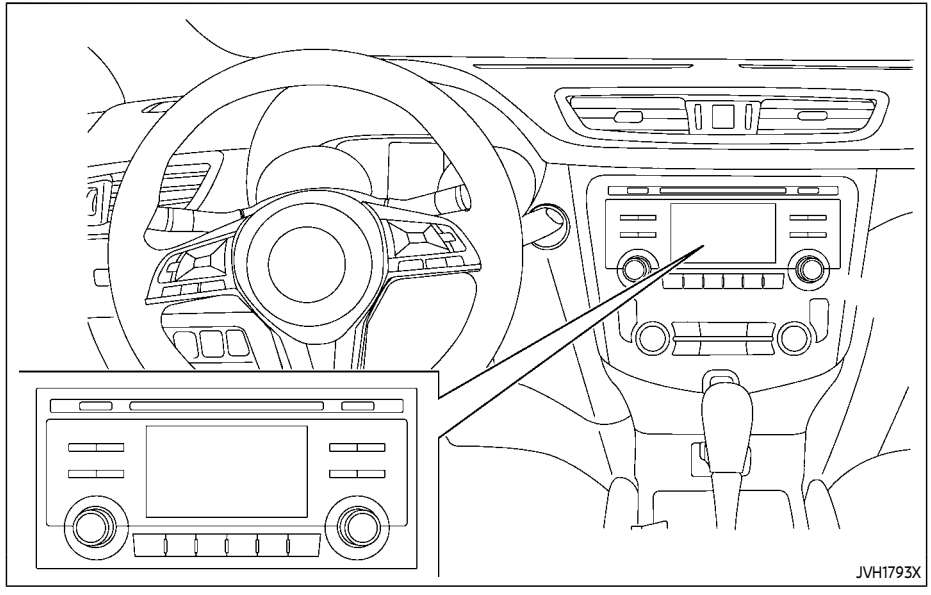

⚠ WARNING

- **Failure to follow the warnings and instructions for proper use of the RearView Monitor could result in serious injury or death.**
- **RearView Monitor is a convenience feature and is not a substitute for proper backing. Always turn and look out the windows, and check mirrors to be sure that it is safe to move before operating the vehicle. Always back up**

slowly.

- **The system is designed as an aid to the driver in showing large stationary objects directly behind the vehicle, to help avoid damaging the vehicle.**
- **The distance guide line and the vehicle width line should be used as a reference only when the vehicle is on a level paved surface. The distance viewed on the monitor is for reference only and may be different than the actual distance between the vehicle and displayed objects.**

CAUTION

Do not scratch the camera lens when cleaning dirt or snow from the front of the camera.

The RearView Monitor system automatically shows a rear view of the vehicle when the shift lever is placed in the R (Reverse) position.

The radio can still be heard while the RearView Monitor is active.

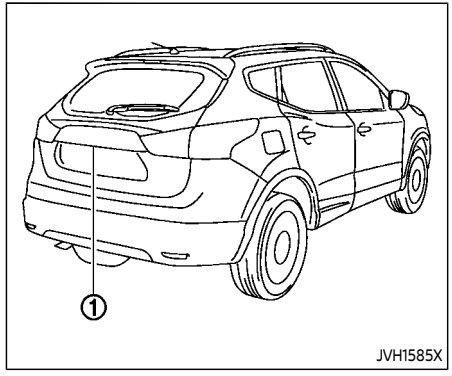

To display the rear view, the RearView Monitor system uses a camera located just above the vehicle's license plate ①.

REARVIEW MONITOR SYSTEM OPERATION

When the ignition switch is placed in the ACC or ON position, move the shift lever to the R (Reverse) position to operate the RearView Monitor.

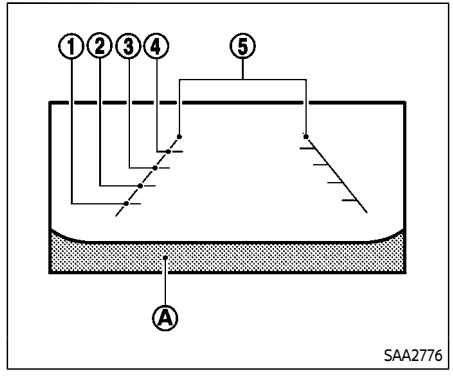

HOW TO READ THE DISPLAYED LINES

Guiding lines which indicate the vehicle width and distances to objects with reference to the bumper line Ⓐ are displayed on the monitor.

Distance guide lines:

Indicate distances from the bumper.

- Red line ①: approx. 1.5 ft (0.5 m)
- Yellow line ②: approx. 3 ft (1 m)
- Green line ③: approx. 7 ft (2 m)
- Green line ④: approx. 10 ft (3 m)

Vehicle width guide lines ⑤:

Indicate the vehicle width when backing up.

DIFFERENCE BETWEEN PREDICTIVE AND ACTUAL DISTANCES

The displayed guidelines and their locations on the ground are for approximate reference only. Objects on uphill or downhill surfaces or projecting objects will be actually located at distances different from those displayed in the monitor relative to the guidelines (refer to illustrations). When in doubt, turn around and view the objects as you are backing up, or park and exit the vehicle to view the positioning of objects behind the vehicle.

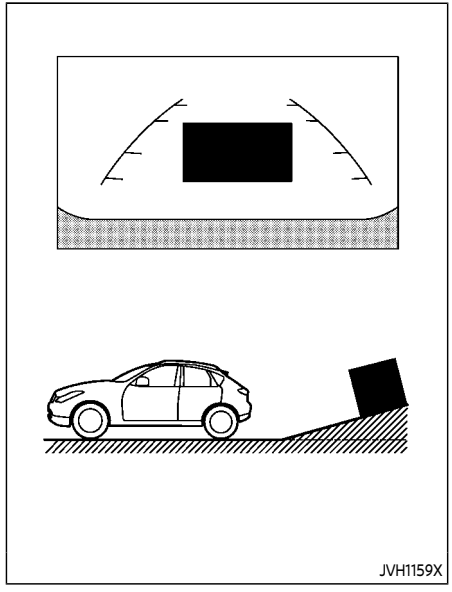

Backing up on a steep uphill

When backing up the vehicle up a hill, the distance guide lines and the vehicle width guide lines are shown closer than the actual distance. Note that any object on the hill is farther than it appears on the monitor.

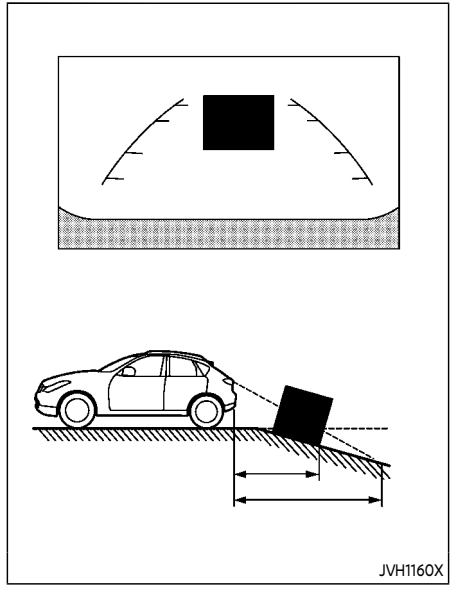

Backing up on a steep downhill

When backing up the vehicle down a hill, the distance guide lines and the vehicle width guide lines are shown farther than the actual distance. Note that any object on the hill is closer than it appears on the monitor.

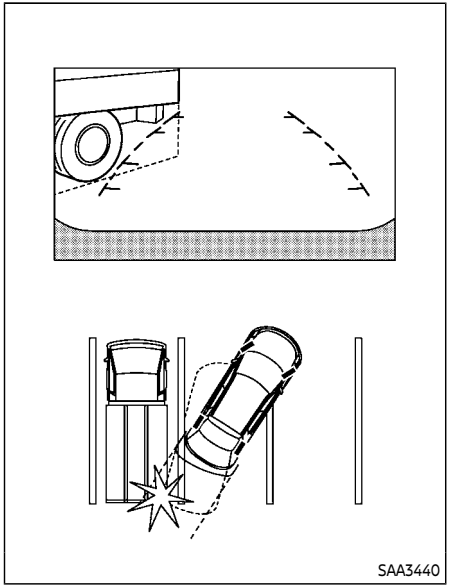

Backing up near a projecting object

The vehicle may seem to nearly clear the object in the display. However, the vehicle may hit the object if it projects over the actual backing up course.

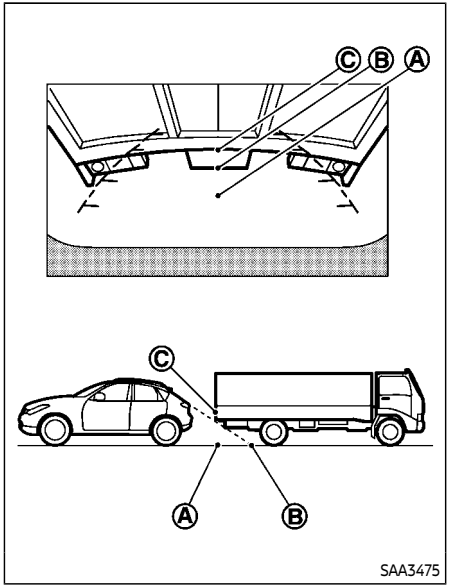

Backing up behind a projecting object

The position Ⓒ is shown farther than the position Ⓑ in the display. However, the position Ⓒ is actually at the same distance as the position Ⓐ. The vehicle may hit the object when backing up to the position Ⓐ if the object projects over the actual backing up course.

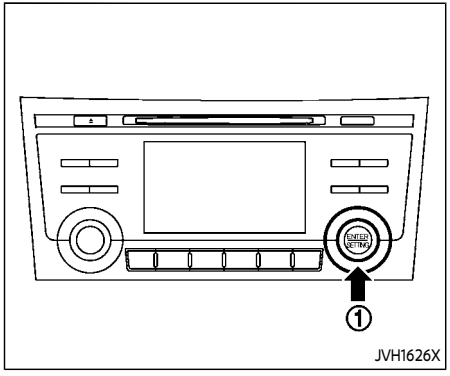

ADJUSTING THE SCREEN

1. Push the ENTER SETTING button ① while the RearView Monitor screen is displayed.
2. Adjust the brightness using the ENTER SETTING button ①.
3. Push the ENTER SETTING button ① and adjust the contrast using the ENTER SETTING button ①.
4. Push the ENTER SETTING button ① to return to the RearView Monitor screen.

NOTE:

Do not adjust any of the display settings of the RearView Monitor while the vehicle is moving. Make sure the parking brake is firmly applied.

REARVIEW MONITOR SYSTEM LIMITATIONS

WARNING

Listed below are the system limitations for RearView Monitor. Failure to operate the vehicle in accordance with these system limitations could result in serious injury or death.

- **The system cannot completely eliminate blind spots and may not show every object.**
- **Underneath the bumper and the corner areas of the bumper cannot be viewed on the RearView Monitor because of its monitoring range limitation. The system will not show small objects below the bumper, and may not show objects close to the bumper or on the ground.**
- **Objects viewed in the RearView Monitor differ from actual distance because a wide-angle lens is used.**
- **Objects in the RearView Monitor will appear visually opposite compared to when viewed in the rearview and outside mirrors.**
- **Use the displayed lines as a reference. The lines are highly affected by the number of occupants, fuel level, vehicle position, road conditions and road grade.**
- **Make sure that the liftgate is securely closed when backing up.**
- **Do not put anything on the rearview camera. The rearview camera is installed above the license plate.**
- **When washing the vehicle with high-pressure water, be sure not to spray it around the camera. Otherwise, water may enter the camera unit causing water condensation on the lens, a malfunction, fire or an electric shock.**
- **Do not strike the camera. It is a precision instrument. Otherwise, it may malfunction or cause damage resulting in a fire or an electric shock.**

The following are operating limitations and do not represent a system malfunction:

- When the temperature is extremely high or low, the screen may not clearly display objects.
- When strong light directly shines on the camera, objects may not be displayed clearly.
- Vertical lines may be seen in objects on the screen. This is due to strong reflected light from the bumper.
- The screen may flicker under fluorescent light.
- The colors of objects on the RearView Monitor may differ somewhat from the actual color of objects.
- Objects on the monitor may not be clear in a dark environment.
- There may be a delay when switching between views.
- If dirt, rain or snow accumulates on the camera, the RearView Monitor may not display objects clearly. Clean the camera.
- Do not use wax on the camera lens. Wipe off any wax with a clean cloth dampened with a diluted mild cleaning agent, then wipe with a dry cloth.

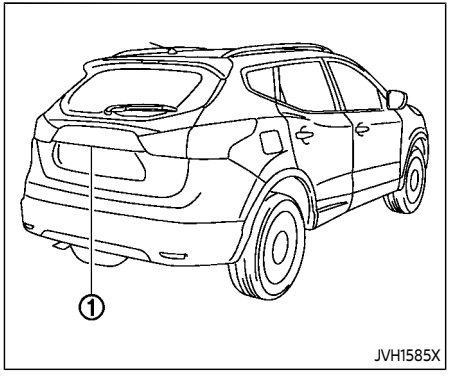

SYSTEM MAINTENANCE

CAUTION

- **Do not use alcohol, benzine or thinner to clean the camera. This will cause discoloration.**
- **Do not damage the camera as the monitor screen may be adversely affected.**

If dirt, rain or snow accumulates on the camera ①, RearView Monitor may not display objects clearly. Clean the camera by wiping it with a cloth dampened with a diluted mild cleaning agent and then wiping it with a dry cloth.

INTELLIGENT AROUND VIEW® MONITOR (if so equipped)

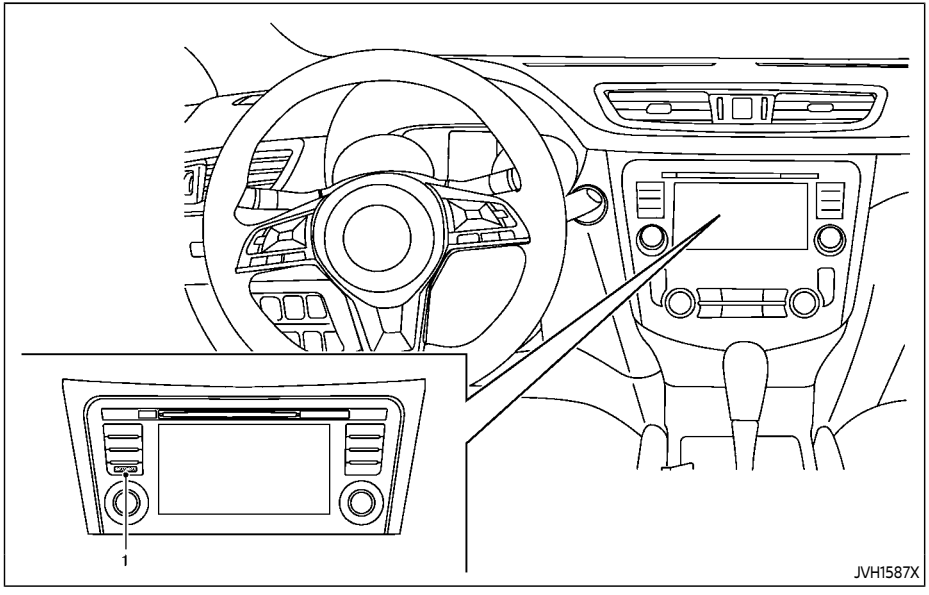

1. CAMERA button

WARNING

- **Failure to follow the warnings and instructions for the proper use of the Intelligent Around View® Monitor system could result in serious injury or death.**
- **The Intelligent Around View® Monitor is a convenience feature and is not a substitute for proper vehicle operation because it has areas where objects cannot be viewed. The four corners of the vehicle in particular, are areas where objects do not always appear in the bird's-eye, front, or rear views. Always check your surroundings to be sure that it is safe to move before operating the vehicle. Always operate the vehicle slowly. Always look out the windows and check mirrors to be sure that it is safe to move.**
- **The driver is always responsible for safety during parking and other maneuvers.**

CAUTION

Do not scratch the lens when cleaning dirt or snow from the front of the camera.

The Intelligent Around View® Monitor system is designed as an aid to the driver in situations such as slot parking or parallel parking.

The monitor displays various views of the position of the vehicle in a split screen format. All views are not available at all times.

Available views:

- Front view
  An approximately 150–degree view of the front of the vehicle.
- Rear view
  An approximately 150–degree view of the rear of the vehicle.
- Bird's-eye view
  The surrounding views of the vehicle from above.
- Front-side view
  The view around and ahead of the front passenger's side wheel.

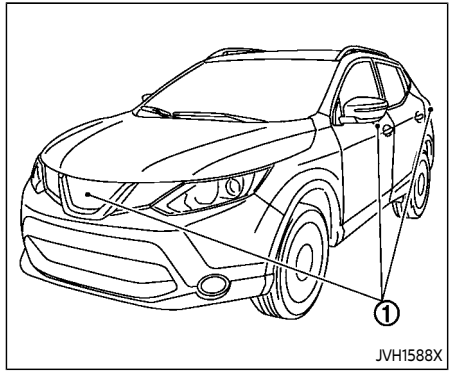

To display the multiple views, the Intelligent Around View® Monitor system uses cameras ① located in the front grille, on the vehicle's outside mirrors and one just above the vehicle's license plate.

INTELLIGENT AROUND VIEW® MONITOR SYSTEM OPERATION

When the ignition switch is placed in the ACC or ON position, push the CAMERA button on the instrument panel or move the shift lever to the R (Reverse) position to operate the Intelligent Around View® Monitor.

The screen displayed on the Intelligent Around View® Monitor will automatically return to the previous screen three minutes after the CAMERA button has been pushed with the shift lever in a position other than the R (Reverse) position.

Available views

WARNING

- **The distance guide lines and the vehicle width lines should be used as a reference only when the vehicle is on a paved, level surface. The distance viewed on the monitor is for reference only and may be different than the actual distance between the vehicle and displayed objects.**
- **Use the displayed lines and the bird's-eye view as a reference. The lines and the bird's-eye view are greatly affected by the number of occupants, fuel level, vehicle position, road condition and road grade.**
- **If the tires are replaced with different sized tires, the predictive course lines and the bird's-eye view may be displayed incorrectly.**
- **When driving the vehicle up a hill, objects viewed in the monitor are**

farther than they appear. When driving the vehicle down a hill, objects viewed in the monitor are closer than they appear.

- **Objects in the monitor will appear visually opposite compared to when viewed in the rearview and outside mirrors.**
- **Use the mirrors or actually look to properly judge distances to other objects.**
- **The distance between objects viewed in the rear view differs from actual distance because a wide-angle lens is used.**
- **On a snow-covered or slippery road, there may be a difference between the predictive course line and the actual course line.**
- **The vehicle width and predictive course lines are wider than the actual width and course.**
- **The displayed lines on the rear view will appear slightly off to the right because the rear view camera is not installed in the rear center of the vehicle.**

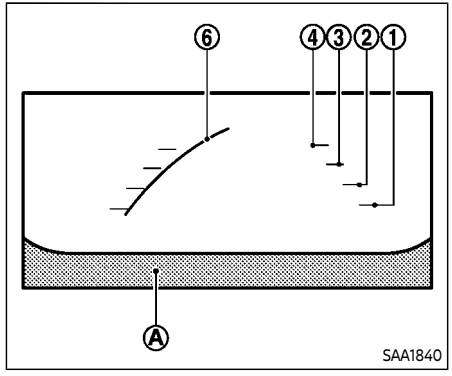

Front view

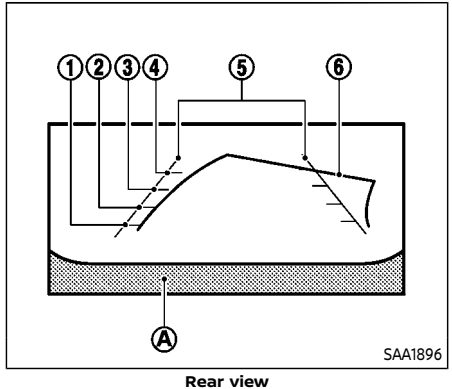

Rear view

Front and rear view:

Guiding lines, which indicate the vehicle width and distances to objects with reference to the vehicle body line Ⓐ , are displayed on the monitor.

Distance guide lines:

Indicate distances from the vehicle body.

- Red line ① : approx. 1.5 ft (0.5 m)
- Yellow line② : approx. 3 ft (1 m)
- Green line③ : approx. 7 ft (2 m)
- Green line④ : approx. 10 ft (3 m)

Vehicle width guide lines ⑤ :

Indicate the vehicle width when backing up.

Predictive course lines ⑥ :

Indicate the predictive course when operating the vehicle. When the monitor displays the rear view, the predictive course lines will be displayed on the monitor if the steering wheel is turned. The predictive course lines will move depending on how much the steering wheel is turned and will not be displayed while the steering wheel is in the straight ahead position.

The front view will not be displayed when the vehicle speed is above 6 MPH (10 km/h).

NOTE:

- **When the monitor displays the front view and the steering wheel turns about 90 degrees or less from the straight ahead position, both the right and left predictive course lines ⑥ are displayed. When the steering wheel turns about 90 degrees or more, the predictive course line is displayed only on the opposite side of the turn.**

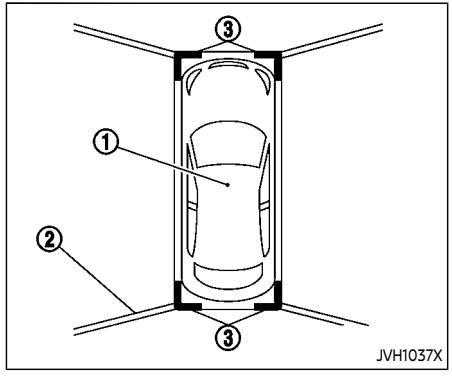

Bird's-eye view:

The bird's-eye view shows the overhead view of the vehicle which helps confirm the vehicle position and the predicted course to a parking space.

The vehicle icon ① shows the position of the vehicle. Note that the distance between objects viewed in the bird's-eye view differs from the actual distance.

The areas that the cameras cannot cover ② are indicated in black.

After the ignition switch is placed in the ACC or ON position, the non-viewable area ② is highlighted in yellow for a few seconds after the bird's-eye view is displayed.

In addition, the non-viewable corners are displayed in red (blinking for the first few seconds) ③ to remind the driver to be cautious.

WARNING

- **Objects in the bird's-eye view will appear farther than the actual distance.**
- **Tall objects, such as a curb or vehicle, may be misaligned or not displayed at the seam of the views.**
- **Objects that are above the camera cannot be displayed.**
- **The view for the bird's-eye view may be misaligned when the camera position alters.**
- **A line on the ground may be misaligned and is not seen as being straight at the seam of the views. The misalignment will increase as the line proceeds away from the vehicle.**

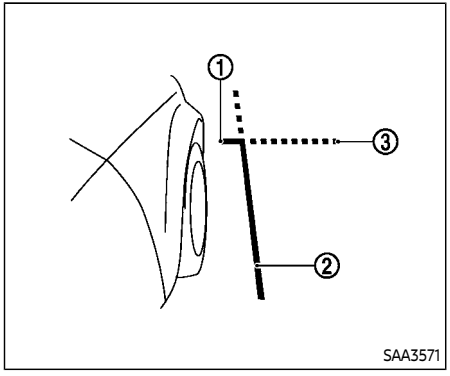

Front-side view:

Guiding lines:

Guiding lines that indicate the approximate width and the front end of the vehicle are displayed on the monitor.

The front-of-vehicle line ① shows the front part of the vehicle.

The side-of-vehicle line ② shows the vehicle width including the outside mirrors.

The extensions ③ of both the front ① and side ② lines are shown with a green dotted line.

DIFFERENCE BETWEEN PREDICTIVE AND ACTUAL DISTANCES

The displayed guidelines and their locations on the ground are for approximate reference only. Objects on uphill or downhill surfaces or projecting objects will be actually located at distances different from those displayed in the monitor relative to the guidelines (refer to illustrations). When in doubt, turn around and view the objects as you are backing up, or park and exit the vehicle to view the positioning of objects behind the vehicle.

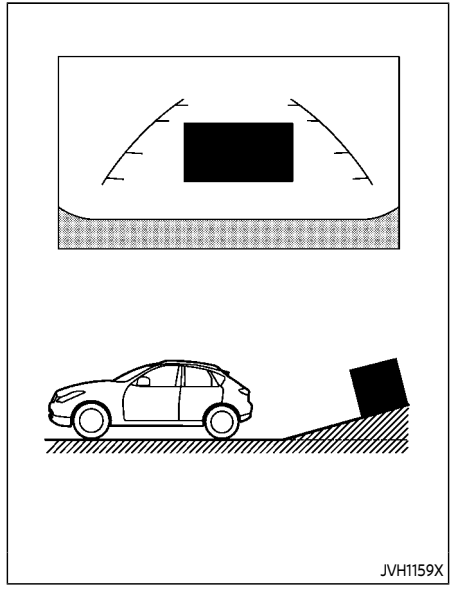

Backing up on a steep uphill

When backing up the vehicle up a hill, the distance guide lines and the vehicle width guide lines are shown closer than the actual distance. Note that any object on the hill is farther than it appears on the monitor.

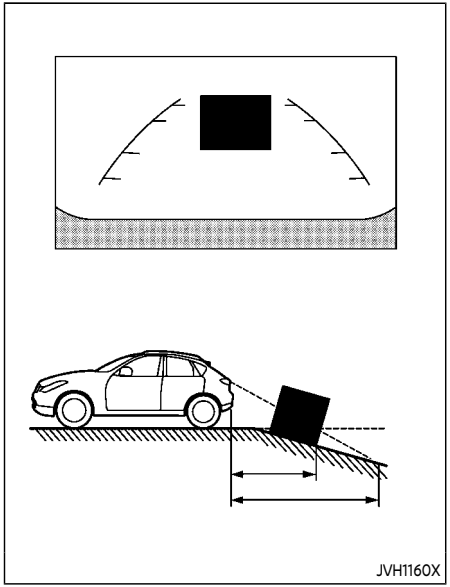

Backing up on a steep downhill

When backing up the vehicle down a hill, the distance guide lines and the vehicle width guide lines are shown farther than the actual distance. Note that any object on the hill is closer than it appears on the monitor.

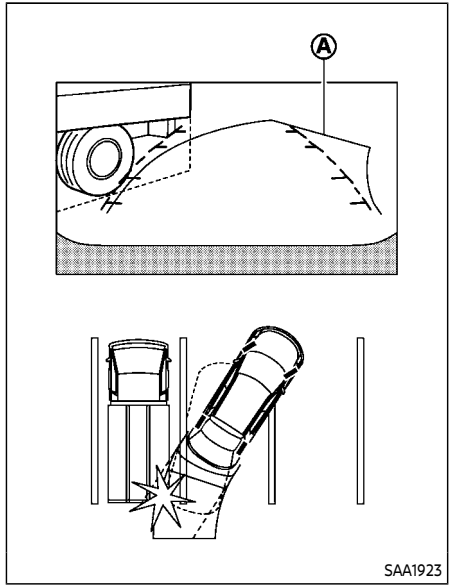

Backing up near a projecting object

The predictive course lines Ⓐ do not touch the object in the display. However, the vehicle may hit the object if it projects over the actual backing up course.

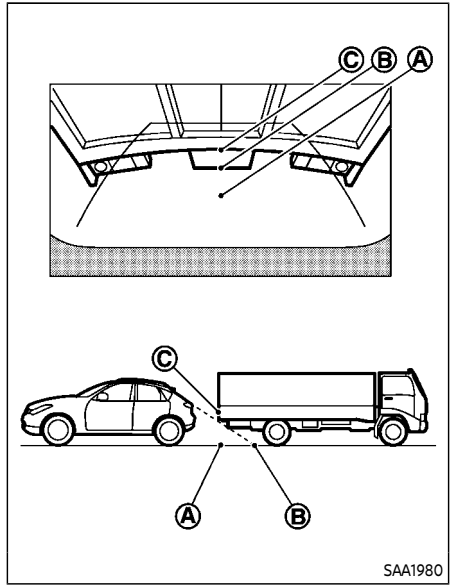

Backing up behind a projecting object

The position Ⓒ is shown farther than the position Ⓑ in the display. However, the position Ⓒ is actually at the same distance as the position Ⓐ. The vehicle may hit the object when backing up to the

position Ⓐ if the object projects over the actual moving course.

HOW TO PARK WITH PREDICTIVE COURSE LINES

WARNING

- **If the tires are replaced with different sized tires, the predictive course lines may be displayed incorrectly.**
- **On a snow-covered or slippery road, there may be a difference between the predictive course line and the actual course line.**

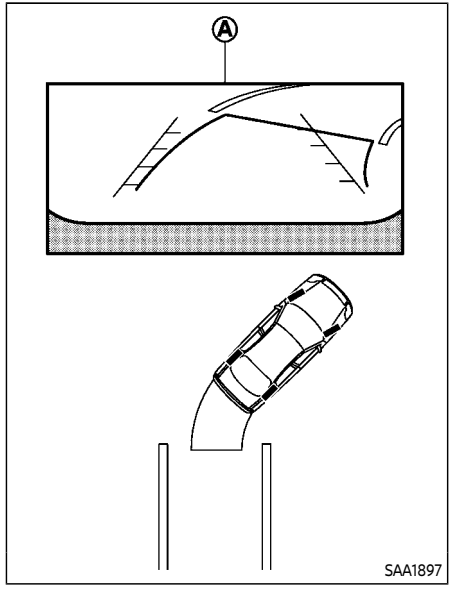

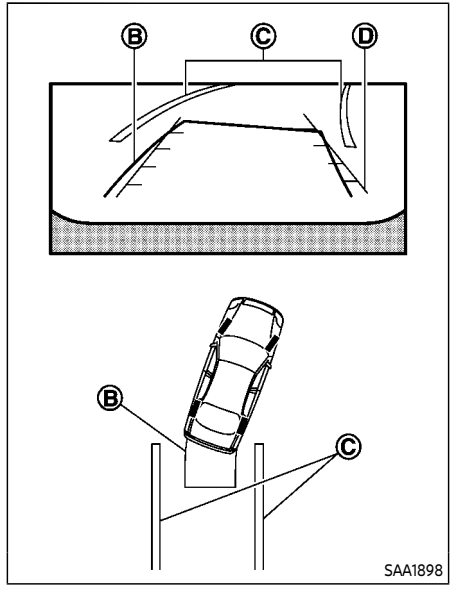

1. Visually check that the parking space is safe before parking your vehicle.
2. The rear view of the vehicle is displayed on the screen Ⓐ when the shift lever is moved to the R (Reverse) position.
3. Slowly back up the vehicle adjusting the steering wheel so that the predictive course lines Ⓑ enter the parking space Ⓒ .
4. Maneuver the steering wheel to make the vehicle width guide lines Ⓓ parallel to the parking space Ⓒ while referring to the predictive course lines.

5. When the vehicle is parked in the space completely, move the shift lever to the P (Park) position and apply the parking brake.

HOW TO SWITCH THE DISPLAY

With the ignition switch placed in the ACC or ON position, push the CAMERA button or move the shift lever to the R (Reverse) position to operate the Intelligent Around View® Monitor.

The Intelligent Around View® Monitor displays different split screen views depending on the position of the shift lever. Push the CAMERA button to switch between the available views.

If the shift lever is in the R (Reverse) position, the available views are:

- Rear view/bird's-eye view split screen
- Rear view/front-side view split screen
- Rear view

If the shift lever is in the P (Park) position, the available views are:

- Front view/bird's-eye view split screen
- Front view/front-side view split screen

The display will switch from the Intelligent Around View® Monitor screen when:

- The shift lever is in the D (Drive) position and the vehicle speed increases above approximately 6 MPH (10 km/h).
- A different screen is selected (when the shift lever is not in the "R" (Reverse) position).

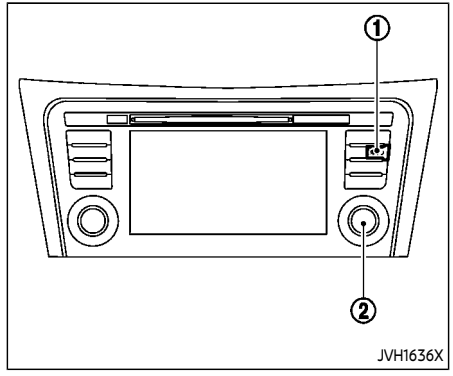

ADJUSTING THE SCREEN

To adjust the screen brightness when the Intelligent Around View® Monitor is displayed, push the ☀/☽ button ①.

Adjust brightness to the preferred setting using the ENTER AUDIO/TUNE·SCROLL dial ②.

The Intelligent Around View® Monitor settings can also be adjusted from "Settings" menu. (See "Displaying settings menu" (P.4-5).)

NOTE:

Do not adjust the display settings of the Intelligent Around View® Monitor while the vehicle is moving. Make sure the

parking brake is firmly applied.

INTELLIGENT AROUND VIEW® MONITOR SYSTEM LIMITATIONS

WARNING

Listed below are the system limitations for Intelligent Around View® Monitor. Failure to operate the vehicle in accordance with these system limitations could result in serious injury or death.

- **Do not use the Intelligent Around View® Monitor with the outside mirrors in the stored position, and make sure that the liftgate is securely closed when operating the vehicle using the Intelligent Around View® Monitor.**
- **The distance between objects viewed on the Intelligent Around View® Monitor differs from the actual distance.**
- **The cameras are installed above the front grille, the outside mirrors and above the rear license plate. Do not put anything on the cameras.**
- **When washing the vehicle with highpressure water, be sure not to spray it around the cameras. Otherwise, water may enter the camera unit causing water condensation on the lens, a malfunction, fire or an electric shock.**
- **Do not strike the cameras. They are precision instruments. Doing so could cause a malfunction or cause damage resulting in a fire or an electric shock.**

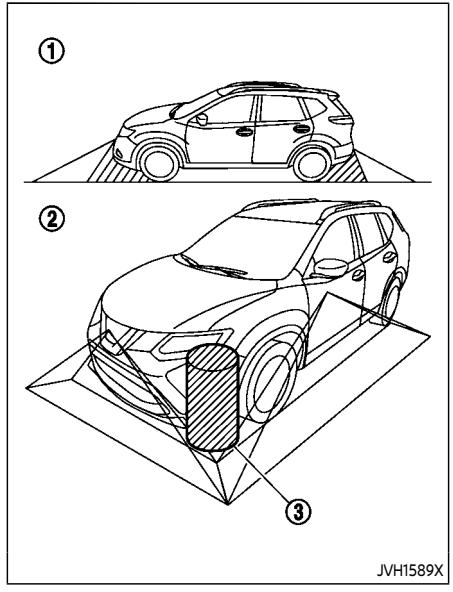

There are some areas where the system will not show objects and the system does not warn of moving objects. When in the front or the rear view display, an object below the bumper or on the ground may not be viewed ①. When in the bird's-eye view, a tall object near the seam ③ of the camera viewing areas will

not appear in the monitor ②.

The following are operating limitations and do not represent a system malfunction:

- When the view is switched, the display images on the screen may be displayed with some delay.
- When the temperature is extremely high or low, the screen may not display objects clearly.
- When strong light is shining directly on the camera, objects may not be displayed clearly.
- The screen may flicker under fluorescent light.
- The colors of objects on the Intelligent Around View® Monitor may differ somewhat from the actual color of objects.
- Objects on the monitor may not be clear and the color of the object may differ in a dark environment.
- There may be differences in sharpness between each camera view of the bird's-eye view.
- Do not use wax on the camera lens. Wipe off any wax with a clean cloth that has been dampened with a mild detergent diluted with water.

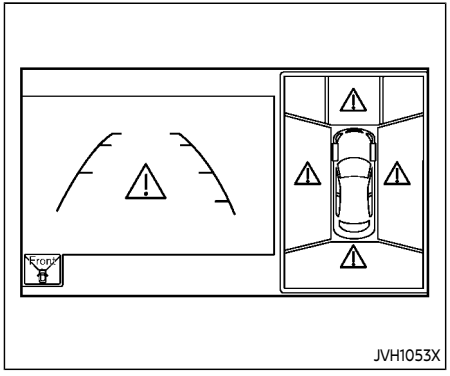

System temporarily unavailable

When the "⚠" icon is displayed on the screen, there will be abnormal conditions in the Intelligent Around View® Monitor. This will not hinder normal driving operation but the system should be inspected. It is recommended you visit a NISSAN dealer.

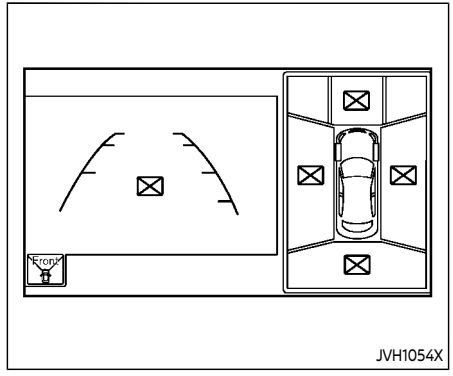

When the "⊠" icon is displayed on the screen, the camera image may be receiving temporary electronic disturbances from surrounding devices. This will not hinder normal driving operation but the system should be inspected. It is recommended you visit a NISSAN dealer.

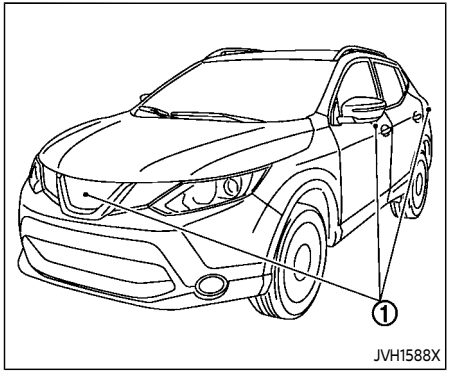

SYSTEM MAINTENANCE

CAUTION

- **Do not use alcohol, benzine or thinner to clean the camera. This will cause discoloration.**
- **Do not damage the camera as the monitor screen may be adversely affected.**

If dirt, rain or snow accumulates on any of the cameras ①, the Intelligent Around View® Monitor may not display objects clearly. Clean the camera by wiping with a cloth dampened with a diluted mild cleaning agent and then wiping with a dry cloth.

MOVING OBJECT DETECTION (MOD) (if so equipped)

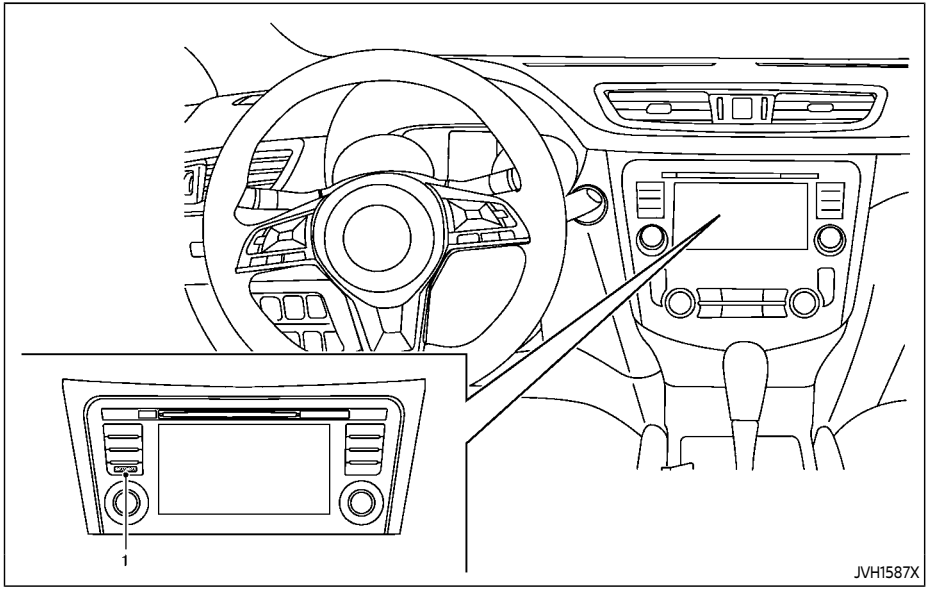

1. CAMERA button

WARNING

- **Failure to follow the warnings and instructions for proper use of the Moving Object Detection system could result in serious injury or death.**
- **The MOD system is not a substitute for proper vehicle operation and is not designed to prevent contact with objects surrounding the vehicle. When maneuvering, always use the outside mirror and rearview mirror and turn and check the surroundings to ensure it is safe to maneuver.**
- **The system is deactivated at speeds above 5 MPH (8 km/h). It is reactivated at lower speeds.**
- **The MOD system is not designed to detect the surrounding stationary objects.**

The MOD system can inform the driver of moving objects near the vehicle when driving out of garages, maneuvering in parking lots and in other such instances.

The MOD system detects moving objects by using image processing technology on the image shown in the display.

MOD SYSTEM OPERATION

The MOD system will turn on automatically under the following conditions:

- When the shift lever is in the R (Reverse) position.
- When the CAMERA button is pushed to switch to the camera view on the display.
- When vehicle speed decreases below approximately 5 MPH (8 km/h).

The MOD system operates in the following conditions when the camera view is

displayed:

- When the shift lever is in the P (Park) or N (Neutral) position and the vehicle is stopped, the MOD system detects the moving objects in the bird's-eye view. The MOD system will not operate if either door is opened. If outside mirrors are folded, MOD may not operate properly.
- When the shift lever is in the D (Drive) position, and the vehicle speed is below approximately 5 MPH (8 km/h), the MOD system detects moving objects in the front view.
- When the shift lever is in the R (Reverse) position and the vehicle speed is below approximately 5 MPH (8 km/h), the MOD system detects moving objects in the rear view. The MOD system will not operate if the liftgate is open.

The MOD system does not detect moving objects in the front-side view. The MOD icon is not displayed on the screen when in this view.

When the MOD system detects a moving object near the vehicle, the yellow frame will be displayed on the view where the object is detected and a chime will sound once. While the MOD system continues to detect moving objects, the yellow frame continues to be displayed.

NOTE:

While the RCTA chime (if so equipped) is beeping, the MOD system does not chime.

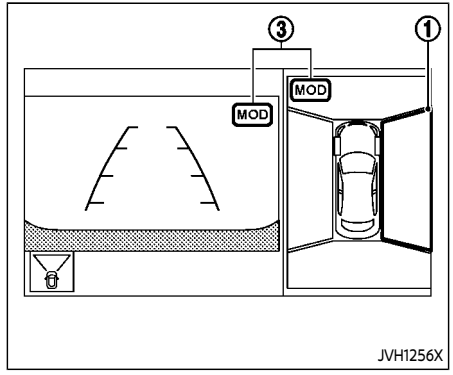

Front and bird's-eye views

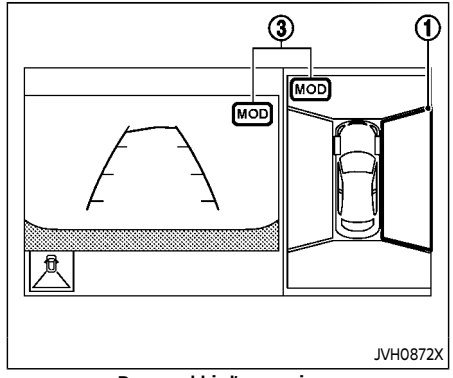

Rear and bird's-eye views

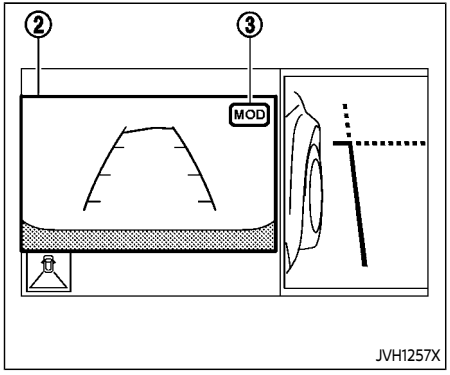

Rear and front-side views

In the bird's-eye view, the yellow frame ① is displayed on each camera image (front, rear, right, left) depending on where moving objects are detected.

The yellow frame ② is displayed on each view in the front view and rear view modes.

A blue MOD icon ③ is displayed in the view where the MOD system is operative. A gray MOD icon ③ is displayed in the view where the MOD system is not operative.

If the MOD system is turned off, the MOD icon ③ is not displayed.

TURNING MOD ON AND OFF

The MOD system can be turned on and off using the vehicle information display. (See "Driver Assistance" (P.2-20).)

MOD SYSTEM LIMITATIONS

WARNING

Listed below are the system limitations for MOD. Failure to operate the vehicle in accordance with these system limitations could result in serious injury or death.

- **Excessive noise (for example, audio system volume or open vehicle window) will interfere with the chime sound, and it may not be heard.**
- **The MOD system performance will be limited according to environmental conditions and surrounding objects such as:**
  - **When there is low contrast between background and the moving objects.**
  - **When there is blinking source of light.**
  - **When strong light such as another vehicle's headlight or sunlight is present.**
  - **When camera orientation is not in its usual position, such as when the outside mirror is folded.**
  - **When there is dirt, water drops or snow on the camera lens.**
  - **When the position of the moving objects in the display is not changed.**
- **The MOD system might detect flowing water droplets on the camera lens, white smoke from the muffler, moving shadows, etc.**
- **The MOD system may not function properly depending on the speed, direction, distance or shape of the moving objects.**
- **If your vehicle sustains damage to the parts where the camera is installed, leaving it misaligned or bent, the sensing zone may be altered and the MOD system may not detect objects properly.**
- **When the temperature is extremely high or low, the screen may not display objects clearly. This is not a malfunction.**

NOTE:

The blue MOD icon will change to orange if one of the following has occurred.

- **When the system is malfunctioning.**
- **When the component temperature reaches a high level (icon will blink).**
- **When the rear view camera has detected a blockage (icon will blink).**

If the icon light continues to illuminate orange, have the MOD system checked. It is recommended that you visit a NISSAN dealer for this service.

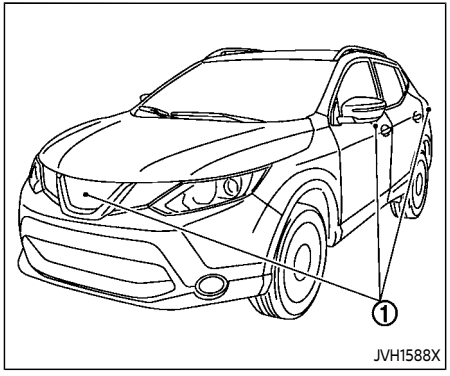

SYSTEM MAINTENANCE

CAUTION

- **Do not use alcohol, benzine or thinner to clean the camera. This will cause discoloration.**
- **Do not damage the camera as the monitor screen may be adversely affected.**

If dirt, rain or snow accumulates on any of the cameras ①, the MOD system may not operate properly. Clean the camera by wiping with a cloth dampened with a diluted mild cleaning agent and then wiping with a dry cloth.

VENTILATORS

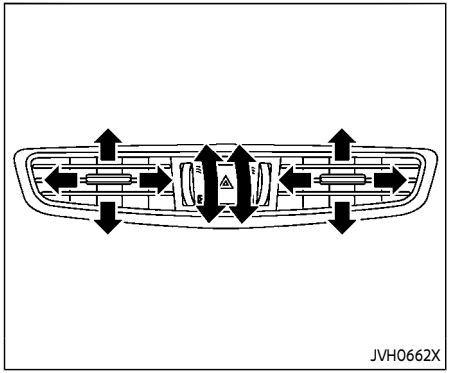

CENTER VENTILATORS

Open/close the ventilators by moving the control to either direction.

≋ : This symbol indicates that the ventilators are open. Moving the control to this direction will open the ventilators.

⊠ : This symbol indicates that the ventilators are closed. Moving the control to this direction will close the ventilators.

Adjust the air flow direction of the ventilators by moving the center knob (up/down, left/right) until the desired position is achieved.

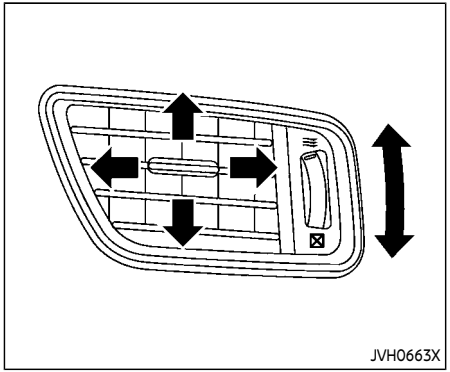

SIDE VENTILATORS

Open/close the ventilators by moving the control to either direction.

≋ : This symbol indicates that the ventilators are open. Moving the control to this direction will open the ventilators.

⊠ : This symbol indicates that the ventilators are closed. Moving the control to this direction will close the ventilators.

Adjust the air flow direction of the ventilators by moving the center knob (up/down, left/right) until the desired position is achieved.

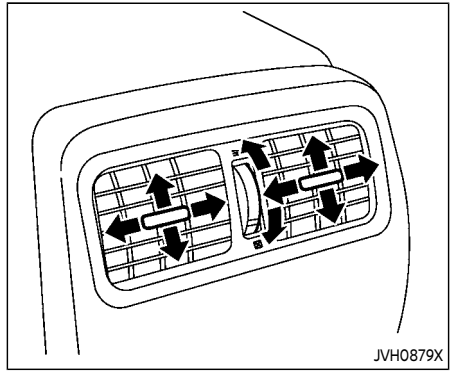

REAR VENTILATORS (if so equipped)

Open/close the ventilators by moving the control to either direction.

≋ : This symbol indicates that the ventilators are open. Moving the side control to this direction will open the ventilators.

⊠ : This symbol indicates that the ventilators are closed. Moving the side control to this direction will close the ventilators.

Adjust the air flow direction of the ventilators by moving the center knob (up/down, left/right) until the desired position is achieved.

WARNING

- **The heater and air conditioner operate only when the engine is running.**
- **Never leave children or adults who would normally require the support of others alone in the vehicle. Pets should not be left alone either. They could unknowingly activate switches or controls and inadvertently become involved in a serious accident and injure themselves. On hot, sunny days, temperatures in a closed vehicle could quickly become high enough to cause severe or possibly fatal injuries to people or animals.**
- **Do not use the recirculation mode for long periods as it may cause the interior air to become stale and the windows to fog up.**
- **Do not adjust the heating and air conditioning controls while driving so that full attention may be given to vehicle operation.**

The heater and air conditioner operate when the engine is running. The air blower will operate even if the engine is turned off and the ignition switch is placed in the ON position.

NOTE:

- **Odors from inside and outside the vehicle can build up in the air conditioner unit. Odor can enter the passenger compartment through the ventilators.**
- **When parking, set the heater and air conditioner controls to turn off air recirculation to allow fresh air into the passenger compartment. This should help reduce odors inside the vehicle.**

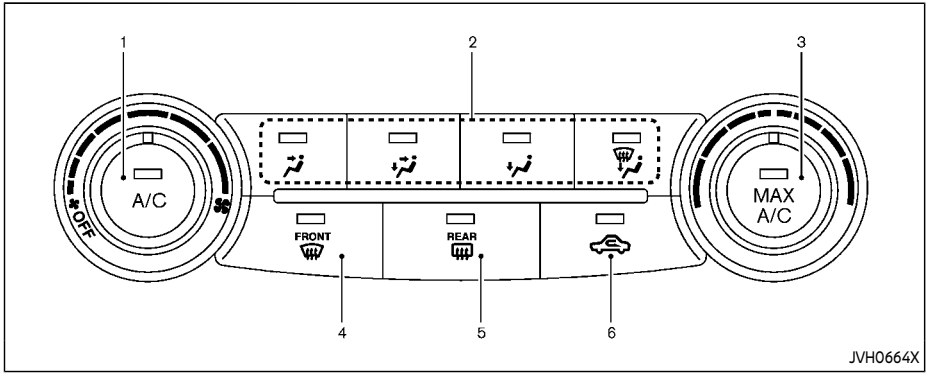

1. A/C button/Fan speed control dial
2. Air flow control buttons
3. MAX A/C button/Temperature control dial
4. Front defroster button
5. Rear defroster button (See "Rear window and outside mirror defroster switch" (P.2-42).)
6. Air recirculation button

MANUAL AIR CONDITIONER AND HEATER

Controls

Turning system on/off:

To turn on the system, turn the fan speed control dial out of the OFF position. Turn the dial counterclockwise to the OFF position to turn off the system.

Fan speed control:

Turn the fan speed control dial clockwise to increase the fan speed.

Turn the fan speed control dial counterclockwise to decrease the fan speed.

Temperature control:

Turn the temperature control dial to set the desired temperature. Turn the dial between the middle and the right position to select the hot temperature. Turn the dial between the middle and the left position to select the cool temperature.

Air flow control:

Push one of the air flow control buttons to select the air flow outlets.

- — Air flows mainly from center and side ventilators.
- — Air flows mainly from center and side ventilators and foot outlets.
- — Air flows mainly from the foot outlet and partly from the defroster.
- — Air flows mainly from the defroster and foot outlets.

Air intake control:

The air intake control mode will change each time the air recirculation button is pushed.

- When the indicator light is turned on, the air recirculates inside the vehicle.
- When the indicator light is turned off, the air flow is drawn from outside the vehicle.

A/C (Air Conditioner) operation:

Push the A/C button to turn on or off the air conditioner. When the air conditioner is on, the A/C indicator light on the button illuminates.

MAX A/C (Quick Air Conditioning) operation:

Push the MAX A/C button for maximum cooling and dehumidifying.

When the MAX A/C mode is turned on, the air flow mode indicator will turn off with the air flow mode fixed at .

At the same time, the indicator light on the A/C button and the air recirculation mode will turn on.

Push the MAX A/C button again to turn off the MAX A/C mode. When the MAX A/C mode is turned off, most of the settings will return to the previous state, while the indicator light on the A/C button will stay on.

Heater operation

Heating:

This mode is used to direct heated air from the foot outlets. Some air also flows from the defroster outlets and the side ventilator outlets.

1. Push the air recirculation button for normal heating. (The indicator light will turn off.)
2. Push the button. (The indicator light will turn on.)
3. Turn the fan speed control dial to the desired position.
4. Turn the temperature control dial to the desired position between the middle and the hot (right) position.

Ventilation:

This mode directs outside air from the side and center ventilators.

1. Push the air recirculation button. (The indicator light will turn off.)
2. Push the button. (The indicator light will turn on.)
3. Turn the fan speed control dial to the desired position.
4. Turn the temperature control dial to the desired position.

Defrosting or defogging:

This mode directs the air to the defroster outlets to defrost/defog the windows.

1. Push the front defroster button. (The indicator light will turn on.)
2. Turn the fan speed control dial to the desired position.
3. Turn the temperature control dial to the desired position between the middle and the hot (right) position.

   To remove frost from the windshield quickly, turn the temperature control dial to the maximum hot (right) position and the fan speed control dial to the maximum position.

   When the front defroster mode is selected, the air conditioner automatically turns on if the outside temperature is more than 36°F (2°C). This dehumidifies the air which helps defog the windshield. The air recirculation indicator automatically turns off, allowing outside air to be drawn into the passenger compartment to further improve the defogging performance. The recirculation mode cannot be activated in the front defroster mode.

Bi-level heating:

The bi-level mode directs warmed air to the side and center ventilators and to the front and rear floor outlets.

1. Push the air recirculation button. (The indicator light will turn off.)
2. Push the button. (The indicator light will turn on.)
3. Turn the fan speed control dial to the desired position.
4. Turn the temperature control dial to the desired position.

Heating and defogging:

This mode heats the interior and defogs the windows.

1. Push the button. (The indicator light will turn on.)
2. Turn the fan speed control dial to the desired position.
3. Turn the temperature control dial to the maximum hot (right) position.

When the button is pushed, the air conditioner automatically turns on if the outside temperature is more than 36°F (2°C). This dehumidifies the air which helps defog the windshield. The air recirculation indicator automatically turns off, allowing outside air to be drawn into the passenger compartment to further improve the defogging performance.

NOTE:

Clear snow and ice from the wiper blades and air inlet in front of the windshield. This improves heater operation.

Air conditioner operation

Start the engine, turn the fan speed control dial to the desired position, and push the A/C button to activate the air conditioner. When the air conditioner is on, cooling and dehumidifying functions are added to the heater operation. The air conditioner cooling function operates only when the engine is running.

Cooling:

This mode is used to cool and dehumidify the air.

1. Push the button. (The indicator light will turn on.)
2. Turn the fan speed control dial to the desired position.
3. Push the A/C button. (The indicator light will turn on.)
4. Turn the temperature control dial to the desired position between the middle and the cool (left) position.

For quick cooling, push the MAX A/C button. When the MAX A/C button is pushed, it will activate the air recirculation mode. The amount of air coming through the ventilators is the highest it can go when in MAX A/C mode regardless of the position of the fan speed control dial.

Dehumidified heating:

This mode is used to heat and dehumidify the air.

1. Push the air recirculation button. (The indicator light will turn off.)
2. Push the button. (The indicator light will turn on.)
3. Turn the fan speed control dial to the desired position.
4. Push the A/C button on. (The indicator light will turn on.)
5. Turn the temperature control dial to the desired position between the middle and the hot (right) position.

Dehumidified defogging:

This mode is used to defog the windows and dehumidify the air.

1. Push the front defroster button. (The indicator light will turn on.)
2. Turn the fan speed control dial to the desired position.
3. Turn the temperature control dial to the desired position.

When the front defroster or mode is

selected, the air conditioner automatically turns on if the outside temperature is more than 36°F (2°C). This dehumidifies the air which helps defog the windshield. The air recirculation mode automatically turns off, allowing outside air to be drawn into the passenger compartment to further improve the defogging performance.

The air conditioner is always on in front defroster or mode, regardless of whether the indicator light is on or off.

NOTE:

- **The air conditioner system should be operated for approximately 10 minutes at least once a month. This helps prevent damage to the air conditioner system due to the lack of lubrication.**
- **A visible mist may be seen coming from the ventilators in hot, humid conditions as the air is cooled rapidly. This does not indicate a malfunction.**
- **If the engine coolant temperature becomes too high, the air recirculation mode will be activated and the indicator light will come on automatically.**
- **If the engine coolant temperature gauge indicates engine coolant temperature over the normal range, turn the air conditioner off. (See "If your vehicle overheats" (P.6-11).)**

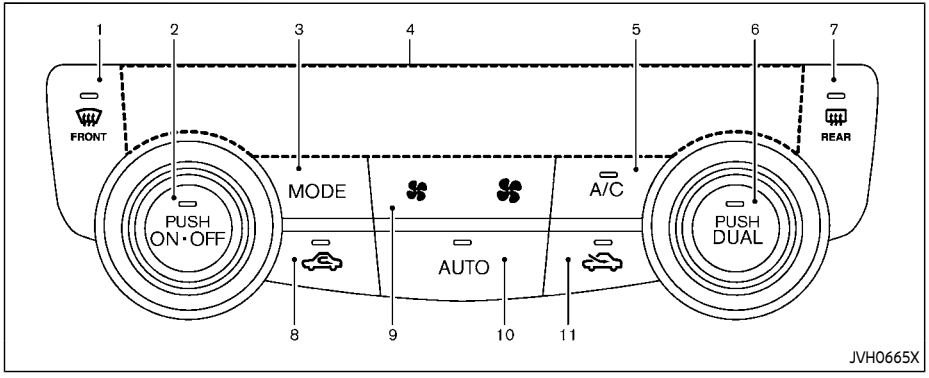

1. Front defroster button
2. ON·OFF button/Temperature control dial (driver side)
3. MODE button
4. Display screen
5. A/C (Air Conditioner) button
6. DUAL button/Temperature control dial (passenger side)
7. Rear defroster button (See "Rear window and outside mirror defroster switch" (P.2-42).)
8. Air recirculation button
9. Fan speed control button
10. AUTO button
11. Outside air circulation button

AUTOMATIC AIR CONDITIONER AND HEATER

Automatic operation (AUTO)

The AUTO mode may be used year-round as the system automatically controls the air conditioner to a constant temperature, air flow distribution and fan speed after the desired temperature is set manually.

Cooling and dehumidified heating:

1. Push the AUTO button (the indicator light will turn on).
2. Turn the temperature control dial to set the desired temperature.

- When the DUAL indicator light is not illuminated, pushing the DUAL button (the indicator light will turn on) allows the user to independently change the driver and passenger side temperatures with the corresponding temperature control dial.
- To cancel the separate temperature setting, push the DUAL button (the indicator light will turn off) and the driver's side temperature setting will be applied to both the driver and passenger sides.

The temperature of the passenger compartment will be maintained automatically. Air flow distribution and fan speed are also controlled automatically.

A visible mist may be seen coming from the ventilators in hot and humid conditions as the air is cooled rapidly. This does not indicate a malfunction.

Dehumidified defrosting/defogging:

1. Push the front defroster button (The indicator light on the front defroster button will illuminate).
2. Turn the temperature control dial to set the desired temperature.

- To quickly remove frost from the outside surface of the windshield, set the temperature and the fan speed to the

maximum levels.

- After the windshield is cleared, push the AUTO button (the AUTO indicator light will turn on).
- When the front defroster button is pushed, the air conditioner will turn on when the outside air temperature is above approximately 36°F (2°C) to defog the windshield. The air recirculation mode will automatically turn off. The outside air circulation mode will be selected to improve the defogging performance.

Do not set the temperature too low when the front defroster mode is on (the indicator light is illuminated), because doing so may fog up the windshield.

Manual operation

The manual mode can be used to control the heater and air conditioner to your desired settings.

Fan speed control:

Push the fan speed control button (side or side) to manually control the fan speed.

Push the AUTO button to change the fan speed to the automatic mode.

Air flow control:

Push the MODE button to select the desired mode:

— Air flows mainly from the center and side ventilators.

— Air flows mainly from the center and side ventilators and foot outlets.

— Air flows mainly from the foot outlet and partly from the defroster.

— Air flows mainly from the front defroster outlets and foot outlets.

Temperature control:

Turn the temperature control dial to set the desired temperature.

- When the DUAL indicator light is not illuminated, pushing the DUAL button (the indicator light will turn on) allows the user to independently change the driver and passenger side temperatures with the corresponding temperature control dial.

  Also turning the passenger's side temperature control dial changes only the front passenger's side temperature. (The DUAL indicator light will illuminate and DUAL will appear on the display.)
- To cancel the separate temperature setting, push the DUAL button (the indicator light will turn off) and the driver's side temperature setting will be applied to both the driver and passenger sides.

Air intake control:

- Push the air recirculation button to recirculate interior air inside the vehicle. The indicator light on the button will come on.

  The air recirculation cannot be activated when the air conditioner is in the front defrosting mode.
- Push the outside air circulation button to draw outside air into the passenger compartment. The indicator light on the button will come on.
- To control the air intake automatically, push and hold either the air recirculation button or the outside air circulation button (whichever button with the indicator light illuminated). The indicator lights (both air recirculation and outside air circulation buttons) will flash twice, and then the air intake will switch to automatic control. When the automatic control is set, the system automatically alternates between the outside air circulation and the air recirculation modes. (The indicator light of the active mode will turn on.)

NOTE:

Even if the system is manually set to the air recirculation mode, when both outside temperature and coolant temperature are low, the system may

automatically switch to the outside air circulation mode.

To turn the system off:

To turn off the heater and air conditioner, push the ON·OFF button.

Push the ON·OFF button again, the system will turn on in the mode which was used immediately before the system was turned off.

Remote engine start logic (if so equipped)

When the remote engine start function is activated, the vehicles equipped with the automatic air conditioner and heater may go into automatic heating or cooling mode depending on the outside and cabin temperatures. During this period, the display and the buttons will be inoperable until the ignition switch is placed in the ON position. When the temperature is low, the rear defroster and the heated steering wheel (if so equipped) may also be activated automatically with the activation of the remote engine start function. (See "Remote engine start" (P.3-22).)

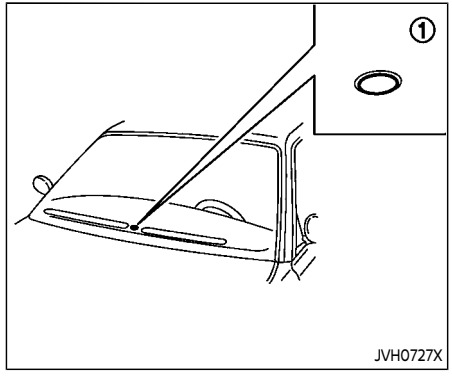

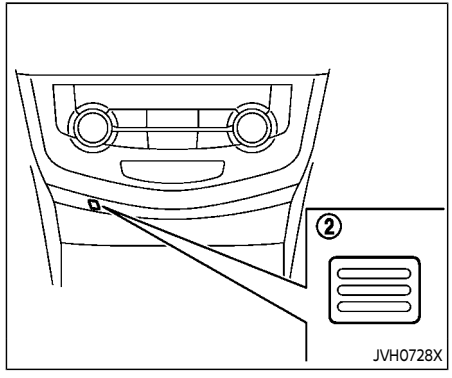

OPERATING TIPS (for automatic air conditioner)

When the engine coolant temperature and outside air temperature are low, the air flow from the foot outlets may not operate for a maximum of 150 seconds. However, this is not a malfunction. After the coolant temperature warms up, air flow from the foot outlets will operate normally.

The sensors ① and ②, located on the instrument panel, help maintain a constant temperature. Do not put anything on or around the sensors.

SERVICING AIR CONDITIONER

WARNING

The air conditioner system contains refrigerant under high pressure. To avoid personal injury, any air conditioner service should be done only by an experienced technician with the proper equipment.

The air conditioner system in your vehicle is charged with a refrigerant designed with the environment in mind.

This refrigerant will not harm the earth's ozone layer. However, it may

contribute in a small part to global warming.

Special charging equipment and lubricant are required when servicing your vehicle's air conditioner. Using improper refrigerants or lubricants will cause severe damage to the air conditioner system. (See "Air conditioning system refrigerant and lubricant recommendations" (P.10-6).)

A NISSAN dealer will be able to service your environmentally friendly air conditioner system.

In-cabin microfilter

The air conditioner system is equipped with an in-cabin microfilter. To make sure the air conditioner heats, defogs, and ventilates efficiently, replace the filter according the specified maintenance intervals listed in the "9. Maintenance and schedules" section. It is recommended to visit a NISSAN dealer to replace the filter.

The filter should be replaced if the air flow decreases significantly or if windows fog up easily when operating the heater or air conditioner.

AUDIO OPERATION PRECAUTIONS

Radio

Place the ignition switch in the ACC or ON position and push the FM·AM button to turn on the radio. If you listen to the radio with the engine not running, the ignition switch should be placed in the ACC position.

Radio reception is affected by station signal strength, distance from radio transmitter, buildings, bridges, mountains and other external influences. Intermittent changes in reception quality normally are caused by these external influences.

Using a cellular phone in or near the vehicle may influence radio reception quality.

Radio reception:

Your vehicle radio system is equipped with state-of-the-art electronic circuits to enhance radio reception. These circuits are designed to extend reception range, and to enhance the quality of that reception.

However there are some general characteristics of both FM and AM radio signals that can affect radio reception quality in a moving vehicle, even when the finest equipment is used. These characteristics are completely normal in a given reception area, and do not indicate any malfunction in your vehicle radio system.

Reception conditions will constantly change because of vehicle movement. Buildings, terrain, signal distance and interference from other vehicles can work against ideal reception. Described below are some of the factors that can affect your radio reception.

Some cellular phones or other devices may cause interference or a buzzing noise to come from the audio system speakers. Storing the device in a different location may reduce or eliminate the noise.

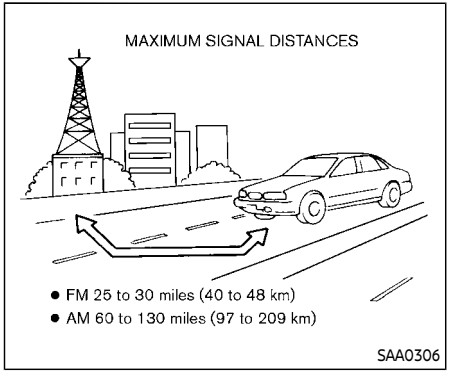

FM radio reception:

Range: FM range is normally limited to 25 to 30 miles (40 to 48 km), with monaural (single station) FM having slightly more range than stereo FM. External influences may sometimes interfere with FM station reception even if the FM station is within 25 miles (40 km). The strength of the FM signal is directly related to the distance between the transmitter and receiver. FM signals follow a line-of-sight path, exhibiting many of the same characteristics as light. For example they will reflect off objects.

Fade and drift: As your vehicle moves away from a station transmitter, the signals will tend to fade and/or drift.

Static and flutter: During signal interference from buildings, large hills or due to antenna position, usually in conjunction with increased distance from the station transmitter, static or flutter can be heard. This can be reduced by lowering the treble setting to reduce the treble response.

Multipath reception: Because of the reflective characteristics of FM signals, direct and reflected signals reach the receiver at the same time. The signals may cancel each other, resulting in momentary flutter or loss of sound.

AM radio reception:

AM signals, because of their low frequency, can bend around objects and skip along the ground. In addition, the signals can be bounced off the ionosphere and bent back to earth. Because of these characteristics. AM signals are also subject to interference as they travel from transmitter to receiver.

Fading: Occurs while the vehicle is passing through freeway underpasses or in areas with many tall buildings. It can also occur for several seconds during ionospheric turbulence even in areas where no obstacles exist.

Static: Caused by thunderstorms, electrical power lines, electric signs and even traffic lights.

Satellite radio reception (if so equipped):

When the satellite radio is used for the first time or the battery has been replaced, the satellite radio may not work properly. This is not a malfunction. Wait more than 10 minutes with the satellite radio ON and the vehicle away from any metal or large buildings for the satellite radio to receive all of the necessary data.

The satellite radio mode requires an active SiriusXM Satellite Radio subscription. The satellite radio is not available in Alaska, Hawaii and Guam.

Satellite radio performance may be affected if cargo carried on the roof blocks the satellite radio signal.

If possible, do not put cargo near the satellite antenna.

A buildup of ice on the satellite radio antenna can affect satellite radio performance. Remove the ice to restore satellite radio reception.

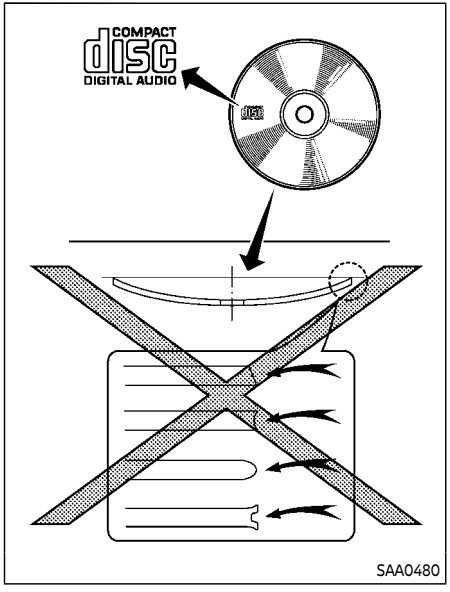

Compact Disc (CD) player

- **Do not force a Compact Disc (CD) into the CD insert slot. This could damage the CD and/or CD player.**
- **During cold weather or rainy days, the player may malfunction due to the humidity. If this occurs, remove the CD and dehumidify or ventilate the player completely.**
- **The player may skip while driving on rough roads.**
- **The CD player sometimes cannot function when the passenger compartment temperature is extremely high. Decrease the temperature before use.**
- **Only use high quality 4.7 in (12 cm) round discs that have the "COMPACT disc DIGITAL AUDIO" logo on the disc or packaging.**
- **Do not expose the CD to direct sunlight.**
- **CDs that are of poor quality, dirty, scratched, covered with fingerprints, or that have pin holes may not work properly.**
- **The following CDs may not work properly:**
  - **Copy Control Compact Discs (CCCD)**
  - **Recordable Compact Discs (CD-R)**
  - **Rewritable Compact Discs (CD-RW)**
- **Do not use the following CDs as they may cause the CD player to malfunction.**
  - **3.1 in (8 cm) discs**
  - **CDs that are not round**
  - **CDs with a paper label**
  - **CDs that are warped, scratched, or have abnormal edges**
- **This audio system can only play prerecorded CDs. It has no capabilities to record or burn CDs.**
- **If the CD cannot be played, error messages as the following examples will be displayed.**

  Check Disc:
  - **Confirm that the CD is inserted correctly (the label side is facing up, etc.).**
  - **Confirm that the CD is not bent or warped and it is free of scratches.**

  Push Eject:

  This is an error due to the temperature inside the player is too high. Remove the CD by pushing the ⏏ (CD eject) button, and after a short time reinsert the CD. The CD can be played when the temperature of the player returns to normal.

  Unplayable Track:

  The file is unplayable in this audio system (only MP3 or WMA CD).

USB (Universal Serial Bus) Connection Port

WARNING

Do not connect, disconnect or operate the USB device while driving. Doing so can be a distraction. If distracted you could lose control of your vehicle and cause an accident or serious injury.

CAUTION

- **Do not force the USB device into the USB connection port. Inserting the USB device tilted or upside-down into the port may damage the port. Make sure that the USB device is connected correctly into the USB connection port.**
- **Do not grab the USB connection port cover (if so equipped) when pulling the USB device out of the port. This could damage the port and the cover.**
- **Do not leave the USB cable in a place where it can be pulled unintentionally. Pulling the cable may damage the port.**

The vehicle is not equipped with a USB device. USB devices should be purchased separately as necessary.

This system cannot be used to format USB devices. To format a USB device, use a personal computer.

In some states/area, the USB device for the front seats plays only sound without images for regulatory reasons, even when the vehicle is parked.

This system supports various USB memory devices, USB hard drives and iPod® players. Some USB devices may not be supported by this system.

- Partitioned USB devices may not be played correctly.
- Some characters used in other languages (Chinese, Japanese, etc.) are not displayed properly on display. Using English language characters with a USB device is recommended.

General notes for USB use:

Refer to your device manufacturer's owner information regarding the proper use and care of the device.

Notes for iPod® use:

"Made for iPod®", "Made for iPhone®", and "Made for iPad®" mean that an electronic accessory has been designed to connect specifically to iPod®, iPhone®, or iPad®, respectively, and has been certified by the developer to meet Apple performance standards.

Apple is not responsible for the operation of this device or its compliance with safety and regulatory standards.

Please note that the use of this accessory with iPod®, iPhone®, or iPad® may affect wireless performance.

iPad®, iPhone®, iPod®, iPod classic®, iPod nano®, iPod shuffle®, and iPod touch® are trademarks of Apple Inc., registered in the U.S. and other countries. Lightning is a trademark of Apple Inc.

- Improperly plugging in the iPod® may cause a checkmark to be displayed on and off (flickering). Always make sure that the iPod® is connected properly.
- An iPod nano® (1st Generation) may remain in fast forward or rewind mode if it is connected during a seek operation. In this case, please manually reset the iPod®.
- An iPod nano® (2nd Generation) will continue to fast-forward or rewind if it is disconnected during a seek opera-

tion.

- An incorrect song title may appear when the Play Mode is changed while using an iPod nano® (2nd Generation)
- Audiobooks may not play in the same order as they appear on an iPod®.
- Large video files cause slow responses in an iPod®. The display may momentarily black out, but will soon recover.
- If an iPod® automatically selects large video files while in the shuffle mode, the display may momentarily black out, but will soon recover.

Compressed Audio Files (MP3/WMA)

Explanation of terms:

- MP3 — MP3 is short for Moving Pictures Experts Group Audio Layer 3. MP3 is the most well known compressed digital audio file format. This format allows for near "CD quality" sound, but at a fraction of the size of normal audio files. MP3 conversion of an audio track can reduce the file size by approximately a 10:1 ratio (Sampling: 44.1 kHz, Bit rate: 128 kbps) with virtually no perceptible loss in quality. The compression reduces certain parts of sound that seem inaudible to most people.
- WMA — Windows Media Audio (WMA) is a compressed audio format created by Microsoft as an alternative to MP3. The WMA codec offers greater file compression than the MP3 codec, enabling storage of more digital audio tracks in the same amount of space when compared to MP3s at the same level of quality.

  This product is protected by certain intellectual property rights of Microsoft Corporation and third parties. Use or distribution of such technology outside of this product is prohibited without a license from Microsoft or an authorized Microsoft subsidiary and third parties.
- Bit rate — Bit rate denotes the number of bits per second used by a digital music file. The size and quality of a compressed digital audio file is determined by the bit rate used when encoding the file.
- Sampling frequency — Sampling frequency is the rate at which the samples of a signal are converted from analog to digital (A/D conversion) per second.
- Multisession — Multisession is one of the methods for writing data to media. Writing data once to the media is called a single session, and writing more than once is called a multisession.
- ID3/WMA Tag — The ID3/WMA tag is the part of the encoded MP3 or WMA file that contains information about the digital music file such as song title, artist, album title, encoding bit rate, track time duration, etc. ID3 tag information is displayed on the Album/Artist/Track title line on the display.

* Windows® and Windows Media® are registered trademarks or trademarks of Microsoft Corporation in the United States of America and/or other countries.

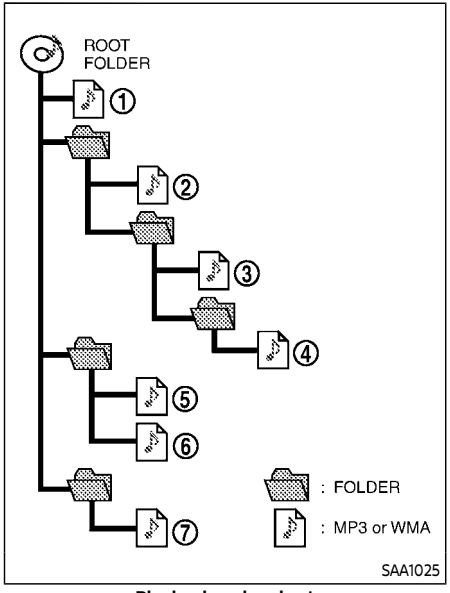

Playback order chart

Playback order:

Music playback order of a CD with MP3 or WMA files is as illustrated.

- The names of folders not containing MP3 or WMA files are not shown in the display.
- If there is a file in the top level of the disc, “Root Folder” is displayed.
- The playback order is the order in which the files were written by the writing software. Therefore, the files might not play in the desired order.

Specification chart (for models without navigation system):

Supported media			CD, CD-R, CD-RW, USB2.0
Supported file systems			CD, CD-R, CD-RW: ISO9660 LEVEL1, ISO9660 LEVEL2, Romeo, Joliet * ISO9660 Level 3 (packet writing) is not supported. * Files saved using the Live File System component (on a Windows Vista-based computer) are not supported.
			USB memory: FAT16, FAT32
Supported versions*1	MP3	Version	MPEG1 Audio Layer 3
		Sampling frequency	32 kHz - 48 kHz
		Bit rate	32 kbps - 320 kbps, VBR*4
	WMA*2	Version	WMA7, WMA8, WMA9
		Sampling frequency	32 kHz - 48 kHz
		Bit rate	32 kbps - 192 kbps, VBR4, 32 kbps - 320 kbps (WMA9 only)
Tag information (Song title and Artist name)			ID3 tag VER1.0, VER1.1, VER2.2, VER2.3, VER2.4 (MP3 only)
			WMA tag (WMA only)
Folder levels		CD, CD-R, CD-RW	Folder levels: 8, Folders: 255, Files: 999 (Max. 255 files for one folder)
		USB	Folder levels: 8, Folders 255, Files: 2500 (Max. 255 files for one folder) Memory size: 4GB
Displayable character codes*3			01: ASCII, 02: ISO-8859-1, 03: UNICODE (UTF-16 BOM Big Endian), 04: UNICODE (UTF-16 Non-BOM Big Endian), 05: UNICODE (UTF-8)

*1 Files created with a combination of 48 kHz sampling frequency and 64 kbps bit rate cannot be played.
*2 Protected WMA files (DRM) cannot be played.
*3 Available codes depend on what kind of media, versions and information are going to be displayed.
*4 When VBR files are played, the playback time may not be displayed correctly.

Specification chart (for models with navigation system):

Supported media			CD, CD-R, CD-RW
Supported file systems			ISO9660 LEVEL1, ISO9660 LEVEL2, Apple ISO, Romeo, Joliet * ISO9660 Level 3 (packet writing) is not supported.
Supported versions*1	MP3	Version	MPEG1, MPEG2, MPEG2.5
		Sampling frequency	8 kHz - 48 kHz
		Bit rate	8 kbps - 320 kbps, VBR
	WMA*2	Version	WMA7, WMA8, WMA9
		Sampling frequency	32 kHz - 48 kHz
		Bit rate	48 kbps - 192 kbps, VBR
Tag information			ID3 tag VER1.0, VER1.1, VER2.2, VER2.3 (MP3 only)
Folder levels			Folder levels: 8, Max folders: 255 (including root folder), Files: 512 (Max. 255 files for one folder)
Text character number limitation			128 characters
Displayable character codes*3			01: ASCII, 02: ISO-8859-1, 03: UNICODE (UTF-16 BOM Big Endian), 04: UNICODE (UTF-16 Non-BOM Big Endian), 05: UNICODE (UTF-8), 06: UNICODE (Non-UTF-16 BOM Little Endian)

*1 Files created with a combination of 48 kHz sampling frequency and 64 kbps bit rate cannot be played.

*2 Protected WMA files (DRM) cannot be played.

*3 Available codes depend on what kind of media, versions and information are going to be displayed.

Troubleshooting guide:

Symptom	Cause and Countermeasure
Cannot play	Check if the disc or USB device was inserted correctly.
	Check if the disc is scratched or dirty.
	Check if there is condensation inside the player. If there is, wait until the condensation is gone (about one hour) before using the player.
	If there is a temperature increase error, the CD player will play correctly after it returns to the normal temperature.
	If there is a mixture of music CD files (CD-DA data) and MP3/WMA files on a CD, only the music CD files (CD-DA data) will be played.
	Files with extensions other than ".MP3", ".WMA", ".mp3" or ".wma" cannot be played. In addition, the character codes and number of characters for folder names and file names should be in compliance with the specifications.
	Check if the finalization process, such as session close and disc close, is done for the disc.
	Check if the disc or USB device is protected by copyright.
Poor sound quality	Check if the disc is scratched or dirty.
	Bit rate may be too low.
It takes a relatively long time before the music starts playing.	If there are many folders or file levels on the MP3/WMA disc, or if it is a multisession disc, or USB device, some time may be required before the music starts playing.
Music cuts off or skips	The writing software and hardware combination might not match, or the writing speed, writing depth, writing width, etc., might not match the specifications. Try using the slowest writing speed.
Skipping with high bit rate files	Skipping may occur with large quantities of data, such as for high bit rate data.
Move immediately to the next song when playing	When a non-MP3/WMA file has been given an extension of ".MP3", ".WMA", ."mp3" or ".wma", or when play is prohibited by copyright protection, there will be approximately five seconds of no sound and then the player will skip to the next song.
Songs do not play back in the desired order	The playback order is the order in which the files were written by the writing software. Therefore, the files might not play in the desired order.

Bluetooth® Audio player

Bluetooth® is a trademark owned by Bluetooth SIG, Inc. and licensed to Robert Bosch GmbH and Visteon Corporation.

- Some Bluetooth® audio devices may not be recognized by the in-vehicle audio system.
- It is necessary to set up the wireless connection between a compatible Bluetooth® audio device and the in-vehicle Bluetooth® module before using the Bluetooth® audio player.
- Operating procedure of the Bluetooth® audio player will vary depending on the device. Make sure it is understood how to operate an audio device before using it with this system.
- The Bluetooth® audio player may be stopped under the following conditions:
  - Receiving a hands-free call.
  - Checking the connection to the hands-free phone.
- Do not place a Bluetooth® audio device in an area surrounded by metal or far away from the in-vehicle Bluetooth® module to prevent tone quality degradation and wireless connection disruption.
- While an audio device is connected through a Bluetooth® wireless connection, the battery power of the device may discharge quicker than usual.
- This system supports the Bluetooth® Audio Distribution Profile (A2DP, AVRCP).
- Wireless LAN (Wi-Fi) and the Bluetooth® functions share the same frequency band (2.4 GHz). Using the Bluetooth® and the wireless LAN functions at the same time may slow down or disconnect the communication and cause undesired noise. It is recommended that you turn off the wireless LAN (Wi-Fi) when using the Bluetooth® functions.

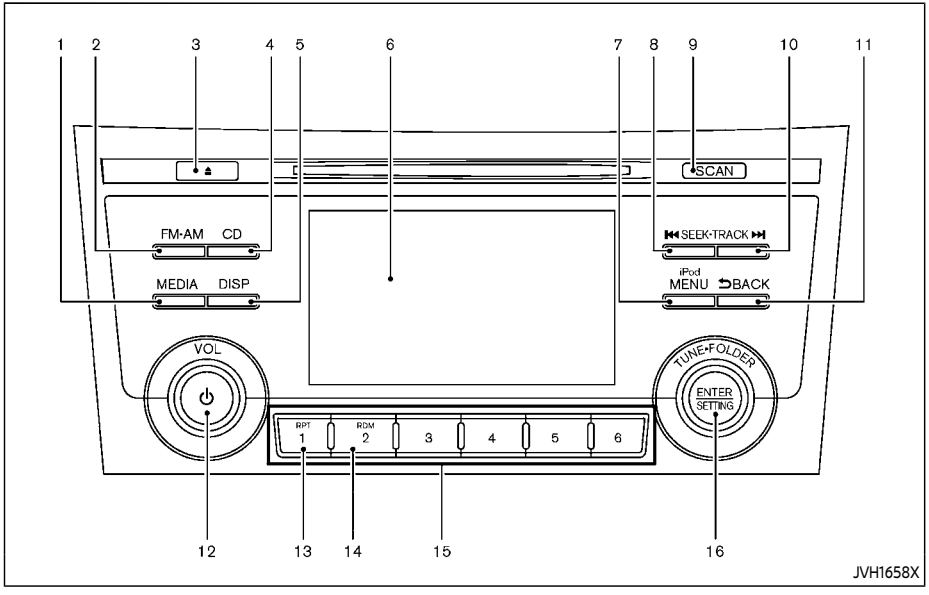

1. MEDIA button
2. FM·AM button
3. ⏏ (CD eject) button
4. CD button
5. DISP (display) button
6. Color display
7. iPod® MENU button
8. ⏮ (Backward seek) button
9. SCAN button
10. ⏭ (Forward seek) button
11. BACK button
12. Power/VOL (volume) dial
13. RPT (repeat) button
14. RDM (random) button
15. Radio station preset buttons
16. ENTER SETTING/TUNE·FOLDER dial

FM-AM RADIO WITH COMPACT DISC (CD) PLAYER

For all operation precautions, see “Audio operation precautions” (P.4-38).

Audio main operation

The audio system operates when the ignition switch is placed in the ACC or ON position.

Head unit:

The auto loudness circuit enhances the low and high frequency ranges automatically.

Power/VOL dial:

Push the Power/VOL dial to turn on and off the audio system.

Turn the Power/VOL dial to adjust the volume.

Audio settings:

The settings screen will appear when the ENTER SETTING/TUNE·FOLDER dial is pushed.

The following items are available in the settings screen.

- Bluetooth
  It is possible to set the Bluetooth® settings. For details of the Bluetooth®

audio player operation, see "Bluetooth® audio player operation" (P.4-54).

- Bass, Treble, Balance and Fade

  Controls the sound of the audio system. Balance adjusts the sound between the left and right speakers. Fade adjusts the sound between the front and rear speakers.

  Select the "Bass", "Treble", "Balance" or "Fade" using the ENTER SETTING/TUNE·FOLDER dial, and then push the ENTER SETTING/TUNE·FOLDER dial. Turn the ENTER SETTING/TUNE·FOLDER dial to adjust the bass, treble, balance and fade of the screen to the preferred level. Push the ENTER SETTING/TUNE·FOLDER dial to apply the setting.

- Brightness and Contrast

  Adjust the brightness and contrast of the screen.

  Select "Brightness" or "Contrast" using the ENTER SETTING/TUNE·FOLDER dial and then push the ENTER SETTING/TUNE·FOLDER dial. Turn the ENTER SETTING/TUNE·FOLDER dial to adjust the brightness and contrast of the screen to the preferred level. Push the ENTER SETTING/TUNE·FOLDER dial to apply the setting.

- Clock Adjust

  Adjust the clock according to the following procedure.

  1) Select "Clock Adjust" using the ENTER SETTING/TUNE·FOLDER dial and then push the ENTER SETTING/TUNE·FOLDER dial.
  2) Adjust the hour with the ENTER SETTING/TUNE·FOLDER dial and then push the ENTER SETTING/TUNE·FOLDER dial.
  3) Adjust the minute with the ENTER SETTING/TUNE·FOLDER dial and then push the ENTER SETTING/TUNE·FOLDER dial.

  24 hour clock is not available.

- On-Screen Clock

  When this item is turned on, a clock is always displayed in the upper right corner of the screen.

  Select the "On-Screen Clock" using the ENTER SETTING/TUNE·FOLDER dial and then push the ENTER SETTING/TUNE·FOLDER dial. You can toggle between "ON" and "OFF" using the ENTER SETTING/TUNE·FOLDER dial. Push the ENTER SETTING/TUNE·FOLDER dial to apply the setting.

- RDS Display

  RDS (radio data system) information can be shown on the display. Select "RDS Display" using the ENTER SETTING/TUNE·FOLDER dial and then push the ENTER SETTING/TUNE·FOLDER dial. You can toggle between "ON" and "OFF" using the ENTER SETTING/TUNE·FOLDER dial. Push the ENTER SETTING/TUNE·FOLDER dial to apply the setting.

- Speed Sensitive Vol.

  Select the "Speed Sensitive Vol." using the ENTER SETTING/TUNE·FOLDER dial and then push the ENTER SETTING/TUNE·FOLDER dial. To change the Speed Sensitive Volume (Speed Sensitive Vol.) level from off (0) to 5, turn the ENTER SETTING/TUNE·FOLDER dial. Push the ENTER SETTING/TUNE·FOLDER dial to apply the setting.

- AUX Vol.

  Controls the volume level of incoming sound when an auxiliary device is connected to the system. Select the "AUX Vol." using the ENTER SETTING/TUNE·FOLDER dial and then push the ENTER SETTING/TUNE·FOLDER dial. Choose a setting between +1 and +3 or choose 0 to disable the feature entirely. Push the ENTER SETTING/TUNE·FOLDER dial to apply the setting.

- Language Select

  The language settings can be changed.

Select "Language Select" using the ENTER SETTING/TUNE·FOLDER dial and then push the ENTER SETTING/TUNE·FOLDER dial. Use the ENTER SETTING/TUNE·FOLDER dial to select the preferred language. Push the ENTER SETTING/TUNE·FOLDER dial to apply the setting.

DISP button:

Display of the screen can be canceled by pushing the DISP button. You can still listen to music that is being played back even while the screen display is turned off. If you want to display the screen again, push the DISP button once more. Pushing some of the audio source buttons will also turn the screen back on and display the screens of the corresponding sources.

MEDIA button:

Pushing the MEDIA button will switch the audio source as follows:

USB/iPod® → Bluetooth Audio → AUX → USB/iPod®

FM-AM Radio operation

FM•AM radio (FM·AM) band select:

Push the FM•AM button to change the band as follows:

AM → FM1 → FM2→ AM

The FM stereo indicator (STEREO) is shown on the screen during FM stereo reception. When the stereo broadcast signal is weak, the radio automatically changes from stereo to monaural reception.

TUNE (Tuning):

Turn the ENTER SETTING/TUNE·FOLDER dial for manual tuning.

Radio Data System (RDS):

RDS stands for Radio Data System, and is a data information service transmitted by some radio stations on the FM band (not AM band) encoded within a regular radio broadcast. Currently, most RDS stations are in large cities, but many stations are now considering broadcasting RDS data.

The station name, such as "The Groove", is displayed on the display.

▶▶| |◀◀ SEEK tuning:

Push the ▶▶| or |◀◀ button to tune from low to high or high to low frequencies and to stop at the next broadcasting station.

SCAN SCAN tuning:

Push the SCAN button to tune from low to high frequencies and stop at each broadcasting station for several seconds. Pushing the SCAN button again during this several seconds period will stop SCAN tuning and the radio will remain tuned to that station.

If the SCAN button is not pushed within this period, SCAN tuning moves to the next station.

1 to 6 Station memory operations:

Up to 12 stations can be set for the FM band (6 each for FM1 and FM2) and 6 stations can be set for the AM band.

1. Choose the radio band using the FM•AM button.
2. Tune to the desired station.
3. Push and hold the desired station preset button 1 to 6 until beep sounds.
4. The station indicator will then come on. The station is now set to the button memory.

5. Other buttons can be set in the same manner.

If the battery cable is disconnected, or if the fuse opens, the station memory will be erased. In that case, reset the desired stations.

CD player operation

Place the ignition switch in the ACC or ON position. Insert the Compact Disc (CD) into the slot with the label side facing up. The CD will be guided automatically into the slot and start playing.

After loading the CD, the number of tracks on the CD and the play time will appear on the display.

If another audio source is already operating, it will automatically turn off and the CD will play.

If the system has been turned off while the CD was playing, pushing the Power/VOL dial will start the CD.

CD PLAY:

When the CD button is pushed while a CD is loaded, the CD will start playing.

CD/MP3 display mode:

While listening to an MP3/WMA CD, certain text may be displayed on the screen if the CD has been encoded with text information. Depending on how the MP3/WMA CD is encoded, information such as Artist, Song and Folder will be displayed. The track number and the total number of tracks in the current folder or on the current disc are displayed on the screen as well.

SEEK/TRACK:

When the ⏮ or ⏭ button is pushed and hold while the CD is being played, the CD will play while fast forwarding or rewinding. When the button is released, the CD will return to normal play speed.

When the ⏮ or ⏭ button is pushed while the CD is being played, the next track or the beginning of the current track on the CD will be played. Push the ⏮ button again to select the previous track.

REPEAT (RPT):

When the RPT button is pushed while the CD is played, the play pattern can be changed as follows:

(CD)

(Normal) ⇔ 1 Track Repeat

(CD with compressed audio files)

(Normal) → 1 Folder Repeat → 1 Track Repeat → (Normal)

RANDOM (RDM):

When the RDM button is pushed while a CD is being played, the play pattern can be changed as follows:

(CD)

(Normal) ⇔ 1 Disc Random

(CD with compressed audio files)

(Normal) → 1 Disc Random → 1 Folder Random → (Normal)

CD eject:

When the ⏏ button is pushed with the CD loaded, the CD will be ejected.

If the CD comes out and is not removed, it will be pulled back into the slot to protect it.

USB memory player operation

USB memory main operation:

The USB connection port is located on the lower part of the instrument panel. (See "USB (Universal Serial Bus) connection port" (P.4-74).) Connect a USB memory into the port. When the audio system operates, the system will switch to the USB memory mode automatically.

If the system has been turned off while the USB memory was playing, pushing the Power/VOL dial will start the USB

memory.

MEDIA PLAY:

To change to the USB memory mode, push the MEDIA button with a USB memory connected until the USB memory mode is selected.

⏮ ⏭ Next/Previous File and Fast Forward/Rewind:

When the ⏮ or ⏭ button is pushed and hold while a USB memory is being played, the USB memory will play while forwarding or rewinding. When the button is released, the USB memory will return to normal play speed.

When the ⏮ or ⏭ button is pushed while the USB memory is being played, the next track or the beginning of the current track on the USB memory will be played. Push the ⏮ button again to select the previous track.

Folder selection:

To change to another folder in the USB memory, choose a folder displayed on the screen using the ENTER SETTING/TUNE·FOLDER dial.

RPT REPEAT (RPT):

When the RPT button is pushed while the USB memory is played, the play pattern can be change as follows.

(Normal) → 1 Folder Repeat → 1 Track Repeat → (Normal)

RDM RANDOM (RDM):

When the RDM button is pushed while a USB memory is being played, the play pattern can be changed as follows.

(Normal) → All Random → 1 Folder Random → (Normal)

BACK BACK button:

When the BACK button is pushed, it returns to the previous display.

iPod® player operation

Connecting iPod®:

The USB connection port is located on the lower part of the instrument panel. (See "USB (Universal Serial Bus) connection port" (P.4-74).) Connect the iPod® cable to the USB connection port. When the audio system operates, the system will switch to the iPod® mode automatically. The battery of the iPod® is charged while the cable is connected to the vehicle.

Depending on the version of the iPod®, the display on the iPod® shows a NISSAN or Accessory Attached screen when the connection is completed. When the iPod® is connected to the vehicle, the iPod® music library can only be operated by the vehicle audio controls.

Compatibility:

The following models are compatible:

- iPod nano® 1G (Firmware version 1.3.1 -)
- iPod nano® 2G (Firmware version 1.1.3 -)
- iPod nano® 3G (Firmware version 1.0.0 -)
- iPod nano® 4G (Firmware version 1.0.2 -)
- iPod nano® 5G (Firmware version 1.0.1 -)
- iPod nano® 6G (Firmware version 1.0 -)
- iPod nano® 7G (Firmware version 1.0.0 -)
- iPod® 5G (Firmware version 1.2.1 -)
- iPod classic® (Firmware version 1.0.0 -)
- iPod Touch® (iOS 1.1 -)
- iPod Touch® 2G (iOS 2.1.1 -)
- iPod Touch® 3G (iOS 3.1 -)
- iPod Touch® 4G (iOS 4.1 -)
- iPod Touch® 5G (iOS 6.0.0 -)
- iPhone® (iOS 1.0.0 - 2.2.1)
- iPhone® 3G (iOS 2.1 -)

- iPhone® 3GS (iOS 3.0 -)
- iPhone® 4/4S (iOS 4.0 -)
- iPhone® 5 (iOS 6.0.0 -)

Operations attributable to firmware update by Apple are not guaranteed.

iPod® main operation:

The system operates when the ignition switch is placed in the ACC or ON position. Push the MEDIA button repeatedly or push the iPod MENU button to switch to the iPod® mode.

If the system was turned off while the iPod® was playing, pushing the Power/VOL dial will start the iPod®.

If another audio source is playing and the iPod® is connected, push the MEDIA button repeatedly or push the iPod MENU button to switch to the iPod® mode.

When the iPod MENU button is pushed while the iPod® is connected, the interface for iPod® operation is shown on the display. The items on the menu list can be scrolled by turning the ENTER SETTING/TUNE·FOLDER dial while the iPod® is operating. To select an item, push ENTER SETTING/TUNE·FOLDER dial. Items in the iPod® menu appear on the display in the following order.

- Now Playing
- Playlists
- Artists
- Albums
- Songs
- Podcasts
- Genres
- Composers
- Audiobooks
- Shuffle Songs

For more information about each item, see the iPod® owner's manual.

▶▶| |◀◀ Next/Previous Track and Fast Forward/Rewind:

When the ▶▶| or |◀◀ button is pushed and hold while the iPod® is playing, the iPod® will play while fast forwarding or rewinding. When the button is released, the iPod® will return to the normal play speed.

When the ▶▶| or |◀◀ button is pushed while the iPod® is playing, the next track or the beginning of the current track on the iPod® will be played. Push the |◀◀ button again to select the previous track.

RPT REPEAT (RPT):

When the RPT button is pushed while a track is being played, the play pattern can be changed as follows:

(Repeat Off) → 1 Track Repeat→ All Repeat → (Repeat Off)

RDM RANDOM (RDM):

When the RDM button is pushed while a track is being played, the play pattern can be changed as follows:

(Shuffle Off) → Track Shuffle → (Shuffle Off)

BACK BACK button:

The display will return to the previous screen.

Bluetooth® audio player operation

If you have a compatible Bluetooth® audio device that is capable of playing audio files, the device can be connected to the vehicle's audio system so that the audio files on the device play through the vehicle's speakers.

Regulatory information:

Bluetooth® trademark:

Bluetooth® is a trademark owned by Bluetooth SIG, Inc. and licensed to Visteon Corporation.

Connecting Bluetooth® device:

To connect your Bluetooth® device to the vehicle, follow the procedure below:

1. Push the ENTER SETTING/TUNE·FOLDER dial.

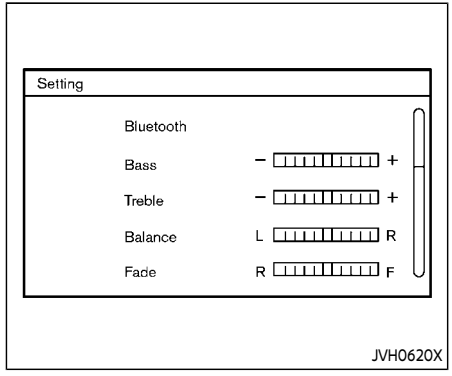

2. Select "Bluetooth" .
3. Select "Add Phone" . This same screen can be accessed to remove, replace or select a different Bluetooth® device.
4. The system acknowledges the command and asks you to initiate a connection from the Bluetooth® device. The procedure for connecting a Bluetooth® device varies according to the cellular phone model. See the owner's manual of the Bluetooth® device for details.

Bluetooth® audio main operation:

To switch to the Bluetooth® audio mode, push the MEDIA button repeatedly until the Bluetooth® audio mode is displayed on the screen.

The controls for the Bluetooth® audio are displayed on the screen. Use the Preset 3 button to play and use the Preset 4 button to pause.

AUX device player operation

The AUX input jack is located on the lower part of the instrument panel. (See "AUX (Auxiliary) input jack" (P.4-75).) The AUX input jack accepts any standard analog audio input such as from a portable cassette tape/CD player, MP3 player or laptop computer.

Push the MEDIA button repeatedly to play a compatible device when it is plugged into the AUX input jack.

NISSAN strongly recommends using a stereo mini plug cable when connecting your music device to the audio system. Music may not play properly when a monaural cable is used.

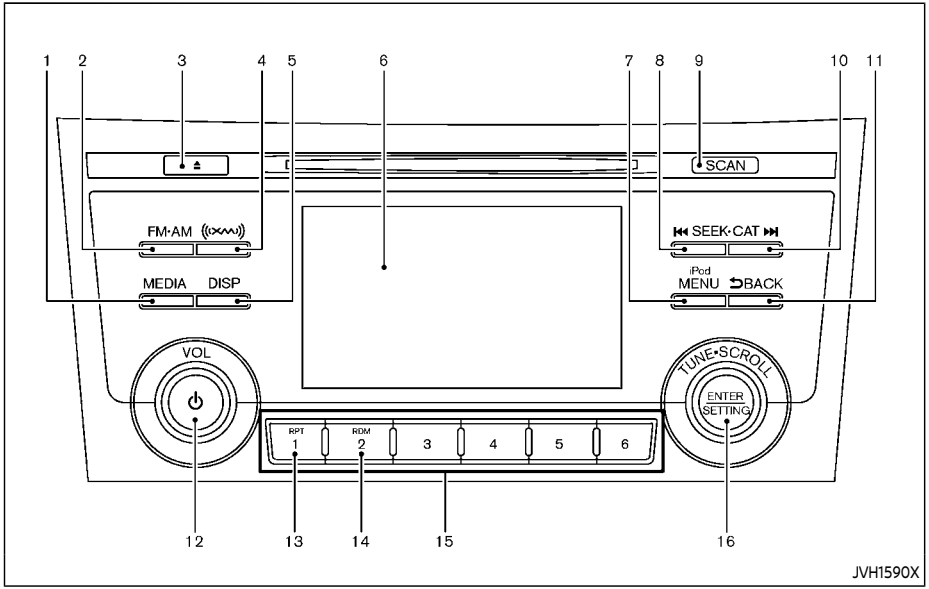

1. MEDIA button
2. FM·AM button
3. ⏏ (CD eject) button
4. XM button
5. DISP (display) button
6. Color display
7. iPod® MENU button
8. ⏮ (Backward seek) button
9. SCAN button
10. ⏭ (Forward seek) button
11. BACK button
12. Power/VOL (volume) dial
13. RPT (repeat) button
14. RDM (random) button
15. Radio station preset buttons
16. ENTER SETTING/TUNE·SCROLL dial

FM-AM-SAT RADIO WITH COMPACT DISC (CD) PLAYER (Type A) (if so equipped)

For all operation precautions, see “Audio operation precautions” (P.4-38).

- No satellite radio reception is available when the SAT band option is selected unless the optional satellite receiver and antenna are installed, and there is an active SiriusXM Satellite Radio subscription.
- The satellite radio mode requires an active SiriusXM Satellite Radio subscription. The satellite radio is not available in Alaska, Hawaii and Guam.
- It may take some time to receive the activation signal after subscribing the SiriusXM Satellite Radio. After receiving the activation signal, an available channel list will be automatically updated in the radio. Place the ignition switch from LOCK to ACC to update the channel list.

Audio main operation

The audio system operates when the ignition switch is placed in the ACC or ON position.

Head unit:

The auto loudness circuit enhances the low and high frequency ranges automatically.

Power/VOL dial:

Push the Power/VOL dial to turn on and off the audio system.

Turn the Power/VOL dial to adjust the volume.

Audio settings:

The settings screen will appear when pushing the ENTER SETTING/TUNE·SCROLL dial.

The following items are available in the settings screen.

- Bluetooth

  It is possible to set the Bluetooth® settings. For details of the Bluetooth® audio player operation, see "Bluetooth® audio player operation" (P.4-61).
- Bass, Treble, Balance and Fade

  Controls the sound of the audio system. Balance adjusts the sound between the left and right speakers. Fade adjusts the sound between the front and rear speakers.

  Select the "Bass", "Treble", "Balance" or "Fade" using the ENTER SETTING/TUNE·SCROLL dial and then push the ENTER SETTING/TUNE·SCROLL dial. Turn the ENTER SETTING/TUNE·SCROLL dial to adjust the bass, treble, balance and fade of the screen to the preferred level. Push the ENTER SETTING/TUNE·SCROLL dial to apply the setting.
- Brightness and Contrast

  Adjust the brightness and contrast of the screen.

  Select the "Brightness" or "Contrast" using the ENTER SETTING/TUNE·SCROLL dial and then push the ENTER SETTING/TUNE·SCROLL dial. Turn the ENTER SETTING/TUNE·SCROLL dial to adjust the brightness and contrast of the screen to the preferred level. Push the ENTER SETTING/TUNE·SCROLL dial to apply the setting.
- Clock Adjust

  Adjust the clock according to the following procedure.

  1) Select "Clock Adjust" using the ENTER SETTING/TUNE·SCROLL dial and then push the ENTER SETTING/TUNE·SCROLL dial.
  2) Adjust the hour with the ENTER SETTING/TUNE·SCROLL dial and then push the ENTER SETTING/TUNE·SCROLL dial.
  3) Adjust the minute with the ENTER SETTING/TUNE·SCROLL dial and then push the ENTER SETTING/TUNE·SCROLL dial.

  24 hour clock is not available.
- On-Screen Clock

  When this item is turned on, a clock is always displayed in the upper right corner of the screen.

  Select the "On-Screen Clock" using the ENTER SETTING/TUNE·SCROLL dial and then push the ENTER SETTING/TUNE·SCROLL dial. You can toggle between "ON" and "OFF" using the ENTER SETTING/TUNE·SCROLL dial. Push the ENTER SETTING/TUNE·FOLDER dial to apply the setting.
- RDS Display

  RDS (radio data system) information can be shown on the display. Select "RDS Display" using the ENTER SETTING/TUNE·SCROLL dial and then push the ENTER SETTING/TUNE·SCROLL dial. You can toggle between "ON" and "OFF" using the ENTER SETTING/TUNE·SCROLL dial. Push the ENTER SETTING/TUNE·SCROLL dial to apply the setting.

- Speed Sensitive Vol.

  Select the "Speed Sensitive Vol." using the ENTER SETTING/TUNE·SCROLL dial and then push the ENTER SETTING/TUNE·SCROLL dial. To change the Speed Sensitive Volume (Speed Sensitive Vol.) level from off (0) to 5, turn the ENTER SETTING/TUNE·SCROLL dial. Push the ENTER SETTING/TUNE·SCROLL dial to apply the setting.
- AUX Vol.

  Controls the volume level of incoming sound when an auxiliary device is connected to the system. Select the "AUX Vol." using the ENTER SETTING/TUNE·SCROLL dial and then push the ENTER SETTING/TUNE·SCROLL dial. Choose a setting between +1 and +3 or choose 0 to disable the feature entirely. Push the ENTER SETTING/TUNE·SCROLL dial to apply the setting.
- Language Select

  The language settings can be changed.

  Select "Language Select" using the ENTER SETTING/TUNE·SCROLL dial and then push the ENTER SETTING/TUNE·SCROLL dial. Use the ENTER SETTING/TUNE·SCROLL dial to select the preferred language. Push the ENTER SETTING/TUNE·SCROLL dial to apply the setting.

DISP button:

Display of the screen can be canceled by pushing the DISP button. You can still listen to music that is being played back even while the screen display is turned off. If you want to display the screen again, push the DISP button once more. Pushing some of the audio source buttons will also turn the screen back on and display the screens of the corresponding sources.

MEDIA button:

Pushing the MEDIA button will switch the audio source as follows:

CD →USB/iPod® → Bluetooth Audio → AUX → CD

FM-AM-SAT Radio operation

FM•AM radio (FM·AM) band select:

Pushing the FM•AM button will change the band as follows:

AM → FM1 → FM2 → AM

The FM stereo indicator (STEREO) is shown on the screen during FM stereo reception. When the stereo broadcast signal is weak, the radio automatically changes from stereo to monaural reception.

XM radio (SAT) band select:

Pushing the XM button will change the band as follows:

XM1 → XM2 → XM3 → XM1 (satellite, if so equipped)

When the XM button is pushed while the ignition switch is placed in the ACC or ON position, the radio will come on at the channel last played.

The last channel played will also come on when the Power/VOL dial is pushed to turn the audio system power on.

The satellite radio is not available in Alaska, Hawaii and Guam.

If another audio source is playing when the XM button is pushed, the audio source will automatically be turned off and the last radio channel played will come on.

When the stereo broadcast signal is weak, the radio will automatically change from stereo to monaural reception.

TUNE (Tuning):

- For AM and FM radio

  Turn the radio ENTER SETTING/TUNE·SCROLL dial for manual tuning.
- For SiriusXM Satellite Radio (if so equipped)

  Turn the radio ENTER SETTING/TU-

NE·SCROLL dial to seek channels from all of the categories when any category is not selected.

Radio Data System (RDS):

RDS stands for Radio Data System, and is a data information service transmitted by some radio stations on the FM band (not AM band) encoded within a regular radio broadcast. Currently, most RDS stations are in large cities, but many stations are now considering broadcasting RDS data.

The station name, such as "The Groove", is displayed on the display.

[|◀◀] [▶▶|] SEEK tuning/CAT (category):

- For AM and FM radio
  Push the [|◀◀] or [▶▶|] button to tune from low to high or high to low frequencies and to stop at the next broadcasting station.
- For SiriusXM Satellite Radio
  Push the [|◀◀] or [▶▶|] button to tune to the first channel of the next or previous category.

[SCAN] SCAN tuning:

Push the [SCAN] button to tune from low to high frequencies and stop at each broadcasting station for several seconds. Pushing the [SCAN] button again during this several seconds period will stop SCAN tuning and the radio will remain tuned to that station.

If the [SCAN] button is not pushed within five seconds, SCAN tuning moves to the next station.

[1] to [6] Station memory operations:

6 stations can be set for the AM band. 12 stations can be set for the FM band (6 for FM1, 6 for FM2). 18 channels can be set for the satellite radio (6 for XM1, 6 for XM2, 6 for XM3).

1. Choose the radio band using the [FM•AM] or XM button.
2. Tune to the desired station or channel.
3. Push and hold the desired station or channel preset button [1] to [6] until beep sounds.
4. The station or channel indicator will then come on. Memorizing is now complete.
5. Other buttons can be set in the same manner.

If the battery cable is disconnected, or if the fuse opens, the station memory will be erased. In that case, reset the desired stations or channels.

CD player operation

Place the ignition switch in the ACC or ON position, and insert the Compact Disc (CD) into the slot with the label side facing up. The CD will be guided automatically into the slot and start playing.

After loading the CD, the number of tracks on the CD and the play time will appear on the display.

If another audio source is already operating, it will automatically turn off and the CD will play.

If the system was turned off while the CD was playing, pushing the Power/VOL dial will start the CD.

[MEDIA] PLAY:

With a CD loaded, push the [MEDIA] button until the CD mode is displayed on the screen.

CD/MP3 display mode:

While listening to an MP3/WMA CD, certain text may be displayed on the screen if the CD has been encoded with text information. Depending on how the MP3/WMA CD is encoded, information such as Artist, Song and Folder will be displayed. The track number and the total number of tracks in the current folder or on the current disc are displayed on the screen

as well.

SEEK/TRACK:

When the ⏮ or ⏭ button is pushed and hold while the CD is being played, the CD will play while fast forwarding or rewinding. When the button is released, the CD will return to normal play speed.

When the ⏮ or ⏭ button is pushed while the CD is being played, the next track or the beginning of the current track on the CD will be played. Push the ⏮ button again to select the previous track.

REPEAT (RPT):

When the RPT button is pushed while the CD is played, the play pattern can be changed as follows:

(CD)

(Normal) ⇔ 1 Track Repeat

(CD with compressed audio files)

(Normal) → 1 Folder Repeat → 1 Track Repeat → (Normal)

RANDOM (RDM):

When the RDM button is pushed while a CD is being played, the play pattern can be changed as follows:

(CD)

(Normal) ⇔ 1 Disc Random

(CD with compressed audio files)

(Normal) → 1 Disc Random → 1 Folder Random → (Normal)

CD eject:

When the ⏏ button is pushed with the CD loaded, the CD will be ejected.

If the CD comes out and is not removed, it will be pulled back into the slot to protect it.

USB memory player operation

USB memory main operation:

The USB connection port is located on the lower part of the instrument panel. (See "USB (Universal Serial Bus) connection port" (P.4-74).) Connect a USB memory into the port. When the audio system operates, the system will switch to the USB memory mode automatically.

If the system has been turned off while the USB memory was playing, pushing the Power/VOL dial will start the USB memory.

PLAY:

To change to the USB memory mode, push the MEDIA button with a USB memory connected until the USB memory mode is selected.

Next/Previous File and Fast Forward/Rewind:

When the ⏮ or ⏭ button is pushed and held while a USB memory is being played, the USB memory will play while forwarding or rewinding. When the button is released, the USB memory will return to normal play speed.

When the ⏮ or ⏭ button is pushed while the USB memory is being played, the next track or the beginning of the current track on the USB memory will be played. Push the ⏮ button again to select the previous track.

Folder selection:

To change to another folder in the USB memory, choose a folder displayed on the screen using the ENTER SETTING/TUNE·SCROLL dial.

RPT REPEAT (RPT):

When the RPT button is pushed while the USB memory is played, the play pattern can be change as follows.

(Normal) → 1 Folder Repeat → 1 Track Repeat → (Normal)

RDM RANDOM (RDM):

When the RDM button is pushed while a USB memory is being played, the play pattern can be changed as follows.

(Normal) → All Random → 1 Folder Random → (Normal)

BACK BACK button:

When the BACK button is pushed, it returns to the previous display.

iPod® player operation

Connecting iPod®:

The USB connection port is located on the lower part of the instrument panel. (See "USB (Universal Serial Bus) connection port" (P.4-74).) Connect the iPod® cable to the USB connection port. When the audio system operates, the system will switch to the iPod® mode automatically. The battery of the iPod® is charged while the cable is connected to the vehicle.

Depending on the version of the iPod®, the display on the iPod® shows a NISSAN or Accessory Attached screen when the connection is completed. When the iPod® is connected to the vehicle, the iPod® music library can only be operated by the vehicle audio controls.

Compatibility:

The following models are compatible:

- iPod nano® 1G (Firmware version 1.3.1 -)
- iPod nano® 2G (Firmware version 1.1.3 -)
- iPod nano® 3G (Firmware version 1.0.0 -)
- iPod nano® 4G (Firmware version 1.0.2 -)
- iPod nano® 5G (Firmware version 1.0.1 -)
- iPod nano® 6G (Firmware version 1.0 -)
- iPod nano® 7G (Firmware version 1.0.0 -)
- iPod® 5G (Firmware version 1.2.1 -)
- iPod classic® (Firmware version 1.0.0 -)
- iPod Touch® (iOS 1.1 -)
- iPod Touch® 2G (iOS 2.1.1 -)
- iPod Touch® 3G (iOS 3.1 -)
- iPod Touch® 4G (iOS 4.1 -)
- iPod Touch® 5G (iOS 6.0.0 -)
- iPhone® (iOS 1.0.0 - 2.2.1)
- iPhone® 3G (iOS 2.1 -)
- iPhone® 3GS (iOS 3.0 -)
- iPhone® 4/4S (iOS 4.0 -)
- iPhone® 5 (iOS 6.0.0 -)

Operations attributable to firmware update by Apple are not guaranteed.

iPod® main operation:

The system operates when the ignition switch is placed in the ACC or ON position. Push the MEDIA button repeatedly or push the iPod MENU button to switch to the iPod® mode.

If the system was turned off while the iPod® was playing, pushing the Power/VOL dial will start the iPod®.

If another audio source is playing and the iPod® is connected, push the MEDIA button repeatedly or push the iPod MENU button to switch to the iPod® mode.

When the iPod MENU button is pushed while the iPod® is connected, the interface for iPod® operation is shown on the display. The items on the menu list can be scrolled by turning the ENTER SETTING/TUNE·SCROLL dial while the iPod® is operating. To select an item, push ENTER SETTING/TUNE·SCROLL dial. Items in the iPod® menu appear on the display in the following order.

- Now Playing
- Playlists
- Artists
- Albums
- Songs
- Podcasts
- Genres
- Composers
- Audiobooks
- Shuffle Songs

For more information about each item, see the iPod® owner's manual.

|◀◀ ▶▶| Next/Previous Track and Fast Forward/Rewind:

When the |◀◀ or ▶▶| button is pushed and hold while the iPod® is playing, the iPod® will play while fast forwarding or rewinding. When the button is released, the iPod® will return to the normal play speed.

When the |◀◀ or ▶▶| button is pushed while the iPod® is playing, the next track or the beginning of the current track on the iPod® will be played. Push the |◀◀ button again to select the previous track.

RPT REPEAT (RPT):

When the RPT button is pushed while a track is being played, the play pattern can be changed as follows:

(Repeat Off) → 1 Track Repeat→ All Repeat → (Repeat Off)

RDM RANDOM (RDM):

When the RDM button is pushed while a track is being played, the play pattern can be changed as follows:

(Shuffle Off) → Track Shuffle → (Shuffle Off)

BACK BACK button:

The display will return to the previous screen.

Bluetooth® audio player operation

If you have a compatible Bluetooth® audio device that is capable of playing audio files, the device can be connected to the vehicle's audio system so that the audio files on the device play through the vehicle's speakers.

Regulatory information:

Bluetooth® trademark:

Bluetooth® is a trademark owned by Bluetooth SIG, Inc. and licensed to Visteon Corporation.

Connecting Bluetooth® device:

To connect your Bluetooth® device to the vehicle, follow the procedure below:

1. Push the ENTER SETTING/TUNE·SCROLL dial.

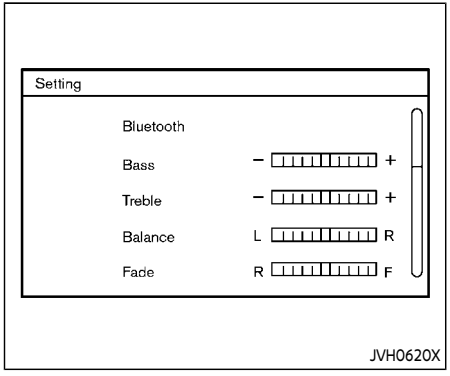

2. Select “Bluetooth” .
3. Select “Add Phone” . This same screen can be accessed to remove, replace or select a different Bluetooth® device.
4. The system acknowledges the command and asks you to initiate a connection from the Bluetooth® device. The procedure for connecting a Bluetooth® device varies according to the cellular phone model. See the owner’s manual of the Bluetooth® device for details.

Bluetooth® audio main operation:

To switch to the Bluetooth® audio mode, push the MEDIA button repeatedly until the Bluetooth® audio mode is displayed on the screen.

The controls for the Bluetooth® audio are displayed on the screen. Use the Preset 3 button to play and use the Preset 4 button to pause.

AUX device player operation

The AUX input jack is located on the lower part of the instrument panel. (See “AUX (Auxiliary) input jack” (P.4-75).) The AUX input jack accepts any standard analog audio input such as from a portable cassette tape/CD player, MP3 player or laptop computer.

Push the MEDIA button repeatedly to play a compatible device when it is plugged into the AUX input jack.

NISSAN strongly recommends using a stereo mini plug cable when connecting your music device to the audio system. Music may not play properly when a monaural cable is used.

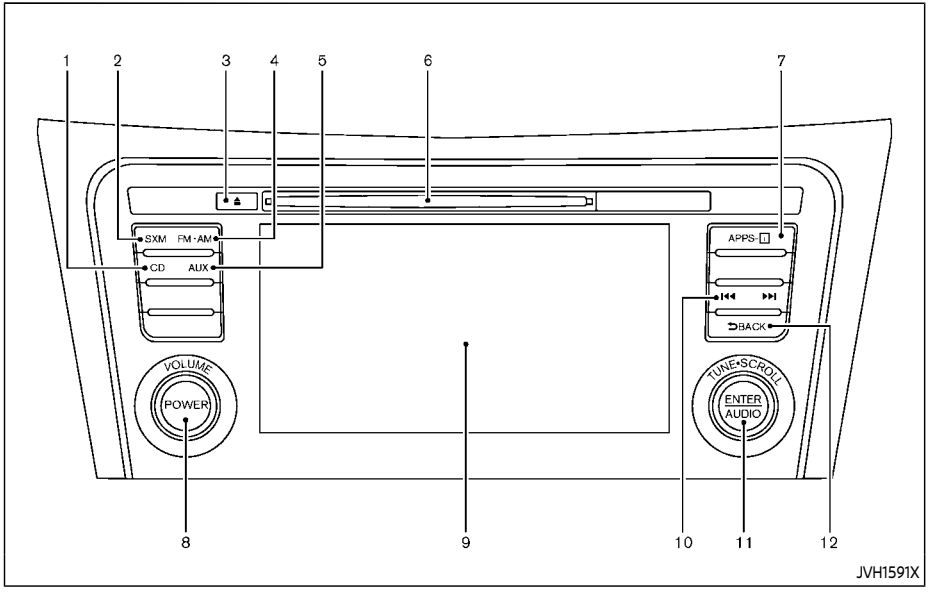

1. CD button
2. SXM button*
3. ⏏ (CD eject) button
4. FM·AM button
5. AUX button
6. CD insert slot
7. APPS·i button
8. POWER/VOLUME dial
9. Touch screen
10. ⏮ (Backward seek) button/ ⏭ (Forward seek) button
11. ENTER AUDIO/TUNE·SCROLL dial
12. BACK button

*No satellite radio reception is available when the SXM button is pushed to access satellite radio channels unless optional satellite receiver and antenna are installed and a SiriusXM Satellite Radio service subscription is active. Satellite radio is not available in Alaska, Hawaii and Guam.

FM-AM-SAT RADIO WITH COMPACT DISC (CD) PLAYER (Type B) (if so equipped)

For all operation precautions, see “Audio operation precautions” (P.4-38).

Audio main operation

POWER/VOLUME dial:

Place the ignition switch in the ACC or ON position and push the POWER/VOLUME dial while the system is off to call up the available audio source that was playing immediately before the system was turned off.

To turn the system off, push the POWER/VOLUME dial.

Turn the POWER/VOLUME dial to adjust the volume.

This vehicle may be equipped with Speed Sensitive Volume. When this feature is active, the audio volume changes as the driving speed changes.

Audio settings:

Adjust the audio settings according to the following procedure.

1. Push the APPS·i button.
2. Touch the "Settings" key.
3. Touch the "Audio" key.

   Adjust the following items to the desired setting.

   - Bass:

     Adjusts the bass to the desired level.
   - Treble:

     Adjusts the treble to the desired level.
   - Balance:

     Adjusts the balance to the desired level. Balance adjusts the sound level between the left and right speakers.
   - Fade:

     Adjusts the fade to the desired level. Fade adjusts the sound level between the front and rear speakers.
   - Speed Sensitive Vol.:

     Adjusts the speed sensitive volume function, which increases the volume of the audio system as the speed of the vehicle increases. Set to "0" to disable the feature. The higher the setting, the more the volume increases in relation to vehicle speed.
   - AUX Volume Level:

     Controls the volume level of incoming sound when an auxiliary device is connected to the system. Available options are Low (quiet), Medium, and High (loud).

Bass, treble, balance and fade can also be adjusted by pushing the ENTER AUDIO/TUNE·SCROLL dial.

SXM settings:

View the SXM settings according to the following procedure.

1. Push the APPS·i button.
2. Touch the "Settings" key.
3. Touch the "SXM" key.

The signal strength, activation status and other information are displayed on the screen.

FM/AM/SAT radio operation

Radio (FM·AM) band select:

Push the FM·AM button to change the band as follows:

AM → FM1 → FM2 → AM

If another audio source is playing when the FM·AM button is pushed, the audio source playing will automatically be turned off and the last radio station played will begin playing.

The FM stereo indicator (ST) is shown on the screen during FM stereo reception. When the stereo broadcast signal is weak, the radio automatically changes from stereo to monaural reception.

Radio (SXM) band select:

Pushing the SXM button will change the band as follows:

SXM1 → SXM2 → SXM3 → SXM1 (satellite, if so equipped)

When the SXM button is pushed while the ignition switch is placed in the ACC or ON position, the radio will come on at the last channel played.

The last channel played will also come on when the POWER/VOLUME dial is pushed.

If a CD is playing when the SXM button is pushed, the CD will automatically be turned off and the last radio channel

played will come on.

While the radio is in SXM mode, the operation can be controlled through the touch screen. Touch the "Channels" key to display a list of channels. Touch a channel displayed on the list to change to that channel. Touch the "Categories" key to display a list of categories. Touch a category displayed on the list to display options within that category.

Tuning with the touch screen:

When in AM or FM mode, the radio can be tuned using the touch screen. To bring up the visual tuner, touch the "Tune" key on the lower right corner of the screen. A screen appears with a bar running from low frequencies on the left to high frequencies on the right. Touch the screen at the location of the frequency you wish to tune and the station will change to that frequency. To return to the regular radio screen, touch the "OK" key.

Tuning with the ENTER AUDIO/TUNE·SCROLL dial:

The radio can also be manually tuned using the ENTER AUDIO/TUNE·SCROLL dial. When in FM or AM mode, turn the ENTER AUDIO/TUNE·SCROLL dial to the left for lower frequencies or to the right for higher frequencies. When in SXM mode, turn the ENTER AUDIO/TUNE·SCROLL dial to change the channel.

⏮ ⏭ SEEK tuning:

When in FM or AM mode, push the ⏮ or ⏭ button to tune from low to high or high to low frequencies and to stop at the next broadcasting station.

When in SXM mode, push the ⏮ or ⏭ button to change the category.

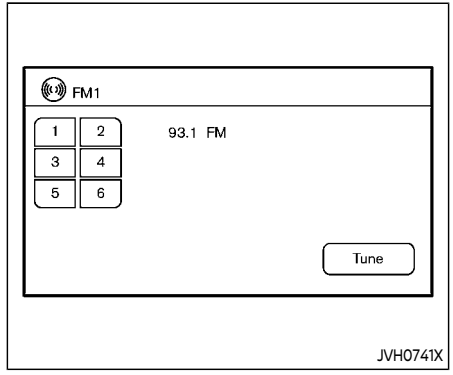

1 to 6 station or channel memory operations:

Twelve stations can be set for the FM band (6 for FM1, 6 for FM2) and six stations can be set for the AM band. Eighteen channels can be set for the SXM band (6 for SXM1, 6 for SXM2, 6 for SXM3).

1. Choose the radio band AM, FM1 or FM2 using the FM·AM button or choose the radio band SXM1, SXM2, SXM3 using the SXM button.
2. Tune to the desired station or channel using manual or seek tuning. Touch and hold any of the desired station or channel memory keys (1 – 6) until a beep sound is heard. The station or

channel indicator will then come on.

3. Other keys can be set in the same manner.

If the battery cable is disconnected or if the fuse opens, the radio memory will be erased. In that case, reset the desired stations or channels.

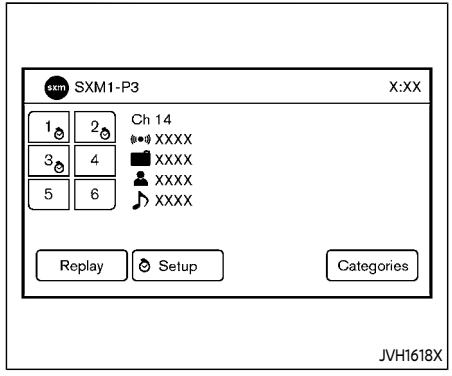

Smart Favorites preset setup (if so equipped):

The Smart Favorites feature allows the user to designate presets, within the SXM1, SXM2 and SXM3 bands, as their Smart Favorites. When any of the Smart Favorite presets are selected, the current track on that channel will play from the beginning of the song.

To program a Smart Favorite preset:

1. Push the SXM button.
2. Touch the "Setup" key.
3. Touch the "Tune Start" key to activate (ON) or deactivate (OFF) Smart Favorites.
4. Touch the "Add Preset" key to select an available preset.

For additional information, refer to "1 to 6 station or channel memory operations" (P.4-65) in this section regarding preset memory operations.

NOTE:

- **Smart Favorites will start functioning only after the audio unit is turned on for a few minutes.**
- **Tune Start is supported for music channels only.**

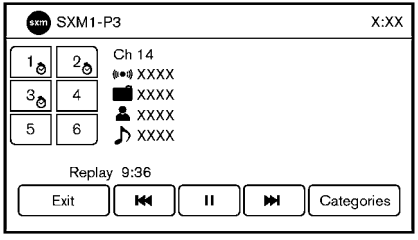

JVH1619X

Replay screen

The Replay Screen gives the user the ability to replay, skip, pause or rewind the currently aired broadcast.

When the "Replay" key is touched, the Replay Screen is prompted.

To replay a track from the beginning, touch the " ⏮ " key. The user can continue to touch the " ⏮ " key to replay previous songs, but can only go back as far as the system permits. The system will warn the user when they cannot skip any further back by displaying "At the End" in the bottom left corner of the screen.

To skip a track, touch the " ⏭ " key. "Live" will appear in the bottom left corner of the screen indicating the difference from play time to live audio.

To rewind/fast forward a track, touch and hold the " ⏮ " or " ⏭ " key.

To pause a track, touch the " ⏸ " key.

Compact Disc (CD) player operation

Insert a CD into the slot with the label side facing up. The CD will be guided automatically into the slot and will start playing. If the radio is already operating, it automatically turns off and the Compact Disc (CD) begins to play.

CD PLAY:

When the CD button is pushed with the system off and the CD loaded, the system will turn on and the CD will start to play.

When the CD button is pushed with a CD loaded and the radio playing, the radio will automatically be turned off and the CD will start to play.

CD/MP3/WMA display mode:

While listening to a CD or an MP3/WMA CD, certain text may be displayed (when a CD encoded with text is being used). Depending on how the CD or MP3/WMA CD is encoded, the text is displayed listing the artist, album and song title. There are other keys displayed on the screen when a CD is playing.

Menu item		
CD/MP3 display mode	Random	Touch the "Random" key to apply a random play pattern to the CD. If an MP3 CD is playing, touching "Random" or alternates between Random Folder, and Random All. This text will appear on the display. To cancel Random mode, touch the "Random" key until the key is no longer highlighted.
	Repeat	Touch the "Repeat" key to apply a repeat play pattern to the CD. If an MP3 CD is playing, touching "Repeat" alternates between repeating the current song and repeating the current folder. This text will appear on the display. To cancel Repeat mode, touch the "Repeat" key until the key is no longer highlighted.
	Browse	Touch the "Browse" key to display the titles on the CD in list format. Touch the title of a song in the list to begin playing that song. If an MP3 CD is playing, touching the "Browse" key will also list the folders on the disc. Follow the procedure for selecting a song with the screen to choose a folder.

⏮ ⏭ SEEK TRACK:

Push and hold the ⏮ or ⏭ button while the CD is playing to rewind or fast forward the track being played.

Push the ⏮ button while a CD or MP3/WMA CD is playing to return to the beginning of the current track. Push the ⏮ button several times to skip backward several tracks. Push the ⏭ button while a CD or MP3/WMA CD is playing to advance one track. Push the ⏭ button several times to skip forward several tracks. If the last track on a CD is skipped, the first track on the disc is played. If the last track in a folder of an MP3/WMA CD is skipped, the first track of the next folder is played.

⏏ CD eject:

When the ⏏ button is pushed with a CD loaded, the CD will eject and the last source will be played.

If the disc is not removed within 10 seconds, the disc will reload.

USB memory player operation

Connecting a device to the USB connection port:

The USB connection port is located on the lower part of the instrument panel. Insert the USB memory into the port. (See "USB (Universal Serial Bus) connection port" (P.4-74).)

When a compatible storage device is plugged into the port, compatible audio files on the storage device can be played through the vehicle's audio system.

Audio file operation:

AUX button:

Place the ignition switch in the ACC or ON position and push the AUX button to switch to the USB memory input mode. If another audio source is playing and a USB memory is inserted, pushing the AUX button repeatedly will change the system to the USB memory mode.

If the system has been turned off while the USB memory was playing, push the POWER/VOLUME dial to restart the USB memory.

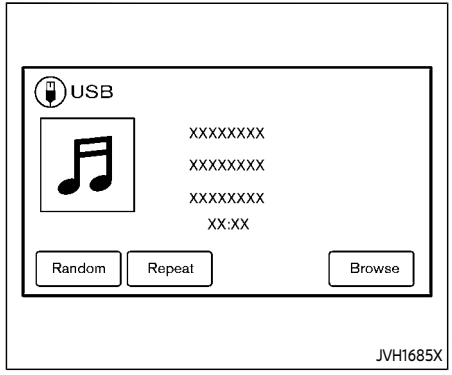

Play information:

Information about the audio files being played is shown on the screen of the vehicle's audio system. Touch "Browse" to display the list of categories that can be used to narrow the search. Touch the name of a song on the screen to begin playing that song.

Seek button:

Push the ⏮ button while an audio file on the USB memory is playing to return to the beginning of the current track. Push the ⏮ button several times to skip backward several tracks.

Push the ⏭ button while an audio file on the USB memory is playing to advance one track. Push the ⏭ button several times to skip forward several tracks. If the last track in a folder on the USB memory is skipped, the first track of the next folder is played.

Random and repeat play mode:

While files on a USB memory are playing, the play pattern can be altered so that songs are repeated or played randomly.

- Random:
  Touch the "Random" key to apply a random play pattern to the USB memory. To cancel Random mode, touch the "Random" key again.
- Repeat:
  Touch the "Repeat" key to apply a repeat play pattern to the USB memory. To cancel Repeat mode, touch the "Repeat" key again.

iPod® player operation

Connecting iPod®:

To connect an iPod® to the vehicle so that the iPod® can be controlled with the audio system controls and touch screen, use the USB connection port located on the lower part of the instrument panel. (See "USB (Universal Serial Bus) connection port" (P.4-74).) Connect the iPod®-specific end of the cable to the iPod® and the USB end of the cable to the USB connection port on the vehicle. If your iPod® supports charging via a USB connection, its battery will be charged while connected to the vehicle with the ignition switch placed in the ACC or ON position.

While connected to the vehicle, the iPod® may only be able to be operated by the vehicle audio controls.

To disconnect the iPod® from the vehicle, remove the USB end of the cable from the USB connection port on the vehicle, then remove the cable from the iPod®.

Compatibility:

The following models are compatible:

- iPod Classic® 5th generation (firmware version 1.3.0 or later)
- iPod Classic® 6th generation (firmware version 2.0.1 or later)
- iPod Classic® 6th (6.1) generation (firmware version 2.0.1 or later)
- iPod Classic® 6th (6.2) generation (firmware version 2.0.4 or later)
- iPod Touch® 2nd generation (firmware version 4.2.1 or later)*
- iPod Touch® 3rd generation (firmware version 5.1.1 or later)
- iPod Touch® 4th generation (firmware version 6.1.3 or later)
- iPod Touch® 5th generation (firmware version 6.1.3 or later)
- iPod nano® - 2nd generation (firmware version 1.1.3 or later)
- iPod nano® - 3rd generation (firmware version 1.1.3 or later)
- iPod nano® - 4th generation (firmware version 1.0.4 or later)
- iPod nano® - 5th generation (firmware version 1.0.2 or later)
- iPod nano® - 6th generation (firmware version 1.2 or later)
- iPod nano® - 7th generation (firmware version 1.2 or later)
- iPhone® 3G (firmware version 4.2.1 or later)
- iPhone® 3GS (firmware version 5.1.1or later)
- iPhone® 4 (firmware version 6.1.3 or later)
- iPhone® 4S (firmware version 6.1.3 or later)
- iPhone® 5 (firmware version 6.1.3 or later)

* Some features of this iPod® may not be fully functional.

Make sure that your iPod® firmware is updated to the version indicated above.

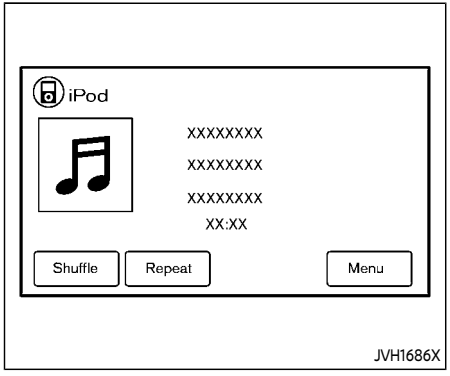

Audio main operation:

Place the ignition switch in the ACC or ON position. Push the AUX button repeatedly to switch to the iPod® mode.

If the system has been turned off while the iPod® was playing, pushing the POWER/VOLUME dial will start the iPod®.

AUX button:

When the AUX button is pushed with the system off and the iPod® connected, the system will turn on. If another audio source is playing and the iPod® is connected, pushing the AUX button repeatedly will change the system to the iPod® mode.

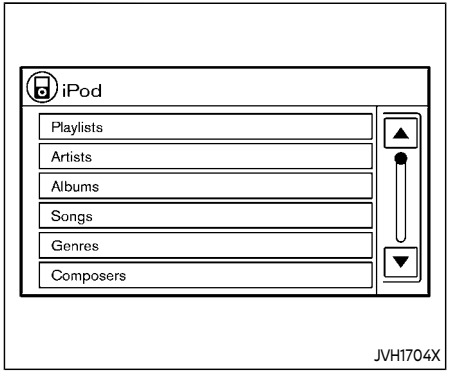

Interface:

The interface for iPod® operation shown on the vehicle's audio system screen is similar to the iPod® interface. Use the touch screen, BACK button or the ENTER AUDIO/TUNE·SCROLL dial to navigate the menus on the screen.

When the iPod® is playing, touch the "Menu" key to bring up the iPod® interface.

Depending on the iPod® model, the following items may be available on the menu list screen. For further information about each item, see the iPod® owner's manual.

- Playlists
- Artists
- Albums
- Songs
- Genres
- Composers
- Audiobooks
- Podcasts
- Update Music Library

Shuffle and repeat play mode:

While the iPod® is playing, the play pattern can be altered so that songs are repeated or played randomly.

- Shuffle:
  Touch the "Shuffle" key to apply a random play pattern to the iPod®. To cancel the Shuffle mode, touch the "Shuffle" key again.
- Repeat:
  Touch the "Repeat" key to apply a repeat play pattern to the iPod®. To cancel Repeat mode, touch the "Repeat" key again.

⏮ ⏭ Seek button:

Push the ⏮ or ⏭ button to skip backward or forward one track.

Push and hold the ⏮ or ⏭ button for 1.5 seconds while a track is playing to rewind or fast forward the track being

played. The track plays at an increased speed while rewinding or fast forwarding. When the button is released, the track returns to normal play speed.

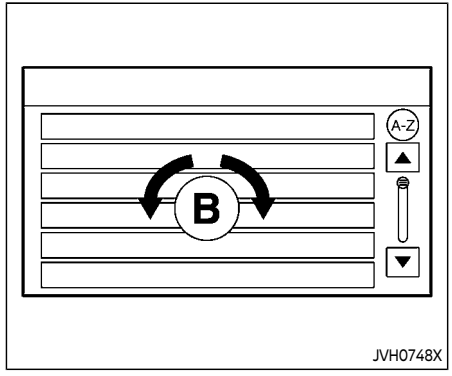

Scrolling menus:

While navigating long lists of artists, albums or songs in the music menu, it is possible to scroll the list by the first character in the name. To activate character indexing, touch the "A-Z" key in the upper right corner of the screen. Turn the ENTER AUDIO/TUNE·SCROLL dial to choose the number or letter to jump to in the list and then push the ENTER AUDIO/TUNE·SCROLL dial.

If no character is selected after a few seconds, the display returns to normal.

Bluetooth® streaming audio

If you have a compatible Bluetooth® audio device that is capable of playing audio files, the device can be connected to the vehicle's audio system so that the audio files on the device play through the vehicle's speakers.

Regulatory information:

Bluetooth® trademark:

Bluetooth® is a trademark owned by Bluetooth SIG, Inc. and licensed to Robert Bosch GmbH.

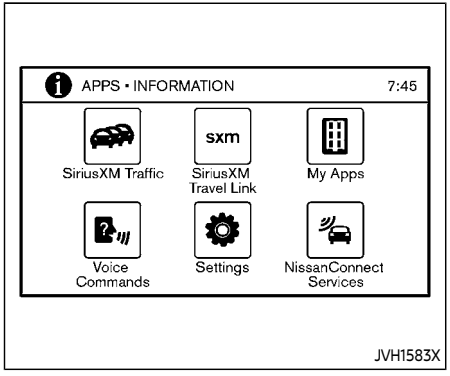

Example

Connecting Bluetooth® audio:

To connect your Bluetooth® audio device to the vehicle, follow the procedure below:

1. Push the APPS·i button.
2. Touch the "Settings" key.
3. Touch the "Phone & Bluetooth" key.

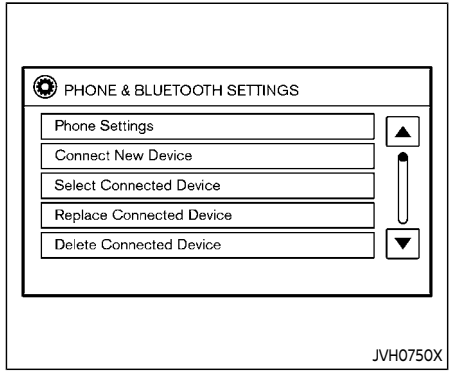

4. Touch the "Connect New Device" key.
5. The system acknowledges the command and asks you to initiate connecting from the phone handset. The connecting procedure of the cellular phone varies according to each cellular phone model. See the cellular phone owner's manual for details. You can also visit www.nissanusa.com/bluetooth or www.nissan.ca/bluetooth for instructions on connecting NISSAN recommended cellular phones.

Audio main operation:

To switch to the Bluetooth® audio mode, push the AUX button repeatedly until the Bluetooth® audio mode is displayed on the screen.

The controls for the Bluetooth® audio are displayed on the screen.

AUX device player operation

The AUX input jack is located on the lower part of the instrument panel. (See "AUX (Auxiliary) input jack" (P.4-75).) The AUX input jack accepts any standard analog audio input such as from a portable cassette tape/CD player, MP3 player or a laptop computer. Push the AUX button to play a compatible device plugged into the AUX input jack.

NISSAN strongly recommends using a stereo mini plug cable when connecting your music device to the audio system. Music may not play properly when a monaural cable is used.

USB (Universal Serial Bus) CONNECTION PORT

WARNING

Do not connect, disconnect or operate the USB device while driving. Doing so can be a distraction. If distracted you could lose control of your vehicle and cause an accident or serious injury.

CAUTION

- **Do not force the USB device into the USB connection port. Inserting a USB device tilted or upside-down into the port may damage the port. Make sure that the USB device is connected correctly to the USB connection port.**
- **Do not grab the USB connection port cover (if so equipped) when pulling a USB device out of the port. This could damage the port and the cover.**
- **Do not leave a USB cable in a place where it can be pulled unintentionally. Pulling the cable may damage the port.**

Refer to your device manufacturer's owner information regarding the proper use and care of the device.

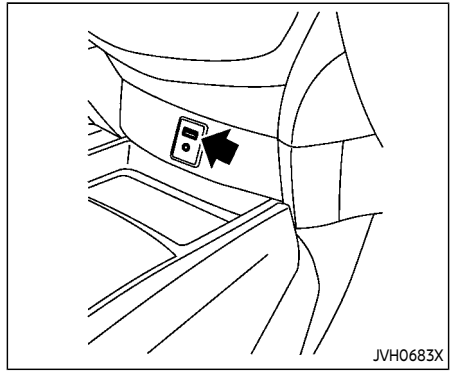

The USB connection port is located on the lower part of the instrument panel. Insert USB memory or iPod® connector into this port.

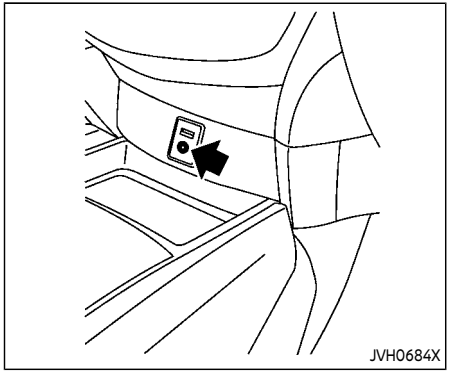

AUX (Auxiliary) INPUT JACK

The AUX input jack is located on the lower part of the instrument panel. The AUX input jack accepts any standard analog audio input such as from a portable cassette tape/CD player, MP3 player or laptop computer.

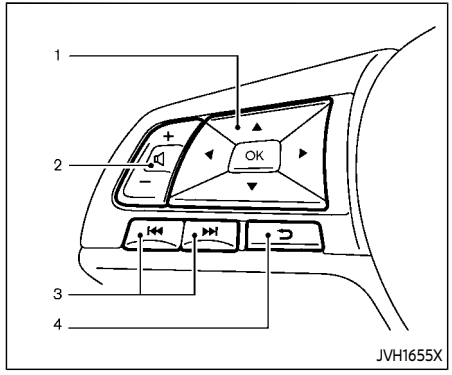

1. Menu control buttons/OK button
2. Volume control buttons
3. Tuning buttons
4. Back button

STEERING WHEEL SWITCH FOR AUDIO CONTROL

The audio system can be operated using the controls on the steering wheel.

Menu control buttons/OK button

Push the ◀ / ▶ buttons to switch the vehicle information display to audio mode. Push the OK button until the preferred available audio source is selected.

Volume control buttons

Push the + or − button to increase or decrease the volume.

▶▶| |◀◀ Tuning buttons (models without navigation system)

Availability of functions may vary depending on the media and device.

AM and FM radio:

- Push the ▶▶| / |◀◀ button for less than 1.5 seconds to select the next or the previous preset station.
- Push the ▶▶| / |◀◀ button for more than 1.5 seconds to seek up or down to the next station.

SXM operation (if so equipped):

- Push the ▶▶| / |◀◀ button for less than 1.5 seconds to select the next or the previous preset channel.
- Push the ▶▶| / |◀◀ button for more than 1.5 seconds to select the next or the previous available channel.

iPod®:

- Push the ▶▶| / |◀◀ button for less than 1.5 seconds to select the next or the previous track.

CD or Bluetooth® audio:

- Push the ▶▶| / |◀◀ button for less than 1.5 seconds to select the next or the previous track.
- Push the ▶▶| / |◀◀ button for more than 1.5 seconds to fast forward or rewind the track being played.

CD-MP3 or USB memory:

- Push the ▶▶| / |◀◀ button for less than 1.5 seconds to select the next or the previous track.
- Push the ▶▶| / |◀◀ button for more than 1.5 seconds to select the next or the previous folder.

▶▶| |◀◀ Tuning buttons (models with navigation system)

Availability of functions may vary depending on the media and device.

AM and FM radio:

- Push the ▶▶| / |◀◀ button for less than 1.5 seconds to select the next or the previous preset station and show a list of the preset stations.
- Push the ▶▶| / |◀◀ button for more than 1.5 seconds to seek up or down to the next station.

SXM operation (if so equipped):

- Push the ▶▶| / |◀◀ button for less than 1.5 seconds to select the next or the previous preset channel.
- Push the ▶▶| / |◀◀ button for more than 1.5 seconds to go to the next or previous category.

CD, iPod®, USB memory or Bluetooth® audio:

- Push the ▶▶| / |◀◀ button for less than 1.5 seconds to select the next or the previous track.
- Push the ▶▶| / |◀◀ button for more than 1.5 seconds to fast forward or rewind the track being played.

Back button (models with navigation system)

Push the back button to return to previous screen or cancel the current selection.

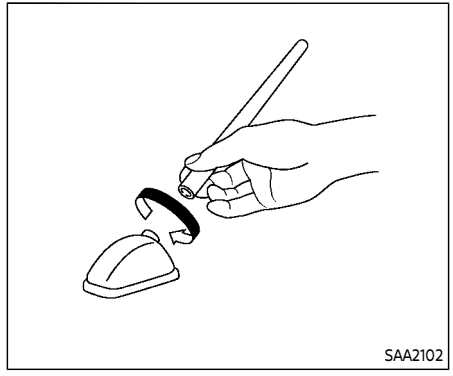

Type A (if so equipped)

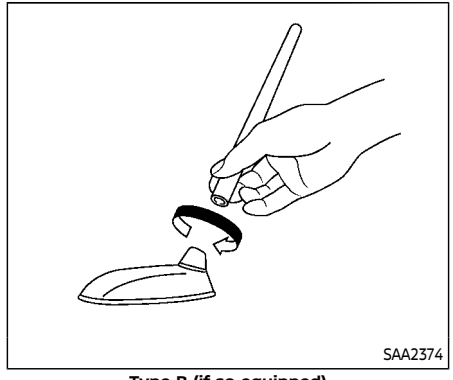

Type B (if so equipped)

ANTENNA

To remove the antenna, hold the bottom of the antenna and turn it counterclockwise.

To install the antenna, turn the antenna clockwise and tighten.

CAUTION

- **To avoid damaging or deforming the antenna, be sure to remove the antenna under the following conditions.**
  - **The vehicle enters a garage with a low ceiling.**
  - **The vehicle is covered with a car cover.**
- **Be sure that antenna is removed before the vehicle enters an automatic car wash.**
- **Always properly tighten the antenna rod during installation. Otherwise, the antenna rod may break during vehicle operation.**

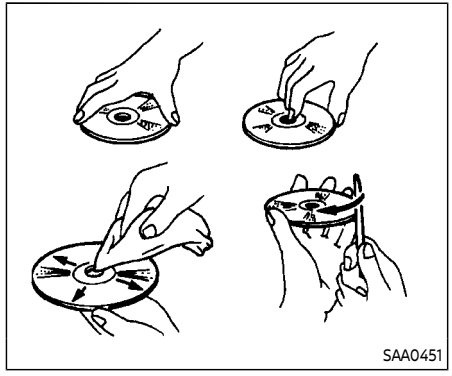

CD/USB MEMORY CARE AND CLEANING

CD

- Handle a CD by its edges. Never touch the surface of the disc. Do not bend the disc.
- Always place the discs in the storage case when they are not being used.
- To clean a disc, wipe the surface from the center to the outer edge using a clean, soft cloth. Do not wipe the disc using a circular motion.

  Do not use a conventional record cleaner or alcohol intended for industrial use.
- A new disc may be rough on the inner and outer edges. Remove the rough edges by rubbing the inner and outer edges with the side of a pen or pencil as illustrated.

USB memory

- Do not touch the terminal portion of the USB memory.
- Do not place heavy objects on the USB memory.
- Do not store the USB memory in very humid locations.
- Do not expose the USB memory to direct sunlight.
- Do not spill any liquids on the USB memory.

Refer to the USB memory owner's manual for the details.

NISSANCONNECT℠ MOBILE APPS SMARTPHONE INTEGRATION (if so equipped)

This vehicle is equipped with smartphone Integration technology. This allows many compatible smartphone applications to be displayed and easily controlled through the vehicle's touch screen.

NOTE:

A compatible smartphone and registration is required to use mobile applications or to access connected features of certain vehicle applications.

REGISTERING WITH NISSANCONNECT℠ MOBILE APPS

To use the smartphone Integration feature, it is necessary for the user to register. In order to register, visit the NissanConnect℠ website and sign up or create an account through the prompts on the NissanConnect℠ Mobile Apps. Once registered, download the NissanConnect℠ Mobile Apps from your compatible phone's application download source and then log into the application. If you already have an account created through the App, please log in.

NissanConnect℠ website:

For U.S.

www.nissanusa.com/connect/

For Canada

www.nissan.ca/nissanconnect (English)

www.nissan.ca/nissanconnect/fr (French)

CONNECT PHONE

To use this feature, a compatible smartphone must be connected via Bluetooth® or USB connection port to the vehicle. For more information on connecting your phone, see "Bluetooth® Hands-Free Phone System (models with navigation system)" (P.4-93).

NOTE:

- **For iPhone®, NissanConnect℠ Mobile Apps REQUIRES the phone to be plugged in via USB connection port.**
- **For Android phones, NissanConnect℠ Mobile Apps REQUIRES the phone to be paired via Bluetooth®.**

APPLICATION DOWNLOAD

Once connected, the NissanConnect℠ Mobile Apps will search your phone to determine which compatible applications are currently installed. The user will then choose which apps they want to bring into their vehicle from the list of apps within the "Manage My Apps" section of the NissanConnect℠ Mobile Apps on their smartphone. The vehicle will then download the in-vehicle interface for each of these compatible applications. Once downloaded, the user can access their selected smartphone applications through the vehicle touch screen. For more information on application availability see NissanConnect℠ website.

NissanConnect℠ website:

For U.S.

www.nissanusa.com/connect/

For Canada

www.nissan.ca/nissanconnect (English)

www.nissan.ca/nissanconnect/fr (French)

NISSANCONNECT[SM] SERVICES (if so equipped)

NissanConnect[SM] Services is a suite of telematics tools that provide emergency preparedness, remote access, customizable alerts and convenience services. This feature is an option on navigation system equipped vehicles. For additional information, refer to the separate Navigation System Owner's Manual.

SIRI® EYES FREE

GENERAL INFORMATION

Apple Siri® Eyes Free personal assistant can be accessed from the vehicle. Siri® Eyes Free can be accessed in Siri® Eyes Free mode to reduce user distraction. In this mode, Siri® Eyes Free is available for interaction by voice control. After connecting a compatible Apple device by using Bluetooth®, Siri® Eyes Free can be activated using the button on the steering wheel.

Siri® is a trademark of Apple Inc., registered in the U.S. and other countries.

INFO:

- Some Siri® Eyes Free functions, such as opening apps, may not be available during driving.
- For best results, always update your device to the latest software version.
- Keep the interior of the vehicle as quiet as possible. Close the windows to eliminate the surrounding noises (traffic noises, vibration sounds, etc.), which may prevent the system from recognizing the voice commands correctly.
- For functions that can be used in Siri® Eyes Free, please refer to the Apple website.

REQUIREMENTS

Siri® is available on the iPhone® 4S or later. Devices released before iPhone® 4S are not supported by the Siri® Eyes Free system.

Visit www.apple.com/ios/siri for details about device compatibility.

Siri® must be enabled on the phone. Please check phone settings.

If the device has a lock screen, Siri® must be accessible from the lock screen. Please check phone settings.

For best results, always update your device to the latest software version.

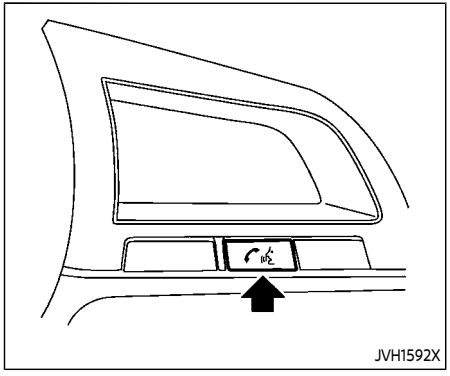

SIRI® EYES FREE ACTIVATION

Siri® Eyes Free function can be activated using the button on the steering wheel.

1. Connect a Siri® Eyes Free enabled iPhone® to the vehicle. (See "Connecting procedure" (P.4-96) or "Initialization" (P.4-86).)
2. After the Bluetooth® connection is established, push and hold the button to activate the Siri® Eyes Free function.

   Depending on the model, Siri® Eyes Free activation option ("Short Press" or "Long Press") can be selected after connecting the iPhone®. The activation option can also be changed from the Phone or Bluetooth® settings menu. (See "Changing Siri® Eyes Free Settings (models with navigation system)" (P.4-80) or "Changing Siri® Eyes Free Settings (models without navigation system)" (P.4-81).)

OPERATING SIRI® EYES FREE

1. Push or push and hold the button.
2. Speak your command and then listen to the Siri® Eyes Free reply.

After starting Siri® Eyes Free, push the button again within five seconds of the end of the Siri® Eyes Free announcement to extend the session.

Example 1 - Playing music

1. Push or push and hold the button.
2. Say "Play (artist name, song name, etc.)".
3. Your vehicle will automatically change to Bluetooth® audio or iPod® mode* when the music starts playing. Mode selection is determined by the phone.

   *: If the iPhone® is also connected with the USB cable.

If the audio track does not start playing automatically after Siri® Eyes Free ends, try changing the track or audio source to resume playback.

NOTE:

For best results, use the native music app. Performance of music control function while using Podcasts, Audiobook or other third party music apps may vary and is controlled by the iPhone®.

Example 2 - Replying to text messages

1. If a compatible iPhone® is connected and "Show Notifications" of the iPhone® settings is enabled, the vehicle will display a notification for new incoming text messages.
2. After reading the message, push or push and hold the button to reply using Siri® Eyes Free.
3. After a beep sounds, say "Text message" or a similar command to reply using Siri® Eyes Free.

CHANGING SIRI® EYES FREE SETTINGS (models with navigation system)

Settings for Siri® Eyes Free can be found in the Bluetooth® settings menu.

1. Push the APPS·i button.
2. Touch the "Settings" key.
3. Touch the "Phone & Bluetooth" key.
4. Touch the "Phone settings" key.

5. Touch the “Start Siri by” key.
6. Select “Short Press” or “Long Press” to set the activation.

CHANGING SIRI® EYES FREE SETTINGS (models without navigation system)

Settings for Siri® Eyes Free can be found in the Bluetooth® settings menu.

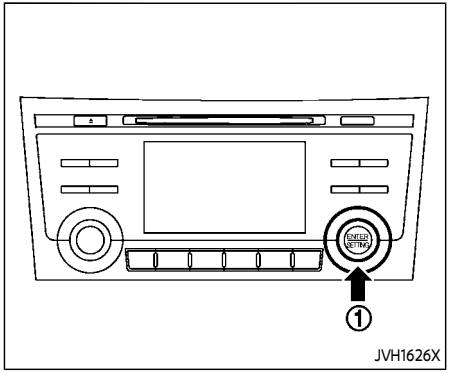

1. Push the ENTER SETTING button ①.
2. Use the ENTER SETTING button ① to select “Bluetooth” and then push the ENTER SETTING button ①.
3. Use the ENTER SETTING button ① to select “Siri” and then push the ENTER SETTING button ①.
4. Select “Short Press” or “Long Press” using the ENTER SETTING button ① and then push the ENTER SETTING button ①.

TROUBLESHOOTING GUIDE

Symptom	Cause and Countermeasure
Cannot access Siri® Eyes Free from the switch on the steering wheel	Check if a Bluetooth® connection is established between the iPhone® and the system.
	Check if Siri® is enabled on the device. On your phone, go to Siri® setting.
	Check that Siri® can be accessed from the device lock screen. This can be set in the settings menu of your phone.
	Check the settings for Siri® Eyes Free activation on the vehicle audio system. If the setting is “Long Press”, you must push and hold the button on the steering wheel for more than 1.5 seconds to start Siri® Eyes Free. If the setting is “Short Press”, a short push and release of the button should start Siri® Eyes Free.
Audio source does not change automatically to iPod® or Bluetooth® Audio mode	For best results, use the native music app. Performance of music control function while using Podcasts, Audiobook or other third party music apps may vary.
	For best results, play media already stored on your device. Streaming music or playback from cloud storage may degrade performance.
	Models with navigation system: Switch the source manually by pushing the AUX button on the vehicle audio system or the menu control buttons/OK button on the steering wheel. Models without navigation system: Switch the source manually by pushing the iPod MENU or MEDIA button on the vehicle audio system or the menu control buttons/OK button on the steering wheel.
Play, pause, next track, previous track or play timer does not work	For best results, use the native music app. Performance of music control function while using Podcasts, Audiobook or other third party music apps may vary and is controlled by the device.
Cannot hear any music/audio being played back from a connected iPhone®	Check that the audio source is set to Bluetooth® Audio or iPod® mode. A USB connection is required for iPod® mode.
Cannot hear map turn-by-turn direction guidance from a connected iPhone®	Check that the audio source is set to Bluetooth® Audio or iPod® mode. A USB connection is required for iPod® mode.
Cannot receive text message notifications on the vehicle audio system	Check if “Show Notifications” is enabled on your phone. On your phone, go to Bluetooth® settings. Find the device name, like “My Car”. Touch the icon on your phone. Turn on “Show Notifications”.
Cannot reply to text message notifications using Siri® Eyes Free	After receiving an incoming text message, follow the on-screen guidance. Push or push and hold the button on the steering wheel for Siri® Eyes Free. After Siri® Eyes Free starts, say “Text Message”.

CAR PHONE OR CB RADIO

When installing a car phone or a CB radio in your vehicle, be sure to observe the following precautions, otherwise the new equipment may adversely affect the electronic control modules and electronic control system harness.

WARNING

- **A cellular phone should not be used for any purpose while driving so full attention may be given to vehicle operation. Some jurisdictions prohibit the use of cellular phones while driving.**
- **If you must make a call while your vehicle is in motion, the hands-free cellular phone operational mode (if so equipped) is highly recommended. Exercise extreme caution at all times so full attention may be given to vehicle operation.**
- **If a conversation in a moving vehicle requires you to take notes, pull off the road to a safe location and stop your vehicle before doing so.**

CAUTION

- **Keep the antenna as far away as possible from the electronic control modules.**
- **Keep the antenna wire more than 8 in (20 cm) away from the electronic control system harness. Do not route the antenna wire next to any harness.**
- **Adjust the antenna standing-wave ratio as recommended by the manufacturer.**
- **Connect the ground wire from the CB radio chassis to the body.**
- **For details, it is recommended you visit a NISSAN dealer.**

Bluetooth® HANDS-FREE PHONE SYSTEM (models without navigation system)

WARNING

- **Use a phone after stopping your vehicle in a safe location. If you have to use a phone while driving, exercise extreme caution at all times so full attention may be given to vehicle operation.**
- **If you are unable to devote full attention to vehicle operation while talking on the phone, pull off the road to a safe location and stop your vehicle.**

CAUTION

To avoid draining the vehicle battery, use a phone after starting the engine.

Your vehicle is equipped with the Bluetooth® Hands-Free Phone System. If you have a compatible Bluetooth® enabled cellular phone, you can set up the wireless connection between your cellular phone and the in-vehicle phone module. With Bluetooth® wireless technology, you can make or receive a hands-free telephone call with your cellular phone in the

vehicle.

Once your cellular phone is connected to the in-vehicle phone module, no other phone connecting procedure is required. Your phone is automatically connected with the in-vehicle phone module when the ignition switch is placed in the ACC or ON position with the previously connected cellular phone turned on and carried in the vehicle.

NOTE:

Some devices require the user to accept connections to other Bluetooth® devices. If your phone does not connect automatic ally to the system, consult the phone's owner's manual for details on device operation.

You can connect up to five different Bluetooth® cellular phones to the in-vehicle phone module. However, you can talk on only one cellular phone at a time.

Before using the Bluetooth® Hands-Free Phone System, refer to the following notes.

- Set up the wireless connection between a compatible cellular phone and the in-vehicle phone module before using the Hands-Free Phone System.
- Some Bluetooth® enabled cellular phones may not be recognized by the in-vehicle phone module. Please visit www.nissanusa.com/bluetooth or www.nissan.ca/bluetooth for a recommended phone list.
- You will not be able to use a hands-free phone under the following conditions:
  - Your vehicle is outside of the cellular service area.
  - Your vehicle is in an area where it is difficult to receive a cellular signal; such as in a tunnel, in an underground parking garage, near a tall building or in a mountainous area.
  - Your cellular phone is locked to prevent it from being dialed.
- When the radio wave condition is not ideal or ambient sound is too loud, it may be difficult to hear the other person's voice during a call.
- Do not place the cellular phone in an area surrounded by metal or far away from the in-vehicle phone module to prevent tone quality degradation and wireless connection disruption.
- While a cellular phone is connected through the Bluetooth® wireless connection, the battery power of the cellular phone may discharge quicker than usual. The Bluetooth® Hands-Free Phone System cannot charge cellular phones.
- If the Bluetooth® Hands-Free Phone System seems to be malfunctioning, visit www.nissanusa.com/bluetooth or www.nissan.ca/bluetooth for troubleshooting help.
- Some cellular phones or other devices may cause interference or a buzzing noise to come from the audio system speakers. Storing the device in a different location may reduce or eliminate the noise.
- Refer to the cellular phone owner's manual regarding the telephone charges, cellular phone antenna and body, etc.

REGULATORY INFORMATION

FCC Regulatory information

- CAUTION: To maintain compliance with FCC's RF exposure guidelines, use only the supplied antenna. Unauthorized antenna, modification, or attachments could damage the transmitter and may violate FCC regulations.
- Operation is subject to the following two conditions:
  1) this device may not cause interference and

2) this device must accept any interference, including interference that may cause undesired operation of the device.

IC Regulatory information

- Operation is subject to the following two conditions: (1) this device may not cause interference, and (2) this device must accept any interference, including interference that may cause undesired operation of the device.
- This Class B digital apparatus meets all requirements of the Canadian Interference-Causing Equipment Regulations.

Bluetooth® trademark

Bluetooth® is a trademark owned by Bluetooth SIG, Inc., and licensed to Visteon Corporation.

USING THE SYSTEM

The voice recognition system allows hands-free operation of the Bluetooth® Hands-Free Phone System.

If the vehicle is in motion, some commands may not be available so full attention may be given to vehicle operation.

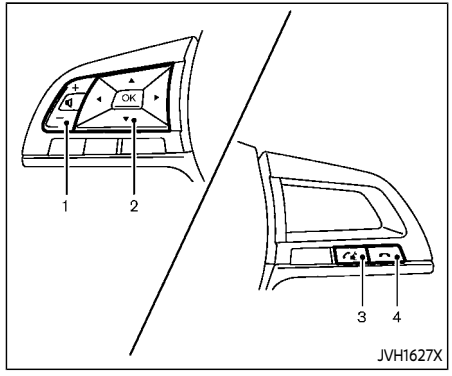

Control buttons and microphone

Control buttons:

The control buttons for the Bluetooth® Hands- Free Phone System are located on the steering wheel.

1. Volume control buttons
2. Menu control buttons/OK button

   While using the voice recognition system, push the ▼ / ▲ buttons to manually control the phone system.
3. button

   Push the button to initiate a voice recognition operation session or answer an incoming call.

INFO:

If the "Siri" on the Bluetooth® settings menu is set to "Short Press", pushing and holding the button initiates a voice recognition operation session for Hands-Free Phone operation. (See "Bluetooth® settings" (P.4-92).)

You can also use the button to interrupt the system feedback and give a command at once. See "Giving voice commands" (P.4-87) in this section for more information.

4. button

   Push the button to reject the call.

   While the voice recognition system is active, push and hold the button to quit the voice recognition system at any time.

Microphone:

Microphone is located near the map lights.

Manual control:

While using the Voice Recognition system, it is also possible to select menu options manually by using the steering wheel controls instead of speaking voice commands. To activate the manual control mode, push the button on the steering wheel to access the phone menu and then push the menu control buttons.

The manual control mode does not allow dialing a phone number by digits. The user may select an entry from the Phonebook or Recent Calls lists. To reactivate Voice Recognition, exit the manual control mode by pushing and holding the button. At that time, pushing the button will start the Bluetooth® Hands-Free Phone System.

Choosing a language

You can interact with the Bluetooth® Hands-Free Phone System using several languages that are available. For operations to change the language, see "Audio main operation" (P.4-48) or "Audio main operation" (P.4-56).

Changing voice feedback volume

If you want to adjust the volume of the voice feedback, push the volume control buttons on the steering wheel while being provided with feedback. You can also use the Power/VOL dial on the control panel.

Initialization

When the ignition switch is placed in the ACC or ON position, voice recognition is initialized, which takes a few seconds. If the button is pushed before the initialization completes, the system will announce "Hands-free phone system not ready" and will not react to voice commands.

Connecting procedure:

NOTE:

The connecting procedure must be performed when the vehicle is stationary. If the vehicle starts moving during the procedure, the procedure will be cancelled.

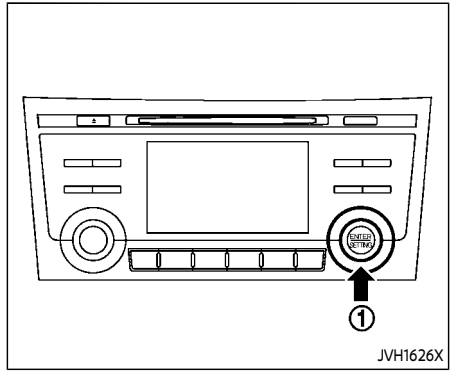

To connect a phone to the Bluetooth® Hands-Free Phone System;

1. Push the ENTER SETTING button ①.
2. Use the ENTER SETTING button ① to select "Bluetooth" and then push the ENTER SETTING button ①.
3. Select "Add Phone" and then push the ENTER SETTING button ①.
4. When a message with a PIN appears on the screen, operate the Bluetooth® phone to enter the PIN.

The connecting procedure varies according to each phone. See the phone's owner's manual for details.

Giving voice commands

To operate voice recognition, push and release the button located on the steering wheel. After the tone sounds, speak a command.

The command given is picked up by the microphone, and voice feedback is given when the command is accepted.

- If you need to hear the available commands for the current menu again, say "Help" and the system will repeat them.
- If a command is not recognized, the system announces, "Command not recognized. Please try again." Make sure the command is said exactly as prompted by the system and repeat the command in a clear voice.
- If you want to go back to the previous command, you can say "Go back" or "Correction" any time the system is waiting for a response.
- You can cancel a command when the system is waiting for a response by saying, "Cancel" or "Quit". The system announces "Cancel" or "Quit" and ends the voice recognition operation session. You can also push and hold the button on the steering wheel at any time to end the voice recognition operation session. Whenever the voice recognition operation session is cancelled, a double beep is played to indicate you have exited the system.
- If you want to adjust the volume of the voice feedback, push the volume control buttons on the steering wheel while being provided with feedback. You can also use the Power/VOL dial on the control panel.

Voice Prompt Interrupt:

In most cases you can interrupt the voice feedback to speak the next command by pushing the button on the steering wheel. After interrupting the system, wait for a beep before speaking your command.

One Shot Call:

To use the system faster, you may speak the second level commands with the main menu command on the main menu. For example, push the button and after the tone say, "Call Redial".

Operating tips:

To get the best performance out of the voice recognition system, observe the following:

- Keep the interior of the vehicle as quiet as possible. Close the windows to eliminate surrounding noises (traffic noises, vibration sounds, etc.), which may prevent the system from recognizing voice commands correctly.
- Wait until the tone sounds before speaking a command. Otherwise, the command will not be received properly.
- Start speaking a command within five seconds after the tone sounds.
- Speak in a natural voice without pausing between words.

Voice commands

Voice commands can be used to operate the Bluetooth® Hands-Free Phone System. Push the button to bring up the phone command menu. The available options are:

- Call
- Phonebook
- Recent Calls
- Messaging (if available)
- Select Phone

Call:

For more information on the "Call" command, see "Making a call" (P.4-89).

Phonebook:

The following commands are available under "Phonebook":

- (A Name)

  Say a name in the phonebook to bring up a list of options for that phonebook entry. The system will say the name it interpreted based on the voice command provided. If the name is incorrect, say "Correction" to hear another name.

  Once the correct phonebook entry is identified, say "Dial" to dial the number or "Send Text" to send a text message to that number. Say "Record Name" to record a name for the phonebook entry. Say "Delete Recording" to delete a recorded name for the phonebook entry.
- List Names

  Speak this command to have the system list the names in the phonebook one by one alphabetically. Say "Dial" to dial the number of the current name or "Send Text" to send a text message to that number. Say "Next Entry" or "Previous Entry" to move through the list alphabetically. Say "Record Name" to record a name for the current phonebook entry. Say "Delete Recording" to delete a recorded name for the current phonebook entry.
- Transfer Entry

  This command can be used to transfer multiple contacts at a time. To enable manual contact transfer capability, set "Phonebook Download" to "Off" in the Setting menu. The ability to transfer contacts via the OPP Bluetooth® profile depends on your mobile phone. For additional information, refer to your phone's owner's manual.
- Delete Entry

  Speak this command to delete an entry in the phonebook. Choose an entry to delete by speaking the desired name or say "List Names".

Recent Calls:

The following commands are available under "Recent Calls":

- Incoming Calls

  Speak this command to list the last five incoming calls to the vehicle. If the call is from an entry in the phonebook, the name will be displayed. Otherwise, the phone number of the incoming call will be displayed.

  Say "Dial" to call the number or "Send Text" to send a text message to that number. Say "Next Entry" or "Previous Entry" to move through the list of incoming calls.
- Missed Calls

  Speak this command to list the last five missed calls to the vehicle. If the call is from an entry in the phonebook, the name will be displayed. Otherwise, the phone number of the missed call will be displayed.

  Say "Dial" to call the number or "Send Text" to send a text message to that number. Say "Next Entry" or "Previous Entry" to move through the list of missed calls.
- Outgoing Calls

  Speak this command to list the last five outgoing calls from the vehicle. If the call was to an entry in the phonebook, the name will be displayed. Otherwise, the phone number of the outgoing call will be displayed.

  Say "Dial" to call the number or "Send Text" to send a text message to that number. Say "Next Entry" or "Previous Entry" to move through the list of outgoing calls.
- Redial

  Speak this command to call the last number dialed.
- Call Back

  Speak this command to call the number of the last incoming call to the vehicle.

Messaging (if so equipped):

Speak this command to access text messaging functions. For more informa-

tion on these commands, see "Text messaging" (P.4-90).

Select Phone:

Speak this command to select a phone to use from a list of those phones connected to the vehicle.

Making a call

To make a call from a phone connected to the vehicle's Bluetooth® Hands-Free Phone System:

1. Push the button.
2. The system will prompt you for a command. Say "Call".
3. Select one of the available voice commands to continue:
   - (A Name)

     Speak the name of a phonebook entry to place a call to that entry. The system will respond with the name it interpreted from your command and will prompt you to confirm that the name is correct. Say "Dial" to initiate the call or "Correction" to return to the previous screen.
   - List Names

     Select this command to call a phone number that is stored in the phonebook.
   - Phone Number

     Speak this command to place a call by inputting numbers.

     For 7- and 10-digit phone numbers, speak the numbers. When finished, say "Dial" to initiate the call. Say "Correction" at any time in the process to correct a misspoken or misinterpreted number.

     For phone numbers with more digits or special characters, say "Special Number", then speak the digits. Up to 24 digits can be entered. Available special characters are "Star", "Pound", "Plus" and "Pause". When finished, say "Dial" to initiate the call. Say "Correction" at any time in the process to correct a misspoken or misinterpreted number or character.
   - Redial

     Speak this command to dial the number of the last outgoing call. The system will display "Redial". The name of the phonebook entry will be displayed if it is available. Otherwise, the number being redialed will be displayed.
   - Call Back

     Speak this command to dial the number of the last incoming call. The system will display "Call Back". The name of the phonebook entry will be displayed if it is available. Otherwise, the number being called back will be displayed.

Receiving a call

When a call is received by the phone connected to the vehicle's Bluetooth® Hands-Free Phone System, the call information is displayed on either the vehicle information display or both the vehicle information display and the color display.

Push the button to accept the call. Push the button to reject the call.

During a call

While a call is active, push the button to access additional options. Speak one of the following commands:

- Send

  Speak this command followed by the digits to enter digits during the phone call.
- Mute On or Mute Off

  Speak the command to mute or unmute the system.
- Transfer Call

  Speak this command to transfer the call to the handset. To transfer the call back from the handset to the Bluetooth® Hands-Free Phone System, push the button and confirm when prompted.

If supported by the phone, the Bluetooth® Hands-Free Phone System allows for call waiting functionality. If a call is received while another call is already active, a message will be displayed on the screen. Push the button to hold the active call and switch to the second call. Push the button to reject the second call.

While the second call is active, pushing the button will allow the same commands that are available during any call as well as two additional commands:

- Switch Call
  Speak this command to hold the second call and switch back to the original call.
- End Other Call
  Speak this command to stay with the second call and end the original call.

Push the button to accept the call. Push the button to reject the call.

Ending a call

To end an active call, push the button.

Text messaging (if so equipped)

WARNING

- **Laws in some jurisdictions may restrict the use of some of the applications and features, such as social networking and texting.**
- **Laws in some jurisdictions may restrict the use of "Text-to-Speech". Check local regulations before using this feature.**
- **Use the text messaging feature after stopping your vehicle in a safe location. If you have to use the feature while driving, exercise extreme caution at all times so full attention may be given to vehicle operation.**
- **If you are unable to devote full attention to vehicle operation while using the text messaging feature, pull off the road to a safe location and stop your vehicle.**

NOTE:

- **This feature is automatically disabled if the connected device does not support the Message Access Profile (MAP). See the phone's owner's manual for details and instructions.**
- **Many phones may require special permission to enable text messaging. Check the phone's screen during Bluetooth® pairing. For some phones, you may need to enable "Notifications" in the phone's Bluetooth® menu for text messages to appear on the vehicle audio system. See the phone's owner's manual for details. Text message integration requires that the phone support MAP (Message Access Profile) for both receiving and sending text messages. Some phones may not support all text messaging features. Refer to www.nissanusa.com/bluetooth or www.nissan.ca/bluetooth for compatibility information, as well as your device's owner's manual.**

The system allows for the sending and receiving of text messages through the vehicle interface.

Sending a text message:

1. Push the button.
2. Say "Phone".
3. Say "Send Text".
4. The system will provide a list of available commands in order to determine the recipient of the text message. Choose from the following:

- To (a name)
- Enter Number
- Incoming Calls
- Outgoing Calls
- Missed Calls

If "Incoming Calls", "Outgoing Calls", or "Missed Calls" is selected, the following additional commands will be displayed:

- Send Text
- Next Entry
- Previous Entry

For more information about these options, see "Voice commands" (P.4-87).

5. Once a recipient is chosen, the system prompts for which message to send. Five predefined messages are available as well as three custom messages. To choose one of the predefined messages, speak one of the following:
   - "Driving, can't text"
   - "Call me"
   - "On my way"
   - "Running late"
   - "Okay"
   - "Yes"
   - "No"
   - "Where are you?"
   - "When?"
   - "Custom Messages"

   To send one of the custom messages, say "Custom Messages". If more than one custom message is stored, the system will prompt for the number of the desired custom message. For more information on setting and managing custom text messages, see "Bluetooth® settings" (P.4-92).

Reading a received text message:

1. Push the button.
2. Say "Phone".
3. Say "Read Text".

The text message, sender and delivery time are shown on the screen. Use the menu control buttons on the steering wheel to scroll through all text messages if more than one are available. Push the button to exit the text message screen. Push the button to access the following options for replying to the text message:

- Call Back
  Speak this command to call the sender of the text message using the Bluetooth® Hands-Free Phone System.
- Send Text
  Speak this command to send a text message response to the sender of the text message.
- Read Text
  Speak this command to read the text message again.
- Previous Text
  Speak this command to move to the previous text message (if available).
- Next Text
  Speak this command to move to the next text message (if available).

NOTE:

- **Text messages are only displayed if the vehicle speed is less than 5 MPH (8 km/h).**
- **iPhone® can only send text messages via Siri® Eyes Free.**

Making custom messages with Siri® Eyes Free:

If a connected iPhone® is equipped with Siri®, it can also be used to create custom messages. (See "Siri® Eyes Free" (P.4-79).)

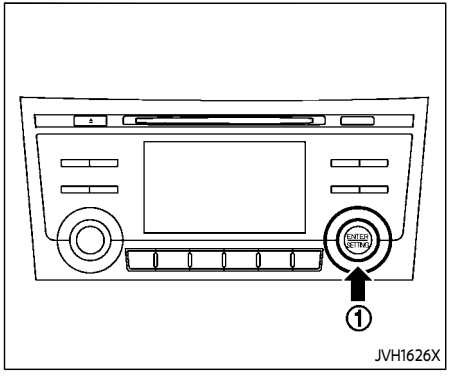

Bluetooth® settings

To access and adjust the settings for the Bluetooth® Hands-Free Phone System:

1. Push the ENTER SETTING button ①.
2. Use the ENTER SETTING button ① to select "Bluetooth" and then push the ENTER SETTING button ①:
   - Bluetooth

     Select "ON" or "OFF" to turn the vehicle's Bluetooth® system on or off.
   - Add Phone

     To connect a phone to the system, see "Initialization" (P.4-86).
   - Delete Phone

     Select to delete a phone from the displayed list. The system will ask to confirm before deleting the phone.
   - Replace Phone

     Select to replace a phone from the displayed list. When a selection is made, the system will ask to confirm before proceeding. The recorded phonebook for the phone being deleted will be saved as long as the new phone's phonebook is the same as the old phone's phonebook.
   - Select Phone

     Select to connect to a previously connected phone from the displayed list.
   - Phonebook Download

     Select to turn on or off the automatic download of a connected phone's phonebook.
   - Siri

     Select the button operation for Siri® Eyes Free function from "Short Press" and "Long Press". (See "Changing Siri® Eyes Free Settings (models without navigation system)" (P.4-81).)

     "Siri" is displayed only when a Siri® Eyes Free enabled iPhone® is connected to the vehicle.
   - Show Incoming Calls

     Select "Driver Only" to have the caller information displayed only in the vehicle information display. Select "Both" to have the information displayed in both the vehicle information display and the color display.
   - Text Message (if so equipped)

     Select to turn on or off the vehicle's text messaging feature.
   - New Text Sound (if so equipped)

     Select to adjust the volume of the sound that plays when a new text is received by a phone connected to the Bluetooth® Hands-Free Phone System. The setting all the way to the left indicates that the new text sound will be muted.
   - Show Incoming Text (if so equipped)

     Select "Driver Only" to have sender information displayed only in the vehicle information display. Select "Both" to have the information displayed in both the vehicle information display and the color display. Select "None" to have no display of sender information.
   - Edit Custom Messages (if so equipped)

     Select to set a custom message that will be available with the

standard options when sending a text message. To set a custom message, send a text message to your own phone number while the phone is connected to the system. Three custom messages can be set. Custom messages can only be set while the vehicle is stationary.

- Auto Reply (if so equipped)

  Select to turn on or off the Auto Reply function. When enabled, the vehicle will automatically send a predefined text message to the sender when a text message is received while driving.

- Auto Reply Message (if so equipped)

  Select to choose the message that is sent when the Auto Reply function is enabled. Choose from "I'm Driving" or one of the three custom messages stored in the system.

- Vehicle Signature On/Off (if so equipped)

  Select to choose whether or not the vehicle signature is added to outgoing text messages from the vehicle. This message cannot be changed or customized.

WARNING

- **Use a phone after stopping your vehicle in a safe location. If you have to use a phone while driving, exercise extreme caution at all times so full attention may be given to vehicle operation.**
- **If you are unable to devote full attention to vehicle operation while talking on the phone, pull off the road to a safe location and stop your vehicle.**

CAUTION

To avoid discharging the vehicle battery, use a phone after starting the engine.

Your vehicle is equipped with the Bluetooth® Hands-Free Phone System. If you have a compatible Bluetooth® enabled cellular phone, you can set up the wireless connection between your cellular phone and the in-vehicle phone module. With Bluetooth® wireless technology, you can make or receive a hands-free telephone call with your cellular phone in the vehicle.

Once your cellular phone is connected to the in-vehicle phone module, no other phone connecting procedure is required. Your phone is automatically connected with the in-vehicle phone module when the ignition switch is placed in the ON position with the connected cellular phone turned on and carried in the vehicle.

You can register up to five different Bluetooth® cellular phones to the in-vehicle phone module. However, you can talk on only one cellular phone at a time.

NISSAN Voice Recognition system supports the phone commands, so dialing a phone number using your voice is possible. For more details, see "NISSAN Voice Recognition system (models with navigation system)" (P.4-100).

Before using the Bluetooth® Hands-Free Phone System, refer to the following notes.

- Set up the wireless connection between a cellular phone and the in-vehicle phone module before using the Hands-Free Phone System.
- Some Bluetooth® enabled cellular phones may not be recognized by the in-vehicle phone module. Please visit www.nissanusa.com/bluetooth

or www.nissan.ca/bluetooth for a recommended phone list and connecting.

- You will not be able to use a hands-free phone under the following conditions:
  - Your vehicle is outside of the cellular service area.
  - Your vehicle is in an area where it is difficult to receive cellular signal; such as in a tunnel, in an underground parking garage, near a tall building or in a mountainous area.
  - Your cellular phone is locked to prevent it from being dialed.
- When the radio wave condition is not ideal or ambient sound is too loud, it may be difficult to hear the other person's voice during a call.
- Immediately after the ignition switch is placed in the ON position, it may be impossible to receive a call for a short period of time.
- Do not place the cellular phone in an area surrounded by metal or far away from the in-vehicle phone module to prevent tone quality degradation and wireless connection disruption.
- While a cellular phone is connected through the Bluetooth® wireless connection, the battery power of the cellular phone may discharge quicker than usual. The Bluetooth® Hands-Free Phone System cannot charge cellular phones.
- If the Bluetooth® Hands-Free Phone System seems to be malfunctioning, visit www.nissanusa.com/bluetooth or www.nissan.ca/bluetooth for troubleshooting help.
- Some cellular phones or other devices may cause interference or a buzzing noise to come from the audio system speakers. Storing the device in a different location may reduce or eliminate the noise.
- Refer to the cellular phone owner's manual regarding the telephone charges, cellular phone antenna and body, etc.
- The signal strength display on the monitor will not coincide with the signal strength display of some cellular phones.

REGULATORY INFORMATION

FCC Regulatory information

- CAUTION: To maintain compliance with FCC's RF exposure guidelines, use only the supplied antenna. Unauthorized antenna, modification, or attachments could damage the transmitter and may violate FCC regulations.
- Operation is subject to the following two conditions:
  1) This device may not cause interference and
  2) This device must accept any interference, including interference that may cause undesired operation of the device.

IC Regulatory information

- Operation is subject to the following two conditions: (1) this device may not cause interference, and (2) this device must accept any interference, including interference that may cause undesired operation of the device.
- This Class B digital apparatus meets all requirements of the Canadian Interference- Causing Equipment Regulations.

Bluetooth® is a trademark owned by Bluetooth SIG, Inc. and licensed to Robert Bosch GmbH.

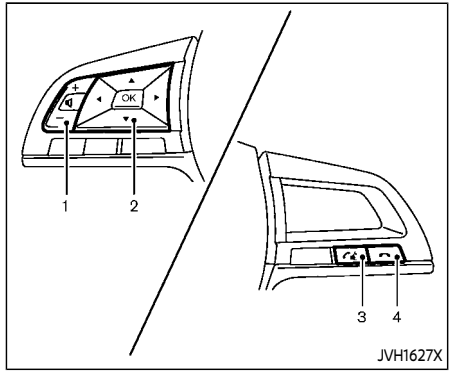

CONTROL BUTTONS AND MICROPHONE

Control buttons:

1. Volume control buttons
2. Menu control buttons/OK button

   While using the voice recognition system, push the ▼ / ▲ buttons to manually control the phone system.
3. button

   Push the button to initiate a voice recognition operation session or answer an incoming call.

INFO:

If "Siri" on the phone settings menu is set to "Short Press", pushing and holding the button initiates a voice recognition operation session for Hands-Free Phone operation. (See "Phone settings" (P.4-99).)

4. button

   Push the button to reject the call.

The button located on the control panel can also be used to operate the Bluetooth® Hands-Free Phone System.

Microphone:

Microphone is located near the map lights.

VOICE COMMAND

You can use voice commands to operate various Bluetooth® Hands-Free Phone System features using the NISSAN Voice Recognition system. For more details, see "NISSAN Voice Recognition system (models with navigation system)" (P.4-100).

Voice Prompt Interrupt

While using the Voice Recognition system, the system voice can be interrupted to allow the user to speak commands. While the system is speaking, push the button on the steering wheel. The system voice will stop and a tone will be heard.

After the tone, speak desired command (displayed on the touch screen).

One Shot Call

To use the system faster, you may speak the second level commands with the main menu command on the main menu. For example, push the button and after the tone say, “Call Redial”.

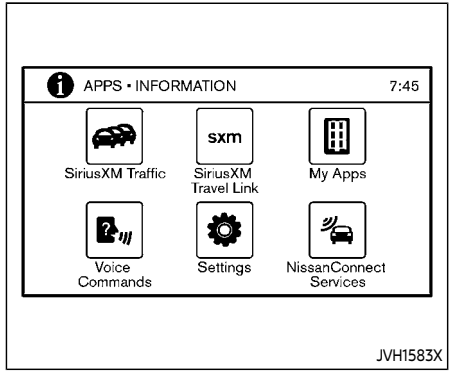

Example

CONNECTING PROCEDURE

NOTE:

The connecting procedure must be performed when the vehicle is stationary. If the vehicle starts moving during the procedure, the procedure will be cancelled.

1. Push the APPS·i button on the control panel.
2. Touch the “Settings” key.
3. Touch the “Phone & Bluetooth” key.
4. Touch the “Connect New Device” key.
5. Initiate the connecting process from the handset. The system will display the message. If the PIN is displayed on your Bluetooth® device, select “Yes” to complete the pairing process.

For more information, see the Bluetooth® device’s owner’s manual.

VEHICLE PHONEBOOK

To access the vehicle phonebook:

1. Push the button on the control panel.
2. Touch the “Phonebook” key.
3. Choose the desired entry from the displayed list.
4. The number of the entry will be displayed on the screen. Touch the number to initiate dialing.

NOTE:

To scroll quickly through the list, touch the “A-Z” key in the upper right corner of the screen. Turn the ENTER AUDIO/TUNE·SCROLL dial to choose a letter or number and then push the ENTER AUDIO/TUNE·SCROLL dial. The list will move to the first entry that begins with that number or letter.

MAKING A CALL

To make a call, follow the procedure below:

1. Push the button on the control panel. The "PHONE" screen will appear on the display.
2. Select one of the following options to make a call:

- "Phonebook": Select the name from an entry stored in the vehicle phonebook.
- "Call Lists": Select the name from the incoming, outgoing or missed.
- "Redial": Dial the last outgoing call from the vehicle.
- "": Input the phone number manually using a keypad displayed on the screen. For information on how to use the touch screen, see "How to use touch screen" (P.4-4).

RECEIVING A CALL

When a call is placed to the connected phone, the display will change to phone mode.

To accept the incoming call:

- Push the button on the steering wheel.
- Touch the call accept icon ( ) on the screen.

To reject the incoming call:

- Push the button on the steering wheel.
- Touch the phone end icon ( ) on the screen.

DURING A CALL

While a call is active, the following options are available on the screen:

- "Handset"

  Select this option to switch control of the phone call over to the handset.
- "Mute Mic."

  Select this option to mute the microphone. Select again to unmute the microphone.
- Phone end ( ) icon

  Select to end the phone call.

ENDING A CALL

To end a phone call, select the phone end ( ) icon on the screen or push the button on the steering wheel.

TEXT MESSAGING (if so equipped)

WARNING

- **Laws in some jurisdictions may restrict the use of some of the applications and features, such as social networking and texting.**
- **Laws in some jurisdictions may restrict the use of "Text-to-Speech". Check local regulations before using this feature.**
- **Use the text messaging feature after stopping your vehicle in a safe location. If you have to use the feature while driving, exercise extreme caution at all times so full attention may be given to vehicle operation.**
- **If you are unable to devote full attention to vehicle operation while using the text messaging feature, pull off the road to a safe location and stop your vehicle.**

NOTE:

Many phones may require special permission to enable text messaging. Check the phone's screen during Bluetooth® pairing. For some phones, you may need to enable "Notifications" in the phone's Bluetooth® menu for text messages to appear on the vehicle audio system. See the phone's owner's manual for details. Text message integration requires that the phone support MAP (Message Access Profile) for both receiving and sending text messages. Some phones may not support all text messaging features. Refer to www.nis-

sanusa.com/bluetooth or www.nissan.ca/bluetooth for compatibility information, as well as your device's owner's manual.

The system allows for the sending and receiving of text messages through the vehicle interface.

Sending a text message

1. Push the button on the steering wheel.
2. Say "Phone" after the tone.
3. Say "Send Text" after the tone.
4. The system will provide a list of available commands in order to determine the recipient of the text message. Choose from the following:
   - To (a name)
   - Enter Number
   - Missed Calls
   - Incoming Calls
   - Outgoing Calls

   For more information about these options, see "Phone voice commands" (P.4-103).
5. Once a recipient is chosen, the system prompts for which message to send. Several predefined and custom messages are available. To choose one of the predefined messages, speak one of the following after the tone:
   - "Driving, can't text"
   - "Call me"
   - "On my way"
   - "Running late"
   - "Okay"
   - "Yes"
   - "No"
   - "Where are you?"
   - "When?"
   - "Custom Messages"

   To send one of the custom messages, say "Custom Messages". If more than one custom message is stored, the system will prompt for the number of the desired custom message. For more information on setting and managing custom text messages, see "Phone settings" (P.4-99).

NOTE:

iPhone® can only send text messages via Siri® Eyes Free. (See "Siri® Eyes Free" (P.4-79).)

Reading a received text message

1. Push the button on the steering wheel.
2. Say "Phone" after the tone.
3. Say "Read Text" after the tone.

The text message, sender and delivery time are shown on the screen. Use the menu control buttons to scroll through all text messages if more than one are available. Push the button to exit the text message screen. Push the button to access the following options for replying to the text message:

- Call Back

  Speak this command to call the sender of the text message using the Bluetooth® Hands-Free Phone System.
- Send Text

  Speak this command to send a text message response to the sender of the text message.
- Read Text

  Speak this command to read the text message again.
- Previous Text

  Speak this command to move to the previous text message (if available).
- Next Text

  Speak this command to move to the next text message (if available).

NOTE:

Text messages are only displayed if the vehicle speed is less than 5 MPH (8 km/h).

Making custom messages with Siri® Eyes Free

If a connected iPhone® is equipped with Siri®, it can also be used to create custom messages. (See "Siri® Eyes Free" (P.4-79).)

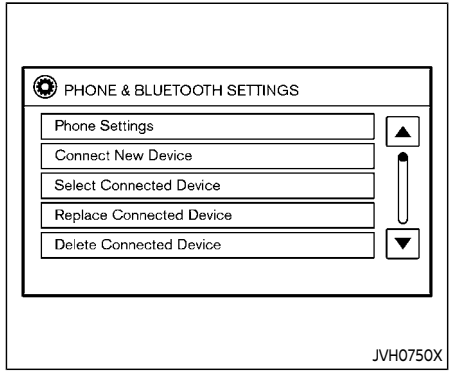

PHONE AND Bluetooth® SETTINGS

To access the phone and Bluetooth® settings:

1. Push the APPS·i button.
2. Touch the "Settings" key.
3. Touch the "Phone & Bluetooth" key.

Menu Item	Result
Phone Settings	For detailed information, see "Phone settings" (P.4-99).
Connect New Device	Touch to connect a new Bluetooth® device to the Bluetooth® Hands-Free Phone System. (See "Connecting procedure" (P.4-96).)
Select Connected Device	Touch to choose a Bluetooth® device from a list of those devices connected to the Bluetooth® Hands-Free Phone System.
Replace Connected Device	Touch to replace a Bluetooth® device from a list of those devices connected to the Bluetooth® Hands-Free Phone System.
Delete Connected Device	Touch to delete a Bluetooth® device from a list of those devices connected to the Bluetooth® Hands-Free Phone System.
Bluetooth	Touch to toggle Bluetooth® on and off.

Phone settings

To access the phone settings:

1. Push the APPS·i button.
2. Touch the "Settings" key.
3. Touch the "Phone & Bluetooth" key.
4. Touch the "Phone Settings" key and adjust the following settings as desired:

- Start Siri by:
  Touch “Short Press” or “Long Press” to set how Siri® is operated on the steering wheel.
- Sort Phonebook By:
  Touch “First Name” or “Last Name” to choose how phonebook entries are alphabetically displayed on the screen.
- Use Phonebook From:
  Touch “Handset” to use the phone’s phonebook. Select “SIM” to use the phonebook on the SIM card. Touch “Both” to use both sources.
- Download Phonebook Now:
  Touch to download the phonebook to the vehicle from the chosen source.
- Record Name for Phonebook Entry:
  Touch to record a name for a phonebook entry for use with the NISSAN Voice Recognition System.
- Phone Notifications for:
  Touch “Driver” to have phone notifications shown in the vehicle information display. Touch “Both” to have phone notifications shown in both the vehicle information display and the touch screen.
- Text Messaging (if so equipped):
  Touch to toggle the text message functionality on or off.
- Show Incoming Text for (if so equipped):
  Touch “Driver” to have incoming text notifications shown in the vehicle information display. Touch “Both” to have text notifications shown in both the vehicle information display and the touch screen. Touch “OFF” to turn off all text notifications.
- Auto Reply (if so equipped):
  Touch to toggle the auto reply functionality on or off.
- Auto Reply Message (if so equipped):
  Touch to indicate preferred message to be sent when “Auto Reply” function is activated.
- Use Vehicle’s Signature (if so equipped):
  Touch to toggle on or off the addition of the vehicle signature to outgoing messages
- Custom Text Messages (if so equipped):
  Touch this option to select a custom message to edit. There are several custom message slots available.

NISSAN VOICE RECOGNITION SYSTEM (models with navigation system)

The NISSAN Voice Recognition system allows hands-free operation of the systems equipped on this vehicle, such as the phone and navigation systems.

To operate NISSAN Voice Recognition, push the button located on the steering wheel. When prompted, speak the command for the system you wish to activate. The command given is picked up by the microphone and performed when it is properly recognized. NISSAN Voice Recognition will provide a voice response as well as a message in the touch screen to inform you of the command results.

USING THE SYSTEM

Initialization

When the ignition switch is placed in the ACC or ON position, NISSAN Voice Recognition is initialized, which takes a few seconds. When completed, the system is ready to accept voice commands. If the button is pushed before the initialization completes, the system will announce: "Voice Recognition System not ready. Please wait."

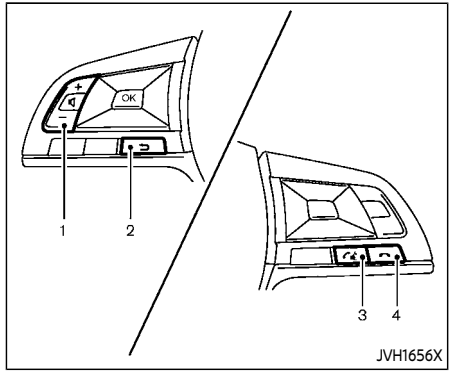

1. Volume control buttons
2. Back button
3. button
4. button

Giving voice commands

Follow the procedure below to conduct a voice recognition operation:

1. Push the button.
2. The system announces: "Please say a category like phone or a command like points of interest followed by a brand name". A list of available commands is then spoken by the system.
3. After the tone sounds and the face icon on the display changes, speak a command. Available commands are discussed in this section.
4. Voice and display feedback are provided when the command is accepted.

- If you want to go back to the previous menu of commands, push the button on the steering wheel, back button on the steering wheel or BACK button on the control panel. The system will announce: "Go Back" depending on the current menu level.
- If you want to adjust the volume of the voice feedback, use the volume control buttons on the steering wheel or the POWER/VOLUME dial on the control panel.
- The voice command screen can also be accessed using the touch screen:
  1) Push the APPS·i button.
  2) Touch the "Voice Commands" key.

Operating tips

To get the best performance out of NISSAN Voice Recognition, observe the following:

- Keep the interior of the vehicle as quiet as possible. Close the windows to eliminate the surrounding noises (traffic noises, vibration sounds, etc.), which may prevent the system from recognizing the voice commands cor-

rectly.

- Wait until a tone sounds before speaking a command. Otherwise, the command will not be received properly.
- Start speaking a command within 3.5 seconds after the tone sounds.
- Speak in a natural voice without pausing between words.

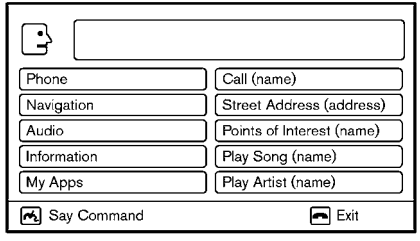

JVH1687X

SYSTEM FEATURES

NISSAN Voice Recognition can activate the following systems:

- Phone
- Navigation
- Audio
- Information
- My Apps
- Help

For additional information on the navigation system, see the separate Navigation System Owner's Manual.

How to say numbers

NISSAN Voice Recognition requires a certain way to speak numbers in voice commands. Refer to the following examples.

General rule: Either "zero" or "oh" can be used for "0".

Phone numbers:

Speak phone numbers according to the following example. For 1-800-662-6200, say dial number and then speak the phone number in any of the following formats:

- "one eight oh oh six six two six two oh oh"
- "one eight hundred six six two six two oh oh"
- "one eight zero zero six six two six two oh oh"

For the best voice recognition phone dialing results, say phone numbers as single digits. Also, full numbers can only be spoken for "800". For example, you cannot say 555-6000 as "five five five six thousand".

PHONE VOICE COMMANDS

To access the phone voice commands:

1. Push the button.
2. Say "Call" and then a name in the phonebook to call that entry. Otherwise, say "Phone" to access various phone commands.

If the Bluetooth® has been set to "OFF", the system announces: "Bluetooth® is off. Would you like to turn Bluetooth® on?"

If no phone is connected to the system and the vehicle is stationary, the system announces: "There is no phone connected. Would you like to connect a phone now?" Say "Yes" to connect a phone. All further phone voice commands are only available if a phone is connected.

If a phone is connected and Bluetooth® is set to "ON", the following voice commands are available:

- Call (a name)

  Speak the name of the contact in which you are trying to call. System will confirm correct contact. Say "Dial" to initiate dialing.
- Dial Number

  Allows for up to 24 digits to be dialed. After the number is entered, say "Dial" to initiate dialing. Say "Correction" to correct the number entered. Say "Go Back" to return to the main menu.
- List Phonebook

  Starting with the first alphabetical entry in the vehicle phonebook, the system prompts for an additional command. Say "Dial" to call the number of the phonebook entry. Say "Send Text" to send a text message to the number of the phonebook entry. Say "Next Entry" to skip to the next alphabetical entry in the vehicle phonebook, where the same options will then be available.
- Recent Calls

  The system prompts for an additional command. Say "Missed Calls", "Incoming Calls" or "Outgoing Calls" to display a list of such calls on the screen.

  Speak the number of the entry displayed on the screen to dial that number or say "Next Page" to view entries on the next page (if available).
- Redial

  Redials the last called number.
- Read Text (if so equipped)

  Reads an incoming text message. For more information about text messaging with the Bluetooth® Hands-Free Phone System, see "Text messaging" (P.4-97).
- Send Text (if so equipped)

  Sends a text message. For more information about text messaging with the Bluetooth® Hands-Free Phone System, see "Text messaging" (P.4-97).
- Select Phone

  The system replies "Please use manual controls to continue". Use manual controls to change the active phone from among the listed phones connected to the vehicle.
- Siri (if so equipped)

  Siri® Eyes Free function can be activated. See "Siri® Eyes Free" (P.4-79) for details.

For more information about the Bluetooth® Hands-Free Phone System, see "Bluetooth® Hands-Free Phone System (models with navigation system)" (P.4-93).

NAVIGATION SYSTEM VOICE COMMANDS

The following voice commands are available for the Navigation System:

- Street Address (address)
- Points of Interest (name)
- POI by Category
- Home
- Address Book

- Previous Destinations
- Enter Address in Steps
- Cancel Route

For more information about these commands, see the separate Navigation System Owner's Manual.

AUDIO SYSTEM VOICE COMMANDS

To access the audio system voice commands:

1. Push the button.
2. Say "Audio".
3. Speak a command from the following available commands:

- Play (AM, FM, etc.)
  Allows user to select radio band
- Tune AM (number)
  Allows user to tune directly to a desired AM frequency
- Tune FM (number)
  Allows user to tune directly to a desired FM frequency
- SXM Channel (number)
  Allows user to tune directly to a desired SXM channel (if so equipped)
- CD Track (number)
  Allows user to select track to be played
- Play Song (name)
  Allows user to select song name to be played
- Play Artist (name)
  Allows user to select artist to be played
- Play Album (name)
  Allows user to select album name to be played

For more information about the audio system, see "FM-AM-SAT radio with Compact Disc (CD) player (Type B)" (P.4-63).

INFORMATION VOICE COMMANDS

The following voice commands are available for the information functions of the Navigation System:

- Traffic
- Fuel Prices
- Sports
- Stocks
- Movie Listings
- Current Weather
- Weather Map
- 5-day Forecast
- 6-hour Forecast
- Connect To Voice Menu (if so equipped)

For more information about these commands, see the separate Navigation System Owner's Manual.

MY APPS VOICE COMMANDS

Many Apps can be accessed using this voice command. For information about smartphone integration, "NissanConnect℠ Mobile Apps smartphone integration" (P.4-78).

HELP VOICE COMMANDS

The following voice commands can be spoken to have the system provide instructions and tips for using the NISSAN Voice Recognition system.

- List Commands
- What Can I Say?
- General Help
- Quit
- Exit
- Help

TROUBLESHOOTING GUIDE

The system should respond correctly to all voice commands without difficulty. If problems are encountered, follow the solutions given in this guide for the appropriate error. Where the solutions are listed by number, try each solution in turn, starting with number one, until the problem is resolved.

Symptom/error message	Solution
The system responds “Command Not Recognized” or the system fails to recognize the command correctly.	1. Ensure that the command format is valid. Use the “List Commands” or “What Can I Say?” command under the “Help” menu.
	2. Speak clearly without pausing between words and at a level appropriate to the ambient noise level.
	3. Ensure that the ambient noise level is not excessive (for example, with the windows open or the defroster on). **NOTE:** **If it is too noisy to use the phone, it is likely that voice commands will not be recognized.**
	4. If optional words of the command have been omitted, then the command should be tried with these in place.

MEMO

5 Starting and driving

Precautions when starting and driving 5-4
Exhaust gas (carbon monoxide) 5-4
Three-way catalyst 5-4
Tire Pressure Monitoring System (TPMS) 5-5
Avoiding collision and rollover 5-8
On-pavement and off-road driving precautions 5-8
Off-road recovery 5-9
Rapid air pressure loss 5-9
Drinking alcohol/drugs and driving 5-10
Driving safety precautions 5-10
Ignition switch (models without Intelligent Key system) 5-12
Continuously Variable Transmission (CVT) 5-13
Manual Transmission (MT) 5-13
Key positions 5-14
Push-button ignition switch (model with Intelligent Key system) 5-14
Operating range for engine start function 5-14
Push-button ignition switch operation 5-15
Push-button ignition switch positions 5-16
Emergency engine shut off 5-16
Intelligent Key battery discharge 5-17
Before starting the engine 5-17
Starting the engine (model without Intelligent Key system) 5-18
Starting the engine (model with Intelligent Key system) 5-19
Remote engine start (if so equipped) 5-20
Driving the vehicle 5-20
Continuously Variable Transmission (CVT) 5-20
Manual Transmission (MT) 5-25
Parking brake 5-27
Pedal type 5-27
Switch type (models with electronic parking brake system) 5-27
ECO mode system 5-29
ECO Pedal Guide function 5-30
Ambient ECO 5-30
ECO Drive Report 5-31
Lane Departure Warning (LDW) (if so equipped) 5-32
LDW system operation 5-33
How to enable/disable the LDW system 5-34
LDW system limitations 5-35
System temporarily unavailable 5-36
System malfunction 5-36
System maintenance 5-36

Intelligent Lane Intervention (I-LI) (if so equipped) 5-37
I-LI system operation 5-38
How to enable/disable the I-LI system 5-39
I-LI system limitations 5-39
System temporarily unavailable 5-41
System malfunction 5-41
System maintenance 5-42
Blind Spot Warning (BSW) (if so equipped) 5-42
BSW system operation 5-44
How to enable/disable the BSW system 5-45
BSW system limitations 5-46
BSW driving situations 5-47
System temporarily unavailable 5-50
System malfunction 5-51
System maintenance 5-51
Rear Cross Traffic Alert (RCTA) (if so equipped) 5-52
RCTA system operation 5-53
How to enable/disable the RCTA system 5-55
RCTA system limitations 5-56
System temporarily unavailable 5-58
System malfunction 5-59
System maintenance 5-59
Cruise control (if so equipped) 5-60
Precautions on cruise control 5-61
Cruise control operations 5-61
Intelligent Cruise Control (ICC) (if so equipped) 5-62
How to select the cruise control mode 5-64
Vehicle-to-vehicle distance control mode 5-64
Conventional (fixed speed) cruise control mode 5-78
Automatic Emergency Braking (AEB) (if so equipped) 5-82
AEB system operation 5-83
Turning the AEB system ON/OFF 5-85
AEB system limitations 5-86
System temporarily unavailable 5-87
System malfunction 5-88
System maintenance 5-88
Automatic Emergency Braking (AEB) with pedestrian detection system 5-89
AEB with pedestrian detection system operation 5-91
Turning the AEB with pedestrian detection system ON/OFF 5-93
AEB with pedestrian detection system limitations 5-94
System temporarily unavailable 5-96
System malfunction 5-97
System maintenance 5-98
Break-in schedule 5-99
Fuel Efficient Driving Tips 5-99

Increasing fuel economy 5-100
Intelligent 4x4 (if so equipped) 5-100
Intelligent 4x4 LOCK switch operations 5-102
Parking/parking on hills 5-104
Electric power steering 5-105
Brake system 5-106
Braking precautions 5-106
Brake assist 5-107
Brake assist 5-107
Anti-lock Braking System (ABS) 5-107
Vehicle Dynamic Control (VDC) system 5-108
Chassis control 5-110
Intelligent Trace Control 5-110
Intelligent Engine Brake (Continuously Variable Transmission (CVT) models) 5-111
Active Ride Control 5-112
Hill Start Assist system 5-113
Cold weather driving 5-113
Freeing a frozen door lock 5-113
Anti-freeze 5-113
Battery 5-113
Draining of coolant water 5-113
Tire equipment 5-114
Special winter equipment 5-114
Driving on snow or ice 5-114

WARNING

- **Do not leave children or adults who would normally require the support of others alone in your vehicle. Pets should not be left alone either. They could accidentally injure themselves or others through inadvertent operation of the vehicle. Also, on hot, sunny days, temperatures in a closed vehicle could quickly become high enough to cause severe or possibly fatal injuries to people or animals.**
- **Properly secure all cargo with ropes or straps to help prevent it from sliding or shifting. Do not place cargo higher than the seatbacks. In a sudden stop or collision, unsecured cargo could cause personal injury.**

EXHAUST GAS (carbon monoxide)

WARNING

- **Do not breathe exhaust gas; it contains colorless and odorless carbon monoxide. Carbon monoxide is dangerous. It can cause unconsciousness or death.**
- **If you suspect that exhaust fumes are entering the vehicle, drive with all windows fully open, and have the vehicle inspected immediately.**
- **Do not run the engine in closed spaces such as a garage.**
- **Do not park the vehicle with the engine running for an extended period of time.**
- **Keep the liftgate closed while driving, otherwise exhaust gas could be drawn into the passenger compartment. If you must drive with the liftgate open, follow these precautions:**
  - **Open all the windows.**
  - **Turn the air recirculation mode off and set the fan speed control to the highest level to circulate the air.**
- **If a special body or other equipment is added for recreational or other usage, follow the manufacturer's recommendation to prevent carbon monoxide entry into the vehicle. (Some recreational vehicle appliances such as stoves, refrigerators, heaters, etc. may also generate carbon monoxide.)**
- **The exhaust system and body should be inspected by a qualified mechanic whenever:**
  - **Your vehicle is raised while being serviced.**
  - **You suspect that exhaust fumes are entering into the passenger compartment.**
  - **You notice a change in the sound of the exhaust system.**
  - **You have had an accident involving damage to the exhaust system, underbody, or rear of the vehicle.**

THREE-WAY CATALYST

The three-way catalyst is an emission control device installed in the exhaust system. Exhaust gases in the three-way catalyst are burned at high temperatures to help reduce pollutants.

WARNING

- **The exhaust gas and the exhaust system are very hot. Keep people, animals and flammable materials**

away from the exhaust system components.

- **Do not stop or park the vehicle over flammable materials such as dry grass, wastepaper or rags. They may ignite and cause a fire.**

CAUTION

- **Do not use leaded gasoline. Deposits from leaded gasoline will seriously reduce the three-way catalyst's ability to help reduce exhaust pollutants.**
- **Keep your engine tuned up. Malfunctions in the ignition, fuel injection, or electrical systems can cause overrich fuel flow into the three-way catalyst, causing it to overheat. Do not keep driving if the engine misfires, or if noticeable loss of performance or other unusual operating conditions are detected. Have the vehicle inspected. It is recommended you visit a NISSAN dealer for this service.**
- **Avoid driving with an extremely low fuel level. Running out of fuel could cause the engine to misfire, damaging the three-way catalyst.**
- **Do not race the engine while warming it up.**
- **Do not push or tow your vehicle to start the engine.**

TIRE PRESSURE MONITORING SYSTEM (TPMS)

Each tire, including the spare (if provided), should be checked monthly when cold and inflated to the inflation pressure recommended by the vehicle manufacturer on the vehicle placard or tire inflation pressure label. (If your vehicle has tires of a different size than the size indicated on the vehicle placard or tire inflation pressure label, you should determine the proper tire inflation pressure for those tires.)

As an added safety feature, your vehicle has been equipped with a Tire Pressure Monitoring System (TPMS) that illuminates a low tire pressure telltale when one or more of your tires is significantly under-inflated. Accordingly, when the low tire pressure telltale illuminates, you should stop and check your tires as soon as possible, and inflate them to the proper pressure. Driving on a significantly under-inflated tire causes the tire to overheat and can lead to tire failure. Under-inflation also reduces fuel efficiency and tire tread life, and may affect the vehicle's handling and stopping ability.

Please note that the TPMS is not a substitute for proper tire maintenance, and it is the driver's responsibility to maintain correct tire pressure, even if under-inflation has not reached the level to trigger illumination of the TPMS low tire pressure telltale.

Your vehicle has also been equipped with a TPMS malfunction indicator to indicate when the system is not operating properly. The TPMS malfunction indicator is combined with the low tire pressure telltale. When the system detects a malfunction, the telltale will flash for approximately one minute and then remain continuously illuminated. This sequence will continue upon subsequent vehicle start-ups as long as the malfunction exists. When the malfunction indicator is illuminated, the system may not be able to detect or signal low tire pressure as intended. TPMS malfunctions may occur for a variety of reasons, including the installation of replacement or alternate tires or wheels on the vehicle that prevent the TPMS from functioning properly. Always check the TPMS malfunction telltale after replacing one or more tires

or wheels on your vehicle to ensure that the replacement or alternate tires and wheels allow the TPMS to continue to function properly.

Additional information

- Since the spare tire is not equipped with the TPMS, the TPMS does not monitor the tire pressure of the spare tire.
- The TPMS will activate only when the vehicle is driven at speeds above 16 MPH (25 km/h). Also, this system may not detect a sudden drop in tire pressure (for example a flat tire while driving).
- The low tire pressure warning light does not automatically turn off when the tire pressure is adjusted. After the tire is inflated to the recommended pressure, the vehicle must be driven at speeds above 16 MPH (25 km/h) to activate the TPMS and turn off the low tire pressure warning light. Use a tire pressure gauge to check the tire pressure.
- The "Tire Pressure Low - Add Air" warning appears in the vehicle information display when the low tire pressure warning light is illuminated and low tire pressure is detected. The "Tire Pressure Low - Add Air" warning turns off when the low tire pressure warning light turns off.

  The "Tire Pressure Low - Add Air" warning does not appear if the low tire pressure warning light illuminates to indicate a TPMS malfunction.
- Tire pressure rises and falls depending on the heat caused by the vehicle's operation and the outside temperature. Do not reduce the tire pressure after driving because the tire pressure rises after driving. Low outside temperature can lower the temperature of the air inside the tire which can cause a lower tire inflation pressure. This may cause the low tire pressure warning light to illuminate. If the warning light illuminates in low ambient temperature, check the tire pressure for all four tires.

For additional information, see "Low tire pressure warning light" (P.2-13) and "Tire Pressure Monitoring System (TPMS)" (P.6-3).

WARNING

- **If the low tire pressure warning light illuminates while driving, avoid sudden steering maneuvers or abrupt braking, reduce vehicle speed, pull off the road to a safe location and stop the vehicle as soon as possible. Driving with under-inflated tires may permanently damage the tires and increase the likelihood of tire failure. Serious vehicle damage could occur and may lead to an accident and could result in serious personal injury. Check the tire pressure for all four tires. Adjust the tire pressure to the recommended COLD tire pressure shown on the Tire and Loading Information label to turn the low tire pressure warning light OFF. If you have a flat tire, replace it with a spare tire as soon as possible. (See "Flat tire" (P.6-3) for changing a flat tire.)**
- **Since the spare tire is not equipped with the TPMS, when a spare tire is mounted or a wheel is replaced, the TPMS will not function and the low tire pressure warning light will flash for approximately 1 minute. The light will remain on after 1 minute. Have your tires replaced and/or TPMS system reset as soon as possible. It is recommended you visit a NISSAN dealer for these services.**

- **Replacing tires with those not originally specified by NISSAN could affect the proper operation of the TPMS.**
- **Do not inject any tire liquid or aerosol tire sealant into the tires, as this may cause a malfunction of the tire pressure sensors.**

CAUTION

- **The TPMS may not function properly when the wheels are equipped with tire chains or the wheels are buried in snow.**
- **Do not place metalized film or any metal parts (antenna, etc.) on the windows. This may cause poor reception of the signals from the tire pressure sensors, and the TPMS will not function properly.**

Some devices and transmitters may temporarily interfere with the operation of the TPMS and cause the low tire pressure warning light to illuminate. Some examples are:

- Facilities or electric devices using similar radio frequencies are near the vehicle.
- If a transmitter set to similar frequencies is being used in or near the vehicle.
- If a computer (or similar equipment) or a DC/AC converter is being used in or near the vehicle.

Low tire pressure warning light may illuminate in the following cases.

- If the vehicle is equipped with a wheel and tire without TPMS.
- If the TPMS has been replaced and the ID has not been registered.
- If the wheel is not originally specified by NISSAN.

FCC Notice:

For USA:

This device complies with Part 15 of the FCC Rules. Operation is subject to the following two conditions: (1) This device may not cause harmful interference, and (2) this device must accept any interference received, including interference that may cause undesired operation.

Note: Changes or modifications not expressly approved by the party responsible for compliance could void the user's authority to operate the equipment.

For Canada:

This device complies with Industry Canada licence-exempt RSS standard(s). Operation is subject to the following two conditions: (1) this device may not cause interference, and (2) this device must accept any interference, including interference that may cause undesired operation of the device.

TPMS with Easy Fill Tire Alert

When adding air to an under-inflated tire, the TPMS with Easy Fill Tire Alert provides visual and audible signals outside the vehicle to help you inflate the tires to the recommended COLD tire pressure.

Vehicle set-up:

1. Park the vehicle in a safe and level place.
2. Apply the parking brake and place the shift lever in the P (Park) position (CVT model) or N (Neutral) position (MT model).
3. Place the ignition switch in the ON position. Do not start the engine.

Operation:

1. Add air to the tire.
2. After a few seconds, the hazard indicators will start flashing.

3. When the designated pressure is reached, the horn beeps once and the hazard indicators stop flashing.
4. Perform the above steps for each tire.

- If the tire is over-inflated more than approximately 4 psi (30 kPa), the horn beeps and the hazard indicators flash 3 times. To correct the pressure, push the core of the valve stem on the tire briefly to release pressure. When the pressure reaches the designated pressure, the horn beeps once.
- If the hazard indicator does not flash within approximately 15 seconds after starting to inflate the tire, it indicates that the TPMS with Easy Fill Tire Alert is not operating.
- The TPMS will not activate the Easy Fill Tire Alert under the following conditions:
  - If there is interference from an external device or transmitter
  - The air pressure from the inflation device such as those using a power socket is not sufficient to inflate the tire
  - If an electrical equipment is being used in or near the vehicle
  - There is a malfunction in the TPMS system
- If the TPMS with Easy Fill Tire Alert does not operate due to TPMS interference, move the vehicle about 3 ft (1m) backward or forward and try again.

If the TPMS with Easy Fill Tire Alert is not working, use a tire pressure gauge.

AVOIDING COLLISION AND ROLLOVER

WARNING

Failure to operate this vehicle in a safe and prudent manner may result in loss of control or an accident.

Be alert and drive defensively at all times. Obey all traffic regulations. Avoid excessive speed, high speed cornering, or sudden steering maneuvers, because these driving practices could cause you to lose control of your vehicle. **As with any vehicle, a loss of control could result in a collision with other vehicles or objects, or cause the vehicle to rollover, particularly if the loss of control causes the vehicle to slide sideways.** Be attentive at all times, and avoid driving when tired. Never drive when under the influence of alcohol or drugs (including prescription or over-the-counter drugs which may cause drowsiness). Always wear your seat belt as outlined in "Seat belts" (P.1-10) of this manual, and also instruct your passengers to do so.

Seat belts help reduce the risk of injury in collisions and rollovers. **In a rollover crash, an unbelted or improperly belted person is significantly more likely to be injured or killed than a person properly wearing a seat belt.**

ON-PAVEMENT AND OFF-ROAD DRIVING PRECAUTIONS

Utility vehicles have a significantly higher rollover rate than other types of vehicles.

They have higher ground clearance than passenger cars to make them capable of performing in a variety of on-pavement and off-road applications. This gives them a higher center of gravity than ordinary cars. An advantage of higher ground clearance is a better view of the road, allowing you to anticipate problems. However, they are not designed for cornering at the same speeds as conventional passenger cars any more than low-slung sports cars are designed to perform satisfactorily under off-road conditions. If at all possible, avoid sharp turns or abrupt

maneuvers, particularly at high speeds. As with other vehicles of this type, failure to operate this vehicle correctly may result in loss of control or vehicle rollover. Seat belts help reduce the risk of injury in collisions and rollovers. In a rollover crash, an unbelted or improperly belted person is significantly more likely to be injured or killed than a person properly wearing a seat belt.

Be sure to read "Driving safety precautions" (P.5-10).

OFF-ROAD RECOVERY

If the right side or left side wheels leave the road surface, maintain control of the vehicle by following the procedure below. Please note that this procedure is only a general guide. The vehicle must be driven as appropriate based on the conditions of the vehicle, road and traffic.

1. Remain calm and do not overreact.
2. Do not apply the brakes.
3. Maintain a firm grip on the steering wheel with both hands and try to hold a straight course.
4. When appropriate, slowly release the accelerator pedal to gradually slow the vehicle.
5. If there is nothing in the way, steer the vehicle to follow the road while the vehicle speed is reduced. Do not attempt to drive the vehicle back onto the road surface until vehicle speed is reduced.
6. When it is safe to do so, gradually turn the steering wheel until both tires return to the road surface. When all tires are on the road surface, steer the vehicle to stay in the appropriate driving lane.
   - If you decide that it is not safe to return the vehicle to the road surface based on vehicle, road or traffic conditions, gradually slow the vehicle to a stop in a safe place off the road.

RAPID AIR PRESSURE LOSS

Rapid air pressure loss or a "blow-out" can occur if the tire is punctured or is damaged due to hitting a curb or pothole. Rapid air pressure loss can also be caused by driving on under-inflated tires.

Rapid air pressure loss can affect the handling and stability of the vehicle, especially at highway speeds.

Help prevent rapid air pressure loss by maintaining the correct air pressure and visually inspect the tires for wear and damage. See "Wheels and tires" (P.8-29) of this manual.

If a tire rapidly loses air pressure or "blows-out" while driving, maintain control of the vehicle by following the procedure below. Please note that this procedure is only a general guide. The vehicle must be driven as appropriate based on the conditions of the vehicle, road and traffic.

WARNING

The following actions can increase the chance of losing control of the vehicle if there is a sudden loss of tire air pressure. Losing control of the vehicle may cause a collision and result in personal injury.

- **The vehicle generally moves or pulls in the direction of the flat tire.**
- **Do not rapidly apply the brakes.**
- **Do not rapidly release the accelerator pedal.**
- **Do not rapidly turn the steering wheel.**

1. Remain calm and do not overreact.
2. Maintain a firm grip on the steering wheel with both hands and try to hold a straight course.

3. When appropriate, slowly release the accelerator pedal to gradually slow the vehicle.
4. Gradually steer the vehicle to a safe location off the road and away from traffic if possible.
5. Lightly apply the brake pedal to gradually stop the vehicle.
6. Turn on the hazard warning flashers and either contact a roadside emergency service to change the tire or see "Changing a flat tire" (P.6-4) of this Owner's Manual.

DRINKING ALCOHOL/DRUGS AND DRIVING

WARNING

Never drive under the influence of alcohol or drugs. Alcohol in the bloodstream reduces coordination, delays reaction time and impairs judgement. Driving after drinking alcohol increases the likelihood of being involved in an accident injuring yourself and others. Additionally, if you are injured in an accident, alcohol can increase the severity of the injury.

NISSAN is committed to safe driving. However, you must choose not to drive under the influence of alcohol. Every year thousands of people are injured or killed in alcohol-related accidents. Although the local laws vary on what is considered to be legally intoxicated, the fact is that alcohol affects all people differently and most people underestimate the effects of alcohol.

Remember, drinking and driving don't mix! And that is true for drugs, too (over-the-counter, prescription, and illegal drugs). Don't drive if your ability to operate your vehicle is impaired by alcohol, drugs, or some other physical condition.

DRIVING SAFETY PRECAUTIONS

Your vehicle is designed for both normal and off-road use. However, avoid driving in deep water or mud as your vehicle is mainly designed for leisure use, unlike a conventional off-road vehicle.

Remember that Two-Wheel Drive (2WD) models are less capable than All-Wheel Drive (AWD) models for rough road driving and extrication when stuck in deep snow, mud, or the like.

Please observe the following precautions:

WARNING

- **Drive carefully when off the road and avoid dangerous areas. Every person who drives or rides in this vehicle should be seated with their seat belt fastened. This will keep you and your passengers in position when driving over rough terrain.**
- **Do not drive across steep slopes. Instead drive either straight up or straight down the slopes. Off-road vehicles can tip over sideways much more easily than they can forward or backward.**
- **Many hills are too steep for any vehicle. If you drive up them, you may stall. If you drive down them, you may not be able to control your speed. If you drive across them, you may roll over.**
- **Do not shift ranges while driving on downhill grades as this could cause loss of control of the vehicle.**
- **Stay alert when driving to the top of a hill. At the top there could be a drop-off or other hazard that could cause an accident.**

- If your engine stalls or you cannot make it to the top of a steep hill, never attempt to turn around. Your vehicle could tip or roll over. Always back straight down in R (Reverse) range. Never back down in N (Neutral), using only the brake, as this could cause loss of control.
- Heavy braking going down a hill could cause your brakes to overheat and fade, resulting in loss of control and an accident. Apply brakes lightly and use a low range to control your speed.
- Unsecured cargo can be thrown around when driving over rough terrain. Properly secure all cargo so it will not be thrown forward and cause injury to you or your passengers.
- To avoid raising the center of gravity excessively, do not exceed the rated capacity of the roof rack (if so equipped) and evenly distribute the load. Secure heavy loads in the cargo area as far forward and as low as possible. Do not equip the vehicle with tires larger than specified in this manual. This could cause your vehicle to roll over.
- Do not grip the inside or spokes of the steering wheel when driving off-road. The steering wheel could move suddenly and injure your hands. Instead drive with your fingers and thumbs on the outside of the rim.
- Before operating the vehicle, ensure that the driver and all passengers have their seat belts fastened.
- Always drive with the floor mats in place as the floor may became hot.
- Lower your speed when encountering strong crosswinds. With a higher center of gravity, your vehicle is more affected by strong side winds. Slower speeds ensure better vehicle control.
- Do not drive beyond the performance capability of the tires, even with AWD engaged.
- For AWD equipped vehicles, do not attempt to raise two wheels off the ground and shift the transmission to any drive or reverse position with the engine running. Doing so may result in drivetrain damage or unexpected vehicle movement which could result in serious vehicle damage or personal injury.
- Do not attempt to test an AWD equipped vehicle on a 2-wheel dynamometer (such as the dynamometers used by some states for emissions testing), or similar equipment even if the other two wheels are raised off the ground. Make sure you inform test facility personnel that your vehicle is equipped with AWD before it is placed on a dynamometer. Using the wrong test equipment may result in drivetrain damage or unexpected vehicle movement which could result in serious vehicle damage or personal injury.
- When a wheel is off the ground due to an unlevel surface, do not spin the wheel excessively (AWD model).
- Accelerating quickly, sharp steering maneuvers or sudden braking may cause loss of control.
- If at all possible, avoid sharp turning maneuvers, particularly at high speeds. Your vehicle has a higher center of gravity than a conventional passenger car. The

vehicle is not designed for cornering at the same speeds as conventional passenger cars. Failure to operate this vehicle correctly could result in loss of control and/or a rollover accident.

- Always use tires of the same type, size, brand, construction (bias, bias-belted or radial), and tread pattern on all four wheels. Install traction devices on the front wheels when driving on slippery roads and drive carefully.
- Be sure to check the brakes immediately after driving in mud or water. See "Brake system" (P.5-106) for wet brakes.
- Avoid parking your vehicle on steep hills. If you get out of the vehicle and it rolls forward, backward or sideways, you could be injured.
- Whenever you drive off-road through sand, mud or water as deep as the wheel hub, more frequent maintenance may be required. See the maintenance schedule shown in the "9. Maintenance and schedules" section.
- Spinning the front wheels on slippery surfaces may cause the AWD warning message to display and the AWD system to automatically switch from the AWD mode to the 2WD mode. This could reduce traction. (AWD models)

IGNITION SWITCH (models without Intelligent Key system)

WARNING

Never remove the key or place the ignition switch in the LOCK position while driving. The steering wheel will lock and could cause the driver to lose control of the vehicle. This could result in serious vehicle damage or personal injury.

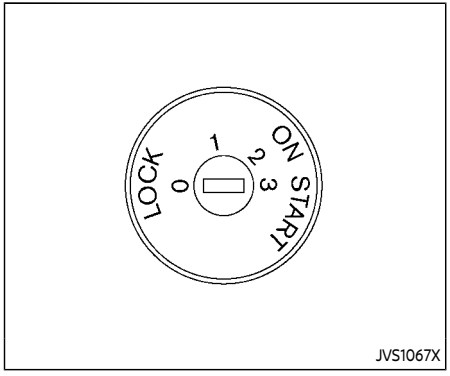

CONTINUOUSLY VARIABLE TRANSMISSION (CVT)

The ignition lock is designed so that the ignition switch cannot be turned to the LOCK position until the shift lever is moved to the P (Park) position. When moving the ignition switch to the LOCK position, to remove the key from the ignition switch, make sure the shift lever is in the P (Park) position.

When the ignition switch cannot be turned to the LOCK position:

1. Move the shift lever to the P (Park) position.
2. Turn the ignition switch slightly in the ON direction.
3. Place the ignition switch in the LOCK position.
4. Remove the key.

If the ignition switch is turned to the LOCK position, the shift lever cannot be moved from the P (Park) position. The shift lever can be moved if the ignition switch is in the ON position with the foot brake pedal depressed.

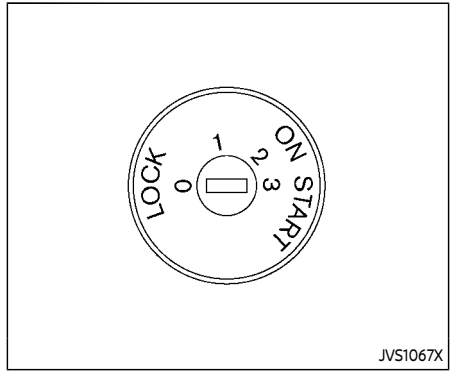

MANUAL TRANSMISSION (MT)

The ignition switch includes a device that helps prevent accidental removal of the key while driving.

The key can only be removed when the ignition switch is in the LOCK position.

KEY POSITIONS

LOCK: Normal parking position (0)

OFF: (Not used) (1)

This position activates electrical accessories such as the radio when the engine is not running.

ON: Normal operating position (2)

This position turns on the ignition system and the electrical accessories.

START: (3)

This position starts the engine. As soon as the engine has started, release the key. It automatically returns to the ON position.

WARNING

Do not operate the push-button ignition switch while driving the vehicle except in an emergency. (The engine will stop when the ignition switch is pushed 3 consecutive times or the ignition switch is pushed and held for more than 2 seconds.) If the engine stops while the vehicle is being driven, this could lead to a crash and serious injury.

Before operating the push-button ignition switch, be sure to move the shift lever to the P (Park) position (for Continuously Variable Transmission (CVT) models) or the shift lever to the N (Neutral) position (for Manual Transmission (MT) models).

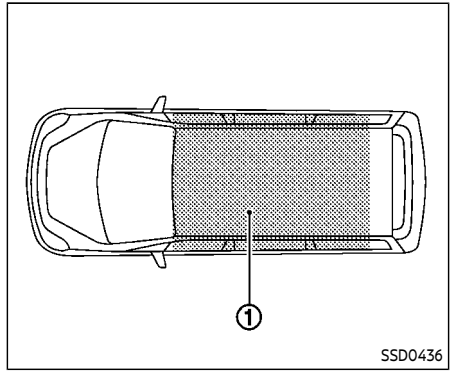

OPERATING RANGE FOR ENGINE START FUNCTION

The Intelligent Key can only be used for starting the engine when the Intelligent Key is within the specified operating range ①.

When the Intelligent Key battery is almost discharged or strong radio waves are present near the operating location, the Intelligent Key system's operating range becomes narrower and may not function properly.

If the Intelligent Key is within the operating range, it is possible for anyone, even someone who does not carry the Intelligent Key, to push the ignition switch to

start the engine.

- The cargo room area is not included in the operating range but the Intelligent Key may function.
- If the Intelligent Key is placed on the instrument panel, inside the glove box or door pocket, the Intelligent Key may not function.
- If the Intelligent Key is placed near the door or window outside the vehicle, the Intelligent Key may function.

PUSH-BUTTON IGNITION SWITCH OPERATION

CAUTION

- **Do not leave the vehicle for extended periods of time when the ignition switch is in the ON position and the engine is not running. This can discharge the battery.**
- **Use electrical accessories with the engine running to avoid discharging the vehicle battery. If you must use accessories while the engine is not running, do not use them for extended periods of time and do not use multiple electrical accessories at the same time.**

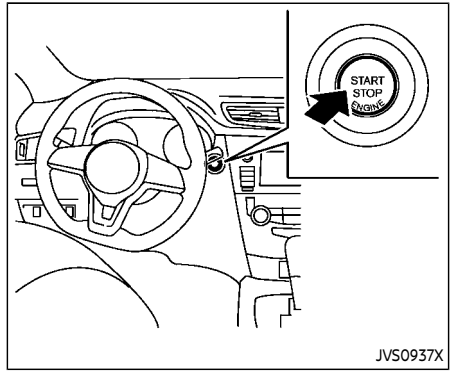

When the ignition switch is pushed without depressing the brake pedal (CVT models) or the clutch pedal (MT models), the ignition switch will illuminate.

Push the ignition switch center:

- once to change to ON.
- two times to change to OFF.

The ignition switch will automatically return to the LOCK position when any door is either opened or closed with the switch in the OFF position.

Continuously Variable Transmission (CVT) models

The ignition lock is designed so that the ignition switch position cannot be switched to OFF until the shift lever is moved to the P (Park) position.

When the ignition switch cannot be pushed toward the OFF position, proceed as follows:

1. Move the shift lever into the P (Park) position.
2. Push the ignition switch. The ignition switch position will change to the ON position.
3. Push the ignition switch again to the OFF position.

The shift lever can be moved from the P (Park) position if the ignition switch is in the ON position and the brake pedal is depressed.

PUSH-BUTTON IGNITION SWITCH POSITIONS

LOCK (Normal parking position)

The ignition switch can only be locked at this position.

The ignition switch will lock when any door is opened or closed with the ignition switched off.

ON (Normal operating position)

The ignition system and the electrical accessory power activate at this position without the engine turned on.

The ON position has a battery saver feature that will place the ignition switch in the OFF position, if the vehicle is not running, after some time under the following conditions:

- all doors are closed.
- shift lever is in P (Park) position (CVT model) or N (Neutral) position (MT model).

The battery saver feature will be cancelled if any of the following occur:

- any door is opened.
- shift lever is moved out of the P (Park) position (CVT model).
- ignition switch changes position.

OFF position

The engine is turned off in this position.

Auto ACC position

With the vehicle in the P (Park) position (CVT models) or the N (Neutral) position (MT models), the Intelligent Key with you and the ignition placed from ON to OFF, the radio can still be used for a period of time, or until the driver's door is opened. After a period of time, functions such as radio, navigation (if so equipped), and Bluetooth® Hands-Free Phone System may be restarted by turning on the audio system (See "Audio system" (P.4-38) in this manual), or by the UNLOCK button on the Intelligent Key for up to a total of 30 minutes.

EMERGENCY ENGINE SHUT OFF

To shut off the engine in an emergency situation while driving, perform the following procedure:

- Rapidly push the push-button ignition switch 3 consecutive times in less than 1.5 seconds, or
- Push and hold the push-button ignition switch for more than 2 seconds.

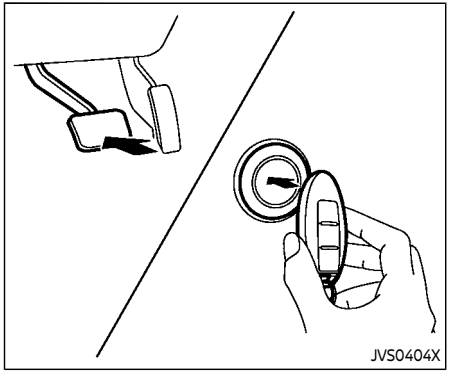

INTELLIGENT KEY BATTERY DISCHARGE

If the battery of the Intelligent Key is discharged, or environmental conditions interfere with the Intelligent Key operation, start the engine according to the following procedure:

1. Move the shift lever to the P (Park) position (for CVT models) or the shift lever to the N (Neutral) position (for MT models).
2. Firmly apply the foot brake.
3. Touch the ignition switch with the Intelligent Key as illustrated. (A chime will sound.)
4. Push the ignition switch while depressing the brake pedal within 10 seconds after the chime sounds. The engine will start.

After step 3 is performed, when the ignition switch is pushed without depressing the brake pedal, the ignition switch position will change to ACC.

NOTE:

- **When the ignition switch is pushed to the ON position or the engine is started by the above procedures, the "Key Battery Low" warning appears (on the Vehicle information display) even if the Intelligent Key is inside the vehicle. This is not a malfunction. To turn off the warning, touch the ignition switch with the Intelligent Key again.**
- **If the "Key Battery Low" warning appears (on the Vehicle information display), replace the battery as soon as possible. (See "Intelligent Key battery replacement" (P.8-23).)**

- Make sure the area around the vehicle is clear.
- Check fluid levels such as engine oil, coolant, brake fluid, and window washer fluid as frequently as possible, or at least whenever you refuel.
- Check that all windows and lights are clean.
- Visually inspect tires for their appearance and condition. Also check tires for proper inflation.
- Lock all doors.
- Position seat and adjust head restraints.
- Adjust inside and outside mirrors.
- Fasten seat belts and ask all passengers to do likewise.
- Check the operation of warning lights when the ignition switch is placed in the ON position. (See "Warning lights, indicator lights and audible reminders" (P.2-10).)

STARTING THE ENGINE (model without Intelligent Key system)

1. Apply the parking brake.
2. **Continuously Variable Transmission (CVT) model:**

   Move the shift lever to the P (Park) or N (Neutral) position. (P is recommended.)

   The starter is designed so that it does not operate unless the shift lever is in either of the above positions.

   Manual Transmission (MT) model:

   Move the shift lever to the N (Neutral) position, and depress the clutch pedal to the floor while starting the engine.
3. Crank the engine **with your foot off the accelerator pedal** by turning the ignition switch to START. Release the switch when the engine starts. If the engine starts, but fails to run, repeat the above procedure.
   - If the engine is very hard to start in extremely cold weather or when restarting, depress the accelerator pedal a little (approximately 1/3 to the floor) and hold it and then crank the engine. Release the accelerator pedal when the engine starts.
   - If the engine is very hard to start because it is flooded, depress the accelerator pedal all the way to the floor and hold it. Crank the engine for 5 - 6 seconds. After cranking the engine, release the accelerator pedal. Crank the engine **with your foot off the accelerator pedal** by turning the ignition switch to START. Release the ignition switch when the engine starts. If the engine starts, but fails to run, repeat the above procedure.

CAUTION

Do not operate the starter for more than 15 seconds at a time. If the engine does not start, turn the ignition switch off and wait 10 seconds before cranking again, otherwise the starter could be damaged.

Do not turn the ignition switch to the START position unless the engine and starter have stopped moving. Attempting to start the engine while the engine or starter is moving may cause damage.

4. **Warm-up**

   Allow the engine to idle for at least 30 seconds after starting. Do not race the engine while warming it up. Drive at moderate speed for a short distance first, especially in cold weather. In cold weather, keep the engine running for a minimum of 2 - 3 minutes before shutting it off. Starting and stopping the engine over a short period of time may make the vehicle more difficult to start.
5. To stop the engine, shift the shift lever to the P (Park) position (CVT model) or N (Neutral) position (MT model) and turn the ignition switch to the OFF position.

NOTE:

Care should be taken to avoid situations that can lead to potential battery discharge and potential no-start conditions such as:

1. **Installation or extended use of electronic accessories that consume battery power when the engine is not running (Phone chargers, GPS, DVD players, etc.)**
2. **Vehicle is not driven regularly and/or only driven short distances.**

In these cases, the battery may need to be charged to maintain battery health.

STARTING THE ENGINE (model with Intelligent Key system)

1. Apply the parking brake.
2. **Continuously Variable Transmission (CVT) model:**

   Move the shift lever to the P (Park) or N (Neutral) position. (P is recommended.)

   The starter is designed not to operate unless the shift lever is in either of the above positions.

   Manual Transmission (MT) model:

   Move the shift lever to the N (Neutral) position. Depress the clutch pedal fully to the floor.

   The starter is designed not to operate unless the clutch pedal is fully depressed.

   The Intelligent Key must be carried when operating the ignition switch.
3. Push the ignition switch to the ON position. Depress the brake pedal (CVT models) or the clutch pedal (MT models) and push the ignition switch to start the engine.

   To start the engine immediately, push and release the ignition switch while depressing the brake pedal (CVT models) or the clutch pedal (MT models) with the ignition switch in any position.

   - If the engine is very hard to start in extremely cold weather or when restarting, depress the accelerator pedal a little (approximately 1/3 to the floor) and while holding, crank the engine. Release the accelerator pedal when the engine starts.
   - If the engine is very hard to start because it is flooded, depress the accelerator pedal all the way to the floor and hold it. Push the ignition switch to the ON position to start cranking the engine. After 5 or 6 seconds, stop cranking by pushing the ignition switch to OFF. After cranking the engine, release the accelerator pedal. Crank the engine **with your foot off the accelerator pedal** by depressing the brake pedal and pushing the push-button ignition switch to start the engine. If the engine starts, but fails to run, repeat the above procedure.

CAUTION

Do not operate the starter for more than 15 seconds at a time. If the engine does not start, push the ignition switch to OFF and wait 10 seconds before cranking again, otherwise the starter could be damaged.

4. **Warm-up**

   Allow the engine to idle for at least 30 seconds after starting. Do not race the engine while warming it up. Drive at moderate speed for a short distance first, especially in cold weather. In cold weather, keep the engine running for a minimum of 2 - 3 minutes before shutting it off. Starting and stopping the engine over a short period of time may make the vehicle more difficult to start.

   When racing the engine up to 4,000 rpm or more under no load condition, the engine will enter the fuel cut mode.
5. To stop the engine, move the shift lever to the P (Park) position (CVT models) or move the shift lever to the N (Neutral) position (MT models), and push the ignition switch to the OFF position.

NOTE:

Care should be taken to avoid situations that can lead to potential battery discharge and potential no-start conditions such as:

1. **Installation or extended use of electronic accessories that consume battery power when the engine is not running (Phone chargers, GPS, DVD players, etc.)**

2. **Vehicle is not driven regularly and/or only driven short distances.**

In these cases, the battery may need to be charged to maintain battery health.

REMOTE ENGINE START (if so equipped)

Vehicles started with the remote engine start function require the ignition switch to be placed in the ON position before the shift lever can be moved from the P (Park) position. To place the ignition switch in the ON position, perform the following steps:

1. Make sure that the Intelligent Key is carried with you.
2. Depress the brake pedal.
3. Push the ignition switch once to the ON position.

For additional information about the remote engine start function, see "Remote engine start" (P.3-22).

CONTINUOUSLY VARIABLE TRANSMISSION (CVT)

The Continuously Variable Transmission (CVT) in your vehicle is electronically controlled to produce maximum power and smooth operation.

The recommended operating procedures for this transmission are shown on the following pages. Follow these procedures for maximum vehicle performance and driving enjoyment.

Engine power may be automatically reduced to protect the CVT if the engine speed increases quickly when driving on slippery roads or while being tested on some dynamometers.

Starting the vehicle

1. After starting the engine, fully depress the foot brake pedal before moving the shift lever out of the P (Park) position.

   This CVT is designed so that the foot brake pedal must be depressed before shifting from P (Park) to any driving position while the ignition switch is in the ON position.

   The shift lever cannot be moved out of the P (Park) position and into any of the other positions if the ignition switch is placed in the LOCK or OFF position.
2. Keep the foot brake pedal depressed and move the shift lever to a driving position.
3. Release the parking brake and foot brake pedal, and then gradually start the vehicle in motion.

WARNING

- **Do not depress the accelerator pedal while shifting from P (Park) or N (Neutral) to R (Reverse), D (Drive), or manual shift mode. Always depress the brake pedal until shifting is completed. Failure to do so could cause you to lose control and have an accident.**
- **Cold engine idle speed is high, so use caution when shifting into a forward or reverse gear before the engine has warmed up.**
- **Never shift to either the P (Park) or R (Reverse) position while vehicle is moving forward and P (Park) or D (Drive) while the vehicle is reversing. This could cause an accident or damage the transmission.**

- **Do not downshift abruptly on slippery roads. This may cause a loss of control.**

CAUTION

- **To avoid possible damage to your vehicle; when stopping the vehicle on an uphill grade, do not hold the vehicle by depressing the accelerator pedal. The foot brake should be used for this purpose.**
- **Except in an emergency, do not shift to the N (Neutral) position while driving. Coasting with the transmission in the N (Neutral) position may cause serious damage to the transmission.**

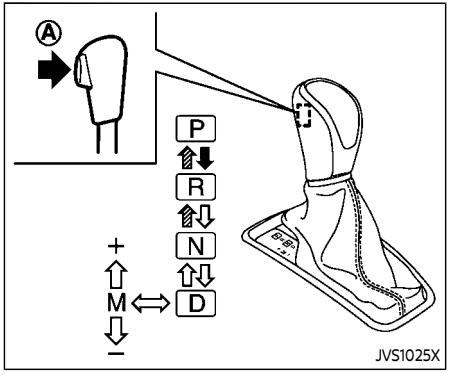

To move the shift lever,

➡: Push the button Ⓐ while depressing the brake pedal.

⇨: Push the button Ⓐ.

⇨: Just move the shift lever.

Shifting

After starting the engine, fully depress the brake pedal, push the shift lever button and move the shift lever from the P (Park) position to any of the desired shift positions.

WARNING

Apply the parking brake if the shift lever is in any position while the engine is not running. Failure to do so could cause the vehicle to move unexpectedly or roll away and result in serious personal injury or property damage.

CAUTION

Use the P (Park) or R (Reverse) position only when the vehicle is completely stopped.

If the ignition switch is placed in the OFF or ACC position for any reason while the shift lever is in any positions other than the P (Park), the ignition switch cannot be placed in the LOCK position.

If the ignition switch cannot be placed in the LOCK position, perform the following steps:

1. Apply the parking brake when the vehicle is stopped.
2. Place the ignition switch in the ON position while depressing the foot

brake pedal.

3. Move the shift lever to the P (Park) position.
4. Place the ignition switch in the LOCK position.

CAUTION

To prevent transmission damage, move the shift lever to the P (Park) or R (Reverse) position only when the vehicle is completely stopped.

P (Park):

Use this position when the vehicle is parked or when starting the engine. Make sure the vehicle is completely stopped. **The brake pedal must be depressed and the shift lever button pushed in to move the shift lever from N (Neutral) or any drive position to P (Park).** Apply the parking brake. When parking on a hill, apply the parking brake first, then move the shift lever to the P (Park) position.

R (Reverse):

Use this position to back up. Make sure the vehicle is completely stopped before selecting the R (Reverse) position. **The brake pedal must be depressed and the shift lever button pushed in to move the shift lever from P (Park), N (Neutral) or any driving position to R (Reverse).**

N (Neutral):

Neither forward nor reverse gear is engaged. The engine can be started in this position. You may shift to N (Neutral) and restart a stalled engine while the vehicle is moving.

D (Drive):

Use this position for all normal forward driving.

Manual shift mode

When the shift lever is shifted from the D (Drive) position to the manual shift gate, the transmission enters the manual shift mode. Shift ranges can be selected manually by moving the shift lever up or down.

In the manual shift mode, the shift range is displayed on the position indicator in the meter.

Shift ranges up or down one by one as follows:

M1 ⇄ M2 ⇄ M3 ⇄ M4 ⇄ M5 ⇄ M6 ⇄ M7

- When shifting up, move the shift lever to the + (up) side. The transmission shifts to a higher range.
- When shifting down, move the shift lever to the – (down) side. The transmission shifts to a lower range.
- Moving the shift lever to the same side twice will shift the ranges in succession. However, if this motion is rapidly done, the second shifting may not be completed properly.
- When canceling the manual shift mode, return the shift lever to the D (Drive) position. The transmission returns to the normal driving mode.

M7 (7th):

Use this position for all normal forward driving.

However, you need to shift down the gears manually when accelerating or passing another vehicle.

M6 (6th) and M5 (5th):

Use these positions when driving up long slopes, or for engine braking when driving down long slopes.

M4 (4th), M3 (3rd) and M2 (2nd) :

Use these positions for hill climbing or engine braking on downhill grades.

M1 (1st):

Use this position when climbing steep hills slowly or driving slowly through deep snow, sand or mud, or for maximum engine braking on steep downhill grades.

- Remember not to drive at high speeds for extended periods of time in lower than M7 range. This reduces fuel economy.
- **In the manual shift mode, the transmission may not shift to the selected range. This helps maintain driving performance and reduces the chance of vehicle damage or loss of control.**
- **In the manual shift mode, the transmission automatically shifts down to 1st gear before the vehicle comes to a stop. When accelerating again, it is necessary to shift up to the desired range.**
- When the CVT fluid temperature is extremely low, the manual shift mode may not work and automatically shift as a drive mode. This is not a malfunction. In this case, return the shift lever to the D (Drive) position and drive for a while and then shift to the manual shift mode.
- When the CVT fluid temperature is high, the shift range may upshift at a lower engine speed than usual. This is not a malfunction.

Accelerator downshift — In D position —

For passing or hill climbing, fully depress the accelerator pedal to the floor. This shifts the transmission down into a lower gear, depending on the vehicle speed.

High fluid temperature protection mode

This transmission has a high fluid temperature protection mode. If the fluid temperature becomes too high (for example, when climbing steep grades in high temperature with heavy loads), engine power and, under some conditions, vehicle speed will be decreased automatically to reduce the chance of transmission damage. Vehicle speed can be controlled with the accelerator pedal, but the engine and vehicle speed may be limited.

Fail-safe

If the vehicle is driven under extreme conditions, such as excessive wheel spinning and subsequent hard braking, the fail-safe system may be activated. The MIL may illuminate to indicate the fail-safe mode is activated. (See "Malfunction Indicator Light (MIL)" (P.2-16).) This will occur even if all electrical circuits are functioning properly. In this case, place the ignition switch in the OFF position and wait for 10 seconds. Then turn the switch back to the ON position. The vehicle should return to its normal operating condition. If it does not return to its normal operating condition, have the transmission checked and repaired, if necessary. It is recommended you visit a NISSAN dealer for this service.

WARNING

When the high fluid temperature protection mode or fail-safe operation occurs, vehicle speed may be gradually reduced. The reduced speed may be lower than other traffic, which could increase the chance of a collision. Be especially careful when driving. If necessary, pull to the side of the road at a safe

place and allow the transmission to return to normal operation, or have it repaired if necessary.

Adaptive Shift Control (ASC)

The Adaptive Shift Control automatically operates when the transmission is in the "D" (Drive) position and selects an appropriate gear depending on the road conditions such as uphill or downhill.

Control on uphill and curving roads:

A low gear is maintained that suits the degree of the slope to allow smooth driving with a small number of shifts.

Control on downhill roads:

The Adaptive Shift Control shifts to a low gear that suits the degree of the slope when the accelerator pedal is depressed, and uses the engine braking to help driving in the downhill.

Control on winding roads:

A low gear is maintained on continuous curves that involve repeated acceleration and deceleration, so that smooth acceleration is available instantly when the accelerator pedal is depressed.

NOTE:

- **Adaptive Shift Control may not operate when the transmission oil temperature is low immediately after the start of driving or when it is very hot.**
- **During some driving situations, hard braking for example, the Adaptive Shift Control may automatically operate. The transmission may automatically shift to a lower gear for engine braking. This increases engine speed but not vehicle speed. Vehicle speed is controlled by the accelerator pedal when the vehicle is in the Adaptive Shift Control mode.**
- **When the Adaptive Shift Control operates, the transmission sometimes maintains a lower gear for a longer period of time than when Adaptive Shift Control is not operating. Engine speed will be higher for a specific vehicle speed while Adaptive Shift Control is operating than when Adaptive Shift Control is not operating.**

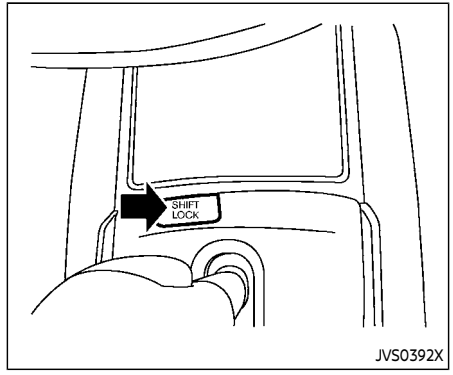

Shift lock release

If the battery charge is low or discharged, the shift lever may not be moved from the P (Park) position even with the brake pedal depressed and the shift lever button pushed.

To move the shift lever, perform the following procedure:

1. Place the ignition switch in the OFF or LOCK position.
2. Apply the parking brake.
3. Remove the shift lock release cover (shown in the illustration above) using a suitable tool.

4. Insert the mechanical key and push down the shift lock release.
5. Push the shift lever button and move the shift lever to the N (Neutral) position while holding down the shift lock release.

Place the ignition switch in the ON position. The vehicle may be moved to the desired location.

Replace the removed shift lock release cover after the operation.

If the shift lever cannot be moved out of the P (Park) position, have the CVT system checked as soon as possible. It is recommended you visit a NISSAN dealer for this service.

WARNING

If the shift lever cannot be moved from the P (Park) position while the engine is running and the brake pedal is depressed, the stop lights may not work. Malfunctioning stop lights could cause an accident injuring yourself and others.

MANUAL TRANSMISSION (MT)

WARNING

- **Do not downshift abruptly on slippery roads. This may cause a loss of control.**
- **Do not over-rev the engine when shifting to a lower gear. This may cause a loss of control or engine damage.**
- **When the high fluid temperature protection mode or fail-safe operation occurs, vehicle speed may be gradually reduced. The reduced speed may be lower than other traffic, which could increase the chance of a collision. Be especially careful when driving. If necessary, pull to the side of the road at a safe place and allow the transmission to return to normal operation, or have it repaired if necessary.**

CAUTION

- **Do not rest your foot on the clutch pedal while driving. This may damage the clutch.**
- **Fully depress the clutch pedal before shifting to help prevent transmission damage.**
- **Stop your vehicle completely before shifting into R (Reverse).**
- **When the vehicle is stopped for a period of time, for example at a stop light, shift to N (Neutral) and release the clutch pedal with the foot brake applied.**

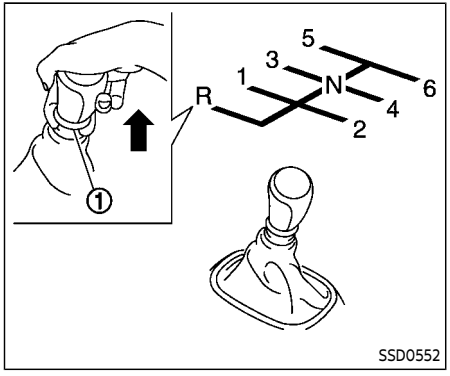

Shifting

To change gears, or when upshifting or downshifting, fully depress the clutch pedal, shift into the appropriate gear, then slowly and smoothly release the clutch pedal.

To ensure smooth gear changes, be sure to fully depress the clutch pedal before operating the shift lever. If the clutch pedal is not fully depressed before the transmission is shifted, a gear noise may be heard. Transmission damage could occur.

Start the vehicle in 1st gear and shift to 2nd, 3rd, 4th, 5th and 6th gear in sequence according to vehicle speed.

To back up, pull the shift lever ring ① upward and then move it to the R (Reverse) gear after stopping the vehicle completely.

The shift lever ring returns to its original position when the shift lever is moved to the N (Neutral) position.

If it is difficult to move the shift lever into the R (Reverse) or 1st gear, shift to the N (Neutral) position, and then release the clutch pedal once. Fully depress the clutch pedal again and shift into the R (Reverse) or 1st gear.

Suggested maximum speed in each gear

Downshift to a lower gear if the engine is not running smoothly, or if you need to accelerate.

Do not exceed the maximum suggested speed (shown below) in any gear. For level road driving, use the highest gear suggested for that speed. Always observe posted speed limits, and drive according to the road conditions, which will ensure safe operation. Do not over-rev the engine when shifting to a lower gear as it may cause engine damage or loss of vehicle control.

Gear	MPH (km/h)
1st	28 (46)
2nd	50 (81)
3rd	70 (112)
4th	90 (145)
5th	—
6th	—

WARNING

- **Never drive the vehicle with the parking brake applied. The brake will overheat and fail to operate and will lead to an accident.**
- **Never release the parking brake from outside the vehicle. If the vehicle moves, it will be impossible to push the foot brake pedal and will lead to an accident.**
- **Never use the shift lever in place of the parking brake. When parking, be sure the parking brake is fully applied.**
- **To help avoid risk of injury or death through unintended operation of the vehicle and/or its systems, do not leave children, people who require the assistance of others or pets unattended in your vehicle. Additionally, the temperature inside a closed vehicle on a warm day can quickly become high enough to cause a significant risk of injury or death to people and pets.**

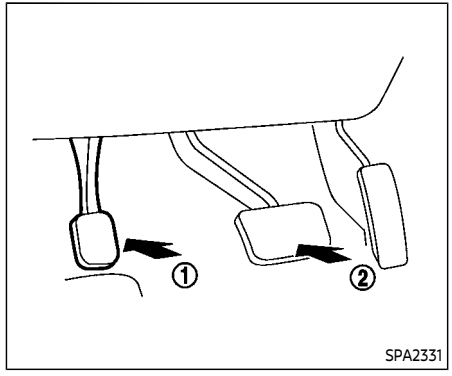

PEDAL TYPE

To apply the parking brake, firmly depress the parking brake pedal ①.

To release the parking brake, depress and hold the foot brake ② and then fully depress and release the parking brake pedal ①.

Before driving, be sure that the brake warning light has turned off.

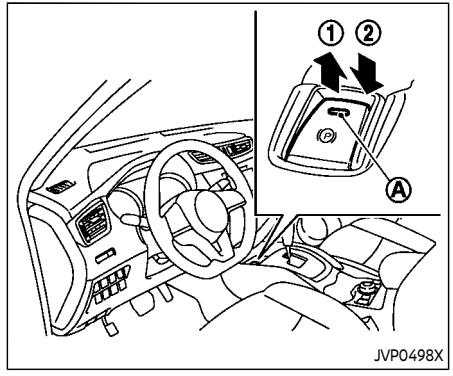

SWITCH TYPE (models with electronic parking brake system)

The electronic parking brake can be applied or released automatically or by operating the parking brake switch.

Automatic operation

With the vehicle stationary, the electronic parking brake is automatically applied when the engine is turned off with the ignition switch.

The electronic parking brake is automatically released as soon as the vehicle starts while the accelerator pedal is depressed.

WARNING

- **The electronic parking brake will not be automatically applied when the engine is stopped without using the ignition switch (for example, by engine stalling).**

  Without the vehicle stationary, the electronic parking brake will not be automatically applied even if the engine is turned off with the ignition switch.
- **Before leaving the vehicle, move the shift lever to the 1 (1st) or R (Reverse) position and check that the electronic parking brake warning light is illuminated to confirm that the electronic parking brake is applied. The electronic parking brake warning light will remain on for a period of time after the driver's door is locked.**

CAUTION

When parking in an area where the outside temperature is below 32°F (0°C), do not apply the parking brake to prevent it from freezing.

For safe parking, place the shift lever in the 1 (1st) or R (Reverse) position and securely block the wheels.

NOTE:
- **To keep the electronic parking brake released after the engine is turned off, place the ignition switch in the OFF position, depress the brake pedal and push down the parking brake switch before opening the driver's door.**
- **If a malfunction occurs in the electric parking brake system (for example, due to battery discharge), it is recommended to contact a NISSAN dealer.**

Manual operation

The electronic parking brake will not be automatically applied if the engine is stopped without using the ignition switch (for example, by engine stalling). In such a case, you have to apply the parking brake manually.

To apply: Pull the switch up ①. The indicator light Ⓐ will illuminate.

To release: With the ignition switch in the ON position, depress the brake pedal and push the switch down ②. The indicator light Ⓐ will turn off.

Before driving, check that the electronic parking brake warning light (P) goes out. For additional information, see "Warning lights, indicator lights and audible reminders" (P.2-10).

NOTE:
- **A buzzer will sound if the vehicle is driven without releasing the parking brake. See "Audible reminders" (P.2-17).**
- **While the electronic parking brake is applied or released, an operating sound is heard from the lower side of the rear seat. This is normal and does not indicate a malfunction.**
- **When the electronic parking brake is frequently applied and released in a short period of time, the parking brake may not operate in order to prevent the parking brake system from overheating. If this occurs, operate the electronic parking brake switch again after waiting approximately 1 minute.**
- **If the electronic parking brake must be applied while driving in an emergency, pull up and hold the parking brake switch. When you release the parking brake switch, the parking brake will be released.**
- **While pulling up the electronic parking brake switch during driving, the**

parking brake is applied and a chime sounds. The electronic parking brake warning light in the meter and in the parking brake switch illuminate. This does not indicate a malfunction. The electronic parking brake warning light in the meter and in the parking brake switch turn off when the parking brake is released.

- **When pulling the electronic parking brake switch up with the ignition switch in the OFF or ACC position, the parking brake switch indicator light will continue to illuminate for a short period of time.**

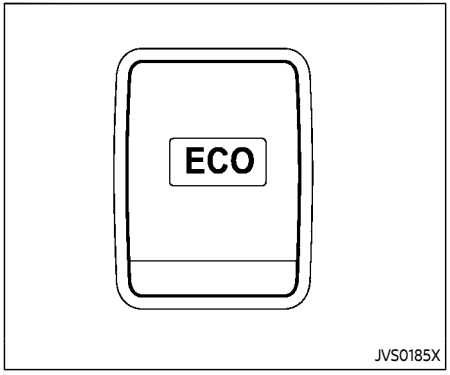

The ECO mode system helps to enhance the fuel economy by controlling the engine and CVT operation (for CVT models) automatically to avoid rapid acceleration.

To turn on the ECO mode system, push the ECO switch. The ECO mode indicator appears on the meter.

To turn off the ECO mode, push the ECO switch again. The ECO mode indicator will turn off.

- The ECO mode system cannot be turned off while the accelerator pedal is depressed even if the ECO switch is pushed to OFF. Release the accelerator pedal to turn off the ECO mode system.
- The ECO mode system will turn off automatically if a malfunction occurs in the system.
- Turn off the ECO mode system when acceleration is required such as when:
  - driving with a heavy load of passengers or cargo in the vehicle
  - driving on a steep uphill slope

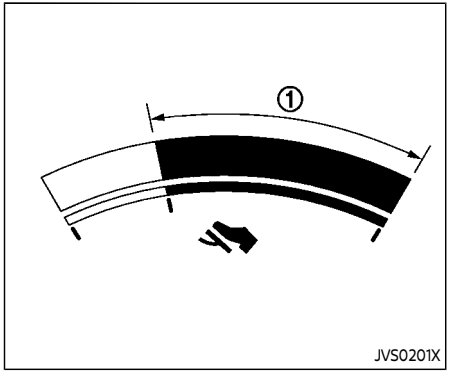

ECO PEDAL GUIDE FUNCTION

Use the ECO Pedal Guide function for improving fuel economy.

When the ECO Pedal Guide bar is in the green range ①, it indicates that the vehicle is driven within range of economy drive.

If the ECO Pedal Guide bar is out of the green range, it indicates that the accelerator pedal is depressed over the range of economy drive.

The ECO Pedal Guide bar is not displayed when:

- The cruise control system (if so equipped) is operating.
- The Intelligent Cruise Control (ICC) system (if so equipped) is operating.
- The vehicle speed is less than approximately 2 MPH (4 km/h).
- The shift lever is in the P (Park) (CVT model), N (Neutral) or R (Reverse) position.

To activate or deactivate the ECO Pedal Guide function, see "Settings" (P.2-19).

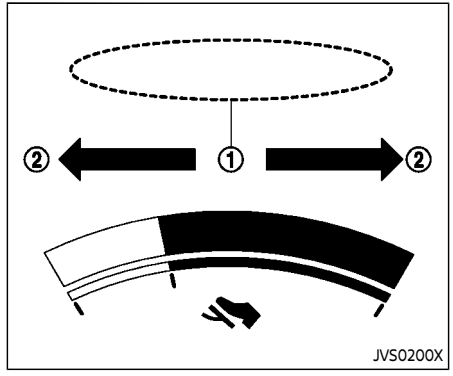

AMBIENT ECO

The ambient ECO ① is displayed according to the accelerator pedal operation, while driving the vehicle in ECO mode.

The ambient ECO will illuminate in the directions of ② as the driving pattern becomes more ECO friendly.

To activate or deactivate the ambient ECO, see "Settings" (P.2-19).

The ambient ECO is not displayed in the following conditions

- The vehicle speed is under 6 MPH (10 km/h).
- The shift lever is in the P (Park) (CVT model), N (Neutral) or R (Reverse)

position.

- The cruise control system (if so equipped) is operating.
- The Intelligent Cruise Control (ICC) system (if so equipped) is operating.

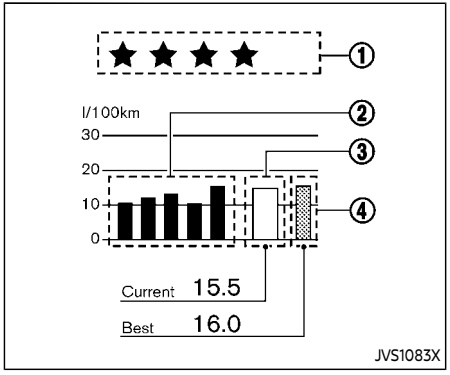

When the ignition switch is in the OFF position, ECO management display appears.

① ECO evaluation
② Previous 5 times (History)
③ Current fuel economy
④ Best fuel economy

ECO DRIVE REPORT

The result of ECO evaluation is displayed when the vehicle is driven for about 10 minutes or more.

①: The more economically you drive, the more ★ appear.

②: The average fuel economy for the previous 5 times will be displayed.

③: The average fuel economy since the last reset will be displayed.

④: The best fuel economy of the past history will be displayed.

LANE DEPARTURE WARNING (LDW) (if so equipped)

WARNING

Failure to follow the warnings and instructions for proper use of the LDW system could result in serious injury or death.

- **This system is only a warning device to inform the driver of a potential unintended lane departure. It will not steer the vehicle or prevent loss of control. It is the driver's responsibility to stay alert, drive safely, keep the vehicle in the traveling lane, and be in control of the vehicle at all times.**

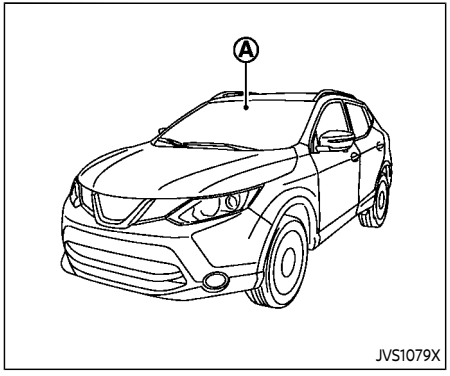

The LDW system warns the driver with the LDW indicator on the vehicle information display and chime that the vehicle is beginning to leave the driving lane.

The LDW system monitors the lane markers on the traveling lane using the camera unit Ⓐ located above the inside mirror.

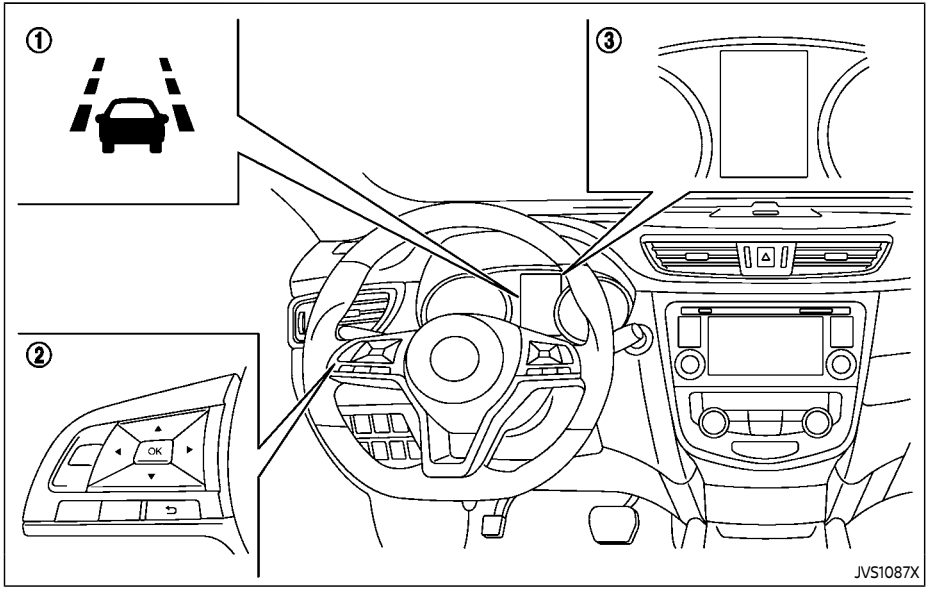

① LDW indicator (on the vehicle information display)

② Steering-wheel-mounted controls (left side)

③ Vehicle information display

LDW SYSTEM OPERATION

The LDW system operates at speeds of approximately 37 MPH (60 km/h) and above and when the lane markings are clear. When the vehicle approaches either the left or the right side of the traveling lane, a warning chime will sound and the LDW indicator on the vehicle information display will blink to alert the driver.

The warning function will stop when the vehicle returns inside of the lane markers.

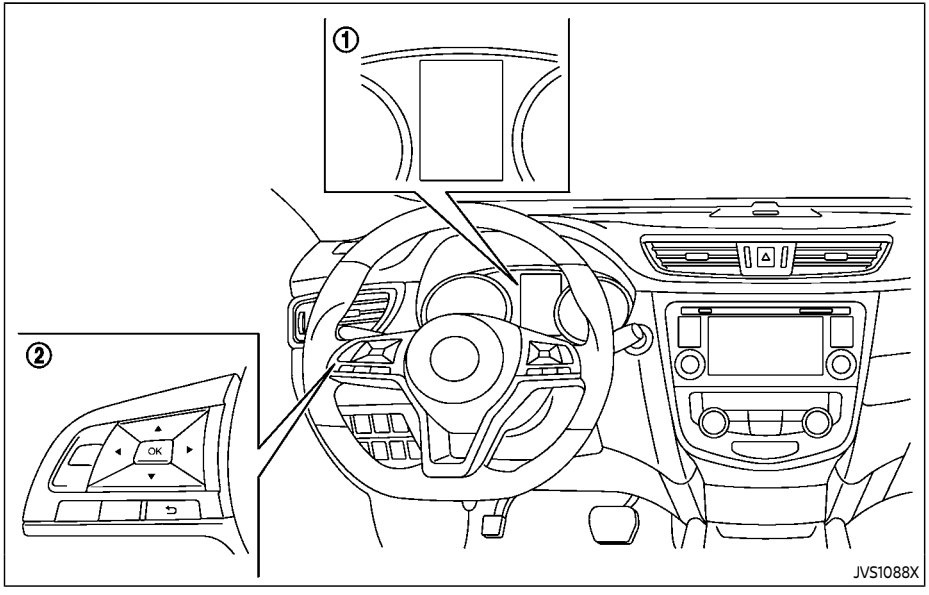

① Vehicle information display

② Steering-wheel-mounted controls (left side)

HOW TO ENABLE/DISABLE THE LDW SYSTEM

Perform the following steps to enable or disable the LDW system.

1. Press the ◀ ▶ button until "Settings" displays in the vehicle information display and then press "OK" button. Use the ⬍ button to select "Driver Assistance". Then press the "OK" button.
2. Select "Driving Aids" and press the "OK" button.
3. Use the ⬍ buttons to navigate in the menu and use the "OK" button to select or change an item:
   - Select "Lane" and press the "OK" button.

     Use the "OK" button to check/uncheck the box for "Warning".

NOTE:

If you disable the LDW system, the system will remain disabled the next time you start the vehicle's engine.

LDW SYSTEM LIMITATIONS

WARNING

Listed below are the system limitations for the LDW system. Failure to follow the warnings and instructions for proper use of the LDW system could result in serious injury or death.

- **The system will not operate at speeds below approximately 37 MPH (60 km/h) or if it cannot detect lane markers.**
- **Excessive noise will interfere with the warning chime sound, and the chime may not be heard.**
- **Do not use the LDW system under the following conditions as it may not function properly:**
  - **During bad weather (rain, fog, snow, etc.).**
  - **When driving on slippery roads, such as on ice or snow.**
  - **When driving on winding or uneven roads.**
  - **When there is a lane closure due to road repairs.**
  - **When driving in a makeshift or temporary lane.**
  - **When driving on roads where the lane width is too narrow.**
  - **When driving without normal tire conditions (for example, tire wear, low tire pressure, installation of spare tire, tire chains, non-standard wheels).**
  - **When the vehicle is equipped with non-original brake parts or suspension parts.**
- **The system may not function properly under the following conditions:**
  - **On roads where there are multiple parallel lane markers; lane markers that are faded or not painted clearly; yellow painted lane markers; non-standard lane markers; or lane markers covered with water, dirt, snow, etc.**
  - **On roads where discontinued lane markers are still detectable.**
  - **On roads where there are sharp curves.**
  - **On roads where there are sharply contrasting objects, such as shadows, snow, water, wheel ruts, seams or lines remaining after road repairs. (The LDW system could detect these items as lane markers.)**
  - **On roads where the traveling lane merges or separates.**
  - **When the vehicle's traveling direction does not align with the lane marker.**
  - **When traveling close to the vehicle in front of you, which obstructs the lane camera unit detection range.**
  - **When rain, snow, dirt or object adheres to the windshield in front of the lane camera unit.**
  - **When the headlights are not bright due to dirt on the lens or if the aiming is not adjusted properly.**
  - **When strong light enters the lane camera unit. (For example, the light directly shines on the front of the vehicle at sunrise or sunset.)**

— When a sudden change in brightness occurs. (For example, when the vehicle enters or exits a tunnel or under a bridge.)

SYSTEM TEMPORARILY UNAVAILABLE

Condition A:

If the vehicle is parked in direct sunlight under high temperature conditions (over approximately 104°F (40°C)) and then started, the LDW system may be deactivated automatically, the LDW indicator will flash and the following message will appear in the vehicle information display.
- "Unavailable: High Cabin Temperature"

When the interior temperature is reduced, the LDW system will resume operating automatically and the LDW indicator will stop flashing.

Condition B:

The warning function of the LDW system is not designed to work under the following conditions:

- When you operate the lane change signal and change traveling lanes in the direction of the signal. (The LDW system will become operable again approximately 2 seconds after the lane change signal is turned off.)
- When the vehicle speed lowers to less than approximately 37 MPH (60 km/h).

Action to take:

After the above conditions have finished and the necessary operating conditions are satisfied, the LDW system will resume.

SYSTEM MALFUNCTION

If the LDW system malfunctions, it will cancel automatically and "Malfunction" will appear in the vehicle information display. If "Malfunction" appears in the vehicle information display, pull off the road to a safe location and stop the vehicle. Place the ignition switch in the OFF position and restart the engine. If "Malfunction" continues to appear in the vehicle information display, have the system checked. It is recommended that you visit a NISSAN dealer for this service.

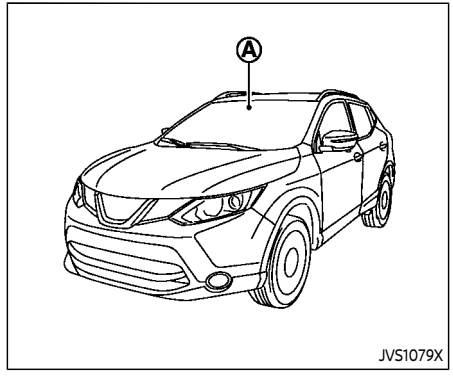

SYSTEM MAINTENANCE

The lane camera unit Ⓐ for the LDW system is located above the inside mirror.

To keep the proper operation of the LDW system and prevent a system malfunction, be sure to observe the following:

- Always keep the windshield clean.
- Do not attach a sticker (including transparent material) or install an accessory near the camera unit.
- Do not place reflective materials, such as white paper or a mirror, on the instrument panel. The reflection of sunlight may adversely affect the camera unit's capability of detecting the lane markers.

- Do not strike or damage the areas around the camera unit. Do not touch the camera lens or remove the screw located on the camera unit. If the camera unit is damaged due to an accident, it is recommended that you visit a NISSAN dealer.

WARNING

Failure to follow the warnings and instructions for proper use of the I-LI system could result in serious injury or death.

- **The I-LI system will not steer the vehicle or prevent loss of control. It is the driver's responsibility to stay alert, drive safely, keep the vehicle in the traveling lane, and be in control of the vehicle at all times.**
- **The I-LI system is primarily intended for use on well-developed freeways or highways. It may not detect the lane markers in certain road, weather, or driving conditions.**

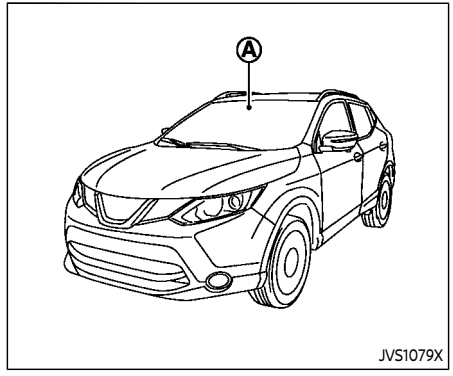

The I-LI system warns the driver if the vehicle has left the center of the traveling lane with the I-LI indicator and chime, and helps assist the driver to return the vehicle to the center of the traveling lane by applying the brakes to the left or right wheels individually (for a short period of time).

The I-LI system monitors the lane markers on the traveling lane using the camera unit Ⓐ located above the inside mirror.

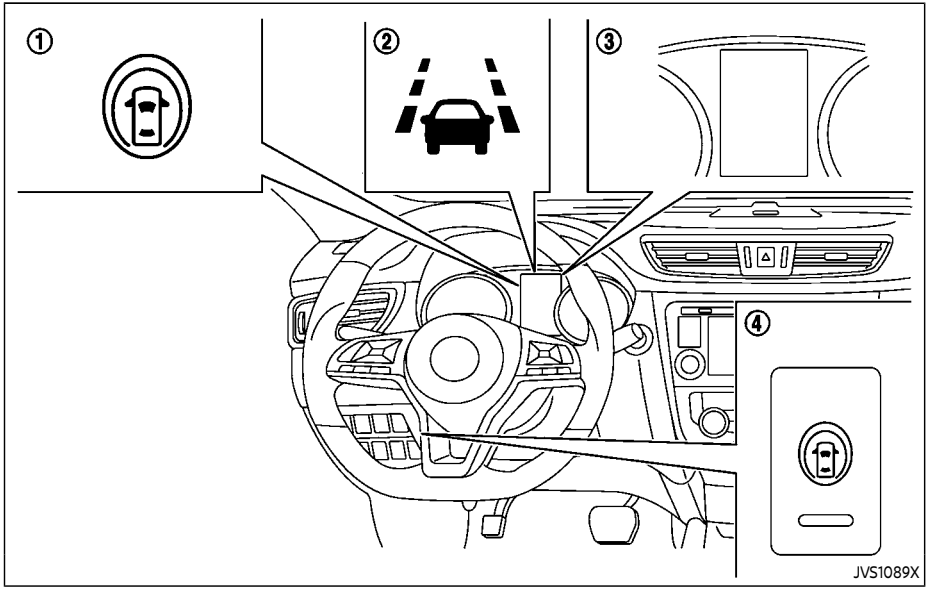

① I-LI ON indicator (on the vehicle information display)

② I-LI indicator (on the vehicle information display)

③ Vehicle information display

④ I-LI switch

I-LI SYSTEM OPERATION

The I-LI system operates above approximately 37 MPH (60 km/h) and when the lane markings are clear. When the vehicle approaches either the left or the right side of the traveling lane, a warning chime will sound and the I-LI indicator (orange) on the vehicle information display will blink to alert the driver. Then, the I-LI system will automatically apply the brakes for a short period of time to help assist the driver to return the vehicle to the center of the traveling lane.

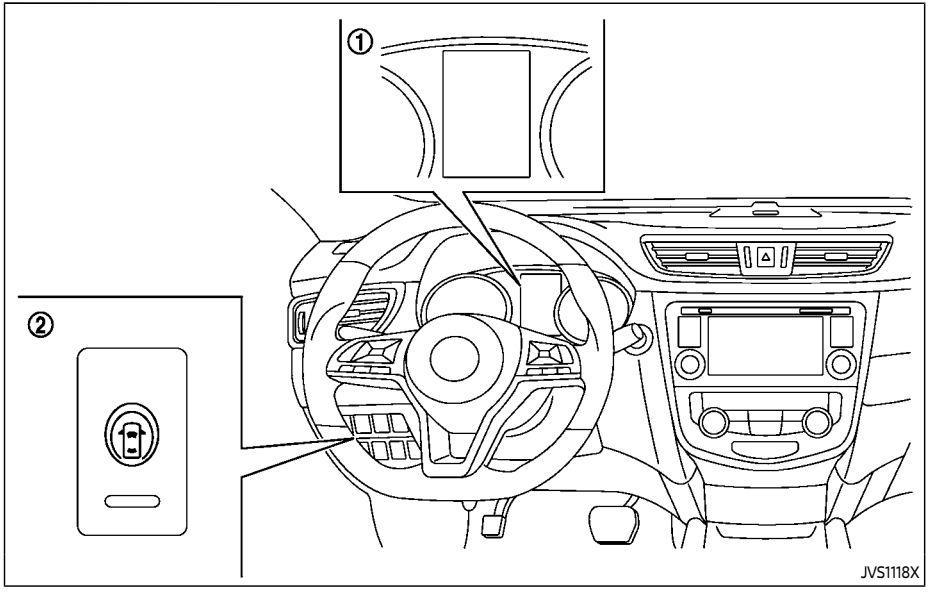

① Vehicle information display
② I-LI switch

HOW TO ENABLE/DISABLE THE I-LI SYSTEM

To enable the I-LI system, push the I-LI switch on the instrument panel after starting the engine. The I-LI ON indicator on the vehicle information display will appear. Push the I-LI switch again to disable the I-LI system. The I-LI ON indicator on the vehicle information display will turn off.

I-LI SYSTEM LIMITATIONS

WARNING

Listed below are the system limitations for the I-LI system. Failure to follow the warnings and instructions for proper use of the I-LI system could result in serious injury or death.

- **The I-LI system may activate if you change lanes without first activating your turn signal or, for example, if a construction zone directs traffic to cross an existing lane marker. If this occurs you may need to apply corrective steering to complete your lane change.**

- Because the I-LI may not activate under the road, weather, and lane marker conditions described in this section, it may not activate every time your vehicle begins to leave its lane and you will need to apply corrective steering.
- The I-LI system will not operate at speeds below approximately 37 MPH (60 km/h) or if it cannot detect lane markers.
- Do not use the I-LI system under the following conditions as it may not function properly:
  - During bad weather (rain, fog, snow, etc.).
  - When driving on slippery roads, such as on ice or snow.
  - When driving on winding or uneven roads.
  - When there is a lane closure due to road repairs.
  - When driving in a makeshift or temporary lane.
  - When driving on roads where the lane width is too narrow.
  - When driving without normal tire conditions (for example, tire wear, low tire pressure, installation of spare tire, tire chains, non-standard wheels).
  - When the vehicle is equipped with non-original brake parts or suspension parts.
- The system may not function properly under the following conditions:
  - On roads where there are multiple parallel lane markers; lane markers that are faded or not painted clearly; yellow painted lane markers; non-standard lane markers; or lane markers covered with water, dirt, snow, etc.
  - On roads where discontinued lane markers are still detectable.
  - On roads where there are sharp curves.
  - On roads where there are sharply contrasting objects, such as shadows, snow, water, wheel ruts, seams or lines remaining after road repairs. (The I-LI system could detect these items as lane markers.)
  - On roads where the traveling lane merges or separates.
  - When the vehicle's traveling direction does not align with the lane marker.
  - When traveling close to the vehicle in front of you, which obstructs the lane camera unit detection range.
  - When rain, snow or dirt adheres to the windshield in front of the lane camera unit.
  - When the headlights are not bright due to dirt on the lens or if the aiming is not adjusted properly.
  - When strong light enters the lane camera unit. (For example, the light directly shines on the front of the vehicle at sunrise or sunset.)
  - When a sudden change in brightness occurs. (For example, when the vehicle enters or exits a tunnel or under a bridge.)
- Excessive noise will interfere with the warning chime sound, and the chime may not be heard.

While the I-LI system is operating, you may hear a sound of brake operation. This is normal and indicates that the I-LI system is operating properly.

SYSTEM TEMPORARILY UNAVAILABLE

Condition A:

The warning and assist functions of the I-LI system are not designed to work under the following conditions:

- When you operate the lane change signal and change the traveling lanes in the direction of the signal. (The I-LI system will be deactivated for approximately 2 seconds after the lane change signal is turned off.)
- When the vehicle speed lowers to less than approximately 37 MPH (60 km/h).

Action to take:

After the above conditions have finished and the necessary operating conditions are satisfied, the warning and assist functions will resume.

Condition B:

The assist function of the I-LI system is not designed to work under the following conditions (warning is still functional):

- When the brake pedal is depressed.
- When the steering wheel is turned as far as necessary for the vehicle to change lanes.
- When the vehicle is accelerated during the I-LI system operation.
- When the Intelligent Cruise Control (ICC) approach warning occurs (if so equipped).
- When the hazard warning flashers are operated.
- When driving on a curve at high speed.

Action to take:

After the above conditions have finished and the necessary operating conditions are satisfied, the I-LI system application of the brakes will resume.

Condition C:

If the following messages appear in the vehicle information display, a chime will sound and the I-LI system will be turned off automatically.

- "Not available: Poor Road Conditions":
  When the VDC system (except Traction Control System (TCS) function) or ABS operates.
- "Currently unavailable":
  When the VDC system is turned off.

Action to take:

When the above conditions no longer exist, turn off the I-LI system. Push the I-LI switch again to turn the I-LI system back on.

Temporary disabled status at high temperature:

If the vehicle is parked in direct sunlight under high temperature conditions (over approximately 104°F (40°C)) and then the I-LI system is turned on, the I-LI system may be deactivated automatically and the following message will appear on the vehicle information display: "Unavailable: High Cabin Temperature." When the interior temperature is reduced, the system will resume operating automatically.

SYSTEM MALFUNCTION

If the I-LI system malfunctions, it will cancel automatically. The I-LI indicator (orange) will illuminate and the "Malfunction" warning message appear in the display.

If the I-LI indicator (orange) illuminates in the display, pull off the road to a safe location. Turn the engine off and restart the engine. If the I-LI indicator (orange) continues to illuminate, have the I-LI system checked. It is recommended that you visit a NISSAN dealer for this service.

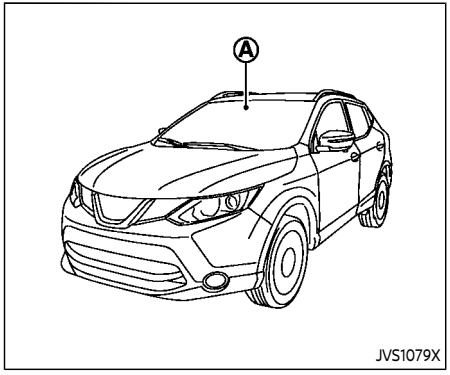

SYSTEM MAINTENANCE

The lane camera unit Ⓐ for the I-LI system is located above the inside mirror. To keep the proper operation of the I-LI system and prevent a system malfunction, be sure to observe the following:

- Always keep the windshield clean.
- Do not attach a sticker (including transparent material) or install an accessory near the camera unit.
- Do not place reflective materials, such as white paper or a mirror, on the instrument panel. The reflection of sunlight may adversely affect the camera unit's capability of detecting the lane markers.
- Do not strike or damage the areas around the camera unit. Do not touch the camera lens or remove the screw located on the camera unit. If the camera unit is damaged due to an accident, it is recommended that you visit a NISSAN dealer.

BLIND SPOT WARNING (BSW) (if so equipped)

WARNING

Failure to follow the warnings and instructions for proper use of the BSW system could result in serious injury or death.

- **The BSW system is not a replacement for proper driving procedure and is not designed to prevent contact with vehicles or objects. When changing lanes, always use the side and rear mirrors and turn and look in the direction your vehicle will move to ensure it is safe to change lanes. Never rely solely on the BSW system.**

The BSW system helps alert the driver of other vehicles in adjacent lanes when changing lanes.

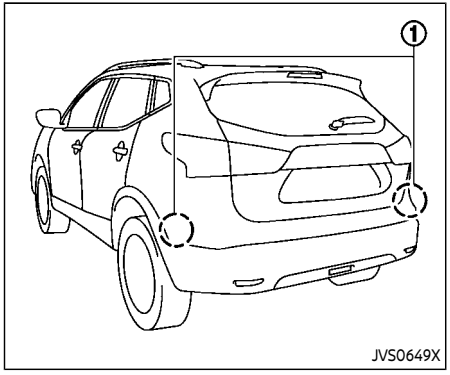

The BSW system uses radar sensors ① installed near the rear bumper to detect other vehicles in an adjacent lane.

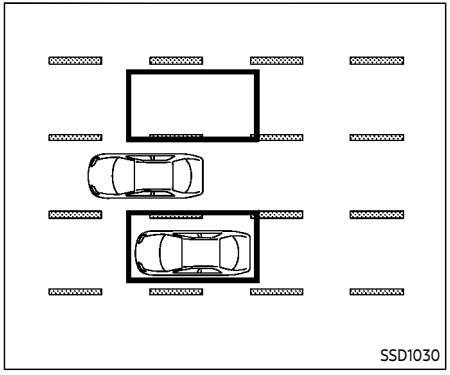

Detection zone

The radar sensors can detect vehicles on either side of your vehicle within the detection zone shown as illustrated. This detection zone starts from the outside mirror of your vehicle and extends approximately 10 ft (3.0 m) behind the rear bumper, and approximately 10 ft (3.0 m) sideways.

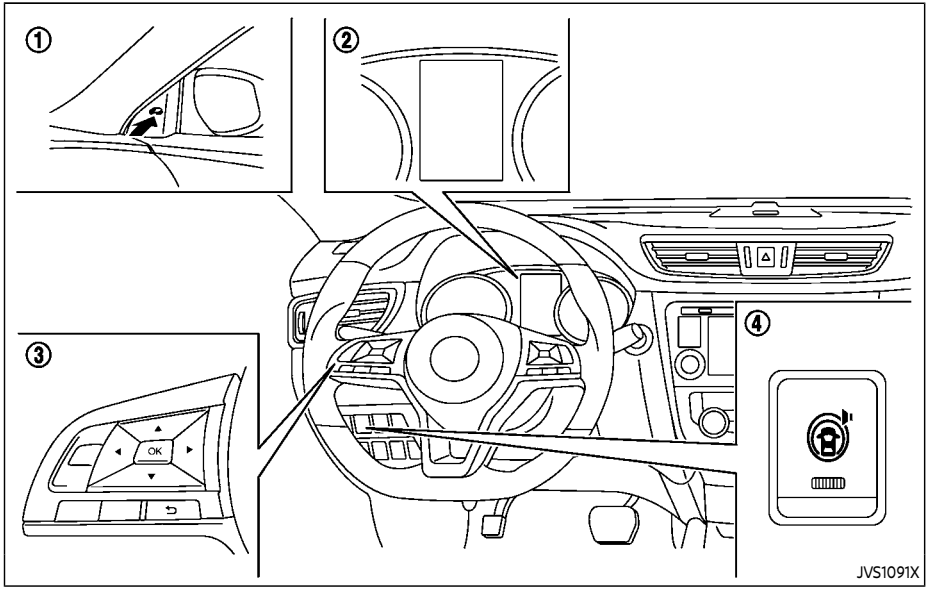

① Side indicator light
② Vehicle information display
③ Steering-wheel-mounted controls (left side)
④ Blind Spot Warning (BSW) switch (if so equipped)

BSW SYSTEM OPERATION

The BSW system operates above approximately 20 MPH (32 km/h).

If the radar sensors detect a vehicle in the detection zone, the side indicator light ① illuminates.

If the turn signal is then activated, the system chimes (twice) and the side indicator light flashes. The side indicator light continues to flash until the detected vehicle leaves the detection zone.

The side indicator light illuminates for a few seconds when the ignition switch is placed in the ON position.

The brightness of the side indicator light is adjusted automatically depending on the brightness of the ambient light.

If a vehicle comes into the detection zone after the driver activates the turn signal, then only the side indicator light flashes and no chime sounds. For additional information, refer to "BSW driving situations" (P.5-47).

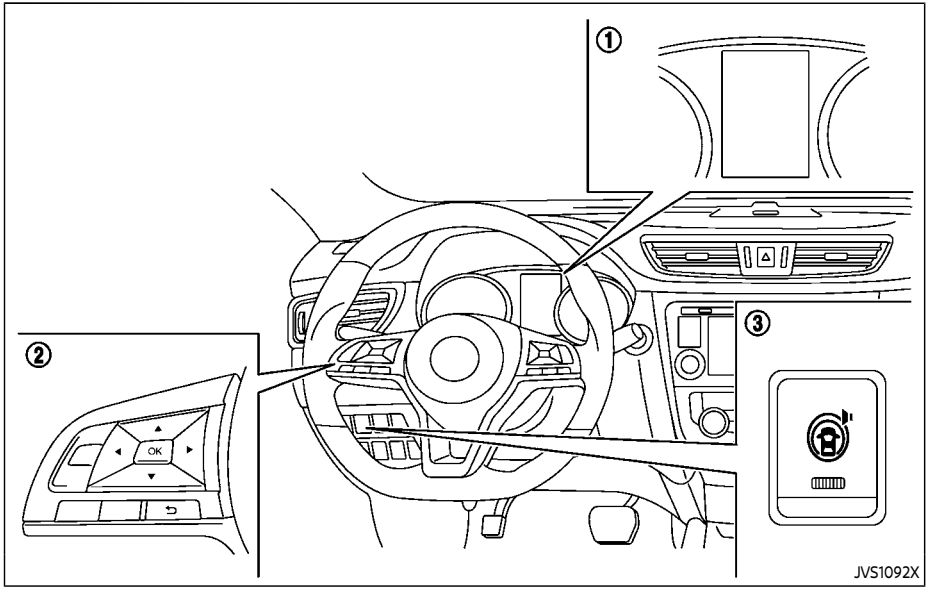

① Vehicle information display

② Steering-wheel-mounted controls (left side)

③ Blind Spot Warning (BSW) switch (if so equipped)

HOW TO ENABLE/DISABLE THE BSW SYSTEM

Perform the following steps to enable or disable the BSW system.

1. Press the ◀ ▶ button until "Settings" displays in the vehicle information display and then press "OK" button. Use the ⬍ button to select "Driver Assistance". Then press the "OK" button.
2. Select "Driving Aids" and press the "OK" button.
3. Use the ⬍ buttons to navigate in the menu and use the "OK" button to select or change an item.
   - Select "Blind Spot" and press the "OK" button.

     Use the "OK" button to check/uncheck the box for "Warning."

For models with BSW switch:

To enable the BSW system, push the Blind Spot Warning (BSW) switch on the instrument panel after starting the engine.

The BSW ON indicator on the vehicle information display will appear. Push the BSW switch again to disable the BSW system. The BSW ON indicator on the vehicle information display will turn off.

NOTE:

The system will retain current settings in the vehicle information display even if the engine is restarted.

BSW SYSTEM LIMITATIONS

WARNING

Listed below are the system limitations for the BSW system. Failure to operate the vehicle in accordance with these system limitations could result in serious injury or death.

- **The BSW system cannot detect all vehicles under all conditions.**
- **The radar sensors may not be able to detect and activate BSW when certain objects are present such as:**
  - **— Pedestrians, bicycles, animals.**
  - **— Vehicles such as motorcycles, low height vehicles, or high ground clearance vehicles.**
  - **— Oncoming vehicles.**
  - **— Vehicles remaining in the detection zone when you accelerate from a stop.**
  - **— A vehicle merging into an adjacent lane at a speed approximately the same as your vehicle.**
  - **— A vehicle approaching rapidly from behind.**
  - **— A vehicle which your vehicle overtakes rapidly.**
  - **— A vehicle that passes through the detection zone quickly.**
  - **— When overtaking several vehicles in a row, the vehicles after the first vehicle may not be detected if they are traveling close together.**
- **The radar sensor's detection zone is designed based on a standard lane width. When driving in a wider lane, the radar sensors may not detect vehicles in an adjacent lane. When driving in a narrow lane, the radar sensors may detect vehicles driving two lanes away.**
- **The radar sensors are designed to ignore most stationary objects, however objects such as guardrails, walls, foliage and parked vehicles may occasionally be detected. This is a normal operation condition.**
- **The following conditions may reduce the ability of the radar to detect other vehicles:**
  - **— Severe weather**
  - **— Road spray**
  - **— Ice/frost/dirt build-up on the vehicle**
- **Do not attach stickers (including transparent material), install accessories or apply additional paint near the radar sensors. These conditions may reduce the ability of the radar to detect other vehicles.**
- **Excessive noise (for example, audio system volume, open vehicle window) will interfere with the chime sound, and it may not be heard.**

BSW DRIVING SITUATIONS

Indicator on

Indicator off

Indicator flashing

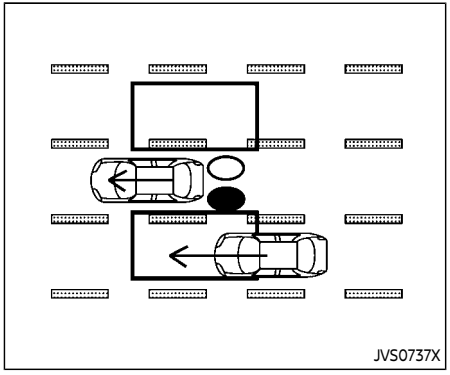

Illustration 1 – Approaching from behind

Another vehicle approaching from behind

Illustration 1: The side indicator light illuminates if a vehicle enters the detection zone from behind in an adjacent lane.

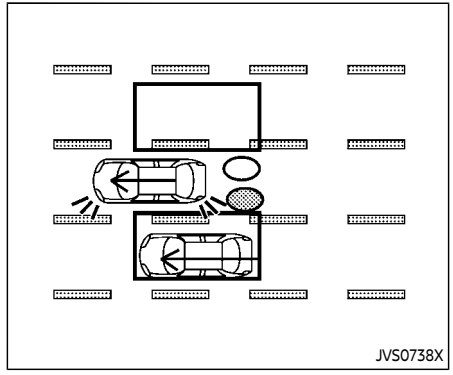

Illustration 2 – Approaching from behind

Illustration 2: If the driver activates the turn signal while another vehicle is in the detection zone, then the system chimes (twice) and the side indicator light flashes.

NOTE:

- **The radar sensors may not detect vehicles which are approaching rapidly from behind.**
- **If the driver activates the turn signal before a vehicle enters the detection zone, the side indicator light will flash but no chime will sound when the other vehicle is detected.**

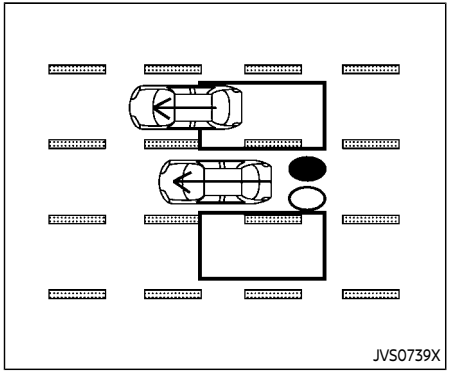

Illustration 3 – Overtaking another vehicle

Overtaking another vehicle

Illustration 3: The side indicator light illuminates if you overtake a vehicle and that vehicle stays in the detection zone for approximately 2 seconds.

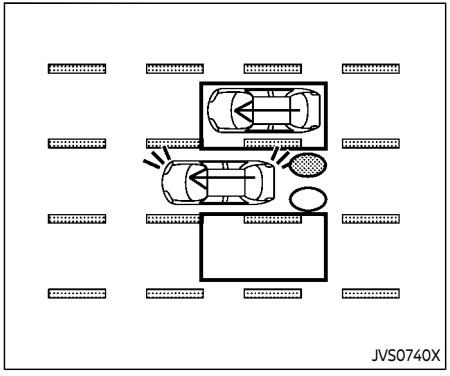

Illustration 4 – Overtaking another vehicle

Illustration 4: If the driver activates the turn signal while another vehicle is in the detection zone, then the system chimes (twice) and the side indicator light flashes.

NOTE:

- **When overtaking several vehicles in a row, the vehicles after the first vehicle may not be detected if they are traveling close together.**
- **The radar sensors may not detect slower moving vehicles if they are passed quickly.**
- **If the driver activates the turn signal before a vehicle enters the detection zone, the side indicator light will flash but no chime will sound when the other vehicle is detected.**

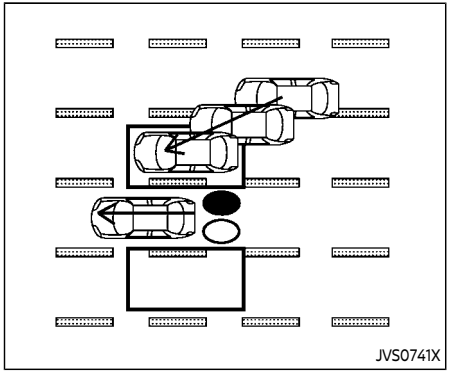

Illustration 5 – Entering from the side

Entering from the side

Illustration 5: The side indicator light illuminates if a vehicle enters the detection zone from either side.

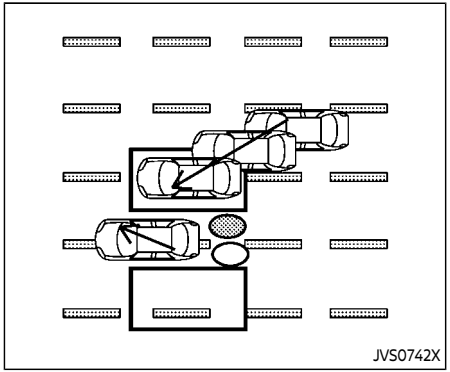

Illustration 6 – Entering from the side

Illustration 6: If the driver activates the turn signal while another vehicle is in the detection zone, then the system chimes (twice) and the side indicator light flashes.

NOTE:

- **The radar sensors may not detect a vehicle which is traveling at about the same speed as your vehicle when it enters the detection zone.**
- **If the driver activates the turn signal before a vehicle enters the detection zone, the side indicator light will flash but no chime will sound when the other vehicle is detected.**

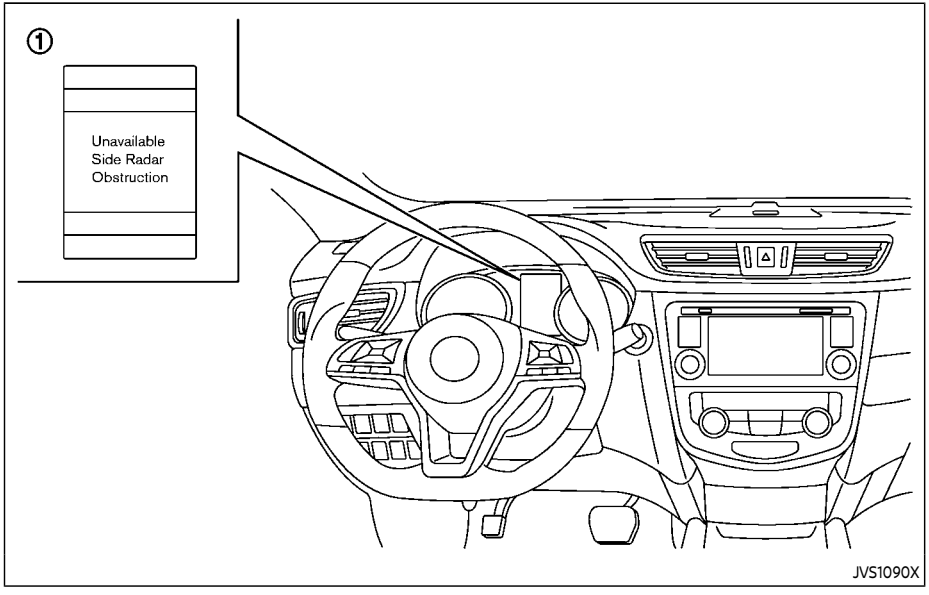

① Vehicle information display

SYSTEM TEMPORARILY UNAVAILABLE

When radar blockage is detected, the BSW system will be turned off automatically, a chime will sound and the "Unavailable: Side Radar Obstruction" warning message will appear in the vehicle information display ①.

The system is not available until the conditions no longer exist.

The radar sensors may be blocked by temporary ambient conditions such as splashing water, mist or fog. The blocked condition may also be caused by objects such as ice, frost or dirt obstructing the radar sensors.

NOTE:

If the BSW system stops working, the RCTA system will also stop working.

Action to take:

When the above conditions no longer exist, the system will resume automatically.

If the "Unavailable: Side Radar Obstruction" warning message continues to appear, have the system checked. It is recommended that you visit a NISSAN dealer for this service.

SYSTEM MALFUNCTION

When the BSW system malfunctions, it will be turned off automatically and the system malfunction warning message will appear in the vehicle information display.

NOTE:

If the BSW system stops working, the RCTA system will also stop working.

Action to take:

Stop the vehicle in a safe location, turn the engine off and restart the engine. If the message continues to appear, have the BSW system checked. It is recommended that you visit a NISSAN dealer for this service.

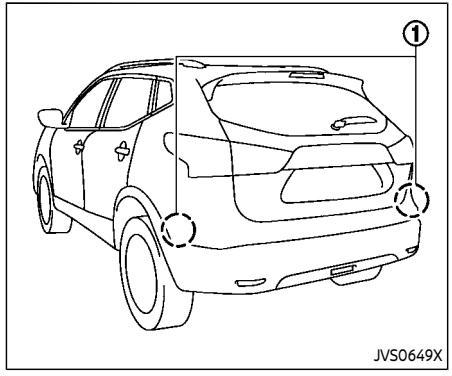

SYSTEM MAINTENANCE

The two radar sensors ① for the BSW system are located near the rear bumper. Always keep the area near the radar sensors clean.

The radar sensors may be blocked by temporary ambient conditions such as splashing water, mist or fog.

The blocked condition may also be caused by objects such as ice, frost or dirt obstructing the radar sensors.

Check for and remove objects obstructing the area around the radar sensors.

Do not attach stickers (including transparent material), install accessories or apply additional paint near the radar sensors.

Do not strike or damage the area around the radar sensors.

See a NISSAN dealer or other authorized repair shop if the area around the radar sensors is damaged due to a collision.

Radio frequency statement

For USA

FCC : OAYSRR3B

This device complies with part 15 of the FCC Rules. Operation is subject to the following two conditions:

(1) This device may not cause harmful interference, and (2) this device must accept any interference received, including interference that may cause undesired operation.

FCC Warning

Changes or modifications not expressly approved by the party responsible for compliance could void the user's authority to operate the equipment

For Canada

Applicable law: Canada 310

This device complies with Industry Canada licence-exempt RSS standard(s). Operation is subject to the following two conditions: (1) this device may not

cause interference, and (2) this device must accept any interference, including interference that may cause undesired operation of the device.

Frequency bands: 24.05 – 24.25GHz

Output power: less than 20 milliwatts

REAR CROSS TRAFFIC ALERT (RCTA) (if so equipped)

WARNING

Failure to follow the warnings and instructions for proper use of the RCTA system could result in serious injury or death.

- **The RCTA system is not a replacement for proper driving procedures and is not designed to prevent contact with vehicles or objects. When backing out of a parking space, always use the side and rear mirrors and turn and look in the direction your vehicle will move. Never rely solely on the RCTA system.**

The RCTA system will assist you when backing out from a parking space. When the vehicle is in reverse, the system is designed to detect other vehicles approaching from the right or left of the vehicle. If the system detects cross traffic, it will alert you.

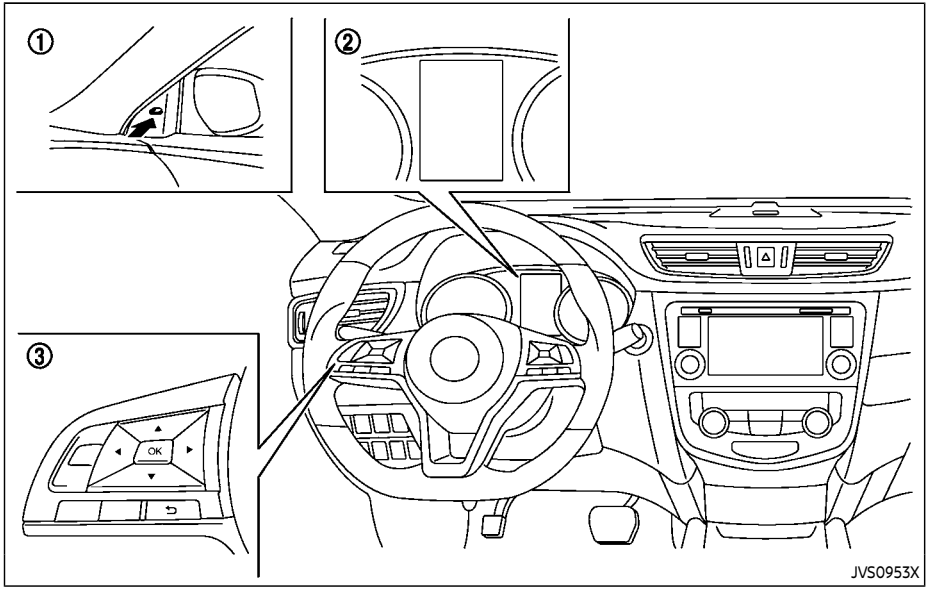

① Side indicator light
② Vehicle information display
③ Steering-wheel-mounted controls (left side)

RCTA SYSTEM OPERATION

The RCTA system can help alert the driver of an approaching vehicle when the driver is backing out of a parking space.

When the shift position is in R (Reverse) and the vehicle speed is less than approximately 5 MPH (8 km/h), the RCTA system is operational.

If the radar detects an approaching vehicle from either side, the system chimes (once) and the side indicator light flashes on the side the vehicle is approaching from.

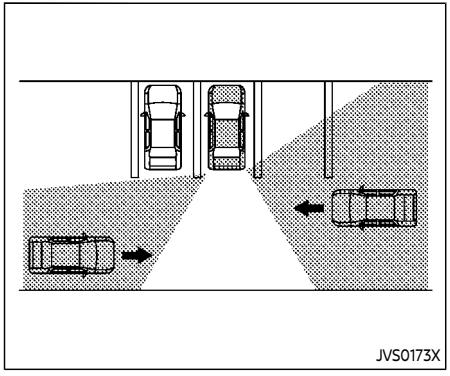

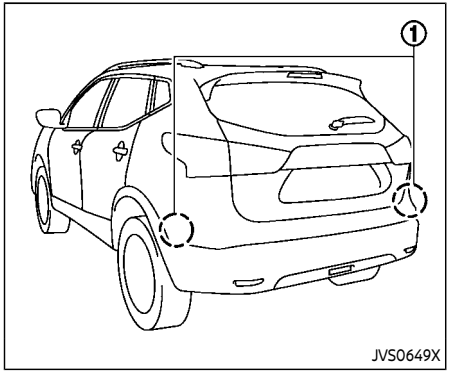

The RCTA system uses radar sensors ① installed on both sides near the rear bumper to detect an approaching vehicle.

The radar sensors ① can detect an approaching vehicle from up to approximately 66 ft (20 m) away.

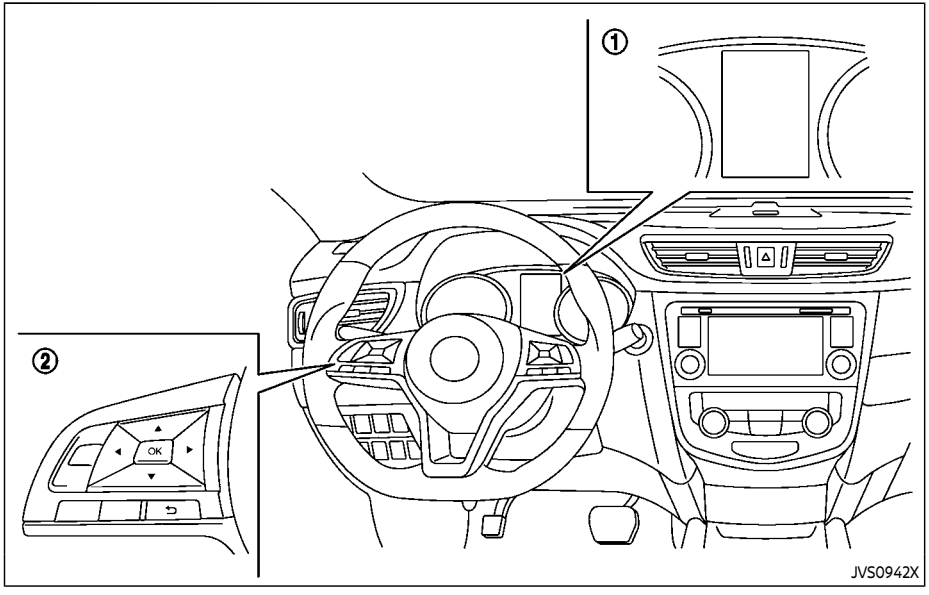

① Vehicle information display

② Steering-wheel-mounted controls (left side)

HOW TO ENABLE/DISABLE THE RCTA SYSTEM

Perform the following steps to enable or disable the RCTA system.

1. Press the ◀ ▶ button until "Settings" displays in the vehicle information display and then press "OK" button. Use the ⬍ button to select "Driver Assistance" Then press the "OK" button.
2. Use the button to select "Parking Aids" then press the OK button.
3. Select "Cross Traffic" and press the "OK" button.
4. Use the "OK" button to enable or disable the system.

NOTE:

The system setting will be retained even if the engine is restarted.

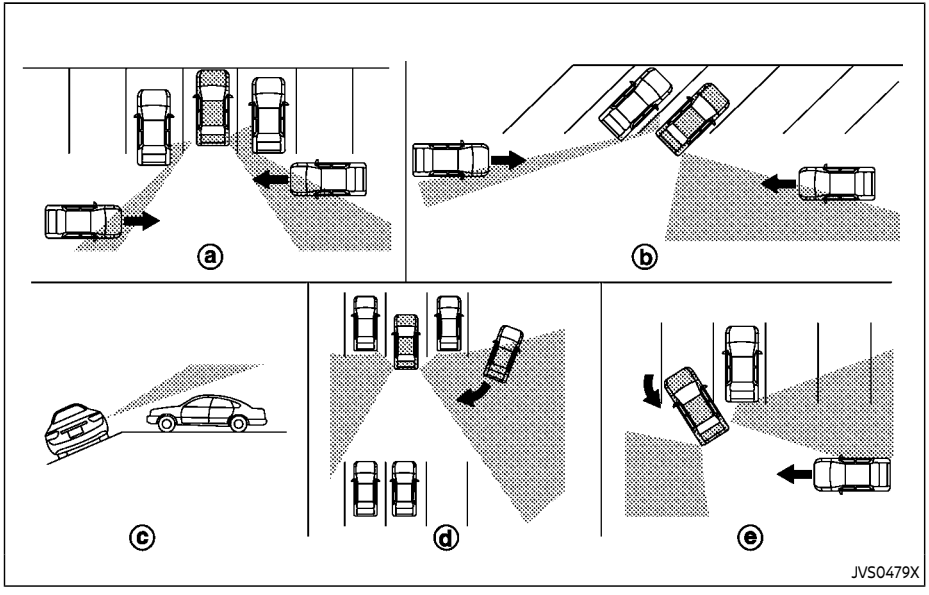

RCTA SYSTEM LIMITATIONS

WARNING

Listed below are the system limitations for the RCTA system. Failure to operate the vehicle in accordance with these system limitations could result in serious injury or death.

- **Always check surroundings and turn to check what is behind you before backing up. The radar sensors detect approaching (moving) vehicles. The radar sensors cannot detect every object such as:**
  - **Pedestrians, bicycles, motorcycles, animals or child-operated toy vehicles**
  - **A vehicle that is passing at speeds greater than approximately 19 MPH (30 km/h)**
  - **A vehicle that is passing at speeds lower than approximately 5 MPH (8 km/h)**
- **The radar sensors may not detect approaching vehicles in certain situations:**
  - **Illustration ⓐ: When a vehicle parked next to you obstructs the beam of the radar sensor.**
  - **Illustration ⓑ: When the vehicle is parked in an angled parking space.**
  - **Illustration ⓒ: When the vehicle is parked on inclined ground.**
  - **Illustration ⓓ: When an approaching vehicle turns into your vehicle's parking lot aisle.**

— Illustration ⓔ: When the angle formed by your vehicle and approaching vehicle is small

- The following conditions may reduce the ability of the radar to detect other vehicles:
  — Severe weather
  — Road spray
  — Ice/frost/dirt build-up on the vehicle
- Do not attach stickers (including transparent material), install accessories or apply additional paint near the radar sensors. These conditions may reduce the ability of the radar to detect other vehicles
- Excessive noise (e.g. audio system volume, open vehicle window) will interfere with the chime sound, and it may not be heard.

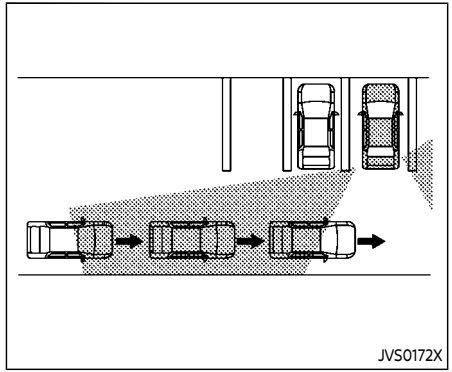

Illustration 1

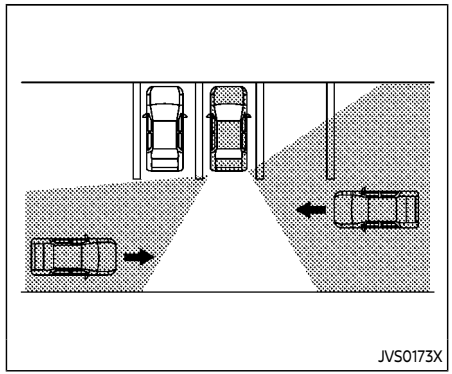

Illustration 2

NOTE:

In the case of several vehicles approaching in a row (Illustration 1) or in the opposite direction (Illustration 2), a chime may not be sounded by the RCTA system after the first vehicle passes the sensors.

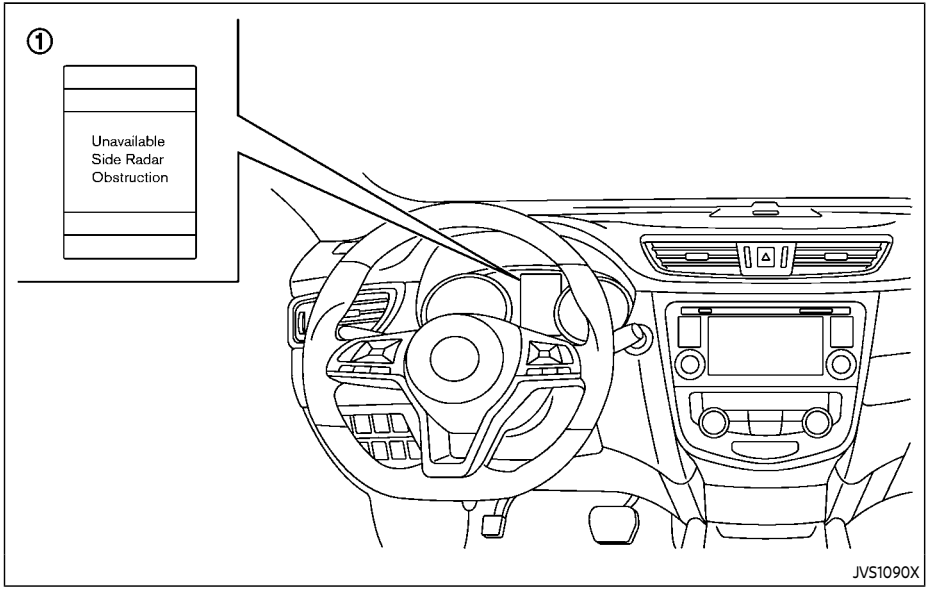

① Vehicle information display

SYSTEM TEMPORARILY UNAVAILABLE

When radar blockage is detected, the system will be deactivated automatically. The "Unavailable: Side Radar Obstruction" warning message will appear in the vehicle information display.

The systems are not available until the conditions no longer exist.

The radar sensors may be blocked by temporary ambient conditions such as splashing water, mist or fog.

The blocked condition may also be caused by objects such as ice, frost or dirt obstructing the radar sensors.

NOTE:

If the BSW system stops working, the RCTA system will also stop working.

Action to take:

When the above conditions no longer exist, the system will resume automatically.

SYSTEM MALFUNCTION

When the RCTA system malfunctions, it will turn off automatically. The system malfunction warning message will appear in the vehicle information display.

NOTE:

If the BSW system stops working, the RCTA system will also stop working.

Action to take:

Stop the vehicle in a safe location, turn the engine off and restart the engine. If the message continues to appear, have the system checked. It is recommended that you visit a NISSAN dealer for this service.

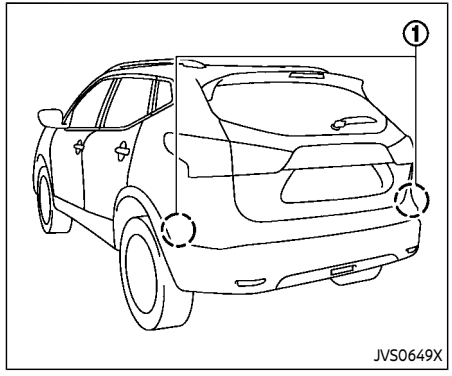

SYSTEM MAINTENANCE

The two radar sensors ① for the RCTA system are located near the rear bumper. Always keep the area near the radar sensors clean.

The radar sensors may be blocked by temporary ambient conditions such as splashing water, mist or fog.

The blocked condition may also be caused by objects such as ice, frost or dirt obstructing the radar sensors.

Check for and remove objects obstructing the area around the radar sensors.

Do not attach stickers (including transparent material), install accessories or apply additional paint near the radar sensors.

Do not strike or damage the area around the radar sensors. It is recommended that you visit a NISSAN dealer if the area around the radar sensors is damaged due to a collision.

Radio frequency statement

For USA

FCC : OAYSRR3B

This device complies with part 15 of the FCC Rules. Operation is subject to the following two conditions:

(1) This device may not cause harmful interference, and (2) this device must accept any interference received, including interference that may cause undesired operation.

FCC Warning

Changes or modifications not expressly approved by the party responsible for compliance could void the user's authority to operate the equipment

For Canada

Applicable law: Canada 310

This device complies with Industry Canada licence-exempt RSS standard(s). Operation is subject to the following two conditions: (1) this device may not cause interference, and (2) this device

must accept any interference, including interference that may cause undesired operation of the device.

Frequency bands: 24.05 – 24.25GHz

Output power: less than 20 milliwatts

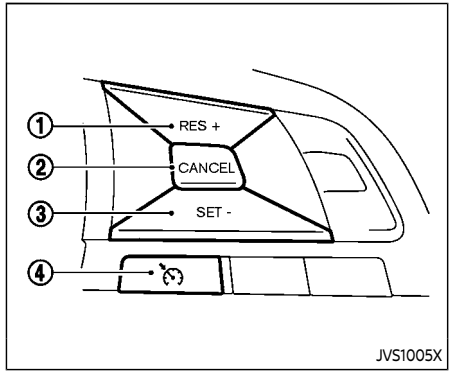

1. RES/+ switch
2. CANCEL switch
3. SET/- switch
4. Cruise ON/OFF switch

WARNING

- **Always observe the posted speed limits and do not set the speed over them.**
- **Do not use the cruise control when driving under the following conditions. Doing so could cause a loss of vehicle control and result in an accident.**
  - **When it is not possible to keep the vehicle at a constant speed**
  - **When driving in heavy traffic**
  - **When driving in traffic that varies speed**
  - **When driving in windy areas**
  - **When driving on winding or hilly roads**
  - **When driving on slippery (rain, snow, ice, etc.) roads**

CAUTION

On Manual Transmission (MT) model, do not shift to the N (Neutral) position without depressing the clutch pedal when the cruise control is operated. Should this occur, depress the clutch pedal and turn the Cruise ON/OFF switch off immediately. Failure to do so may cause engine damage.

PRECAUTIONS ON CRUISE CONTROL

- If the cruise control system malfunctions, it will cancel automatically. The CRUISE indicator in the vehicle information display will then blink to warn the driver.
- If the CRUISE indicator blinks, turn the Cruise ON/OFF switch off and have the system checked. It is recommended that you visit a NISSAN dealer for this service.
- The CRUISE indicator may blink when the Cruise ON/OFF switch is turned ON while pushing the RES/+, SET/-, or CANCEL switch. To properly set the cruise control system, perform the following procedures.

CRUISE CONTROL OPERATIONS

The cruise control allows driving at speeds above 25 MPH (40 km/h) without keeping your foot on the accelerator pedal.

The cruise control will automatically be canceled if the vehicle slows down more than approximately 8 MPH (13 km/h) below the set speed.

Moving the shift lever to the N (Neutral) position will cancel the cruise control.

Turning on cruise control

Push the Cruise ON/OFF switch. The CRUISE indicator in the vehicle information display will appear.

Setting cruising speed

1. Accelerate to the desired speed.
2. Push the SET/- switch and release it.
3. Take your foot off the accelerator pedal.

The vehicle will maintain the set speed.

Passing another vehicle:

Depress the accelerator pedal to accelerate. After releasing the accelerator pedal, the vehicle will return to the previously set speed.

The vehicle may not maintain the set speed when going up or down steep hills. In such cases, drive without the cruise control.

Resetting to slower speed:

Use any one of the following methods to reset to a slower speed.

- Lightly tap the foot brake pedal. When the vehicle reaches the desired speed, push and release the SET/- switch.
- Push and hold the SET/- switch. When the vehicle reaches the desired speed, release the SET- switch.
- Quickly push and release the SET/- switch. This will reduce the vehicle speed by about 1 MPH (1.6 km/h).

Resetting to faster speed:

Use any one of the following methods to reset to a faster speed.

- Depress the accelerator pedal. When the vehicle reaches the desired speed, push and release the SET/- switch.
- Push and hold the RES/+switch. When the vehicle reaches the desired speed, release the RES/+ switch.
- Quickly push and release the RES/+ switch. This will increase the vehicle speed by about 1 MPH (1.6 km/h).

Resuming at preset speed:

Push and release the RES/+ switch.

The vehicle will resume the last set cruising speed when the vehicle speed is over 25 MPH (40 km/h).

Cancelling cruising speed

Use any one of the following methods to cancel the set speed.

- Push the CANCEL switch.
- Tap the foot brake pedal.
- Push the Cruise ON/OFF switch. The CRUISE indicator will turn off.

WARNING

Failure to follow the warnings and instructions for proper use of the ICC system could result in serious injury or death.

- **ICC is not a collision avoidance or warning device. For highway use only and it is not intended for congested areas or city driving. Failure to apply the brakes could result in an accident.**
- **The ICC system is only an aid to assist the driver. It is the driver's responsibility to stay alert, drive safely, and be in control of the vehicle at all times.**
- **Always observe posted speed limits and do not set the speed over them.**
- **Always drive carefully and attentively when using either cruise control mode. Read and understand the Owner's Manual thoroughly before using the cruise control. To avoid serious injury or death, do not rely on the system to prevent accidents or to control the vehicle's speed in emergency situations. Do not use cruise control except in appropriate road and traffic conditions.**
- **In the conventional (fixed speed) cruise control mode, a warning chime will not sound to warn you if you are too close to the vehicle ahead. Pay special attention to the distance between your vehicle and the vehicle ahead of you or a collision could occur.**

The ICC system maintains a selected distance from the vehicle in front of you within the speed range of 0 to 90 MPH (0 to 144 km/h) up to the set speed.

The set speed can be selected by the driver between 20 to 90 MPH (32 to 144 km/h).

The vehicle travels at a set speed when the road ahead is clear.

The ICC system can be set to one of two cruise control modes.

- Vehicle-to-vehicle distance control mode:
  For maintaining a selected distance between your vehicle and the vehicle in front of you up to the preset speed.
- Conventional (fixed speed) cruise control mode:
  For cruising at a preset speed.

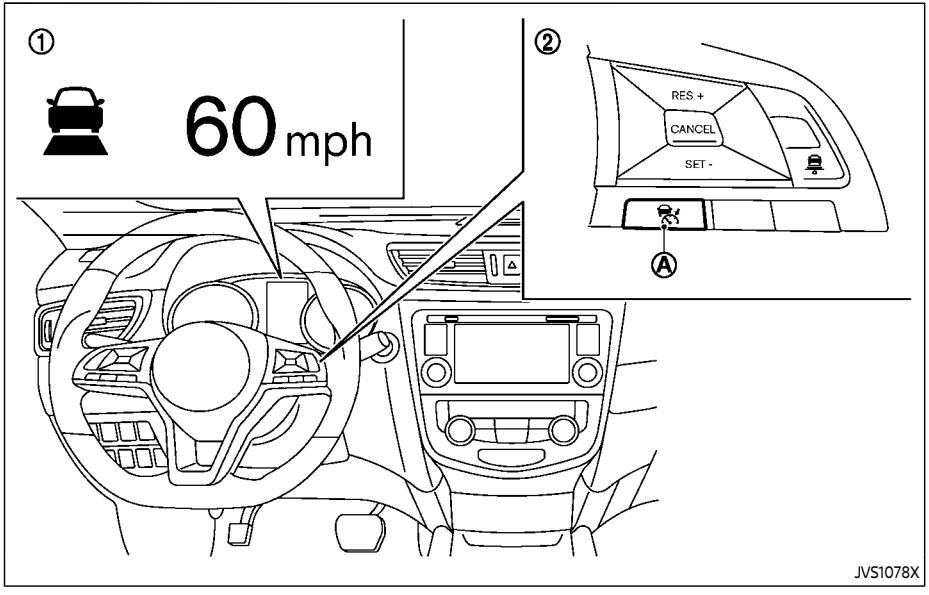

① Displays and indicators
② ICC switches
Ⓐ Cruise ON/OFF switch

Push the Cruise ON/OFF switch Ⓐ to choose the cruise control mode between the vehicle-to-vehicle distance control mode and the conventional (fixed speed) cruise control mode.

Once a control mode is activated, it cannot be changed to the other cruise control mode. To change the mode, push the Cruise ON/OFF switch Ⓐ once to turn the system off. Then push the Cruise ON/OFF switch Ⓐ again to turn the system back on and select the desired cruise control mode.

Always confirm the setting in the ICC system display.

For the vehicle-to-vehicle distance control mode, see "Vehicle-to-vehicle distance control mode" (P.5-64).

For the conventional (fixed speed) cruise control mode, see "Conventional (fixed speed) cruise control mode" (P.5-78).

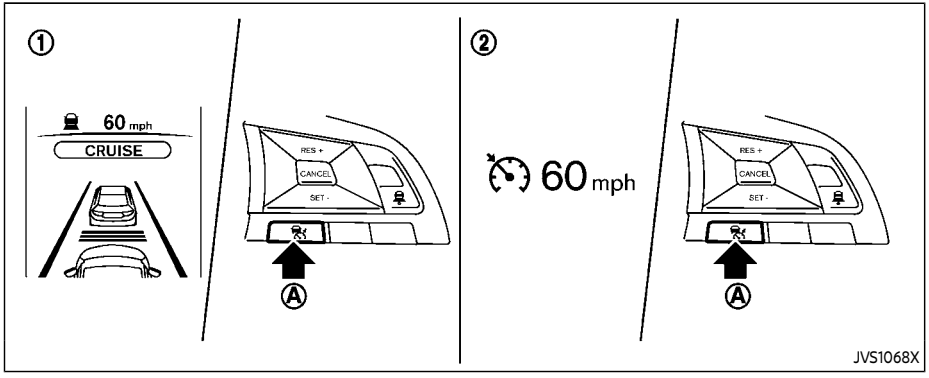

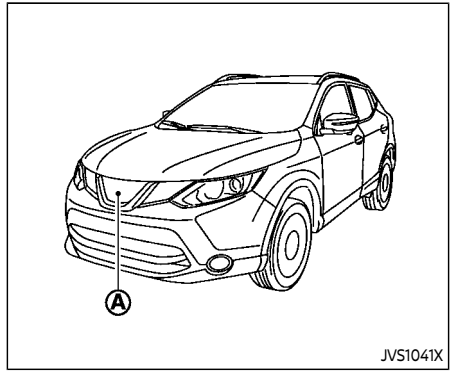

HOW TO SELECT THE CRUISE CONTROL MODE

Selecting the vehicle-to-vehicle distance control mode

To choose the vehicle-to-vehicle distance control mode ①, quickly push and release the Cruise ON/OFF switch Ⓐ.

Selecting the conventional (fixed speed) cruise control mode

To choose the conventional (fixed speed) cruise control mode ②, push and hold the Cruise ON/OFF switch Ⓐ for longer than approximately 1.5 seconds. See "Conventional (fixed speed) cruise control mode" (P.5-78).

VEHICLE-TO-VEHICLE DISTANCE CONTROL MODE

In the vehicle-to-vehicle distance control mode, the ICC system automatically maintains a selected distance from the vehicle traveling in front of you according to that vehicle's speed (up to the set speed), or at the set speed when the road ahead is clear.

The system is intended to enhance the operation of the vehicle when following a vehicle traveling in the same lane and direction.

If the radar sensor Ⓐ detects a slower moving vehicle ahead, the system will reduce the vehicle speed so that your vehicle follows the vehicle in front at the selected distance.

The system automatically controls the throttle and applies the brakes (up to approximately 40% of vehicle braking power) if necessary.

The detection range of the sensor is approximately 650 ft (200 m) ahead.

Vehicle-to-vehicle distance control mode operation

The vehicle-to-vehicle distance control mode is designed to maintain a selected distance and reduce the speed to match the slower vehicle ahead. The system will decelerate the vehicle as necessary and if the vehicle ahead comes to a stop, the vehicle decelerates to a standstill. However, the ICC system can only apply up to approximately 40% of the vehicle's total braking power. This system should only be used when traffic conditions allow vehicle speeds to remain fairly constant or when vehicle speeds change gradually. If a vehicle moves into the traveling lane ahead or if a vehicle traveling ahead rapidly decelerates, the distance between vehicles may become closer because the ICC system cannot decelerate the vehicle quickly enough. If this occurs, the ICC system will sound a warning chime and blink the system display to notify the driver to take necessary action.

The system will cancel and a warning chime will sound if the speed is below approximately 15 MPH (24 km/h) and a vehicle is not detected ahead. The system will also disengage when the vehicle goes above the maximum set speed.

See "Approach warning" (P.5-71).

The following items are controlled in the vehicle-to-vehicle distance control mode:

- When there are no vehicles traveling ahead, the vehicle-to-vehicle distance control mode maintains the speed set by the driver. The set speed range is the following speed.
  — 20 and 90 MPH (32 and 144 km/h)
- When there is a vehicle traveling ahead, the vehicle-to-vehicle distance control mode adjusts the speed to maintain the distance, selected by driver, from the vehicle ahead. The adjusting speed range is up to the set speed. If the vehicle ahead comes to a stop, the vehicle decelerates to a standstill within the limitations of the system. The system will cancel once it judges a standstill with a warning chime.
- When the vehicle traveling ahead has moved out from its lane of travel, the vehicle-to-vehicle distance control mode accelerates and maintains vehicle speed up to the set speed.

The ICC system does not control vehicle speed or warn you when you approach stationary and slow moving vehicles. You must pay attention to vehicle operation to maintain proper distance from vehicles ahead when approaching toll gates or traffic congestion.

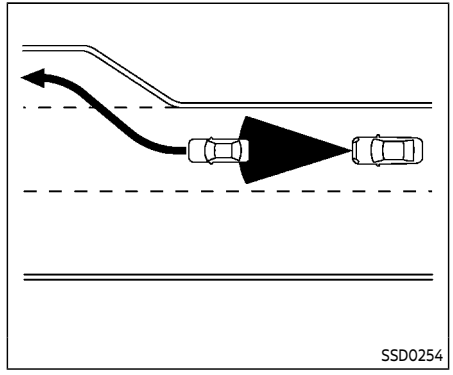

When driving on the freeway at a set speed and approaching a slower traveling vehicle ahead, the ICC system will adjust the speed to maintain the distance, selected by the driver, from the vehicle ahead. If the vehicle ahead changes lanes or exits the freeway, the ICC system will accelerate and maintain the speed up to the set speed. Pay attention to the driving operation to maintain control of the vehicle as it accelerates to the set speed.

The vehicle may not maintain the set speed on winding or hilly roads. If this occurs, you will have to manually control the vehicle speed.

Normally when controlling the distance to

a vehicle ahead, this system automatically accelerates or decelerates your vehicle according to the speed of the vehicle ahead. Depress the accelerator to properly accelerate your vehicle when acceleration is required for a lane change. Depress the brake pedal when deceleration is required to maintain a safe distance to the vehicle ahead due to its sudden braking or if a vehicle cuts in. Always stay alert when using the ICC system.

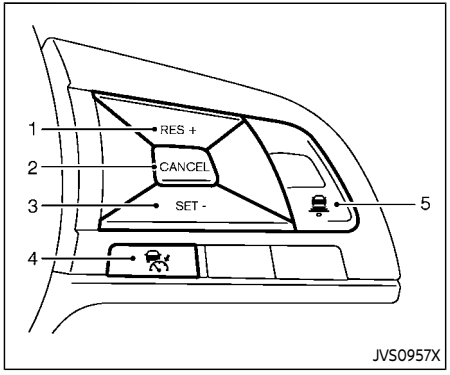

Vehicle-to-vehicle distance control mode switches

The system is operated by a CRUISE ON/OFF switch and four control switches, all mounted on the steering wheel.

1. RES/+ switch:

   Resumes set speed or increases speed incrementally.
2. CANCEL switch:

   Deactivates the system without erasing the set speed.
3. SET/- switch:

   Sets desired cruise speed, reduces speed incrementally.
4. CRUISE ON/OFF switch:

   Master switch to activate the system
5. DISTANCE switch:

   Changes the vehicle's following distance:
   - Long
   - Middle
   - Short

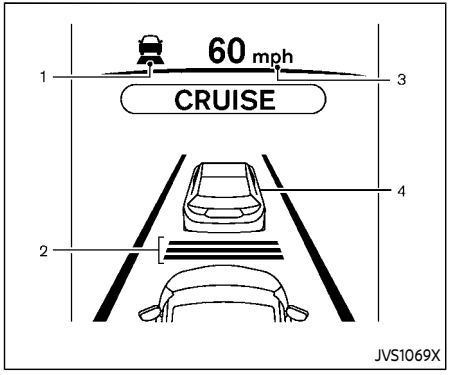

Vehicle-to-vehicle distance control mode display and indicators

The display is located between the speedometer and tachometer.

1. This indicator indicates the ICC system status depending on a color.
   - ICC system ON indicator (gray):
     Indicates that the Cruise ON/OFF switch is ON.
   - ICC system set indicator (green):
     Indicates that cruising speed is set
   - ICC system warning (yellow):
     Indicates that there is a malfunction in the ICC system.
2. Set distance indicator:
   Displays the selected distance between vehicles set with the DISTANCE switch.
3. Set vehicle speed indicator:
   Indicates the set vehicle speed.
4. Vehicle ahead detection indicator:
   Indicates whether it detects a vehicle in front of you.

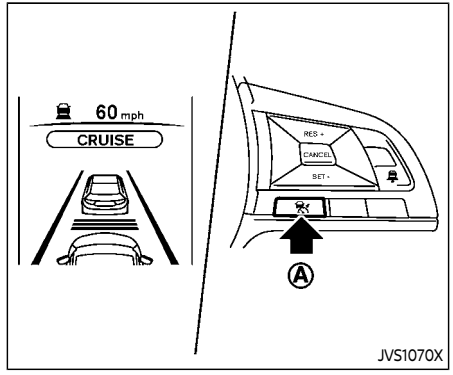

Operating vehicle-to-vehicle distance control mode

To turn on the cruise control, quickly push and release the CRUISE ON/OFF switch Ⓐ. The ICC system ON indicator (grey), set distance indicator and set vehicle speed indicator come on and in a standby state for setting.

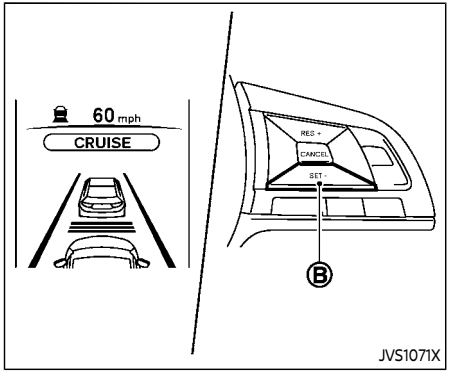

To set cruising speed, accelerate your vehicle to the desired speed, push the SET/- switch Ⓑ and release it. (The ICC system set indicator (green), vehicle ahead detection indicator, set distance indicator and set vehicle speed indicator come on.) Take your foot off the accelerator pedal. Your vehicle will maintain the set speed.

When the SET/- switch Ⓑ is pushed under the following conditions, the system cannot be set and the ICC indicators will blink for approximately 2 seconds:

- When traveling below 20 MPH (32 km/h) and the vehicle ahead is not detected
- When the shift lever is not in the D (Drive) or manual shift mode
- When the parking brake is applied
- When the brakes are operated by the driver

When the SET/- switch Ⓑ is pushed under the following conditions, the system cannot be set.

A warning chime will sound and a message will pop up:

- When the VDC system is off (To use the ICC system, turn on the VDC system. Push the CRUISE ON/OFF switch to turn off the ICC system and reset the ICC system by pushing the CRUISE ON/OFF switch again.)

  For additional information about the VDC system, see "Vehicle Dynamic Control (VDC) system" (P.5-108).
- When ABS or VDC (including the traction control system) is operating
- When a wheel is slipping (To use the ICC system, make sure the wheels are no longer slipping.)

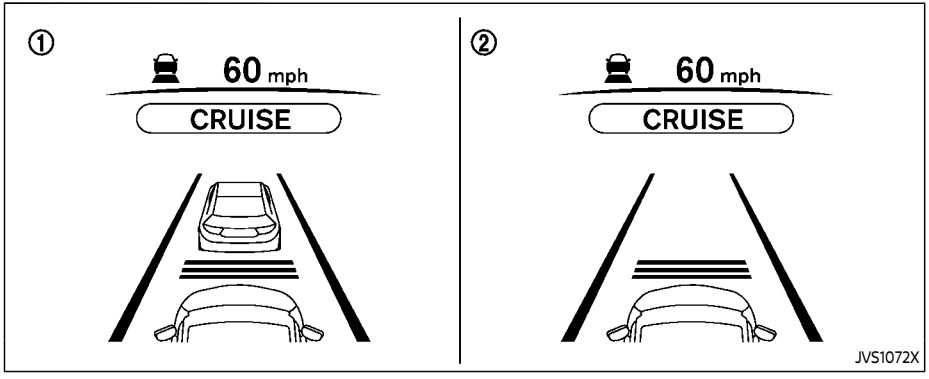

① System set display with vehicle ahead
② System set display without vehicle ahead

The driver sets the desired vehicle speed based on the road conditions. The ICC system maintains the set vehicle speed, similar to standard cruise control, as long as no vehicle is detected in the lane ahead.

The ICC system displays the set speed.

Vehicle detected ahead:

When a vehicle is detected in the lane ahead, the ICC system decelerates the vehicle by controlling the throttle and applying the brakes to match the speed of a slower vehicle ahead. The system then controls the vehicle speed based on the speed of the vehicle ahead to maintain the driver selected distance.

NOTE:

- **The stop lights of the vehicle come on when braking is performed by the ICC system.**
- **When the brake operates, a noise may be heard. This is not a malfunction.**

When a vehicle ahead is detected, the vehicle ahead detection indicator comes on. The ICC system will also display the set speed and selected distance.

Vehicle ahead not detected:

When a vehicle is no longer detected ahead, the ICC system gradually accelerates your vehicle to resume the previously set vehicle speed. The ICC system then maintains the set speed.

When a vehicle is no longer detected the vehicle ahead detection indicator turns off.

If a vehicle ahead appears during acceleration to the set vehicle speed or any time the ICC system is in operation, the system controls the distance to that vehicle.

When a vehicle is no longer detected under approximately 15 MPH (24 km/h), the system will be canceled.

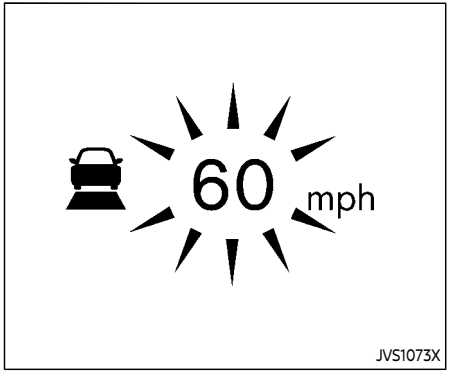

When passing another vehicle, the set speed indicator Ⓑ will flash when the vehicle speed exceeds the set speed. The vehicle detect indicator will turn off when the area ahead of the vehicle is open. When the pedal is released, the vehicle will return to the previously set speed.

Even though your vehicle speed is set in the ICC system, you can depress the accelerator pedal when it is necessary to accelerate your vehicle rapidly.

How to change the set vehicle speed

To cancel the preset speed, use any of these methods:

- Push the CANCEL switch. The set vehicle speed indicator will go out.
- Tap the brake pedal. The set vehicle speed indicator will go out.
- Turn the CRUISE ON/OFF switch off. The ICC indicators will go out.

To reset at a faster cruising speed, use one of the following methods:

- Depress the accelerator pedal. When the vehicle attains the desired speed, push and release the SET/- switch.
- Push and hold the RES/+ switch. The set vehicle speed will increase by approximately 5 MPH (5 km/h).
- Push, then quickly release the RES/+ switch. Each time you do this, the set speed will increase by approximately 1 MPH (1 km/h).

To reset at a slower cruising speed, use one of the following methods:

- Lightly tap the brake pedal. When the vehicle attains the desired speed, push the SET/- switch and release it.
- Push and hold the SET/- switch. The set vehicle speed will decrease by approximately 5 MPH (5 km/h).
- Push, then quickly release the SET/- switch. Each time you do this, the set speed will decrease by approximately 1 MPH (1 km/h).

To resume the preset speed, push and release the RES/+ switch. The vehicle will resume the last set cruising speed when the vehicle speed is over 20 MPH (32 km/h).

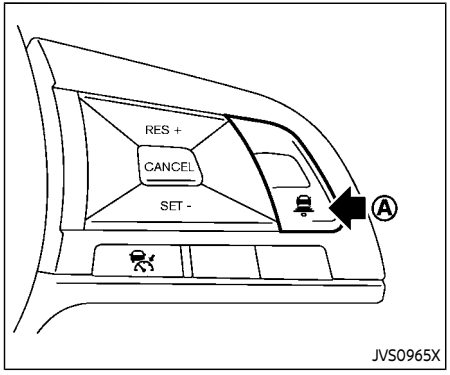

How to change the set distance to the vehicle ahead

The distance to the vehicle ahead can be selected at any time depending on the traffic conditions.

Each time the DISTANCE switch Ⓐ is pushed, the set distance will change to long, middle, short and back to long again in that sequence.

Distance	Display	Approximate distance at 60 MPH (100 km/h) [ft (m)]
Long		200 (60)
Middle		150 (45)
Short		100 (30)

JVS1093X

- The distance to the vehicle ahead will change according to the vehicle speed. The higher the vehicle speed, the longer the distance.
- If the engine is stopped, the set distance becomes “long”. (Each time the engine is started, the initial setting becomes “long”.)

Approach warning

If your vehicle comes closer to the vehicle ahead due to rapid deceleration of that vehicle or if another vehicle cuts in, the system warns the driver with the chime and ICC system display. Decelerate by depressing the brake pedal to maintain a

safe vehicle distance if:

- The chime sounds.
- The vehicle ahead detection indicator blinks.

The warning chime may not sound in some cases when there is a short distance between vehicles. Some examples are:

- When the vehicles are traveling at the same speed and the distance between vehicles is not changing
- When the vehicle ahead is traveling faster and the distance between vehicles is increasing
- When a vehicle cuts in near your vehicle

The warning chime will not sound when:

- Your vehicle approaches other vehicles that are parked or moving slowly.
- The accelerator pedal is depressed, overriding the system.

NOTE:

The approach warning chime may sound and the system display may blink when the radar sensor detects objects on the side of the vehicle or on the side of the road. This may cause the ICC system to decelerate or accelerate the vehicle. The radar sensor may detect these objects when the vehicle is driven on winding roads, narrow roads, hilly roads or when entering or exiting a curve. In these cases you will have to manually control the proper distance ahead of your vehicle.

Also, the sensor sensitivity can be affected by vehicle operation (steering maneuver or driving position in the lane) or traffic or vehicle condition (for example, if a vehicle is being driven with some damage).

Automatic cancellation

A chime sounds under the following conditions and the control is automatically canceled.

- When the vehicle ahead is not detected and your vehicle is traveling below the speed of 15 MPH (24 km/h)
- When the system judges the vehicle is at standstill
- When the shift lever is not in the D (Drive) position or manual shift mode
- When the parking brake is applied
- When the VDC system is turned off
- When VDC (including the traction control system) operates
- When distance measurement becomes impaired due to adhesion of dirt or obstruction to the sensor
- When a wheel slips
- When the radar signal is temporarily interrupted

Vehicle-to-vehicle distance control mode limitations

WARNING

Listed below are the system limitations for the ICC system. Failure to operate the vehicle in accordance with these system limitations could result in serious injury or death.

- **The system is primarily intended for use on straight, dry, open roads with light traffic. It is not advisable to use the system in city traffic or congested areas.**
- **This system will not adapt automatically to road conditions. This system should be used in evenly flowing traffic. Do not use the system on roads with sharp curves, or on icy roads, in heavy rain or in fog.**
- **As there is a performance limit to the distance control function, never rely solely on the ICC system. This system does not correct careless, inattentive or absent-minded driving, or overcome**

poor visibility in rain, fog, or other bad weather. Decelerate the vehicle speed by depressing the brake pedal, depending on the distance to the vehicle ahead and the surrounding circumstances in order to maintain a safe distance between vehicles.

- **If the vehicle ahead comes to a stop, the vehicle decelerates to a standstill within the limitations of the system. The system will cancel once it judges that the vehicle has come to a standstill and sound a warning chime. To prevent the vehicle from moving, the driver must depress the brake pedal.**
- **Always pay attention to the operation of the vehicle and be ready to manually control the proper following distance. The vehicle-to-vehicle distance control mode of the ICC system may not be able to maintain the selected distance between vehicles (following distance) or selected vehicle speed under some circumstances.**
- **The system may not detect the vehicle in front of you in certain road or weather conditions. To avoid accidents, never use the ICC system under the following conditions:**
  - **On roads where the traffic is heavy or there are sharp curves**
  - **On slippery road surfaces such as on ice or snow, etc.**
  - **During bad weather (rain, fog, snow, etc.)**
  - **When rain, snow or dirt adhere to the system sensor**
  - **On steep downhill roads (the vehicle may go beyond the set vehicle speed and frequent braking may result in overheating the brakes)**
  - **On repeated uphill and downhill roads**
  - **When traffic conditions make it difficult to keep a proper distance between vehicles because of frequent acceleration or deceleration**
  - **Interference by other radar sources.**
- **In some road or traffic conditions, a vehicle or object can unexpectedly come into the sensor detection zone and cause automatic braking. You may need to control the distance from other vehicles using the accelerator pedal. Always stay alert and avoid using the ICC system when it is not recommended in this section.**

The radar sensor will not detect the following objects:

- Stationary and slow moving vehicles
- Pedestrians or objects in the roadway
- Oncoming vehicles in the same lane
- Motorcycles traveling offset in the travel lane

The sensor generally detects the signals returned from the vehicle ahead. Therefore, if the sensor cannot detect the reflection from the vehicle ahead, the ICC system may not maintain the selected distance.

The following are some conditions in which the sensor cannot detect the signals:

- When the snow or road spray from traveling vehicles reduces the sensor's visibility
- When excessively heavy baggage is loaded in the rear seat or the cargo area of your vehicle

The ICC system is designed to automati-

cally check the sensor's operation within the limitation of the system. When the sensor is covered with dirt or is obstructed, the system will automatically be canceled. If the sensor is covered with ice, a transparent or translucent vinyl bag, etc., the ICC system may not detect them. In these instances, the vehicle-to-vehicle distance control mode may not cancel and may not be able to maintain the selected following distance from the vehicle ahead. Be sure to check and clean the sensor regularly.

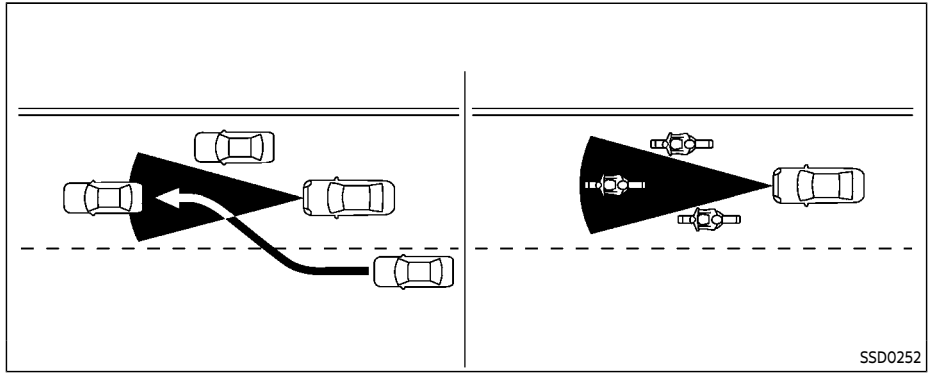

The detection zone of the radar sensor is limited. A vehicle ahead must be in the detection zone for the vehicle-to-vehicle distance detection mode to maintain the selected distance from the vehicle ahead.

A vehicle ahead may move outside of the detection zone due to its position within the same lane of travel. Motorcycles may not be detected in the same lane ahead if they are traveling offset from the centerline of the lane. A vehicle that is entering the lane ahead may not be detected until the vehicle has completely moved into the lane. **If this occurs, the ICC system may warn you by blinking the system indicator and sounding the chime. The driver may have to manually control the proper distance away from vehicle traveling ahead.**

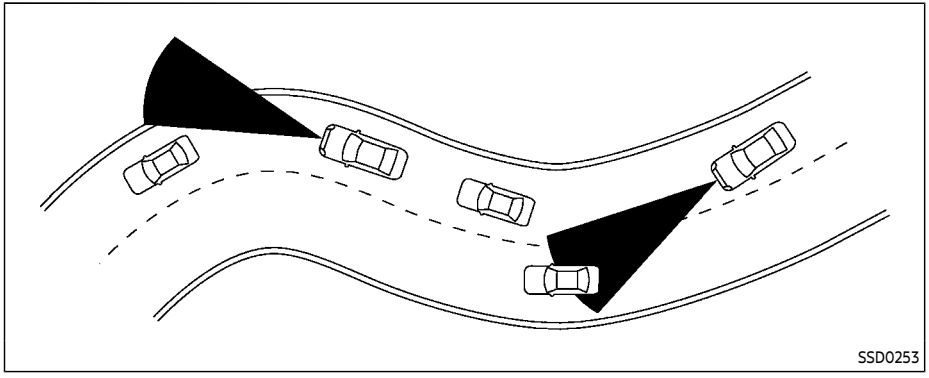

When driving on some roads, such as winding, hilly, curved, narrow roads, or roads which are under construction, the radar sensor may detect vehicles in a different lane, or may temporarily not detect a vehicle traveling ahead. This may cause the ICC system to decelerate or accelerate the vehicle.

The detection of vehicles may also be affected by vehicle operation (steering maneuver or traveling position in the lane, etc.) or vehicle condition. **If this occurs, the ICC system may warn you by blinking the system indicator and sounding the chime unexpectedly. You will have to manually control the proper distance away from the vehicle traveling ahead.**

System temporarily unavailable

The following are conditions in which the ICC system may be temporarily unavailable. In these instances, the ICC system may not cancel and may not be able to maintain the selected following distance from the vehicle ahead.

Condition A:

Under the following conditions, the ICC system is automatically canceled. A chime will sound and the system will not be able to be set:

- When the VDC is turned off
- When the ABS or VDC (including the traction control system) operates
- When a vehicle ahead is not detected and your vehicle is traveling below the speed of 15 MPH (24 km/h)
- When the system judges the vehicle is at a standstill
- When the shift lever is not in the D (Drive) or manual shift mode
- When the parking brake is applied
- When a tire slips
- When the radar signal is temporarily interrupted

Action to take:

When the conditions listed above are no longer present, turn the ICC system back on to use the system.

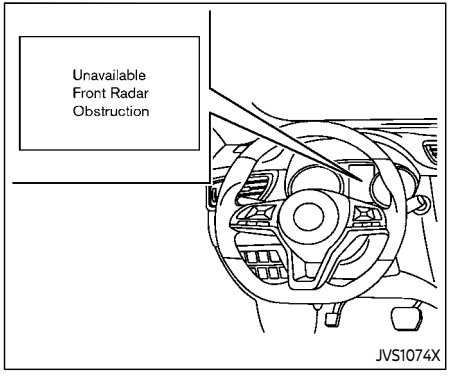

Condition B:

The chime will sound and the "Unavailable: Front Radar Obstruction" warning message will appear in the vehicle information display.

- When the radar sensor area is covered with dirt or is obstructed, making it impossible to detect a vehicle ahead, the ICC system is automatically canceled.

Action to take:

If the warning message appears, park the vehicle in a safe place and turn the engine off. When the radar signal is temporarily interrupted, clean the sensor area and restart the engine. If the "Unavailable: Front Radar Obstruction" warning message continues to be displayed, have the ICC system checked. It is recommended that you visit a NISSAN dealer for this service.

- When driving on roads with limited road structures or buildings (for example, long bridges, deserts, snow fields, driving next to long walls), the system may illuminate the ICC system warning (yellow) and display the "Unavailable: Front Radar Obstruction" message.

Action to take:

When the conditions listed above are no longer present, turn the ICC system back on to use the system.

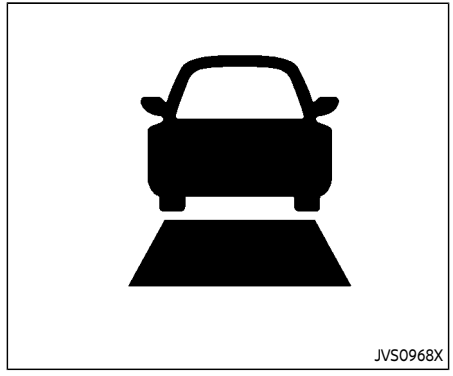

Condition C:

When the ICC system is not operating properly, the chime sounds and the ICC system warning (yellow) will appear.

Action to take:

If the warning appears, park the vehicle in a safe place. Turn the engine off, restart the engine, resume driving and set the ICC system again.

If it is not possible to set the system or the warning stays on, it may indicate that the ICC system is malfunctioning. Although the vehicle is still driveable under normal conditions, have the vehicle checked. It is recommended that you visit a NISSAN dealer for this ser-

vice.

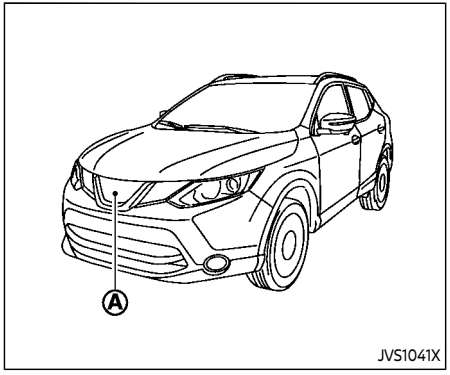

System maintenance

The sensor for the ICC system Ⓐ is located on the front of the vehicle.

To keep the ICC system operating properly, be sure to observe the following:

- Always keep the sensor area clean.
- Do not strike or damage the areas around the sensor.
- Do not cover or attach stickers or similar objects near the sensor area. This could cause failure or malfunction.
- Do not attach metallic objects near the sensor area (brush guard, etc.). This could cause failure or malfunction.
- Do not alter, remove or paint the front bumper. Before customizing or restoring the front bumper, it is recommended that you visit a NISSAN dealer.

Radio frequency statement

For USA

FCC : OAYSRR3B

This device complies with part 15 of the FCC Rules. Operation is subject to the following two conditions:

(1) This device may not cause harmful interference, and (2) this device must accept any interference received, including interference that may cause undesired operation.

FCC Warning

Changes or modifications not expressly approved by the party responsible for compliance could void the user's authority to operate the equipment

For Canada

Applicable law: Canada 310

This device complies with Industry Canada licence-exempt RSS standard(s). Operation is subject to the following two conditions: (1) this device may not cause interference, and (2) this device must accept any interference, including interference that may cause undesired

operation of the device.

Frequency bands: 24.05 – 24.25GHz

Output power: less than 20 milliwatts

CONVENTIONAL (fixed speed) CRUISE CONTROL MODE

This mode allows driving at a speed between 25 to 90 MPH (40 km/h to 144 km/h) without keeping your foot on the accelerator pedal.

WARNING

- **In the conventional (fixed speed) cruise control mode, a warning chime does not sound to warn you if you are too close to the vehicle ahead, as neither the presence of the vehicle ahead nor the vehicle-to-vehicle distance is detected.**
- **Pay special attention to the distance between your vehicle and the vehicle ahead of you or a collision could occur.**
- **Always confirm the setting in the ICC system display.**
- **Do not use the conventional (fixed speed) cruise control mode when driving under the following conditions:**
  - **— when it is not possible to keep the vehicle at a set speed**
  - **— in heavy traffic or in traffic that varies in speed**
  - **— on winding or hilly roads**
  - **— on slippery roads (rain, snow, ice, etc.)**
  - **— in very windy areas**
- **Doing so could cause a loss of vehicle control and result in an accident.**

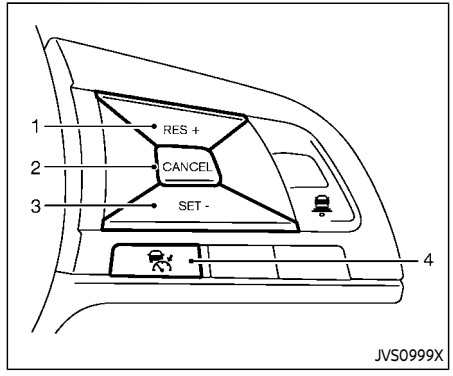

Type A

Conventional (fixed speed) cruise control switches

1. RES/+ switch:

   Resumes set speed or increases speed incrementally.
2. CANCEL switch:

   Deactivates the system without erasing the set speed.
3. SET/- switch:

   Sets the desired cruise speed, reduces speed incrementally.
4. CRUISE ON/OFF switch:

   Master switch to activate the system.

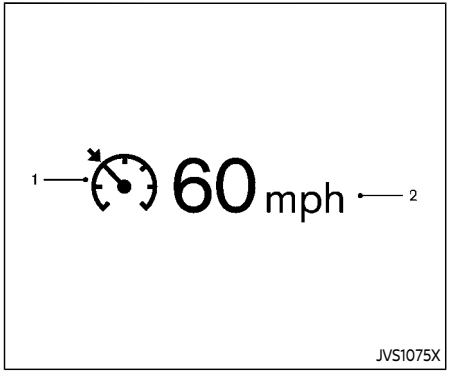

Conventional (fixed speed) cruise control mode display and indicators

The display is located in the vehicle information display.

1. Cruise indicator:

   This indicator indicates the condition of ICC system depending on a color.

   - Cruise control ON indicator (gray):

     Indicates that the Cruise ON/OFF switch is ON.
   - Cruise control set indicator (green):

     Displays while the vehicle speed is controlled by the conventional (fixed speed) cruise control mode of the ICC system.
   - Cruise system warning (yellow):

     Indicates that there is a malfunction in the ICC system.
2. Set vehicle speed indicator:

   This indicator indicates the set vehicle speed.

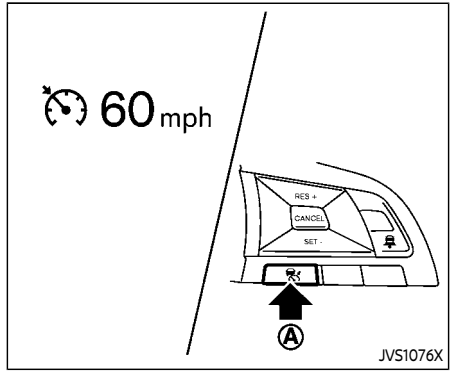

Operating conventional (fixed speed) cruise control mode

To turn on the conventional (fixed speed) cruise control mode, push and hold the Cruise ON/OFF switch Ⓐ for longer than about 1.5 seconds.

When pushing the CRUISE ON/OFF switch on, the conventional (fixed speed) cruise control mode display and indicators are displayed in the vehicle information display. After you hold the CRUISE ON/OFF switch on for longer than about 1.5 seconds, the ICC system display goes out. The cruise indicator appears. You can now set your desired cruising speed. Pushing the CRUISE ON/OFF switch again

will turn the system completely off.

When the ignition switch is placed in the OFF position, the system is also automatically turned off.

To use the ICC system again, quickly push and release the CRUISE ON/OFF switch (vehicle-to-vehicle distance control mode) or push and hold it (conventional cruise control mode) again to turn it on.

CAUTION

To avoid accidentally engaging cruise control, make sure to turn the CRUISE ON/OFF switch off when not using the ICC system.

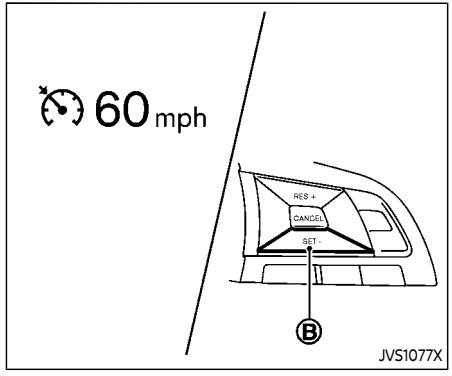

To set cruising speed, accelerate your vehicle to the desired speed, push the SET/- switch Ⓑ and release it. (The color of the cruise indicator changes to green and set vehicle speed indicator comes on.) Take your foot off the accelerator pedal. Your vehicle will maintain the set speed.

- **To pass another vehicle,** depress the accelerator pedal. When you release the pedal, the vehicle will return to the previously set speed.
- The vehicle may not maintain the set speed when going up or down steep hills. If this happens, manually maintain vehicle speed.

To cancel the preset speed, use any of the following methods:

1. Push the CANCEL switch. The vehicle speed indicator will turn off.
2. Tap the brake pedal. The vehicle speed indicator will turn off.
3. Turn the CRUISE ON/OFF switch off. Both the cruise indicator and set vehicle speed indicator will turn off.

To reset at a faster cruising speed, use one of the following three methods:

1. Depress the accelerator pedal. When the vehicle attains the desired speed, push and release the SET/- switch.
2. Push and hold the RES/+ switch. When the vehicle attains the desired speed, release the switch.
3. Push, then quickly release the RES/+ switch. Each time you do this, the set speed will increase by about 1 MPH (1.6 km/h).

To reset at a slower cruising speed, use one of the following three methods:

1. Lightly tap the brake pedal. When the vehicle attains the desired speed, push the SET/- switch and release it.
2. Push and hold the SET/- switch. Release the switch when the vehicle slows down to the desired speed.

3. Push, then quickly release the SET/- switch. Each time you do this, the set speed will decrease by about 1 MPH (1.6 km/h).

To resume the preset speed, push and release the RES/+ switch. The vehicle will resume the last set cruising speed when the vehicle speed is over 25 MPH (40 km/h).

System temporarily unavailable

A chime sounds under the following conditions and the control is automatically canceled.

- When the vehicle slows down more than 8 MPH (13 km/h) below the set speed
- When the shift lever is not in the D (Drive) or manual shift mode
- When the parking brake is applied.
- When the VDC (including the traction control system) operates
- When a wheel slips

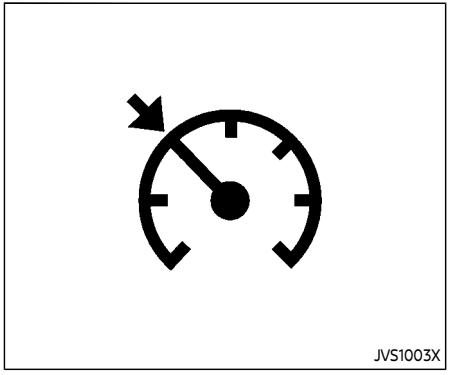

Warning

When the system is not operating properly, the chime sounds and the color of the cruise indicator will change to yellow.

Action to take:

If the color of the cruise indicator changes to yellow, park the vehicle in a safe place. Turn the engine off, restart the engine, resume driving and then perform the setting again.

If it is not possible to set or the indicator stays on, it may indicate that the system is malfunctioning. Although the vehicle is still driveable under normal conditions, have the vehicle checked. It is recommended that you visit a NISSAN dealer for this service.

AUTOMATIC EMERGENCY BRAKING (AEB) (if so equipped)

WARNING

Failure to follow the warnings and instructions for proper use of the AEB system could result in serious personal injury or death.

- **The AEB system is a supplemental aid to the driver. It is not a replacement for the driver's attention to traffic conditions or responsibility to drive safely. It cannot prevent accidents due to carelessness or dangerous driving techniques.**
- **The AEB system does not function in all driving, traffic, weather and road conditions.**

The AEB system can assist the driver when there is a risk of a forward collision with the vehicle ahead in the traveling lane.

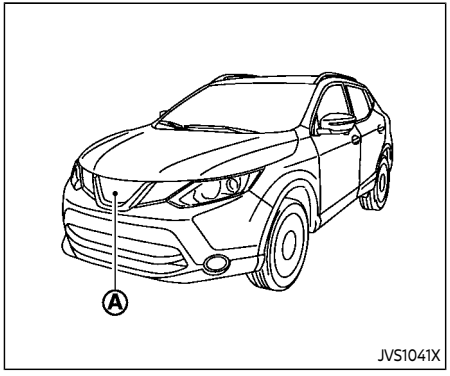

The AEB system uses a radar sensor Ⓐ located on the front of the vehicle to measure the distance to the vehicle ahead in the same lane.

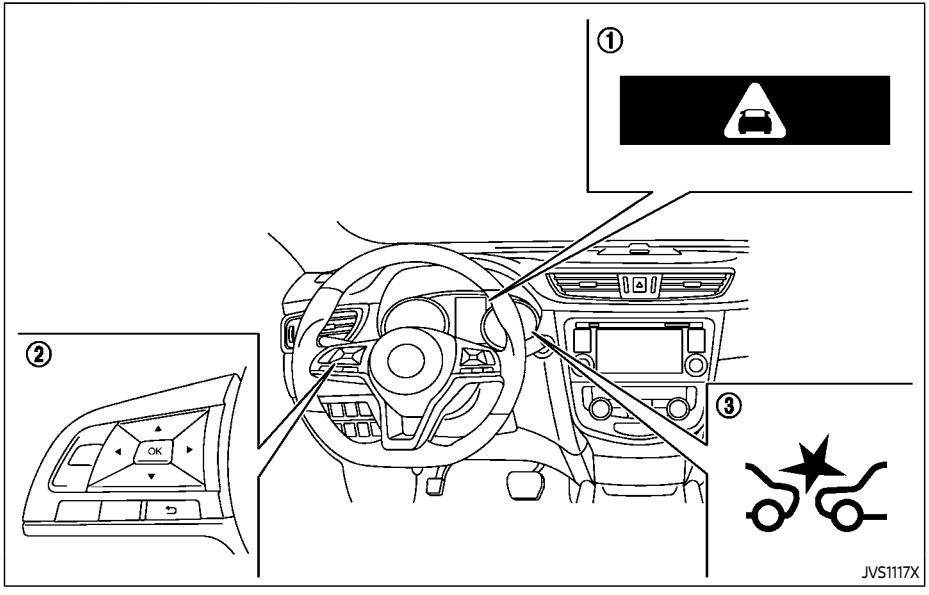

① AEB emergency warning indicator

② Steering-wheel-mounted controls (left side)

③ AEB system warning light (on the meter panel)

AEB SYSTEM OPERATION

The AEB system will function when your vehicle is driven at speeds above approximately 3 MPH (5 km/h).

If a risk of a forward collision is detected, the AEB system will firstly provide the warning to the driver by flashing the warning (yellow) in the vehicle information display and providing an audible alert.

If the driver applies the brakes quickly and forcefully after the warning, and the AEB system detects that there is still the possibility of a forward collision, the system will automatically increase the braking force.

If the driver does not take action, the AEB system issues the second visual (flashing) (red) and audible warning. If the driver releases the accelerator pedal, then the system applies partial braking.

If the risk of a collision becomes imminent, the AEB system applies harder braking automatically.

While the AEB system is operating, you may hear the sound of brake operation. This is normal and indicates that the AEB system is operating properly.

NOTE:

The vehicle's stop lights come on when braking is performed by the AEB system.

Depending on vehicle speed and distance to the vehicle ahead, as well as driving and roadway conditions, the system may help the driver avoid a forward collision or may help mitigate the consequences of a collision should one be unavoidable.

If the driver is handling the steering wheel, accelerating or braking, the AEB system will function later or will not function.

The automatic braking will cease under the following conditions:

- When the steering wheel is turned as far as necessary to avoid a collision.
- When the accelerator pedal is depressed.
- When there is no longer a vehicle detected ahead.

If the AEB system has stopped the vehicle, the vehicle will remain at a standstill for approximately 2 seconds before the brakes are released.

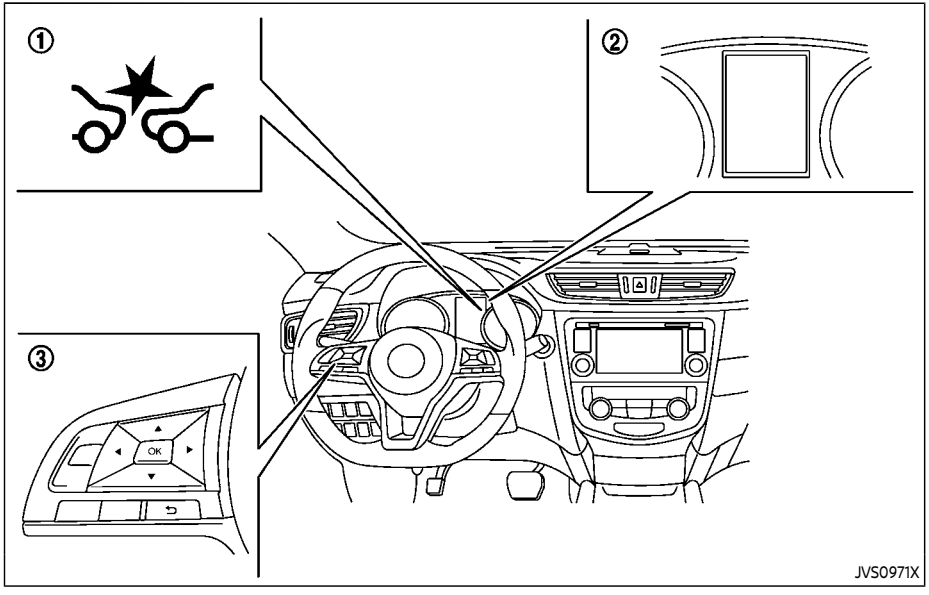

① AEB system warning light (on the meter panel)

② Vehicle information display

③ Steering-wheel-mounted controls (left side)

TURNING THE AEB SYSTEM ON/OFF

Perform the following steps to turn the AEB system on or off.

1. Press the ◀ ▶ button until "Settings" displays in the vehicle information display and then press "OK" button. Use the ⬍ button to select "Driver Assistance." Then press the "OK" button.
2. Select "Driving Aids" and press the "OK" button.
3. Use the "OK" button to check/uncheck the box for "Emergency Brake."

When the AEB system is turned off, the AEB system warning light (orange) ① illuminates.

NOTE:

The AEB system will be automatically turned ON when the engine is restarted.

AEB SYSTEM LIMITATIONS

WARNING

Listed below are the system limitations for the AEB system. Failure to operate the vehicle in accordance with these system limitations could result in serious injury or death.

- **The AEB system cannot detect all vehicles under all conditions.**
- **The radar sensor does not detect the following objects:**
  - **— Pedestrians, animals or obstacles in the roadway**
  - **— Oncoming vehicles**
  - **— Crossing vehicles**
- **The radar sensor has some performance limitations. If a stationary vehicle is in the vehicle's path, the AEB system will not function when the vehicle is driven at speeds over approximately 50 MPH (80 km/h).**
- **The radar sensor may not detect a vehicle ahead in the following conditions:**
  - **— Dirt, ice, snow or other material covering the radar sensor.**
  - **— Interference by other radar sources.**
  - **— Snow or road spray from traveling vehicles.**
  - **— If the vehicle ahead is narrow (e.g. motorcycle)**
  - **— When driving on a steep downhill slope or roads with sharp curves.**
- **In some road or traffic conditions, the AEB system may unexpectedly apply partial braking. When acceleration is necessary, continue to depress the accelerator pedal to override the system.**
- **The AEB system may react to a roadside object (traffic sign, guard rail etc.).**
- **Braking distances increase on slippery surfaces.**
- **The system is designed to automatically check the sensor's functionality, within certain limitations. The system may not detect some forms of obstruction of the sensor area such as ice, snow, stickers, for example. In these cases, the system may not be able to warn the driver properly. Be sure that you check, clean and clear the sensor area regularly.**
- **Excessive noise will interfere with the warning chime sound, and the chime may not be heard.**

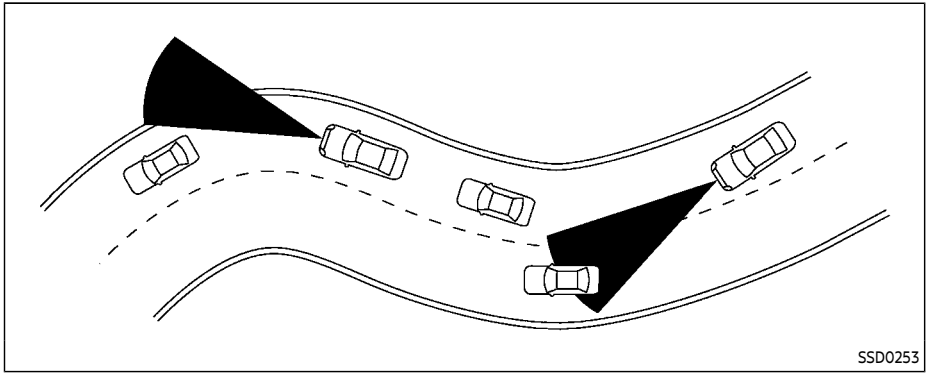

When driving on some roads, such as winding, hilly, curved, narrow roads, or roads which are under construction, the sensor may detect vehicles in a different lane, or may temporarily not detect a vehicle traveling ahead. This may cause the system to work inappropriately.

The detection of vehicles may also be affected by vehicle operation (steering maneuver or traveling position in the lane, etc.) or vehicle condition. **If this occurs, the system may warn you by blinking the system indicator and sounding the chime unexpectedly. You will have to manually control the proper distance away from the vehicle traveling ahead.**

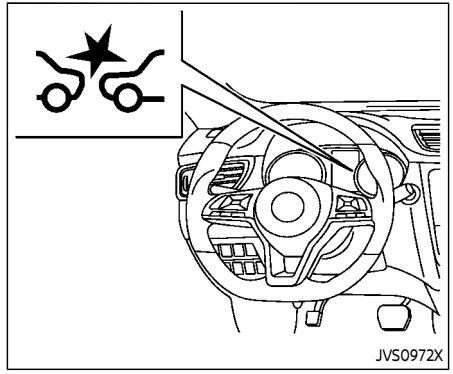

SYSTEM TEMPORARILY UNAVAILABLE

Condition A

When the radar sensor picks up interference from another radar source, making it impossible to detect a vehicle ahead, the AEB system is automatically turned off.

The AEB system warning light (orange) will illuminate.

Action to take

When the above conditions no longer exist, the AEB system will resume automatically.

Condition B

In the following conditions, the AEB system warning light (orange) will illuminate and the "Unavailable: Front Radar Obstruction" warning message will appear in the vehicle information display.

- The sensor area on the front of the vehicle is covered with dirt or is obstructed.

Action to take

If the warning light (orange) comes on, stop the vehicle in a safe place and turn the engine off. Clean the radar cover on the front of the vehicle with a soft cloth, and restart the engine. If the warning light continues to illuminate, have the AEB system checked. It is recommended that you visit a NISSAN dealer for this service.

- When driving on roads with limited road structures or buildings (for example, long bridges, deserts, snow fields, driving next to long walls).

Action to take

When the above conditions no longer exist, the AEB system will resume automatically.

Condition C

When the Vehicle Dynamic Control (VDC) system is OFF, the AEB brake will not operate. In this case only visible and audible warning operates. The AEB system warning light (orange) will illuminate.

Action to take

When the VDC system is ON, the AEB system will resume automatically.

SYSTEM MALFUNCTION

If the AEB system malfunctions, it will be turned off automatically, a chime will sound, the AEB system warning light (orange) will illuminate and the "Malfunction" warning message will appear in the vehicle information display.

Action to take:

If the AEB system warning light (orange) comes on, stop the vehicle in a safe location. Turn the engine off and restart the engine. If the warning light continues to illuminate, have the AEB system checked. It is recommended that you visit a NISSAN dealer for this service.

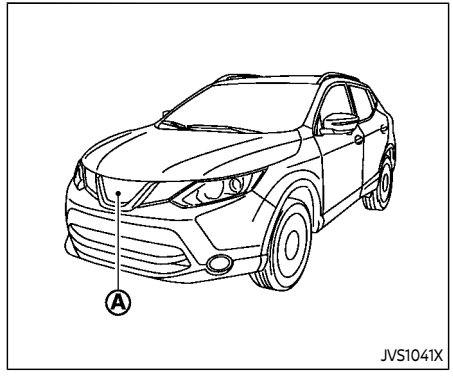

SYSTEM MAINTENANCE

The sensor Ⓐ is located on the front of the vehicle.

To keep the system operating properly, be sure to observe the following:

- Always keep the sensor area on the front of the vehicle clean.
- Do not strike or damage the areas around the sensor.
- Do not cover or attach stickers or similar objects on the front of the vehicle near the sensor area. This could cause failure or malfunction.
- Do not attach metallic objects near the sensor area (brush guard, etc.). This could cause failure or malfunc-

tion.

- Do not alter, remove or paint the front of the vehicle near the sensor area. Before customizing or restoring the sensor area, it is recommended that you visit a NISSAN dealer.

Radio frequency statement

For USA

FCC : OAYSRR3B

This device complies with part 15 of the FCC Rules. Operation is subject to the following two conditions:

(1) This device may not cause harmful interference, and (2) this device must accept any interference received, including interference that may cause undesired operation.

FCC Warning

Changes or modifications not expressly approved by the party responsible for compliance could void the user's authority to operate the equipment

For Canada

Applicable law: Canada 310

This device complies with Industry Canada licence-exempt RSS standard(s). Operation is subject to the following two conditions: (1) this device may not cause interference, and (2) this device must accept any interference, including interference that may cause undesired operation of the device.

Frequency bands: 24.05 – 24.25GHz

Output power: less than 20 milliwatts

AUTOMATIC EMERGENCY BRAKING (AEB) WITH PEDESTRIAN DETECTION SYSTEM*

*: if so equipped

WARNING

Failure to follow the warnings and instructions for proper use of the AEB with pedestrian detection system could result in serious injury or death.

- **The AEB with pedestrian detection system is a supplemental aid to the driver. It is not a replacement for the driver's attention to traffic conditions or responsibility to drive safely. It cannot prevent accidents due to carelessness or dangerous driving techniques.**
- **The AEB with pedestrian detection system does not function in all driving, traffic, weather and road conditions.**

The AEB with pedestrian detection system can assist the driver when there is a risk of a forward collision with the vehicle ahead in the traveling lane or with a pedestrian.

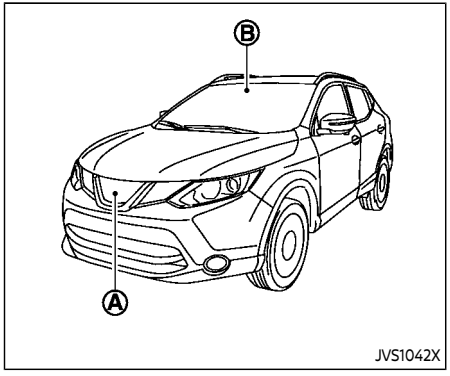

The AEB with pedestrian detection system uses a radar sensor Ⓐ located on the front of the vehicle to measure the distance to the vehicle ahead in the same lane.

For pedestrians, the AEB system uses a camera Ⓑ installed behind the windshield in addition to the radar sensor.

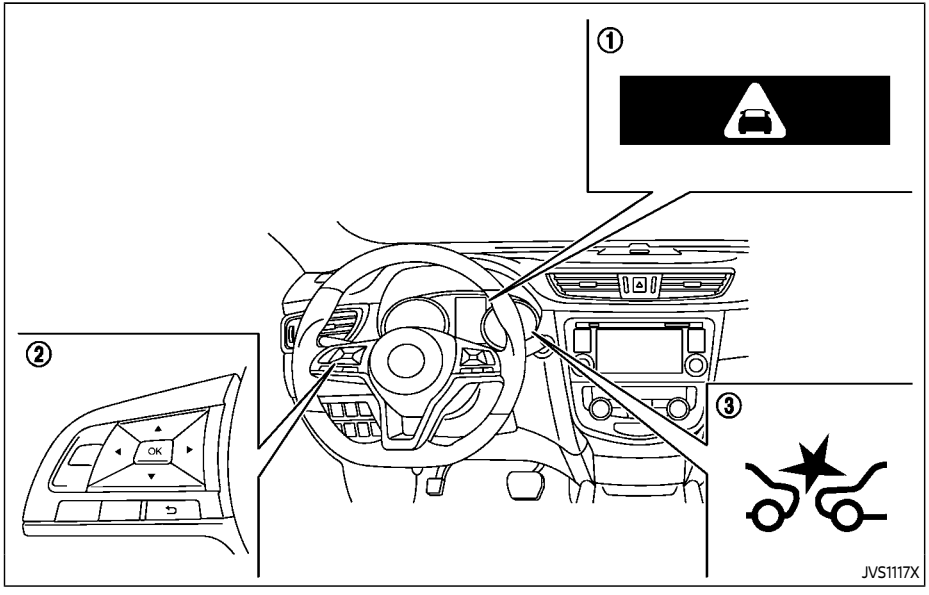

① AEB emergency warning indicator

② Steering-wheel-mounted controls (left side)

③ AEB system warning light (on the meter panel)

AEB WITH PEDESTRIAN DETECTION SYSTEM OPERATION

The AEB with pedestrian detection system will function when your vehicle is driven at speeds above approximately 3 MPH (5 km/h).

For the pedestrian detection function, the AEB with pedestrian detection system operates at speeds between 6 – 37 MPH (10 – 60 km/h).

If a risk of a forward collision is detected, the AEB with pedestrian detection system will firstly provide the warning to the driver by flashing the warning (yellow) in the vehicle information display and providing an audible alert.

If the driver applies the brakes quickly and forcefully after the warning, and the AEB with pedestrian detection system detects that there is still the possibility of a forward collision, the system will automatically increase the braking force.

If the driver does not take action, the AEB with pedestrian detection system issues the second visual (flashing) (red) and audible warning. If the driver releases the accelerator pedal, then the system applies partial braking.

If the risk of a collision becomes imminent, the AEB with pedestrian detection system applies harder braking automati-

cally.

While the AEB with pedestrian detection system is operating, you may hear the sound of brake operation. This is normal and indicates that the AEB with pedestrian detection system is operating properly.

NOTE:

The vehicle's stop lights come on when braking is performed by the AEB with pedestrian detection system.

Depending on vehicle speed and distance to the vehicle or pedestrian ahead, as well as driving and roadway conditions, the system may help the driver avoid a forward collision or may help mitigate the consequences of a collision should one be unavoidable.

If the driver is handling the steering wheel, accelerating or braking, the AEB with pedestrian detection system will function later or will not function.

The automatic braking will cease under the following conditions:

- When the steering wheel is turned as far as necessary to avoid a collision.
- When the accelerator pedal is depressed.
- When there is no longer a vehicle or pedestrian detected ahead.

If the AEB with pedestrian detection system has stopped the vehicle, the vehicle will remain at a standstill for approximately 2 seconds before the brakes are released.

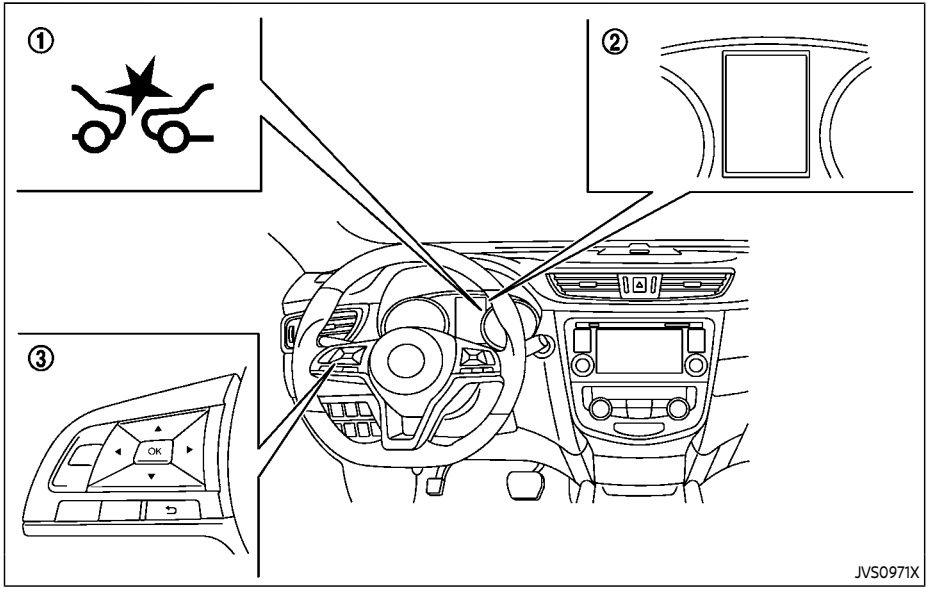

① AEB system warning light (on the meter panel)

② Vehicle information display

③ Steering-wheel-mounted controls (left side)

TURNING THE AEB WITH PEDESTRIAN DETECTION SYSTEM ON/OFF

Perform the following steps to turn the AEB with pedestrian detection system on or off.

1. Press the ◀ ▶ button until "Settings" displays in the vehicle information display and then press "OK" button. Use the ▲▼ button to select "Driver Assistance." Then press the "OK" button.
2. Select "Driving Aids" and press the "OK" button.
3. Use the "OK" button to check/uncheck the box for "Emergency Brake."

When the AEB with pedestrian detection system is turned off, the AEB with pedestrian detection system warning light illuminates ①.

NOTE:

- **The AEB with pedestrian detection system will be automatically turned ON when the engine is restarted.**

AEB WITH PEDESTRIAN DETECTION SYSTEM LIMITATIONS

WARNING

Listed below are the system limitations for the AEB with pedestrian detection system. Failure to operate the vehicle in accordance with these system limitations could result in serious injury or death.

- **The AEB with pedestrian detection system cannot detect all vehicles or pedestrians under all conditions.**
- **The AEB with pedestrian detection system does not detect the following objects:**
  - **Small pedestrians (including small children), animals and cyclists.**
  - **Pedestrians in wheelchairs or using mobile transport such as scooters, child-operated toys, or skateboards.**
  - **Pedestrians who are seated or otherwise not in a full upright standing or walking position.**
  - **Obstacles on the roadway**
  - **Oncoming vehicles**
  - **Crossing vehicles**
  - **Obstacles on the roadside**
- **The AEB with pedestrian detection system has some performance limitations.**
  - **If a stationary vehicle is in the vehicle's path, the AEB with pedestrian detection system will not function when the vehicle is driven at speeds over approximately 50 MPH (80 km/h).**
  - **For pedestrian detection, the AEB with pedestrian detection system will not function when the vehicle is driven at speeds over approximately 37 MPH (60 km/h) or below approximately 6 MPH (10 km/h).**
- **The AEB with pedestrian detection system may not function for pedestrians in darkness or in tunnels, even if there is street lighting in the area.**
- **For pedestrians, the AEB with pedestrian detection system will not issue the first warning.**
- **The AEB with pedestrian detection system may not function if the vehicle ahead is narrow (for example a motorcycle).**
- **The AEB with pedestrian detection system may not function if speed difference between the two vehicles is too small.**
- **The radar sensor may not function properly or detect a vehicle ahead in the following conditions:**
  - **Poor visibility (conditions such as rain, snow, fog, dust storms, sandstorms, and road spray from other vehicles)**
  - **Driving on a steep downhill slope or roads with sharp curves.**
  - **Driving on a bumpy road surface, such as an uneven dirt road.**
  - **If dirt, ice, snow or other material is covering the radar sensor area.**
  - **Interference by other radar sources.**
- **The camera may not function properly or detect a vehicle ahead in the following conditions:**

— The camera area of windshield is fogged up, or covered with dirt, water drops, ice, snow, etc.

— Strong light (for example, sunlight or high beams from oncoming vehicles) enters the front camera. Strong light causes the area around the pedestrian to be cast in a shadow, making it difficult to see.

— A sudden change in brightness occurs. (For example, when the vehicle enters or exits a tunnel or a shaded area or lightning flashes.)

— The poor contrast of a person to the background, such as having clothing color or pattern which is similar to the background.

— The pedestrian's profile is partially obscured or unidentifiable due to the pedestrian transporting cargo, wearing bulky or very loose-fitting clothing or accessories.

- The system performance may degrade in the following conditions:

  — The vehicle is driven on a slippery road.

  — The vehicle is driven on a slope.

  — Excessively heavy baggage is loaded in the rear seat or the cargo area of your vehicle.

- The system is designed to automatically check the sensor (radar and camera)'s functionality, within certain limitations. The system may not detect blockage of sensor areas covered by ice, snow or stickers, for example. In these cases, the system may not be able to warn the driver properly. Be sure that you check, clean and clear sensor areas regularly.
- In some road and traffic conditions, the AEB system may unexpectedly apply partial braking. When acceleration is necessary, depress the accelerator pedal to override the system.
- The AEB system may react a roadside object (traffic sign, guard rail etc.)
- Braking distances increase on slippery surfaces.
- Excessive noise will interfere with the warning chime sound, and the chime may not be heard.

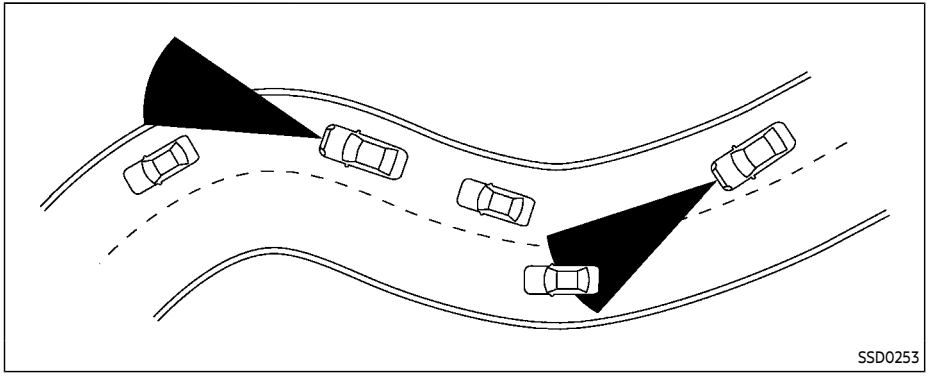

When driving on some roads, such as winding, hilly, curved, narrow roads, or roads which are under construction, the sensor may detect vehicles in a different lane, or may temporarily not detect a vehicle traveling ahead. This may cause the system to work inappropriately.

The detection of vehicles may also be affected by vehicle operation (steering maneuver or traveling position in the lane, etc.) or vehicle condition. **If this occurs, the system may warn you by blinking the system indicator and sounding the chime unexpectedly. You will have to manually control the proper distance away from the vehicle traveling ahead.**

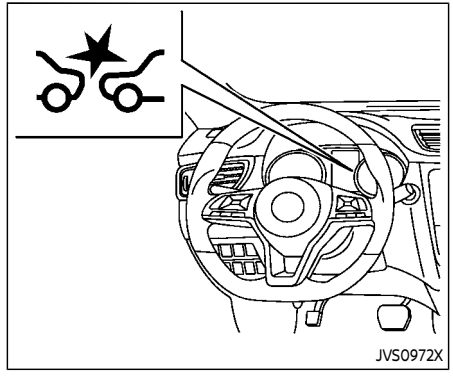

SYSTEM TEMPORARILY UNAVAILABLE

Condition A

In the following conditions, the AEB system warning light (orange) will illuminate and the system will be turned off automatically.

- The radar sensor picks up interference from another radar source.
- The camera area of windshield is misted or frozen.
- Strong light is shining from the front.
- The cabin temperature is over approximately 104°F (40°C) in direct sunlight.

- The camera area of windshield glass is continuously covered with dirt, etc.

Action to take:

When the above conditions no longer exist, the AEB with pedestrian detection system will resume automatically.

NOTE:

When the inside of the windshield on camera area is misted or frozen, it will take a period of time to remove it after air conditioner turns on. If dirt appears on this area, it is recommended you visit a NISSAN dealer.

Condition B

In the following condition, the AEB system warning light (orange) will illuminate and the "Unavailable: Front Radar Obstruction" warning message will appear in the vehicle information display.

- The sensor area of the front of the vehicle is covered with dirt or is obstructed

Action to take:

If the warning light (orange) comes on, stop the vehicle in a safe place and turn the engine off. Clean the radar cover on the front of the vehicle with a soft cloth, and restart the engine. If the warning light continues to illuminate, have the AEB with pedestrian detection system checked. It is recommended that you visit a NISSAN dealer for this service.

- When driving on roads with limited road structures or buildings (for example, long bridges, deserts, snow fields, driving next to long walls).

Action to take:

When the above conditions no longer exist, the AEB with pedestrian detection system will resume automatically.

Condition C

When VDC system is OFF, the AEB brake will not operate. In this case only visible and audible warning operates. The AEB system warning light (orange) will illuminate.

Action to take:

When VDC system is ON, the AEB with pedestrian detection system will resume automatically.

SYSTEM MALFUNCTION

If the AEB with pedestrian detection system malfunctions, it will be turned off automatically, a chime will sound, the AEB system warning light will (orange) will illuminate and the warning message "Malfunction" will appear in the vehicle information display.

Action to take:

If the warning light (orange) comes on, stop the vehicle in a safe location. Turn the engine off and restart the engine. If the warning light continues to illuminate, have the AEB with pedestrian detection system checked. It is recommended that you visit a NISSAN dealer for this service.

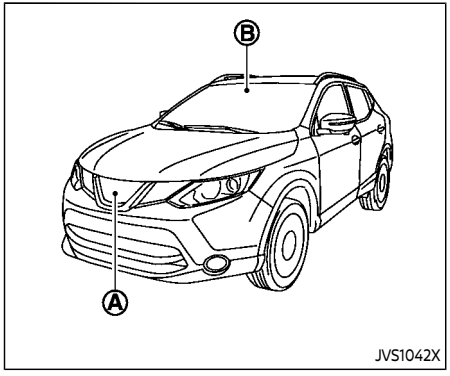

SYSTEM MAINTENANCE

The radar sensor Ⓐ is located on the front of the vehicle. The camera Ⓑ is located on the upper side of the windshield.

To keep the AEB with pedestrian detection system operating properly, be sure to observe the following:

- Always keep the sensor area on the front of the vehicle and windshield clean.
- Do not strike or damage the areas around the sensors (ex. bumper, windshield).
- Do not cover or attach stickers or similar objects on the front of the vehicle near the sensor area. This could cause failure or malfunction.
- Do not attach metallic objects near the radar sensor area (brush guard, etc.). This could cause failure or malfunction.
- Do not place reflective materials, such as white paper or a mirror, on the instrument panel. The reflection of sunlight may adversely affect the camera unit's detection capability.
- Do not alter, remove or paint the front of the vehicle near the sensor area. Before customizing or restoring the sensor area, it is recommended that you visit a NISSAN dealer.

Radio frequency statement

For USA

FCC : OAYSRR3B

This device complies with part 15 of the FCC Rules. Operation is subject to the following two conditions:

(1) This device may not cause harmful interference, and (2) this device must accept any interference received, including interference that may cause undesired operation.

FCC Warning

Changes or modifications not expressly approved by the party responsible for compliance could void the user's authority to operate the equipment

For Canada

Applicable law: Canada 310

This device complies with Industry Canada licence-exempt RSS standard(s). Operation is subject to the following two conditions: (1) this device may not cause interference, and (2) this device must accept any interference, including interference that may cause undesired operation of the device.

Frequency bands: 24.05 – 24.25GHz

Output power: less than 20 milliwatts

BREAK-IN SCHEDULE

CAUTION

During the first 1,200 miles (2,000 km), follow these recommendations to obtain maximum engine performance and ensure the future reliability and economy of your new vehicle. Failure to follow these recommendations may result in shortened engine life and reduced engine performance.

- Avoid driving for long periods at constant speed, either fast or slow. Do not run the engine over 4,000 rpm.
- Do not accelerate at full throttle in any gear.
- Avoid quick starts.
- Avoid hard braking as much as possible.

FUEL EFFICIENT DRIVING TIPS

Follow these easy-to-use Fuel Efficient Driving Tips to help you achieve the most fuel economy from your vehicle.

1. Use smooth accelerator and brake pedal application.
   - Avoid rapid starts and stops.
   - Use smooth, gentle accelerator and brake application whenever possible.
   - Maintain constant speed while commuting and coast whenever possible.
2. Maintain constant speed.
   - Look ahead to try and anticipate and minimize stops.
   - Synchronizing your speed with traffic lights allows you to reduce your number of stops.
   - Maintaining a steady speed can minimize red light stops and improve fuel efficiency.
3. Use air conditioning (A/C) at higher vehicle speeds.
   - Below 40 MPH (64 km/h), it is more efficient to open windows to cool the vehicle due to reduced engine load.
   - Above 40 MPH (64 km/h), it is more efficient to use A/C to cool the vehicle due to increased aerodynamic drag.
   - Recirculating the cool air in the cabin when the A/C is on reduces cooling load.
4. Drive at economical speeds and distances.
   - Observing the speed limit and not exceeding 60 MPH (97 km/h) (where legally allowed) can improve fuel efficiency due to reduced aerodynamic drag.
   - Maintaining a safe following distance behind other vehicles reduces unnecessary braking.
   - Safely monitoring traffic to anticipate changes in speed permits reduced braking and smooth acceleration changes.
   - Select a gear range suitable to road conditions.
5. Use cruise control.
   - Using cruise control during highway driving helps maintain a steady speed.
   - Cruise control is particularly effective in providing fuel savings when driving on flat terrains.
6. Plan for the shortest route.
   - Utilize a map or navigation system to determine the best route to save time.

7. Avoid idling.
   - Shutting off your engine when safe for stops exceeding 30-60 seconds saves fuel and reduces emissions.
8. Buy an automated pass for toll roads.
   - Automated passes permit drivers to use special lanes to maintain cruising speed through the toll and avoid stopping and starting.
9. Winter warm up.
   - Limit idling time to minimize impact to fuel economy.
   - Vehicles typically need no more than 30 seconds of idling at start-up to effectively circulate the engine oil before driving.
   - Your vehicle will reach its ideal operating temperature more quickly while driving versus idling.
10. Keeping your vehicle cool.
   - Park your vehicle in a covered parking area or in the shade whenever possible.
   - When entering a hot vehicle, opening the windows will help to reduce the inside temperature faster, resulting in reduced demand on your A/C system.

INCREASING FUEL ECONOMY

- Keep your engine tuned up.
- Follow the recommended scheduled maintenance.
- Keep the tires inflated to the correct pressure. Low tire pressure increases tire wear and lowers fuel economy.
- Keep the wheels in correct alignment. Improper alignment increases tire wear and lowers fuel economy.
- Use the recommended viscosity engine oil. (See "Engine oil and oil filter recommendation" (P.10-5).)

INTELLIGENT 4X4 (if so equipped)

If any malfunction occurs in the Intelligent 4x4 system while the engine is running, warning messages appear in the vehicle information display.

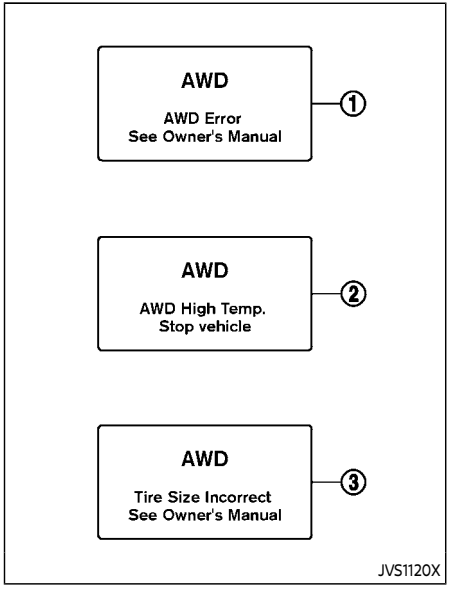

If the "AWD Error" warning ① appears, there may be a malfunction in the Intelligent 4x4 system. Reduce vehicle speed and have your vehicle checked by a NISSAN dealer as soon as possible.

The "AWD High Temp. Stop vehicle" (high temperature) warning ② may appear while trying to free a stuck vehicle due to increased oil temperature. The driving mode may change to Two-Wheel Drive (2WD). If this warning is displayed, stop the vehicle with the engine idling, as soon as it is safe to do so. Then if the warning turns off, you can continue driving.

The "Tire Size Incorrect" warning ③ may appear if there is a large difference between the diameters of front and rear wheels. Pull off the road in a safe area, with the engine idling. Check that all tire sizes are the same, that the tire pressure is correct and that the tires are not excessively worn. Turn off the Intelligent 4x4 LOCK switch and do not drive fast.

If any warning message continues to be displayed, have your vehicle checked by a NISSAN dealer as soon as possible.

WARNING

- **For AWD equipped vehicles, do not attempt to raise two wheels off the ground and shift the transmission to any drive or reverse position with the engine running. Doing so may result in drivetrain damage or unexpected vehicle movement which could result in serious vehicle damage or personal injury.**
- **Do not attempt to test an AWD equipped vehicle on a 2–wheel dynamometer (such as the dynamometers used by some states for emissions testing) or similar equipment even if the other two wheels are raised off the ground. Make sure that you inform the test facility personnel that your vehicle is equipped with AWD before it is placed on a dynamometer. Using the wrong test equipment may result in drive train damage or unexpected vehicle movement which could result in serious vehicle damage or personal injury.**

CAUTION

- **Do not operate the engine on a free roller when any of the wheels raised.**
- **The power train may be damaged if you continue driving with the "AWD Error" warning on.**
- **If the warning message remains on after the above operation, have your vehicle checked as soon as possible. It is recom-**

mended that you visit a NISSAN dealer for this service.

- **If the "AWD Error" warning appears while driving, there may be a malfunction in the AWD system.**

  Reduce the vehicle speed and have your vehicle checked as soon as possible. It is recommended that you visit a NISSAN dealer for this service.
- **Never drive on dry, hard surface roads in the LOCK mode, as this will overload the powertrain and may cause a serious malfunction.**

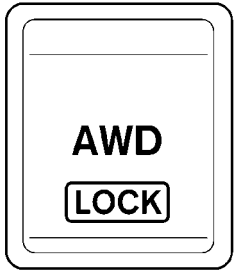

JVS1024X

INTELLIGENT 4X4 LOCK SWITCH OPERATIONS

The Intelligent 4x4 LOCK switch is located on the lower side of the instrument panel. This switch is used to select the AUTO or LOCK mode depending on the driving conditions.

LOCK mode:

The AWD LOCK indicator light will illuminate.

AUTO mode:

The AWD LOCK indicator light will turn off.

Each time you push the switch, the AWD mode will switch: AUTO → LOCK → AUTO.

AWD mode	Wheels driven	AWD LOCK indicator light	Use conditions
AUTO	Distribution of torque to the front and rear wheels changes automatically, depending on road conditions encountered [ratio; 100 : 0 ←→ 50 : 50]. This results in improved driving stability.*1	-	For driving on paved or slippery roads
LOCK	All-Wheel Drive (AWD) *2*3*	AWD LOCK	For driving on rough roads

*1: When the rotation difference between the front and rear wheels is large, the AWD mode may change from AUTO to LOCK for a while, however, this is not a malfunction.

*2: The LOCK mode will change to the AUTO mode automatically when the vehicle has been driven at a high speed. The AWD LOCK indicator light turns off.

*3: The LOCK mode will automatically be cancelled when the ignition switch is placed in the OFF position.

- The AWD torque distribution between the front and rear wheels can be displayed in the vehicle information display. See "Vehicle information display" (P.2-18).
- If the Intelligent 4x4 LOCK switch is operated while accelerating or decelerating, or if the ignition switch is turned off, you may feel a jolt. This is normal.
- The oil temperature of the powertrain parts will increase if the vehicle is continuously operated under conditions where the difference in rotation between the front and rear wheels is large (wheel slip), such as when driving the vehicle on rough roads, through sand or mud, or freeing a stuck vehicle. In these cases, the master warning light illuminates and the AWD mode changes to 2WD to protect the powertrain parts. Stop driving with the engine idling and wait until the warning light turns off and the AWD returns to the AUTO mode. If the warning light remains on, have your vehicle checked as soon as possible. It is recommended that you visit a NISSAN dealer for this service.

WARNING

- **When driving straight, shift the Intelligent 4x4 LOCK switch to AUTO. Do not operate the Intelligent 4x4 LOCK switch when making a turn or backing up.**
- **Do not operate the Intelligent 4x4 LOCK switch with the front wheel spinning.**
- **Engine idling speed is high while warming up the engine. Be especially careful when starting or driving on slippery surfaces.**
- **When turning the vehicle in LOCK mode on paved roads, you may feel a braking effect. This is a normal condition of the AWD model.**

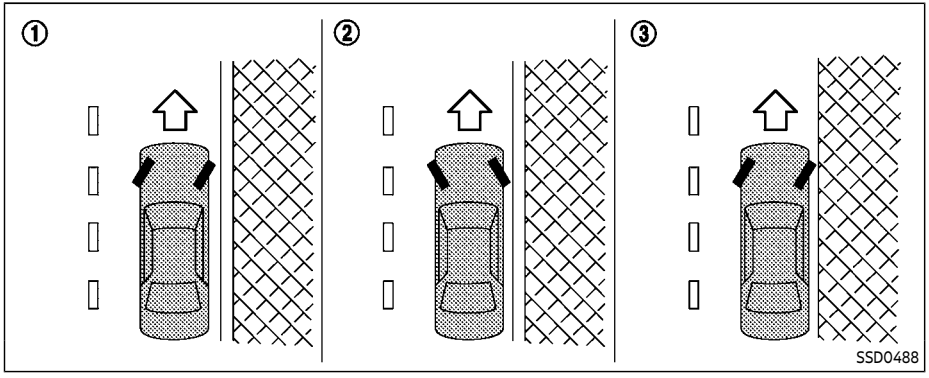

WARNING

- **Do not stop or park the vehicle over flammable materials such as dry grass, waste paper or rags. They may ignite and cause a fire.**
- **Never leave the engine running while the vehicle is unattended.**
- **Do not leave children unattended inside the vehicle. They could unknowingly activate switches or controls. Unattended children could become involved in serious accidents.**
- **To help avoid risk of injury or death through unintended operation of the vehicle and/or its systems, do not leave children, people who require the assistance of others or pets unattended in your vehicle. Additionally, the temperature inside a closed vehicle on a warm day can quickly become high enough to cause a significant risk of injury or death to people and pets.**
- **Safe parking procedures require that both the parking brake be applied and the transmission placed into P (Park) for Continuously Variable Transmission (CVT) model or in an appropriate gear for Manual Transmission (MT) model. Failure to do so could cause the vehicle to move unexpectedly or roll away and result in an accident.**
- **Make sure the CVT shift lever has been pushed as far forward as it can go and cannot be moved without depressing the foot brake pedal.**

1. Firmly apply the parking brake.
2. **Continuously Variable Transmission (CVT) models:**

   Move the shift lever to the P (Park) position.

   Manual Transmission (MT) models:

   Move the shift lever to the R (Reverse) gear. When parking on an uphill grade, place the shift lever in the 1st gear.
3. To help prevent the vehicle from rolling into the street when parked on a sloping drive way, it is a good practice to turn the wheels as illustrated.
   - HEADED DOWNHILL WITH CURB: ①

     Turn the wheels into the curb and move the vehicle forward until the curb side wheel gently touches the

curb.

- HEADED UPHILL WITH CURB: ②

  Turn the wheels away from the curb and move the vehicle back until the curb side wheel gently touches the curb.

- HEADED UPHILL OR DOWNHILL, NO CURB: ③

  Turn the wheels toward the side of the road so the vehicle will move away from the center of the road if it moves.

4. **Models with Intelligent Key system:**

   Place the ignition switch in the OFF position.

   Models without Intelligent Key system:

   Place the ignition switch in the LOCK position and remove the key.

WARNING

- **If the engine is not running or is turned off while driving, the power assist for the steering will not work. Steering will be harder to operate.**
- **When the electric power steering warning light illuminates with the engine running, the power assist for the steering will cease operation. You will still have control of the vehicle but the steering will be harder to operate.**

The electric power steering is designed to provide power assist while driving to operate the steering wheel with light force.

When the steering wheel is operated repeatedly or continuously while parking or driving at a very low speed, the power assist for the steering wheel will be reduced. This is to prevent overheating of the electric power steering and protect it from getting damaged. While the power assist is reduced, steering wheel operation will become heavy. When the temperature of the electric power steering goes down, the power assist level will return to normal. Avoid repeating such steering wheel operations that could cause the electric power steering to overheat.

You may hear a noise when the steering wheel is operated quickly. However, this is not a malfunction.

If the electric power steering warning light illuminates while the engine is running, it may indicate the electric power steering is not functioning properly and may need servicing. Have the electric power steering checked. It is recommended that you visit a NISSAN dealer for this service. (See "Electric power steering warning light" (P.2-12).)

When the electric power steering warning light illuminates with the engine running, the power assist for the steering will cease operation. You will still have control of the vehicle. However, greater steering effort is needed, especially in sharp turns and at low speeds.

The mode of the Power Steering can be changed to:

- NORMAL
- SPORT

For more information, see "Vehicle information display" (P.2-18).

BRAKING PRECAUTIONS

The brake system has two separate hydraulic circuits. If one circuit malfunctions, you will still have braking at two wheels.

Vacuum assisted brakes

The brake booster aids braking by using engine vacuum. If the engine stops, you can stop the vehicle by depressing the brake pedal. However, greater foot pressure on the brake pedal will be required to stop the vehicle and the stopping distance will be longer.

Using the brakes

Avoid resting your foot on the brake pedal while driving. This will cause overheating of the brakes, wearing out the brake pads faster and reduce gas mileage.

To help reduce brake wear and to prevent the brakes from overheating, reduce speed and downshift to a lower gear before going down a slope or long grade. Overheated brakes may reduce braking performance and could result in loss of vehicle control.

WARNING

- **While driving on a slippery surface, be careful when braking, accelerating or downshifting. Abrupt braking or accelerating could cause the wheels to skid and result in an accident.**
- **If the engine is not running or is turned off while driving, the power assist for the brakes will not work. Braking will be harder.**

Wet brakes

When the vehicle is washed or driven through water, the brakes may get wet. As a result, your braking distance will be longer and the vehicle may pull to one side during braking.

To dry brakes, drive the vehicle at a safe speed while lightly tapping the brake pedal to heat-up the brakes. Do this until the brakes return to normal. Avoid driving the vehicle at high speeds until the brakes function correctly.

Parking brake break-in

Break in the parking brake shoes whenever the stopping effect of the parking brake is weakened or whenever the parking brake shoes and/or drums/rotors are replaced, in order to assure the best braking performance.

This procedure is described in the vehicle service manual. It is recommended you visit a NISSAN dealer for this service.

BRAKE ASSIST

When the force applied to the brake pedal exceeds a certain level, the Brake Assist is activated generating greater braking force than a conventional brake booster even with light pedal force.

WARNING

The Brake Assist is only an aid to assist braking operation and is not a collision warning or avoidance device. It is the driver's responsibility to stay alert, drive safely and be in control of the vehicle at all times.

ANTI-LOCK BRAKING SYSTEM (ABS)

WARNING

- **The Anti-lock Braking System (ABS) is a sophisticated device, but it cannot prevent accidents resulting from careless or dangerous driving techniques. It can help maintain vehicle control during braking on slippery surfaces. Remember that stopping distances on slippery surfaces will be longer than on normal surfaces even with ABS. Stopping distances may also be longer on rough, gravel or snow covered roads, or if you are using tire chains. Always maintain a safe distance from the vehicle in front of you. Ultimately, the driver is responsible for safety.**
- **Tire type and condition may also affect braking effectiveness.**
  - **When replacing tires, install the specified size of tires on all four wheels.**
  - **When installing a spare tire, make sure that it is the proper size and type as specified on the Tire and Loading Information label. See "Tire and Loading Information label" (P.10-10) of this manual.**
  - **For detailed information, see "Wheels and tires" (P.8-29) of this manual.**

The Anti-lock Braking System (ABS) controls the brakes so the wheels do not lock during hard braking or when braking on slippery surfaces. The system detects the rotation speed at each wheel and varies the brake fluid pressure to prevent each wheel from locking and sliding. By preventing each wheel from locking, the system helps the driver maintain steering control and helps to minimize swerving and spinning on slippery surfaces.

Using the system

Depress the brake pedal and hold it down. Depress the brake pedal with firm steady pressure, but do not pump the brakes. The ABS will operate to prevent the wheels from locking up. Steer the vehicle to avoid obstacles.

WARNING

Do not pump the brake pedal. Doing so may result in increased stopping distances.

Self-test feature

The ABS includes electronic sensors, electric pumps, hydraulic solenoids and a computer. The computer has a built-in diagnostic feature that tests the system each time you start the engine and move the vehicle at a low speed in forward or reverse. When the self-test occurs, you may hear a "clunk" noise and/or feel a pulsation in the brake pedal. This is normal and does not indicate a malfunction. If the computer senses a malfunc-

tion, it switches the ABS off and illuminates the ABS warning light on the instrument panel. The brake system then operates normally, but without anti-lock assistance.

If the ABS warning light illuminates during the self-test or while driving, have the vehicle checked. It is recommended you visit a NISSAN dealer for this service.

Normal operation

The ABS operates at speeds above 3 to 6 MPH (5 to 10 km/h). The speed varies according to road conditions.

When the ABS senses that one or more wheels are close to locking up, the actuator rapidly applies and releases hydraulic pressure. This action is similar to pumping the brakes very quickly. You may feel a pulsation in the brake pedal and hear a noise from under the hood or feel a vibration from the actuator when it is operating. This is normal and indicates that the ABS is operating properly. However, the pulsation may indicate that road conditions are hazardous and extra care is required while driving.

The Vehicle Dynamic Control (VDC) system uses various sensors to monitor driver inputs and vehicle motion. Under certain driving conditions, the VDC system helps to perform the following functions.

- Controls brake pressure to reduce wheel slip on one slipping drive wheel so power is transferred to a non slipping drive wheel on the same axle.
- Controls brake pressure and engine output to reduce drive wheel slip based on vehicle speed (traction control function).
- Controls brake pressure at individual wheels and engine output to help the driver maintain control of the vehicle in the following conditions:
  - understeer (vehicle tends to not follow the steered path despite increased steering input)
  - oversteer (vehicle tends to spin due to certain road or driving conditions).

The VDC system can help the driver to maintain control of the vehicle, but it cannot prevent loss of vehicle control in all driving situations.

When the VDC system operates, the VDC warning light in the instrument panel flashes so note the following:

- The road may be slippery or the system may determine some action is required to help keep the vehicle on the steered path.
- You may feel a pulsation in the brake pedal and hear a noise or vibration from under the hood. This is normal and indicates that the VDC system is working properly.
- Adjust your speed and driving to the road conditions.

If a malfunction occurs in the system, the VDC warning light illuminates in the instrument panel. The VDC system automatically turns off.

The VDC OFF switch is used to turn off the VDC system. The VDC off indicator illuminates to indicate the VDC system is off. When the VDC switch is used to turn off the system, the VDC system still operates to prevent one drive wheel from slipping by transferring power to a non slipping drive wheel. The VDC warning light flashes if this occurs. All other VDC functions are off, and the VDC warning light will not flash. The VDC system is automatically reset to on when the ignition switch is placed in the off position then back to the on position.

See "Vehicle Dynamic Control (VDC) warning light" (P.2-15) and "Vehicle Dynamic Control (VDC) off indicator light" (P.2-17).

The computer has a built-in diagnostic feature that tests the system each time you start the engine and move the vehicle forward or in reverse at a slow speed. When the self-test occurs, you may hear a "clunk" noise and/or feel a pulsation in the brake pedal. This is normal and is not an indication of a malfunction.

WARNING

- **The VDC system is designed to help improve driving stability but does not prevent accidents due to abrupt steering operation at high speeds or by careless or dangerous driving techniques. Reduce vehicle speed and be especially careful when driving and cornering on slippery surfaces and always drive carefully.**
- **Do not modify the vehicle's suspension. If suspension parts such as shock absorbers, struts, springs, stabilizer bars, bushings and wheels are not NISSAN recommended for your vehicle or are extremely deteriorated, the VDC system may not operate properly. This could adversely affect vehicle handling performance, and the VDC warning light may illuminate.**
- **If brake related parts such as brake pads, rotors and calipers are not NISSAN recommended or are extremely deteriorated, the VDC system may not operate properly and the VDC warning light may illuminate.**
- **If engine control related parts are not NISSAN recommended or are extremely deteriorated, the VDC warning light may illuminate.**
- **When driving on extremely inclined surfaces such as higher banked corners, the VDC system may not operate properly and the VDC warning light may illuminate. Do not drive on these types of roads.**
- **When driving on an unstable surface such as a turntable, ferry, elevator or ramp, the VDC warning light may illuminate. This is not a malfunction. Restart the engine after driving onto a stable surface.**
- **If wheels or tires other than the NISSAN recommended ones are used, the VDC system may not operate properly and the VDC warning light may illuminate.**
- **The VDC system is not a substitute for winter tires or tire chains on a snow covered road.**

CHASSIS CONTROL

The chassis control is an electric control module that includes the following functions:

- Intelligent Trace Control
- Intelligent Engine Brake
- Active Ride Control

INTELLIGENT TRACE CONTROL

This system senses driving based on the driver's steering and acceleration/braking patterns, and controls brake pressure at individual wheels to aid tracing at corners and help smooth vehicle response.

Intelligent Trace Control can be set to ON (enabled) or OFF (disabled) through the Vehicle Information Display "Settings" page. See "Vehicle information display" (P.2-18) for more information.

When the Vehicle Dynamic Control (VDC) OFF switch is used to turn off the VDC system, the Intelligent Trace Control is also turned off.

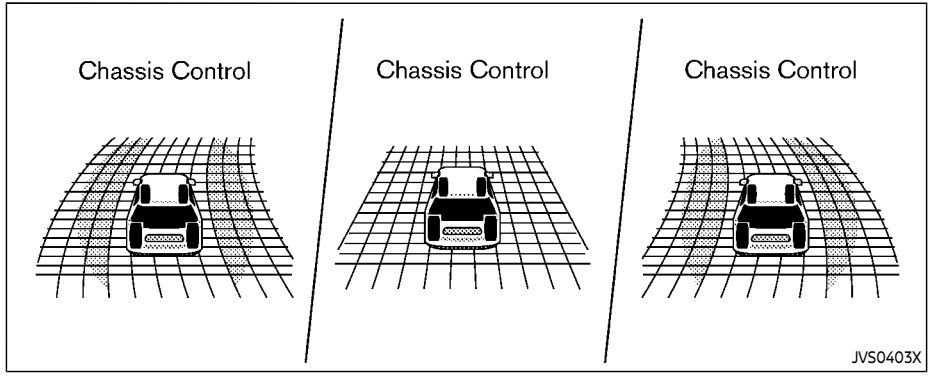

When the Intelligent Trace Control is operated and the "Chassis Control" mode is selected in the trip computer, the Intelligent Trace Control graphics are shown in the vehicle information display. (See "Trip computer" (P.2-34).)

If the chassis control warning message appears in the vehicle information display, it may indicate that the Intelligent Trace Control is not functioning properly. Have the system checked as soon as possible. It is recommended that you visit a NISSAN dealer for this service. (See "Vehicle information display warnings and indicators" (P.2-28).)

WARNING

The Intelligent Trace Control may not be effective depending on the driving condition. Always drive carefully and attentively.

When the Intelligent Trace Control is operating, you may feel a pulsation in the brake pedal and hear a noise. This is normal and indicates that the Intelligent Trace Control is operating properly.

Even if the Intelligent Trace Control is set to OFF, some functions will remain on to assist the driver (for example, avoidance

scenes).

INTELLIGENT ENGINE BRAKE (Continuously Variable Transmission (CVT) models)

The Intelligent Engine Brake function adds subtle deceleration by controlling CVT gear ratio, depending on the cornering condition calculated from driver's steering input and plural sensors. This benefit to easier traceability and less workload of adjusting speed with braking at corners.

The Intelligent Engine Brake also adds subtle deceleration with gear ratio control according to driver's brake pedal operation.

The Intelligent Engine Brake can be set to ON (enabled) or OFF (disabled) through the Vehicle Information Display "Settings" page. See "Vehicle information display" (P.2-18) for more information.

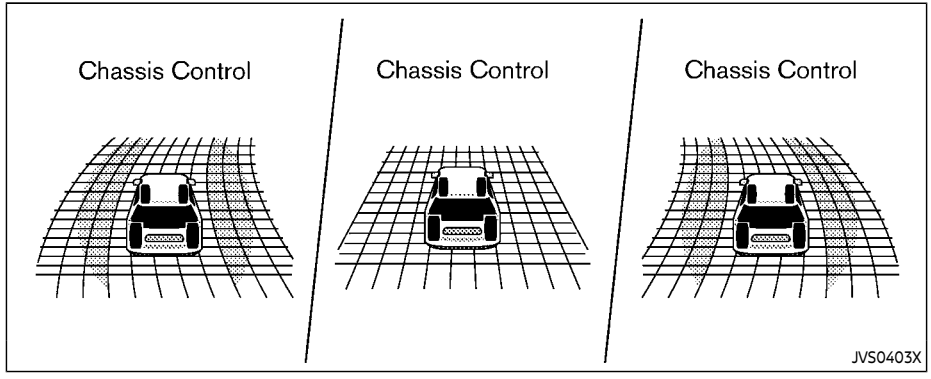

When the Intelligent Engine Brake is operated at corners and the "Chassis Control" mode is selected in the trip computer, the Intelligent Engine Brake graphics are shown in the vehicle information display. See "Trip computer" (P.2-34) for more information.

If the chassis control warning message appears in the vehicle information display, it may indicate that the Intelligent Engine Brake is not functioning properly. Have the system checked as soon as possible. It is recommended that you visit a NISSAN dealer for this service.

WARNING

The Intelligent Engine Brake may not be effective depending on the driving condition. Always drive carefully and attentively.

When the Intelligent Engine Brake is operating, the needle of the tachometer will rise up and you may hear an engine noise. This is normal and indicates that the Intelligent Engine Brake is operating properly.

ACTIVE RIDE CONTROL

This system senses upper body motion based on wheel speed information and controls engine torque and four wheel brake pressure to enhance ride comfort in effort to restrain uncomfortable upper body movement. This system come into effect above 25 MPH (40 km/h). When the VDC OFF switch is used to turn off the VDC system, the Active Ride Control is also turned off.

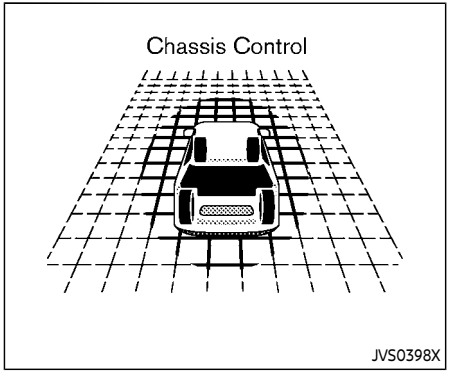

When the brake control of the Active Ride Control is operated and the "Chassis Control" mode is selected in the trip computer, the Active Ride Control graphics are shown in the vehicle information display. See "Trip computer" (P.2-34) for more information.

If the chassis control warning message appears in the vehicle information display, it may indicate that the Active Ride Control is not functioning properly. Have the system checked as soon as possible. It is recommended that you visit a NISSAN dealer for this service.

When the Active Ride Control is operating, you may hear noise and sense slight deceleration. This is normal and indicates that the Active Ride Control is operating properly.

WARNING

- **Never rely solely on the hill start assist system to prevent the vehicle from moving backward on a hill. Always drive carefully and attentively. Depress the brake pedal when the vehicle is stopped on a steep hill. Be especially careful when stopped on a hill on frozen or muddy roads. Failure to prevent the vehicle from rolling backwards may result in a loss of control of the vehicle and possible serious injury or death.**
- **The hill start assist system is not designed to hold the vehicle at a standstill on a hill. Depress the brake pedal when the vehicle is stopped on a steep hill. Failure to do so may cause the vehicle to roll backwards and may result in a collision or serious personal injury.**
- **The hill start assist system may not prevent the vehicle from rolling backwards on a hill under all load or road conditions. Always be prepared to depress the brake pedal to prevent the vehicle from rolling backwards. Failure to do so may result in a collision or serious personal injury.**

The hill start assist system automatically keeps the brakes applied to help prevent the vehicle from rolling backwards in the time it takes the driver to release the brake pedal and apply the accelerator when the vehicle is stopped on a hill.

The hill start assist system will operate automatically under the following conditions:

- The transmission is shifted to a forward or reverse gear.
- The vehicle is stopped completely on a hill by applying the brake.

The maximum holding time is 2 seconds. After 2 seconds the vehicle will begin to roll back and the hill start assist system will stop operating completely.

The hill start assist system will not operate when the transmission is shifted to the N (Neutral) or P (Park) position (CVT models) or on a flat and level road.

When the Vehicle Dynamic Control (VDC) warning light illuminates in the meter, the hill start assist system will not operate. (See “Vehicle Dynamic Control (VDC) warning light” (P.2-15).)

FREEING A FROZEN DOOR LOCK

To prevent a door lock from freezing, apply deicer through the key hole. If the lock becomes frozen, heat the key before inserting it into the key hole, or use the Intelligent Key system or the remote keyless entry key fob.

ANTI-FREEZE

In the winter when it is anticipated that the outside temperature will drop below 32°F (0°C), check the anti-freeze to assure proper winter protection. For additional information, see “Engine cooling system” (P.8-4).

BATTERY

If the battery is not fully charged during extremely cold weather conditions, the battery fluid may freeze and damage the battery. To maintain maximum efficiency, the battery should be checked regularly. For additional information, see “Battery” (P.8-11).

DRAINING OF COOLANT WATER

If the vehicle is to be left outside without anti-freeze, drain the cooling system, including the engine block. Refill before operating the vehicle. For details, see “Engine cooling system” (P.8-4).

TIRE EQUIPMENT

SUMMER tires have a tread designed to provide superior performance on dry pavement. However, the performance of these tires will be substantially reduced in snowy and icy conditions. If you operate your vehicle on snowy or icy roads, NISSAN recommends the use of MUD & SNOW or ALL SEASON tires on all four wheels. It is recommended you consult a NISSAN dealer for the tire type, size, speed rating and availability information.

For additional traction on icy roads, studded tires may be used. However, some U.S. states and Canadian provinces prohibit their use. Check local, state and provincial laws before installing studded tires.

Skid and traction capabilities of studded snow tires, on wet or dry surfaces, may be poorer than that of non-studded snow tires.

Tire chains may be used. For details, see "Tire chains" (P.8-36) of this manual.

All-Wheel Drive (AWD) model

If you install snow tires, they must also be the same size, brand, construction and tread pattern on all four wheels.

SPECIAL WINTER EQUIPMENT

It is recommended that the following items be carried in the vehicle during winter:

- A scraper and stiff-bristled brush to remove ice and snow from the windows and wiper blades.
- A sturdy, flat board to be placed under the jack to give it firm support.
- A shovel to dig the vehicle out of snow-drifts.
- Extra window washer fluid to refill the reservoir tank.

DRIVING ON SNOW OR ICE

WARNING

- **Wet ice (32°F, 0°C and freezing rain), very cold snow or ice can be slick and very hard to drive on. The vehicle will have much less traction or "grip" under these conditions. Try to avoid driving on wet ice until the road is salted or sanded.**
- **Whatever the condition, drive with caution. Accelerate and slow down with care. If accelerating or downshifting too fast, the drive wheels will lose even more traction.**
- **Allow more stopping distance under these conditions. Braking should be started sooner than on dry pavement.**
- **Allow greater following distances on slippery roads.**
- **Watch for slippery spots (glare ice). These may appear on an otherwise clear road in shaded areas. If a patch of ice is seen ahead, brake before reaching it. Try not to brake while on the ice, and avoid any sudden steering maneuvers.**
- **Do not use cruise control on slippery roads.**
- **Snow can trap dangerous exhaust gases under your vehicle. Keep snow clear of the exhaust pipe and from around your vehicle.**

6 In case of emergency

Hazard warning flasher switch 6-2
Roadside assistance program 6-2
Emergency engine shut off (models with push-button ignition switch) 6-3
Flat tire 6-3
Tire Pressure Monitoring System (TPMS) 6-3
Changing a flat tire 6-4
Jump starting 6-9
Push starting 6-11
If your vehicle overheats 6-11
Towing your vehicle 6-13
Towing recommended by NISSAN 6-14
Vehicle recovery (freeing a stuck vehicle) 6-16

HAZARD WARNING FLASHER SWITCH

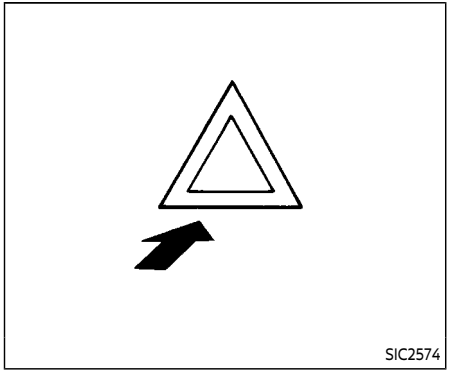

Push the switch on to warn other drivers when you must stop or park under emergency conditions. All turn signal lights will flash.

WARNING

- **If stopping for an emergency, be sure to move the vehicle well off the road.**
- **Do not use the hazard warning flashers while moving on the highway unless unusual circumstances force you to drive so slowly that your vehicle might become a hazard to other traffic.**
- **Turn signals do not work when the hazard warning flasher lights are on.**

The flasher can be actuated with the ignition switch in any position.

Some state laws may prohibit the use of the hazard warning flasher switch while driving.

ROADSIDE ASSISTANCE PROGRAM

In the event of a roadside emergency, Roadside Assistance Service is available to you. Please refer to your Warranty Information Booklet (U.S.) or Warranty & Roadside Assistance Information Booklet (Canada) for details.

EMERGENCY ENGINE SHUT OFF (models with push-button ignition switch)

To shut off the engine in an emergency situation while driving, perform the following procedure:

- Rapidly push the push-button ignition switch 3 consecutive times in less than 1.5 seconds, or
- Push and hold the push-button ignition switch for more than 2 seconds.

FLAT TIRE

TIRE PRESSURE MONITORING SYSTEM (TPMS)

This vehicle is equipped with the Tire Pressure Monitoring System (TPMS). It monitors tire pressure of all tires except the spare. When the low tire pressure warning light is lit, and the "Tire Pressure Low - Add Air" warning message is displayed in the vehicle information display, one or more of your tires is significantly under-inflated. If the vehicle is being driven with low tire pressure, the TPMS will activate and warn you of it by the low tire pressure warning light. This system will activate only when the vehicle is driven at speeds above 16 MPH (25 km/h). For more details, see "Warning lights, indicator lights and audible reminders" (P.2-10) and "Tire Pressure Monitoring System (TPMS)" (P.5-5).

WARNING

- **If the low tire pressure warning light illuminates while driving, avoid sudden steering maneuvers or abrupt braking, reduce vehicle speed, pull off the road to a safe location and stop the vehicle as soon as possible. Driving with under-inflated tires may permanently damage the tires and increase the likelihood of tire failure. Serious vehicle damage could occur and may lead to an accident and could result in serious personal injury. Check the tire pressure for all four tires. Adjust the tire pressure to the recommended COLD tire pressure shown on the Tire and Loading Information label to turn the low tire pressure warning light OFF. If the light still illuminates while driving after adjusting the tire pressure, a tire may be flat. If you have a flat tire, replace it with a spare tire as soon as possible.**
- **Since the spare tire is not equipped with the TPMS, when a spare tire is mounted or a wheel is replaced, the TPMS will not function and the low tire pressure warning light will flash for approximately 1 minute. The light will remain on after 1 minute. Have your tires replaced and/or TPMS system reset as soon as possible. It is recommended you visit a NISSAN dealer for these services.**
- **Replacing tires with those not originally specified by NISSAN could affect the proper operation**

of the TPMS.

- **Do not inject any tire liquid or aerosol tire sealant into the tires, as this may cause a malfunction of the tire pressure sensors.**

CHANGING A FLAT TIRE

If you have a flat tire, follow the instructions below.

Stopping the vehicle

1. Safely move the vehicle off the road and away from traffic.
2. Turn on the hazard warning flashers.
3. Park on a level surface and apply the parking brake.
4. **Continuously Variable Transmission (CVT) models:**

   Move the shift lever to the P (Park) position.

   Manual Transmission (MT) models:

   Move the shift lever to the R (Reverse) position.
5. Turn off the engine.
6. Raise the hood to warn other traffic, and to signal professional road assistance personnel that you need assistance.
7. Have all passengers get out of the vehicle and stand in a safe place, away from traffic and clear of the vehicle.

WARNING

- **Make sure the parking brake is securely applied and the Manual Transmission is shifted into R (Reverse), or the CVT into P (Park).**
- **Never change tires when the vehicle is on a slope, ice or slippery areas. This is hazardous.**
- **Never change tires if oncoming traffic is close to your vehicle. Wait for professional road assistance.**

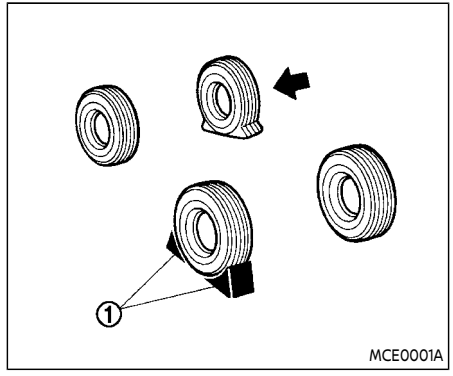

Blocking wheels

Place suitable blocks ① at both the front and back of the wheel diagonally opposite the flat tire to prevent the vehicle from moving when it is jacked up.

WARNING

Be sure to block the wheel as the vehicle may move and result in personal injury.

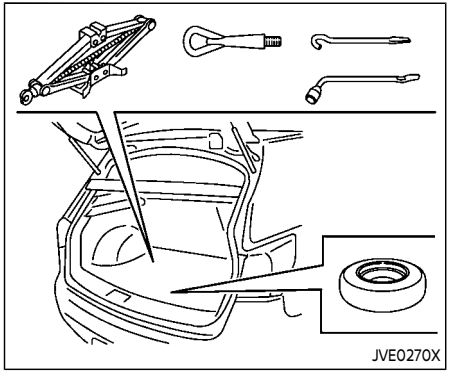

Getting the spare tire and tools

Remove the jack, necessary tools and the spare tire from the storage area.

The spare tire, jack and tools are located under the flexible luggage boards (if so equipped) and cover.

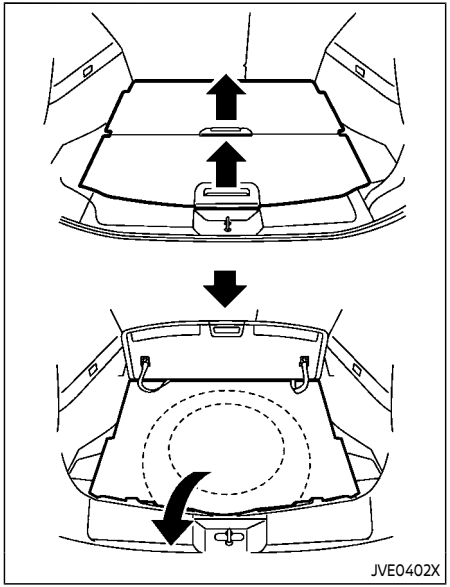

Pull up the flexible luggage boards (if so equipped) and cover.

Remove the jack and tools from the storage area.

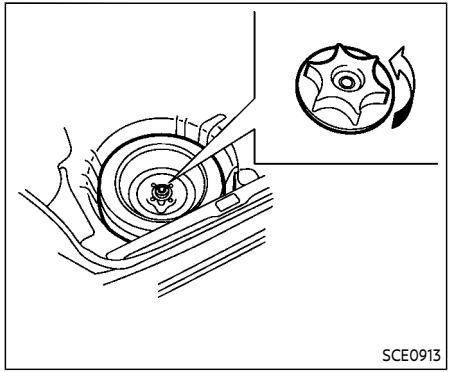

Remove the clamp holding the spare tire.

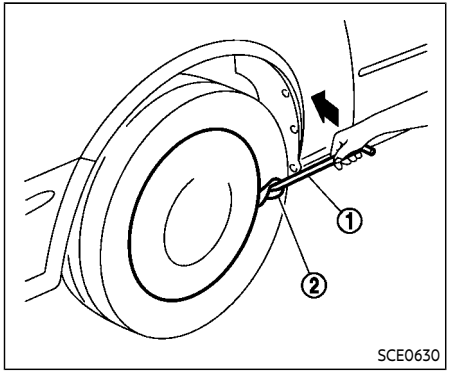

Removing wheel cover (if so equipped)

WARNING

Never use your hands to remove the wheel cover. This may cause personal injury.

To remove the wheel cover, use the jack rod ① as illustrated.

Apply cloth ② between the wheel and jack rod to prevent damaging the wheel and wheel cover.

Jacking up the vehicle and removing the damaged tire

WARNING

- **Never get under the vehicle while it is supported only by the jack. If it is necessary to work under the vehicle, support it with safety stands.**
- **Use only the jack provided with your vehicle to lift the vehicle. Do not use the jack provided with your vehicle on other vehicles. The jack is designed for lifting only your vehicle during a tire change.**
- **Use the correct jack-up points. Never use any other part of the vehicle for jack support.**
- **Never jack up the vehicle more than necessary.**
- **Never use blocks on or under the jack.**
- **Do not start or run the engine while vehicle is on the jack, as it may cause the vehicle to move.**
- **Do not allow passengers to stay in the vehicle while it is on the jack.**

Carefully read the caution label attached to the jack body and the following instructions.

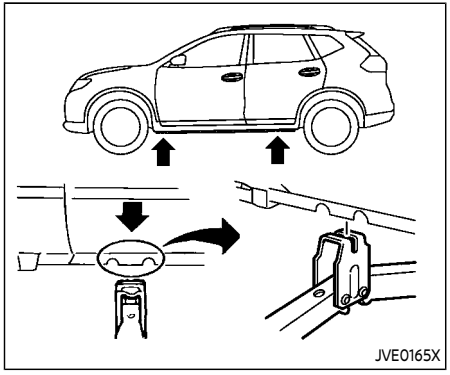

Jack-up point

1. Place the jack directly under the jack-up point as illustrated so the top of the jack contacts the vehicle at the jack-up point. Align the jack head between the two notches in the front or the rear as shown. Also fit the groove of the jack head between the notches as shown.

   The jack should be used on level firm ground.

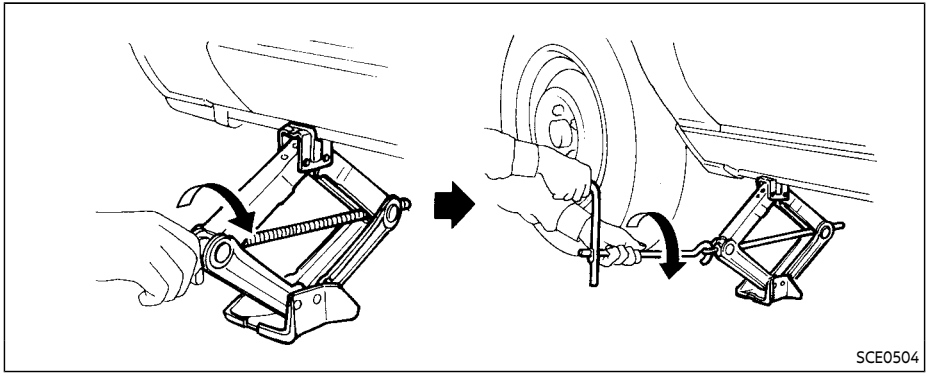

2. Loosen each wheel nut one or two turns by turning it counterclockwise with the wheel nut wrench. **Do not remove the wheel nuts until the tire is off the ground.**
3. To lift the vehicle, securely hold the jack lever and rod with both hands as shown above. Carefully raise the vehicle until the tire clears the ground. Remove the wheel nuts, and then remove the tire.

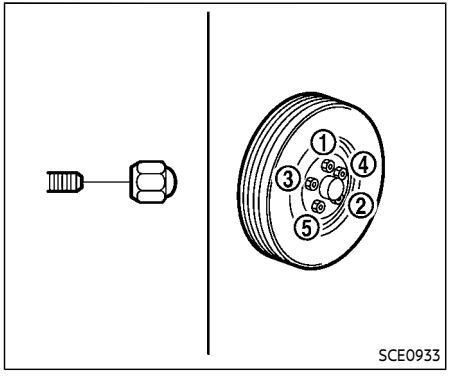

Installing the spare tire

The spare tire is designed for emergency use. (See specific instructions under the heading "Wheels and tires" (P.8-29).)

1. Clean any mud or dirt from the surface between the wheel and hub.
2. Carefully put the spare tire on and tighten the wheel nuts finger tight. Check that all the wheel nuts contact the wheel surface horizontally.
3. With the wheel nut wrench, tighten wheel nuts alternately and evenly in the sequence illustrated (①, ②, ③, ④, ⑤), more than 2 times, until they are tight.
4. Lower the vehicle slowly until the tire touches the ground. Then, with the wheel nut wrench, tighten the wheel nuts securely in the sequence illustrated. Lower the vehicle completely.

WARNING

- **Incorrect wheel nuts or improperly tightened wheel nuts can cause the wheel to become loose or come off. This could cause an accident.**
- **Do not use oil or grease on the wheel studs or nuts. This could cause the nuts to become loose.**
- **Retighten the wheel nuts when the vehicle has been driven for 600 miles (1,000 km) (also in cases of a flat tire, etc.).**

- **As soon as possible, tighten the wheel nuts to the specified torque with a torque wrench.**

Wheel nut tightening torque:
80 ft-lb (108 N·m)

The wheel nuts must be kept tightened to specifications at all times. It is recommended that the wheel nuts be tightened to specifications at each lubrication interval.

- **Adjust tire pressure to the COLD pressure.**

COLD pressure:

After the vehicle has been parked for 3 hours or more or driven less than 1 mile (1.6 km).

COLD tire pressures are shown on the Tire and Loading Information label affixed to the driver side center pillar.

Stowing the damaged tire and the tools

1. Securely store the jack, tools and the damaged tire in the storage area.
2. Replace the flexible luggage boards (if so equipped) and cover.
3. Close the liftgate.

WARNING

- **Always make sure that the spare tire and jacking equipment are properly secured after use. Such items can become dangerous projectiles in an accident or sudden stop.**

- **The spare tire is designed for emergency use. See specific instructions under the heading "Wheels and tires" (P.8-29).**

JUMP STARTING

To start your engine with a booster battery, the instructions and precautions below must be followed.

WARNING

- **If done incorrectly, jump starting can lead to a battery explosion, resulting in severe injury or death. It could also damage your vehicle.**
- **Explosive hydrogen gas is always present in the vicinity of the battery. Keep all sparks and flames away from the battery.**
- **Do not allow battery fluid to come into contact with eyes, skin, clothing or painted surfaces. Battery fluid is a corrosive sulfuric acid solution which can cause severe burns. If the fluid should come into contact with anything, immediately flush the contacted area with water.**
- **Keep the battery out of the reach of children.**
- **The booster battery must be rated at 12 volts. Use of an improperly rated battery can damage your vehicle.**
- **Whenever working on or near a battery, always wear suitable eye protectors (for example, goggles or industrial safety spectacles) and remove rings, metal bands, or any other jewelry. Do not lean over the battery when jump starting.**
- **Do not attempt to jump start a frozen battery. It could explode and cause serious injury.**
- **Your vehicle has an automatic engine cooling fan. It could come on at any time. Keep hands and other objects away from it.**

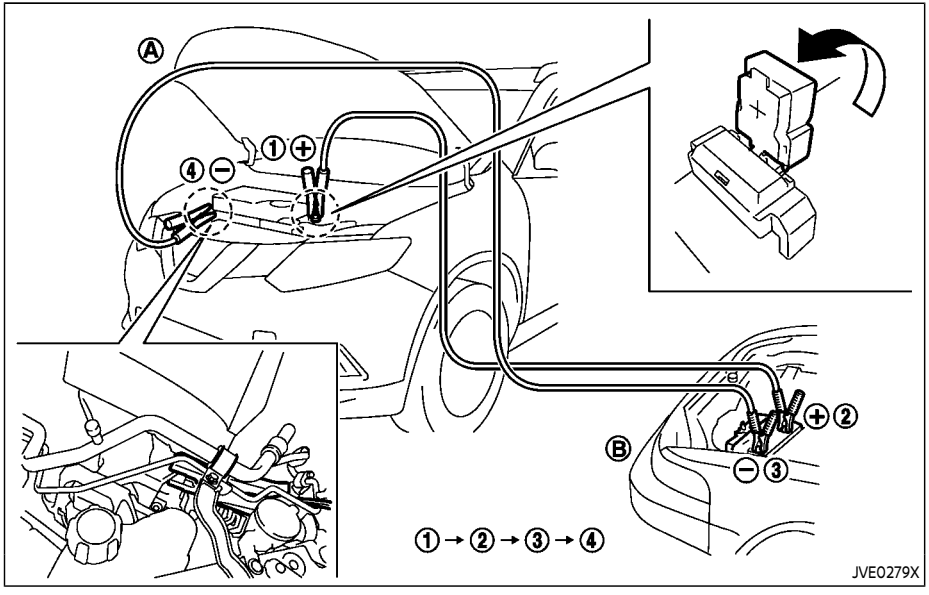

WARNING

Always follow the instructions below. Failure to do so could result in damage to the charging system and cause personal injury.

1. If the booster battery is in another vehicle Ⓑ, position the two vehicles (Ⓐ and Ⓑ) to bring their batteries into close proximity to each other.

   Do not allow the two vehicles to touch.

2. Apply the parking brake.
3. **Continuously Variable Transmission (CVT) models:**

   Move the shift lever to the P (Park) position.

   Manual Transmission (MT) models:

   Move the shift lever to the N (Neutral) position.
4. Switch off all unnecessary electrical systems (headlights, heater, air conditioner, etc.).
5. Remove the vent caps on the battery (if so equipped). Cover the battery with a firmly wrung out moist cloth to reduce explosion hazard.
6. Connect jumper cables in the sequence as illustrated (① → ② → ③ → ④).

CAUTION

- **Always connect positive (+) to positive (+) and negative (–) to body ground (for example, as illustrated), not to the battery.**
- **Make sure the jumper cables do not touch moving parts in the engine compartment and that the cable clamps do not contact**

any other metal.

7. Start the engine of the booster vehicle Ⓑ and let it run for a few minutes.
8. Keep the engine speed of the booster vehicle Ⓑ at about 2,000 rpm, and start the engine of the vehicle Ⓐ being jump started.

CAUTION

Do not keep the starter motor engaged for more than 10 seconds. If the engine does not start right away, place the ignition switch in the OFF position and wait 10 seconds before trying again.

9. After starting your engine, carefully disconnect the negative cable and then the positive cable (④ → ③ → ② → ①).
10. Replace the vent caps (if so equipped). Be sure to dispose of the cloth used to cover the vent holes as it may be contaminated with corrosive acid.

PUSH STARTING

Do not attempt to start the engine by pushing.

CAUTION

- **Continuously Variable Transmission (CVT) models cannot be push-started or tow-started. Attempting to do so may cause transmission damage.**
- **Three-way catalyst equipped models should not be started by pushing since the three way catalyst may be damaged.**
- **Never try to start the vehicle by towing it; when the engine starts, the forward surge could cause the vehicle to collide with the tow vehicle.**

IF YOUR VEHICLE OVERHEATS

WARNING

- **Never continue driving if your vehicle overheats. Doing so could cause a vehicle fire.**
- **Never open the hood if steam is coming out.**
- **Never remove the radiator or coolant reservoir cap while the engine is hot. If the radiator or coolant reservoir cap is removed when the engine is hot, pressurized hot water will spurt out and possibly cause burning, scalding or serious injury.**
- **If steam or coolant is coming from the engine, stand clear of the vehicle to prevent getting burned.**
- **The engine cooling fan will start at anytime when the coolant temperature exceeds preset degrees.**
- **Be careful not to allow your hands, hair, jewelry or clothing to come into contact with, or to get caught in the cooling fan or drive belts.**

If your vehicle is overheating (indicated by

an extremely high temperature gauge reading), or if you feel a lack of engine power, detect abnormal noise, etc., take the following steps:

1. Move the vehicle safely off the road and apply the parking brake.
2. **Continuously Variable Transmission (CVT) models:**

   Move the shift lever to the P (Park) position.

   Manual Transmission (MT) models:

   Move the shift lever to the N (Neutral) position.

   Do not stop the engine.
3. Turn off the air conditioner (if so equipped). Open all the windows, move the heater or air conditioner temperature control to maximum hot and fan control to high speed.
4. Get out of the vehicle. Look and listen for steam or coolant escaping from the radiator before opening the hood. (If steam or coolant is escaping, turn off the engine.) Do not open the hood further until no steam or coolant can be seen.
5. Open the engine hood.

WARNING

If steam or water is coming from the engine, stand clear to prevent getting burned.

6. Visually check the drive belt for damage or looseness. Also check if the cooling fan is running. The radiator hoses and radiator should not leak water. If coolant is leaking or the cooling fan does not run, stop the engine.

WARNING

Be careful not to allow your hands, hair, jewelry or clothing to come into contact with, or get caught in, engine belts or the engine cooling fan. The engine cooling fan can start at any time.

7. After the engine cools down, check the coolant level in the reservoir with the engine running. Add coolant to the reservoir if necessary. Have your vehicle repaired. It is recommended you visit a NISSAN dealer for this service.

TOWING YOUR VEHICLE

When towing your vehicle, all jurisdictional and local regulations for towing must be followed. Incorrect towing equipment could damage your vehicle. Towing instructions are available from a NISSAN dealer. Local service operators are generally familiar with the applicable laws and procedures for towing. To assure proper towing and to prevent accidental damage to your vehicle, NISSAN recommends that you have a service operator tow your vehicle. It is advisable to have the service operator carefully read the following precautions.

WARNING

- **Never ride in a vehicle that is being towed.**
- **Never get under your vehicle after it has been lifted by a tow truck.**

CAUTION

- **When towing, make sure that the transmission, axles, steering system and powertrain are in working condition. If any of these conditions apply, dollies or a flatbed tow truck must be used.**
- **Always attach safety chains before towing.**

For information about towing your vehicle behind a recreational vehicle (RV), see "Flat towing for All-Wheel Drive vehicle" (P.10-15) of this manual.

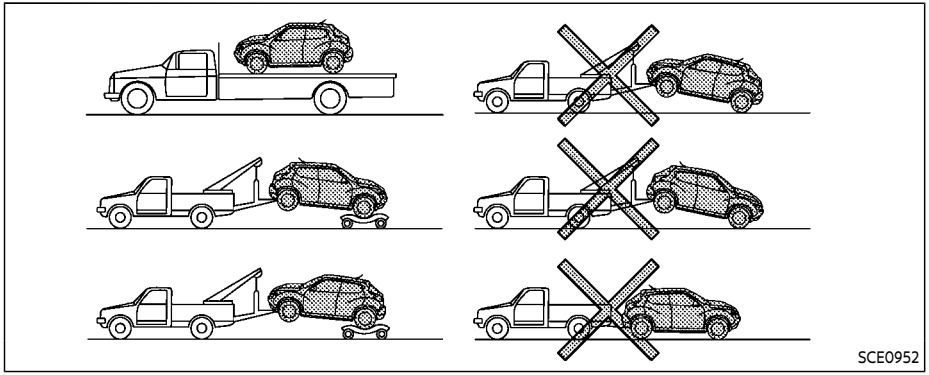

All-wheel drive models

TOWING RECOMMENDED BY NISSAN

All-Wheel Drive (AWD) models

NISSAN recommends that towing dollies be used when towing your vehicle or the vehicle be placed on a flat bed truck as illustrated.

CAUTION

Never tow AWD models with any of the wheels on the ground as this may cause serious and expensive damage to the powertrain.

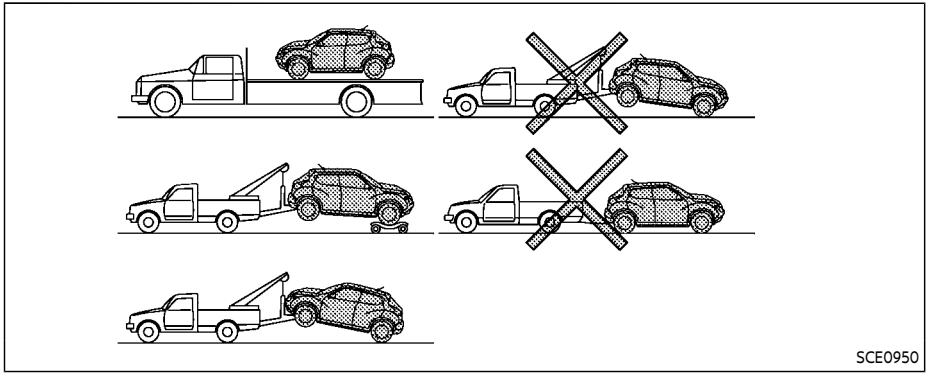

Two-wheel drive models

Two-Wheel Drive (2WD) models

NISSAN recommends that your vehicle be towed with the driving (front) wheels off the ground or place the vehicle on a flat bed truck as illustrated.

CAUTION

- **Never tow CVT models with the front wheels on the ground or four wheels on the ground (forward or backward), as this may cause serious and expensive damage to the transmission. If it is necessary to tow the vehicle with the rear wheels raised, always use towing dollies under the front wheels.**
- **When towing CVT models with the front wheels on towing dollies: Place the ignition switch in the OFF position, and secure the steering wheel in a straight-ahead position with a rope or similar device. Move the shift lever to the N (Neutral) position.**
- **When towing a CVT model with the rear wheels on the ground (if you do not use towing dollies): Always release the parking brake.**
- **When towing MT models with the front wheels on the ground: Place the ignition switch in the OFF position, and secure the steering wheel in a straight-ahead position with a rope or similar device. Move the shift lever to the N (Neutral) position.**
- **When towing MT models with the rear wheels on the ground (if you do not use towing dollies): Always release the parking brake.**

Front wheels on the ground:

NISSAN recommends that towing dollies be used under the front wheels when towing your vehicle or the vehicle be placed on a flatbed tow truck as illustrated.

CAUTION

Never tow Continuously Variable Transmission (CVT) model with the front wheels on the ground. Doing so will cause serious and expensive damage to the drivetrain.

Manual Transmission (MT) model:

1. Place the ignition switch in the OFF position.
2. Secure the steering wheel in a straight-ahead position with rope or a similar device.
3. Move the shift lever to the N (Neutral) position.
4. Release the parking brake.
5. Attach the safety chains whenever towing.

Rear wheels on the ground:

1. Place the ignition switch in the OFF position.
2. Move the shift lever to the N (Neutral) position.
3. Release the parking brake.
4. Attach safety chains whenever towing.

All four wheels on the ground:

NISSAN recommends that the vehicle be placed on a flatbed tow truck as illustrated.

CAUTION

Never tow CVT model with all four wheels on the ground. Doing so will cause serious and expensive damage to the drivetrain.

Manual Transmission (MT) model:

1. Place the ignition switch in the OFF position.
2. Move the shift lever to the N (Neutral) position.
3. Release the parking brake.

VEHICLE RECOVERY (freeing a stuck vehicle)

WARNING

To avoid vehicle damage, serious personal injury or death when recovering a stuck vehicle:

- **Contact a professional towing service to recover the vehicle if you have any questions regarding the recovery procedure.**
- **Tow chains or cables must be attached only to main structural members of the vehicle.**
- **Do not use the vehicle tie-downs to tow or free a stuck vehicle.**
- **Only use devices specifically designed for vehicle recovery and follow the manufacturer's instructions.**
- **Always pull the recovery device straight out from the front of the vehicle. Never pull at an angle.**
- **Route recovery devices so they do not touch any part of the vehicle except the attachment point.**

If your vehicle is stuck in sand, snow, mud, etc., use a tow strap or other device designed specifically for vehicle recovery. Always follow the manufacturer's instructions for the recovery device.

Rocking a stuck vehicle

WARNING

- **Stand clear of a stuck vehicle.**
- **Do not spin your tires at high speed. This could cause them to explode and result in serious injury. Parts of your vehicle could also overheat and be damaged.**

If your vehicle is stuck in sand, snow, mud, etc., use the following procedure:

1. Turn off the Vehicle Dynamic Control (VDC) system.
2. Make sure the area in front and behind the vehicle is clear of obstructions.
3. Turn the steering wheel right and left to clear an area around the front tires.
4. Slowly rock the vehicle forward and backward.
   - Shift back and forth between R (Reverse) and D (Drive) (Continuously Variable Transmission (CVT) models) or 1st and R (Reverse) (Manual Transmission (MT) models).
   - Apply the accelerator as little as possible to maintain the rocking motion.
   - Release the accelerator pedal before shifting between R and D (CVT models) or 1st and R (MT models).
   - Do not spin the tires above 35 MPH (55 km/h).
5. If the vehicle cannot be freed after a few tries, contact a professional towing service to remove the vehicle.

WARNING

- **Stand clear of a stuck vehicle.**
- **Do not spin your tires at high speed. This could cause them to explode and result in serious injury. Parts of your vehicle could also overheat and be damaged.**

MEMO

7 Appearance and care

Cleaning exterior 7-2
Washing 7-2
Waxing 7-2
Removing spots 7-3
Underbody 7-3
Glass 7-3
Wheels 7-3
Aluminum alloy wheels 7-3
Chrome parts 7-4
Tire dressing 7-4
Cleaning interior 7-4
Air fresheners 7-5
Floor mats 7-5
Seat belts 7-6
Cleaning the seat tracks 7-6
Corrosion protection 7-7
Most common factors contributing to vehicle corrosion 7-7
Environmental factors influence the rate of corrosion 7-7
To protect your vehicle from corrosion 7-7

CLEANING EXTERIOR

In order to maintain the appearance of your vehicle, it is important to take proper care of it.

To protect the paint surfaces, wash your vehicle as soon as you can:

- after a rainfall to prevent possible damage from acid rain
- after driving on coastal roads
- when contaminants such as soot, bird droppings, tree sap, metal particles or bugs get on the paint surface
- when dust or mud builds up on the surface

Whenever possible, store or park your vehicle inside a garage or in a covered area.

When it is necessary to park outside, park in a shady area or protect the vehicle with a body cover.

Be careful not to scratch the paint surface when putting on or removing the body cover.

WASHING

Wash dirt off the vehicle with a wet sponge and plenty of water. Clean the vehicle thoroughly using a mild soap, a special vehicle soap or general purpose dishwashing liquid mixed with clean, lukewarm (never hot) water.

CAUTION

- **Do not use car washes that use acid in the detergent. Some car washes, especially brushless ones, use some acid for cleaning. The acid may react with some plastic vehicle components, causing them to crack. This could affect their appearance, and also could cause them not to function properly. Always check with your car wash to confirm that acid is not used.**
- **Do not wash the vehicle with strong household soap, strong chemical detergents, gasoline or solvents.**
- **Do not wash the vehicle in direct sunlight or while the vehicle body is hot, as the surface may become water-spotted.**
- **Avoid using tight-napped or rough cloths, such as washing mitts. Care must be taken when removing caked-on dirt or other foreign substances so the paint surface is not scratched or damaged.**

Rinse the vehicle thoroughly with plenty of clean water.

Inside flanges, seams and folds on the doors, hatches and hood are particularly vulnerable to the effects of road salt. Therefore, these areas must be regularly cleaned. Make sure that the drain holes in the lower edge of the door are open. Spray water under the body and in the wheel wells to loosen the dirt and wash away road salt.

Avoid leaving water spots on the paint surface by using a damp chamois to dry the vehicle.

WAXING

Regular waxing protects the paint surface and helps retain new vehicle appearance. Polishing is recommended to remove built-up wax residue and to avoid a weathered appearance before reapplying wax.

A NISSAN dealer can assist you in choosing the proper product.

- Wax your vehicle only after a thorough washing. Follow the instructions supplied with the wax.
- Do not use a wax containing any abrasives, cutting compounds or cleaners that may damage the vehicle finish.

Machine compound or aggressive polish-

ing on a base coat/clear coat paint finish may dull the finish or leave swirl marks.

REMOVING SPOTS

Remove tar and oil spots, industrial dust, insects, and tree sap as quickly as possible from the paint surface to avoid lasting damage or staining. Special cleaning products are available at a NISSAN dealer or any automotive accessory stores. It is recommended that you visit a NISSAN dealer for these products.

UNDERBODY

In areas where road salt is used in winter, the underbody must be cleaned regularly. This will prevent dirt and salt from building up and causing the acceleration of corrosion on the underbody and suspension. Before the winter period and again in the spring, the underseal must be checked and, if necessary, re-treated.

GLASS

Use glass cleaner to remove smoke and dust film from the glass surfaces. It is normal for glass to become coated with a film after the vehicle is parked in the hot sun. Glass cleaner and a soft cloth will easily remove this film.

CAUTION

When cleaning the inside of the windows, do not use sharp-edged tools, abrasive cleaners or chlorine-based disinfectant cleaners. They could damage the electrical conductors, radio antenna elements or rear window defroster elements.

WHEELS

Wash the wheels when washing the vehicle to maintain their appearance.

- Clean the inner side of the wheels when the wheel is changed or the underside of the vehicle is washed.
- Inspect wheel rims regularly for dents or corrosion. Such damage may cause loss of pressure or poor seal at the tire bead.
- NISSAN recommends that the road wheels be waxed to protect against road salt in areas where it is used during winter.

CAUTION

Do not use abrasive cleaners when washing the wheels.

ALUMINUM ALLOY WHEELS

Wash regularly with a sponge dampened in a mild soap solution, especially during winter months in areas where road salt is used. Salt could discolor the wheels if not removed.

CAUTION

Follow the directions below to avoid staining or discoloring the wheels:

- **Do not use a cleaner that uses strong acid or alkali contents to clean the wheels.**
- **Do not apply wheel cleaners to the wheels when they are hot. The wheel temperature should be the same as ambient temperature.**
- **Rinse the wheel to completely remove the cleaner within 15 minutes after the cleaner is applied.**

CHROME PARTS

Clean chrome parts regularly with a non-abrasive chrome polish to maintain the finish.

TIRE DRESSING

NISSAN does not recommend the use of tire dressings. Tire manufacturers apply a coating to the tires to help reduce discoloration of the rubber. If a tire dressing is applied to the tires, it may react with the coating and form a compound. This compound may come off the tire while driving and stain the vehicle paint.

If you choose to use a tire dressing, take the following precautions:

- Use a water-based tire dressing. The coating on the tire dissolves more easily with an oil-based tire dressing.
- Apply a light coat of tire dressing to help prevent it from entering the tire tread/grooves (where it would be difficult to remove).
- Wipe off excess tire dressing using a dry towel. Make sure the tire dressing is completely removed from the tire tread/grooves.
- Allow the tire dressing to dry as recommended by tire dressing manufacturer.

Occasionally remove loose dust from the interior trim, plastic parts and seats using a vacuum cleaner or soft bristled brush. Wipe the vinyl and leather surfaces with a clean, soft cloth dampened in mild soap solution, then wipe clean with a dry soft cloth.

Regular care and cleaning is required in order to maintain the appearance of the leather.

Before using any fabric protector, read the manufacturer's recommendations. Some fabric protectors contain chemicals that may stain or bleach the seat material.

Use a cloth dampened only with water, to clean the meter and gauge lens.

WARNING

Do not use water or acidic cleaners (hot steam cleaners) on the seat. This can damage the seat or occupant classification sensors. This can also affect the operation of the air bag system and result in serious personal injury.

CAUTION

- **Never use benzine, thinner, or any similar material.**
- **For cleaning, use a soft cloth, dampened with water. Never use a rough cloth, alcohol, benzine, thinner or any kind of solvent or paper towel with a chemical cleaning agent. They will scratch or cause discoloration to the lens.**
- **Do not spray any liquid such as water on the meter lens. Spraying liquid may cause the system to malfunction.**
- **Small dirt particles can be abrasive and damaging to the leather surfaces and should be removed promptly. Do not use saddle soap, car waxes, polishes, oils, cleaning fluids, solvents, detergents or ammonia-based cleaners as they may damage the leather's natural finish.**
- **Never use fabric protectors unless recommended by the manufacturer.**
- **Do not use glass or plastic cleaner on meter or gauge lens covers. It**

may damage the lens cover.

AIR FRESHENERS

Most air fresheners use a solvent that could affect the vehicle interior. If you use an air freshener, take the following precautions:

- Hanging-type air fresheners can cause permanent discoloration when they contact vehicle interior surfaces. Place the air freshener in a location that allows it to hang free and not contact an interior surface.
- Liquid-type air fresheners typically clip on the vents. These products can cause immediate damage and discoloration when spilled on interior surfaces.

Carefully read and follow the manufacturer's instructions before using air fresheners.

FLOOR MATS

WARNING

To avoid potential pedal interference that may result in a collision, injury or death:

- **NEVER place a floor mat on top of another floor mat in the driver front position or install them upside down or backwards.**
- **It is recommended that you use only genuine NISSAN floor mats specifically designed for use in your vehicle model and model year.**
- **Properly position the mats in the floorwell using the floor mat positioning hooks. See "Floor mat installation" (P.7-5).**
- **Make sure the floor mat does not interfere with pedal operation.**
- **Periodically check the floor mats to make sure they are properly installed.**
- **After cleaning the vehicle interior, check the floor mats to make sure they are properly installed.**

The use of genuine NISSAN floor mats can extend the life of your vehicle carpet and make it easier to clean the interior. Mats should be maintained with regular cleaning and replaced if they become excessively worn.

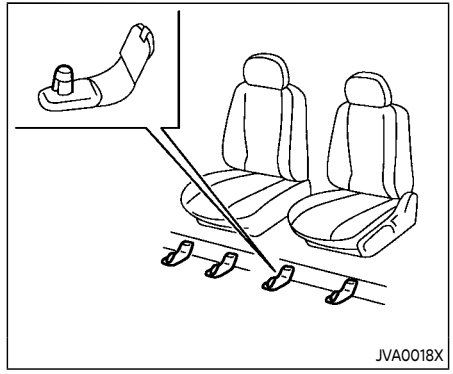

Floor mat installation

Your vehicle is equipped with floor mat positioning hook(s). The number and shape of the floor mat positioning hook (s) for each seating position varies depending on the vehicle.

When installing genuine NISSAN floor mats, follow the installation instructions provided with the floor mat and the following:

1. Position the floor mat in the floorwell so that the floor mat grommet holes are aligned with the hook(s).
2. Secure the grommet holes into the hook(s) and ensure that the floor mat

is properly positioned.

3. Make sure the floor mat does not interfere with pedal operation. With the ignition in the OFF position and the shift lever in the P (Park) position (Continuously Variable Transmission (CVT) models) or the shift lever in the N (Neutral) position (Manual Transmission (MT) models), fully apply and release all pedals. The floor mat must not interfere with pedal operation or prevent the pedal from returning to its normal position. It is recommended you see a NISSAN dealer for details about installing the floor mats in your vehicle.

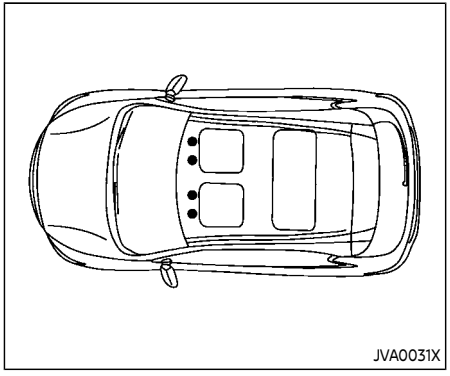

Positioning hook(s)

The illustration shows the location of the floor mat positioning hook(s).

SEAT BELTS

The seat belts can be cleaned by wiping them with a sponge dampened in a mild soap solution. Allow the belts to dry completely in the shade before using them.

See "Seat belts" (P.1-10).

WARNING

Do not allow wet seat belts to roll up in the retractor. NEVER use bleach, dye, or chemical solvents to clean the seat belts, since these materials may severely weaken the seat belt webbing.

CLEANING THE SEAT TRACKS

CAUTION

Periodically clean the seat tracks to prevent reduction of ability to move the seats.

Clean periodically with a high-powered vacuum cleaner. Dirt and debris may reduce the ability to adjust the seat. A wet cleansing agent may be used if necessary.

MOST COMMON FACTORS CONTRIBUTING TO VEHICLE CORROSION

- The accumulation of moisture-retaining dirt and debris in body panel sections, cavities, and other areas.
- Damage to paint and other protective coatings caused by gravel and stone chips or minor traffic accidents.

ENVIRONMENTAL FACTORS INFLUENCE THE RATE OF CORROSION

Moisture

Accumulation of sand, dirt and water on the vehicle body underside can accelerate corrosion. Wet floor coverings will not dry completely inside the vehicle, and should be removed for drying to avoid floor panel corrosion.

Relative humidity

Corrosion will be accelerated in areas of high relative humidity, especially those areas where the temperatures stay above freezing where atmospheric pollution exists, or where road salt is used.

Temperature

A temperature increase will accelerate the rate of corrosion to those parts which are not well ventilated.

Air pollution

Industrial pollution, the presence of salt in the air in coastal areas, or heavy road salt use will accelerate the corrosion process. Road salt will also accelerate the disintegration of paint surfaces.

TO PROTECT YOUR VEHICLE FROM CORROSION

- Wash and wax your vehicle often to keep the vehicle clean.
- Always check for minor damage to the paint and repair it as soon as possible.
- Keep drain holes at the bottom of the doors open to avoid water accumulation.
- Check the underbody for accumulation of sand, dirt or salt. If present, wash with water as soon as possible.

CAUTION

- **NEVER remove dirt, sand or other debris from the passenger compartment by washing it out with a hose. Remove dirt with a vacuum cleaner.**
- **Never allow water or other liquids to come in contact with electronic components inside the vehicle as this may damage them.**

Chemicals used for road surface deicing are extremely corrosive. They accelerate corrosion and deterioration of underbody components such as the exhaust system, fuel and brake lines, brake cables, floor pan and fenders.

In winter, the underbody must be cleaned periodically.

For additional protection against rust and corrosion, which may be required in some areas, it is recommended you consult a NISSAN dealer.

MEMO

8 Do-it-yourself

Maintenance precautions 8-2
Engine compartment check locations 8-3
MR20DD engine model 8-4
Engine cooling system 8-4
Checking engine coolant level 8-5
Changing engine coolant 8-6
Engine oil 8-6
Checking engine oil level 8-6
Changing engine oil and filter 8-6
Continuously Variable Transmission (CVT) fluid 8-9
Brake and clutch (if so equipped) fluid 8-9
Window washer fluid 8-10
Battery 8-11
Jump starting 8-12
Variable voltage control system 8-13
Drive belt 8-13
Spark plugs 8-14
Replacing spark plugs 8-14
Air cleaner 8-15
Windshield wiper blades 8-16
Cleaning 8-16
Replacing 8-16
Rear window wiper blade 8-17
Brakes 8-17
Self-adjusting brakes 8-17
Brake pad wear warning 8-17
Fuses 8-18
Engine compartment 8-18
Passenger compartment 8-20
Key fob battery replacement 8-21
Intelligent Key battery replacement 8-23
Lights 8-25
Headlights 8-25
Exterior and interior lights 8-27
Wheels and tires 8-29
Tire pressure 8-29
Tire labeling 8-33
Types of tires 8-35
Tire chains 8-36
Changing wheels and tires 8-37

MAINTENANCE PRECAUTIONS

When performing any inspection or maintenance work on your vehicle, always take care to prevent serious accidental injury to yourself or damage to the vehicle. The following are general precautions which should be closely observed.

WARNING

- **Park the vehicle on a level surface, apply the parking brake securely and block the wheels to prevent the vehicle from moving. Move the shift lever to the P (Park) position (CVT model) or the shift lever to the N (Neutral) position (MT model).**
- **Be sure the ignition switch is in the OFF or LOCK position when performing any parts replacement or repairs.**
- **If you must work with the engine running, keep your hands, clothing, hair and tools away from moving fans, belts and any other moving parts.**
- **It is advisable to secure or remove any loose clothing and remove any jewelry, such as rings, watches, etc. before working on your vehicle.**
- **Always wear eye protection whenever you work on your vehicle.**
- **If you must run the engine in an enclosed space such as a garage, be sure there is proper ventilation for exhaust gases to escape.**
- **Never get under the vehicle while it is supported only by a jack. If it is necessary to work under the vehicle, support it with safety stands.**
- **Because the fuel lines are under high pressure even when the engine is off, it is recommended you visit a NISSAN dealer for service of the fuel filter or fuel lines.**
- **Do not work under the hood while the engine is hot. Always turn off the engine and wait until it cools down.**
- **If you must work with the engine running, keep your hands, clothing, hair and tools away from moving fans, belts and any other moving parts.**
- **Keep smoking materials, flame and sparks away from fuel and the battery.**
- **On gasoline engine models with the Multiport Fuel Injection (MFI) system, the fuel filter and fuel lines should be serviced because the fuel lines are under high pressure even when the engine is turned off. It is recommended that you visit a NISSAN dealer for this service.**
- **Your vehicle is equipped with an automatic engine cooling fan. It may come on at any time without warning, even if the ignition switch is in the OFF position and the engine is not running. To avoid injury, always disconnect the negative battery cable before working near the fan.**
- **Avoid direct contact with used engine oil and coolant. Improperly disposed engine oil, engine coolant, and/or other vehicle fluids can hurt the environment. Always conform to local regulations for disposal of vehicle fluids.**

CAUTION

- **Do not work under the hood while the engine is hot. Turn the engine**

off and wait until it cools down.

- **Avoid direct contact with used engine oil and coolant. Improperly disposed engine oil, and engine coolant and/or other vehicle fluids can damage the environment. Always conform to local regulations for disposal of vehicle fluid.**
- **Never leave the engine or the CVT related component harnesses disconnected while the ignition switch is in the ON position.**
- **Never connect or disconnect the battery or any transistorized component while the ignition switch is in the ON position.**
- **Your vehicle is equipped with an automatic engine cooling fan. It may come on at any time without warning, even if the ignition key is in the OFF position and the engine is not running. To avoid injury, always disconnect the negative battery cable before working near the fan.**

This "8. Do-it-yourself" section gives instructions regarding only those items which are relatively easy for an owner to perform.

A genuine NISSAN Service Manual is also available. (See "Owner's manual/service manual order information" (P.10-19).)

You should be aware that incomplete or improper servicing may result in operating difficulties or excessive emissions, and could affect your warranty coverage. **If in doubt about any servicing, it is recommended you have it done by a NISSAN dealer.**

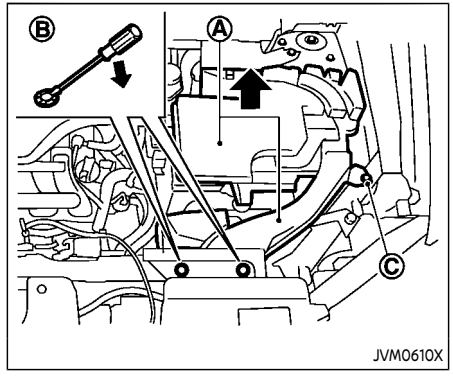

Remove the air duct if necessary.

To remove the air duct Ⓐ:

1. Remove the clips Ⓑ with a suitable tool.
2. Loosen the bolt Ⓒ with a suitable tool.
3. Pull the air duct upward and then sideways.

To install the air duct, perform the installation procedure in reverse order.

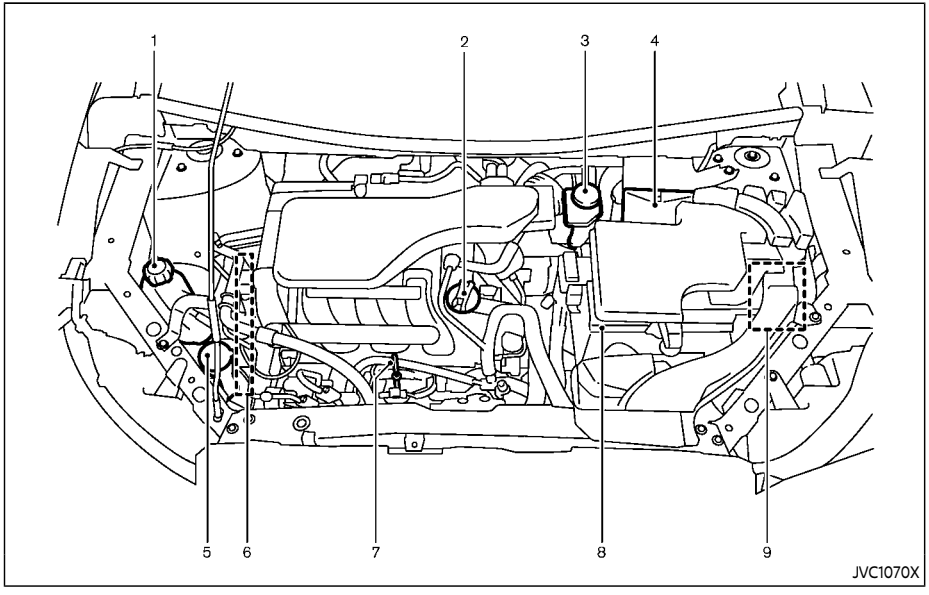

MR20DD ENGINE MODEL

1. Engine coolant reservoir
2. Engine oil filler cap
3. Brake and clutch* fluid reservoir
4. Air cleaner
5. Window washer fluid reservoir
6. Drive belt
7. Engine oil dipstick
8. Battery
9. Fuse/fusible link box

*: For Manual Transmission (MT) Model

The engine cooling system is filled at the factory with a pre-diluted mixture of 50% Genuine NISSAN Long Life Antifreeze/ Coolant (blue) and 50% water to provide year-round anti-freeze and coolant protection. The anti-freeze solution contains rust and corrosion inhibitors. Additional engine cooling system additives are not necessary.

WARNING

- **Never remove the radiator or coolant reservoir cap when the engine is hot. Wait until the engine and radiator cool down. Serious burns could be caused by high pressure fluid escaping from the radiator. See precautions in "If your vehicle overheats" (P.6-11) of this manual.**
- **The radiator is equipped with a pressure type radiator cap. To prevent engine damage, use only a genuine NISSAN radiator cap.**
- **If the engine was stopped soon when the engine is hot, the cooling fan may operate for approximately 10 minutes after the engine was stopped to cool the components in the engine com-**

partment. When the cooling fan is operating, be sure that hands or other items do not get caught in it.

CAUTION

- **Never use any cooling system additives such as radiator sealer. Additives may clog the cooling system and cause damage to the engine, transmission and/or cooling system.**
- **When adding or replacing coolant, be sure to use only Genuine NISSAN Long Life Antifreeze/Coolant (blue) or equivalent. Genuine NISSAN Long Life Antifreeze/Coolant (blue) is pre-diluted to provide antifreeze protection to -34°F(-37°C). If additional freeze protection is needed due to weather where you operate your vehicle, add Genuine NISSAN Long Life Antifreeze/Coolant (blue) concentrate following the directions on the container. If an equivalent coolant other than Genuine NISSAN Long Life Antifreeze/Coolant (blue) is used, follow the coolant manufacture's instructions to maintain minimum antifreeze protection to -34°F (-37°C). The use of other types of coolant solutions other than Genuine NISSAN Long Life Antifreeze/Coolant (blue) or equivalent may damage the engine cooling system.**
- **The life expectancy of the factory-fill coolant is 105,000 miles (168,000 km) or 7 years. Mixing any other type of coolant other than Genuine NISSAN Long Life Antifreeze/Coolant (blue), including Genuine NISSAN Long Life Antifreeze/Coolant (green), or the use of non-distilled water will reduce the life expectancy of the factory-fill coolant. Refer to the "9. Maintenance and schedules" section of this manual for more details.**

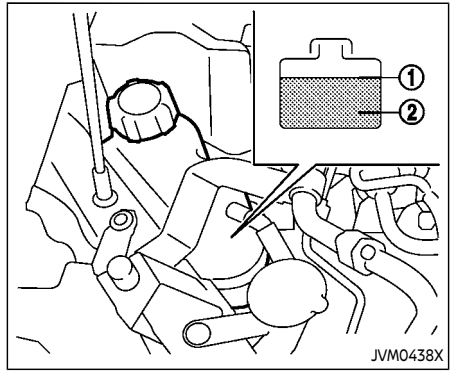

CHECKING ENGINE COOLANT LEVEL

Check the coolant level **in the reservoir when the engine is cold.** If the coolant level is below the MIN level ②, open the reservoir cap and add coolant up to the MAX level ①. If the reservoir is empty, check the coolant level in the radiator **when the engine is cold.** If there is insufficient coolant in the radiator, fill the radiator with coolant up to the filler opening and also add it to the reservoir up to the MAX level ①.

Tighten the cap securely after adding engine coolant.

If the cooling system frequently requires coolant, have it checked. It is

recommended you visit a NISSAN dealer for this service.

CHANGING ENGINE COOLANT

A NISSAN dealer can change the engine coolant. The service procedure can be found in the NISSAN Service Manual.

Improper servicing can result in reduced heater performance and engine overheating.

WARNING

- **To avoid being scalded, never change the coolant when the engine is hot.**
- **Never remove the radiator or coolant reservoir cap when the engine is hot. Serious burns could be caused by high pressure fluid escaping from the radiator.**
- **Avoid direct skin contact with used coolant. If skin contact is made, wash thoroughly with soap or hand cleaner as soon as possible.**
- **Keep coolant out of the reach of children and pets.**

Engine coolant must be disposed of properly. Check your local regulations.

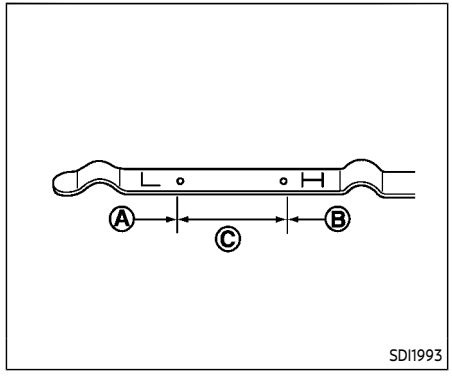

CHECKING ENGINE OIL LEVEL

1. Park the vehicle on a level surface and apply the parking brake.
2. Run the engine until it reaches operating temperature.
3. Turn off the engine. **Wait more than 10 minutes for the oil to drain back into the oil pan.**
4. Remove the dipstick and wipe it clean. Reinsert it all the way.
5. Remove the dipstick again and check the oil level. It should be within the range Ⓒ. If the oil level is below Ⓐ, remove the oil filler cap and pour recommended oil through the opening. **Do not overfill Ⓑ.**
6. Recheck oil level with the dipstick.

It is normal to add some oil between oil maintenance intervals or during the break-in period, depending on the severity of operating conditions.

CAUTION

Oil level should be checked regularly. Operating the engine with an insufficient amount of oil can damage the engine, and such damage is not covered by the warranty.

CHANGING ENGINE OIL AND FILTER

WARNING

- **Used oil must be disposed of properly. Never pour or dump oil into the ground, canals, rivers, etc. It should be disposed of at proper waste facilities. NISSAN recommends having your oil changed by a NISSAN dealer.**
- **Be careful not to burn yourself, as the engine oil may be hot.**

- **Prolonged and repeated contact with used engine oil may cause skin cancer.**
- **Avoid direct skin contact with used oil. If contacted, wash thoroughly with soap or hand cleaner and plenty of water as soon as possible.**
- **Store used engine oil in marked containers out of the reach of children.**

Vehicle set-up

1. Park the vehicle on a level surface and apply the parking brake.
2. Run the engine until it reaches the operating temperature.
3. Turn the engine off and wait more than 10 minutes.
4. Raise and support the vehicle using a suitable floor jack and safety jack stands.
   - Place the safety jack stands under the vehicle jack-up points.
   - A suitable adapter should be attached to the jack stand saddle.

CAUTION

Make sure the correct lifting and support points are used to avoid vehicle damage.

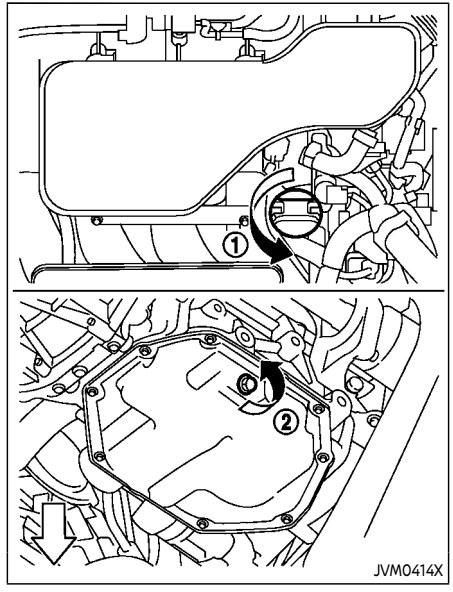

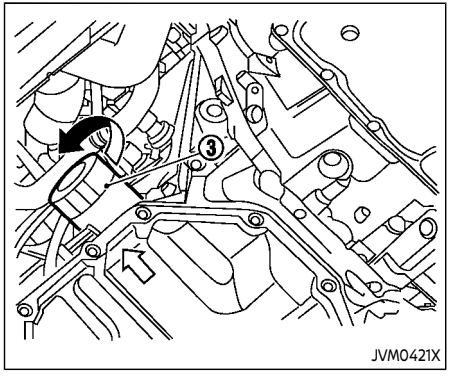

1. Oil filler cap
2. Oil drain plug
3. Oil filter

Engine oil and filter

1. Place a large drain pan under the drain plug.
2. Remove the oil filler cap.
3. Remove the drain plug with a wrench and completely drain the oil.

CAUTION

Be careful not to burn yourself, as the engine oil is hot.

- **Waste oil must be disposed of properly.**
- **Check your local regulations.**

(Perform steps 4 to 7 only when the engine oil filter change is needed.)

4. Loosen the oil filter with an oil filter wrench. Remove the oil filter by turning it by hand.
5. Wipe the engine oil filter mounting surface with a clean rag.

CAUTION

Be sure to remove any old gasket material remaining on the mounting surface of the engine. Failure to do so could lead to engine damage.

6. Coat the gasket on the new filter with clean engine oil.
7. Screw in the oil filter clockwise until a slight resistance is felt, then tighten additionally more than 2/3 turn.

   Oil filter tightening torque:
   11 to 15 ft-lb
   (14.7 to 20.5 N·m)

8. Clean and re-install the drain plug with a new washer. Securely tighten the drain plug with a wrench.

   Drain plug tightening torque:
   22 to 29 ft-lb
   (29 to 39 N·m)

   Do not use excessive force.

9. Refill the engine with the recommended oil through the oil filler opening, and install the oil filler cap securely.

   See "Capacities and recommended fluids/lubricants" (P.10-2) for drain and refill capacity. The drain and refill capacity depends on the oil temperature and drain time. Use these specifications for reference only. Always use the dipstick to determine the proper amount of oil in the engine.

10. Start the engine and check for leakage around the drain plug and the oil filter. Correct as required.
11. Turn the engine off and wait more than 10 minutes. Check the oil level with the dipstick. Add engine oil if necessary.

After the operation

1. Lower the vehicle carefully to the ground.
2. Dispose of waste oil and filter properly.

WARNING

- **Prolonged and repeated contact with used engine oil may cause skin cancer.**
- **Try to avoid direct skin contact with used oil. If skin contact is made, wash thoroughly with soap or hand cleaner as soon as possible.**
- **Keep used engine oil out of reach of children.**

CONTINUOUSLY VARIABLE TRANSMISSION (CVT) FLUID

When checking or replacement is required, we recommend a NISSAN dealer for servicing.

CAUTION

- **NISSAN recommends using Genuine NISSAN CVT Fluid NS-3 (or equivalent) ONLY in NISSAN CVTs. Do not mix with other fluids.**
- **Do not use Automatic transmission fluid (ATF) or Manual Transmission fluid in a NISSAN CVT, as it may damage the CVT. Damage caused by the use of fluids other than as recommended is not covered by the NISSAN's New Vehicle Limited Warranty.**
- **Using fluids that are not equivalent to Genuine NISSAN CVT Fluid NS-3 may also damage the CVT. Damage caused by the use of fluids other than as recommended is not covered by the NISSAN's New Vehicle Limited Warranty.**

BRAKE AND CLUTCH (if so equipped) FLUID

For additional brake and clutch fluid information, see "Capacities and recommended fluids/lubricants" (P.10-2) of this manual.

WARNING

- **Use only new fluid from a sealed container. Old, inferior or contaminated fluid may damage the brake and clutch systems. The use of improper fluids can damage the brake and clutch systems, and affect the vehicle's stopping ability.**
- **Clean the filler cap before removing.**
- **Brake and clutch fluid is poisonous and should be stored carefully in marked containers out of the reach of children.**

CAUTION

Do not spill the fluid on any painted surfaces. This will damage the paint. If fluid is spilled, immediately wash the surface with water.

WINDOW WASHER FLUID

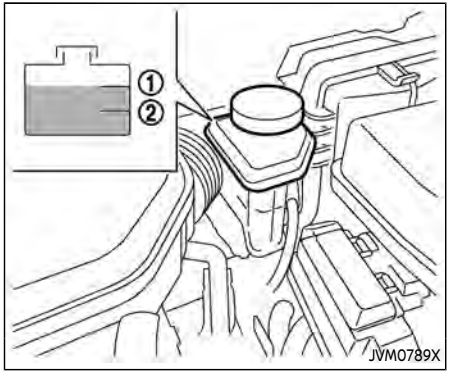

Check the fluid level in the reservoir. If the fluid is below the MIN line ② or the brake warning light comes on, add Genuine NISSAN Super Heavy Duty Brake Fluid or equivalent **DOT 3** fluid up to the MAX line ①. If fluid must be added frequently, the system should be checked. It is recommended you visit a NISSAN dealer for this service.

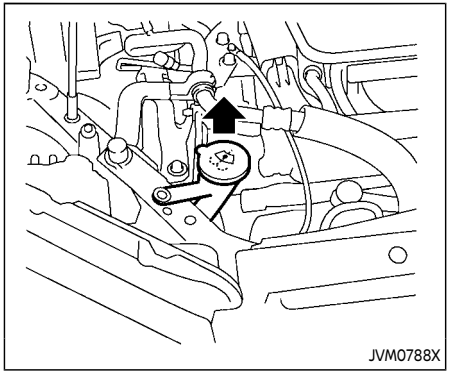

Type A

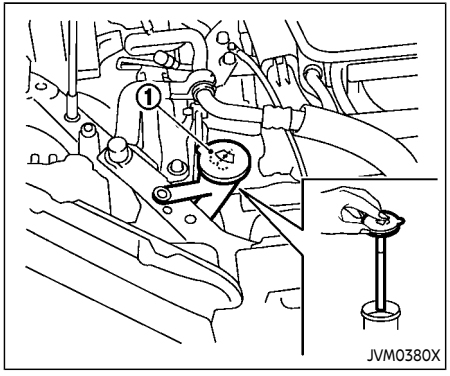

Type B

Type A: Check the fluid level in the window washer reservoir. If the fluid level is low, add window washer fluid.

Type B: To check the fluid level, use your finger to plug the center hole ① of the cap/tube assembly, then remove it from the reservoir. If there is no fluid in the tube, add fluid.

Add a washer solvent to the washer for better cleaning. In the winter season, add a windshield washer antifreeze. Follow the manufacturer's instructions for the mixture ratio.

Fill the window washer fluid reservoir periodically.

Add fluid when the low washer fluid warning appears (if so equipped).

Refill the reservoir more frequently when driving conditions require an increased amount of window washer fluid.

Recommended fluid:

Genuine NISSAN Windshield Washer Concentrate Cleaner & Antifreeze or equivalent

CAUTION

- **Do not substitute engine antifreeze coolant for window washer solution. This may result**

in damage to the paint.

- **Do not fill the window washer reservoir tank with washer fluid concentrates at full strength. Some methyl alcohol based washer fluid concentrates may permanently stain the grille if spilled while filling the window washer reservoir tank.**
- **Pre-mix washer fluid concentrates with water to the manufacturer's recommended levels before pouring the fluid into the window washer reservoir tank. Do not use the window washer reservoir tank to mix the washer fluid concentrate and water.**

- Keep the battery surface clean and dry. Clean the battery with a solution of baking soda and water.
- Make certain the terminal connections are clean and securely tightened.
- If the vehicle is not to be used for 30 days or longer, disconnect the negative ⊖ battery terminal cable to prevent discharging it.

NOTE:

Care should be taken to avoid situations that can lead to potential battery discharge and potential no-start conditions such as:

1. **Installation or extended use of electronic accessories that consume battery power when the engine is not running (Phone chargers, GPS, DVD players, etc.)**
2. **Vehicle is not driven regularly and/or only driven short distances.**

In these cases, the battery may need to be charged to maintain battery health.

WARNING

- **Do not expose the battery to flames or electrical sparks. Hydrogen gas generated by the battery is explosive. Do not allow battery fluid to contact your skin, eyes, fabrics or painted surfaces. After touching a battery or battery cap, do not touch or rub your eyes. Thoroughly wash your hands. If the acid contacts your eyes, skin or clothing, immediately flush with water for at least 15 minutes and seek medical attention.**
- **Do not operate the vehicle if the fluid in the battery is low. Low battery fluid can cause a higher load on the battery which can generate heat, reduce battery life, and in some cases lead to an explosion.**
- **When working on or near a battery, always wear suitable eye protection and remove all jewelry.**
- **Battery posts, terminals and related accessories contain lead and lead compounds. Wash hands after handling.**
- **Keep the battery out of the reach of children.**

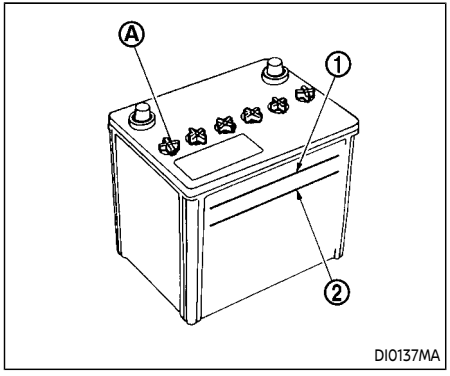

Check the fluid level in each cell. It should be between the UPPER LEVEL ① and LOWER LEVEL ② lines.

If it is necessary to add fluid, add only distilled water to bring the level to the indicator in each filler opening. **Do not overfill.**

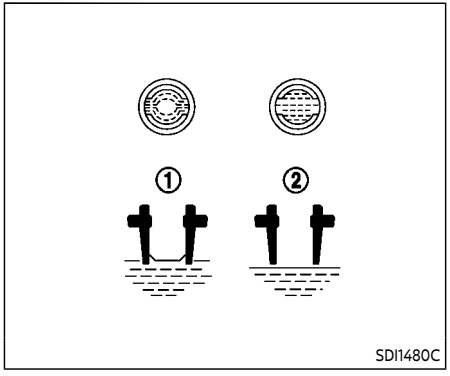

1. Remove the cell plugs Ⓐ.
2. Add distilled water up to the UPPER LEVEL ① line.

   If the side of the battery is not clear, check the distilled water level by looking directly above the cell; the condition ① indicates OK and the condition ② needs more to be added.
3. Tighten cell plugs Ⓐ.

Vehicles operated in high temperatures or under severe conditions require frequent checks of the battery fluid level.

JUMP STARTING

If jump starting is necessary, see “Jump starting” (P.6-9). If the engine does not start by jump starting, the battery may have to be replaced. It is recommended you visit a NISSAN dealer for this service.

VARIABLE VOLTAGE CONTROL SYSTEM

CAUTION

- **Do not ground accessories directly to the battery terminal. Doing so will bypass the variable voltage control system and the vehicle battery may not charge completely.**
- **Use electrical accessories with the engine running to avoid discharging the vehicle battery.**

The variable voltage control system measures the amount of electrical discharge from the battery and controls voltage generated by the generator.

DRIVE BELT

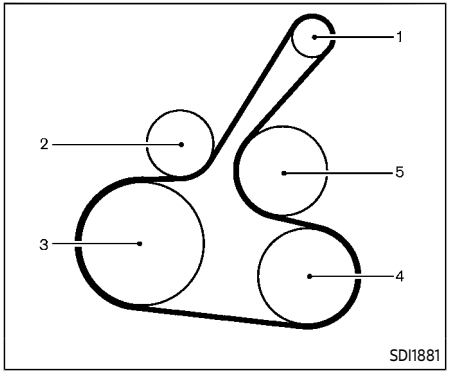

1. Alternator
2. Drive belt auto-tensioner
3. Crankshaft pulley
4. Air conditioner compressor
5. Water pump

WARNING

Be sure the ignition switch is in the OFF or LOCK position before servicing drive belts. The engine could rotate unexpectedly.

1. Visually inspect the belt for signs of unusual wear, cuts, fraying or looseness. If the belt is in poor condition or loose, have it replaced or adjusted. It is recommended you visit a NISSAN dealer for this service.
2. Have the belt condition checked regularly.

WARNING

Be sure the engine and ignition switch are off and that the parking brake is applied.

CAUTION

Be sure to use the correct socket to remove the spark plugs. An incorrect socket can damage the spark plugs.

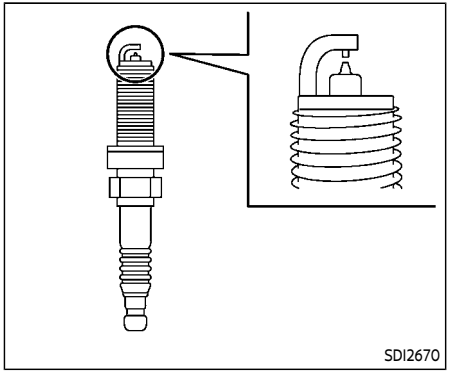

REPLACING SPARK PLUGS

If replacement is required, it is recommended you visit a NISSAN dealer for this service.

Iridium platinum-tipped spark plugs

It is not necessary to replace the iridium platinum-tipped spark plugs as frequently as the conventional type spark plugs since they will last much longer. Follow the maintenance schedule shown in the "9. Maintenance and schedules" section. Do not reuse the iridium platinum-tipped spark plugs by cleaning or regapping.

Always replace spark plugs with recommended or equivalent ones.

AIR CLEANER

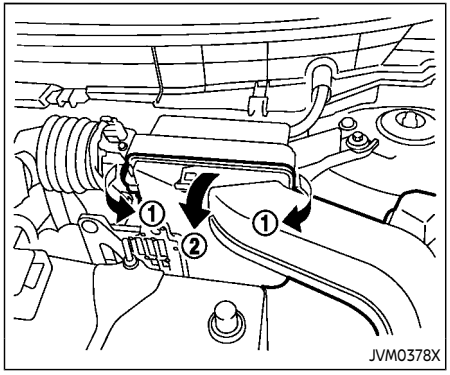

Example

To remove the filter, unlatch the retaining clips ①, and pull the cover ② upward.

The air cleaner filter should not be cleaned and reused. Replace it according to the maintenance schedule shown in the "9. Maintenance and schedules" section. When replacing the filter, wipe the inside of the air cleaner housing and the cover with a damp cloth.

WARNING

- **Operating the engine with the air cleaner filter off can cause you or others to be burned. The air cleaner filter not only cleans the intake air, it also stops flame if the engine backfires. If the air cleaner filter is not installed and the engine backfires, you could be burned. Never drive with the air cleaner filter off. Be cautious working on the engine when the air cleaner filter is off.**
- **Never pour fuel into the throttle body or attempt to start the engine with the air cleaner removed. Doing so could result in serious injury.**

CLEANING

If your windshield is not clear after using the windshield washer or if a wiper blade chatters when running, wax or other material may be on the blade or windshield.

Clean the outside of the windshield with a washer solution or a mild detergent. Your windshield is clean if beads do not form when rinsing with clear water.

Clean each blade by wiping it with a cloth soaked in a washer solution or a mild detergent. Then rinse the blade with clear water. If your windshield is still not clear after cleaning the blades and using the wiper, replace the blades.

CAUTION

Worn windshield wiper blades can damage the windshield and impair driver vision.

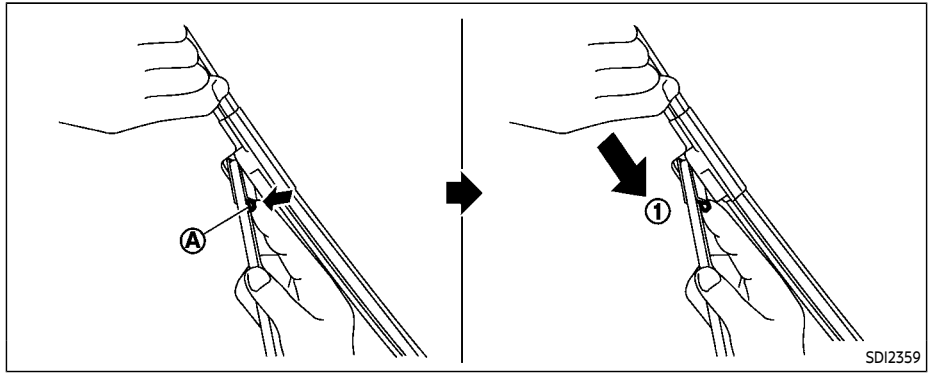

REPLACING

Replace the wiper blades if they are worn.

1. Lift the wiper arm away from the windshield.
2. Push and hold the release tab Ⓐ, and move the wiper blade down the wiper arm ①.
3. Insert the new wiper blade onto the wiper arm until a click sounds.
4. Rotate the wiper blade so that the dimple is in the groove.

CAUTION

- **After wiper blade replacement, return the wiper arm to its original position; otherwise it may be damaged when the hood is opened.**
- **Make sure the wiper blades contact the glass; otherwise the arm may be damaged from wind pressure.**

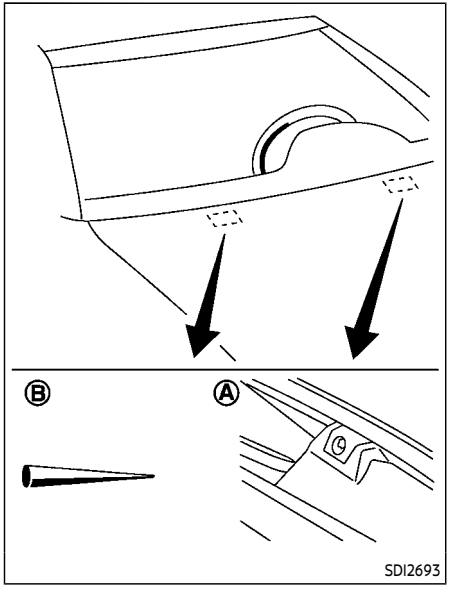

Be careful not to clog the washer nozzle Ⓐ . This may cause improper windshield washer operation. If the nozzle is clogged, remove any objects with a needle or small pin Ⓑ. Be careful not to damage the nozzle.

REAR WINDOW WIPER BLADE

It is recommended you contact a NISSAN dealer if checking or replacement is required.

BRAKES

If the brakes do not operate properly, it is recommended you have the brakes checked by a NISSAN dealer.

SELF-ADJUSTING BRAKES

Your vehicle is equipped with self-adjusting brakes.

The disc-type brakes self-adjust every time the brake pedal is applied.

WARNING

Have your brake system checked if the brake pedal height does not return to normal. It is recommended you visit a NISSAN dealer for this service.

BRAKE PAD WEAR WARNING

The disc brake pads have audible wear warnings. When a brake pad requires replacement, it will make a high pitched scraping sound when the vehicle is in motion. This scraping sound will first occur only when the brake pedal is depressed. After more wear of the brake pad, the sound will always be heard even if the brake pedal is not depressed. Have the brakes checked as soon as possible if the wear warning sound is heard.

Under some driving or climate conditions,

occasional brake squeak, squeal or other noise may be heard. Occasional brake noise during light to moderate stops is normal and does not affect the function or performance of the brake system.

Proper brake inspection intervals should be followed. For additional information, see the maintenance schedule shown in the "9. Maintenance and schedules" section.

FUSES

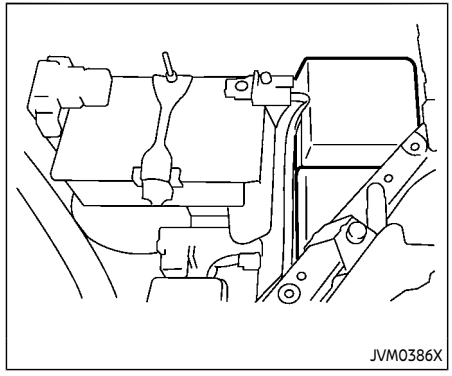

ENGINE COMPARTMENT

WARNING

Never use a fuse of a higher or lower amperage rating than that specified on the fuse box cover. This could damage the electrical system or electronic control units or cause a fire.

If any electrical equipment does not operate, check for an open fuse.

1. Be sure the ignition switch and the headlight switch are turned off.
2. Open the engine hood.
3. Remove the fuse/fusible link box cover by using a suitable tool and pushing the tab.
4. Locate the fuse that needs to be replaced.
5. Remove the fuse using the fuse puller located in the passenger compartment fuse box.

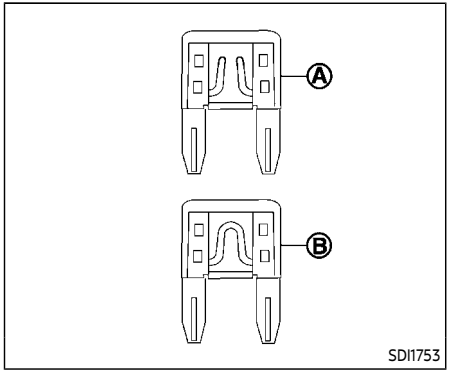

Type A

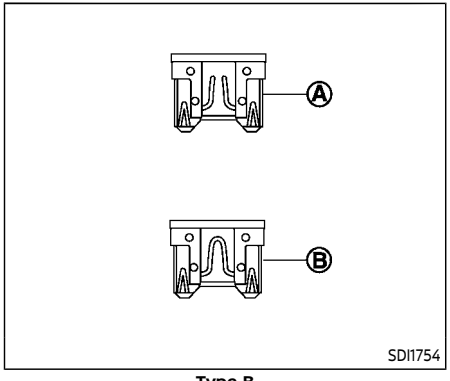

Type B

6. If the fuse is open Ⓐ, replace it with a new fuse Ⓑ.
7. If a new fuse also opens, have the electrical system checked and repaired. It is recommended you visit a NISSAN dealer for this service.

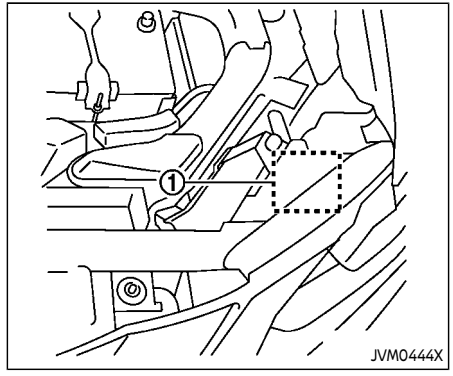

The holder ① also contains the fuses. It is recommended you visit a NISSAN dealer for checking and/or replacing.

Fusible links

If any electrical equipment does not operate and the fuses are in good condition, check the fusible links. If any of these fusible links are melted, replace only with genuine NISSAN parts.

For checking and replacing the fusible links, it is recommended you visit a NISSAN dealer.

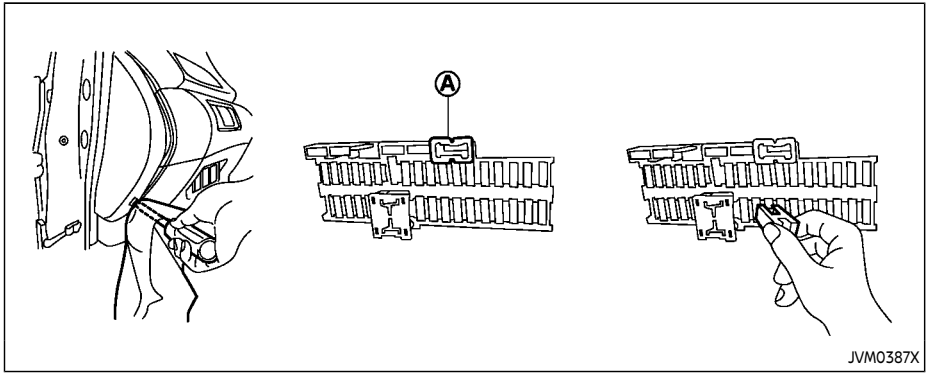

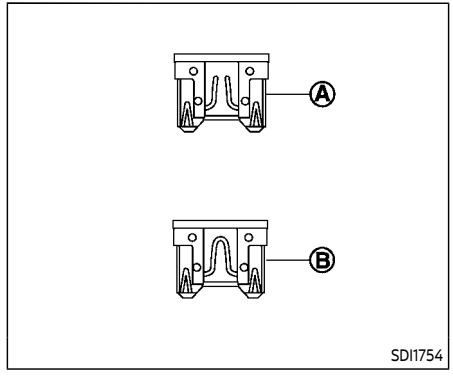

PASSENGER COMPARTMENT

WARNING

Never use a fuse of a higher or lower amperage rating than that specified on the fuse box cover. This could damage the electrical system or electronic control units or cause a fire.

If any electrical equipment does not operate, check for an open fuse.

1. Be sure the ignition switch and the headlight switch are turned off.
2. Remove the fuse box cover.
3. Remove the fuse with the fuse puller Ⓐ.
4. If the fuse is open Ⓐ, replace it with a new fuse Ⓑ.
5. If a new fuse also opens, have the electrical system checked and repaired. It is recommended you visit a NISSAN dealer for this service.

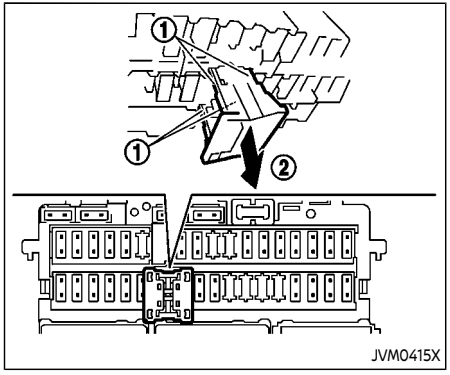

Extended storage fuse switch (if so equipped)

To reduce battery drain, the extended storage fuse switch comes from the factory switched off. Prior to delivery of your vehicle, the switch is pushed in (switched on) and should always remain on.

If the extended storage fuse switch is not pushed in (switched on), the meter may display a warning message. See "20. Shipping Mode On Push Storage Fuse warning" (P.2-30).

If any electrical equipment does not operate, remove the extended storage fuse switch and check for an open fuse.

NOTE:

If the extended storage fuse switch malfunctions or if the fuse is open, it is not necessary to replace the switch. In this case, remove the extended storage fuse switch and replace it with a new fuse of the same rating.

How to remove the extended storage fuse switch:

1. To remove the extended storage fuse switch, be sure the ignition switch is in the OFF or LOCK position.
2. Be sure the headlight switch is in the OFF position.
3. Remove the fuse box cover.
4. Pinch the locking tabs ① found on each side of the extended storage fuse switch.
5. Pull the extended storage fuse switch straight out from the fuse box ②.

CAUTION

- **Be careful not to allow children to swallow the battery and removed parts.**
- **An improperly disposed battery can harm the environment. Always confirm local regulations for battery disposal.**
- **When changing batteries, do not let dust or oil get on the components.**
- **There is danger of explosion if the lithium battery is incorrectly replaced. Replace only with the same or equivalent type.**

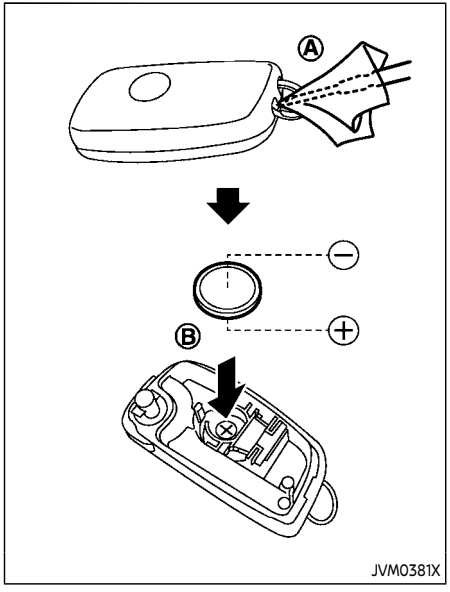

To replace the battery:

1. Insert a small screwdriver into the slit Ⓐ to open the lid. Use a cloth to protect the casing.
2. Replace the battery with a new one.

   Recommended battery: CR2032 or equivalent

   - Do not touch the internal circuit and electric terminals as doing so could cause a malfunction.
   - Hold the battery by the edges. Holding the battery across the contact points will seriously deplete the storage capacity.
   - Make sure that the ⊕ side faces the bottom of the case Ⓑ.
3. Close the lid securely.
4. Operate the buttons to check its operation.

See a NISSAN dealer if you need assistance for replacement.

FCC Notice:

For USA:

This device complies with Part 15 of the FCC Rules. Operation is subject to the following two conditions: (1) This device may not cause harmful interference, and (2) this device must accept any interference received, including interference that may cause undesired operation.

Note: Changes or modifications not expressly approved by the party responsible for compliance could void the user's authority to operate the equipment.

For Canada:

This device complies with Industry Canada licence-exempt RSS standard(s). Operation is subject to the following two conditions: (1) this device may not cause interference, and (2) this device must accept any interference, including interference that may cause undesired operation of the device.

CAUTION

- **Be careful not to allow children to swallow the battery and removed parts.**
- **An improperly disposed battery can harm the environment. Always confirm local regulations for battery disposal.**
- **When changing batteries, do not let dust or oil get on the components.**
- **There is danger of explosion if the lithium battery is incorrectly replaced. Replace only with the same or equivalent type.**

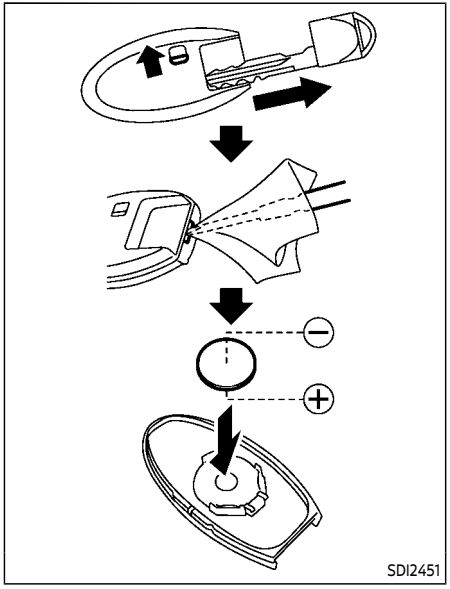

Replace the battery in the Intelligent Key as follows:

1. Remove the mechanical key from the Intelligent Key.
2. Insert a small screwdriver into the slit of the corner and twist it to separate the upper part from the lower part. Use a cloth to protect the casing.
3. Replace the battery with a new one.

   Recommended battery:

   CR2032 or equivalent

   - Do not touch the internal circuit and electric terminals as doing so could cause a malfunction.
   - Hold the battery by the edges. Holding the battery across the contact points will seriously deplete the storage capacity.
   - Make sure that the ⊕ side faces the bottom of the case.

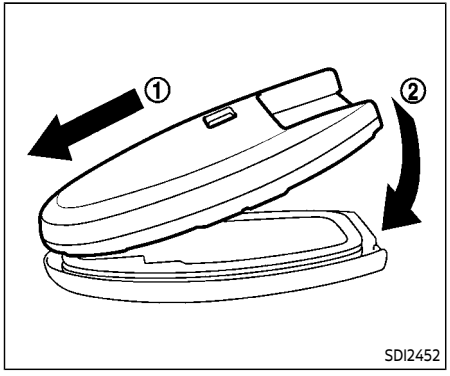

4. Align the tips of the upper and lower parts ①, and then push them together ② until it is securely closed.
5. Operate the buttons to check its operation.

If you need any assistance for replacement, it is recommended you visit a NISSAN dealer for this service.

FCC Notice:

For USA:

This device complies with Part 15 of the FCC Rules. Operation is subject to the following two conditions: (1) This device may not cause harmful interference, and (2) this device must accept any interference received, including interference that may cause undesired operation.

Note: Changes or modifications not expressly approved by the party responsible for compliance could void the user's authority to operate the equipment.

For Canada:

This device complies with Industry Canada licence-exempt RSS standard(s). Operation is subject to the following two conditions: (1) this device may not cause interference, and (2) this device must accept any interference, including interference that may cause undesired operation of the device.

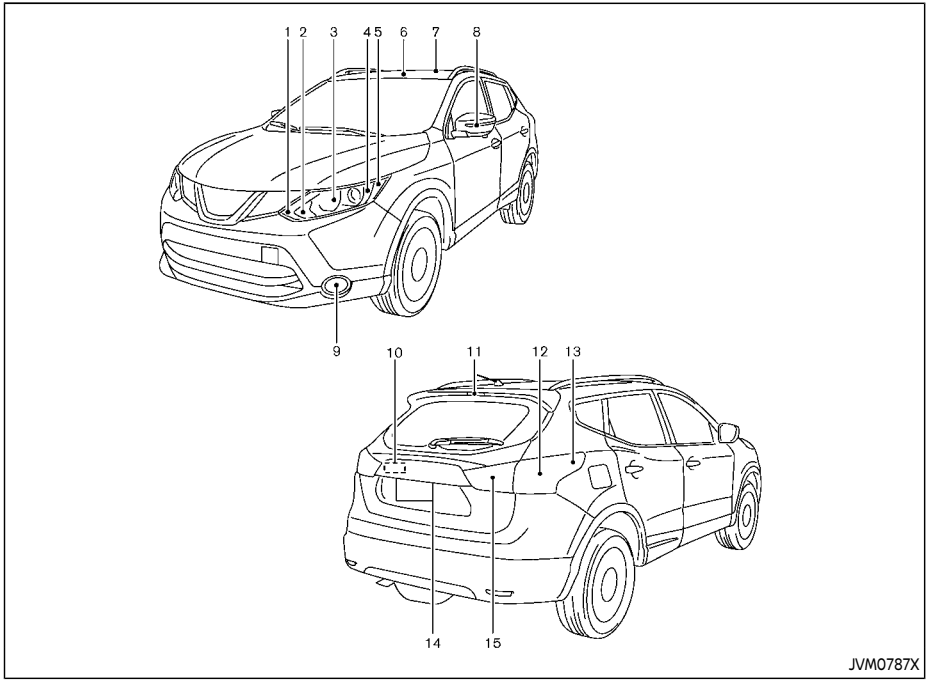

1. Front parking light/Daytime running light
2. Front turn signal light
3. Headlight (high-beam)
4. Headlight (low-beam)
5. Front side marker light
6. Map light and front room light
7. Room light
8. Side turn signal light (if so equipped)
9. Front fog light (if so equipped)
10. Cargo light
11. High-mounted stop light
12. Rear combination light (tail light, stop light, rear turn signal light)
13. Rear side marker light
14. License plate light
15. Reverse light/Tail light

HEADLIGHTS

Fog may temporarily form inside the lens of the exterior lights in the rain or in a car wash. A temperature difference between the inside and the outside of the lens causes the fog. This is not a malfunction. If large drops of water collect inside the lens, it is recommended you visit a NISSAN dealer for servicing.

Replacing

LED headlight model:

If LED headlight replacement is required, it is recommended that you visit a NISSAN dealer for this service.

Halogen headlight model:

The headlight is a semi-sealed beam type which uses a replaceable headlight (halogen) bulb.

CAUTION

- **Do not leave the bulb out of the headlight reflector for a long period of time. Dust, moisture, smoke, etc. entering the headlight body may affect bulb performance.**
- **High pressure halogen gas is sealed inside the halogen bulb. The bulb may break if the glass envelope is scratched or the bulb is dropped.**
- **Only touch the base when handling the bulb. Never touch the glass envelope. Touching the glass envelope could significantly affect bulb life and/or headlight performance.**
- **Aiming is not necessary after replacing the bulb. When aiming adjustment is necessary, it is recommended you visit a NISSAN dealer for this service.**

Use the same number and wattage as originally installed as shown in the chart.

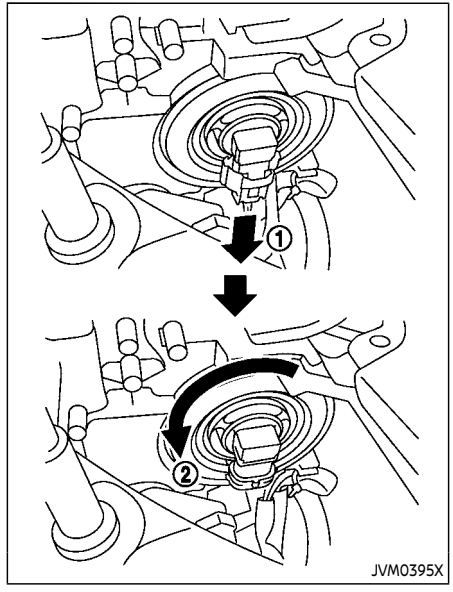

Low-beam/High-beam:

1. Disconnect the battery negative cable.
2. Disconnect the electrical connector ① from the rear end of the bulb.
3. Remove the headlight bulb ② by turning it counterclockwise. Do not shake or rotate the bulb when removing it.
4. Install the new bulb in the reverse order of

removal.

EXTERIOR AND INTERIOR LIGHTS

Item	Wattage (W)	Bulb No.
Headlight high/low beams (Halogen)	65/55	H9/H11
Headlight high/low beams (LED)*	LED	-
Front turn signal light*	21	WY21W
Front parking light*	LED	-
Front side marker light*	LED	-
Front fog light (if so equipped)*	55	H11
Side turn signal light (if so equipped)*	LED	-
Daytime running light*	LED	-
Rear combination light*		
Turn signal light	21	W21W
Stop/tail light	21/5	W21/5W
Tail light	3.8	W3.8W
Back-up	16	W16W
Rear side marker light*	5	W5W
License plate light*	5	W5W
Map light*	LED	—
Vanity mirror light (if so equipped)*	1.8	—
High-mounted stop light*	LED	—
Room light	8	—
Cargo light	5	—
Glove box light*	1.4	—

*: It is recommended you visit a NISSAN dealer for replacement.

NOTE: It is recommended that you check with the Parts Department at a NISSAN dealer for the latest information about parts.

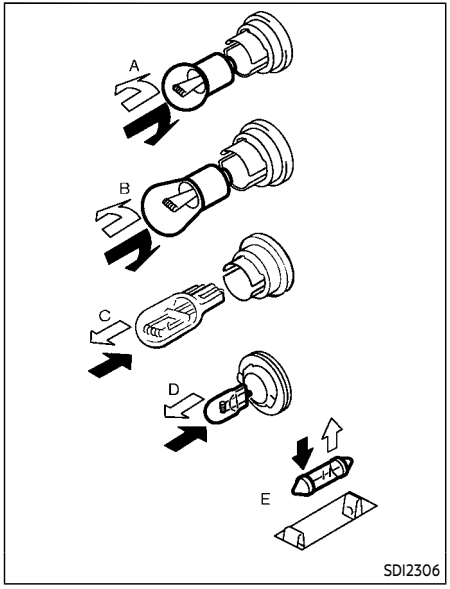

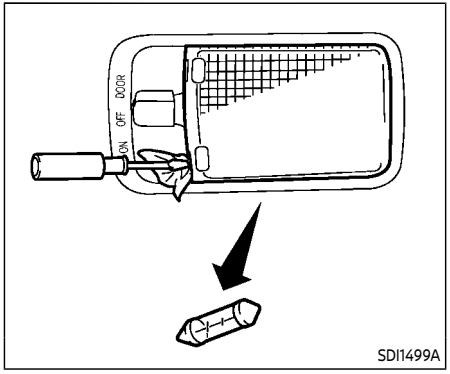

Room light

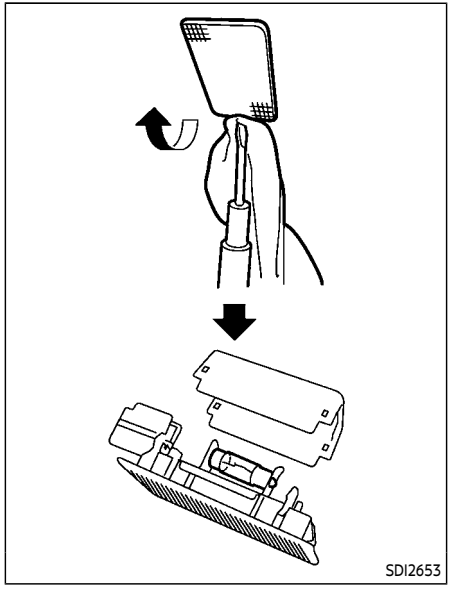

Cargo light

Replacement procedures

⇨: REMOVE
➡: INSTALL

All other lights are either type A, B, C, D or E. When replacing a bulb, first remove the lens and/or cover.

If you have a flat tire, see "Flat tire" (P.6-3).

TIRE PRESSURE

Tire Pressure Monitoring System (TPMS)

This vehicle is equipped with the Tire Pressure Monitoring System (TPMS). It monitors tire pressure of all tires except the spare. When the low tire pressure warning light is lit, and the "Tire Pressure Low - Add Air" warning message is displayed in the vehicle information display, one or more of your tires is significantly under-inflated.

The TPMS will activate only when the vehicle is driven at speeds above 16 MPH (25 km/h). Also, this system may not detect a sudden drop in tire pressure (for example a flat tire while driving).

For more details, see "Low tire pressure warning light" (P.2-13), "Tire Pressure Monitoring System (TPMS)" (P.5-5) and "Tire Pressure Monitoring System (TPMS)" (P.6-3).

Tire inflation pressure

Check the pressure of the tires (including the spare) often and always prior to long distance trips. The recommended tire pressure specifications are shown on the Tire and Loading Information label under the "Cold Tire Pressure" heading. The Tire and Loading Information label is affixed to the driver side center pillar. Tire pressures should be checked regularly because:

- Most tires naturally lose air over time.
- Tires can lose air suddenly when driven over potholes or other objects or if the vehicle strikes a curb while parking.

The tire pressures should be checked when the tires are cold. The tires are considered COLD after the vehicle has been parked for 3 or more hours, or driven less than 1 mile (1.6 km) at moderate speeds.

TPMS with Easy Fill Tire Alert provides visual and audible signals outside the vehicle for inflating the tires to the recommended COLD tire pressure. (See "TPMS with Easy Fill Tire Alert" (P.5-7).)

Incorrect tire pressure, including under inflation, may adversely affect tire life and vehicle handling.

WARNING

- **Improperly inflated tires can fail suddenly and cause an accident.**
- **The Gross Vehicle Weight rating (GVWR) is located on the F.M.V.S.S./C.M.V.S.S. certification label. The vehicle weight capacity is indicated on the Tire and Loading Information label. Do not load your vehicle beyond this capacity. Overloading your vehicle may result in reduced tire life, unsafe operating conditions due to premature tire failure, or unfavorable**

handling characteristics and could also lead to a serious accident. Loading beyond the specified capacity may also result in failure of other vehicle components.

- Before taking a long trip, or whenever you heavily load your vehicle, use a tire pressure gauge to ensure that the tire pressures are at the specified level.
- For additional information regarding tires, refer to "Important Tire Safety Information" (US) or "Tire Safety Information" (Canada) in the Warranty Information Booklet.

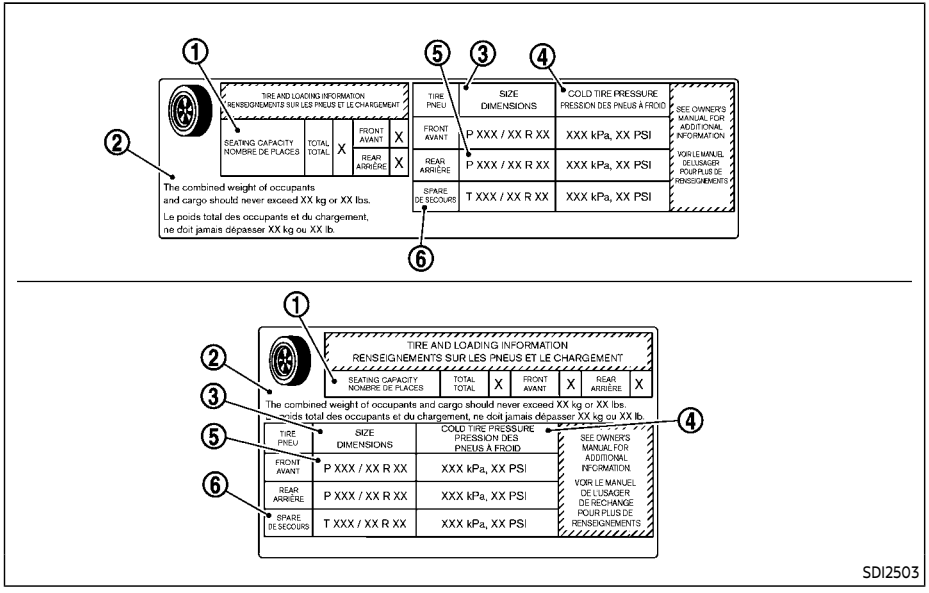

Tire and Loading Information label

① Seating capacity: The maximum number of occupants that can be seated in the vehicle.

② Vehicle load limit: See "Vehicle loading information" (P.10-11).

③ Original size: The size of the tires originally installed on the vehicle at the factory.

④ Cold tire pressure: Inflate the tires to this pressure when the tires are cold. Tires are considered COLD after the vehicle has been parked for 3 or more hours, or driven less than 1 mile (1.6 km) at moderate speeds. The recommended cold tire inflation is set by the manufacturer to provide the best balance of tire wear, vehicle handling, driveability, tire noise, etc., up to the vehicle's GVWR.

⑤ Tire size — see "Tire labeling" (P.8-33).

⑥ Spare tire size or compact spare tire size (if so equipped)

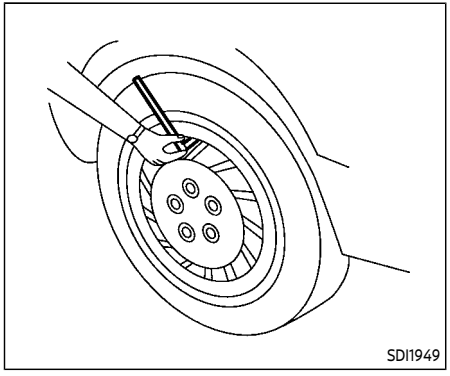

Checking the tire pressure

1. Remove the valve stem cap from the tire.
2. Press the pressure gauge squarely onto the valve stem. Do not press too hard or force the valve stem sideways, or air will escape. If the hissing sound of air escaping from the tire is heard while checking the pressure, reposition the gauge to eliminate this leakage.
3. Remove the gauge.
4. Read the tire pressure on the gauge stem and compare it to the specification shown on the Tire and Loading Information label.
5. Add air to the tire as needed. If too much air is added, press the core of the valve stem briefly with the tip of the gauge stem to release pressure. Recheck the pressure and add or release air as needed.
6. Install the valve stem cap.
7. Check the pressure of all other tires, including the spare.

	SIZE	COLD TIRE INFLATION PRESSURE
FRONT ORIGINAL TIRE	215/65 R16 98H	230 kPa, 33 PSI
	215/60 R17 96H	230 kPa, 33 PSI
	225/45 R19 92W	240 kPa, 35 PSI
REAR ORIGINAL TIRE	215/65 R16 98H	230 kPa, 33 PSI
	215/60 R17 96H	230 kPa, 33 PSI
	225/45 R19 92W	240 kPa, 35 PSI
SPARE TIRE	T145/90 D16 106M	420 kPa, 60 PSI

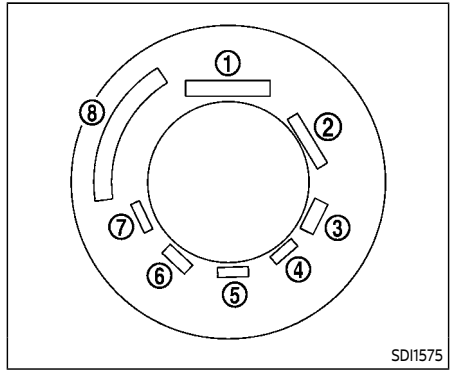

Example

TIRE LABELING

Federal law requires tire manufacturers to place standardized information on the sidewall of all tires. This information identifies and describes the fundamental characteristics of the tire and also provides the tire identification number (TIN) for safety standard certification. The TIN can be used to identify the tire in case of a recall.

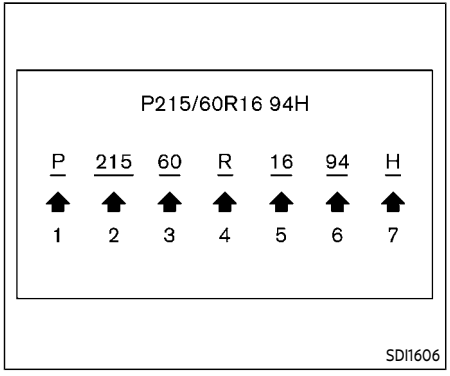

Example

① Tire size (example: P215/60R16 94H)

1. P: The "P" indicates the tire is designed for passenger vehicles. (Not all tires have this information.)
2. Three-digit number (215): This number gives the width in millimeters of the tire from sidewall edge to sidewall edge.
3. Two-digit number (60): This number, known as the aspect ratio, gives the tire's ratio of height to width.
4. R: The "R" stands for radial.
5. Two-digit number (16): This number is the wheel or rim diameter in inches.
6. Two- or three-digit number (94): This number is the tire's load index. It is a measurement of how much weight each tire can support. You may not find this information on all tires because it is not required by law.
7. H: Tire speed rating. You should not drive the vehicle faster than the tire speed rating.

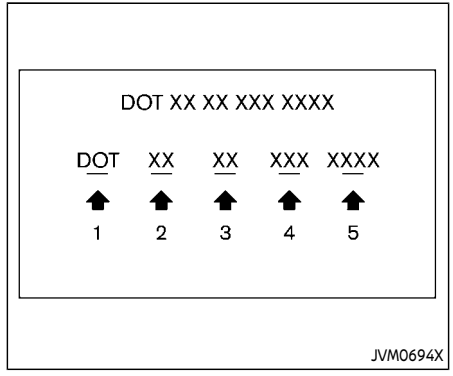

Example

② TIN (Tire Identification Number) for a new tire (example: DOT XX XX XXX XXXX)

1. DOT: Abbreviation for the "Department of Transportation". The symbol can be placed above, below or to the left or right of the Tire Identification Number.
2. Two-digit code: Manufacturer's identification mark
3. Two-digit code: Tire size

4. Three-digit code: Tire type code (Optional)
5. Four numbers represent the week and year the tire was built. For example, the numbers 3103 means the 31st week of 2003. If these numbers are missing, then look on the other sidewall of the tire.

③ Tire ply composition and material

The number of layers or plies of rubber-coated fabric in the tire.

Tire manufacturers also must indicate the materials in the tire, which include steel, nylon, polyester, and others.

④ Maximum permissible inflation pressure

This number is the greatest amount of air pressure that should be put in the tire. Do not exceed the maximum permissible inflation pressure.

⑤ Maximum load rating

This number indicates the maximum load in kilograms and pounds that can be carried by the tire. When replacing the tires on the vehicle, always use a tire that has the same load rating as the factory installed tire.

⑥ Term of "tubeless" or "tube type"

Indicates whether the tire requires an inner tube ("tube type") or not ("tubeless").

⑦ The word "radial"

The word "radial" is shown, if the tire has radial structure.

⑧ Manufacturer or brand name

Manufacturer or brand name is shown.

Other tire-related terminology:

In addition to the many terms that are defined throughout this section, Intended Outboard Sidewall is (1) the sidewall that contains a whitewall, bears white lettering or bears manufacturer, brand and/or model name molding that is higher or deeper than the same molding on the other sidewall of the tire, or (2) the outward facing sidewall of an asymmetrical tire that has a particular side that must always face outward when mounted on a vehicle.

TYPES OF TIRES

WARNING

- **When changing or replacing tires, be sure all four tires are of the same type (Example: Summer, All Season or Snow) and construction. A NISSAN dealer may be able to help you with information about tire type, size, speed rating and availability.**
- **Replacement tires may have a lower speed rating than the factory equipped tires, and may not match the potential maximum vehicle speed. Never exceed the maximum speed rating of the tire.**
- **Replacing tires with those not originally specified by NISSAN could affect the proper operation of the TPMS.**

- **For additional information regarding tires, refer to "Important Tire Safety Information" (US) or "Tire Safety Information" (Canada) in the Warranty Information Booklet.**
- **Always use tires of the same type, size, brand, construction and tread pattern on all four wheels. Failure to do so may result in a circumference difference between tires on the front and rear axles which can cause the Vehicle Dynamic Control (VDC) system to malfunction resulting in personal injury or death, excessive tire wear and may damage the transmission, transfer case and differential gears.**

All season tires

NISSAN specifies all season tires on some models to provide good performance all year, including snowy and icy road conditions. All Season tires are identified by ALL SEASON and/or M&S (Mud and Snow) on the tire sidewall. Snow tires have better snow traction than All Season tires and may be more appropriate in some areas.

Summer tires

NISSAN specifies summer tires on some models to provide superior performance on dry roads. Summer tire performance is substantially reduced in snow and ice. Summer tires do not have the tire traction rating M&S on the tire sidewall.

If you plan to operate your vehicle in snowy or icy conditions, NISSAN recommends the use of SNOW tires or ALL SEASON tires on all four wheels.

Snow tires

If snow tires are needed, it is necessary to select tires equivalent in size and load rating to the original equipment tires. If you do not, it can adversely affect the safety and handling of your vehicle.

Generally, snow tires will have lower speed ratings than factory equipped tires and may not match the potential maximum vehicle speed. Never exceed the maximum speed rating of the tire.

If you install snow tires, they must be the same size, brand, construction and tread pattern on all four wheels.

For additional traction on icy roads, studded tires may be used. However, some U.S. states and Canadian provinces prohibit their use. Check local, state and provincial laws before installing studded tires. Skid and traction capabilities of studded snow tires, on wet or dry surfaces, may be poorer than that of non-studded snow tires.

TIRE CHAINS

Use of tire chains may be prohibited according to location. Check the local laws before installing tire chains. When installing tire chains, make sure they are the proper size for the tires on your vehicle and are installed according to the chain manufacturer's suggestions. **Use only SAE Class S chains.** Class "S" chains are used on vehicles with restricted tire to vehicle clearance. Vehicles that can use Class "S" chains are designed to meet the SAE standard minimum clearances between the tire and the closest vehicle suspension or body component required to accommodate the use of a winter traction device (tire chains or cables). The minimum clearances are determined using the factory equipped tire size. Other types may damage your vehicle. Use chain tensioners when recommended by the tire chain manufacturer to ensure a tight fit. Loose end links of the tire chain must be secured or removed to prevent the possibility of whipping action damage to the fenders or underbody. If possible, avoid fully loading your vehicle when using tire chains. In

addition, drive at a reduced speed. Otherwise, your vehicle may be damaged and/or vehicle handling and performance may be adversely affected.

Tire chains must be installed only on the front wheels and not on the rear wheels.

Never install tire chains on a TEMPORARY USE ONLY spare tire.

Do not use tire chains on dry roads. Driving with tire chains in such conditions can cause damage to the various mechanisms of the vehicle due to some overstress.

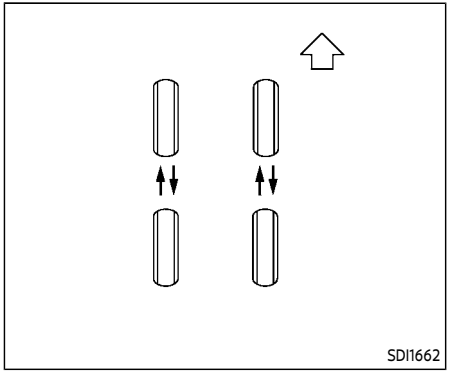

CHANGING WHEELS AND TIRES

Tire rotation

NISSAN recommends rotating the tires every 5,000 miles (8,000 km). (See "Flat tire" (P.6-3) for tire replacing procedures.)

As soon as possible, tighten the wheel nuts to the specified torque with a torque wrench.

Wheel nut tightening torque:

80 ft-lb (108 N·m)

The wheel nuts must be kept tightened to the specification at all times. It is recommended that wheel nuts be tightened to the specification at each tire rotation interval.

WARNING

- **After rotating the tires, check and adjust the tire pressure.**
- **Retighten the wheel nuts when the vehicle has been driven for 600 miles (1,000 km) (also in cases of a flat tire, etc.).**
- **Do not include the spare tire in the tire rotation.**
- **For additional information regarding tires, refer to "Important Tire Safety Information" (US) or "Tire Safety Information" (Canada) in the Warranty Information Booklet.**

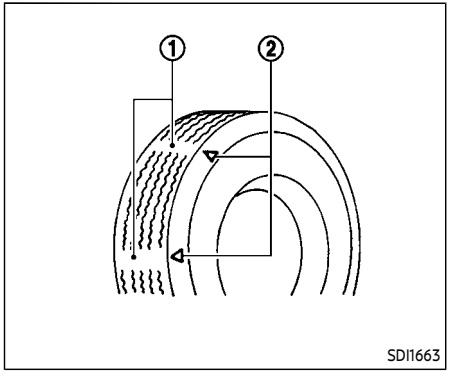

1. Wear indicator
2. Wear indicator location mark

Tire wear and damage

WARNING

- **Tires should be periodically inspected for wear, cracking, bulging or objects caught in the tread. If excessive wear, cracks, bulging or deep cuts are found, the tire(s) should be replaced.**
- **The original tires have built-in tread wear indicators. When wear indicators are visible, the tire(s) should be replaced.**
- **Tires degrade with age and use. Have tires, including the spare, over 6 years old checked by a qualified technician, because some tire damage may not be obvious. Replace the tires as necessary to prevent tire failure and possible personal injury.**
- **Improper service of the spare tire may result in serious personal injury. If it is necessary to repair the spare tire, it is recommended you visit a NISSAN dealer for this service.**
- **For additional information regarding tires, refer to "Important Tire Safety Information" (US) or "Tire Safety Information" (Canada) in the Warranty Information Booklet.**

Replacing wheels and tires

When replacing a tire, use the same size, tread design, speed rating and load carrying capacity as originally equipped. (See "Specifications" (P.10-7) for recommended types and sizes of tires and wheels.)

WARNING

- **The use of tires other than those recommended or the mixed use of tires of different brands, construction (bias, bias-belted or radial), or tread patterns can adversely affect the ride, braking, handling, VDC system, ground clearance, body-to-tire clearance, tire chain clearance, speedometer calibration, headlight aim and bumper height. Some of these effects may lead to accidents and could result in serious personal injury.**
- **For Two-Wheel Drive (2WD) models, if your vehicle was originally equipped with 4 tires that were**

the same size and you are only replacing 2 of the 4 tires, install the new tires on the rear axle. Placing new tires on the front axle may cause loss of vehicle control in some driving conditions and cause an accident and personal injury.

- **If the wheels are changed for any reason, always replace with wheels which have the same off-set dimension. Wheels of a different off-set could cause premature tire wear, degrade vehicle handling characteristics and/or interference with the brake discs/drums. Such interference can lead to decreased braking efficiency and/or early brake pad/shoe wear. See "Wheels and tires" (P.10-7) of this manual for wheel off-set dimensions.**
- **Since the spare tire is not equipped with the TPMS, when a spare tire is mounted or a wheel is replaced, the TPMS will not function and the low tire pressure warning light will flash for approximately 1 minute. The light will remain on after 1 minute. Have your tires replaced and/or TPMS system reset as soon as possible. It is recommended you visit a NISSAN dealer for these services.**
- **Replacing tires with those not originally specified by NISSAN could affect the proper operation of the TPMS.**
- **The TPMS sensor may be damaged if it is not handled correctly. Be careful when handling the TPMS sensor.**
- **When replacing the TPMS sensor, the ID registration may be required. It is recommended you visit a NISSAN dealer for ID registration.**
- **Do not use a valve stem cap that is not specified by NISSAN. The valve stem cap may become stuck.**
- **Be sure that the valve stem caps are correctly fitted. Otherwise the valve may be clogged up with dirt and cause a malfunction or loss of pressure.**
- **Do not install a damaged or deformed wheel or tire even if it has been repaired. Such wheels or tires could have structural damage and could fail without warning.**
- **The use of retread tire is not recommended.**
- **For additional information regarding tires, refer to "Important Tire Safety Information" (US) or "Tire Safety Information" (Canada) in the Warranty Information Booklet.**

All-Wheel Drive (AWD) models

CAUTION

- **Always use tires of the same size, brand, construction (bias, bias-belted or radial), and tread pattern on all four wheels. Failure to do so may result in a circumference difference between tires on the front and rear axles which will cause excessive tire wear and may damage the transmission, transfer case and rear differential gears.**
- **Only use spare tires specified for each AWD model.**

If excessive tire wear is found, it is recommended that all four tires be replaced with tires of the same size, brand,

construction and tread pattern. The tire pressure and wheel alignment should also be checked and corrected as necessary. It is recommended you visit a NISSAN dealer for this service.

Wheel balance

Unbalanced wheels may affect vehicle handling and tire life. Even with regular use, wheels can get out of balance. Therefore, they should be balanced as required.

Wheel balance service should be performed with the wheels off the vehicle. Spin balancing the wheels on the vehicle could lead to mechanical damage.

For additional information regarding tires, refer to "Important Tire Safety Information" (US) or "Tire Safety Information" (Canada) in the Warranty Information Booklet.

Care of wheels

See "Cleaning exterior" (P.7-2) for details about care of the wheels.

Spare tire

Since the spare tire is not equipped with the TPMS, when a spare tire is mounted (TEMPORARY USE ONLY), the TPMS will not function.

Observe the following precautions if the TEMPORARY USE ONLY spare tire must be used, otherwise your vehicle could be damaged or involved in an accident.

WARNING

- **The TEMPORARY USE ONLY spare tire should be used for emergency use. It should be replaced with the standard tire at the first opportunity to avoid possible tire or differential damage.**
- **Drive carefully while the TEMPORARY USE ONLY spare tire is installed. Avoid sharp turns and abrupt braking while driving.**
- **Periodically check spare tire inflation pressure. Always keep the pressure of the TEMPORARY USE ONLY spare tire at 60 psi (420 kPa, 4.2 bar).**
- **With the TEMPORARY USE ONLY spare tire installed, do not drive your vehicle at speeds faster than 50 MPH (80 km/h).**
- **When driving on roads covered with snow or ice, the TEMPORARY USE ONLY spare tire should be used on the rear wheels and original tire used on the front wheels (drive wheels). Use tire chains only on the front (original) tires.**
- **Tire tread of the TEMPORARY USE ONLY spare tire will wear at a faster rate than the standard tire. Replace the spare tire as soon as the tread wear indicators appear.**
- **Do not use the spare tire on other vehicles.**
- **Do not use more than one spare tire at the same time.**

CAUTION

- **Do not use tire chains on a TEMPORARY USE ONLY spare tire. Tire chains will not fit properly and may cause damage to the vehicle.**
- **Because the TEMPORARY USE ONLY spare tire is smaller than the original tire, ground clearance**

is reduced. To avoid damage to the vehicle, do not drive over obstacles. Also do not drive the vehicle through an automatic car wash since it may get caught.

MEMO

9 Maintenance and schedules

Maintenance requirement 9-2
General maintenance 9-2
Scheduled maintenance 9-2
Where to go for service 9-2
General maintenance 9-2
Explanation of general maintenance items 9-2
Explanation of scheduled maintenance items 9-5
Emission control system maintenance 9-5
Chassis and body maintenance 9-6
Maintenance schedules 9-6
Additional maintenance items for severe operating conditions 9-6
Standard maintenance 9-7
Emission control system maintenance 9-8
Chassis and body maintenance 9-11
Maintenance under severe driving conditions 9-13
Maintenance log 9-14

MAINTENANCE REQUIREMENT

Some day-to-day and regular maintenance is essential to maintain your vehicle good mechanical condition, as well as its emission and engine performance.

It is the owner's responsibility to make sure that the scheduled maintenance, as well as general maintenance, is performed.

As the vehicle owner, you are the only one who can ensure that your vehicle receives the proper maintenance care. You are a vital link in the maintenance chain.

GENERAL MAINTENANCE

General maintenance includes those items which should be checked during normal day-to-day operation. They are essential for proper vehicle operation. It is your responsibility to perform these procedures regularly as prescribed.

Performing general maintenance checks requires minimal mechanical skill and only a few general automotive tools.

These checks or inspections can be done by yourself, a qualified technician or, if you prefer, a NISSAN dealer.

SCHEDULED MAINTENANCE

The maintenance items listed in this section are required to be serviced at regular intervals. However, under severe driving conditions, additional or more frequent maintenance will be required.

WHERE TO GO FOR SERVICE

If maintenance service is required or your vehicle appears to malfunction, have the systems checked and serviced. It is recommended you visit a NISSAN dealer for this service.

NISSAN technicians are well-trained specialists and are kept up-to-date with the latest service information through technical bulletins, service tips, and training programs. They are completely qualified to work on NISSAN vehicles **before** work begins.

You can be confident that a NISSAN dealer's service department performs the best job to meet the maintenance requirements on your vehicle.

GENERAL MAINTENANCE

During the normal day-to-day operation of the vehicle, general maintenance should be performed regularly as prescribed in this section. If you detect any unusual sounds, vibrations or smells, be sure to check for the cause or have it checked promptly. In addition, it is recommended that you visit a NISSAN dealer if you think that repairs are required.

When performing any checks or maintenance work, see "Maintenance precautions" (P.8-2).

EXPLANATION OF GENERAL MAINTENANCE ITEMS

Additional information on the following items with "*" is found in the "8. Do-it yourself" section of this manual.

Outside the vehicle

The maintenance items listed here should be performed from time to time, unless otherwise specified.

Doors and engine hood: Check that all doors and the engine hood operate properly. Also ensure that all latches lock securely. Lubricate hinges, latches, latch pins, rollers and links if necessary. Make sure that the secondary latch keeps the hood from opening when the primary latch is released.

When driving in areas using road salt or

other corrosive materials, check lubrication frequently.

Lights*: Clean the headlights on a regular basis. Make sure that the headlights, stop lights, tail lights, turn signal lights, and other lights are all operating properly and installed securely. Also check headlight aim.

Road wheel nuts (lug nuts)*: When checking the tires, make sure no wheel nuts are missing, and check for any loose wheel nuts. Tighten if necessary.

Tire rotation*: Tires should be rotated every 5,000 miles (8,000 km).

Tires*: Check the pressure with a gauge often and always prior to long distance trips. If necessary, adjust the pressure in all tires, including the spare, to the pressure specified. Check carefully for damage, cuts or excessive wear.

Tire Pressure Monitoring System (TPMS) transmitter components: Replace the TPMS transmitter grommet seal, valve core and cap when the tires are replaced due to wear or age.

Wheel alignment and balance: If the vehicle should pull to either side while driving on a straight and level road, or if you detect uneven or abnormal tire wear, there may be a need for wheel alignment.

If the steering wheel or seat vibrates at normal highway speeds, wheel balancing may be needed.

For additional information regarding tires, refer to "Important Tire Safety Information" (US) or "Tire Safety Information" (Canada) in the NISSAN Warranty Information Booklet.

Windshield: Clean the windshield on a regular basis. Check the windshield at least every six months for cracks or other damage. Have a damaged windshield repaired by a qualified repair facility.

Windshield wiper blades*: Check for cracks or wear if they do not wipe properly.

Inside the vehicle

The maintenance items listed here should be checked on a regular basis, such as when performing scheduled maintenance, cleaning the vehicle, etc.

Accelerator pedal: Check the pedal for smooth operation and make sure the pedal does not catch or require uneven effort. Keep the floor mat away from the pedal.

Brake pedal: Check the pedal for smooth operation. If the brake pedal suddenly goes down further than normal, the pedal feels spongy or the vehicle seems to take longer to stop, have your vehicle checked immediately. It is recommended you visit a NISSAN dealer for this service. Keep the floor mat away from the pedal.

Brakes: Check that the brakes do not pull the vehicle to one side when applied.

Continuously Variable Transmission (CVT) P (Park) mechanism: On a fairly steep hill, check that the vehicle is held securely with the shift lever in the P (Park) position without applying any brakes.

Parking brake: Check the parking brake operation regularly. The vehicle should be securely held on a fairly steep hill with only the parking brake applied. If the parking brake needs adjusted, it is recommended you visit a NISSAN dealer for this service.

Seat belts: Check that all parts of the seat belt system (for example, buckles, anchors, adjusters and retractors) operate properly and smoothly, and are installed securely. Check the belt webbing for cuts, fraying, wear or damage.

Seats: Check seat position controls such as seat adjusters, seatback recliners, etc. to ensure they operate smoothly and that all latches lock securely in every position. Check that the head restraints move up and down smoothly and that the locks (if so equipped) hold securely in all latched positions.

Steering wheel: Check for changes in the steering conditions, such as excessive free play, hard steering or strange noises.

Warning lights and chimes: Make sure that all warning lights and chimes are operating properly.

Windshield defroster: Check that the air comes out of the defroster outlets properly and in sufficient quantity when operating the heater or air conditioner.

Windshield wiper and washer*: Check that the wipers and washers operate properly and that the wipers do not streak.

Under the hood and vehicle

The maintenance items listed here should be checked periodically (for example, each time you check the engine oil or refuel).

Battery*: Check the fluid level in each cell.

It should be between the MAX and MIN lines. Vehicles operated in high temperatures or under severe condition require frequent checks of the battery fluid level.

NOTE:

Care should be taken to avoid situations that can lead to potential battery discharge and potential no-start conditions such as:

1. **Installation or extended use of electronic accessories that consume battery power when the engine is not running (Phone chargers, GPS, DVD players, etc.)**
2. **Vehicle is not driven regularly and/or only driven short distances.**

In these cases, the battery may need to be charged to maintain battery health.

Brake and clutch fluid level*: Make sure that the brake and clutch fluid level is between the MAX and MIN lines on the reservoir.

Engine coolant level*: Check the coolant level when the engine is cold.

Engine drive belt*: Make sure that the drive belt is not frayed, worn, cracked or oily.

Engine oil level*: Check the level after parking the vehicle on a level surface and turning off the engine. Wait more than 10 minutes for the oil to drain back into the oil pan.

Exhaust system: Make sure there are no loose supports, cracks or holes. If the sound of the exhaust seems unusual or there is a smell of exhaust fumes, immediately have the exhaust system inspected. It is recommended you visit a NISSAN dealer for this service. (See “Precautions when starting and driving” (P.5-4) for exhaust gas (carbon monoxide).)

Fluid leaks: Check under the vehicle for fuel, oil, water or other fluid leaks after the vehicle has been parked for a while. Water dripping from the air conditioner after use is normal. If you should notice any leaks or if gasoline fumes are evident, check for the cause and have it corrected immediately.

Radiator and hoses: Check the front of the radiator and clean off any dirt, insects, leaves, etc., that may have accumulated. Make sure the hoses have no cracks, deformation, rot or loose connections.

Underbody: The underbody is frequently exposed to corrosive substances such as those used on icy roads or to control dust. It is very important to remove these substances, otherwise rust will form on the floor pan, frame, fuel lines and around the exhaust system. At the end of winter, the underbody should be thoroughly flushed with plain water, being careful to clean those areas where mud and dirt may accumulate. For additional information, see “Cleaning exterior” (P.7-2).

Windshield washer fluid*: Check that there is adequate fluid in the reservoir.

EXPLANATION OF SCHEDULED MAINTENANCE ITEMS

The following descriptions are provided to give you a better understanding of the scheduled maintenance items that should be regularly checked or replaced. The maintenance schedule indicates at which mileage/time intervals each item requires service.

In addition to scheduled maintenance, your vehicle requires that some items be checked during normal day-to-day operation. Refer to "General maintenance" (P.9-2).

Items marked with "*" are recommended by NISSAN for reliable vehicle operation. You are not required to perform maintenance on these items in order to maintain the warranties which come with your vehicle. Other maintenance items and intervals are required.

When applicable, additional information can be found in the "8. Do-it yourself" section of this manual.

NOTE:

NISSAN does not advocate the use of non-OEM approved aftermarket flushing systems and strongly advises against performing these services on a NISSAN product. Many of the aftermarket flushing systems use non-OEM approved chemicals or solvents, the use of which has not been validated by NISSAN.

For recommended fuel, lubricants, fluids, grease, and refrigerant, refer to "Capacities and recommended fluids/lubricants" (P.10-2) of this manual.

EMISSION CONTROL SYSTEM MAINTENANCE

Drive belt*:

Check engine drive belt for wear, fraying or cracking and for proper tension. Replace any damaged drive belt.

Engine air filter:

Replace at specified intervals. When driving for prolonged periods in dusty conditions, check/replace the filter more frequently.

Engine coolant*:

Replace coolant at the specified interval. When adding or replacing coolant, be sure to use only Genuine NISSAN Long Life Antifreeze/Coolant (blue) or equivalent with the proper mixture. (Refer to "Engine cooling system" (P.8-4) to determine the proper mixture for your area.)

NOTE:

Mixing any other type of coolant or the use of non-distilled water may reduce the recommended service interval of the coolant.

Engine oil and oil filter:

Replace engine oil and oil filter at the specified intervals. For recommended oil grade and viscosity refer to "Capacities and recommended fluids/lubricants" (P.10-2).

Engine valve clearance*:

Inspect only if valve noise increases.

Adjust valve clearance if necessary.

Evaporative emissions control vapor lines*:

Check vapor lines for leaks or looseness. Tighten connections or replace parts as necessary.

Fuel filter

Periodic maintenance is not required (in-tank type filter).

Fuel lines*:

Check the fuel hoses, piping and connections for leaks, looseness, or deterioration. Tighten connections or replace parts as necessary.

Spark plugs:

Replace at specified intervals. Install new plugs of the type as originally equipped.

CHASSIS AND BODY MAINTENANCE

Brake lines and cables:

Visually inspect for proper installation. Check for chafing, cracks, deterioration, and signs of leaking. Replace any deteriorated or damaged parts immediately.

Brake pads and rotors:

Check for wear, deterioration and fluid leaks. Replace any deteriorated or damaged parts immediately.

Exhaust system:

Visually inspect the exhaust pipes, muffler and hangers for leaks, cracks, deterioration, and damage. Tighten connections or replace parts as necessary.

In-cabin microfilter:

Replace at specified intervals. When driving for prolonged periods in dusty conditions, replace the filter more frequently.

Propeller shaft(s):

Check for damage, looseness, and grease leakage. (AWD)

Steering gear and linkage, axle and suspension parts, drive shaft boots:

Check for damage, looseness, and leakage of oil or grease. Under severe driving conditions, inspect more frequently.

Tire rotation:

Tires should be rotated every 5,000 miles (8,000 km) according to the instructions under "Explanation of general maintenance items" (P.9-2). When rotating tires, check for damage and uneven wear. Replace if necessary.

Transmission fluid/oil, differential oil and transfer case oil:

Visually inspect for signs of leakage at specified intervals.

If using a car-top carrier, or driving on rough or muddy roads:

- Replace the Manual Transmission gear oil every 20,000 miles (32,000 km) or 24 months.
- Replace the CVT fluid every 60,000 miles (96,000 km) or request the dealer to inspect the fluid deterioration data using a CONSULT. If the deterioration data is more than 210,000, replace the CVT fluid.

To help ensure smooth, safe and economical driving, NISSAN provides two maintenance schedules that may be used, depending upon the conditions in which you usually drive. These schedules contain both distance and time intervals, up to 120,000 miles (192,000 km)/144 months. For most people, the odometer reading will indicate when service is needed. However, if you drive very little, your vehicle should be serviced at the regular time intervals shown in the schedule.

After 120,000 miles (192,000 km)/144 months, continue maintenance at the same mileage/time intervals.

ADDITIONAL MAINTENANCE ITEMS FOR SEVERE OPERATING CONDITIONS

Additional maintenance items for severe operating conditions; should be performed on vehicles that are driven under especially demanding conditions. Additional maintenance items should be performed if you primarily operate your vehicle under the following conditions:

- Repeated short trips of less than 5 miles (8 km).
- Repeated short trips of less than 10 miles (16 km) with outside temperatures remaining below freezing.

STANDARD MAINTENANCE

- Operating in hot weather in stop-and-go "rush hour" traffic.
- Extensive idling and/or low speed driving for long distances, such as police, taxi or door-to-door delivery use.
- Driving in dusty conditions.
- Driving on rough, muddy or salt spread roads.
- Using a car-top carrier.

NOTE:

For vehicles operated in Canada, both standard and severe maintenance items should be performed at every interval.

The following tables show the standard maintenance schedule. Depending upon weather and atmospheric conditions, varying road surfaces, individual driving habits and vehicle usage, additional or more frequent maintenance may be required.

After 120,000 miles (192,000 km)/144 months, continue maintenance at the same mileage/time intervals.

EMISSION CONTROL SYSTEM MAINTENANCE

Abbreviations: I = Inspect and correct or replace as necessary, R = Replace

MAINTENANCE OPERATION Perform at number of miles, kilometers or months, whichever comes first.	Miles × 1,000 (km × 1,000) Months	MAINTENANCE INTERVAL											
		5 (8) 6	10 (16) 12	15 (24) 18	20 (32) 24	25 (40) 30	30 (48) 36	35 (56) 42	40 (64) 48	45 (72) 54	50 (80) 60	55 (88) 66	60 (96) 72
Drive belt	See NOTE (1)								I*		I*		I*
Air cleaner filter	See NOTE (2)						R						R
EVAP vapor lines					I*				I*				I*
Fuel lines					I*				I*				I*
Fuel filter	See NOTE (3)												
Engine coolant*	See NOTE (4)(5)												
Engine oil		R	R	R	R	R	R	R	R	R	R	R	R
Engine oil filter		R	R	R	R	R	R	R	R	R	R	R	R
Spark plugs	See NOTE (6)	Replace every 105,000 miles (168,000 km)											
Intake and exhaust valve clearance*	See NOTE (7)												

MAINTENANCE OPERATION Perform at number of miles, kilometers or months, whichever comes first.	Miles × 1,000 (km × 1,000) Months	MAINTENANCE INTERVAL											
		65 (104) 78	70 (112) 84	75 (120) 90	80 (128) 96	85 (136) 102	90 (144) 108	95 (152) 114	100 (160) 120	105 (168) 126	110 (176) 132	115 (184) 138	120 (192) 144
Drive belt	See NOTE (1)		I*		I*		I*		I*		I*		I*
Air cleaner filter	See NOTE (2)						R						R
EVAP vapor lines					I*				I*				I*
Fuel lines					I*				I*				I*
Fuel filter	See NOTE (3)												
Engine coolant*	See NOTE (4)(5)												
Engine oil		R	R	R	R	R	R	R	R	R	R	R	R
Engine oil filter		R	R	R	R	R	R	R	R	R	R	R	R
Spark plugs	See NOTE (6)	Replace every 105,000 miles (168,000 km)											
Intake and exhaust valve clearance*	See NOTE (7)												

NOTE:

(1) After 40,000 miles (64,000 km) or 48 months, inspect every 10,000 miles (16,000 km) or 12 months. Replace the drive belt if found damaged.

(2) If operating mainly in dusty conditions, more frequent maintenance may be required.

(3) Periodic maintenance is not required.

(4) First replacement interval is 105,000 miles (168,000 km) or 84 months. After first replacement, replace every 75,000 miles (120,000 km) or 60 months.

(5) Use only Genuine NISSAN Long Life Antifreeze/Coolant (blue) or equivalent with proper mixture ratio of 50% antifreeze and 50% demineralized or distilled water. Mixing any other type of coolant or the use of non-distilled water may reduce the life expectancy of the factory fill coolant.

(6) Replace spark plug when the plug gap exceeds 0.053 in (1.35 mm) even if within specified replacement mileage.

(7) Periodic maintenance is not required. However, if valve noise increases, inspect valve clearance.

***: Maintenance items and intervals with "*" are recommended by NISSAN for reliable vehicle operation. The owner does not need to perform such maintenance in order to maintain the emis-**

sion warranty or manufacturer recall liability. Other maintenance items and intervals are required.

CHASSIS AND BODY MAINTENANCE

Abbreviations: I = Inspect and correct or replace as necessary, R = Replace

MAINTENANCE OPERATION Perform at of miles, kilometers or months, whichever comes first.	Miles × 1,000 (km × 1,000) Months	MAINTENANCE INTERVAL											
		5 (8) 6	10 (16) 12	15 (24) 18	20 (32) 24	25 (40) 30	30 (48) 36	35 (56) 42	40 (64) 48	45 (72) 54	50 (80) 60	55 (88) 66	60 (96) 72
Brake lines and cables			I		I		I		I		I		I
Brake pads and rotors★			I		I		I		I		I		I
Brake fluid★					R				R				R
CVT fluid	See NOTE (1)		I		I		I		I		I		I
Manual Transmission gear oil	See NOTE (2)		I		I		I		I		I		I
Transfer fluid and differential gear oil	See NOTE (2)		I		I		I		I		I		I
Steering gear and linkage, axle and suspension parts★					I				I				I
Tire rotation	See NOTE (3)												
Propeller shaft (AWD) and drive shaft boots★			I		I		I		I		I		I
Exhaust system★					I				I				I
In-cabin microfilter				R			R			R			R
Intelligent Key battery				R			R			R			R

MAINTENANCE OPERATION Perform at of miles, kilometers or months, whichever comes first.	Miles × 1,000 (km × 1,000) Months	MAINTENANCE INTERVAL											
		65 (104) 78	70 (112) 84	75 (120) 90	80 (128) 96	85 (136) 102	90 (144) 108	95 (152) 114	100 (160) 120	105 (168) 126	110 (176) 132	115 (184) 138	120 (192) 144
Brake lines and cables			I		I		I		I		I		I
Brake pads and rotors★			I		I		I		I		I		I
Brake fluid★					R				R				R
CVT fluid	See NOTE (1)		I		I		I		I		I		I
Manual Transmission gear oil	See NOTE (2)		I		I		I		I		I		I
Transfer fluid and differential gear oil	See NOTE (2)		I		I		I		I		I		I
Steering gear and linkage, axle and suspension parts★					I				I				I
Tire rotation	See NOTE (3)												
Propeller shaft (AWD) and drive shaft boots★			I		I		I		I		I		I
Exhaust system★					I				I				I
In-cabin microfilter				R			R			R			R
Intelligent Key battery				R			R			R			R

NOTE:

Maintenance items with "★" should be performed more frequently according to "Maintenance under severe driving conditions" (P.9-13).

(1) If using a car-top carrier, or driving on rough or muddy roads, inspect CVT fluid deterioration every 60,000 miles (96,000 km), then change CVT fluid if necessary. It is recommended that you visit a NISSAN dealer for this service. And if the inspection is not performed, change (not just inspect) CVT fluid every 60,000 miles (96,000 km).

(2) If using a car-top carrier, or driving on rough or muddy roads, change (not just inspect) oil at every 20,000 miles (32,000 km) or 24 months.

(3) Refer to "Tire rotation" under "General maintenance" (P.9-2).

MAINTENANCE UNDER SEVERE DRIVING CONDITIONS

The maintenance intervals shown on the preceding pages are for normal operating conditions. If the vehicle is mainly operated under severe driving conditions as shown below, more frequent maintenance must be performed on the following items as shown in the table.

Severe driving conditions

- Repeated short trips of less than 5 miles (8 km).
- Repeated short trips of less than 10 miles (16 km) with outside temperatures remaining below freezing.
- Operating in hot weather in stop-and-go "rush hour" traffic.
- Extensive idling and/or low speed driving for long distances, such as police, taxi or door-to-door delivery use.
- Driving in dusty conditions.
- Driving on rough, muddy, or salt spread roads.
- Using a car-top carrier.

Maintenance operation: Inspect = Inspect and correct or replace as necessary.

Maintenance item	Maintenance operation	Maintenance interval
Brake fluid	Replace	Every 10,000 miles (16,000 km) or 12 months
Brake pads & rotors	Inspect	Every 5,000 miles (8,000 km) or 6 months
Steering gear & linkage, axle & suspension parts	Inspect	Every 5,000 miles (8,000 km) or 6 months
Propeller shaft (AWD) and drive shaft boots	Inspect	Every 5,000 miles (8,000 km) or 6 months
Exhaust system	Inspect	Every 5,000 miles (8,000 km) or 6 months

MAINTENANCE LOG

5,000 Miles (8,000 km) or 6 Months Dealer Name: Date: Mileage: Dealer Stamp:	**10,000 Miles (16,000 km) or 12 Months** Dealer Name: Date: Mileage: Dealer Stamp:	**15,000 Miles (24,000 km) or 18 Months** Dealer Name: Date: Mileage: Dealer Stamp:
20,000 Miles (32,000 km) or 24 Months Dealer Name: Date: Mileage: Dealer Stamp:	**25,000 Miles (40,000 km) or 30 Months** Dealer Name: Date: Mileage: Dealer Stamp:	**30,000 Miles (48,000 km) or 36 Months** Dealer Name: Date: Mileage: Dealer Stamp:
35,000 Miles (56,000 km) or 42 Months Dealer Name: Date: Mileage: Dealer Stamp:	**40,000 Miles (64,000 km) or 48 Months** Dealer Name: Date: Mileage: Dealer Stamp:	**45,000 Miles (72,000 km) or 54 Months** Dealer Name: Date: Mileage: Dealer Stamp:

50,000 Miles (80,000 km) or 60 Months Dealer Name: Date: Mileage: Dealer Stamp:	**55,000 Miles (88,000 km) or 66 Months** Dealer Name: Date: Mileage: Dealer Stamp:	**60,000 Miles (96,000 km) or 72 Months** Dealer Name: Date: Mileage: Dealer Stamp:
65,000 Miles (104,000 km) or 78 Months Dealer Name: Date: Mileage: Dealer Stamp:	**70,000 Miles (112,000 km) or 84 Months** Dealer Name: Date: Mileage: Dealer Stamp:	**75,000 Miles (120,000 km) or 90 Months** Dealer Name: Date: Mileage: Dealer Stamp:
80,000 Miles (128,000 km) or 96 Months Dealer Name: Date: Mileage: Dealer Stamp:	**85,000 Miles (136,000 km) or 102 Months** Dealer Name: Date: Mileage: Dealer Stamp:	**90,000 Miles (144,000 km) or 108 Months** Dealer Name: Date: Mileage: Dealer Stamp:

95,000 Miles (152,000 km) or 114 Months Dealer Name: Date: Mileage: Dealer Stamp:	**100,000 Miles (160,000 km) or 120 Months** Dealer Name: Date: Mileage: Dealer Stamp:	**105,000 Miles (168,000 km) or 126 Months** Dealer Name: Date: Mileage: Dealer Stamp:
110,000 Miles (176,000 km) or 132 Months Dealer Name: Date: Mileage: Dealer Stamp:	**115,000 Miles (184,000 km) or 138 Months** Dealer Name: Date: Mileage: Dealer Stamp:	**120,000 Miles (192,000 km) or 144 Months** Dealer Name: Date: Mileage: Dealer Stamp:

10 Technical and consumer information

Capacities and recommended fluids/lubricants 10-2
- Fuel information 10-3
- Engine oil and oil filter recommendation 10-5
- Air conditioning system refrigerant and lubricant recommendations 10-6

Specifications 10-7
- Engine 10-7
- Wheels and tires 10-7
- Dimensions and weights 10-8

When traveling or registering in another country 10-8

Vehicle identification 10-8
- Vehicle Identification Number (VIN) plate 10-8
- Vehicle identification number (chassis number) 10-9
- Engine serial number 10-9
- F.M.V.S.S./C.M.V.S.S. certification label 10-9
- Emission control information label 10-10
- Tire and Loading Information label 10-10
- Air conditioner specification label 10-10

Installing front license plate 10-11

Vehicle loading information 10-11
- Terms 10-11
- Vehicle load capacity 10-12
- Securing the load 10-13
- Loading tips 10-13
- Measurement of weights 10-14

Towing a trailer 10-14

Flat towing 10-15
- Flat towing for All-Wheel Drive vehicle (if so equipped) 10-15
- Flat towing for Front-Wheel Drive vehicle (if so equipped) 10-15

Uniform tire quality grading 10-16
- Treadwear 10-16
- Traction AA, A, B and C 10-16
- Temperature A, B and C 10-16

Emission control system warranty 10-17

Reporting safety defects 10-17

Readiness for Inspection/Maintenance (I/M) test 10-18

Event Data Recorders (EDR) 10-19

Owner's manual/service manual order information 10-19

CAPACITIES AND RECOMMENDED FLUIDS/LUBRICANTS

The following are approximate capacities. The actual refill capacities may be a little different. When refilling, follow the procedure instructed in the "8. Do-it-yourself" section to determine the proper refill capacity.

Fluid type			Capacity (approximate)			Recommended Fluids/Lubricants
			Metric Measure	US Measure	Imperial Measure	
Fuel			55 L	14-1/2 gal	12-1/8 gal	· See "Fuel information" (P.10-3).
Engine oil[*1] Drain and refill [*1]: For additional information, see "Changing engine oil and filter" (P.8-6).	With oil filter change		3.8 L	4 qt	3-3/8 qt	· Genuine "Nissan Motor Oil 0W-20 SN" is recommended. · If the above motor oil is not available, use an equivalent motor oil that matches the above grade and viscosity. For additional information, see "Engine oil and oil filter recommendation" (P.10-5).
	Without oil filter change		3.6 L	3-7/8 qt	3-1/8 qt	
Engine coolant	With reservoir	CVT model	8.7 L	9-1/4 qt	7-5/8 qt	· Pre-diluted Genuine NISSAN Long Life Antifreeze/Coolant (blue) or equivalent
		MT model	8.5 L	8-3/8 qt	7 qt	
	Reservoir		0.6 L	5/8 qt	1/2 qt	
Continuously Variable Transmission (CVT) fluid			—	—	—	· Genuine NISSAN CVT Fluid NS-3 · NISSAN recommends using Genuine NISSAN CVT Fluid NS-3 (or equivalent) ONLY in NISSAN CVTs. Do not mix with other fluids. Using fluids that are not equivalent to Genuine NISSAN CVT Fluid NS-3 may damage the CVT. Damage caused by the use of fluids other than as recommended is not covered under NISSAN's New Vehicle Limited Warranty.
Manual Transmission (MT) gear oil			—	—	—	· Manual Transmission Fluid (MTF) TRANSELF NFJ 75W-80 or equivalent · If Manual Transmission Fluid (MTF) TRANSELF NFJ is not available, API GL-4, Viscosity SAE 75W-80 may be used as a temporary replacement. However, use Manual Transmission Fluid (MTF) TRANSELF NFJ as soon as it is available.
Differential gear oil			—	—	—	· Genuine NISSAN Differential Oil Hypoid Super GL-5 80W-90 or equivalent conventional (non-synthetic) oil
Transfer fluid			—	—	—	
Brake and clutch fluid			Refill to the proper oil level according to the instructions in the "8. Do-it-yourself" section.			· Genuine NISSAN Super Heavy Duty Brake Fluid[*2] or equivalent DOT 3 [*2]: Available in mainland U.S.A. through a NISSAN dealer.
Multi-purpose grease			—	—	—	· NLGI No. 2 (Lithium soap base)
Air conditioning system refrigerant			—	—	—	· See "Vehicle identification" (P.10-8) for air conditioner specification label. · HFC-134a (R-134a) or HFO-1234yf (R-1234yf)
Air conditioning system lubricants			—	—	—	· See "Vehicle identification" (P.10-8) for air conditioner specification label. · A/C System Oil ND-OIL8(PAG) or ND-OIL12(PAG) or equivalent
Window washer fluid			4.5 L	1-1/4 gal	1 gal	· Genuine NISSAN Windshield Washer Concentrate Cleaner & Antifreeze or equivalent

FUEL INFORMATION

Use unleaded regular gasoline with an octane rating of at least 87 AKI (Anti-Knock Index) number (Research octane number 91).

CAUTION

- **Using a fuel other than that specified could adversely affect the emission control system, and may also affect warranty coverage.**
- **Under no circumstances should a leaded gasoline be used, because this will damage the three-way catalyst.**
- **Do not use E-15 or E-85 fuel in your vehicle. Your vehicle is not designed to run on E-15 or E-85 fuel. Using E-15 or E-85 fuel in a vehicle not specifically designed for E-15 or E-85 fuel can adversely affect the emission control devices and systems of the vehicle. Damage caused by such fuel is not covered by the NISSAN new vehicle limited warranty.**
- **Do not use fuel that contains the octane booster methylcyclopentadienyl manganese tricarbonyl (MMT). Using fuel containing MMT may adversely affect vehicle performance and vehicle emissions. Not all fuel dispensers are labeled to indicate MMT content, so you may have to consult your gasoline retailer for more details. Note that Federal and California laws prohibit the use of MMT in reformulated gasoline.**
- **U.S. government regulations require ethanol dispensing pumps to be identified by a small, square, orange and black label with the common abbreviation or the appropriate percentage for that region.**

Gasoline specifications

NISSAN recommends using gasoline that meets the World-Wide Fuel Charter (WWFC) specifications where it is available. Many of the automobile manufacturers developed this specification to improve emission control system and vehicle performance. Ask your service station manager if the gasoline meets the WWFC specifications.

Reformulated gasoline

Some fuel suppliers are now producing reformulated gasolines. These gasolines are specially designed to reduce vehicle emissions. NISSAN supports efforts towards cleaner air and suggests that you use reformulated gasoline when available.

Gasoline containing oxygenates

Some fuel suppliers sell gasoline containing oxygenates such as ethanol, MTBE and methanol with or without advertising their presence. NISSAN does not recommend the use of fuels of which the oxygenate content and the fuel compatibility for your vehicle cannot be readily determined. If in doubt, ask your service station manager.

If you use oxygenate-blend gasoline, please take the following precautions as the usage of such fuels may cause vehicle performance problems and/or fuel system damage.

- **The fuel should be unleaded and have an octane rating no lower than that recommended for unleaded gasoline.**
- **If an oxygenate-blend, other than methanol blend is used, it should contain no more than 10% oxygenate. (MTBE may, however, be added**

up to 15%.)

- **E-15 fuel contains more than 10% oxygenate. E-15 fuel will adversely affect the emission control devices and systems of the vehicle and should not be used. Damage caused by such fuel is not covered by the NISSAN new vehicle limited warranty.**
- **If a methanol blend is used, it should contain no more than 5% methanol (methyl alcohol, wood alcohol). It should also contain a suitable amount of appropriate cosolvents and corrosion inhibitors. If not properly formulated with appropriate cosolvents and corrosion inhibitors, such methanol blends may cause fuel system damage and/or vehicle performance problems. At this time, sufficient data is not available to ensure that all methanol blends are suitable for use in NISSAN vehicles.**

If any driveability problems such as engine stalling and difficult hot-starting are experienced after using oxygenate-blend fuels, immediately change to a non-oxygenate fuel or a fuel with a low blend of MTBE.

Take care not to spill gasoline during refueling. Gasoline containing oxygenates can cause paint damage.

E-15 fuel

E-15 fuel is a mixture of approximately 15% fuel ethanol and 85% unleaded gasoline. E-15 can only be used in vehicles designed to run on E- 15 fuel. Do not use E-15 in your vehicle. U.S. government regulations require fuel ethanol dispensing pumps to be identified with small, square, orange and black label with the common abbreviation or the appropriate percentage for that region.

E-85 fuel

E-85 fuel is a mixture of approximately 85% fuel ethanol and 15% unleaded gasoline. E-85 can only be used in a Flexible Fuel Vehicle (FFV). Do not use E-85 fuel in your vehicle. U.S. government regulations require fuel ethanol dispensing pumps to be identified by a small, square, orange and black label with the common abbreviation or the appropriate percentage for that region.

Fuel containing MMT

MMT, or methylcyclopentadienyl manganese tricarbonyl, is an octane boosting additive. NISSAN does not recommend the use of fuel containing MMT. Such fuel may adversely affect vehicle performance, including the emissions control system. Note that while some fuel pumps label MMT content, not all do, so you may have to consult your gasoline retailer for more details.

Aftermarket fuel additives

NISSAN does not recommend the use of any aftermarket fuel additives (for example, fuel injector cleaner, octane booster, intake valve deposit removers, etc.) which are sold commercially. Many of these additives intended for gum, varnish or deposit removal may contain active solvent or similar ingredients that can be harmful to the fuel system and engine.

Octane rating tips

Using unleaded gasoline with an octane rating lower than recommended can cause persistent, heavy "spark knock". (Spark knock is a metallic rapping noise.) If severe, this can lead to engine damage. If you detect a persistent heavy spark knock even when using gasoline of the stated octane rating, or if you hear steady spark knock while holding a steady speed on level roads, it is recommended you have a NISSAN dealer correct the condition. Failure to correct the condition is misuse of the vehicle, for which NISSAN is not responsible.

Incorrect ignition timing will result in spark knock, after-run and/or overheat-

ing, which may cause excessive fuel consumption or engine damage. If any of the above symptoms are encountered, have your vehicle checked. It is recommended you visit a NISSAN dealer for servicing.

However, now and then you may notice light spark knock for a short time while accelerating or driving up hills. This is not a cause for concern, because you get the greatest fuel benefit when there is light spark knock for a short time under heavy engine load.

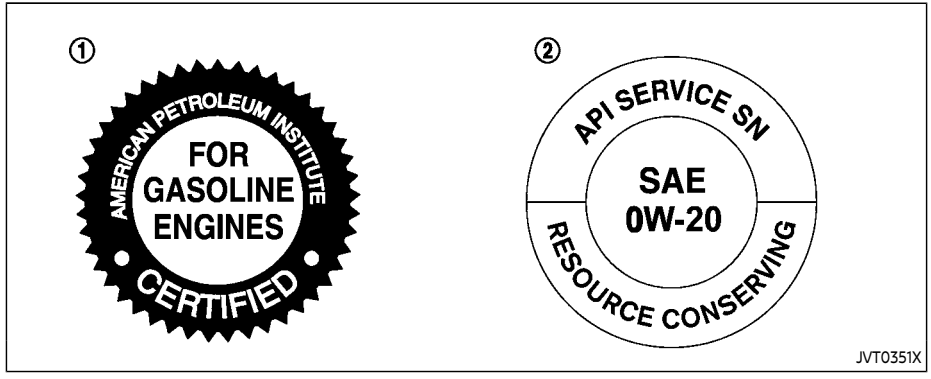

① API certification mark
② API service symbol

ENGINE OIL AND OIL FILTER RECOMMENDATION

Selecting the correct oil

It is essential to choose the correct grade, quality, and viscosity engine oil to ensure satisfactory engine life and performance, see "Capacities and recommended fluids/lubricants" (P.10-2). NISSAN recommends the use of an energy conserving oil in order to improve fuel economy.

Select only engine oils that meet the American Petroleum Institute (API) certification or International Lubricant Standardization and Approval Committee (ILSAC) certification and SAE viscosity standard. These oils have the API certification mark on the front of the container. Oils which do not have the specified quality label should not be used as they could cause engine damage.

Oil additives

NISSAN does not recommend the use of oil additives. The use of an oil additive is not necessary when the proper oil type is used and maintenance intervals are followed.

Oil which may contain foreign matter or has been previously used should not be used.

Oil viscosity

The engine oil viscosity or thickness changes with temperature. Because of this, it is important to select the engine oil viscosity based on the temperatures at which the vehicle will be operated before the next oil change. Choosing an oil viscosity other than that recommended could cause serious engine damage.

Selecting the correct oil filter

Your new NISSAN vehicle is equipped with a high-quality genuine NISSAN oil filter. When replacing, use a genuine NISSAN oil filter or its equivalent for the reason described in "Change intervals".

Change intervals

The oil and oil filter change intervals for your engine are based on the use of the specified quality oils and filters. Using an engine oil and filter other than the specified quality, or exceeding recommended oil and filter change intervals could reduce engine life. Damage to the engine caused by improper maintenance or use of incorrect oil and filter quality and/or viscosity is not covered by the NISSAN new vehicle limited warranty.

Your engine was filled with a high quality engine oil when it was built. You do not have to change the oil before the first recommended change interval.

AIR CONDITIONING SYSTEM REFRIGERANT AND LUBRICANT RECOMMENDATIONS

The air conditioning system in your NISSAN vehicle must be charged with the specified refrigerant and compressor oil or equivalent. See the air conditioner specification label. (See "Air conditioner specification label" (P.10-10).)

- Type A
  - HFC-134a (R-134a)
  - A/C system oil ND-OIL8(PAG) or equivalent
- Type B
  - HFO-1234yf (R-1234yf)
  - A/C system oil ND-OIL12(PAG) or equivalent

CAUTION

The use of any other refrigerant or oil may cause severe damage to the air conditioning system and may require the replacement of all air conditioner system components.

The refrigerant HFC-134a (R-134a) or HFO-1234yf (R-1234yf) in your NISSAN vehicle will not harm the earth's ozone layer. Although this refrigerant does not affect the earth's atmosphere, certain governmental regulations require the recovery and recycling of any refrigerant during automotive air conditioning system service. A NISSAN dealer has the trained technicians and equipment needed to recover and recycle your air conditioning system refrigerant.

It is recommended you visit a NISSAN dealer when servicing your air conditioning system.

SPECIFICATIONS

ENGINE

Model		MR20DD
Type		Gasoline, 4-cycle, DOHC
Cylinder arrangement		4-cylinder, in-line
Bore × Stroke	in (mm)	3.307 × 3.547 (84.0 × 90.1)
Displacement	cu in (cm^3)	121.86 (1,997)
Firing order		1-3-4-2
Idle speed	rpm	No adjustment is necessary.
Ignition timing (B.T.D.C.)	degree/rpm	
Spark plug	Standard	DILKAR7D11H
Spark plug gap (Normal)	in (mm)	0.043 (1.1)
Camshaft operation		Timing chain

This spark ignition system complies with the Canadian standard ICES-002.

WHEELS AND TIRES

Road wheel

Type	Size	Offset in (mm)
Conventional	16 × 6.5JJ	1.57 (40)
	17 × 7J	1.57 (40)
	19 × 7J	1.57 (40)
Spare	16 × 4T	1.18 (30)

Tire

Type	Size	Pressure PSI (kPa) [Cold]
Conventional	215/65R16 98H	33 (230)
	215/60R17 96H	33 (230)
	225/45R19 92W	35 (240)
Spare	T145/90 D16 106M	60 (420)

DIMENSIONS AND WEIGHTS

Overall length	in (mm)	172.4(4,380)
Overall width	in (mm)	72.3 (1,838)
Overall height	in (mm)	62.5 (1,587) 63.3 (1,607)*
Front tread	in (mm)	62.4 (1,585)
Rear tread	in (mm)	62.2 (1,580)
Wheelbase	in (mm)	104.2 (2,646)
Gross Vehicle Weight Rating (GVWR)	lb (kg)	See the F.M.V.S.S. or C.M.V.S.S. certification label on the driver's side center pillar.
Gross Axle Weight Rating (GAWR)		
Front	lb (kg)	
Rear	lb (kg)	

*: Roof rack equipped model

WHEN TRAVELING OR REGISTERING IN ANOTHER COUNTRY

When planning to travel in another country, you should first find out if the fuel available is suitable for your vehicle's engine.

Using fuel with an octane rating that is too low may cause engine damage. All gasoline vehicles must be operated with unleaded gasoline. Therefore, avoid taking your vehicle to areas where appropriate fuel is not available.

When transferring the registration of your vehicle to another country, state, province or district, it may be necessary to modify the vehicle to meet local laws and regulations.

The laws and regulations for motor vehicle emission control and safety standards vary according to the country, state, province or district; therefore, vehicle specifications may differ.

When any vehicle is to be taken into another country, state, province or district and registered, its modifications, transportation, and registration are the responsibility of the user. NISSAN is not responsible for any inconvenience that may result.

VEHICLE IDENTIFICATION

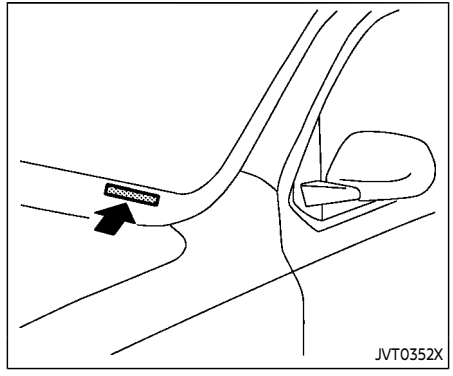

VEHICLE IDENTIFICATION NUMBER (VIN) PLATE

The vehicle identification number plate is attached as shown. This number is the identification for your vehicle and is used in the vehicle registration.

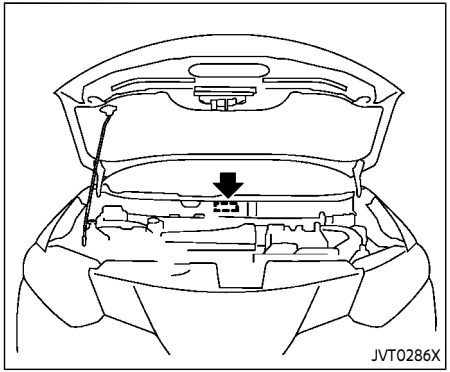

VEHICLE IDENTIFICATION NUMBER (chassis number)

The vehicle identification number is located as shown.

Remove the cover to access the number.

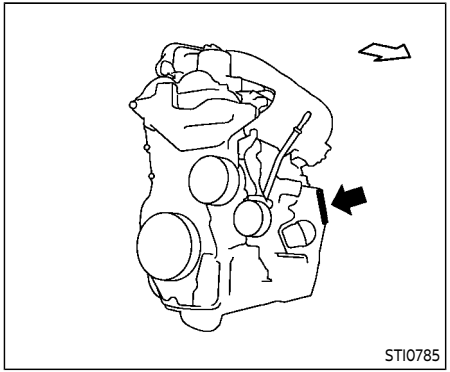

ENGINE SERIAL NUMBER

The number is stamped on the engine as shown.

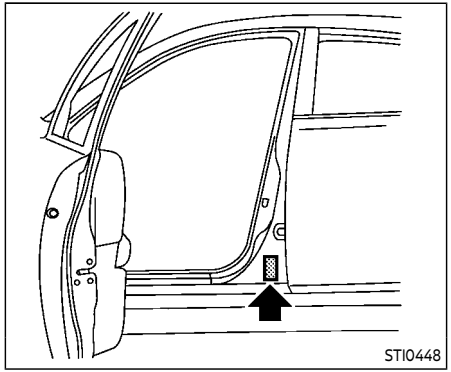

F.M.V.S.S./C.M.V.S.S. CERTIFICATION LABEL

The Federal/Canadian Motor Vehicle Safety Standards (F.M.V.S.S./C.M.V.S.S.) certification label is affixed as shown. This label contains valuable vehicle information, such as: Gross Vehicle Weight Ratings (GVWR), Gross Axle Weight Rating (GAWR), month and year of manufacture, Vehicle Identification Number (VIN), etc. Review it carefully.

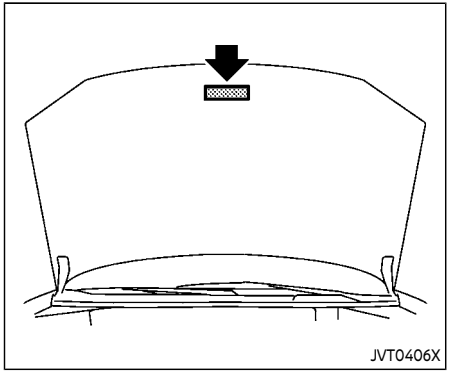

EMISSION CONTROL INFORMATION LABEL

The emission control information label is attached to the underside of the hood as shown.

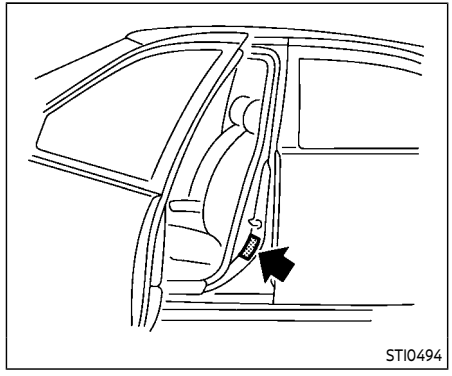

TIRE AND LOADING INFORMATION LABEL

The cold tire pressure is shown on the Tire and Loading Information label affixed to the pillar as shown.

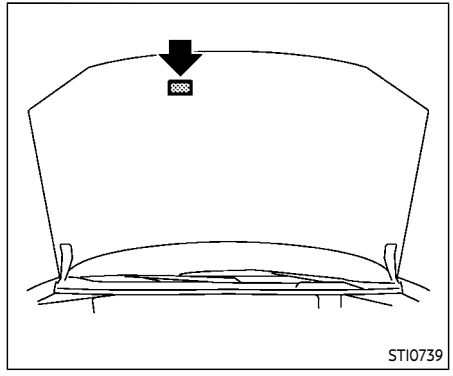

AIR CONDITIONER SPECIFICATION LABEL

The air conditioner specification label is affixed to the underside of the hood as shown.

INSTALLING FRONT LICENSE PLATE

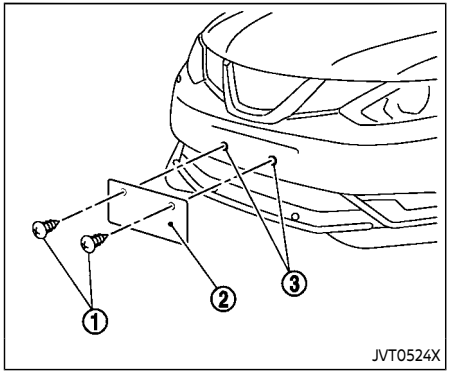

To mount the front license plate ②, attach the licence plate to the location marks (small dimples) ③ of the bumper using the two screws ① provided.

VEHICLE LOADING INFORMATION

WARNING

- **It is extremely dangerous to ride in a cargo area inside the vehicle. In a collision, people riding in these areas are more likely to be seriously injured or killed.**
- **Do not allow people to ride in any area of your vehicle that is not equipped with seats and seat belts.**
- **Be sure everyone in your vehicle is in a seat and using a seat belt properly.**

TERMS

It is important to familiarize yourself with the following terms before loading your vehicle:

- Curb Weight (actual weight of your vehicle) - vehicle weight including: standard and optional equipment, fluids, emergency tools, and spare tire assembly. This weight **does not** include passengers and cargo.
- GVW (Gross Vehicle Weight) - curb weight plus the combined weight of passengers and cargo.
- GVWR (Gross Vehicle Weight Rating) - maximum total combined weight of the unloaded vehicle, passengers, luggage, hitch, trailer tongue load and any other optional equipment. This information is located on the F.M.V.S.S./C.M.V.S.S. label.
- GAWR (Gross Axle Weight Rating) - maximum weight (load) limit specified for the front or rear axle. This information is located on the F.M.V.S.S./C.M.V.S.S. label.
- GCWR (Gross Combined Weight Rating) - The maximum total weight rating of the vehicle, passengers, cargo, and trailer.
- Vehicle Capacity Weight, Load limit, Total load capacity - maximum total weight limit specified of the load (passengers and cargo) for the vehicle. This is the maximum combined weight of occupants and cargo that can

be loaded into the vehicle. If the vehicle is used to tow a trailer, the trailer tongue weight must be included as part of the cargo load. This information is located on the Tire and Loading Information label.

- Cargo capacity - permissible weight of cargo, the subtracted weight of occupants from the load limit.

VEHICLE LOAD CAPACITY

Do not exceed the load limit of your vehicle shown as "The combined weight of occupants and cargo" on the Tire and Loading Information label. Do not exceed the number of occupants shown as "Seating Capacity" on the Tire and Loading Information label.

To get "the combined weight of occupants and cargo", add the weight of all occupants, then add the total luggage weight. Examples are shown in the following illustration.

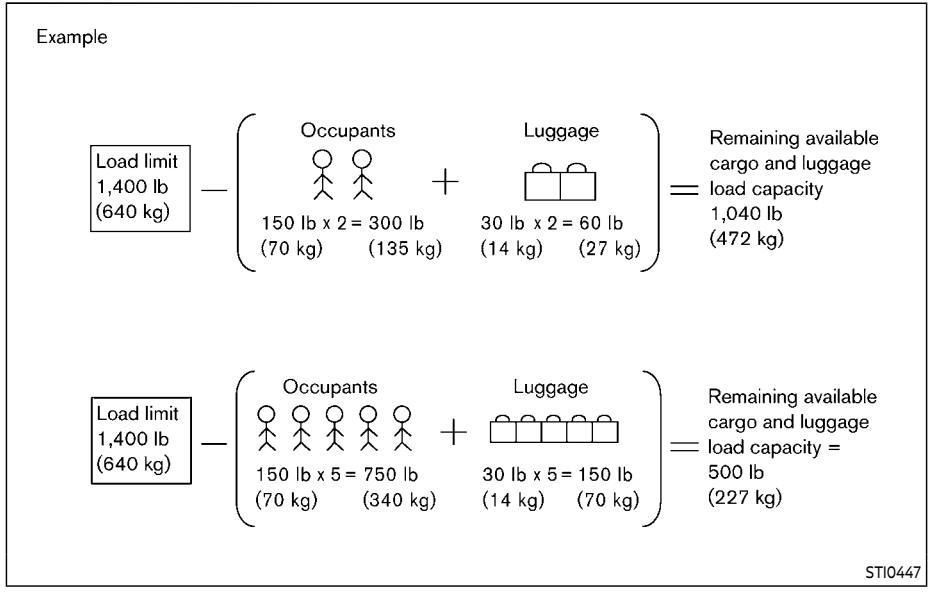

Steps for determining correct load limit

1. Locate the statement "The combined weight of occupants and cargo should never exceed XXX kg or XXX lbs" on your vehicle's placard.
2. Determine the combined weight of the driver and passengers that will be riding in your vehicle.
3. Subtract the combined weight of the driver and passengers from XXX kg or XXX lbs.

4. The resulting figure equals the available amount of cargo and luggage load capacity. For example, if the XXX amount equals 1400 lbs. and there will be five 150 lb. passengers in your vehicle, the amount of available cargo and luggage load capacity is 650 lbs. (1400 – 750 (5 x 150) = 650 lbs) or (640 – 340 (5 x 70) = 300 kg.)
5. Determine the combined weight of luggage and cargo being loaded on the vehicle. That weight may not safely exceed the available cargo and luggage load capacity calculated in Step 4.

Before driving a loaded vehicle, confirm that you do not exceed the Gross Vehicle Weight Rating (GVWR) or the Gross Axle Weight Rating (GAWR) for your vehicle. (See "Measurement of weights" (P.10-14).)

Also check tires for proper inflation pressures. See the Tire and Loading Information label.

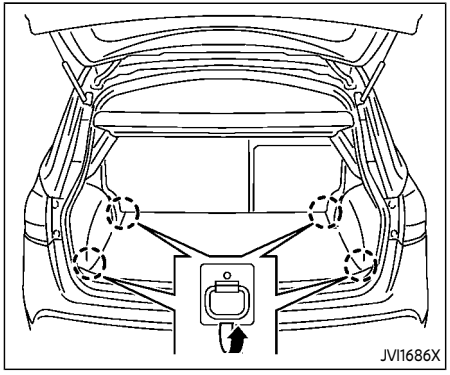

SECURING THE LOAD

There are luggage hooks located in the cargo area as shown. The hooks can be used to secure cargo with ropes or other types of straps.

Do not apply a total load of more than 22 lbs. (10 kg) to a single metal floor hook when securing cargo.

WARNING

- **Properly secure all cargo with ropes or straps to help prevent it from sliding or shifting. Do not place cargo higher than the seatbacks. In a sudden stop or collision, unsecured cargo could cause personal injury.**
- **The child restraint top tether strap may be damaged by contact with items in the cargo area. Secure any items in the cargo area. Your child could be seriously injured or killed in a collision if the top tether strap is damaged.**
- **Do not load your vehicle any heavier than the GVWR or the maximum front and rear GAWRs. If you do, parts of your vehicle can break, tire damage could occur, or it can change the way your vehicle handles. This could result in loss of control and cause personal injury.**

LOADING TIPS

- The GVW must not exceed GVWR or GAWR as specified on the F.M.V.S.S./C.M.V.S.S. certification label.
- Do not load the front and rear axle to the GAWR. Doing so will exceed the GVWR.

WARNING

- **Properly secure all cargo with ropes or straps to help prevent it from sliding or shifting. Do not place cargo higher than the seatbacks. In a sudden stop or collision, unsecured cargo could cause personal injury.**
- **Do not load your vehicle any heavier than the GVWR or the maximum front and rear GAWRs. If you do, parts of your vehicle can break, tire damage could occur, or it can change the way your vehicle handles. This could result in loss of control and cause personal injury.**
- **Overloading not only can shorten the life of your vehicle and the tire, but can cause unsafe vehicle handling and longer braking distances. This may cause a premature tire failure, which could result in a serious accident and personal injury. Failures caused by overloading are not covered by the vehicle's warranty.**

MEASUREMENT OF WEIGHTS

Secure loose items to prevent weight shifts that could affect the balance of your vehicle. When the vehicle is loaded, drive to a scale and weigh the front and the rear wheels separately to determine axle loads. Individual axle loads should not exceed either of the Gross Axle Weight Ratings (GAWR). The total of the axle loads should not exceed the Gross Vehicle Weight Rating (GVWR). These ratings are given on the vehicle certification label. If weight ratings are exceeded, move or remove items to bring all weights below the ratings.

TOWING A TRAILER

Do not tow a trailer with your vehicle.

FLAT TOWING FOR ALL-WHEEL DRIVE VEHICLE (if so equipped)

Towing your vehicle with all four wheels on the ground is sometimes called flat towing. This method is sometimes used when towing a vehicle behind a recreational vehicle, such as a motor home.

CAUTION

- **Failure to follow these guidelines can result in severe transmission damage.**
- **Never flat tow your All-Wheel Drive (AWD) vehicle.**
- **DO NOT tow your All-Wheel Drive (AWD) vehicle with any wheels on the ground. Doing so may cause serious and expensive damage to the powertrain.**
- **For emergency towing procedures refer to "Towing recommended by NISSAN" (P.6-14).**

FLAT TOWING FOR FRONT-WHEEL DRIVE VEHICLE (if so equipped)

Towing your vehicle with all four wheels on the ground is sometimes called flat towing. This method is sometimes used when towing a vehicle behind a recreational vehicle, such as a motor home.

CAUTION

- **Failure to follow these guidelines can result in severe transmission damage.**
- **Whenever flat towing your vehicle, always tow forward, never backward.**
- **Never tow your front wheel drive vehicle with the front tires on the ground. Doing so may cause serious and expensive damage to the powertrain.**
- **DO NOT tow your front wheel drive Continuously Variable Transmission (CVT) vehicle with all four wheels on the ground (flat towing). Doing so WILL DAMAGE internal transmission parts due to lack of transmission lubrication.**
- **For emergency towing procedures refer to "Towing recommended by NISSAN" in the "In case of emergency" section of this manual.**

Continuously Variable Transmission (CVT)

To tow a vehicle equipped with a CVT, an appropriate vehicle dolly **MUST** be placed under the towed vehicle's drive wheels. **Always** follow the dolly manufacturer's recommendations when using their product.

Manual Transmission (MT)

- Always tow with the Manual Transmission in Neutral.
- Your vehicle speed should never exceed 70 MPH (112 km/h) when flat towing your vehicle.
- After towing 500 miles, start and idle the engine with the transmission in Neutral for two minutes. Failure to idle the engine after every 500 miles of towing may cause damage to the transmission's internal parts.

UNIFORM TIRE QUALITY GRADING

DOT (Department Of Transportation) Quality Grades: All passenger car tires must conform to federal safety requirements in addition to these grades.

Quality grades can be found where applicable on the tire sidewall between tread shoulder and maximum section width. For example:

Treadwear 200 Traction AA Temperature A

TREADWEAR

The treadwear grade is a comparative rating based on the wear rate of the tire when tested under controlled conditions on a specified government test course. For example, a tire graded 150 would wear one and one-half

(1 1/2) times as well on the government course as a tire graded 100. The relative performance of tires depends upon actual conditions of their use, however, and may depart significantly from the norm due to variations in driving habits, service practices and differences in road characteristics and climate.

TRACTION AA, A, B AND C

The traction grades, from highest to lowest, are AA, A, B and C. Those grades represent the tire's ability to stop on wet pavement as measured under controlled conditions on specified government test surfaces of asphalt and concrete. A tire marked C may have poor traction performance.

WARNING

The traction grade assigned to this tire is based on straight-ahead braking traction tests, and does not include acceleration, cornering, hydroplaning, or peak traction characteristics.

TEMPERATURE A, B AND C

The temperature grades A (the highest), B, and C, representing the tire's resistance to the generation of heat and its ability to dissipate heat when tested under controlled conditions on a specified indoor laboratory test wheel. Sustained high temperature can cause the material of the tire to degenerate and reduce tire life, and excessive temperature can lead to sudden tire failure. The grade C corresponds to a level of performance which all passenger car tires must meet under the Federal Motor Vehicle Safety Standard No. 109. Grades B and A represent higher levels of performance on the laboratory test wheel than the minimum required by law.

WARNING

The temperature grade for this tire is established for a tire that is properly inflated and not overloaded. Excessive speed, under-inflation, or excessive loading, either separately or in combination, can cause heat build-up and possible tire failure.

EMISSION CONTROL SYSTEM WARRANTY

Your vehicle is covered by the following emission warranties.

For USA:

- Emission Defects Warranty
- Emissions Performance Warranty

Details of these warranties may be found with other vehicle warranties in your Warranty Information Booklet which comes with your vehicle. If you did not receive a Warranty Information Booklet, or it has become lost, you may obtain a replacement by writing to:

- Nissan North America, Inc.
  Consumer Affairs Department
  P.O. Box 685003
  Franklin, TN 37068-5003

For Canada:

Emission Control System Warranty

Details of this warranty may be found with other vehicle warranties in your Warranty Information Booklet which comes with your vehicle. If you did not receive a Warranty Information Booklet, or it has become lost, you may obtain a replacement by writing to:

- Nissan Canada Inc.
  5290 Orbitor Drive
  Mississauga, Ontario,
  L4W 4Z5

REPORTING SAFETY DEFECTS

For USA

If you believe that your vehicle has a defect which could cause a crash or could cause injury or death, you should immediately inform the National Highway Traffic Safety Administration (NHTSA) in addition to notifying NISSAN.

If NHTSA receives similar complaints, it may open an investigation, and if it finds that a safety defect exists in a group of vehicles, it may order a recall and remedy campaign. However, NHTSA cannot become involved in individual problems between you, your dealer, or NISSAN.

To contact NHTSA, you may call the Vehicle Safety Hotline toll-free at 1-888- 327-4236 (TTY: 1-800-424-9153); go to http://www.safercar.gov; or write to: Administrator, NHTSA, 400 Seventh Street, SW., Washington, D.C. 20590. You can also obtain other information about motor vehicle safety from http://www.safercar.gov.

You may notify NISSAN by contacting our Consumer Affairs Department, toll-free, at 1-800-NISSAN-1.

For Canada

If you believe that your vehicle has a defect which could cause a crash or could cause injury or death, you should immediately inform Transport Canada in addition to notifying NISSAN.

If Transport Canada receives complaints, it may open an investigation, and if it finds that a safety defect exists in a group of vehicles, it may request that NISSAN conduct a recall campaign. However, Transport Canada cannot become involved in individual problems between you, your dealer, or NISSAN.

You may contact Transport Canada's Defect Investigations and Recalls Division toll free at 1-800-333-0510. You may also report safety defects online at: https://wwwapps.tc.gc.ca/Saf-Sec-Sur/7/PCDB-BDPP/fc-cp.aspx?lang=eng (English speakers) or https://

wwwapps.tc.gc.ca/Saf-Sec-Sur/7/PCDB-BDPP/fc-cp.aspx?lang=fra (French speakers).

Additional information concerning motor vehicle safety may be obtained from Transport Canada's Road Safety Information Centre at 1-800-333-0371 or online at www.tc.gc.ca/roadsafety (English speakers) or www.tc.gc.ca/securiteroutiere (French speakers).

To notify NISSAN of any safety concerns please contact our Consumer Information Centre toll free at 1-800-387-0122.

READINESS FOR INSPECTION/ MAINTENANCE (I/M) TEST

WARNING

A vehicle equipped with All-Wheel Drive (AWD) should never be tested using a two wheel dynamometer (such as the dynamometers used by some states for emissions testing), or similar equipment. Make sure you inform test facility personnel that your vehicle is equipped with AWD before it is placed on a dynamometer. Using the wrong test equipment may result in transmission damage or unexpected vehicle movement which could result in serious vehicle damage or personal injury.

Due to legal requirements in some states/areas or provinces, your vehicle may be required to be in what is called the "ready condition" for an Inspection/Maintenance (I/M) test of the emission control system.

The vehicle is set to the "ready condition" when it is driven through certain driving patterns. Usually, the "ready condition" can be obtained by ordinary usage of the vehicle.

If a powertrain system component is repaired or the battery is disconnected, the vehicle may be reset to a "not ready condition". Before taking the I/M test, check the vehicle's inspection/maintenance test readiness condition. Place the ignition switch in the ON position without starting the engine. If the Malfunction Indicator Light (MIL) comes on steady for 20 seconds and then blinks for 10 seconds, the I/M test condition is "not ready". If the MIL does not blink after 20 seconds, the I/M test condition is "ready".

It is recommended you visit a NISSAN dealer to set "ready condition" or to prepare the vehicle for testing.

EVENT DATA RECORDERS (EDR)

This vehicle is equipped with an Event Data Recorder (EDR). The main purpose of an EDR is to record, in certain crash or near crash-like situations, such as an air bag deployment or hitting a road obstacle, data that will assist in understanding how a vehicle's systems performed. The EDR is designed to record data related to vehicle dynamics and safety systems for a short period of time, typically 30 seconds or less. The EDR in this vehicle is designed to record such data as:

- How various systems in your vehicle were operating;
- Whether or not the driver and passenger safety belts were buckled/fastened;
- How far (if at all) the driver was depressing the accelerator and/or brake pedal; and,
- How fast the vehicle was traveling.
- Sounds are not recorded.

These data can help provide a better understanding of the circumstances in which crashes and injuries occur.

NOTE: EDR data are recorded by your vehicle only if a nontrivial crash situation occurs; no data are recorded by the EDR under normal driving conditions and no personal data (e.g. name, gender, age and crash location) are recorded. However, other parties, such as law enforcement, could combine the EDR data with the type of personally identifying data routinely acquired during a crash investigation.

To read data recorded by an EDR, special equipment is required and access to the vehicle or the EDR is needed. In addition to the vehicle manufacturer and NISSAN dealer, other parties, such as law enforcement, that have the special equipment, can read the information if they have access to the vehicle or the EDR. EDR data will only be accessed with the consent of the vehicle owner or lessee or as otherwise required or permitted by law.

OWNER'S MANUAL/SERVICE MANUAL ORDER INFORMATION

Genuine NISSAN Service Manuals for this model year and prior can be purchased. A genuine NISSAN Service Manual is the best source of service and repair information for your vehicle. This manual is the same one used by the factory trained technicians working at a NISSAN dealer. Genuine NISSAN Owner's Manuals can also be purchased.

In the USA:

For current pricing and availability of genuine **NISSAN Service Manuals** contact:

www.nissan-techinfo.com

For current pricing and availability of genuine **NISSAN Owner's Manuals** contact:

1-800-247-5321

In Canada:

To purchase a copy of a genuine NISSAN Service Manual or Owner's Manual for this model year and prior please contact a NISSAN dealer. For the phone number and location of a NISSAN dealer in your area call the NISSAN Information Center at 1-800-387-0122 and a bilingual NISSAN representative will assist you.

MEMO

11 Index

A

ABS (Anti-lock Braking System) 5-107
Active Ride Control 5-112
Advanced air bag system 1-46
Air bag system
Advanced air bag system 1-46
Front passenger air bag and status light 1-48
Front-seat mounted side-impact supplemental air bag system 1-54
Roof-mounted curtain side-impact supplemental air bag system 1-54
Air bag warning labels 1-56
Air bag warning light 1-57, 2-15
Air cleaner housing filter 8-15
Air conditioner
Air conditioner operation 4-30
Air conditioner service 4-37
Air conditioner specification label 10-10
Air conditioning system refrigerant and lubricant recommendations 4-37, 10-6
Alarm, How to stop alarm (see vehicle security system) 2-38
Alcohol, drugs and driving 5-10
Antenna 4-77
Anti-lock Braking System (ABS) 5-107
Anti-lock braking system (ABS) warning light 2-10
Appearance care
Exterior appearance care 7-2
Interior appearance care 7-4
Application download 4-78
Armrest 1-6
Audible reminders 2-17
Audio operation precautions 4-38
Audio system 4-38
Steering wheel audio controls 4-75
Automatic
Door locks 3-7
Automatic air conditioner 4-35
Automatic Emergency Braking (AEB) 5-82
Automatic Emergency Braking (AEB) system warning light 2-12
Automatic Emergency Braking (AEB) with pedestrian detection system 5-89
AUX (Auxiliary) input jack 4-75
Average speed 2-34
Avoiding collision and rollover 5-8

B

Battery 8-11
Battery replacement, Intelligent Key 8-23
Battery replacement, Key fob 8-21
Battery saver system 2-47
Variable voltage control system 8-13
Before starting the engine 5-17
Blind Spot Warning (BSW) 5-42
Bluetooth® Hands-Free Phone System 4-83, 4-93
Booster seats 1-36
Brake
Anti-lock Braking System (ABS) 5-107
Brake and clutch fluid 8-9
Brake system 5-106
Electronic parking brake system warning light 2-12
Parking brake 5-27
Press Brake Pedal warning (for electronic parking brake equipped models) 2-32
Warning light 2-11
Break-in schedule 5-99
Brightness control
Instrument panel 2-9
Bulb check/instrument panel 2-10
Bulb replacement 8-25

C

Capacities and recommended fluids/lubricants 10-2
Car phone or CB radio 4-83
Card holder 2-57
Cargo area 2-55
Catalytic converter, Three way catalyst 5-4
CD/USB memory care and cleaning 4-77
Chassis and body maintenance 9-11
Chassis control 2-35, 5-110
Child restraints 1-20
Booster seats 1-36
LATCH system 1-22
Precautions on child restraints 1-20
Child safety 1-17
Child safety rear door lock 3-7
Chimes, Audible reminders 2-17
Circuit breaker, Fusible link 8-19
Cleaning exterior and interior 7-2, 7-4
Clock 2-36
Clutch fluid 8-9
Cockpit 2-3
Cold weather driving 5-113
Console box 2-56
Console light 2-66

Continuously Variable Transmission (CVT) fluid 8-9
Continuously Variable Transmission (CVT) position indicator 2-9
Control buttons and function 4-3
Controls, Steering wheel audio controls 4-75
Coolant
Capacities and recommended fluids/lubricants 10-2
Changing engine coolant 8-6
Checking engine coolant level 8-5
Corrosion protection 7-7
Cruise control 5-60
Fixed speed cruise control (on ICC system) 5-78
Intelligent Cruise Control (ICC) 5-62
Cup holders 2-54
CVT, Driving with CVT (Continuously Variable Transmission) 5-13, 5-20

D

Daytime Running Lights (DRL) system 2-47
Defroster switch, Rear window and outside mirror defroster switch 2-42
Dimensions and weights 10-8
Display
Vehicle information display 2-18
Drive belt 8-13
Driving
Cold weather driving 5-113
Driving with CVT (Continuously Variable Transmission) 5-20
Driving with manual transmission 5-25
Intelligent 4x4 5-100
On-pavement and off-road driving 5-8
Precautions when starting and driving 5-4
Safety precautions 5-10

E

ECO mode switch 2-52
ECO mode system 5-29
Ambient ECO 5-30
ECO Drive Report 5-31
ECO Pedal Guide function 5-30
Economy, Fuel 5-100
Elapsed time 2-34
Elapsed time and trip odometer 2-34
Electric power steering 5-105
Electric power steering warning light 2-12
Emission control information label 10-10
Emission control system maintenance 9-8
Emission control system warranty 10-17
Engine
Before starting the engine 5-17
Break-in schedule 5-99
Capacities and recommended fluids/lubricants 10-2
Changing engine coolant 8-6
Changing engine oil and filter 8-6
Checking engine coolant level 8-5
Checking engine oil level 8-6
Coolant temperature gauge 2-7
Emergency engine shut off 5-16, 6-3
Engine compartment check locations 8-3
Engine cooling system 8-4
Engine oil 8-6
Engine oil and oil filter recommendation 10-5
Engine oil viscosity 10-6
Engine serial number 10-9
Engine specifications 10-7
Engine start operation indicator (for Continuously Variable Transmission (CVT) models) 2-28
Engine start operation indicator (for Manual Transmission (MT) models) 2-28
If your vehicle overheats 6-11
Starting the engine 5-18, 5-19
Event Data Recorders (EDR) 10-19
Exhaust gas (carbon monoxide) 5-4
Explanation of scheduled maintenance items 9-5

F

F.M.V.S.S./C.M.V.S.S. certification label 10-9
Filter
Air cleaner housing filter 8-15
Changing engine oil and filter 8-6
Flashers (See hazard warning flasher switch) 6-2
Flat tire 6-3
Flat towing 10-15
Floor mat cleaning 7-5
Fluid
Brake and clutch fluid 8-9
Capacities and recommended fluids/lubricants 10-2
Continuously Variable Transmission (CVT) fluid 8-9
Engine coolant 8-4
Engine oil 8-6
Window washer fluid 8-10
FM-AM radio with Compact Disc (CD) player 4-48

FM-AM-SAT radio with Compact Disc (CD) player (Type A) 4-55
FM-AM-SAT radio with Compact Disc (CD) player (Type B) 4-63
Fog light switch 2-48
Front manual seat adjustment 1-3
Front passenger air bag and status light 1-48
Front seat, Front seat adjustment 1-3
Fuel
- Capacities and recommended fluids/lubricants 10-2
- Fuel economy 5-100
- Fuel information 10-3
- Fuel octane rating 10-3
- Fuel-filler cap 3-27
- Fuel-filler door 3-27
- Gauge 2-8

Fuel Efficient Driving Tips 5-99
Fuses 8-18
Fusible links 8-19

G

Gas cap 3-27
Gauge 2-5
- Engine coolant temperature gauge 2-7
- Fuel gauge 2-8
- Odometer 2-6
- Speedometer 2-6
- Tachometer 2-7

General maintenance 9-2
Giving voice commands 4-101
Glove box 2-56

H

Hazard warning flasher switch 6-2
Head restraints/headrests 1-6
Headlights
- Bulb replacement 8-25
- Headlight switch 2-43

Heated seats 2-50
Heated steering wheel 2-49
Heater
- Heater and air conditioner operation 4-30

High beam assist 2-45
Hill start assist system 5-113
Hood release 3-24
Hook
- Luggage hook 2-57

Horn 2-49

I

Ignition switch 5-14
Ignition switch (model without Intelligent Key system) 5-12
Ignition switch positions 5-15
Immobilizer system 2-38
Indicator
- Vehicle information display 2-18

Indicator lights 2-16
Inside mirror 3-31
Inspection/maintenance (I/M) test 10-18
Instrument brightness control 2-9
Instrument panel 2-4
Intelligent 4x4 5-100
Intelligent Around View® Monitor 4-14
Intelligent Auto Headlight system 2-43
Intelligent Cruise Control (ICC) 5-62
Intelligent Cruise Control (ICC) indicator 2-31
Intelligent Engine Brake 5-111
Intelligent Key system 3-11
- Key operating range 3-13
- Key operation 3-14
- Remote keyless operation 3-18

Intelligent Lane Intervention (I-LI) 5-37
Intelligent Trace Control 5-110
Interior light replacement 8-27
Interior light switch 2-65
Interior lights 2-65
ISOFIX child restraint 1-22

J

Jump starting 6-9

K

Key
- Ignition switch (model without Intelligent Key system) 5-12
- Ignition switch positions 5-15

Key positions 5-14
Keyless entry
- (See remote keyless entry system) 3-8
- With Intelligent Key system (See Intelligent Key system) 3-18

Keys 3-2
- For Intelligent Key system 3-11

L

Labels
- Air bag warning labels 1-56
- Air conditioner specification label 10-10

Emission control information label 10-10
Engine serial number 10-9
F.M.V.S.S./C.M.V.S.S. certification label 10-9
Tire and Loading information label 8-31, 10-10
Vehicle identification number (VIN) 10-8
Lane Departure Warning (LDW) 5-32
LATCH system 1-22
License plate, Installing front license plate 10-11
Liftgate
Liftgate release lever 3-26
Operating manual liftgate 3-25
Light
Air bag warning light 1-57
Bulb replacement 8-25
Fog light switch 2-48
Headlight switch 2-43
Headlights bulb replacement 8-25
Indicator lights 2-16
Interior lights 2-65
Map lights 2-66
Replacement 8-25
Room light 2-66
Vanity mirror lights 2-67
Warning/indicator lights and audible reminders 2-10
Lights, Exterior and interior light replacement 8-27
Loading information (See vehicle loading information) 10-11
Lock
Automatic door locks 3-7
Door locks 3-5
Power door lock 3-5
Loose fuel cap warning 3-29
Low tire pressure warning 2-29
Low tire pressure warning (Low tire pressure) 2-29
Low tire pressure warning light 2-13
Low tire pressure warning system (See Tire Pressure Monitoring System (TPMS)) 5-5
Luggage hooks 2-57

M

Maintenance
Battery 8-11
General maintenance 9-2
Inside the vehicle 9-3
Maintenance log 9-14
Maintenance precautions 8-2
Maintenance requirements 9-2
Maintenance schedules 9-6
Maintenance under severe driving conditions 9-13
Outside the vehicle 9-2
Seat belt maintenance 1-16
Standard maintenance 9-7
Maintenance schedules 9-6
Malfunction indicator light (MIL) 2-16
Manual air conditioner and heater 4-31
Manual front seat adjustment 1-3
Manual Transmission (MT) 5-13
Map lights 2-66
Master warning light 2-14
Mechanical key (Intelligent Key system) 3-4
Mechanical key (NISSAN Vehicle Immobilizer System) 3-3
Meters and gauges 2-5
Instrument brightness control 2-9
Mirror
Inside mirror 3-31
Outside mirrors 3-31
Vanity mirror 3-33
Moonroof 2-63
Moving Object Detection (MOD) 4-25
MR20DD engine model 8-4

N

Navigation system voice commands 4-103
New vehicle break-in 5-99
NISSAN Vehicle Immobilizer System 2-38
NISSAN Vehicle Immobilizer System key 3-2
NISSAN Voice Recognition system 4-100
NissanConnect Mobile Apps smartphone integration 4-78

O

Odometer 2-6
Off-road recovery 5-9
Oil
Capacities and recommended fluids/lubricants 10-2
Changing engine oil and filter 8-6
Checking engine oil level 8-6
Engine oil 8-6
Engine oil viscosity 10-6
One Shot Call 4-87, 4-96
Outside air temperature 2-36
Outside mirrors 3-31
Overheat, If your vehicle overheats 6-11
Owner's Manual/Service Manual order information 10-19

P

Panic alarm 3-9, 3-20
Parcel shelf 2-58
Parking
- Brake break-in 5-106
- Parking brake 5-27
- Parking on hills 5-104

Parking brake
- Electronic parking brake warning light 2-12

Phone
- Car phone or CB radio 4-83

Phone and Bluetooth® settings 4-99
Phone settings 4-99
Power
- Electric power steering 5-105
- Power door lock 3-5
- Power outlet 2-53
- Power windows 2-60

Power moonroof 2-63
Precautions
- Audio operation 4-38
- Braking precautions 5-106
- Child restraints 1-20
- Cruise control 5-61
- Driving safety 5-10
- Maintenance 8-2
- On-pavement and off-road driving 5-8
- Seat belt usage 1-10
- SRS 1-40
- When starting and driving 5-4

Push starting 6-11
Push-button ignition switch 5-14

R

Radio 4-38
- Car phone or CB radio 4-83
- Steering wheel audio controls 4-75

Rapid air pressure loss 5-9
Readiness for inspection/maintenance (I/M) test 10-18
Rear Cross Traffic Alert (RCTA) 5-52
Rear door lock, Child safety rear door lock 3-7
Rear seats 1-5
Rear window and outside mirror defroster switch 2-42
Rear window wiper and washer switch 2-41
RearView Monitor 4-8
Recorders, Event data 10-19
Registering in another country 10-8
Registering with NissanConnect Mobile Apps 4-78
Remote engine start 3-22
Remote keyless entry function, For Intelligent Key system 3-18
Remote keyless entry system 3-8
Reporting safety defects 10-17
Roadside assistance program 6-2
Rollover 5-8
Roof
- Moonroof 2-64

Roof rack 2-59
Room light 2-66

S

Safety
- Child seat belts 1-17
- Reporting safety defects 10-17

Seat adjustment
- Front manual seat adjustment 1-3
- Front seats 1-3

Seat belt(s)
- Child safety 1-17
- Infants 1-18
- Injured persons 1-13
- Larger children 1-18
- Precautions on seat belt usage 1-10
- Pregnant women 1-13
- Seat belt cleaning 7-6
- Seat belt extenders 1-16
- Seat belt maintenance 1-16
- Seat belt warning light 1-13, 2-15
- Seat belts 1-10
- Seat belts with pretensioners 1-55
- Shoulder belt height adjustment 1-16
- Small children 1-18
- Three-point type with retractor 1-13

Seat(s)
- Heated seats 2-50
- Seats 1-2

Security system (NISSAN Vehicle Immobilizer System), Engine start 2-38
Security system, Vehicle security system 2-36
Servicing air conditioner 4-37
Shift lever
- Shift lock release 5-24

Shift lock release
- Transmission 5-24

Shifting
- CVT (Continuously Variable Transmission) 5-20
- Manual transmission 5-25

Shoulder belt height adjustment, For front seats 1-16

Siri® Eyes Free 4-79
Soft bottle holders 2-54
Spare tire 8-40, 10-7
Spark plugs 8-14
Speedometer 2-6
SRS
Precautions on SRS 1-40
Standard maintenance 9-7
Starting
Before starting the engine 5-17
Jump starting 6-9
Precautions when starting and driving 5-4
Push starting 6-11
Starting the engine 5-18, 5-19
Status light, Front passenger air bag 1-48
Steering
Electric power steering 5-105
Heated steering wheel 2-49
Steering wheel switch for audio controls 4-75
Tilt/telescopic steering 3-29
Storage 2-54
Sun visors 3-30
Sunglasses holder 2-56
Supplemental air bag warning labels 1-56
Supplemental air bag warning light 1-57, 2-15
Supplemental Restraint System (SRS) 1-40
Switch
Audio control steering wheel switch 4-75
Blind Spot Warning (BSW) switch 2-51
Fog light switch 2-48
Hazard warning flasher switch 6-2
Headlight switch 2-43
Ignition switch 5-12
Intelligent 4x4 LOCK switch 2-52
Intelligent Auto Headlight switch 2-43
Intelligent Lane Intervention (I-LI) switch 2-51
Power door lock switch 3-7
Rear window and outside mirror defroster switch 2-42
Turn signal switch 2-48
Vehicle dynamic control (VDC) off switch 2-52

T

Tachometer 2-7
Temperature gauge, Engine coolant temperature gauge 2-7
Theft (NISSAN Vehicle Immobilizer System), Engine start 2-38
Three-way catalyst 5-4
Tilt/telescopic steering 3-29
Tire pressure, Low tire pressure warning light 2-13
Tires
Flat tire 6-3
Low tire pressure warning system 5-5
Tire and Loading information label 8-31, 10-10
Tire chains 8-36
Tire dressing 7-4
Tire pressure 8-29
Tire pressure monitoring system (TPMS) 5-5, 6-3
Tire rotation 8-37
Types of tires 8-35
Uniform tire quality grading 10-16
Wheel/tire size 10-7
Wheels and tires 8-29
Touch screen 4-4
Towing
Tow truck towing 6-13
Towing a trailer 10-14
TPMS, Tire pressure monitoring system 5-5
TPMS with Easy Fill Tire Alert 5-7
TPMS, Tire pressure warning system 6-3
Trailer towing 10-14
Transmission
Continuously Variable Transmission 5-13
Continuously Variable Transmission (CVT) fluid 8-9
Driving with CVT (Continuously Variable Transmission) 5-20
Driving with manual transmission 5-25
Transmission shift lever lock release 5-24
Transmitter (See remote keyless entry system) 3-8
Transmitter, With Intelligent Key system (See Intelligent Key system) 3-18
Traveling or registering in another country 10-8
Trip computer 2-34
Trip odometer 2-34
Turn signal switch 2-48

U

Underbody cleaning 7-3
Uniform tire quality grading 10-16
USB (Universal Serial Bus) connection port 4-74

V

Vanity mirror 3-33
Vanity mirror lights 2-67
Variable voltage control system 8-13

Vehicle
Dimensions and weights 10-8
Identification number (VIN) 10-8
Loading information 10-11
Recovery (freeing a stuck vehicle) 6-16
Security system 2-36
Vehicle dynamic control (VDC) off switch 2-52
Vehicle dynamic control (VDC) system 5-108
Vehicle information display 2-18
How to use the vehicle information display 2-19
Settings 2-19
Startup display 2-19
Vehicle information display warnings and indicators 2-28
Ventilators 4-29
Voice Prompt Interrupt 4-87, 4-95

W

Warning
Hazard warning flasher switch 6-2
Lights 2-10
Low tire pressure warning 2-29
Tire pressure monitoring system (TPMS) 5-5, 6-3
Vehicle information display 2-18
Warning lights, indicator lights and audible reminders 2-10
Warning labels, Air bag warning labels 1-56
Warning light
Air bag warning light 1-57, 2-15
Anti-lock braking system (ABS) warning light 2-10
Brake warning light 2-11
Electric power steering warning light 2-12
Electronic parking brake system warning light 2-12
Electronic parking brake warning light 2-12
Low tire pressure warning light 2-13
Seat belt warning light 1-13, 2-15
Warranty, Emission control system warranty 10-17
Washer switch
Rear window wiper and washer switch 2-41
Wiper and washer switch 2-39
Washing 7-2
Waxing 7-2
Weights (See dimensions and weights) 10-8
Wheel/tire size 10-7
Wheels and tires 8-29
Care of wheels 7-3
Cleaning aluminum alloy wheels 7-3
Window washer fluid 8-10
Window(s)
Cleaning 7-3
Power windows 2-60
Wiper
Rear window wiper and washer switch 2-41
Rear window wiper blade 8-17
Wiper and washer switch 2-39
Wiper blades 8-16
Wiper and washer switch 2-39

FUEL INFORMATION:

Use unleaded regular gasoline with an octane rating of at least 87 AKI (Anti-Knock Index) number (Research octane number 91).

CAUTION

- **Using a fuel other than that specified could adversely affect the emission control system, and may also affect warranty coverage.**
- **Under no circumstances should a leaded gasoline be used, because this will damage the three-way catalyst.**
- **Do not use E-15 or E-85 fuel in your vehicle. Your vehicle is not designed to run on E-15 or E-85 fuel. Using E-15 or E-85 fuel in a vehicle not specifically designed for E-15 or E-85 fuel can adversely affect the emission control devices and systems of the vehicle. Damage caused by such fuel is not covered by the NISSAN new vehicle limited warranty.**
- **Do not use fuel that contains the octane booster methylcyclopentadienyl manganese tricarbonyl (MMT). Using fuel containing MMT may adversely affect vehicle performance and vehicle emissions. Not all fuel dispensers are labeled to indicate MMT content, so you may have to consult your gasoline retailer for more details. Note that Federal and California laws prohibit the use of MMT in reformulated gasoline.**
- **U.S. government regulations require ethanol dispensing pumps to be identified by a small, square, orange and black label with the common abbreviation or the appropriate percentage for that region.**

For additional information, see “Capacities and recommended fluids/lubricants” (P.10-2).

ENGINE OIL RECOMMENDATION:

Genuine “Nissan Motor Oil 0W-20 SN”

See “Capacities and recommended fluids/lubricants” (P.10-2) for engine oil and oil filter recommendation.

COLD TIRE PRESSURES:

The label is typically located on the driver side center pillar. For additional information, see “Wheels and tires” (P.8-29).

NEW VEHICLE BREAK-IN PROCEDURES RECOMMENDATION:

During the first 1,200 miles (2,000 km) of vehicle use, follow the recommendations outlined in the “Break-in schedule” (P.5-99) of this Owner’s Manual. Follow these recommendations for the future reliability and economy of your new vehicle.

Printing : September 2017
Publication No.: OM18E0 0J11U0
Printed in U.S.A
T00UM-6MA2D

J11-D