ENGINE (DIAGNOSTICS)

EN(DOHC TURBO)

		Page
1.	Basic Diagnostic Procedure	2
2.	Check List for Interview	4
3.	General Description	6
4.	Electrical Components Location	9
5.	Engine Control Module (ECM) I/O Signal	26
6.	Engine Condition Data	30
7.	Transmission Control Module (TCM) I/O Signal	32
8.	Data Link Connector	35
9.	OBD-II General Scan Tool	36
10.	Subaru Select Monitor	38
11.	Read Diagnostic Trouble Code	45
12.	Inspection Mode	46
13.	Clear Memory Mode	49
14.	Compulsory Valve Operation Check Mode	50
15.	Engine Malfunction Indicator Lamp (MIL)	52
16.	Diagnostics for Engine Starting Failure	63
17.	List of Diagnostic Trouble Code (DTC)	80
18.	Diagnostic Procedure with Diagnostic Trouble Code (DTC)	88
19.	General Diagnostic Table	372

GETtheMANUALS.org

1. Basic Diagnostic Procedure

A: PROCEDURE

1. ENGINE

	Step	Check	Yes	No
1	**CHECK ENGINE START FAILURE.** 1)Ask the customer when and how the trouble occurred using the interview check list. <Ref. to EN(DOHC TURBO)-4, CHECK, Check List for Interview.> 2)Start the engine.	Does the engine start?	Go to step **2.**	Inspection using "Diagnostics for Engine Start Failure". <Ref. to EN(DOHC TURBO)-63, Diagnostics for Engine Starting Failure.>
2	**CHECK ILLUMINATION OF CHECK ENGINE MALFUNCTION INDICATOR LAMP (MIL).**	Does CHECK ENGINE malfunction indicator lamp illuminate?	Go to step **3.**	Inspection using "General Diagnostics Table". <Ref. to EN(DOHC TURBO)-372, General Diagnostic Table.>
3	**CHECK INDICATION OF DTC ON DISPLAY.** 1)Turn the ignition switch to OFF. 2)Connect the Subaru Select Monitor or the OBD-II general scan tool to data link connector. 3)Turn the ignition switch to ON and the Subaru Select Monitor or OBD-II general scan tool switch to ON. 4)Read the DTC on the Subaru Select Monitor or OBD-II general scan tool.	Does the Subaru Select Monitor or OBD-II general scan tool indicate DTC?	Record the diagnostic trouble code. Repair the trouble cause. <Ref. to EN(DOHC TURBO)-80, List of Diagnostic Trouble Code (DTC).> Go to step **4.**	Repair the related parts. NOTE: If DTC is not shown on display although the MIL illuminates, perform diagnostics of MIL (CHECK ENGINE malfunction indicator lamp) circuit or combination meter. <Ref. to EN(DOHC TURBO)-52, Engine Malfunction Indicator Lamp (MIL).>
4	**PERFORM THE DIAGNOSIS.** 1)Perform the clear memory mode. <Ref. to EN(DOHC TURBO)-49, Clear Memory Mode.> 2)Perform the inspection mode. <Ref. to EN(DOHC TURBO)-46, Inspection Mode.>	Does the Subaru Select Monitor or OBD-II general scan tool indicate DTC?	Inspect using "Diagnostics Procedure with Diagnostic Trouble Code (DTC)". <Ref. to EN(DOHC TURBO)-88, Diagnostic Procedure with Diagnostic Trouble Code (DTC).>	Complete the diagnosis.

GETtheMANUALS.org

2. AUTOMATIC TRANSMISSION

When the trouble code about automatic transmission is shown on display, carry out the following basic check. After that, carry out the replacement or repair work.

1) ATF level check <Ref. to AT-9, Automatic Transmission Fluid.>
2) Differential gear oil level check <Ref. to AT-11, Differential Gear Oil.>
3) ATF leak check <Ref. to AT-9, Automatic Transmission Fluid.>
4) Differential gear oil leak check <Ref. to AT-11, Differential Gear Oil.>
5) Stall test <Ref. to AT-13, Stall Test.>
6) Line pressure test <Ref. to AT-16, Line Pressure Test.>
7) Transfer clutch pressure test <Ref. to AT-18, Transfer Clutch Pressure Test.>
8) Time lag test <Ref. to AT-15, Time Lag Test.>
9) Road test <Ref. to AT-12, Road Test.>
10) Shift characteristics <Ref. to AT-18, Transfer Clutch Pressure Test.>

GETtheMANUALS.org

2. Check List for Interview

A: CHECK

1. CHECK LIST NO. 1

Check the following items when problem has occurred.

NOTE:
Use copies of this page for interviewing customers.

Customer's name		Engine no.	
Date of sale		Fuel brand	
Date of repair		Odometer reading	km
Vin no.			miles
Weather	❑ Fine ❑ Cloudy ❑ Rainy ❑ Snowy ❑ Various/Others:		
Outdoor temperature	°C (°F)		
	❑ Hot ❑ Warm ❑ Cool ❑ Cold		
Place	❑ Highway ❑ Suburbs ❑ Inner city ❑ Uphill ❑ Downhill ❑ Rough road ❑ Others:		
Engine temperature	❑ Cold ❑ Warming-up ❑ After warming-up ❑ Any temperature ❑ Others:		
Engine speed	rpm		
Vehicle speed	MPH		
Driving conditions	❑ Not affected ❑ At starting ❑ While idling ❑ At racing ❑ While accelerating ❑ While cruising ❑ While decelerating ❑ While turning (RH/LH)		
Headlight	❑ ON/❑ OFF	Rear defogger	❑ ON/❑ OFF
Blower	❑ ON/❑ OFF	Radio	❑ ON/❑ OFF
A/C compressor	❑ ON/❑ OFF	CD/Cassette	❑ ON/❑ OFF
Cooling fan	❑ ON/❑ OFF	Car phone	❑ ON/❑ OFF
Front wiper	❑ ON/❑ OFF	CB	❑ ON/❑ OFF
Rear wiper	❑ ON/❑ OFF		

GETtheMANUALS.org

2. CHECK LIST NO. 2

Check the following items about the vehicle's state when MIL turns on.

NOTE:
Use copies of this page for interviewing customers.

a) Other warning lights or indicators turn on. ❑ Yes/❑ No
❑ Low fuel warning light ❑ Charge indicator light ❑ AT diagnostics indicator light ❑ ABS warning light ❑ Engine oil pressure warning light
b) Fuel level
• Lack of gasoline: ❑ Yes/❑ No • Indicator position of fuel gauge:
c) Intentional connecting or disconnecting of harness connectors or spark plug cords: ❑ Yes/❑ No
• What:
d) Intentional connecting or disconnecting of hoses: ❑ Yes/❑ No
• What:
e) Installing of parts other than genuine parts: ❑ Yes/❑ No
• What: • Where:
f) Occurrence of noise: ❑ Yes/❑ No
• From where: • What kind:
g) Occurrence of smell: ❑ Yes/❑ No
• From where: • What kind:
h) Intrusion of water into engine compartment or passenger compartment: ❑ Yes/❑ No
i) Troubles occurred
❑ Engine does not start. ❑ Engine stalls during idling. ❑ Engine stalls while driving. ❑ Engine speed decreases. ❑ Engine speed does not decrease. ❑ Rough idling ❑ Poor acceleration ❑ Back fire ❑ After fire ❑ No shift ❑ Excessive shift shock

GETtheMANUALS.org

3. General Description

A: CAUTION

1) Airbag system wiring harness is routed near the engine control module (ECM), main relay and fuel pump relay.

CAUTION:
• All Airbag system wiring harness and connectors are colored yellow. Do not use electrical test equipment on these circuit.
• Be careful not to damage the Airbag system wiring harness when servicing the engine control module (ECM), transmission control module (TCM), main relay and fuel pump relay.

2) Never connect the battery in reverse polarity.
• The ECM will be destroyed instantly.
• The fuel injector and other part will be damaged in just a few minutes more.

3) Do not disconnect the battery terminals while the engine is running.
• A large counter electromotive force will be generated in the generator, and this voltage may damage electronic parts such as ECM, etc.

4) Before disconnecting the connectors of each sensor and the ECM, be sure to turn OFF the ignition switch.

5) Poor contact has been identified as a primary cause of this problem. To measure the voltage and/or resistance of individual sensors or all electrical control modules at the harness side connector, use a tapered pin with a diameter of less than 0.64 mm (0.025 in). Do not insert the pin more than 5 mm (0.20 in) into the part.

6) Before removing the ECM from the located position, disconnect two cables on battery.
• Otherwise, the the ECM may be damaged.

CAUTION:
When replacing the ECM, be careful not to use the wrong spec. ECM to avoid any damage on fuel injection system.

7) The connectors to each sensor in the engine compartment and the harness connectors on the engine side and body side are all designed to be waterproof. However, it is still necessary to take care not to allow water to get into the connectors when washing the vehicle, or when servicing the vehicle on a rainy day.

8) Use ECM mounting stud bolts at the body head grounding point when measuring voltage and resistance inside the passenger compartment.

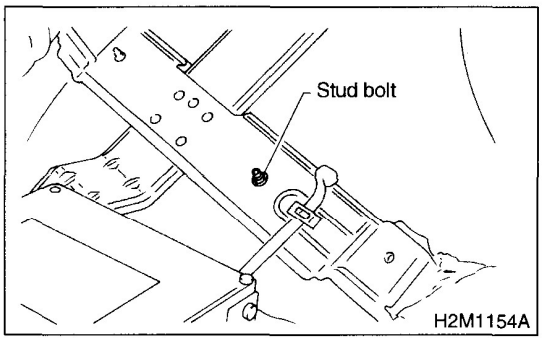

9) Use engine grounding terminal or engine proper as the grounding point to the body when measuring voltage and resistance in the engine compartment.

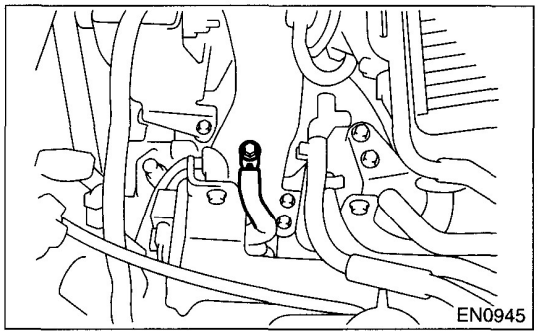

10) Use TCM mounting stud bolts at the body head grounding point when measuring voltage and resistance inside the passenger compartment.

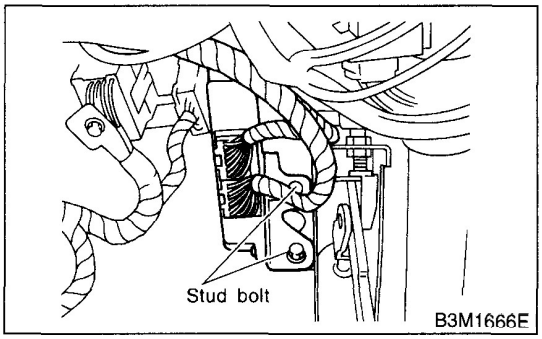

11) Every MFI-related part is a precision part. Do not drop them.

GETtheMANUALS.org

12) Observe the following cautions when installing a radio in MFI equipped models.

CAUTION:
• The antenna must be kept as far apart as possible from the control unit.
(The ECM is located under the steering column, inside of the instrument panel lower trim panel.)
• The antenna feeder must be placed as far apart as possible from the ECM and MFI harness.
• Carefully adjust the antenna for correct matching.
• When mounting a large power type radio, pay special attention to the three items above mentioned.
• Incorrect installation of the radio may affect the operation of the ECM.

13) Before disconnecting the fuel hose, disconnect the fuel pump connector and crank the engine for more than five seconds to release pressure in the fuel system. If engine starts during this operation, run it until it stops.
14) Problems in the electronic-controlled automatic transmission may be caused by failure of the engine, the electronic control system, the transmission proper, or by a combination of these. These three causes must be distinguished clearly when performing diagnostics.
15) Diagnostics should be conducted by rotating with simple, easy operations and proceeding to complicated, difficult operations. The most important thing in diagnostics is to understand the customer's complaint, and distinguish between the three causes.
16) On ABS vehicle, when performing driving test in jacked-up or lifted-up position, sometimes the warning light may be lit, but this is not a malfunction of the system. The reason for this is the speed difference between the front and rear wheels. After diagnosis of engine control system, perform the ABS memory clearance procedure of self-diagnosis system.

B: INSPECTION

Before performing diagnostics, check the following items which might affect engine problems:

1. BATTERY

1) Measure battery voltage and specific gravity of electrolyte.

Standard voltage: 12 V

Specific gravity: Above 1.260

2) Check the condition of the main and other fuses, and harnesses and connectors. Also check for proper grounding.

2. ENGINE GROUNDING

Make sure the engine grounding terminal is properly connected to the engine.

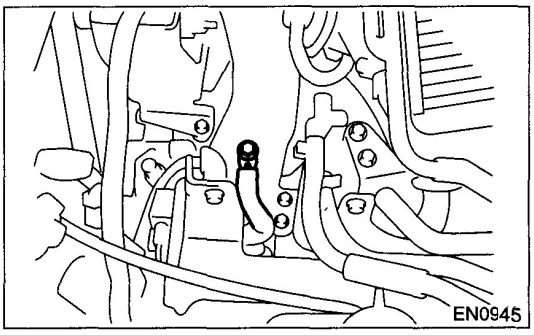

C: NOTE

1. DESCRIPTION

• The on-board diagnostics (OBD) system detects and indicates a fault in various inputs and outputs of the complex electronic control. CHECK ENGINE malfunction indicator lamp (MIL) in the combination meter indicates occurrence of a fault or trouble.
• Further, against such a failure or sensors as may disable the drive, the fail-safe function is provided to ensure the minimal driveability.
• The OBD system incorporated with the vehicles within this engine family complies with Section 1968.1, California Code of Regulations (OBD-II regulation). The OBD system monitors the components and the system malfunction listed in Engine Section which affects on emissions.
• When the system decides that a malfunction occurs, MIL illuminates. At the same time of the MIL illumination or blinking, a diagnostic trouble code (DTC) and a freeze frame engine conditions are stored into on-board computer.
• The OBD system stores freeze frame engine condition data (engine load, engine coolant temperature, fuel trim, engine speed and vehicle speed, etc.) into on-board computer when it detects a malfunction first.
• If the OBD system detects the various malfunctions including the fault of fuel trim or misfire, the OBD system first stores freeze frame engine conditions about the fuel trim or misfire.
• When the malfunction does not occur again for three consecutive driving cycles, MIL is turned off, but DTC remains at on-board computer.
• The OBD-II system is capable of communication with a general scan tool (OBD-II general scan tool) formed by ISO 9141 CARB.

GETtheMANUALS.org

• The OBD-II diagnostics procedure is different from the usual diagnostics procedure. When troubleshooting OBD-II vehicles, connect Subaru Select Monitor or the OBD-II general scan tool to the vehicle.

2. ENGINE AND EMISSION CONTROL SYSTEM

• The Multipoint Fuel Injection (MFI) system is a system that supplies the optimum air-fuel mixture to the engine for all the various operating conditions through the use of the latest electronic technology.
With this system fuel, which is pressurized at a constant pressure, is injected into the intake air passage of the cylinder head. The injection quantity of fuel is controlled by an intermittent injection system where the electro-magnetic injection valve (fuel injector) opens only for a short period of time, depending on the quantity of air required for one cycle of operation. In actual operation, the injection quantity is determined by the duration of an electric pulse applied to the fuel injector and this permits simple, yet highly precise metering of the fuel.
• Further, all the operating conditions of the engine are converted into electric signals, and this results in additional features of the system, such as large improved adaptability, easier addition of compensating element, etc.
The MFI system also has the following features:
- Reduced emission of harmful exhaust gases.
- Reduced in fuel consumption.
- Increased engine output.
- Superior acceleration and deceleration.
- Superior startability and warm-up performance in cold weather since compensation is made for coolant and intake air temperature.

D: PREPARATION TOOL

ILLUSTRATION	TOOL NUMBER	DESCRIPTION	REMARKS
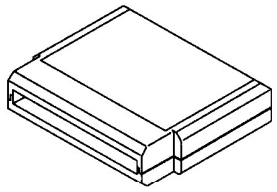 B2M3876	24082AA150 (Newly adopted tool)	CARTRIDGE	Troubleshooting for electrical systems.
 B2M3877	22771AA030	SELECT MONITOR KIT	Troubleshooting for electrical systems. • English: 22771AA030 (Without printer) • German: 22771AA070 (Without printer) • French: 22771AA080 (Without printer) • Spanish: 22771AA090 (Without printer)

GETtheMANUALS.org

4. Electrical Components Location

A: LOCATION

1. ENGINE

• MODULE

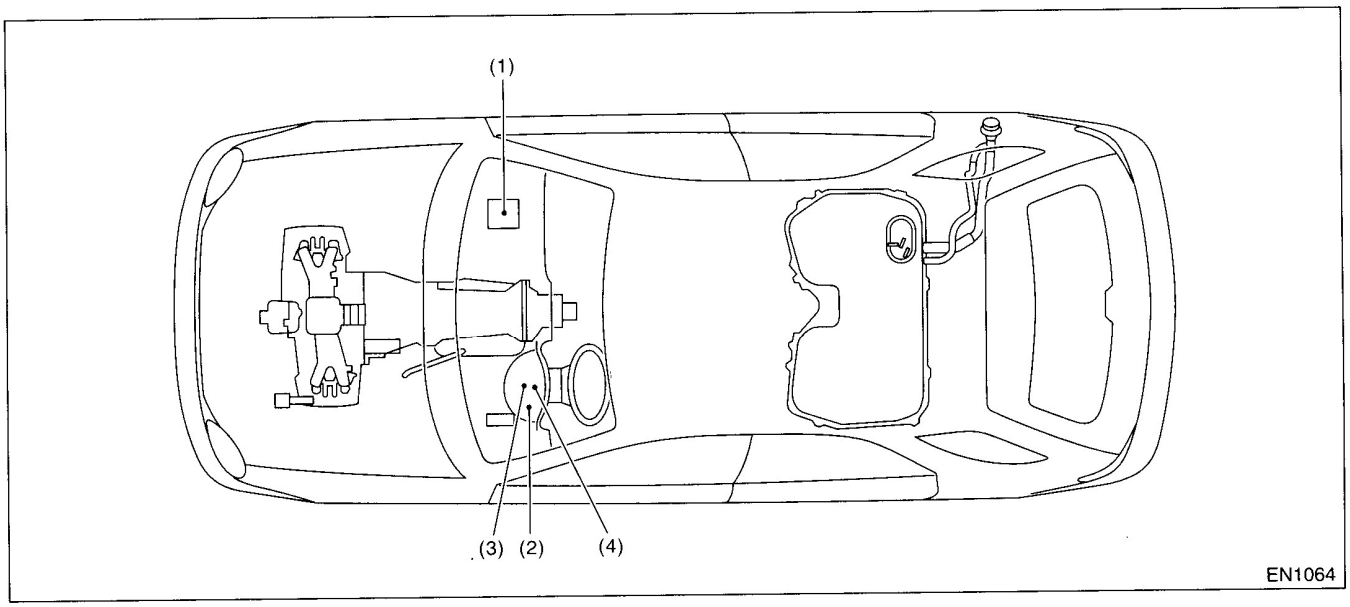

(1) Engine control module (ECM)
(2) CHECK ENGINE malfunction indicator lamp (MIL)
(3) Test mode connector
(4) Data link connector

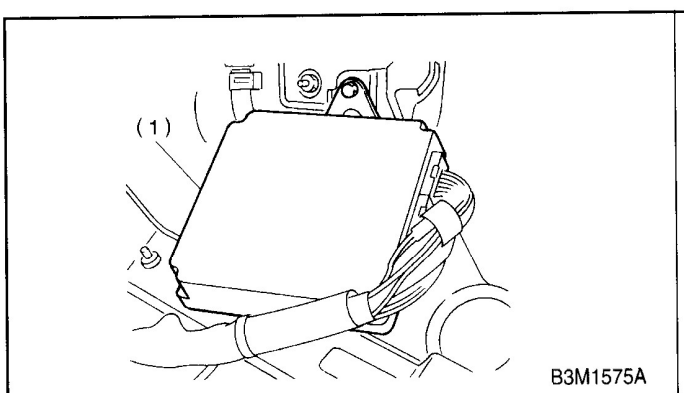

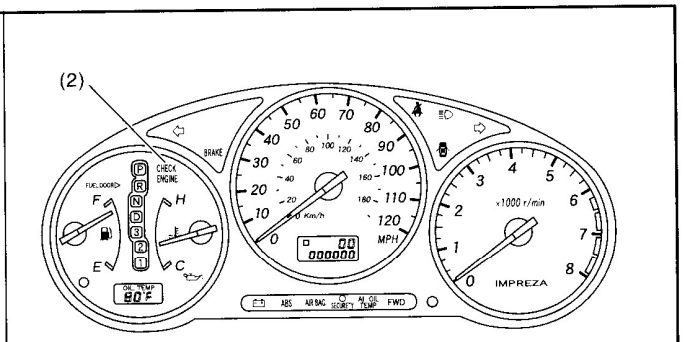

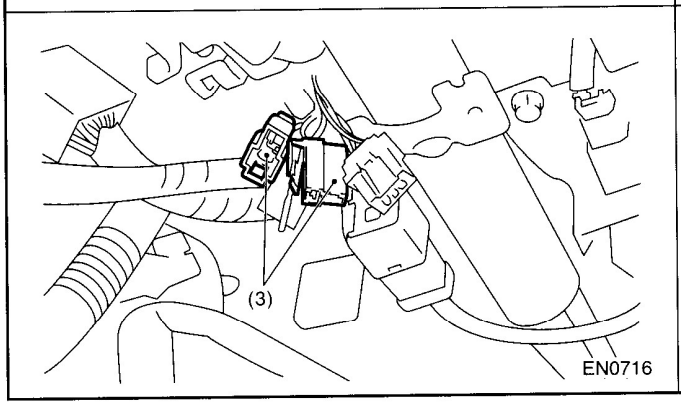

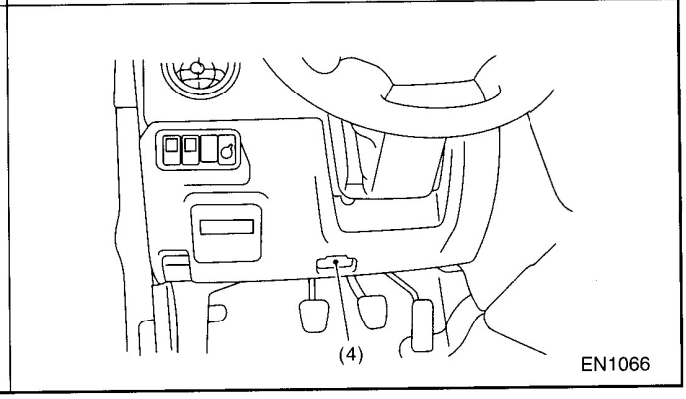

GETtheMANUALS.org

• SENSOR

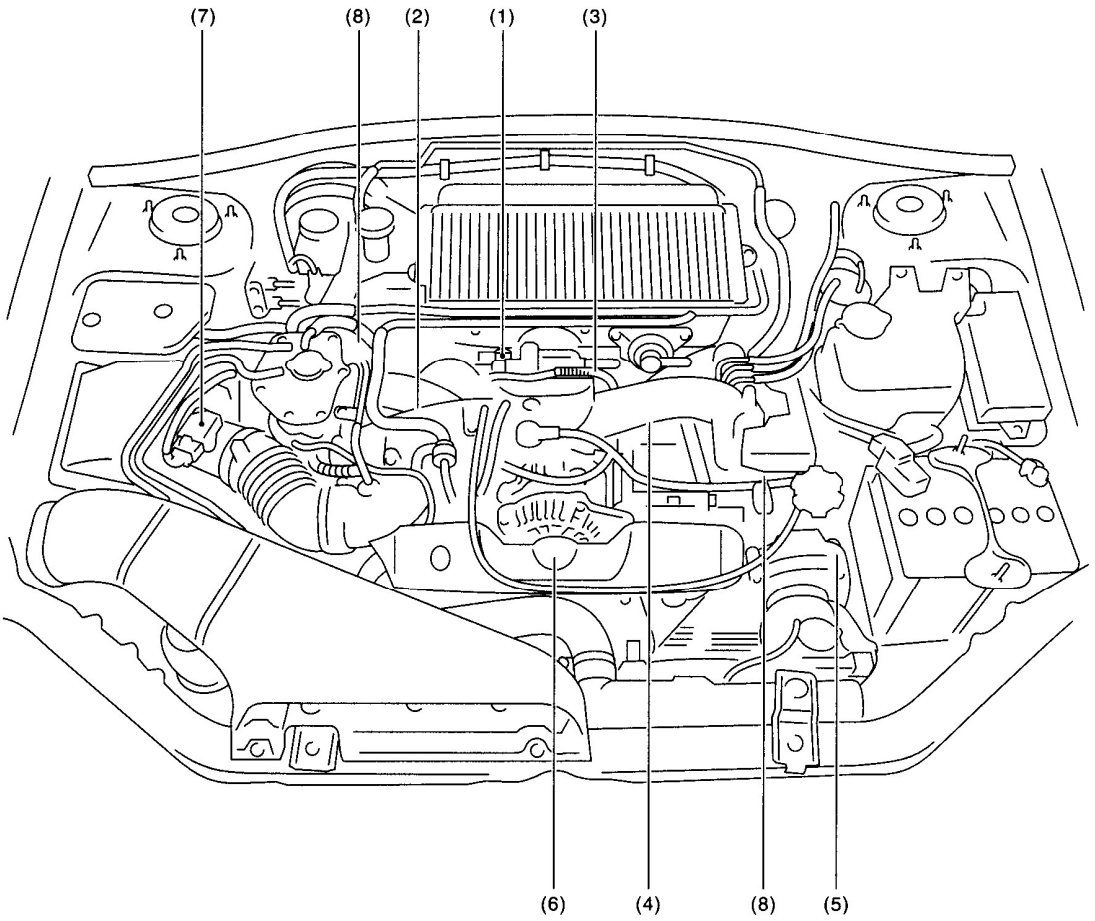

(1) Pressure sensor
(2) Engine coolant temperature sensor
(3) Throttle position sensor
(4) Knock sensor
(5) Camshaft position sensor
(6) Crankshaft position sensor
(7) Mass air flow and intake air temperature sensor
(8) Tumble generator valve position sensor

GETtheMANUALS.org

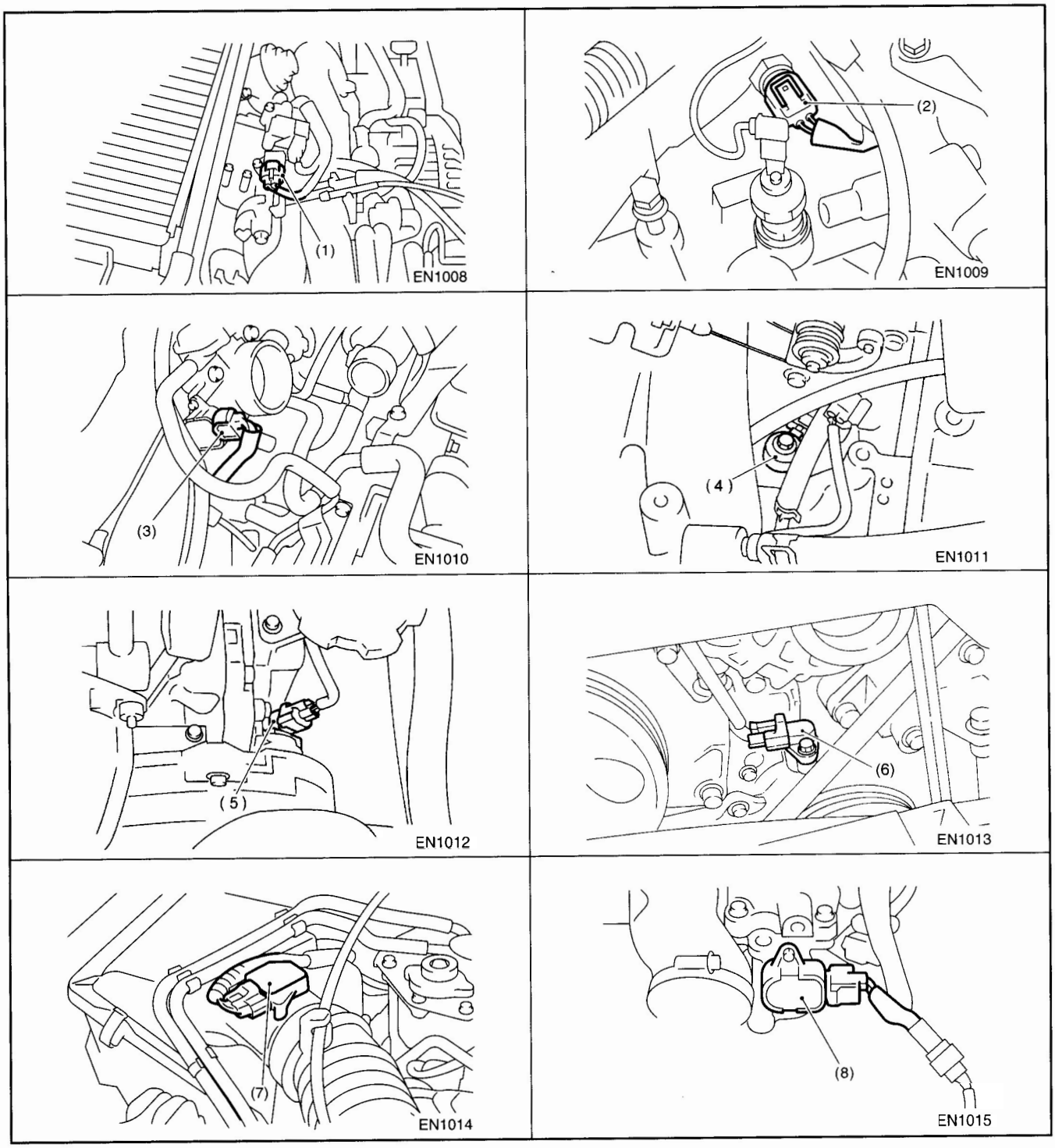

GETtheMANUALS.org

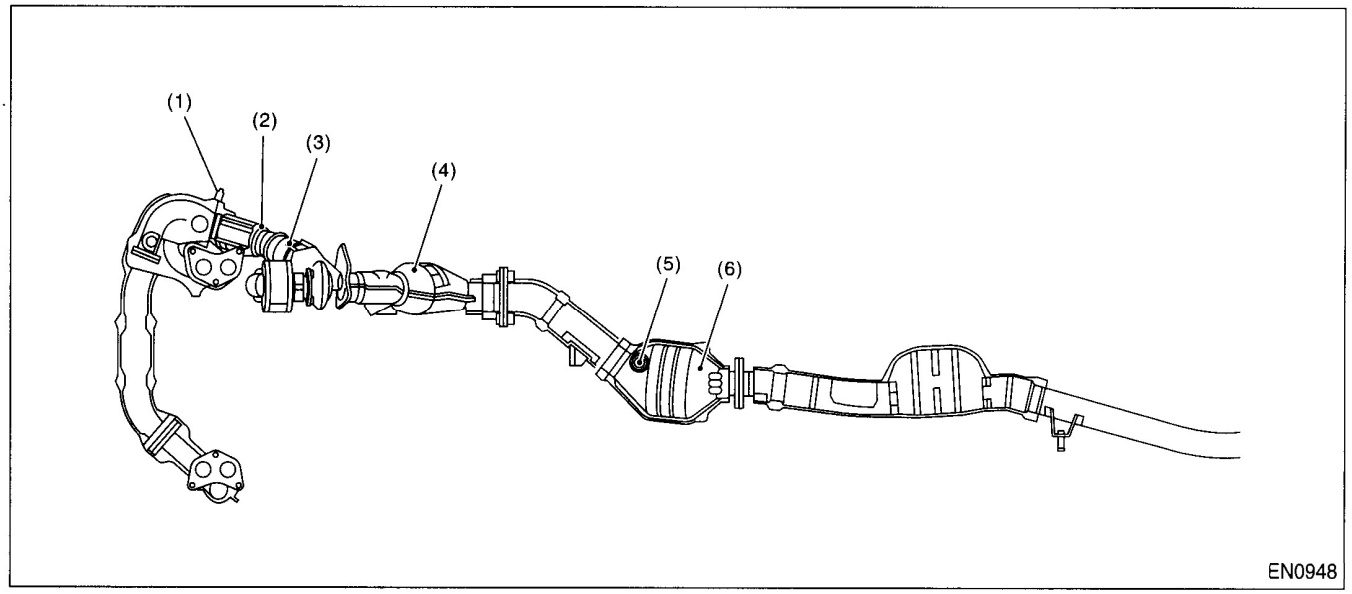

(1) Front oxygen (A/F) sensor
(2) Precatalytic converter
(3) Exhaust temperature sensor
(4) Front catalytic converter
(5) Rear oxygen sensor
(6) Rear catalytic converter

GETtheMANUALS.org

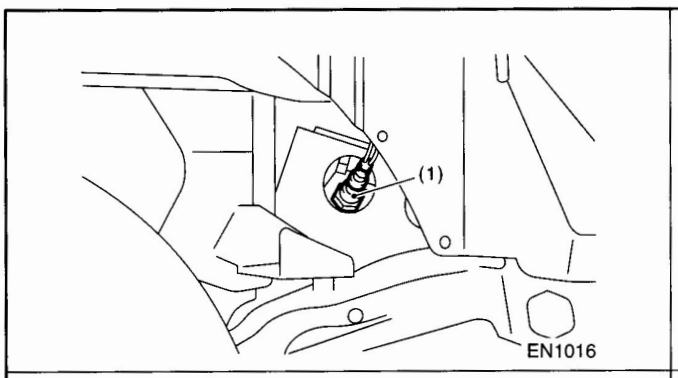

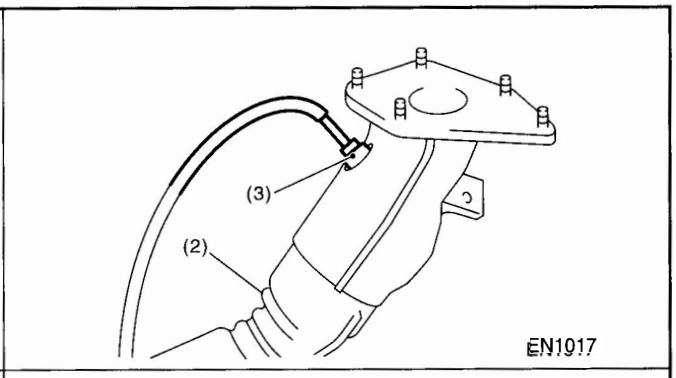

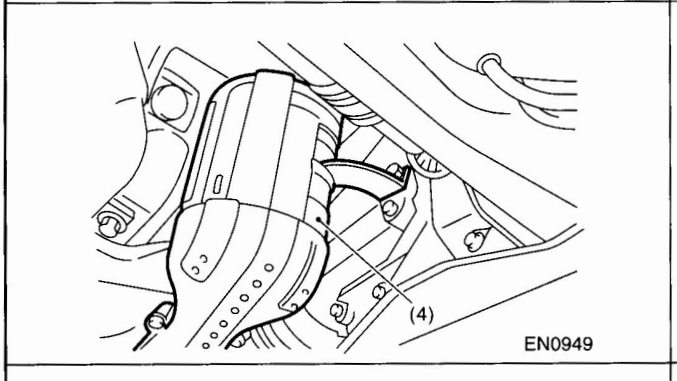

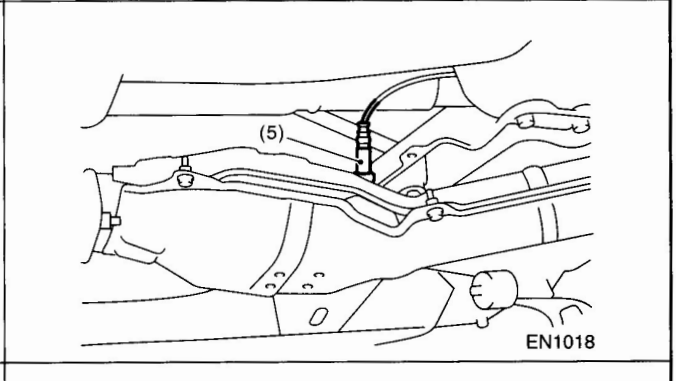

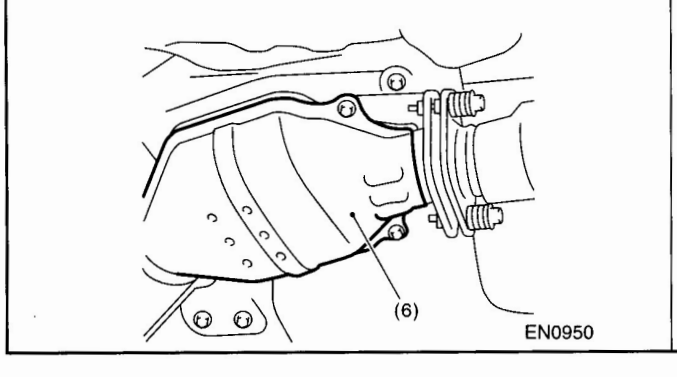

SUBARU

GETtheMANUALS.org

ELECTRICAL COMPONENTS LOCATION

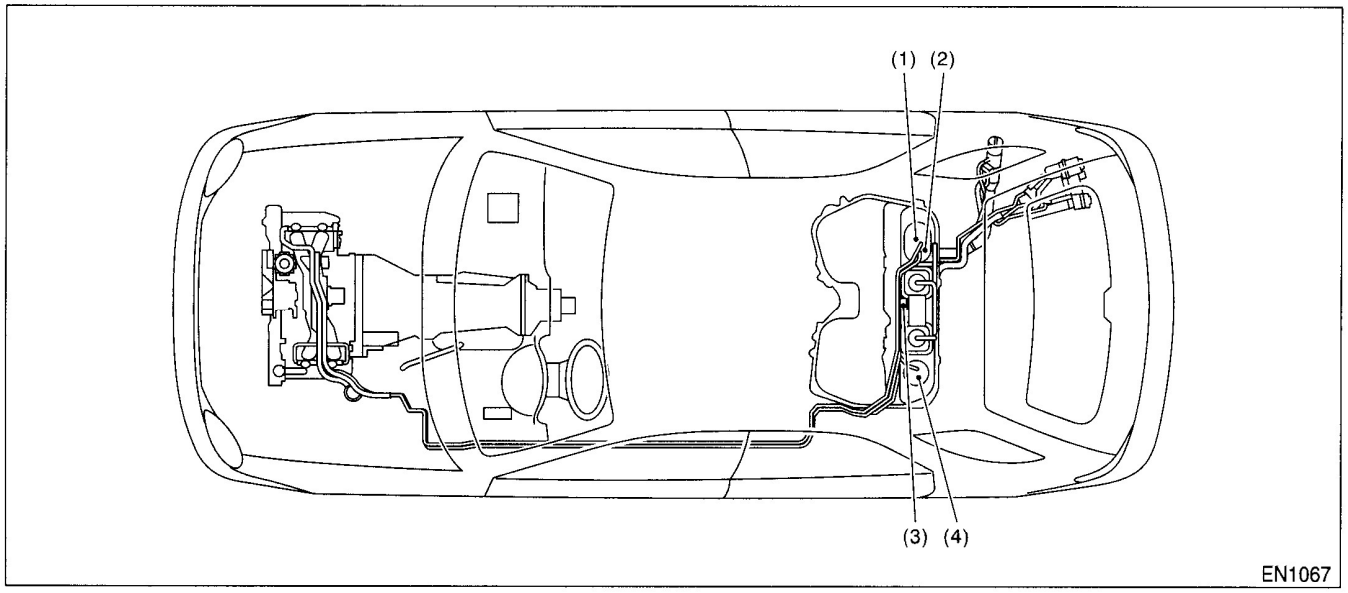

(1) Fuel level sensor
(2) Fuel temperature sensor
(3) Fuel tank pressure sensor
(4) Fuel sub level sensor

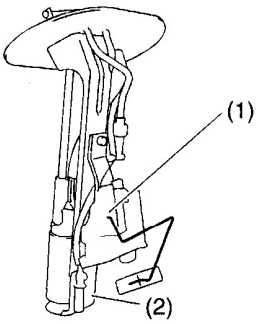

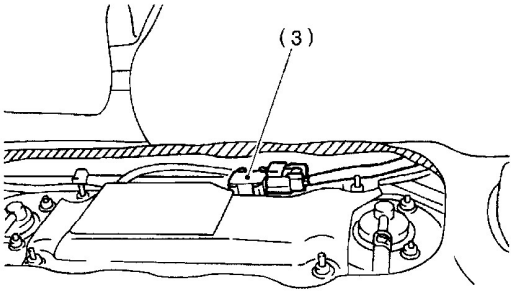

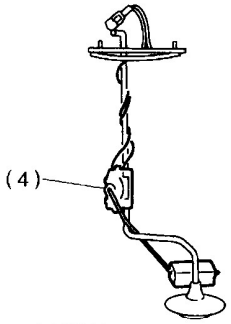

GETtheMANUALS.org

GETtheMANUALS.org

• SOLENOID VALVE, ACTUATOR, EMISSION CONTROL SYSTEM PARTS AND IGNITION SYSTEM PARTS

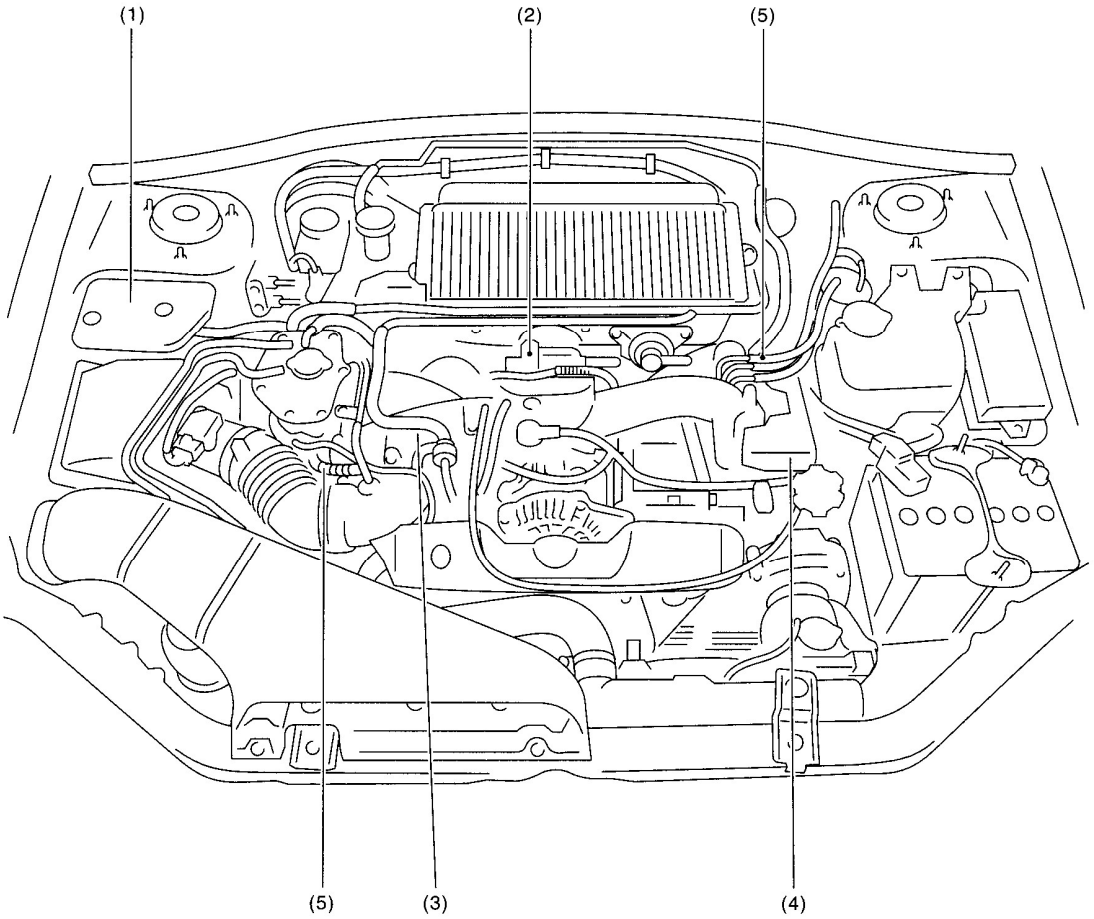

(1) Wastegate control solenoid valve
(2) Idle air control solenoid valve
(3) Purge control solenoid valve
(4) Ignition coil
(5) Tumble generator valve actuator

GETtheMANUALS.org

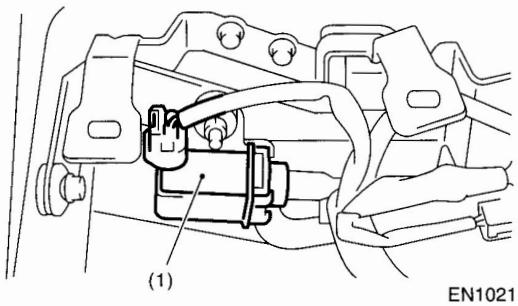

EN1021

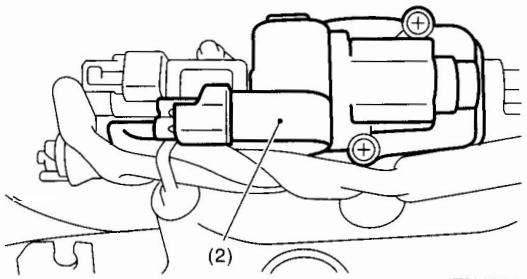

EN1022

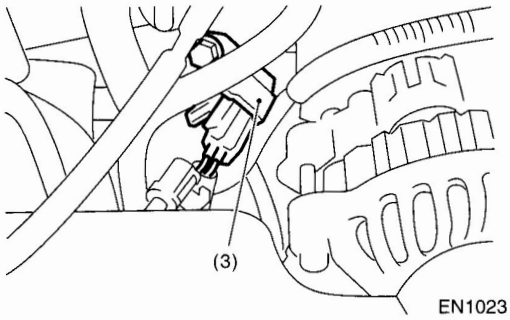

EN1023

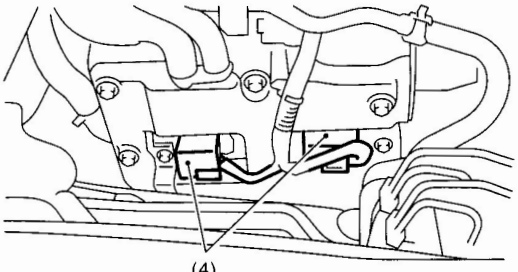

EN1024

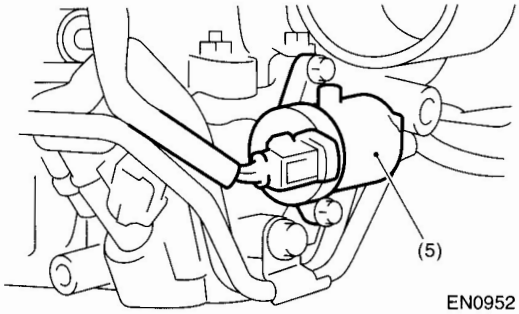

EN0952

SUBARU

GETtheMANUALS.org

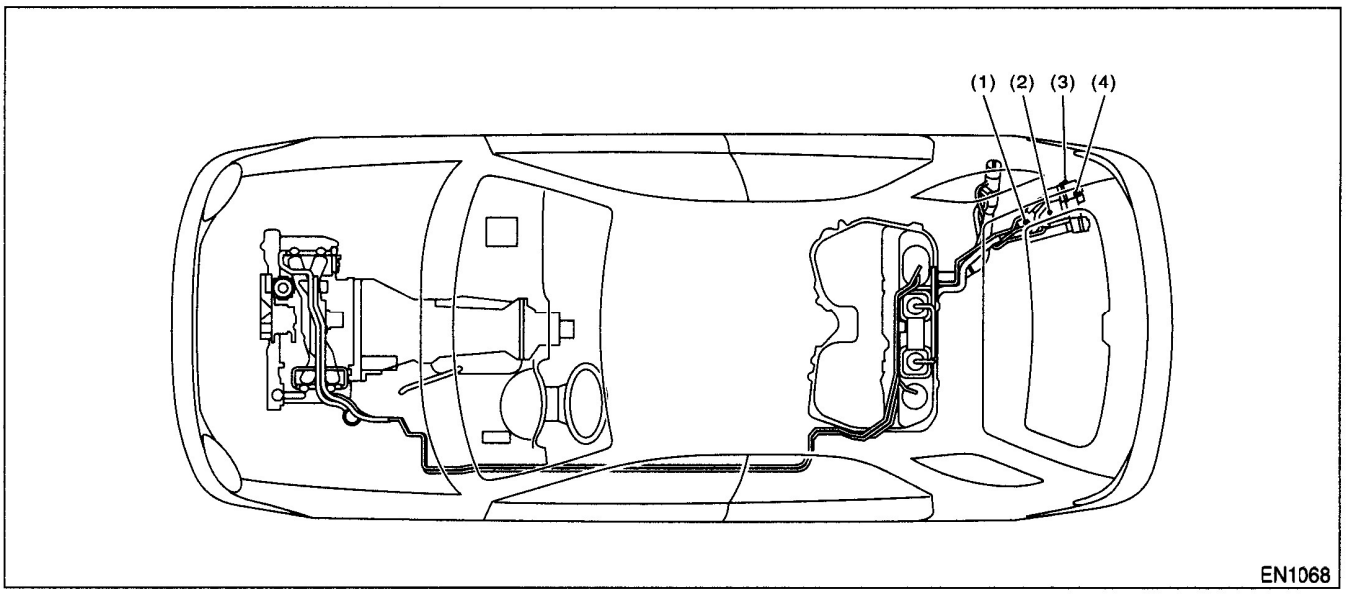

(1) Pressure control solenoid valve
(2) Canister
(3) Drain valve
(4) Drain filter

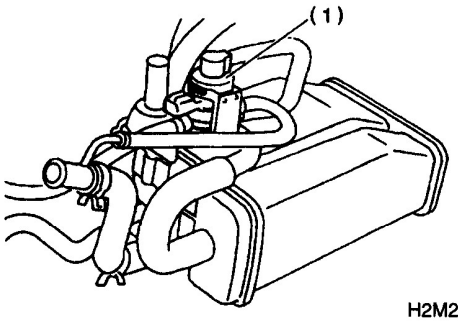

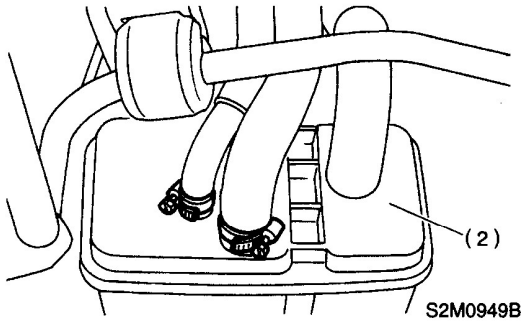

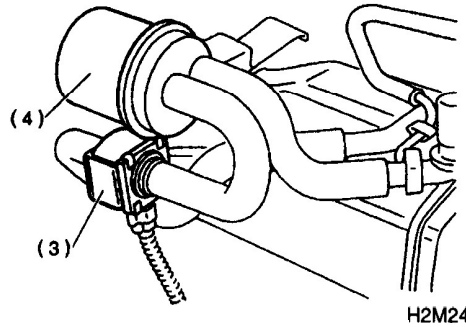

SUBARU

GETtheMANUALS.org

GETtheMANUALS.org

ELECTRICAL COMPONENTS LOCATION

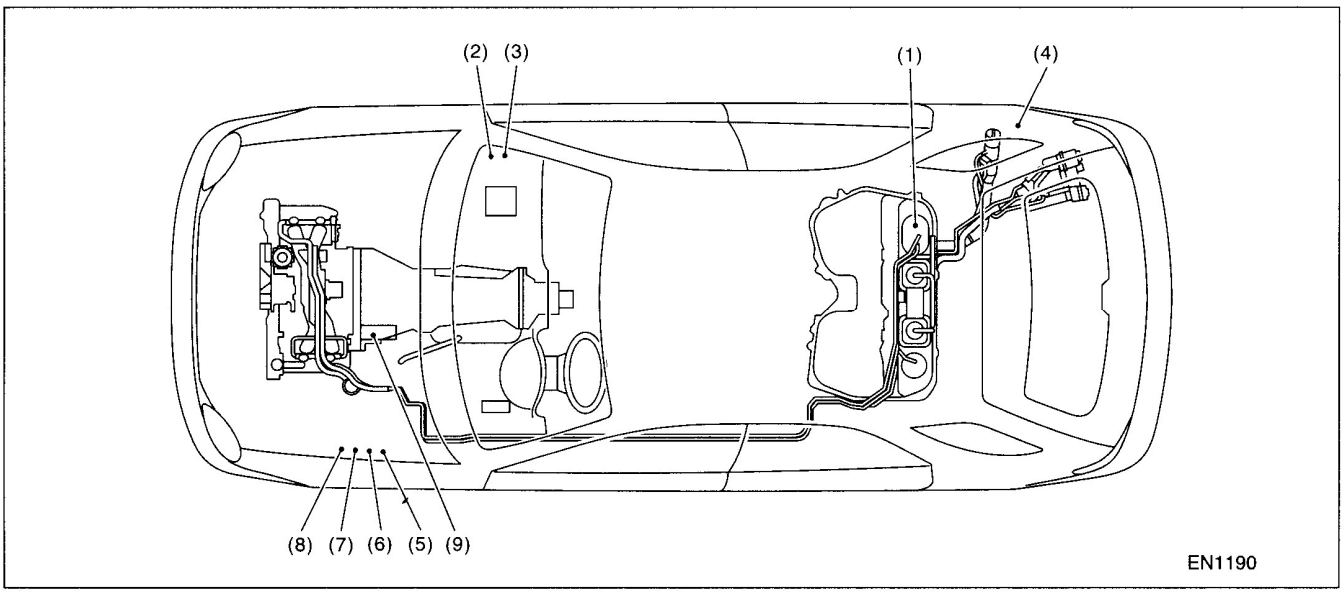

(1) Fuel pump
(2) Main relay
(3) Fuel pump relay
(4) Fuel pump controller
(5) Radiator main fan relay 1
(6) Radiator main fan relay 2
(7) Radiator sub fan relay 1
(8) Radiator sub fan relay 2
(9) Starter

GETtheMANUALS.org

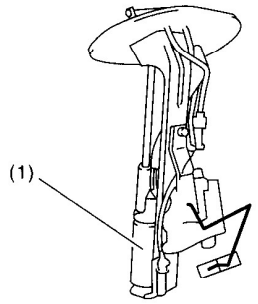

EN1191

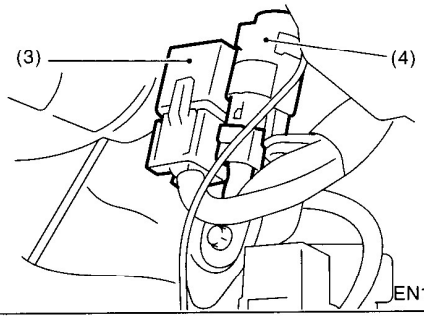

EN1070

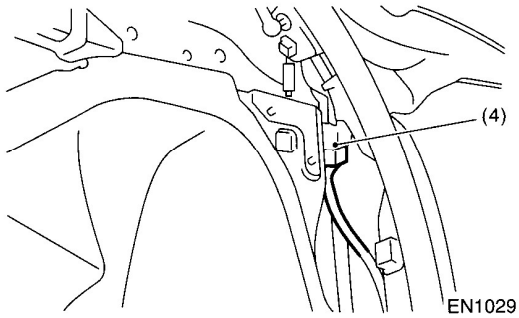

EN1029

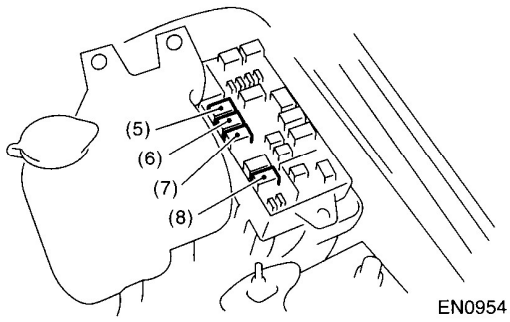

EN0954

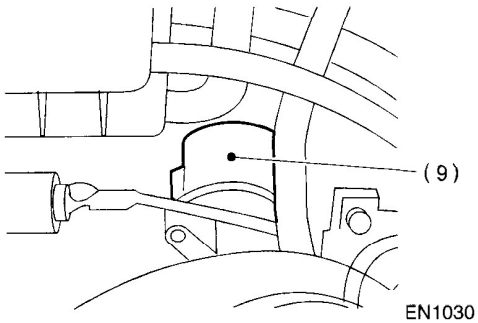

EN1030

SUBARU

GETtheMANUALS.org

2. TRANSMISSION

• Module

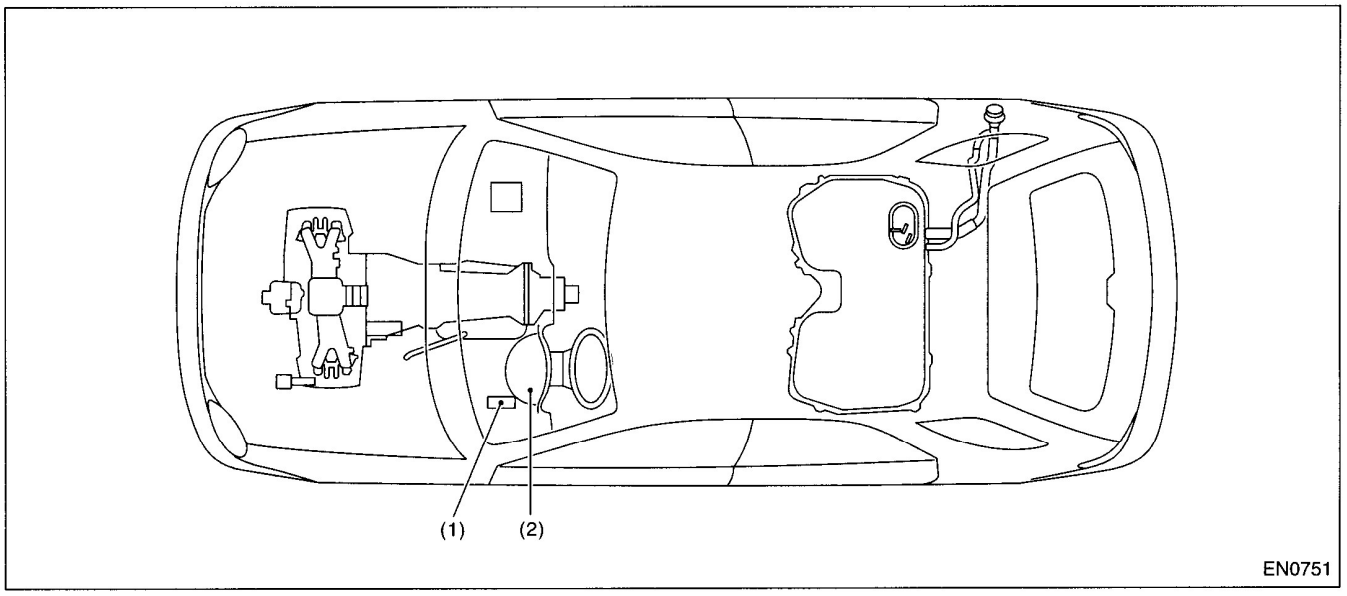

(1) Transmission Control Module (TCM) (for AT vehicles)
(2) AT diagnostic indicator light (for AT vehicles)

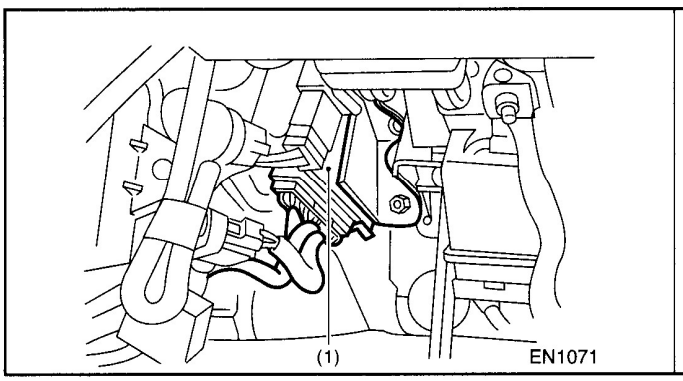

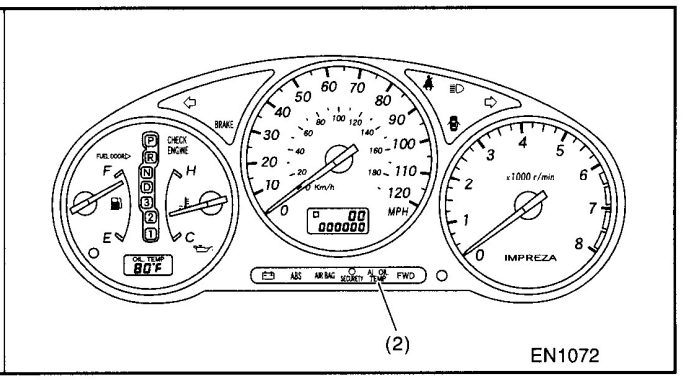

GETtheMANUALS.org

• **Sensor**

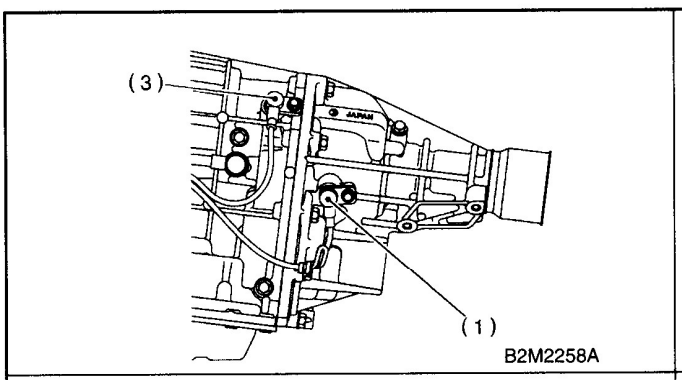

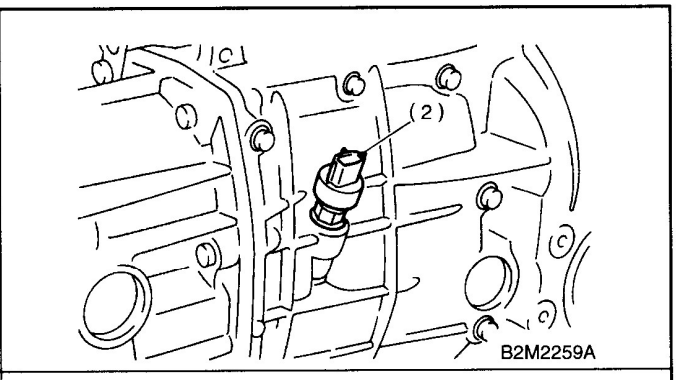

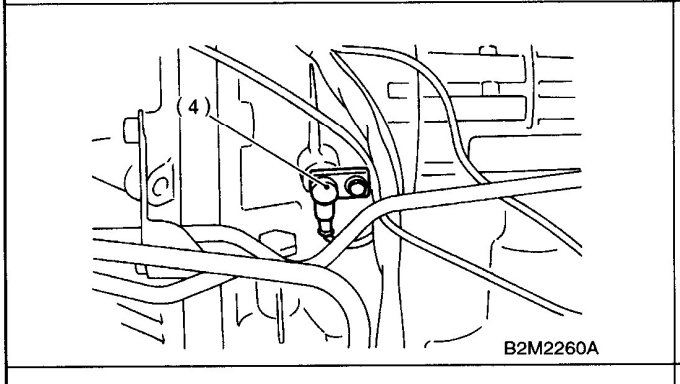

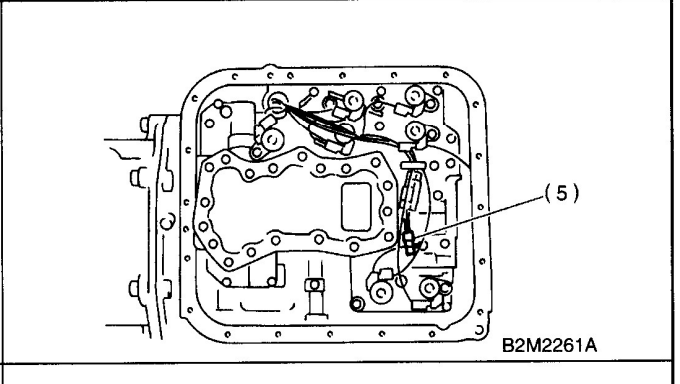

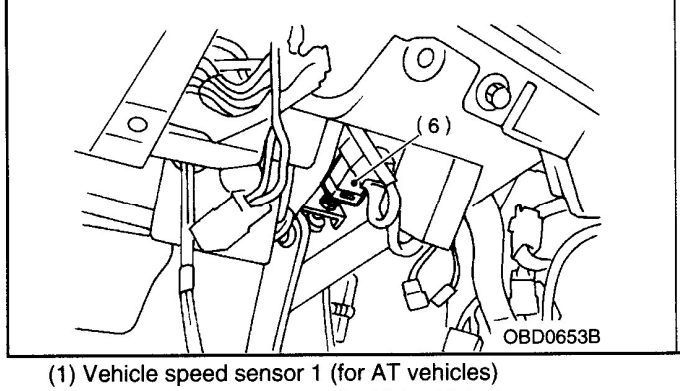

(1) Vehicle speed sensor 1 (for AT vehicles)
(2) Vehicle speed sensor 2 (for MT vehicles)
(3) Vehicle speed sensor 2 (for AT vehicles)
(4) Torque converter turbine speed sensor (for AT vehicles)
(5) ATF temperature sensor (for AT vehicles)
(6) Brake light switch

GETtheMANUALS.org

• Solenoid Valve And Switch (AT Vehicles)

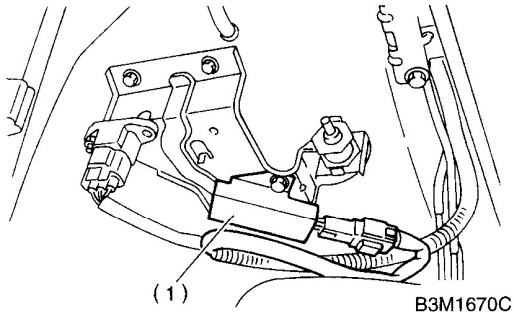

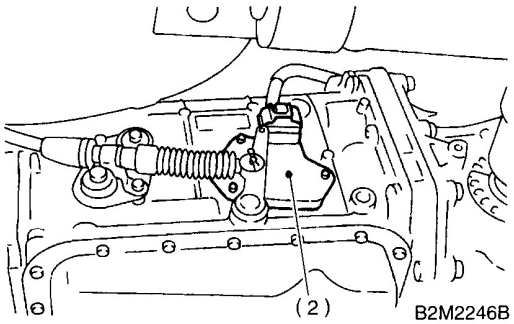

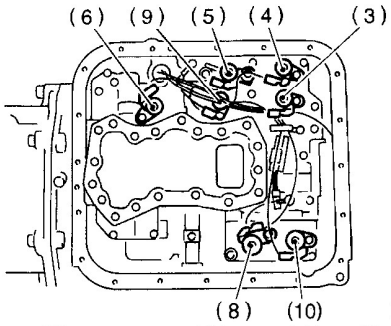

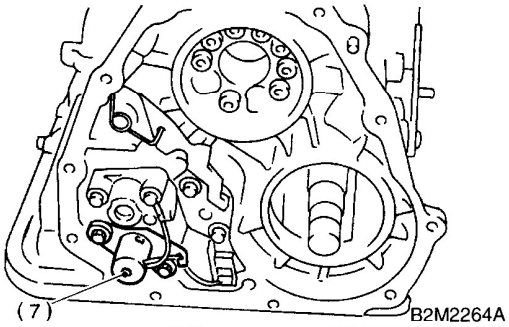

(1) Dropping resistor
(2) Inhibitor switch
(3) Shift solenoid valve 1
(4) Shift solenoid valve 2
(5) Line pressure duty solenoid
(6) Lock-up duty solenoid
(7) Transfer duty solenoid
(8) 2-4 brake duty solenoid
(9) Low clutch timing solenoid valve
(10) 2-4 brake timing solenoid valve

• Solenoid Valve And Switch (MT Vehicles)

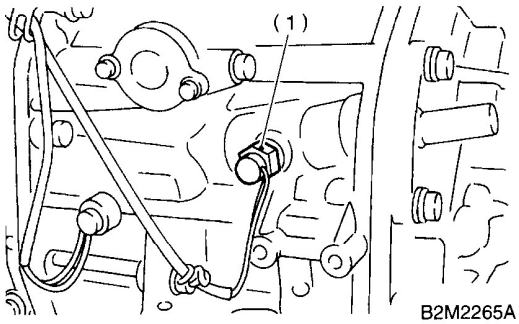

(1) Neutral position switch

GETtheMANUALS.org

GETtheMANUALS.org

5. Engine Control Module (ECM) I/O Signal

A: ELECTRICAL SPECIFICATION

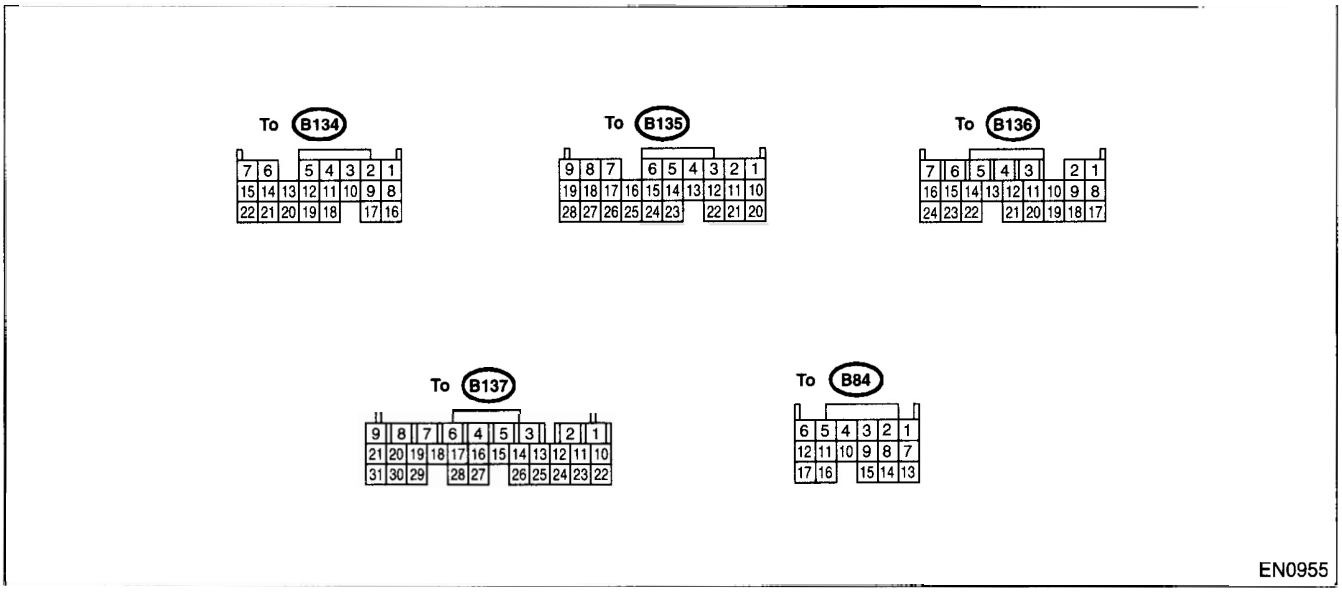

Content		Connector No.	Terminal No.	Signal (V) Ignition SW ON (Engine OFF)	Signal (V) Engine ON (Idling)	Note
Crankshaft position sensor	Signal (+)	B135	2	0	–7 — +7	Sensor output waveform
	Signal (–)	B135	11	0	0	—
	Shield	B135	21	0	0	—
Camshaft position sensor	Signal (+)	B135	1	0	–7 — +7	Sensor output waveform
	Signal (–)	B135	10	0	0	—
	Shield	B135	21	0	0	—
Throttle position sensor	Signal	B135	7			
	Power supply	B135	9	5	5	—
	GND (sensor)	B135	19	0	0	—
Rear oxygen sensor	Signal	B135	17	0	0 — 0.9	—
	Shield	B135	26	0	0	—
	GND (sensor)	B135	19	0	0	—
Front oxygen (A/F) sensor heater	Signal 1	B137	4	0 — 1.0	0 — 1.0	—
	Signal 2	B137	5	0 — 1.0	0 — 1.0	—
Rear oxygen sensor heater signal		B136	13	0 — 1.0	0 — 1.0	—
Engine coolant temperature sensor	Signal	B135	18	1.0 — 1.4	1.0 — 1.4	After warm-up the engine.
	GND (sensor)	B135	19	0	0	After warm-up the engine.
Vehicle speed signal		B134	1	0 or 5	0 or 5	"5" and "0" are repeatedly displayed when vehicle is driven.

GETtheMANUALS.org

ENGINE CONTROL MODULE (ECM) I/O SIGNAL

Content		Connector No.	Terminal No.	Signal (V)		Note
				Ignition SW ON (Engine OFF)	Engine ON (Idling)	
Mass air flow sensor	Signal	B84	13	—	0.3 — 4.5	—
	Shield	B84	8	0	0	—
	GND	B84	7	0	0	—
Intake air temperature sensor signal		B135	27	—	—	—
Exhaust gas temperature sensor	Signal	B135	16	—	—	—
	GND (sensor)	B135	19	0	0	—
Tumble generator valve position sensor RH	Signal	B84	23	Fully closed: 0.2 — 1.0 Fully opened: 4.2 — 4.7		—
	Power supply	B135	9	5	5	—
	GND (sensor)	B135	19	0	0	—
Tumble generator valve position sensor LH	Signal	B84	13	Fully closed: 0.2 — 1.0 Fully opened: 4.2 — 4.7		—
	Power supply	B135	9	5	5	—
	GND (sensor)	B135	19	0	0	—
Tumble generator valve RH (open)		B84	4	0 or 5	0 or 5	—
Tumble generator valve RH (close)		B84	5	0 or 5	0 or 5	—
Tumble generator valve LH (open)		B84	11	0 or 5	0 or 5	—
Tumble generator valve LH (close)		B84	10	0 or 5	0 or 5	—
Wastegate control solenoid valve		B137	24	10 — 13	13 — 14	—
Starter switch		B134	16	0	0	Cranking: 8 — 14
A/C switch		B134	2	ON: 10 — 13 OFF: 0	ON: 13 — 14 OFF: 0	—
Ignition switch		B134	5	10 — 13	13 — 14	—
Neutral position switch		B134	8	ON: 12±0.5 OFF: 0		Switch is ON when gear is in neutral position.
Test mode connector		B134	14	5	5	When connected: 0
Knock sensor	Signal	B135	4	2.8	2.8	—
	Shield	B135	22	0	0	—
Back-up power supply		B137	10	10 — 13	13 — 14	Ignition switch "OFF": 10 — 13
Control unit power supply		B137	2	10 — 13	13 — 14	—
		B137	3	10 — 13	13 — 14	—
Sensor power supply		B135	9	5	5	—
Line end check 1		B134	10	0	0	—
Ignition control	#1	B136	24	0	13 — 14	Waveform
	#2	B136	23	0	13 — 14	Waveform
	#3	B136	22	0	13 — 14	Waveform
	#4	B136	21	0	13 — 14	Waveform

GETtheMANUALS.org

ENGINE CONTROL MODULE (ECM) I/O SIGNAL

Content		Connector No.	Terminal No.	Signal (V)		Note
				Ignition SW ON (Engine OFF)	Engine ON (Idling)	
Fuel injector	#1	B137	1	10 — 13	1 — 14	Waveform
	#2	B136	6	10 — 13	1 — 14	Waveform
	#3	B136	5	10 — 13	1 — 14	Waveform
	#4	B136	4	10 — 13	1 — 14	Waveform
Idle air control solenoid valve	Signal	B136	10	0 or 13 — 14	0 or 13 — 14	Waveform
Fuel pump controller	Signal 1	B134	13	—	—	—
	Signal 2	B136	15	—	—	—
A/C relay control		B137	27	ON: 0.5, or less OFF: 10 — 13	ON: 0.5, or less OFF: 13 — 14	—
Radiator fan relay 1 control		B137	17	ON: 0.5, or less OFF: 10 — 13	ON: 0.5, or less OFF: 13 — 14	—
Radiator fan relay 2 control		B137	28	ON: 0.5, or less OFF: 10 — 13	ON: 0.5, or less OFF: 13 — 14	With A/C vehicles only
Malfunction indicator lamp		B137	15	—	—	Light "ON": 1, or less Light "OFF": 10 — 14
Engine speed output		B136	9	—	0 — 13, or more	Waveform
Purge control solenoid valve		B137	16	ON: 1, or less OFF: 10 — 13	ON: 1, or less OFF: 13 — 14	—
Torque control 1 signal		B134	19	5	5	—
Torque control 2 signal		B134	18	5	5	—
Torque control cut signal		B136	14	8	8	—
Fuel temperature sensor		B135	6	2.5 — 3.8	2.5 — 3.8	Ambient temperature: 25°C (75°F)
Fuel tank pressure sensor	Signal	B135	15	2.3 — 2.7	2.3 — 2.7	The value obtained after the fuel filler cap was removed once and recapped.
	GND (sensor)	B134	19	0	0	—
Fuel tank pressure control solenoid valve		B137	22	ON: 1, or less OFF: 10 — 13	ON: 1, or less OFF: 13 — 14	—
Drain valve		B137	11	ON: 1, or less OFF: 10 — 13	ON: 1, or less OFF: 13 — 14	—
AT diagnosis input signal		B135	20	Less than 1 ←→ More than 4	Less than 1 ←→ More than 4	Waveform
AT load signal		B135	28	4.3 — 4.4	0.9 — 1.4	—
Pressure sensor	Signal	B135	8	1.7 — 2.4	1.1 — 1.6	—
	Power supply	B135	9	5	5	
	GND (sensor)	B135	19	0	0	
Fuel level sensor		B135	25	0.12 — 4.75	0.12 — 4.75	—
Small light switch		B134	17	ON: 0 OFF: 10 — 13	ON: 0 OFF: 13 — 14	—
Blower fan switch		B134	9	ON: 0 OFF: 10 — 13	ON: 0 OFF: 13 — 14	—
Rear defogger switch		B134	3	ON: 0 OFF: 10 — 13	ON: 0 OFF: 13 — 14	—
Power steering oil pressure switch		B135	24	10 — 13	ON: 0 OFF: 13 — 14	—

GETtheMANUALS.org

Content	Connector No.	Terminal No.	Signal (V)		Note
			Ignition SW ON (Engine OFF)	Engine ON (Idling)	
Front oxygen (A/F) sensor signal (+)	B137	19	2.8 — 3.2	2.8 — 3.2	—
Front oxygen (A/F) sensor signal (–)	B137	29	2.4 — 2.7	2.4 — 2.7	—
Front oxygen (A/F) sensor shield	B136	7	0	0	—
SSM/GST communication line	B134	21	Less than 1 ←→ More than 4	Less than 1 ←→ More than 4	—
GND (sensors)	B135	19	0	0	—
GND (injectors)	B136	8	0	0	—
GND (ignition system)	B136	18	0	0	—
GND (power supply)	B136	17	0	0	—
	B134	22	0	0	—
GND (control systems)	B134	7	0	0	—
	B134	15	0	0	—
GND (oxygen sensor heater 1)	B137	9	0	0	—
GND (oxygen sensor heater 2)	B137	8	0	0	—

GETtheMANUALS.org

6. Engine Condition Data

A: ELECTRICAL SPECIFICATION

Content	Specified data
Engine load	1.6 — 2.9 (%): Idling
	6.4 — 12.8 (%): 2,500 rpm racing

Measuring condition:
- After engine is warmed-up.
- Gear position is in neutral position. (MT vehicle)
- Gear position is in "N" or "P" position. (AT vehicle)
- A/C is turned OFF.
- All accessory switches are turned OFF.

GETtheMANUALS.org

GETtheMANUALS.org

7. Transmission Control Module (TCM) I/O Signal

A: ELECTRICAL SPECIFICATION

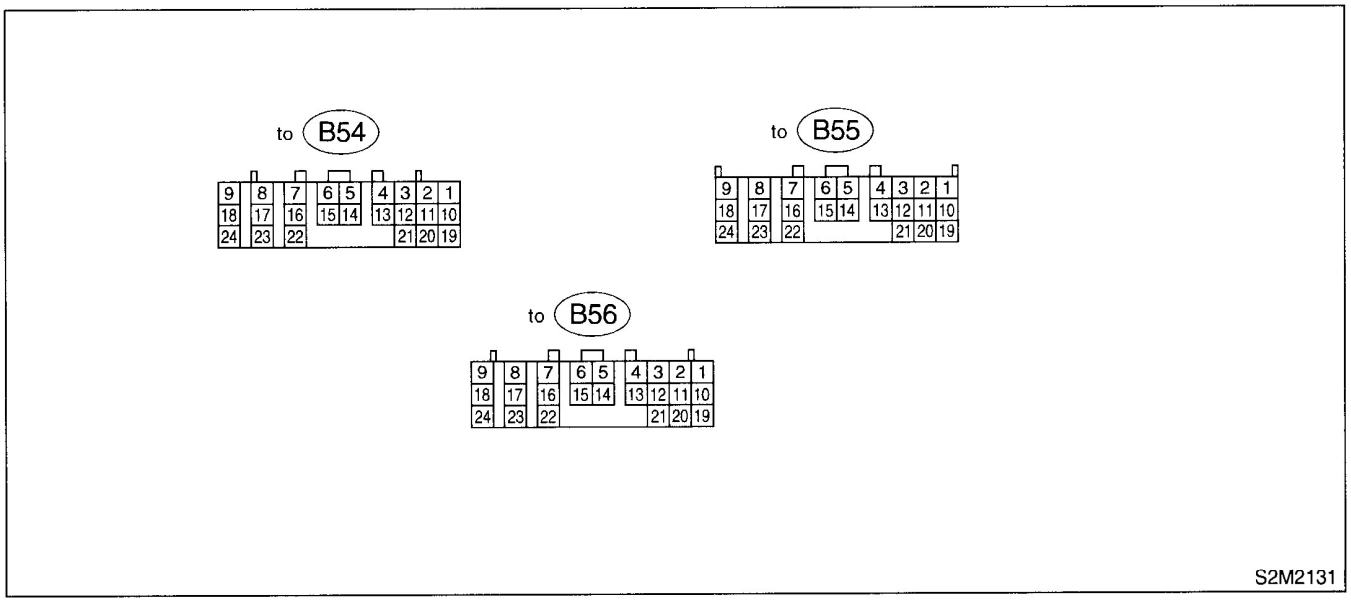

NOTE:
Check with ignition switch ON.

Content		Connector No.	Terminal No.	Measuring conditions	Voltage (V)	Resistance to body (ohms)
Back-up power supply		B56	1	Ignition switch OFF	10 — 13	—
Ignition power supply		B54	23	Ignition switch ON (with engine OFF)	10 — 13	—
		B54	24			
Inhibitor switch	"P" range switch	B55	1	Select lever in "P" range	Less than 1	—
				Select lever in any other than "P" range (except "N" range)	More than 8	
	"N" range switch	B55	14	Select lever in "N" range	Less than 1	—
				Select lever in any other than "N" range (except "P" range)	More than 8	
	"R" range switch	B55	3	Select lever in "R" range	Less than 1	—
				Select lever in any other than "R" range	More than 8	
	"D" range switch	B55	4	Select lever in "D" range	Less than 1	—
				Select lever in any other than "D" range	More than 8	
	"3" range switch	B55	5	Select lever in "3" range	Less than 1	—
				Select lever in any other than "3" range	More than 8	
	"2" range switch	B55	6	Select lever in "2" range	Less than 1	—
				Select lever in any other than "2" range	More than 8	
	"1" range switch	B55	7	Select lever in "1" range	Less than 1	—
				Select lever in any other than "1" range	More than 8	
Brake switch		B55	12	Brake pedal depressed.	More than 10.5	—
				Brake pedal released.	Less than 1	
AT OIL TEMP warning light		B56	11	Light ON	Less than 1	—
				Light OFF	More than 9	

GETtheMANUALS.org

TRANSMISSION CONTROL MODULE (TCM) I/O SIGNAL

Content	Connector No.	Terminal No.	Measuring conditions	Voltage (V)	Resistance to body (ohms)
Throttle position sensor	B54	3	Throttle fully closed.	Approx. 0.5	—
			Throttle fully open.	Approx. 4.3	
Throttle position sensor power supply	B54	2	Ignition switch ON (With engine OFF)	Approx. 5.0	—
ATF temperature sensor	B54	11	ATF temperature 20°C (68°F)	2.9 — 4.0	2.1 — 2.9 k
			ATF temperature 80°C (176°F)	0.5 — 0.8	275 — 375
Rear vehicle speed sensor	B55	24	Vehicle stopped.	0	450 — 650
			Vehicle speed at least 20 km/h (12 MPH)	More than 1 (AC range)	
Front vehicle speed sensor	B55	18	Vehicle stopped.	0	450 — 650
			Vehicle speed at least 20 km/h (12 MPH)	More than 1 (AC range)	
Torque converter turbine speed sensor	B55	8	Engine idling after warm-up. (D range)	0	450 — 650
			Engine idling after warm-up. (N range)	More than 1 (AC range)	
Vehicle speed output signal	B56	17	Vehicle speed at most 10 km/h (6 MPH)	Less than 1← →More than 5	—
Engine speed signal	B55	17	Ignition switch ON (with engine OFF)	0	—
			Ignition switch ON (with engine ON)	8 — 11	
Cruise set signal	B55	22	When cruise control is set (SET lamp ON)	Less than 1	—
			When cruise control is not set (SET lamp OFF)	More than 6.5	
Torque control signal 1	B56	5	Ignition switch ON (with engine ON)	More than 4.8	—
Torque control signal 2	B56	14	Ignition switch ON (with engine ON)	More than 4.8	—
Torque control cut signal	B55	10	Ignition switch ON	8	—
Shift solenoid 1	B54	22	1st or 4th gear	More than 9	10 — 16
			2nd or 3rd gear	Less than 1	
Shift solenoid 2	B54	5	1st or 2nd gear	More than 9	10 — 16
			3rd or 4th gear	Less than 1	
Line pressure duty solenoid	B54	9	Throttle fully closed (with engine OFF) after warm-up.	1.5 — 5.0	2.0 — 4.5
			Throttle fully open (with engine OFF) after warm-up.	Less than 0.5	
Lock-up duty solenoid	B54	7	When lock up occurs.	More than 8.5	10 — 17
			When lock up is released.	Less than 0.5	
Transfer duty solenoid	B54	6	Fuse on FWD switch	More than 8.5	10 — 17
			Fuse removed from FWD switch (with throttle fully open and with select lever in 1st gear).	Less than 0.5	
2-4 brake duty solenoid	B54	18	Throttle fully closed (with engine OFF) after warm-up.	1.5 — 5.0	2.0 — 4.5
			Throttle fully open (with engine OFF) after warm-up.	Less than 0.5	

GETtheMANUALS.org

TRANSMISSION CONTROL MODULE (TCM) I/O SIGNAL

Content	Connector No.	Terminal No.	Measuring conditions	Voltage (V)	Resistance to body (ohms)
2-4 brake dropping resistor	B54	17	Throttle fully closed (with engine OFF) after warm-up.	More than 8.5	9 — 15
			Throttle fully open (with engine OFF) after warm-up.	Less than 0.5	
2-4 brake timing solenoid	B54	16	1st gear	Less than 1	10 — 16
			3rd gear	More than 9	
Low clutch timing solenoid	B54	15	2nd gear	Less than 1	10 — 16
			4th gear	More than 9	
Sensor ground line 1	B54	19	—	0	Less than 1
Sensor ground line 2	B55	9	—	0	Less than 1
System ground line	B56	19	—	0	Less than 1
	B54	20			
AT diagnosis signal	B56	21	Ignition switch ON	Less than 1 ← → More than 4	—
Data link signal (Subaru Select Monitor)	B56	15	—	—	—
		6	—	—	

GETtheMANUALS.org

8. Data Link Connector

A: NOTE

1) This connector is used both for OBD-II general scan tools and the Subaru Select Monitor.
2) Terminal No. 4 to No. 6 of the data link connector is used for the Subaru Select Monitor signal.

CAUTION:
Do not connect any scan tools other than the OBD-II general scan tools and the Subaru Select Monitor, because the circuit for the Subaru Select Monitor may be damaged.

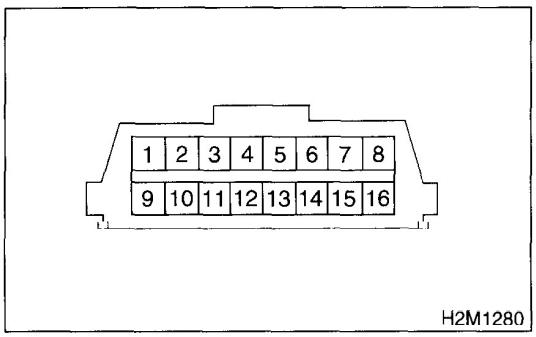

Terminal No.	Contents	Terminal No.	Contents
1	Power supply	9	Blank
2	Blank	10	K line of ISO 9141 CARB
3	Blank	11	Blank
4	Blank	12	Ground
5	Blank	13	Ground
6	Line end check signal 1	14	Blank
7	Blank	15	Blank
8	Line end check signal 2	16	Blank

GETtheMANUALS.org

9. OBD-II General Scan Tool

A: OPERATION

1. HOW TO USE OBD-II GENERAL SCAN TOOL

1) Prepare a general scan tool (OBD-II general scan tool) required by SAE J1978.
2) Open the cover and connect the OBD-II general scan tool to the data link connector located in the lower portion of the instrument panel (on the driver's side).

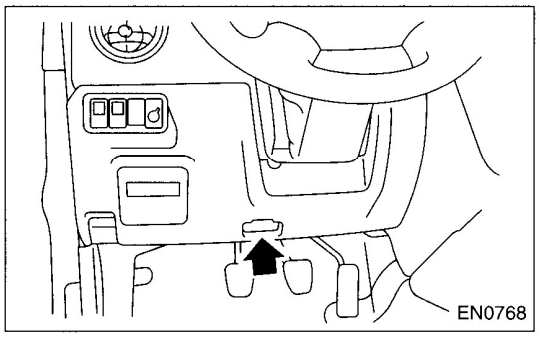

3) Using the OBD-II general scan tool, call up diagnostic trouble code(s) and freeze frame data.
OBD-II general scan tool functions consist of:
(1) MODE $01: Current powertrain diagnostic data
(2) MODE $02: Powertrain freeze frame data
(3) MODE $03: Emission-related powertrain diagnostic trouble codes
(4) MODE $04: Clear/Reset emission-related diagnostic information

Read out data according to repair procedures. (For detailed operation procedures, refer to the OBD-II General Scan Tool Operation Manual.)

NOTE:
For details concerning diagnostic trouble codes, refer to the List of Diagnostic Trouble Code (DTC). <Ref. to EN(DOHC TURBO)-80, List of Diagnostic Trouble Code (DTC).>

2. MODE $01 (CURRENT POWERTRAIN DIAGNOSTIC DATA)

Refers to data denoting the current operating condition of analog input/output, digital input/output and/or the powertrain system.
A list of the support data and PID (Parameter Identification) codes are shown in the following table.

PID	Data	Unit of measure
01	Number of emission-related powertrain trouble codes and MIL status	ON/OFF
03	Fuel system control status	—
04	Calculated engine load value	%
05	Engine coolant temperature	°C
06	Short term fuel trim	%
07	Long term fuel trim	%
0B	Intake manifold absolute pressure	kPa
0C	Engine revolution	rpm
0D	Vehicle speed	km/h
0E	Ignition timing advance	°
0F	Intake air temperature	°C
10	Air flow rate from pressure sensor	g/sec
11	Throttle valve opening angle	%
13	Check whether oxygen sensor is installed.	—
15	Oxygen sensor output voltage and short term fuel trim associated with oxygen sensor—bank 2	V and %
24	A/F sensor 1 output voltage and short term fuel trim associated with A/F sensor 1	V and %
1C	On-board diagnosis system	—

NOTE:
Refer to OBD-II general scan tool manufacturer's instruction manual to access generic OBD-II PIDs (MODE $01).

GETtheMANUALS.org

3. MODE $02 (POWERTRAIN FREEZE FRAME DATA)

Refers to data denoting the operating condition when trouble is sensed by the on-board diagnosis system. A list of the support data and PID (Parameter Identification) codes are shown in the following table.

PID	Data	Unit of measure
02	Trouble code that caused CARB required freeze frame data storage	—
03	Fuel system control status	—
04	Calculated engine load value	%
05	Engine coolant temperature	°C
06	Short term fuel trim	%
07	Long term fuel trim	%
0B	Intake manifold absolute pressure	kPa
0C	Engine revolution	rpm
0D	Vehicle speed	km/h

NOTE:
Refer to OBD-II general scan tool manufacturer's instruction manual to access freeze frame data (MODE $02).

4. MODE $03 (EMISSION-RELATED POWERTRAIN DIAGNOSTIC TROUBLE CODE)

Refer to Read Diagnostic Trouble Code for information about data denoting emission-related powertrain diagnostic trouble codes. <Ref. to EN(DOHC TURBO)-45, Read Diagnostic Trouble Code.>

5. MODE $04 (CLEAR/RESET EMISSION-RELATED DIAGNOSTIC INFORMATION)

Refers to the mode used to clear or reset emission-related diagnostic information (OBD-II trouble diagnostic information).

NOTE:
Refer to OBD-II general scan tool manufacturer's instruction manual to clear or reset emission-related diagnostic information (MODE $04).

GETtheMANUALS.org

10.Subaru Select Monitor

A: OPERATION

1. HOW TO USE SUBARU SELECT MONITOR

1) Prepare the Subaru Select Monitor kit. <Ref. to EN(DOHC TURBO)-8, PREPARATION TOOL, General Description.>

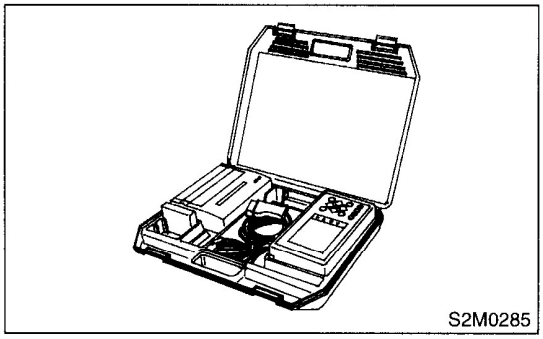
S2M0285

2) Connect the diagnosis cable to Subaru Select Monitor.
3) Insert the cartridge into Subaru Select Monitor. <Ref. to EN(DOHC TURBO)-8, PREPARATION TOOL, General Description.>

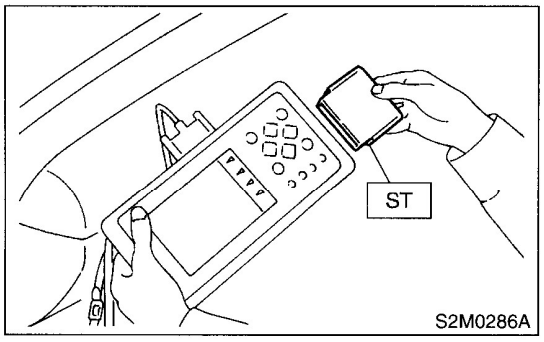

S2M0286A

4) Connect the Subaru Select Monitor to data link connector.
(1) Data link connector located in the lower portion of the instrument panel (on the driver's side).

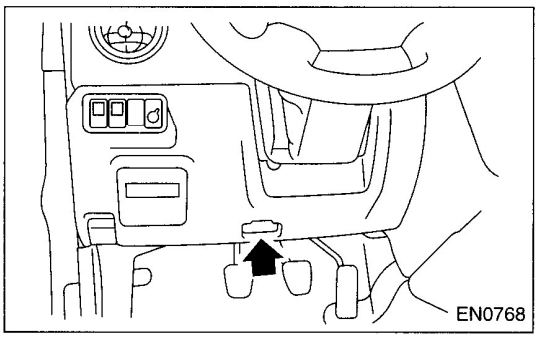
EN0768

(2) Connect the diagnosis cable to data link connector.

CAUTION:
Do not connect scan tools except for Subaru Select Monitor and OBD-II general scan tool.

5) Turn the ignition switch to ON (engine OFF) and Subaru Select Monitor switch to ON.

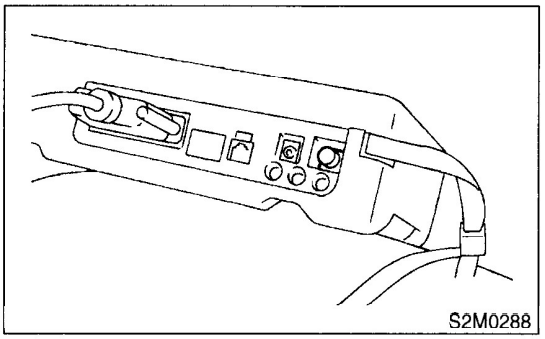
S2M0288

6) Using the Subaru Select Monitor, call up diagnostic trouble code(s) and various data, then record them.

2. READ DIAGNOSTIC TROUBLE CODE (DTC) FOR ENGINE. (NORMAL MODE)

Refer to Read Diagnostic Trouble Code for information about how to indicate DTC. <Ref. to EN(DOHC TURBO)-45, Read Diagnostic Trouble Code.>

3. READ DIAGNOSTIC TROUBLE CODE (DTC) FOR ENGINE. (OBD MODE)

Refer to Read Diagnostic Trouble Code for information about how to indicate DTC. <Ref. to EN(DOHC TURBO)-45, Read Diagnostic Trouble Code.>

GETtheMANUALS.org

4. READ CURRENT DATA FOR ENGINE. (NORMAL MODE)

1) On the «Main Menu» display screen, select the {Each System Check} and press the [YES] key.
2) On the «System Selection Menu» display screen, select the {Engine Control System} and press the [YES] key.
3) Press the [YES] key after displayed the information of engine type.
4) On the «Engine Diagnosis» display screen, select the {Current Data Display & Save} and press the [YES] key.
5) On the «Data Display Menu» display screen, select the {Data Display} and press the [YES] key.
6) Using the scroll key, move the display screen up or down until the desired data is shown.

- A list of the support data is shown in the following table.

Contents	Display	Unit of measure
Battery voltage	Battery Voltage	V
Vehicle speed signal	Vehicle Speed	km/h or MPH
Engine speed signal	Engine Speed	rpm
Engine coolant temperature signal	Coolant Temp.	°C or °F
Ignition timing signal	Ignition Timing	deg
Throttle position signal	Throttle Opening Angle	%
Throttle position signal	Throttle Sensor Voltage	V
Injection pulse width	Fuel Injection #1 Pulse	ms
Idle air control signal	ISC Valve Duty Ratio	%
Fuel pump duty control signal	Fuel Pump Duty	%
A/F sensor current	A/F Sensor #1 Current	mA
A/F sensor resistance	A/F Sensor #1 Resistance	Ω
Front oxygen (A/F) sensor output signal	A/F Sensor #1	—
Rear oxygen sensor output signal	Rear O2 Sensor	V
Short term fuel trim	A/F Correction #1	%
Knock sensor signal	Knocking Correction	deg
Atmospheric absolute pressure signal	Atmosphere Pressure	mmHg or kPa or inHg or psi
Intake manifold relative pressure signal	Mani. Relative Pressure	mmHg or kPa or inHg or psi
Intake manifold absolute pressure signal	Mani. Absolute Pressure	mmHg or kPa or inHg or psi
A/F correction (short term fuel trim) by rear oxygen sensor	A/F Correction #3	%
Long term whole fuel trim	A/F Learning #1	%
Front oxygen (A/F) sensor heater current	A/F Heater Current 1	A
Rear oxygen sensor heater voltage	Rear O2 Heater Voltage	V
Canister purge control solenoid valve duty ratio	CPC Valve Duty Ratio	%
Primary supercharged pressure control signal	Primary Control	%
Tumble generator valve position sensor signal (right side)	TGV Position Sensor R	V
Tumble generator valve position sensor signal (left side)	TGV Position Sensor L	V
Tumble generator valve drive signal	TGV Drive	OPEN or CLOSE
Fuel level signal	Fuel Level	V
Intake air temperature signal	Intake Air Temp.	°C or °F
Learned ignition timing	Learned Ignition Timing	deg
Mass air flow sensor signal	Mass Air Flow	g/s
Mass air flow sensor signal	Air Flow Sensor Voltage	V
Fuel tank pressure signal	Fuel Tank Pressure	mmHg or kPa or inHg or psi
Fuel temperature signal	Fuel Temp	°C or °F
Exhaust gas temperature signal	Exhaust Gas Temperature	°C or °F
MT/AT identification signal	AT Vehicle ID Signal	ON or OFF
Fuel pressure control solenoid valve signal	PCV Solenoid Valve	ON or OFF

GETtheMANUALS.org

SUBARU SELECT MONITOR

Contents	Display	Unit of measure
Drain valve signal	Vent. Solenoid Valve	ON or OFF
Ignition switch signal	Ignition Switch	ON or OFF
Test mode connector signal	Test Mode Signal	ON or OFF
Neutral position switch signal	Neutral Position Switch	ON or OFF
Air conditioning switch signal	A/C Switch	ON or OFF
Air conditioning signal	A/C Compressor Signal	ON or OFF
Radiator main fan relay signal	Radiator Fan Relay #1	ON or OFF
Fuel pump relay signal	Fuel Pump Relay	ON or OFF
Knocking signal	Knocking Signal	ON or OFF
Radiator sub fan relay signal	Radiator Fan Relay #2	ON or OFF
Power steering switch signal	P/S Switch	ON or OFF
Engine torque control signal #1	Torque Control Signal #1	ON or OFF
Engine torque control signal #2	Torque Control Signal #2	ON or OFF
Engine torque control permission signal	Torque Permission Signal	ON or OFF
Rear oxygen sensor rich signal	Rear O2 Rich Signal	ON or OFF
Starter switch signal	Starter Switch	ON or OFF
Idle switch signal	Idle Switch	ON or OFF
Crankshaft position sensor signal	Crankshaft Position Sig.	ON or OFF
Camshaft position sensor signal	Camshaft Position Sig.	ON or OFF
Rear defogger switch signal	Rear Defogger SW	ON or OFF
Blower fan switch signal	Blower Fan SW	ON or OFF
Small light switch signal	Light Switch	ON or OFF
Tumble generator valve output signal	TGV Output	ON or OFF

NOTE:
For detailed operation procedure, refer to the SUBARU SELECT MONITOR OPERATION MANUAL.

GETtheMANUALS.org

5. READ CURRENT DATA FOR ENGINE. (OBD MODE)

1) On the «Main Menu» display screen, select the {Each System Check} and press the [YES] key.
2) On the «System Selection Menu» display screen, select the {Engine Control System} and press the [YES] key.
3) Press the [YES] key after displayed the information of engine type.
4) On the «Engine Diagnosis» display screen, select the {OBD System} and press the [YES] key.
5) On the «OBD Menu» display screen, select the {Current Data Display & Save} and press the [YES] key.
6) On the «Data Display Menu» display screen, select the {Data Display} and press the [YES] key.
7) Using the scroll key, move the display screen up or down until the desired data is shown.

• A list of the support data is shown in the following table.

Contents	Display	Unit of measure
Number of diagnosis code	Number of Diagnosis Code	—
Malfunction indicator lamp status	MI (MIL)	ON or OFF
Monitoring test of misfire	Misfire monitoring	Complete or incomplete
Monitoring test of fuel system	Fuel system monitoring	Complete or incomplete
Monitoring test of comprehensive component	Component monitoring	Complete or incomplete
Test of catalyst	Catalyst Diagnosis	Complete or incomplete
Test of heated catalyst	Heated catalyst	No support
Test of evaporative emission purge control system	Evaporative purge system	Complete or incomplete
Test of secondary air system	Secondary air system	No support
Test of air conditioning system refrigerant	A/C system refrigerant	No support
Test of oxygen sensor	Oxygen sensor	Complete or incomplete
Test of oxygen sensor heater	O2 Heater Diagnosis	Complete or incomplete
Test of EGR system	EGR system	No support
Air fuel ratio control system for bank 1	Fuel System for Bank 1	—
Engine load data	Calculated load value	%
Engine coolant temperature signal	Coolant Temp.	°C or °F
Short term fuel trim by front oxygen (A/F) sensor	Short term fuel trim B1	%
Long term fuel trim by front oxygen (A/F) sensor	Long term fuel trim B1	%
Intake manifold absolute pressure signal	Mani. Absolute Pressure	mmHg or kPa or inHg or psi
Engine speed signal	Engine Speed	rpm
Vehicle speed signal	Vehicle Speed	km/h or MPH
Ignition timing advance for #1 cylinder	Ignition timing adv. #1	°
Intake air temperature signal	Intake Air Temp.	°C or °F
Intake air amount	Mass Air Flow	g/s
Throttle position signal	Throttle Opening Angle	%
A/F sensor signal	A/F sensor #11	V
Rear oxygen sensor output signal	Oxygen Sensor #12	V
Air fuel ratio correction by rear oxygen sensor	Short term fuel trim #12	%
On-board diagnostic system	OBD System	—

NOTE:
For detailed operation procedure, refer to the SUBARU SELECT MONITOR OPERATION MANUAL.

GETtheMANUALS.org

6. READ FREEZE FRAME DATA FOR ENGINE. (OBD MODE)

1) On the «Main Menu» display screen, select the {Each System Check} and press the [YES] key.
2) On the «System Selection Menu» display screen, select the {Engine Control System} and press the [YES] key.
3) Press the [YES] key after displayed the information of engine type.
4) On the «Engine Diagnosis» display screen, select the {OBD System} and press the [YES] key.
5) On the «OBD Menu» display screen, select the {Freeze Frame Data} and press the [YES] key.

- A list of the support data is shown in the following table.

Contents	Display	Unit of measure
Diagnostic trouble code (DTC) for freeze frame data	Freeze frame data	DTC
Air fuel ratio control system for bank 1	Fuel system for Bank1	ON or OFF
Engine load data	Calculated load valve	%
Engine coolant temperature signal	Coolant Temp.	°C or °F
Short term fuel trim by front oxygen (A/F) sensor	Short term fuel trim B1	%
Long term fuel trim by front oxygen (A/F) sensor	Long term fuel trim B1	%
Intake manifold absolute pressure signal	Mani. Absolute Pressure	mmHg or kPa or inHg or psi
Engine speed signal	Engine Speed	rpm
Vehicle speed signal	Vehicle Speed	km/h or MPH

NOTE:
For detailed operation procedure, refer to the SUBARU SELECT MONITOR OPERATION MANUAL.

GETtheMANUALS.org

7. LED OPERATION MODE FOR ENGINE

1) On the «Main Menu» display screen, select the {Each System Check} and press the [YES] key.
2) On the «System Selection Menu» display screen, select the {Engine Control System} and press the [YES] key.
3) Press the [YES] key after displayed the information of engine type.
4) On the «Engine Diagnosis» display screen, select the {Current Data Display & Save} and press the [YES] key.
5) On the «Data Display Menu» display screen, select the {Data & LED Display} and press the [YES] key.
6) Using the scroll key, move the display screen up or down until the desired data is shown.

- A list of the support data is shown in the following table.

Contents	Display	Message	LED "ON" requirements
Ignition switch signal	Ignition Switch	ON or OFF	When ignition switch is turned ON.
Test mode connector signal	Test Mode Signal	ON or OFF	When test mode connector is connected.
Neutral position switch signal	Neutral Position Switch	ON or OFF	When neutral position signal is entered.
Air conditioning switch signal	A/C Switch	ON or OFF	When air conditioning switch is turned ON.
Air conditioning relay signal	A/C Compressor Signal	ON or OFF	When air conditioning compressor is in function.
Radiator main fan relay signal	Radiator Fan Relay #1	ON or OFF	When radiator main fan relay is in function.
Knocking signal	Knocking Signal	ON or OFF	When knocking signal is entered.
Radiator sub fan relay signal	Radiator Fan Relay #2	ON or OFF	When radiator sub fan relay is in function.
Engine torque control signal #1	Torque Control Signal #1	ON or OFF	When engine torque control signal 1 is entered.
Engine torque control signal #2	Torque Control Signal #2	ON or OFF	When engine torque control signal 2 is entered.
Engine torque control permission signal	Torque Control Permission	ON or OFF	When engine torque control permission signal is entered.
Rear oxygen sensor rich signal	Rear O2 Rich Signal	ON or OFF	When rear oxygen sensor mixture ratio is rich.
Starter switch signal	Starter Switch	ON or OFF	When starter switch signal is entered.
Idle switch signal	Idle Switch Signal	ON or OFF	When idle switch signal is entered.
Crankshaft position sensor signal	Crankshaft Position Signal	ON or OFF	When crankshaft position sensor signal is entered.
Camshaft position sensor signal	Camshaft Position Signal	ON or OFF	When camshaft position sensor signal is entered.
Power steering switch signal	P/S Switch	ON or OFF	When power steering switch is entered.
Rear defogger switch signal	Rear Defogger Switch	ON or OFF	When rear defogger switch is turned ON.
Blower fan switch signal	Blower Fan Switch	ON or OFF	When blower fan switch is turned ON.
Light switch signal	Light Switch	ON or OFF	When small light switch is turned ON.
Tumble generator valve actuator signal	TGV Output	ON or OFF	When TGV actuator signal is entered.
Tumble generator valve drive signal	TGV Drive	OPEN or CLOSE	When TGV moves and valve opens.
Fuel pressure control solenoid valve signal	PCV Solenoid Valve	ON or OFF	When fuel pressure control solenoid valve is in function.
Drain valve signal	Vent. Solenoid Valve	ON or OFF	When drain valve is in function.

NOTE:
For detailed operation procedure, refer to the SUBARU SELECT MONITOR OPERATION MANUAL.

GETtheMANUALS.org

8. READ CURRENT DATA FOR AT

1) On the «Main Menu» display screen, select the {Each System Check} and press the [YES] key.
2) On the «System Selection Menu» display screen, select the {Transmission Control System} and press the [YES] key.
3) Press the [YES] key after displayed the information of transmission type.
4) On the «Transmission Diagnosis» display screen, select the {Current Data Display & Save} and press the [YES] key.
5) On the «Data Display Menu» display screen, select the {Data Display} and press the [YES] key.
6) Using the scroll key, move the display screen up or down until the desired data is shown.

- A list of the support data is shown in the following table.

Contents	Display	Unit of measure
Battery voltage	Battery Voltage	V
Rear vehicle speed sensor signal	Rear Wheel Speed	km/h or MPH
Front vehicle speed sensor signal	Front Wheel Speed	km/h or MPH
Engine speed signal	Engine Speed	rpm
Automatic transmission fluid temperature signal	ATF Temp.	°C or °F
Mass air flow sensor signal	Air Flow Sensor Voltage	V
Throttle position signal	Throttle Sensor Voltage	V
Gear position	Gear Position	—
Line pressure control duty ratio	Line Pressure Duty Ratio	%
Lock up clutch control duty ratio	Lock Up Duty Ratio	%
Transfer clutch control duty ratio	Transfer Duty Ratio	%
Power supply for throttle position sensor	Throttle Sensor Power	V
Torque converter turbine speed signal	Turbine Revolution Speed	rpm
2-4 brake timing pressure control duty ratio	Brake Clutch Duty Ratio	%
Stop lamp switch signal	Stop Light Switch	ON or OFF
Anti lock brake system signal	ABS Signal	ON or OFF
Cruise control system signal	Cruise Control Signal	ON or OFF
Neutral/Parking range signal	N/P Range Signal	ON or OFF
Reverse range signal	R Range Signal	ON or OFF
Drive range signal	D Range Signal	ON or OFF
3rd range signal	3rd Range Signal	ON or OFF
2nd range signal	2nd Range Signal	ON or OFF
1st range signal	1st Range Signal	ON or OFF
Shift control solenoid A	Shift Solenoid #1	ON or OFF
Shift control solenoid B	Shift Solenoid #2	ON or OFF
Torque control output signal #1	Torque Control Signal #1	ON or OFF
Torque control output signal #2	Torque Control Signal #2	ON or OFF
Torque control cut signal	Torque Control Cut Sig.	ON or OFF
2-4 brake timing control solenoid valve	2-4 Brake Timing Sol.	ON or OFF
Low clutch timing control solenoid valve	Low Clutch Timing Sol.	ON or OFF
Automatic transmission diagnosis indicator lamp	Diagnosis Lamp	ON or OFF

NOTE:
For detailed operation procedure, refer to the SUBARU SELECT MONITOR OPERATION MANUAL.

GETtheMANUALS.org

11. Read Diagnostic Trouble Code

A: OPERATION

1. SUBARU SELECT MONITOR (NORMAL MODE)

1) On the «Main Menu» display screen, select the {Each System Check} and press the [YES] key.
2) On the «System Selection Menu» display screen, select the {Engine Control System} and press the [YES] key.
3) Press the [YES] key after displayed the information of engine type.
4) On the «Engine Diagnosis» display screen, select the {Diagnostic Code(s) Display} and press the [YES] key.
5) On the «Diagnostic Code(s) Display» display screen, select the {Current Diagnostic Code(s)} or {History Diagnostic Code(s)} and press the [YES] key.

NOTE:
• For detailed operation procedure, refer to the SUBARU SELECT MONITOR OPERATION MANUAL.
• For detailed concerning diagnostic trouble codes, refer to the List of Diagnostic Trouble Code (DTC). <Ref. to EN(DOHC TURBO)-80, List of Diagnostic Trouble Code (DTC).>

2. SUBARU SELECT MONITOR (OBD MODE)

1) On the «Main Menu» display screen, select the {2. Each System Check} and press the [YES] key.
2) On the «System Selection Menu» display screen, select the {Engine Control System} and press the [YES] key.
3) Press the [YES] key after displayed the information of engine type.
4) On the «Engine Diagnosis» display screen, select the {OBD System} and press the [YES] key.
5) On the «OBD Menu» display screen, select the {Diagnosis Code(s) Display} and press the [YES] key.
6) Make sure that a diagnostic trouble code (DTC) is shown on the display screen.

NOTE:
• For detailed operation procedure, refer to the SUBARU SELECT MONITOR OPERATION MANUAL.
• For detailed concerning diagnostic trouble codes, refer to the List of Diagnostic Trouble Code (DTC). <Ref. to EN(DOHC TURBO)-80, List of Diagnostic Trouble Code (DTC).>

3. OBD-II GENERAL SCAN TOOL

Refers to data denoting emission-related powertrain diagnostic trouble codes.
For details concerning diagnostic trouble codes, refer to the List of Diagnostic Trouble Code (DTC). <Ref. to EN(DOHC TURBO)-80, List of Diagnostic Trouble Code (DTC).>

NOTE:
Refer to OBD-II general scan tool manufacturer's instruction manual to access emission-related powertrain diagnostic trouble codes (MODE $03).

GETtheMANUALS.org

12.Inspection Mode

A: OPERATION

1. PREPARATION FOR THE INSPECTION MODE

Raise the vehicle using a garage jack and place on safety stands or drive the vehicle onto free rollers.

WARNING:
• Before raising the vehicle, ensure parking brakes are applied.
• Do not use a pantograph jack in place of a safety stand.
• Secure a rope or wire to the front and rear towing or tie-down hooks to prevent the lateral runout of front wheels.
• Do not abruptly depress/release the clutch pedal or accelerator pedal during works even when engine is operating at low speeds since this may cause the vehicle to jump off free rollers.
• In order to prevent the vehicle from slipping due to vibration, do not place any wooden blocks or similar items between the safety stands and the vehicle.
• Since the rear wheels will also rotate, do not place anything near them. Also, make sure that nobody goes in front of the vehicle.

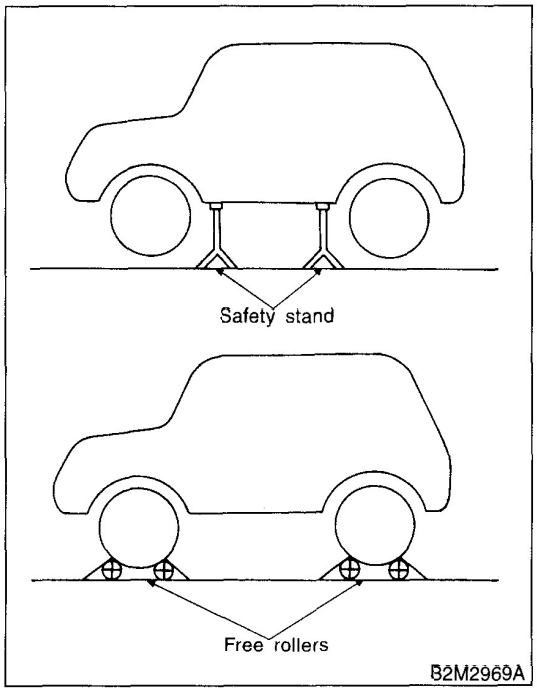

2. SUBARU SELECT MONITOR

After performing diagnostics and clearing the memory, check for any remaining unresolved trouble data.
1) Prepare the Subaru Select Monitor kit. <Ref. to EN(DOHC TURBO)-8, PREPARATION TOOL, General Description.>

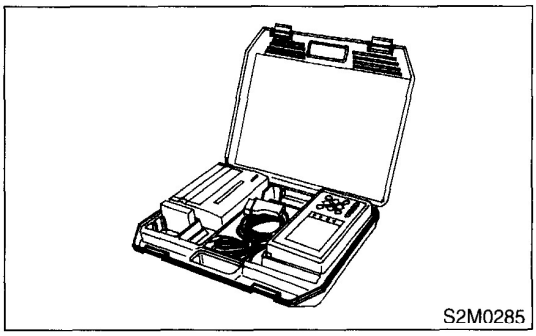

2) Connect the diagnosis cable to Subaru Select Monitor.
3) Insert the cartridge into Subaru Select Monitor. <Ref. to EN(DOHC TURBO)-8, PREPARATION TOOL, General Description.>

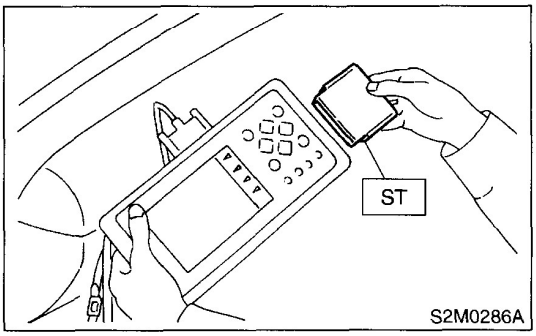

4) Connect the test mode connector at the lower portion of instrument panel (on the driver's side), to the side of the center console box.

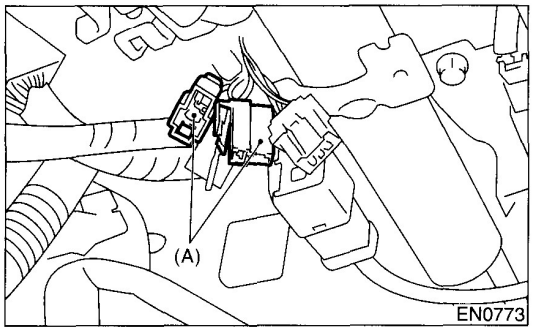

GETtheMANUALS.org

5) Connect the Subaru Select Monitor to data link connector.
(1) Connect the Subaru Select Monitor to data link connector located in the lower portion of the instrument panel (on the driver's side).

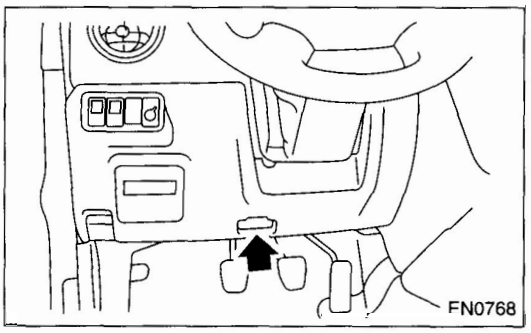

(2) Connect the diagnosis cable to data link connector.

CAUTION:
Do not connect scan tools except for Subaru Select Monitor and OBD-II general scan tool.

6) Turn the ignition switch to ON (engine OFF) and Subaru Select Monitor switch to ON.

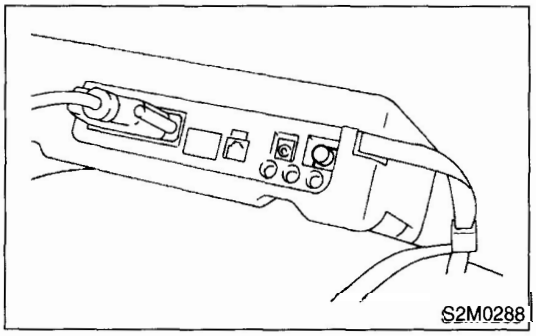

7) On the «Main Menu» display screen, select the {2. Each System Check} and press the [YES] key.
8) On the «System Selection Menu» display screen, select the {Engine Control System} and press the [YES] key.
9) Press the [YES] key after displayed the information of engine type.
10) On the «Engine Diagnosis» display screen, select the {Dealer Check Mode Procedure} and press the [YES] key.
11) When the "Perform Inspection (Dealer Check) Mode?" is shown on the display screen, press the [YES] key.
12) Perform subsequent procedures as instructed on the display screen.
• If trouble still remains in the memory, the corresponding diagnostic trouble code (DTC) appears on the display screen.

NOTE:
• For detailed operation procedure, refer to the SUBARU SELECT MONITOR OPERATION MANUAL.
• For detailed concerning diagnostic trouble codes, refer to the List of Diagnostic Trouble Code (DTC). <Ref. to EN(DOHC TURBO)-80, List of Diagnostic Trouble Code (DTC).>
• Release the parking brake.
• The speed difference between front and rear wheels may light either the ABS warning light, but this indicates no malfunctions. When engine control diagnosis is finished, perform the ABS memory clearance procedure of self-diagnosis system.

3. OBD-II GENERAL SCAN TOOL

After performing the diagnostics and clearing the memory, check for any remaining unresolved trouble data:
1) Connect the test mode connector (A) at the lower side of the instrument panel (on the driver's side), to the side of the center console box.

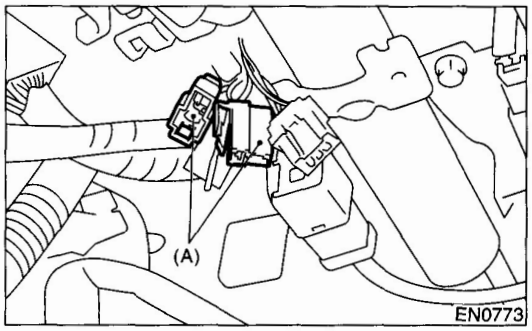

GETtheMANUALS.org

2) Connect the OBD-II general scan tool to its data link connector in the lower portion of the instrument panel (on the driver's side).

CAUTION:
Do not connect scan tools except for Subaru Select Monitor and OBD-II general scan tool.

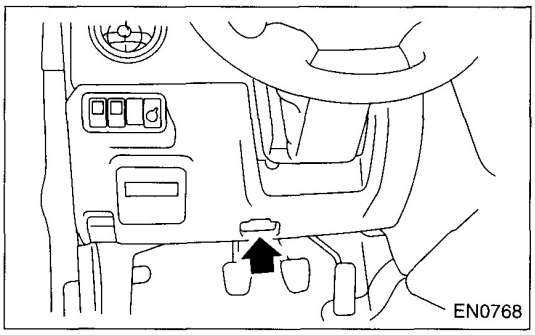

3) Start the engine.

NOTE:
Depress the clutch pedal when starting the engine.

4) Using the shift lever, turn the "N" position switch to ON.
5) Keep the engine speed in the 2,500 — 3,000 rpm range for 40 seconds.
6) Place the shift lever in the "1st" gear and drive the vehicle at 5 to 10 km/h (3 to 6 MPH).

NOTE:
The speed difference between front and rear wheels may light the ABS warning light, but this indicates no malfunctions. When engine control diagnosis is finished, perform the ABS memory clearance procedure of self-diagnosis system.

7) Using the OBD-II general scan tool, check for diagnostic trouble code(s) and record the result(s).

NOTE:
• For detailed operation procedures, refer to the OBD-II General Scan Tool Instruction Manual.
• For detailed concerning diagnostic trouble codes, refer to the List of Diagnostic Trouble Code (DTC). <Ref. to EN(DOHC TURBO)-80, List of Diagnostic Trouble Code (DTC).>

GETtheMANUALS.org

13.Clear Memory Mode

A: OPERATION

1. SUBARU SELECT MONITOR (NORMAL MODE)

1) On the «Main Menu» display screen, select the {2. Each System Check} and press the [YES] key.
2) On the «System Selection Menu» display screen, select the {Engine Control System} and press the [YES] key.
3) Press the [YES] key after displayed the information of engine type.
4) On the «Engine Diagnosis» display screen, select the {Clear Memory} and press the [YES] key.
5) When the `Done' and `Turn Ignition Switch OFF' are shown on the display screen, turn the Subaru Select Monitor and ignition switch to OFF.

NOTE:
• For detailed operation procedure, refer to the SUBARU SELECT MONITOR OPERATION MANUAL.

2. SUBARU SELECT MONITOR (OBD MODE)

1) On the «Main Menu» display screen, select the {2. Each System Check} and press the [YES] key.
2) On the «System Selection Menu» display screen, select the {Engine Control System} and press the [YES] key.
3) Press the [YES] key after displayed the information of engine type.
4) On the «Engine Diagnosis» display screen, select the {OBD System} and press the [YES] key.
5) On the «OBD Menu» display screen, select the {4. Diagnosis Code(s) Cleared} and press the [YES] key.
6) When the `Clear Diagnostic Code?' is shown on the display screen, press the [YES] key.
7) Turn the Subaru Select Monitor and ignition switch to OFF.

NOTE:
• For detailed operation procedure, refer to the SUBARU SELECT MONITOR OPERATION MANUAL.

3. OBD-II GENERAL SCAN TOOL

For clear memory procedures using the OBD-II general scan tool, refer to the OBD-II General Scan Tool Instruction Manual.

GETtheMANUALS.org

14.Compulsory Valve Operation Check Mode

A: OPERATION

1) Prepare the Subaru Select Monitor kit. <Ref. to EN(DOHC TURBO)-8, PREPARATION TOOL, General Description.>

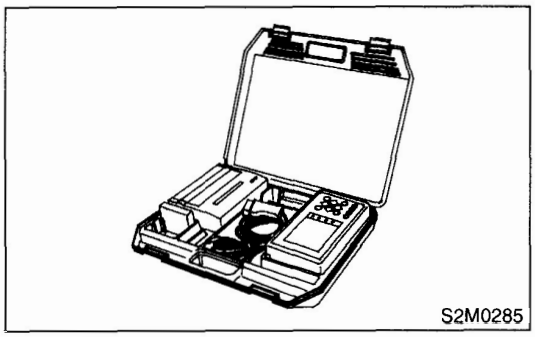

2) Connect the diagnosis cable to Subaru Select Monitor.
3) Insert the cartridge into Subaru Select Monitor. <Ref. to EN(DOHC TURBO)-8, PREPARATION TOOL, General Description.>

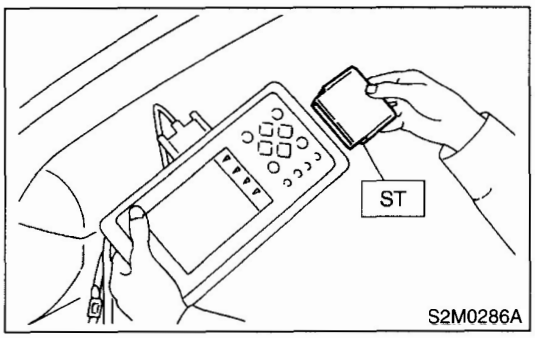

4) Connect the test mode connector (A) at the lower portion of instrument panel (on the driver's side), to the side of the center console box.

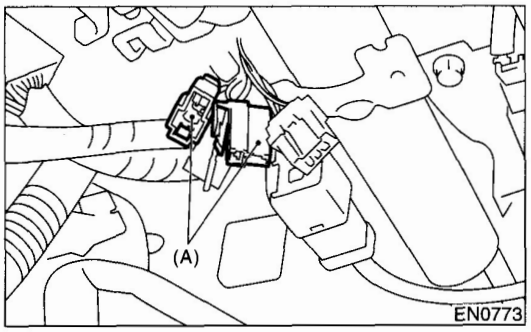

5) Connect the Subaru Select Monitor to data link connector.
(1) Connect the Subaru Select Monitor to data link connector located in the lower portion of the instrument panel (on the driver's side).

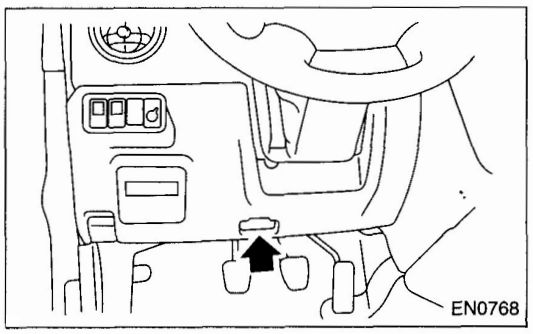

(2) Connect the diagnosis cable to data link connector.

CAUTION:
Do not connect scan tools except for Subaru Select Monitor and OBD-II general scan tool.

6) Turn the ignition switch to ON (engine OFF) and Subaru Select Monitor switch to ON.

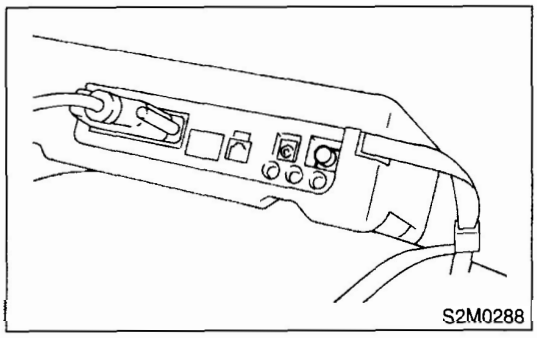

7) On the «Main Menu» display screen, select the {2. Each System Check} and press the [YES] key.
8) On the «System Selection Menu» display screen, select the {Engine Control System} and press the [YES] key.
9) Press the [YES] key after displayed the information of engine type.
10) On the «Engine Diagnosis» display screen, select the {System Operation Check Mode} and press the [YES] key.
11) On the «System Operation Check Mode» display screen, select the {Actuator ON/OFF Operation} and press the [YES] key.
12) Select the desired compulsory actuator on the «Actuator ON/OFF Operation» display screen and press the [YES] key.
13) Pressing the [NO] key completes the compulsory operation check mode. The display will then return to the «Actuator ON/OFF Operation» screen.

GETtheMANUALS.org

- A list of the support data is shown in the following table.

Contents	Display
Compulsory fuel pump relay operation check	Fuel Pump Relay
Compulsory radiator fan relay operation check	Radiator Fan Relay
Compulsory air conditioning relay operation check	A/C Compressor Relay
Compulsory purge control solenoid valve operation check	CPC Solenoid Valve
Compulsory fuel pressure control solenoid valve operation check	PCV Solenoid Valve
Compulsory drain valve operation check	Vent Control Solenoid Valve
Compulsory fuel tank pressure sensor control valve operation check	Fuel Tank Sensor Control Valve

NOTE:
- The following parts will be displayed but not functional because they are not installed on the vehicle.

Display
EGR Solenoid Valve
ASV Solenoid Valve
FICD Solenoid
Pressure Switching Sol. 1
Pressure Switching Sol. 2
AAI Solenoid Valve

- For detailed operation procedure, refer to the SUBARU SELECT MONITOR OPERATION MANUAL.

GETtheMANUALS.org

15.Engine Malfunction Indicator Lamp (MIL)

A: PROCEDURE

1. Activation of check engine malfunction indicator lamp (MIL). <Ref. to EN(DOHC TURBO)-53, ACTIVATION OF CHECK ENGINE MALFUNCTION INDICATOR LAMP (MIL), Engine Malfunction Indicator Lamp (MIL).>
↓
2. Check engine malfunction indicator lamp (MIL) does not come on. <Ref. to EN(DOHC TURBO)-54, CHECK ENGINE MALFUNCTION INDICATOR LAMP (MIL) DOES NOT COME ON., Engine Malfunction Indicator Lamp (MIL).>
↓
3. Check engine malfunction indicator lamp (MIL) does not go off. <Ref. to EN(DOHC TURBO)-56, CHECK ENGINE MALFUNCTION INDICATOR LAMP (MIL) DOES NOT GO OFF., Engine Malfunction Indicator Lamp (MIL).>
↓
4. Check engine malfunction indicator lamp (MIL) does not blink at a cycle of 3 Hz. <Ref. to EN(DOHC TURBO)-57, CHECK ENGINE MALFUNCTION INDICATOR LAMP (MIL) DOES NOT BLINK AT A CYCLE OF 3 HZ., Engine Malfunction Indicator Lamp (MIL).>
↓
5. Check engine malfunction indicator lamp (MIL) remains blinking at a cycle of 3 Hz. <Ref. to EN(DOHC TURBO)-60, CHECK ENGINE MALFUNCTION INDICATOR LAMP (MIL) REMAINS BLINKING AT A CYCLE OF 3 HZ., Engine Malfunction Indicator Lamp (MIL).>

GETtheMANUALS.org

B: ACTIVATION OF CHECK ENGINE MALFUNCTION INDICATOR LAMP (MIL)

1) When the ignition switch is turned to ON (engine off), the CHECK ENGINE malfunction indicator lamp (MIL) in the combination meter illuminates.

NOTE:
If the MIL does not illuminate, perform diagnostics of the CHECK ENGINE light circuit or the combination meter circuit. <Ref. to EN(DOHC TURBO)-54, CHECK ENGINE MALFUNCTION INDICATOR LAMP (MIL) DOES NOT COME ON., Engine Malfunction Indicator Lamp (MIL).>

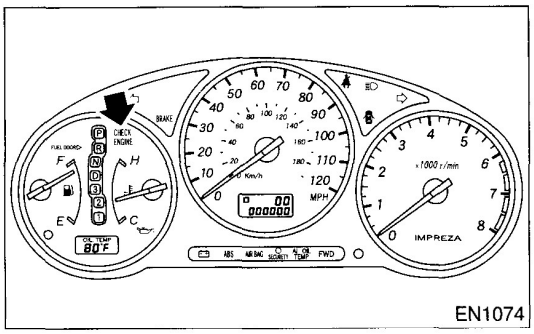

2) After starting the engine, the MIL goes out. If it does not, either the engine or the emission control system is malfunctioning.

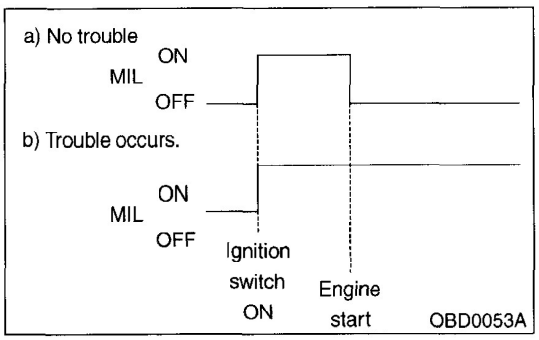

3) If the diagnosis system senses a misfire which could damage the catalyzer, the MIL will blink at a cycle of 1 Hz.

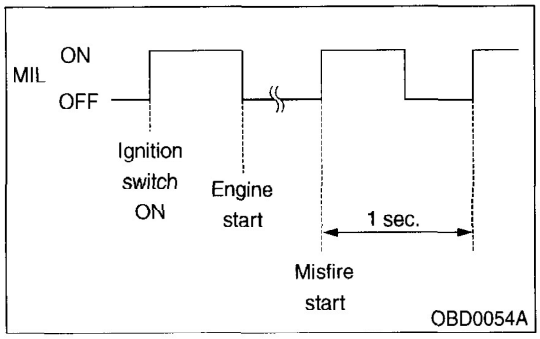

4) When the ignition switch is turned to ON (engine off) or to "START" with the test mode connector connected, the MIL blinks at a cycle of 3 Hz.

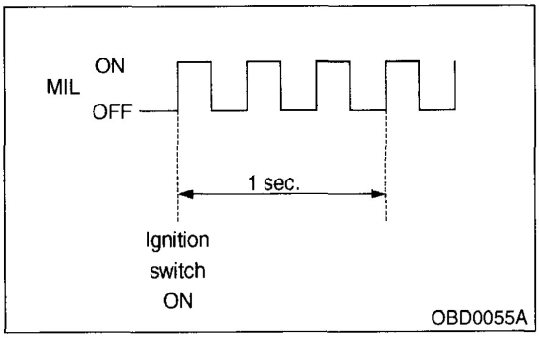

GETtheMANUALS.org

C: CHECK ENGINE MALFUNCTION INDICATOR LAMP (MIL) DOES NOT COME ON.

- **DIAGNOSIS:**
  - The CHECK ENGINE malfunction indicator lamp (MIL) circuit is open or shorted.
- **TROUBLE SYMPTOM:**
  - When the ignition switch is turned ON (engine OFF), MIL does not come on.
- **WIRING DIAGRAM:**

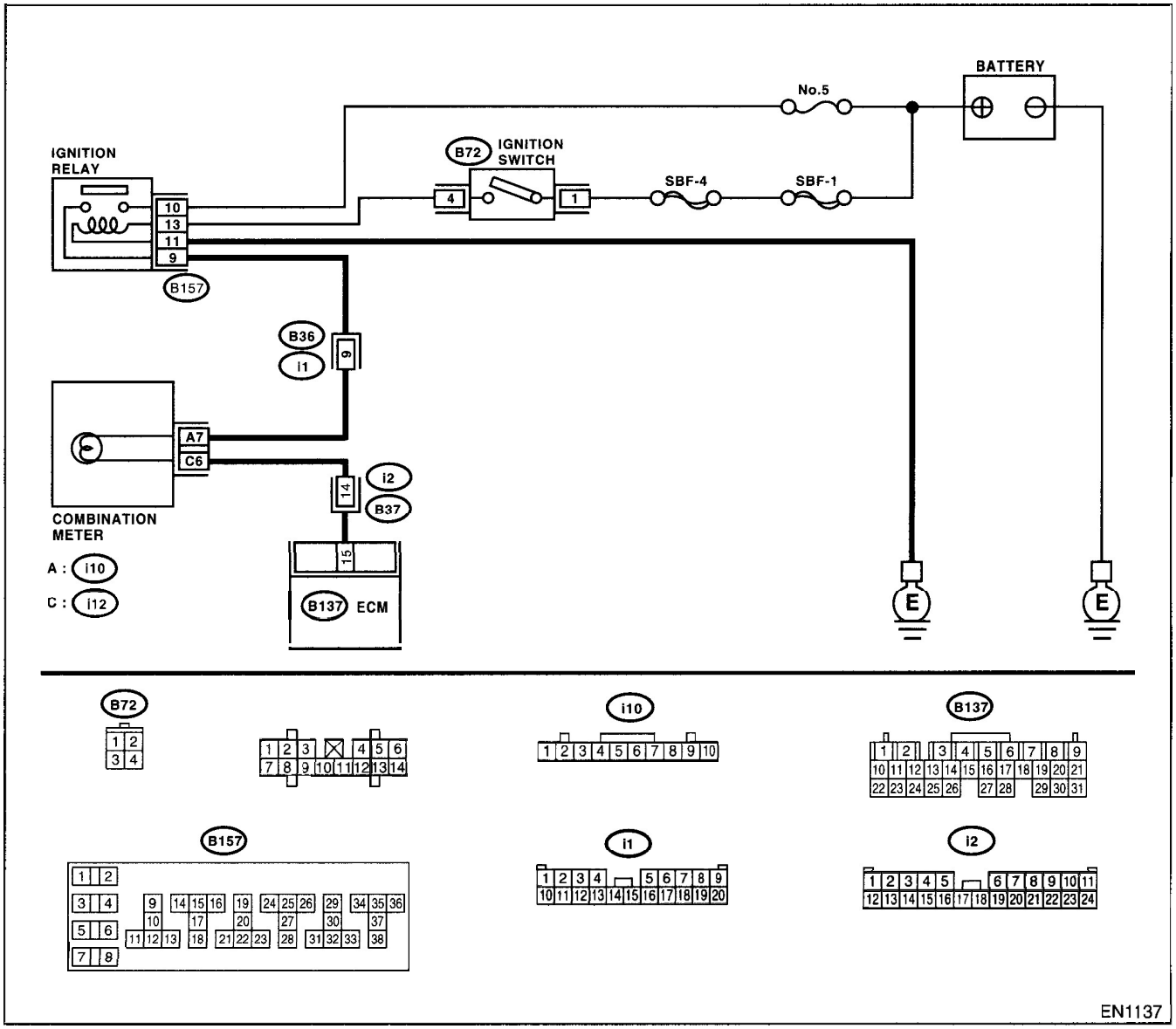

Step		Check	Yes	No
1	**CHECK OUTPUT SIGNAL FROM ECM.** 1)Turn the ignition switch to ON. 2)Measure the voltage between ECM connector and chassis ground. ***Connector & terminal*** ***(B137) No. 15 (+) — Chassis ground (–):***	Is the voltage less than 1 V?	Go to step **4.**	Go to step **2.**

GETtheMANUALS.org

Step	Check	Yes	No
CHECK POOR CONTACT.	)oes the MIL come on when haking or pulling ECM con-ector and harness?	Repair poor con-act in ECM con-ector.	Go to step **3.**
CHECK ECM CONNECTOR.	s the ECM connector correctly onnected?	Replace the ECM. :Ref. to FU(DOHC 'URBO)-47, Engine Control Module.>	Repair connection of ECM connector.
CHECK HARNESS BETWEEN COMBINATION METER AND ECM CONNECTOR. 1)Turn the ignition switch to OFF. 2)Remove the combination meter. <Ref. to IDI-11, Combination Meter Assembly.> 3)Disconnect the connector from ECM and combination meter. 4)Measure the resistance of harness between ECM and combination meter connector. ***Connector & terminal*** ***(B137) No. 15 — (i12) No. 6:***	s the resistance less than 1 2?	Go to step **5.**	Repair harness and connector. NOTE: In this case, repai the following: • Open circuit in harness between ECM and combination meter connector • Poor contact in coupling connecto
CHECK POOR CONTACT. Check poor contact in combination meter connector.	s there poor contact in combi-ation meter connector?	Repair poor con-act in combination neter connector.	Go to step **6.**
CHECK HARNESS BETWEEN COMBINATION METER AND IGNITION SWITCH CONNECTOR. 1)Turn the ignition switch to ON. 2)Measure the voltage between combination meter connector and chassis ground. ***Connector & terminal*** ***(i10) No. 7 (+) — Chassis ground (–):***	s the voltage more than 10 V?	Go to step **7.**	Check the following and repair if necessary. NOTE: • Broken down ignition relay. • Blown out fuse (No. 5). • If replaced fuse (No. 5) blows easily, check the harness for short circuit of harness between fuse (No. 5) and ignition relay connector. • Open or short circuit in harness between fuse (No. 5) and battery terminal • Open circuit in harness between fuse (No. 5) and ignition relay connector • Poor contact in ignition relay connector • Poor contact in ignition switch cor nector
CHECK LAMP BULB. Remove the engine malfunction indicator lamp bulb.	s the lamp bulb condition OK?	Repair combina-ion meter connec-or.	Replace the lamp bulb.

GETtheMANUALS.org

D: CHECK ENGINE MALFUNCTION INDICATOR LAMP (MIL) DOES NOT GO OFF.

- **DIAGNOSIS:**
  - The CHECK ENGINE malfunction indicator lamp (MIL) circuit is shorted.
- **TROUBLE SYMPTOM:**
  - Although MIL comes on when the engine runs, trouble code is not shown on the Subaru select monitor or OBD-II general scan tool display.
- **WIRING DIAGRAM:**

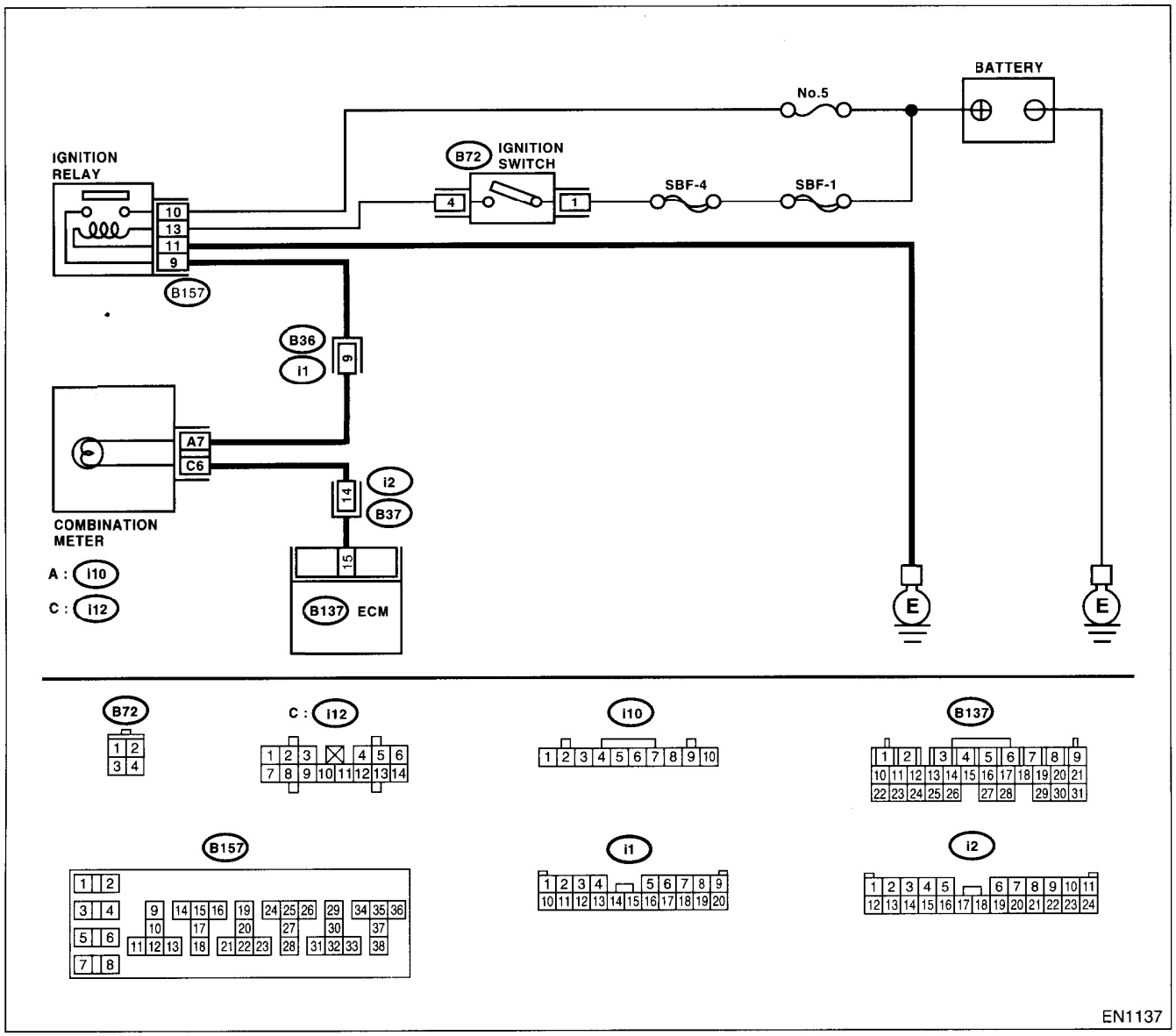

	Step	Check	Yes	No
1	**CHECK HARNESS BETWEEN COMBINATION METER AND ECM CONNECTOR.** 1)Turn the ignition switch to OFF. 2)Disconnect the connector from ECM. 3)Turn the ignition switch to ON.	Does the MIL come on?	Repair short circuit in harness between combination meter and ECM connector.	Replace the ECM. <Ref. to FU(DOHC TURBO)-47, Engine Control Module.>

GETtheMANUALS.org

E: CHECK ENGINE MALFUNCTION INDICATOR LAMP (MIL) DOES NOT BLINK AT A CYCLE OF 3 HZ.

- **DIAGNOSIS:**
  - The CHECK ENGINE malfunction indicator lamp (MIL) circuit is open or shorted.
  - Test mode connector circuit is in open.
- **TROUBLE SYMPTOM:**
  - When in inspection mode, MIL does not blink at a cycle of 3 Hz.

GETtheMANUALS.org

- **WIRING DIAGRAM:**

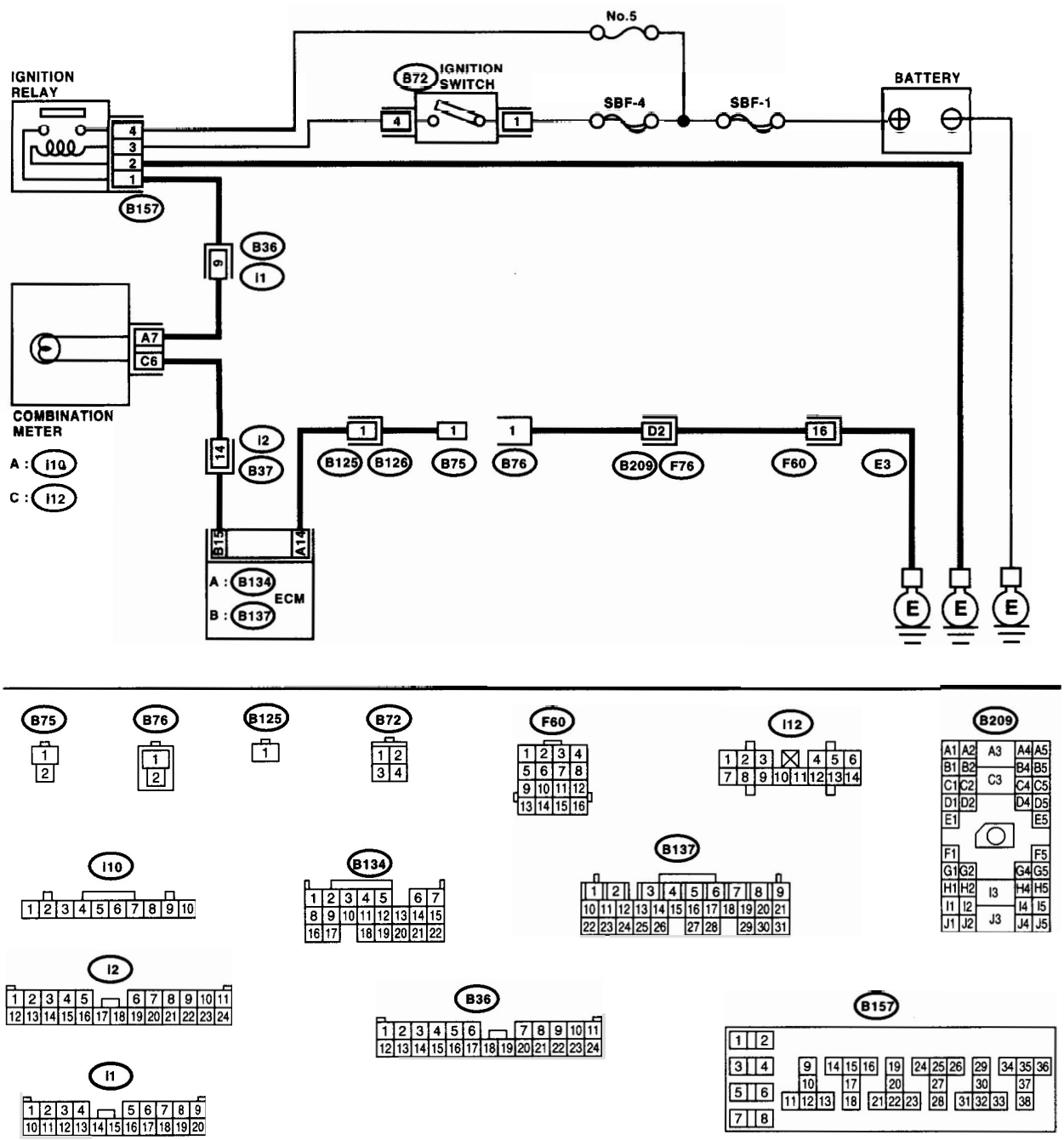

EN1138

GETtheMANUALS.org

	Step	Check	Yes	No
1	**CHECK STATUS OF CHECK ENGINE MALFUNCTION INDICATOR LAMP (MIL).** 1)Turn the ignition switch to OFF. 2)Disconnect the test mode connector. 3)Turn the ignition switch to ON. (engine OFF)	Does the MIL come on?	Go to step **2.**	Repair the MIL circuit. <Ref. to EN(DOHC TURBO)-54, CHECK ENGINE MALFUNCTION INDICATOR LAMP (MIL) DOES NOT COME ON., Engine Malfunction Indicator Lamp (MIL).>
2	**CHECK HARNESS BETWEEN COMBINATION METER AND ECM CONNECTOR.** 1)Turn the ignition switch to OFF. 2)Disconnect the connector from ECM. 3)Turn the ignition switch to ON.	Does the MIL come on?	Repair ground short circuit in harness between combination meter and ECM connector.	Go to step **3.**
3	**CHECK HARNESS BETWEEN TEST MODE CONNECTOR AND CHASSIS GROUND.** 1)Turn the ignition switch to OFF. 2)Disconnect the connector from ECM. 3)Measure the resistance of harness between test mode connector and chassis ground. ***Connector & terminal*** ***(B76) No. 1 — Chassis ground:***	Is the resistance less than 1 Ω?	Go to step **4.**	Repair harness and connector. NOTE: In this case, repair the following: • Open circuit in harness between test mode connector and chassis ground
4	**CHECK POOR CONTACT.** Check poor contact in ECM connector.	Is there poor contact in ECM connector?	Repair poor contact in ECM connector.	Go to step **5.**
5	**CHECK HARNESS BETWEEN ECM AND TEST MODE CONNECTOR.** 1)Connect the test mode connector. 2)Measure the resistance of harness between ECM and chassis ground. ***Connector & terminal*** ***(B134) No. 14 — Chassis ground:***	Is the resistance less than 1 Ω?	Go to step **6.**	Repair open circuit in harness between ECM and test mode connector.
6	**CHECK POOR CONTACT.** Check poor contact in ECM connector.	Is there poor contact in ECM connector?	Repair poor contact in ECM connector.	Replace the ECM. <Ref. to FU(DOHC TURBO)-47, Engine Control Module.>

GETMEMANUALS.org

F: CHECK ENGINE MALFUNCTION INDICATOR LAMP (MIL) REMAINS BLINKING AT A CYCLE OF 3 HZ.

- **DIAGNOSIS:**
  - Test mode connector circuit is shorted.
- **TROUBLE SYMPTOM:**
  - MIL blinks at a cycle of 3 Hz when the ignition switch is turned to ON.
- **WIRING DIAGRAM:**

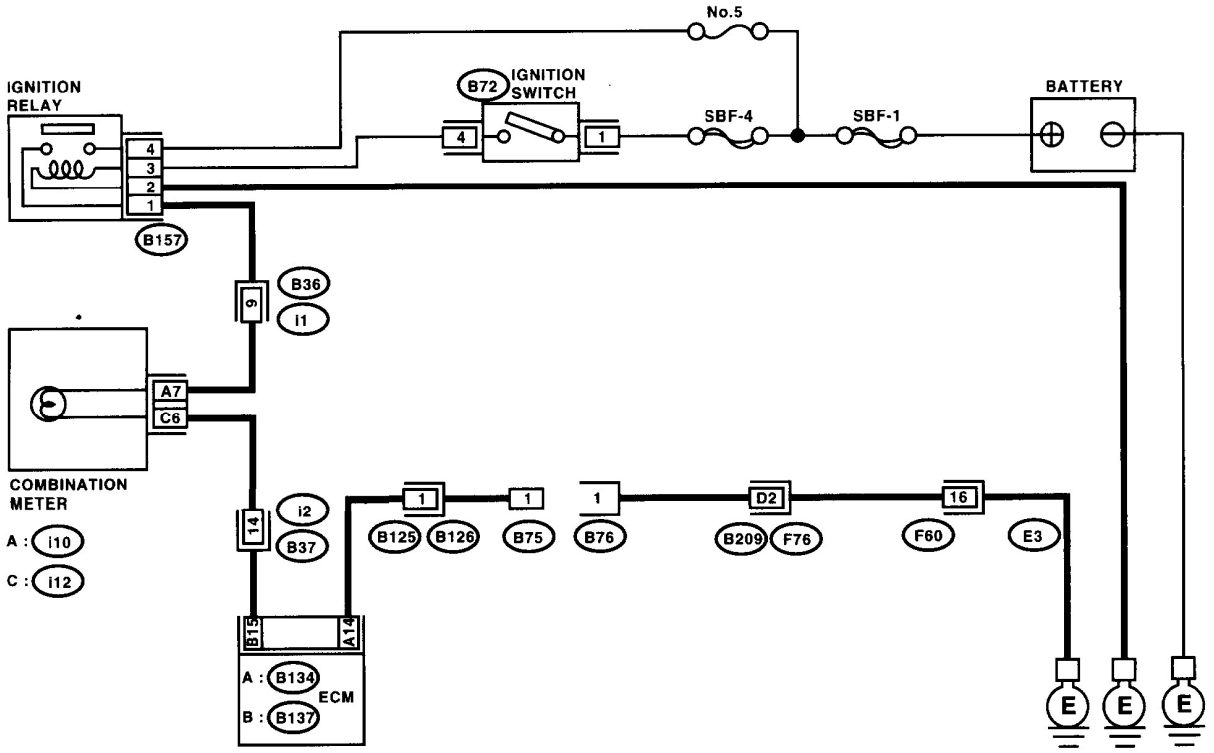

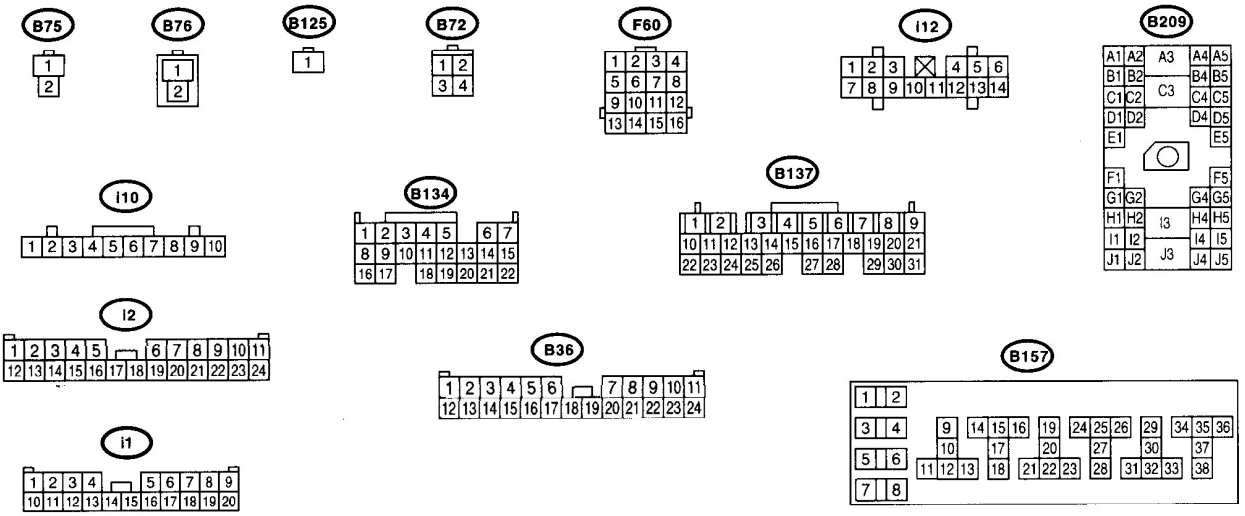

EN1138

GETtheMANUALS.org

	Step	Check	Yes	No
1	**CHECK TEST MODE CONNECTOR.** 1)Disconnect the test mode connector. 2)Turn the ignition switch to ON.	Does the MIL flash on and off?	Go to step **2.**	System is in good order. NOTE: MIL blinks at a cycle of 3 Hz when test mode connector is connected.
2	**CHECK HARNESS BETWEEN ECM CONNECTOR AND ENGINE GROUNDING TERMINAL.** 1)Turn the ignition switch to OFF. 2)Disconnect the connector from ECM. 3)Measure the resistance of harness between ECM connector and chassis ground. ***Connector & terminal*** ***(B134) No. 14 — Chassis ground:***	Is the resistance less than 5 Ω?	Repair short circuit in harness between ECM and test mode connector.	Replace the ECM. <Ref. to FU(DOHC TURBO)-47, Engine Control Module.>

GETtheMANUALS.org

GETtheMANUALS.org

16.Diagnostics for Engine Starting Failure

A: PROCEDURE

1. Inspection of starter motor circuit. <Ref. to EN(DOHC TURBO)-64, STARTER MOTOR CIRCUIT, Diagnostics for Engine Starting Failure.>
↓
2. Inspection of ECM power supply and ground line. <Ref. to EN(DOHC TURBO)-68, CONTROL MODULE POWER SUPPLY AND GROUND LINE, Diagnostics for Engine Starting Failure.>
↓
3. Inspection of ignition control system. <Ref. to EN(DOHC TURBO)-72, IGNITION CONTROL SYSTEM, Diagnostics for Engine Starting Failure.>
↓
4. Inspection of fuel pump circuit. <Ref. to EN(DOHC TURBO)-76, FUEL PUMP CIRCUIT, Diagnostics for Engine Starting Failure.>
↓
5. Inspection of fuel injector circuit. <Ref. to EN(DOHC TURBO)-78, FUEL INJECTOR CIRCUIT, Diagnostics for Engine Starting Failure.>

GETtheMANUALS.org

B: STARTER MOTOR CIRCUIT

CAUTION:
After repair or replacement of faulty parts, conduct CLEAR MEMORY MODE <Ref. to EN(DOHC TURBO)-49, Clear Memory Mode.> and INSPECTION MODE <Ref. to EN(DOHC TURBO)-46, Inspection Mode.>.

- **WIRING DIAGRAM:**

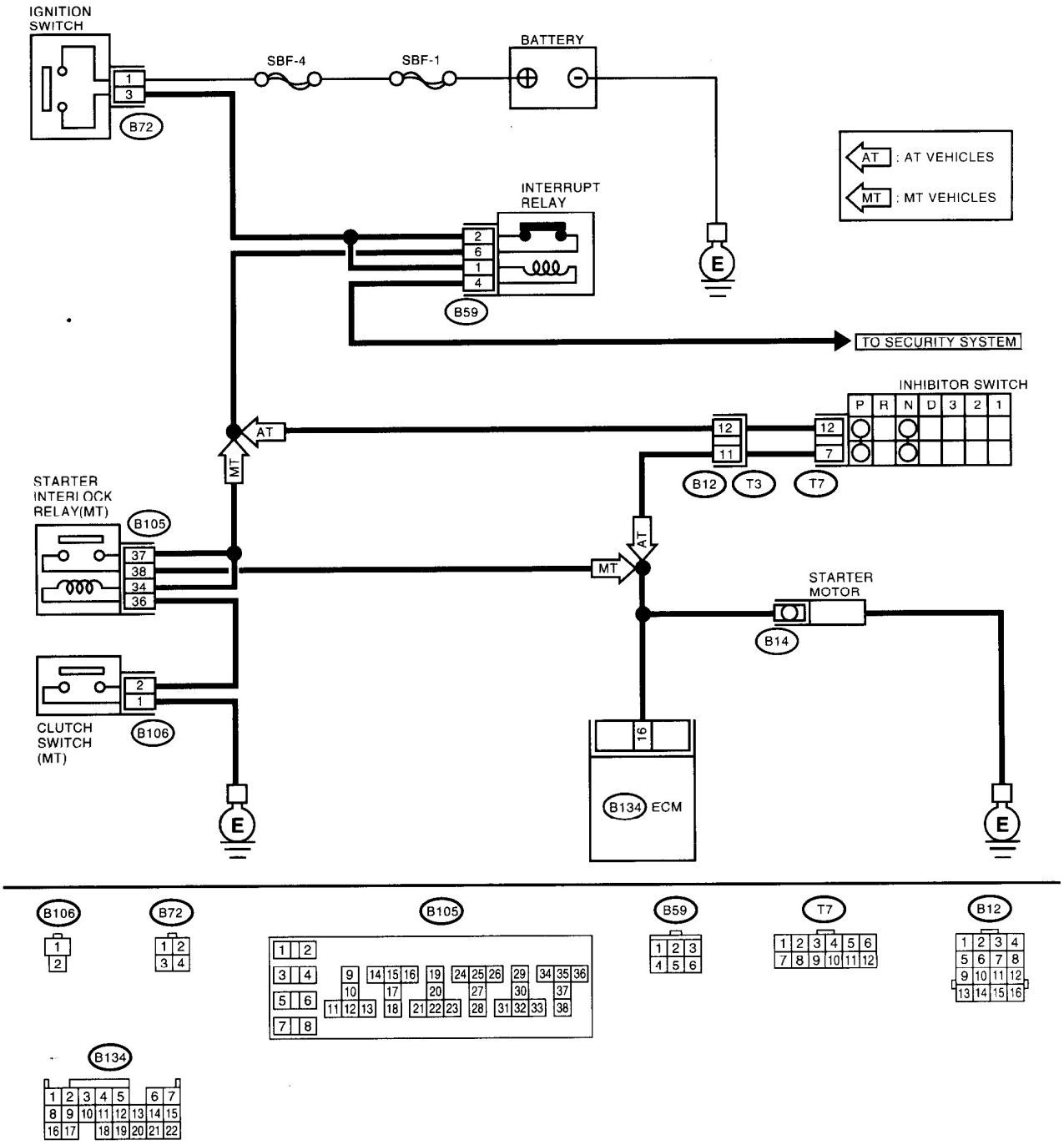

EN1139

GETtheMANUALS.org

DIAGNOSTICS FOR ENGINE STARTING FAILURE

	Step	Check	Yes	No
1	**CHECK OPERATION OF STARTER MOTOR.**	Does the starter motor operate when the switch starts?	Go to step **2.**	Go to step **3.**
2	**CHECK DTC.** <Ref. to EN(DOHC TURBO)-45, OPERATION, Read Diagnostic Trouble Code.>	Is the trouble code stored in memory? <Ref. to EN(DOHC TURBO)-80, LIST, List of Diagnostic Trouble Code (DTC).>	Record the DTC. Repair the trouble case. <Ref. to EN(DOHC TURBO)-88, Diagnostic Procedure with Diagnostic Trouble Code (DTC).>	Go to step **3.**
3	**CHECK INPUT SIGNAL FOR STARTER MOTOR.** 1)Turn the ignition switch to OFF. 2)Disconnect the connector from starter motor. 3)Turn the ignition switch to ST. 4)Measure the power supply voltage between starter motor connector terminal and engine ground. ***Connector & terminal*** ***(B14) No. 1 (+) — Engine ground (–):***	Is the voltage more than 10 V?	Go to step **4.**	Go to step **5.**
4	**CHECK GROUND CIRCUIT OF STARTER MOTOR.** 1)Turn the ignition switch to OFF. 2)Disconnect the terminal from starter motor. 3)Measure the resistance of ground cable between ground cable terminal and engine ground.	Is the resistance less than 5 Ω?	Check the starter motor. <Ref. to SC-6, Starter.>	Repair open circuit of ground cable.
5	**CHECK HARNESS BETWEEN ECM AND STARTER MOTOR CIRCUIT.** 1)Turn the ignition switch to OFF. 2)Measure the resistance between starter motor and ECM. ***Connector & terminal*** ***(B14) No. 1 — Engine ground:***	Is the resistance less than 1 Ω?	Repair ground short circuit.	Go to step **6.**
6	**CHECK HARNESS BETWEEN ECM AND STARTER MOTOR CIRCUIT.** 1)Turn the ignition switch to START. 2)Measure the resistance of fuse. ***Connector & terminal*** ***(B14) No. 1 — Engine ground:***	Is the resistance less than 1 Ω?	Go to step **7.**	Repair ground short circuit.
7	**CHECK HARNESS BETWEEN BATTERY AND IGNITION SWITCH CONNECTOR.** 1)Turn the ignition switch to OFF. 2)Disconnect the connector from ignition switch. 3)Measure the power supply voltage between ignition switch the connector and chassis ground. ***Connector & terminal*** ***(B72) No. 1 (+) — Chassis ground (–):***	Is the voltage more than 10 V?	Go to step **8.**	Repair open circuit in harness between ignition switch and battery.
8	**CHECK HARNESS BETWEEN BATTERY AND IGNITION SWITCH CONNECTOR.** 1)Connect the connector to ignition switch. 2)Turn the ignition switch to START. 3)Measure the voltage between ignition switch and chassis ground. ***Connector & terminal*** ***(B72) No. 3 (+) — Chassis ground (–):***	Is the voltage more than 10 V?	Repair open circuit between ignition switch and starter motor circuit.	Go to step **9.**

GETtheMANUALS.org

	Step	Check	Yes	No
9	**CHECK POOR CONTACT.** Check poor contact in ignition switch connector.	Is there poor contact in ignition switch connector?	Repair poor contact in ignition switch connector.	Replace the ignition switch.

GETtheMANUALS.org

GETtheMANUALS.org

C: CONTROL MODULE POWER SUPPLY AND GROUND LINE

CAUTION:
After repair or replacement of faulty parts, conduct CLEAR MEMORY MODE<Ref. to EN(DOHC TURBO)-49, Clear Memory Mode.> and INSPECTION MODE. <Ref. to EN(DOHC TURBO)-46, Inspection Mode.>

- **WIRING DIAGRAM:**

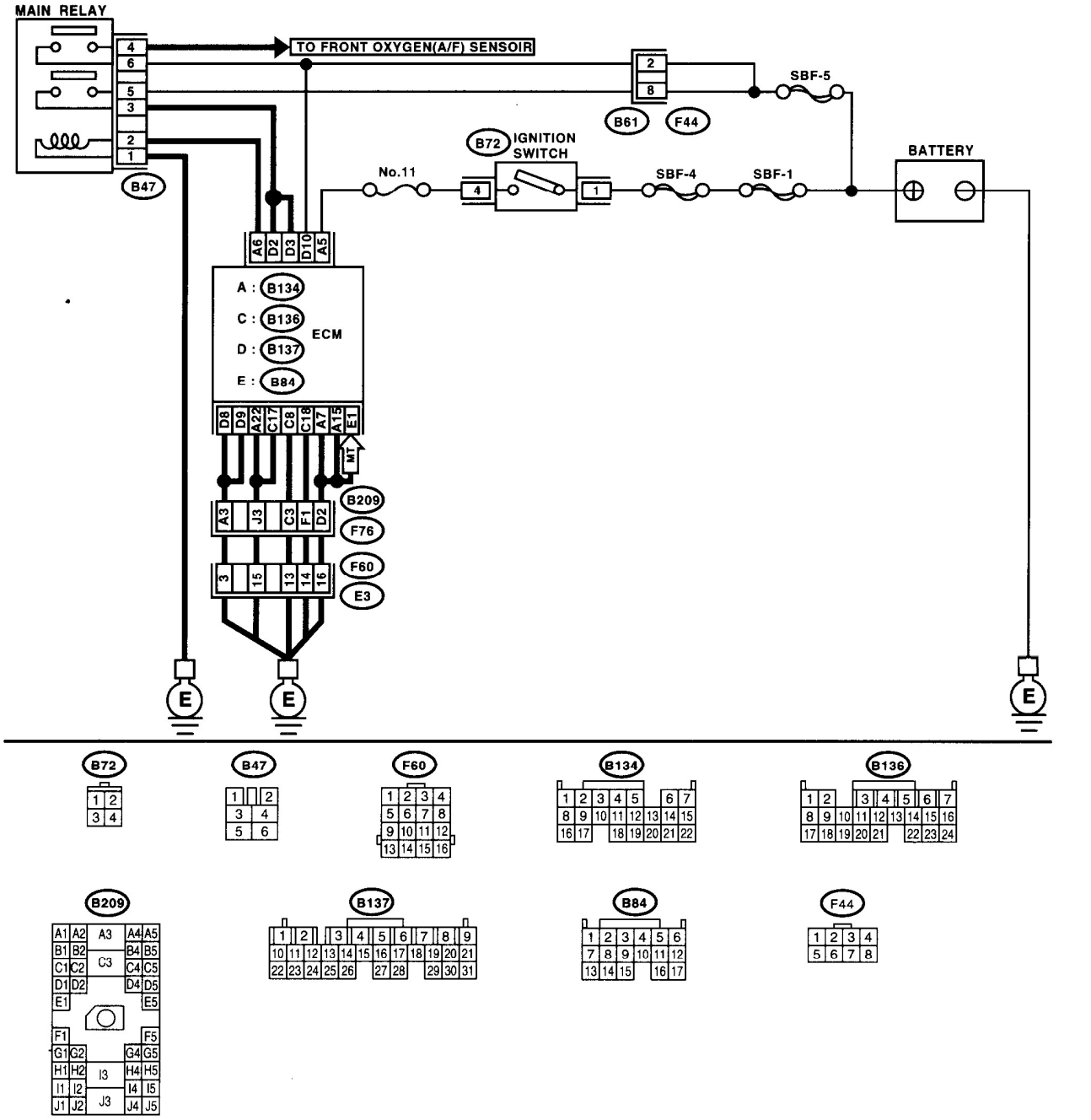

EN1171

GETtheMANUALS.org

Step	Check	Yes	No
CHECK MAIN RELAY. 1)Turn the ignition switch to OFF. 2)Remove the main relay. 3)Connect the battery to main relay terminals No. 1 and No. 2. 4)Measure the resistance between main relay terminals. ***Terminals*** ***No. 3 — No. 5:*** ***No. 4 — No. 6:***	s the resistance less than 10 Ω?	ɜo to step **2.**	Replace the main relay.
CHECK GROUND CIRCUIT OF ECM. 1)Disconnect the connector from ECM. 2)Measure the resistance of harness between ECM and chassis ground. ***Connector & terminal*** ***(B134) No. 7 — Chassis ground:*** ***(B134) No. 15 — Chassis ground:*** ***(B134) No. 22 — Chassis ground:*** ***(B136) No. 8 — Chassis ground:*** ***(B136) No. 17 — Chassis ground:*** ***(B136) No. 18 — Chassis ground:*** ***(B137) No. 8 — Chassis ground:*** ***(B137) No. 9 — Chassis ground:*** ***(B84) No. 1 — Chassis ground: (MT vehicle)***	s the resistance less than 5 Ω?	ɜo to step **3.**	Repair open circuit in harness between ECM connector and engine grounding terminal.
CHECK INPUT VOLTAGE OF ECM. Measure the voltage between ECM connector and chassis ground. ***Connector & terminal*** ***(B137) No. 10 (+) — Chassis ground (–):*** ***(B134) No. 5 (+) — Chassis ground (–):***	s the voltage more than 10 V?	ɜo to step **4.**	Repair open or ground short circuit of power supply circuit.
CHECK HARNESS BETWEEN ECM AND MAIN RELAY CONNECTOR. 1)Turn the ignition switch to OFF. 2)Disconnect the connector from ECM. 3)Measure the resistance between ECM and chassis ground. ***Connector & terminal*** ***(B134) No. 6 — Chassis ground:***	s the resistance more than 1 MΩ?	ɜo to step **5.**	Repair ground short circuit in harness between ECM connector and main relay connector, then replace the ECM.
CHECK OUTPUT VOLTAGE FROM ECM. 1)Connect the connector to ECM. 2)Turn the ignition switch to ON. 3)Measure the voltage between ECM connector and chassis ground. ***Connector & terminal*** ***(B134) No. 6 (+) — Chassis ground (–):***	s the voltage more than 10 V?	ɜo to step **6.**	Replace the ECM. <Ref. to FU(DOHC TURBO)-47, Engine Control Module.>
CHECK INPUT VOLTAGE OF MAIN RELAY. Check the voltage between main relay connector and chassis ground. ***Connector & terminal*** ***(B47) No. 2 (+) — Chassis ground (–):***	s the voltage more than 10 V?	ɜo to step **7.**	Repair open circuit in harness between ECM connector and main relay connector.
CHECK GROUND CIRCUIT OF MAIN RELAY. 1)Turn the ignition switch to OFF. 2)Measure the resistance between main relay connector and chassis ground. ***Connector & terminal*** ***(B47) No. 1 — Chassis ground:***	s the resistance less than 5 Ω?	ɜo to step **8.**	Repair open circuit between main relay and chassis ground.

GETtheMANUALS.org

DIAGNOSTICS FOR ENGINE STARTING FAILURE

	Step	Check	Yes	No
8	**CHECK INPUT VOLTAGE OF MAIN RELAY.** Measure the voltage between main relay connector and chassis ground. ***Connector & terminal*** ***(B47) No. 5 (+) — Chassis ground (–):*** ***(B47) No. 6 (+) — Chassis ground (–):***	Is the voltage more than 10 V?	Go to step **9.**	Repair open or ground short circuit in harness of power supply circuit.
	CHECK INPUT VOLTAGE OF ECM. 1)Connect the main relay connector. 2)Turn the ignition switch to ON. 3)Measure the voltage between ECM connector and chassis ground. ***Connector & terminal*** ***(B137) No. 2 (+) — Chassis ground (–):*** ***(B137) No. 3 (+) — Chassis ground (–):***	Is the voltage more than 10 V?	Check ignition control system. <Ref. to EN(DOHC TURBO)-72, IGNITION CONTROL SYSTEM, Diagnostics for Engine Starting Failure.>	Repair open or ground short circuit in harness between ECM connector and main relay connector.

GETtheMANUALS.org

GETtheMANUALS.org

D: IGNITION CONTROL SYSTEM

CAUTION:
After repair or replacement of faulty parts, conduct CLEAR MEMORY MODE <Ref. to EN(DOHC TURBO)-49, Clear Memory Mode.> and INSPECTION MODE <Ref. to EN(DOHC TURBO)-46, Inspection Mode.>.

- **WIRING DIAGRAM:**

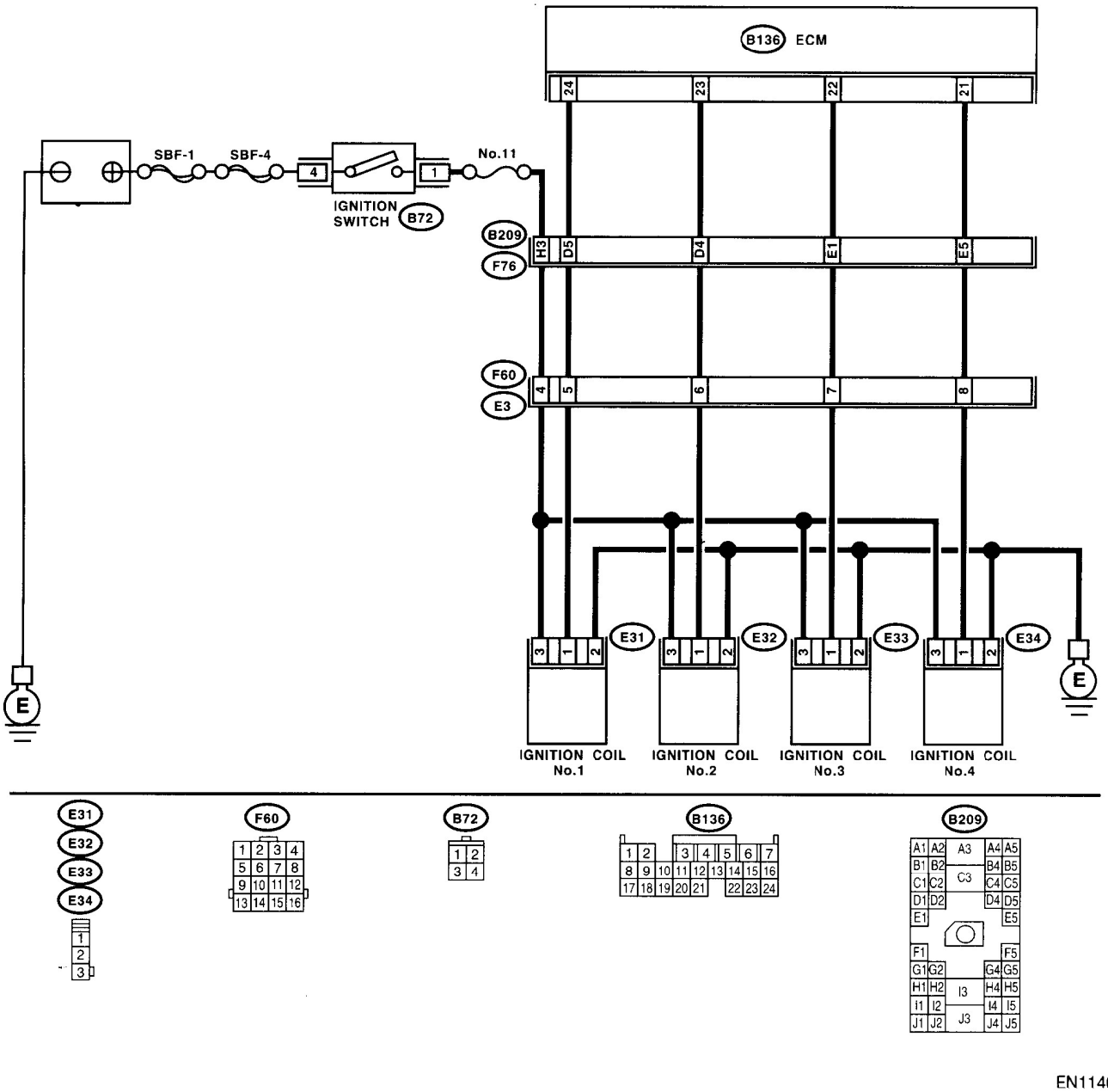

EN1140

GETtheMANUALS.org

DIAGNOSTICS FOR ENGINE STARTING FAILURE

	Step	Check	Yes	No
	CHECK SPARK PLUG CONDITION. 1)Remove the spark plug. <Ref. to IG(DOHC TURBO)-5, INSTALLATION, Spark Plug.> 2)Check the spark plug condition. <Ref. to IG(DOHC TURBO)-6, INSPECTION, Spark Plug.>	s the spark plug's status OK?	Go to step **2.**	Replace the spark plug.
	CHECK IGNITION SYSTEM FOR SPARKS. 1)Connect the spark plug to ignition coil. 2)Release the fuel pressure. <Ref. to FU(DOHC TURBO)-51, RELEASING OF FUEL PRESSURE, OPERATION, Fuel.> 3)Contact the spark plug's thread portion on engine. 4)While opening the throttle valve fully, crank the engine to check that spark occurs at each cylinder.	Does spark occur at each cylinder?	Check fuel pump system. <Ref. to EN(DOHC TURBO)-76, FUEL PUMP CIRCUIT, Diagnostics for Engine Starting Failure.>	Go to step **3.**
	CHECK POWER SUPPLY CIRCUIT FOR IGNITION COIL & IGNITOR ASSEMBLY. 1)Turn the ignition switch to OFF. 2)Disconnect the connector from ignition coil & ignitor assembly. 3)Turn the ignition switch to ON. 4)Measure the power supply voltage between ignition coil & ignitor assembly connector and engine ground. ***Connector & terminal*** ***(E31) No. 3 (+) — Engine ground (–):*** ***(E32) No. 3 (+) — Engine ground (–):*** ***(E33) No. 3 (+) — Engine ground (–):*** ***(E34) No. 3 (+) — Engine ground (–):***	s the voltage more than 10 V?	Go to step **4.**	Repair harness and connector. NOTE: In this case, repai the following: • Open circuit in harness between ignition coil & ignitor assembly, and ignition switch connector • Poor contact in coupling connectors
	CHECK HARNESS OF IGNITION COIL & IGNITOR ASSEMBLY GROUND CIRCUIT. 1)Turn the ignition switch to OFF. 2)Measure the resistance between ignition coi & ignitor assembly connector and engine ground. ***Connector & terminal*** ***(E31) No. 2 — Engine ground:*** ***(E32) No. 2 — Engine ground:*** ***(E33) No. 2 — Engine ground:*** ***(E34) No. 2 — Engine ground:***	s the resistance between less han 5 Ω?	Go to step **5.**	Repair harness and connector. NOTE: In this case, repai the following: • Open circuit in harness between ignition coil & ignitor assembly connector and engine grounding termina
	CHECK HARNESS BETWEEN ECM AND IGNITION COIL & IGNITOR ASSEMBLY CONNECTOR. 1)Turn the ignition switch to OFF. 2)Disconnect the connector from ECM. 3)Disconnect the connector from ignition coil & ignitor assembly. 4)Measure the resistance of harness between ECM and ignition coil & ignitor assembly connector. ***Connector & terminal*** ***(B136) No. 21 — (E34) No. 1:*** ***(B136) No. 22 — (E33) No. 1:*** ***(B136) No. 23 — (E32) No. 1:*** ***(B136) No. 24 — (E31) No. 1:***	s the resistance less than 1 Ω?	Go to step **6.**	Repair harness and connector. NOTE: In this case, repai the following: • Open circuit in harness between ECM and ignition coil & ignitor assembly connector • Poor contact in coupling connecto

GETtheMANUALS.org

DIAGNOSTICS FOR ENGINE STARTING FAILURE

	Step	Check	Yes	No
6	**CHECK HARNESS BETWEEN ECM AND IGNITION COIL & IGNITOR ASSEMBLY CONNECTOR.** Measure the resistance of harness between ECM and engine ground. ***Connector & terminal:*** ***(B136) No. 21 — Engine ground:*** ***(B136) No. 22 — Engine ground:*** ***(B136) No. 23 — Engine ground:*** ***(B136) No. 24 — Engine ground:***	Is the resistance more than 1 MΩ?	Go to step **7.**	Repair ground short circuit in harness between ECM and ignition coil & ignitor assembly connector.
7	**CHECK POOR CONTACT.** Check poor contact in ECM connector.	Is there poor contact in ECM connector?	Repair poor contact in ECM connector.	Replace the ignition coil and ignitor assembly.

GETtheMANUALS.org

GETtheMANUALS.org

E: FUEL PUMP CIRCUIT

CAUTION:
After repair or replacement of faulty parts, conduct CLEAR MEMORY MODE <Ref. to EN(DOHC TURBO)-49, Clear Memory Mode.> and INSPECTION MODE <Ref. to EN(DOHC TURBO)-46, Inspection Mode.>.

- **WIRING DIAGRAM:**

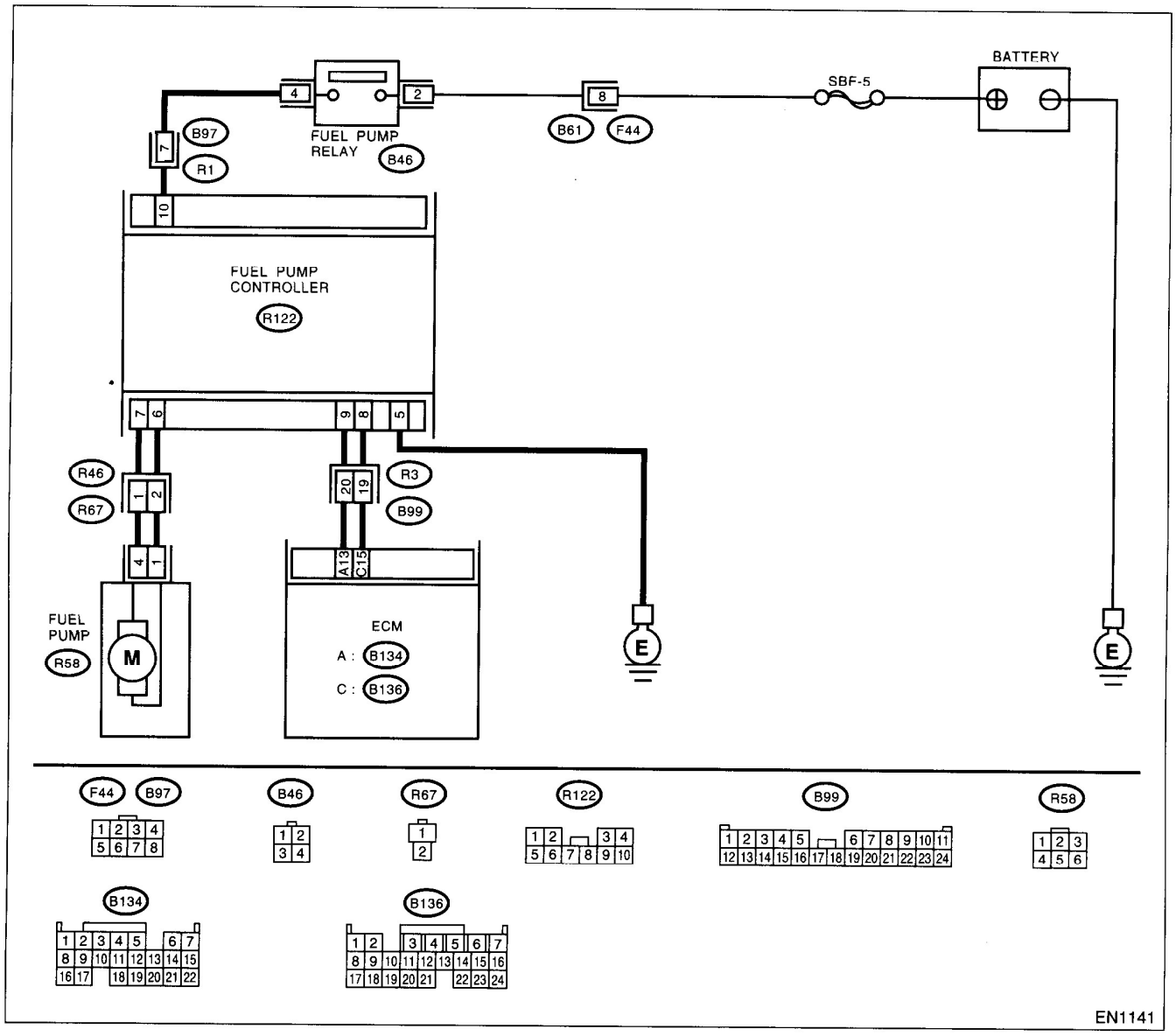

GETtheMANUALS.org

	Step	Check	Yes	No
1	**CHECK OPERATING SOUND OF FUEL PUMP.** Make sure that fuel pump is in operation for two seconds when turning the ignition switch to ON. NOTE: Fuel pump operation can also be executed using Subaru Select Monitor (Function mode: FD01). For the procedure, refer to "Compulsory Valve Operation Check Mode". <Ref. to EN(DOHC TURBO)-50, Compulsory Valve Operation Check Mode.>	Does the fuel pump produce operating sound?	Check the fuel injector circuit. <Ref. to EN(DOHC TURBO)-78, FUEL INJECTOR CIRCUIT, Diagnostics for Engine Starting Failure.>	Record the DTC. Repair the trouble case. <Ref. to EN(DOHC TURBO)-88, Diagnostic Procedure with Diagnostic Trouble Code (DTC).>

GETtheMANUALS.org

F: FUEL INJECTOR CIRCUIT

CAUTION:
- **Check or repair only faulty parts.**
- **After repair or replacement of faulty parts, conduct CLEAR MEMORY MODE <Ref. to EN(DOHC TURBO)-49, Clear Memory Mode.> and INSPECTION MODE. <Ref. to EN(DOHC TURBO)-46, Inspection Mode.>**
- **WIRING DIAGRAM:**

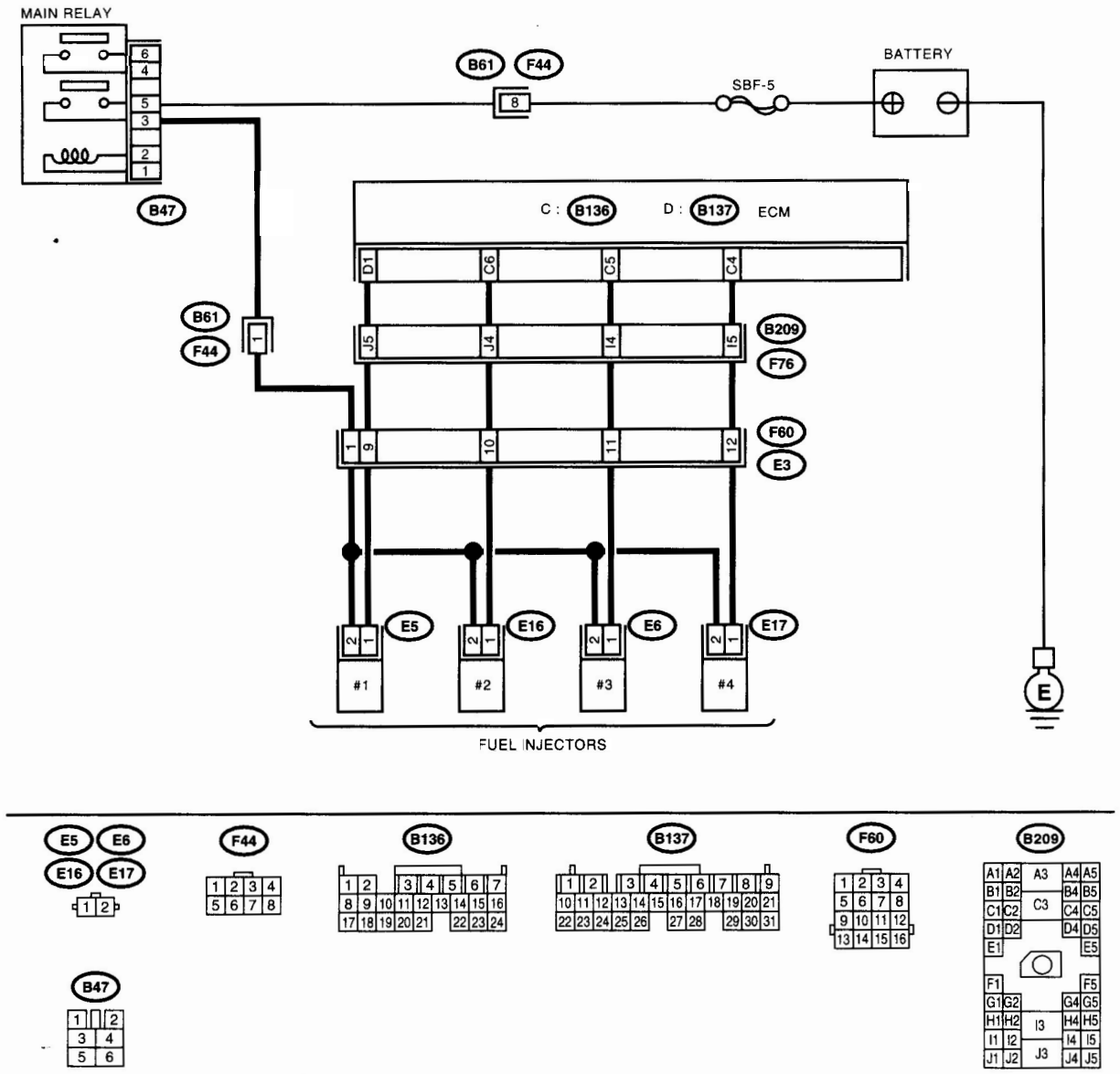

EN1142

GETtheMANUALS.org

DIAGNOSTICS FOR ENGINE STARTING FAILURE

	Step	Check	Yes	No
1	**CHECK OPERATION OF EACH FUEL INJECTOR.** While cranking the engine, check that each fuel injector emits "operating" sound. Use a sound scope or attach a screwdriver to the injector for this check.	Is the fuel injector emits "operating" sound?	Check the fuel pressure. <Ref. to ME(DOHC TURBO)-27, INSPECTION, Fuel Pressure.>	Go to step **2.**
2	**CHECK POWER SUPPLY TO EACH FUEL INJECTOR.** 1)Turn the ignition switch to OFF. 2)Disconnect the connector from #1 cylinder fuel injector. 3)Turn the ignition switch to ON. 4)Measure the power supply voltage between the fuel injector terminal and engine ground. ***Connector & terminal*** ***#1 (E5) No. 2 (+) — Engine ground (–):*** ***#2 (E16) No. 2 (+) — Engine ground (–):*** ***#3 (E6) No. 2 (+) — Engine ground (–):*** ***#4 (E17) No. 2 (+) — Engine ground (–):***	Is the voltage more than 10 V?	Go to step **3.**	Repair harness and connector. NOTE: In this case, repair the following: • Open circuit in harness between main relay and fuel injector connector • Poor contact in main relay connector • Poor contact in coupling connector • Poor contact in fuel injector connector
3	**CHECK HARNESS BETWEEN ECM AND FUEL INJECTOR CONNECTOR.** 1)Disconnect the connector from ECM. 2)Measure the resistance of harness between ECM and fuel injector connector. ***Connector & terminal*** ***(B137) No. 1 — (E5) No. 1:*** ***(B136) No. 6 — (E16) No. 1:*** ***(B136) No. 5 — (E6) No. 1:*** ***(B136) No. 4 — (E6) No. 1:***	Is the resistance less than 1 Ω?	Go to step **4.**	Repair harness and connector. NOTE: In this case, repair the following: • Open circuit in harness between ECM and fuel injector connector • Poor contact in coupling connector
4	**CHECK HARNESS BETWEEN ECM AND FUEL INJECTOR CONNECTOR.** Measure the resistance of harness between ECM and fuel injector connector. ***Connector & terminal*** ***(B137) No. 1 — Chassis ground:*** ***(B136) No. 6 — Chassis ground:*** ***(B136) No. 5 — Chassis ground:*** ***(B136) No. 4 — Chassis ground:***	Is the resistance less than 1 Ω?	Repair ground short circuit in harness between ECM and fuel injector connector.	Go to step **5.**
5	**CHECK EACH FUEL INJECTOR.** 1)Turn the ignition switch to OFF. 2)Measure the resistance between each fuel injector terminals. ***Terminals*** ***No. 1 — No. 2:***	Is the resistance between 5 and 20 Ω?	Go to step **6.**	Replace the faulty fuel injector.
6	**CHECK POOR CONTACT.** Check poor contact in ECM connector.	Is there poor contact in ECM connector?	Repair poor contact in ECM connector.	Inspection using "General Diagnostic Table". <Ref. to EN(DOHC TURBO)-372, INSPECTION, General Diagnostic Table.>

GETtheMANUALS.org

17.List of Diagnostic Trouble Code (DTC)

A: LIST

DTC No.	Item	Index
P0031	Front oxygen (A/F) sensor heater circuit low input	<Ref. to EN(DOHC TURBO)-88, DTC P0031 — FRONT OXYGEN (A/F) SENSOR HEATER CIRCUIT LOW INPUT —, Diagnostic Procedure with Diagnostic Trouble Code (DTC).>
P0032	Front oxygen (A/F) sensor heater circuit high input	<Ref. to EN(DOHC TURBO)-92, DTC P0032 — FRONT OXYGEN (A/F) SENSOR HEATER CIRCUIT HIGH INPUT —, Diagnostic Procedure with Diagnostic Trouble Code (DTC).>
P0037	Rear oxygen sensor heater circuit malfunction	<Ref. to EN(DOHC TURBO)-94, DTC P0037 — REAR OXYGEN SENSOR HEATER CIRCUIT MALFUNCTION —, Diagnostic Procedure with Diagnostic Trouble Code (DTC).>
P0038	Rear oxygen sensor heater circuit high input	<Ref. to EN(DOHC TURBO)-98, DTC P0038 — REAR OXYGEN SENSOR HEATER CIRCUIT HIGH INPUT —, Diagnostic Procedure with Diagnostic Trouble Code (DTC).>
P0101	Mass air flow sensor circuit range/performance problem (high input)	<Ref. to EN(DOHC TURBO)-100, DTC P0101 — MASS AIR FLOW SENSOR CIRCUIT RANGE/PERFORMANCE PROBLEM (HIGH INPUT) —, Diagnostic Procedure with Diagnostic Trouble Code (DTC).>
P0102	Mass air flow sensor circuit low input	<Ref. to EN(DOHC TURBO)-102, DTC P0102 — MASS AIR FLOW SENSOR CIRCUIT LOW INPUT —, Diagnostic Procedure with Diagnostic Trouble Code (DTC).>
P0103	Mass air flow sensor circuit high input	<Ref. to EN(DOHC TURBO)-106, DTC P0103 — MASS AIR FLOW SENSOR CIRCUIT HIGH INPUT —, Diagnostic Procedure with Diagnostic Trouble Code (DTC).>
P0106	Pressure sensor circuit range/performance problem (low input)	<Ref. to EN(DOHC TURBO)-108, DTC P0106 — PRESSURE SENSOR CIRCUIT RANGE/PERFORMANCE PROBLEM (LOW INPUT) —, Diagnostic Procedure with Diagnostic Trouble Code (DTC).>
P0107	Pressure sensor circuit low input	<Ref. to EN(DOHC TURBO)-110, DTC P0107 — PRESSURE SENSOR CIRCUIT LOW INPUT —, Diagnostic Procedure with Diagnostic Trouble Code (DTC).>
P0108	Pressure sensor circuit high input	<Ref. to EN(DOHC TURBO)-114, DTC P0108 — PRESSURE SENSOR CIRCUIT HIGH INPUT —, Diagnostic Procedure with Diagnostic Trouble Code (DTC).>
P0111	Intake air temperature sensor circuit range/performance problem	<Ref. to EN(DOHC TURBO)-118, DTC P0111 — INTAKE AIR TEMPERATURE SENSOR CIRCUIT RANGE/PERFORMANCE PROBLEM —, Diagnostic Procedure with Diagnostic Trouble Code (DTC).>
P0112	Intake air temperature sensor circuit low input	<Ref. to EN(DOHC TURBO)-120, DTC P0112 — INTAKE AIR TEMPERATURE SENSOR CIRCUIT LOW INPUT —, Diagnostic Procedure with Diagnostic Trouble Code (DTC).>
P0113	Intake air temperature sensor circuit high input	<Ref. to EN(DOHC TURBO)-122, DTC P0113 — INTAKE AIR TEMPERATURE SENSOR CIRCUIT HIGH INPUT —, Diagnostic Procedure with Diagnostic Trouble Code (DTC).>
P0117	Engine coolant temperature sensor circuit low input	<Ref. to EN(DOHC TURBO)-126, DTC P0117 — ENGINE COOLANT TEMPERATURE SENSOR CIRCUIT LOW INPUT —, Diagnostic Procedure with Diagnostic Trouble Code (DTC).>
P0118	Engine coolant temperature sensor circuit high input	<Ref. to EN(DOHC TURBO)-128, DTC P0118 — ENGINE COOLANT TEMPERATURE SENSOR CIRCUIT HIGH INPUT —, Diagnostic Procedure with Diagnostic Trouble Code (DTC).>
P0121	Throttle position sensor circuit range/performance problem (high input)	<Ref. to EN(DOHC TURBO)-132, DTC P0121 — THROTTLE POSITION SENSOR CIRCUIT RANGE/PERFORMANCE PROBLEM (HIGH INPUT) —, Diagnostic Procedure with Diagnostic Trouble Code (DTC).>
P0122	Throttle position sensor circuit low input	<Ref. to EN(DOHC TURBO)-134, DTC P0122 — THROTTLE POSITION SENSOR CIRCUIT LOW INPUT —, Diagnostic Procedure with Diagnostic Trouble Code (DTC).>

GETtheMANUALS.org

DTC No.	Item	Index
P0123	Throttle position sensor circuit high input	<Ref. to EN(DOHC TURBO)-138, DTC P0123 — THROTTLE POSITION SENSOR CIRCUIT HIGH INPUT —, Diagnostic Procedure with Diagnostic Trouble Code (DTC).>
P0125	Insufficient coolant temperature for closed loop fuel control	<Ref. to EN(DOHC TURBO)-140, DTC P0125 — INSUFFICIENT COOLANT TEMPERATURE FOR CLOSED LOOP FUEL CONTROL —, Diagnostic Procedure with Diagnostic Trouble Code (DTC).>
P0128	Thermostat malfunction	<Ref. to EN(DOHC TURBO)-142, DTC P0128 — THERMOSTAT MALFUNCTION —, Diagnostic Procedure with Diagnostic Trouble Code (DTC).>
P0131	Front oxygen (A/F) sensor circuit range/performance problem (low input)	<Ref. to EN(DOHC TURBO)-143, DTC P0131 — FRONT OXYGEN (A/F) SENSOR CIRCUIT RANGE/PERFORMANCE PROBLEM (LOW INPUT) —, Diagnostic Procedure with Diagnostic Trouble Code (DTC).>
P0132	Front oxygen (A/F) sensor circuit range/performance problem (high input)	<Ref. to EN(DOHC TURBO)-144, DTC P0132 — FRONT OXYGEN (A/F) SENSOR CIRCUIT RANGE/PERFORMANCE PROBLEM (HIGH INPUT) —, Diagnostic Procedure with Diagnostic Trouble Code (DTC).>
P0133	Front oxygen (A/F) sensor circuit slow response	<Ref. to EN(DOHC TURBO)-146, DTC P0133 — FRONT OXYGEN (A/F) SENSOR CIRCUIT SLOW RESPONSE —, Diagnostic Procedure with Diagnostic Trouble Code (DTC).>
P0136	Rear oxygen sensor circuit malfunction	<Ref. to EN(DOHC TURBO)-148, DTC P0136 — REAR OXYGEN SENSOR CIRCUIT MALFUNCTION —, Diagnostic Procedure with Diagnostic Trouble Code (DTC).>
P0139	Rear oxygen sensor circuit slow response	<Ref. to EN(DOHC TURBO)-150, DTC P0139 — REAR OXYGEN SENSOR CIRCUIT SLOW RESPONSE —, Diagnostic Procedure with Diagnostic Trouble Code (DTC).>
P0171	Fuel trim malfunction (A/F too lean)	<Ref. to EN(DOHC TURBO)-152, DTC P0171 — FUEL TRIM MALFUNCTION (A/F TOO LEAN) —, Diagnostic Procedure with Diagnostic Trouble Code (DTC).>
P0172	Fuel trim malfunction (A/F too rich)	<Ref. to EN(DOHC TURBO)-153, DTC P0172 — FUEL TRIM MALFUNCTION (A/F TOO RICH) —, Diagnostic Procedure with Diagnostic Trouble Code (DTC).>
P0181	Fuel temperature sensor A circuit range/performance problem	<Ref. to EN(DOHC TURBO)-156, DTC P0181 — FUEL TEMPERATURE SENSOR A CIRCUIT RANGE/PERFORMANCE PROBLEM —, Diagnostic Procedure with Diagnostic Trouble Code (DTC).>
P0182	Fuel temperature sensor A circuit low input	<Ref. to EN(DOHC TURBO)-158, DTC P0182 — FUEL TEMPERATURE SENSOR A CIRCUIT LOW INPUT —, Diagnostic Procedure with Diagnostic Trouble Code (DTC).>
P0183	Fuel temperature sensor A circuit high input	<Ref. to EN(DOHC TURBO)-160, DTC P0183 — FUEL TEMPERATURE SENSOR A CIRCUIT HIGH INPUT —, Diagnostic Procedure with Diagnostic Trouble Code (DTC).>
P0244	Wastegate control solenoid valve malfunction (high input)	<Ref. to EN(DOHC TURBO)-164, DTC P0244 — WASTEGATE CONTROL SOLENOID VALVE MALFUNCTION (HIGH INPUT) —, Diagnostic Procedure with Diagnostic Trouble Code (DTC).>
P0245	Wastegate control solenoid valve circuit low input	<Ref. to EN(DOHC TURBO)-166, DTC P0245 — WASTEGATE CONTROL SOLENOID VALVE CIRCUIT LOW INPUT —, Diagnostic Procedure with Diagnostic Trouble Code (DTC).>
P0246	Wastegate control solenoid valve circuit high input	<Ref. to EN(DOHC TURBO)-170, DTC P0246 — WASTEGATE CONTROL SOLENOID VALVE CIRCUIT HIGH INPUT —, Diagnostic Procedure with Diagnostic Trouble Code (DTC).>
P0301	Cylinder 1 misfire detected	<Ref. to EN(DOHC TURBO)-172, DTC P0301 — CYLINDER 1 MISFIRE DETECTED —, Diagnostic Procedure with Diagnostic Trouble Code (DTC).>
P0302	Cylinder 2 misfire detected	<Ref. to EN(DOHC TURBO)-172, DTC P0302 — CYLINDER 2 MISFIRE DETECTED —, Diagnostic Procedure with Diagnostic Trouble Code (DTC).>
P0303	Cylinder 3 misfire detected	<Ref. to EN(DOHC TURBO)-172, DTC P0303 — CYLINDER 3 MISFIRE DETECTED —, Diagnostic Procedure with Diagnostic Trouble Code (DTC).>
P0304	Cylinder 4 misfire detected	<Ref. to EN(DOHC TURBO)-173, DTC P0304 — CYLINDER 4 MISFIRE DETECTED —, Diagnostic Procedure with Diagnostic Trouble Code (DTC).>

GETtheMANUALS.org

LIST OF DIAGNOSTIC TROUBLE CODE (DTC)

DTC No.	Item	Index
P0327	Knock sensor circuit low input	<Ref. to EN(DOHC TURBO)-182, DTC P0327 — KNOCK SENSOR CIRCUIT LOW INPUT —, Diagnostic Procedure with Diagnostic Trouble Code (DTC).>
P0328	Knock sensor circuit high input	<Ref. to EN(DOHC TURBO)-184, DTC P0328 — KNOCK SENSOR CIRCUIT HIGH INPUT —, Diagnostic Procedure with Diagnostic Trouble Code (DTC).>
P0335	Crankshaft position sensor circuit malfunction	<Ref. to EN(DOHC TURBO)-186, DTC P0335 — CRANKSHAFT POSITION SENSOR CIRCUIT MALFUNCTION —, Diagnostic Procedure with Diagnostic Trouble Code (DTC).>
P0336	Crankshaft position sensor circuit range/performance problem	<Ref. to EN(DOHC TURBO)-188, DTC P0336 — Crankshaft Position Sensor Circuit Range/Performance Problem —, Diagnostic Procedure with Diagnostic Trouble Code (DTC).>
P0340	Camshaft position sensor circuit malfunction	<Ref. to EN(DOHC TURBO)-190, DTC P0340 — CAMSHAFT POSITION SENSOR CIRCUIT MALFUNCTION —, Diagnostic Procedure with Diagnostic Trouble Code (DTC).>
P0341	Camshaft position sensor circuit range/performance problem	<Ref. to EN(DOHC TURBO)-192, DTC P0341 — CAMSHAFT POSITION SENSOR CIRCUIT RANGE/PERFORMANCE PROBLEM —, Diagnostic Procedure with Diagnostic Trouble Code (DTC).>
P0420	Catalyst system efficiency below threshold	<Ref. to EN(DOHC TURBO)-196, DTC P0420 — CATALYST SYSTEM EFFICIENCY BELOW THRESHOLD —, Diagnostic Procedure with Diagnostic Trouble Code (DTC).>
P0442	Evaporative emission control system malfunction	<Ref. to EN(DOHC TURBO)-199, DTC P0442 — EVAPORATIVE EMISSION CONTROL SYSTEM MALFUNCTION —, Diagnostic Procedure with Diagnostic Trouble Code (DTC).>
P0444	Evaporative emission control system purge control valve circuit low input	<Ref. to EN(DOHC TURBO)-204, DTC P0444 — EVAPORATIVE EMISSION CONTROL SYSTEM PURGE CONTROL VALVE CIRCUIT LOW INPUT —, Diagnostic Procedure with Diagnostic Trouble Code (DTC).>
P0445	Evaporative emission control system purge control valve circuit high input	<Ref. to EN(DOHC TURBO)-208, DTC P0445 — EVAPORATIVE EMISSION CONTROL SYSTEM PURGE CONTROL VALVE CIRCUIT HIGH INPUT —, Diagnostic Procedure with Diagnostic Trouble Code (DTC).>
P0447	Evaporative emission control system vent control low input	<Ref. to EN(DOHC TURBO)-210, DTC P0447 — EVAPORATIVE EMISSION CONTROL SYSTEM VENT CONTROL LOW INPUT —, Diagnostic Procedure with Diagnostic Trouble Code (DTC).>
P0448	Evaporative emission control system vent control high input	<Ref. to EN(DOHC TURBO)-214, DTC P0448 — EVAPORATIVE EMISSION CONTROL SYSTEM VENT CONTROL HIGH INPUT —, Diagnostic Procedure with Diagnostic Trouble Code (DTC).>
P0451	Evaporative emission control system pressure sensor range/performance problem	<Ref. to EN(DOHC TURBO)-216, DTC P0451 — EVAPORATIVE EMISSION CONTROL SYSTEM PRESSURE SENSOR RANGE/PERFORMANCE PROBLEM —, Diagnostic Procedure with Diagnostic Trouble Code (DTC).>
P0452	Evaporative emission control system pressure sensor low input	<Ref. to EN(DOHC TURBO)-218, DTC P0452 — EVAPORATIVE EMISSION CONTROL SYSTEM PRESSURE SENSOR LOW INPUT —, Diagnostic Procedure with Diagnostic Trouble Code (DTC).>
P0453	Evaporative emission control system pressure sensor high input	<Ref. to EN(DOHC TURBO)-222, DTC P0453 — EVAPORATIVE EMISSION CONTROL SYSTEM PRESSURE SENSOR HIGH INPUT —, Diagnostic Procedure with Diagnostic Trouble Code (DTC).>
P0461	Fuel level sensor circuit range/performance problem	<Ref. to EN(DOHC TURBO)-225, DTC P0461 — FUEL LEVEL SENSOR CIRCUIT RANGE/PERFORMANCE PROBLEM —, Diagnostic Procedure with Diagnostic Trouble Code (DTC).>
P0462	Fuel level sensor circuit low input	<Ref. to EN(DOHC TURBO)-228, DTC P0462 — FUEL LEVEL SENSOR CIRCUIT LOW INPUT —, Diagnostic Procedure with Diagnostic Trouble Code (DTC).>
P0463	Fuel level sensor circuit high input	<Ref. to EN(DOHC TURBO)-232, DTC P0463 — FUEL LEVEL SENSOR CIRCUIT HIGH INPUT —, Diagnostic Procedure with Diagnostic Trouble Code (DTC).>

GETtheMANUALS.org

DTC No.	Item	Index
P0464	Fuel level sensor intermittent input	<Ref. to EN(DOHC TURBO)-236, DTC P0464 — FUEL LEVEL SENSOR INTERMITTENT INPUT—, Diagnostic Procedure with Diagnostic Trouble Code (DTC).>
P0480	Cooling fan relay 1 circuit low input	<Ref. to EN(DOHC TURBO)-239, DTC P0480 — COOLING FAN RELAY 1 CIRCUIT LOW INPUT —, Diagnostic Procedure with Diagnostic Trouble Code (DTC).>
P0483	Cooling fan function problem	<Ref. to EN(DOHC TURBO)-243, DTC P0483 — COOLING FAN FUNCTION PROBLEM —, Diagnostic Procedure with Diagnostic Trouble Code (DTC).>
P0500	Vehicle speed sensor malfunction	<Ref. to EN(DOHC TURBO)-246, DTC P0500 — VEHICLE SPEED SENSOR MALFUNCTION —, Diagnostic Procedure with Diagnostic Trouble Code (DTC).>
P0506	Idle control system RPM lower than expected	<Ref. to EN(DOHC TURBO)-248, DTC P0506 — IDLE CONTROL SYSTEM RPM LOWER THAN EXPECTED —, Diagnostic Procedure with Diagnostic Trouble Code (DTC).>
P0507	Idle control system RPM higher than expected	<Ref. to EN(DOHC TURBO)-250, DTC P0507 — IDLE CONTROL SYSTEM RPM HIGHER THAN EXPECTED —, Diagnostic Procedure with Diagnostic Trouble Code (DTC).>
P0508	Idle control system circuit low input	<Ref. to EN(DOHC TURBO)-252, DTC P0508 — IDLE CONTROL SYSTEM CIRCUIT LOW INPUT —, Diagnostic Procedure with Diagnostic Trouble Code (DTC).>
P0509	Idle control system circuit high input	<Ref. to EN(DOHC TURBO)-254, DTC P0509 — IDLE CONTROL SYSTEM CIRCUIT HIGH INPUT —, Diagnostic Procedure with Diagnostic Trouble Code (DTC).>
P0512	Starter switch circuit high input	<Ref. to EN(DOHC TURBO)-257, DTC P0512 — STARTER SWITCH CIRCUIT HIGH INPUT —, Diagnostic Procedure with Diagnostic Trouble Code (DTC).>
P0545	Exhaust gas temperature sensor circuit low input	<Ref. to EN(DOHC TURBO)-260, DTC P0545 — EXHAUST GAS TEMPERATURE SENSOR CIRCUIT LOW INPUT —, Diagnostic Procedure with Diagnostic Trouble Code (DTC).>
P0546	Exhaust gas temperature sensor circuit high input	<Ref. to EN(DOHC TURBO)-262, DTC P0546 — EXHAUST GAS TEMPERATURE SENSOR CIRCUIT HIGH INPUT —, Diagnostic Procedure with Diagnostic Trouble Code (DTC).>
P0604	Internal control module memory check sum error	<Ref. to EN(DOHC TURBO)-266, DTC P0604 — INTERNAL CONTROL MODULE MEMORY CHECK SUM ERROR —, Diagnostic Procedure with Diagnostic Trouble Code (DTC).>
P0703	Brake switch input malfunction	<Ref. to EN(DOHC TURBO)-268, DTC P0703 — BRAKE SWITCH INPUT MALFUNCTION —, Diagnostic Procedure with Diagnostic Trouble Code (DTC).>
P0705	Transmission range sensor circuit malfunction	<Ref. to AT-115, CHECK INHIBITOR SWITCH., Diagnostic Procedure for No-Diagnostic Trouble Code (DTC).>
P0710	Transmission fluid temperature sensor circuit malfunction	<Ref. to AT-48, DTC 27 ATF TEMPERATURE SENSOR, Diagnostic Procedure with Diagnostic Trouble Code (DTC).>
P0715	Torque converter turbine speed sensor circuit malfunction	<Ref. to AT-62, DTC 36 TORQUE CONVERTER TURBINE SPEED SENSOR, Diagnostic Procedure with Diagnostic Trouble Code (DTC).>
P0720	Output speed sensor (vehicle speed sensor 2) circuit malfunction	<Ref. to AT-57, DTC 33 FRONT VEHICLE SPEED SENSOR, Diagnostic Procedure with Diagnostic Trouble Code (DTC).>
P0725	Engine speed input circuit malfunction	<Ref. to AT-44, DTC 11 ENGINE SPEED SIGNAL, Diagnostic Procedure with Diagnostic Trouble Code (DTC).>
P0731	Gear 1 incorrect ratio	<Ref. to EN(DOHC TURBO)-270, DTC P0731 — GEAR 1 INCORRECT RATIO —, Diagnostic Procedure with Diagnostic Trouble Code (DTC).>
P0732	Gear 2 incorrect ratio	<Ref. to EN(DOHC TURBO)-270, DTC P0732 — GEAR 2 INCORRECT RATIO —, Diagnostic Procedure with Diagnostic Trouble Code (DTC).>
P0733	Gear 3 incorrect ratio	<Ref. to EN(DOHC TURBO)-270, DTC P0733 — GEAR 3 INCORRECT RATIO —, Diagnostic Procedure with Diagnostic Trouble Code (DTC).>

GETtheMANUALS.org

LIST OF DIAGNOSTIC TROUBLE CODE (DTC)

DTC No.	Item	Index
P0734	Gear 4 incorrect ratio	<Ref. to EN(DOHC TURBO)-270, DTC P0734 — GEAR 4 INCORRECT RATIO —, Diagnostic Procedure with Diagnostic Trouble Code (DTC).>
P0741	Torque converter clutch system malfunction	<Ref. to EN(DOHC TURBO)-272, DTC P0741 — TORQUE CONVERTER CLUTCH SYSTEM MALFUNCTION —, Diagnostic Procedure with Diagnostic Trouble Code (DTC).>
P0743	Torque converter clutch system (Lock-up duty solenoid) electrical	<Ref. to AT-94, DTC 77 LOCK-UP DUTY SOLENOID, Diagnostic Procedure with Diagnostic Trouble Code (DTC).>
P0748	Pressure control solenoid (Line pressure duty solenoid) electrical	<Ref. to AT-86, DTC 75 LINE PRESSURE DUTY SOLENOID, Diagnostic Procedure with Diagnostic Trouble Code (DTC).>
P0753	Shift solenoid A (Shift solenoid 1) electrical	<Ref. to AT-70, DTC 71 SHIFT SOLENOID 1, Diagnostic Procedure with Diagnostic Trouble Code (DTC).>
P0758	Shift solenoid B (Shift solenoid 2) electrical	<Ref. to AT-74, DTC 72 SHIFT SOLENOID 2, Diagnostic Procedure with Diagnostic Trouble Code (DTC).>
P0778	2-4 brake pressure control solenoid valve (2-4 brake duty solenoid) circuit malfunction	<Ref. to AT-90, DTC 76 2–4 BRAKE DUTY SOLENOID, Diagnostic Procedure with Diagnostic Trouble Code (DTC).>
P0785	2-4 brake timing control solenoid valve (2-4 brake timing solenoid) circuit malfunction	<Ref. to AT-82, DTC 74 2-4 BRAKE TIMING SOLENOID, Diagnostic Procedure with Diagnostic Trouble Code (DTC).>
P1086	Tumble generator valve #2 (LH) position sensor circuit low input	<Ref. to EN(DOHC TURBO)-274, DTC P1086 — TUMBLE GENERATOR VALVE #2 (LH) POSITION SENSOR CIRCUIT LOW INPUT —, Diagnostic Procedure with Diagnostic Trouble Code (DTC).>
P1087	Tumble generator valve #2 (LH) position sensor circuit high input	<Ref. to EN(DOHC TURBO)-278, DTC P1087 — TUMBLE GENERATOR VALVE #2 (LH) POSITION SENSOR CIRCUIT HIGH INPUT —, Diagnostic Procedure with Diagnostic Trouble Code (DTC).>
P1088	Tumble generator valve #1 (RH) position sensor circuit low input	<Ref. to EN(DOHC TURBO)-280, DTC P1088 — TUMBLE GENERATOR VALVE #1 (RH) POSITION SENSOR CIRCUIT LOW INPUT —, Diagnostic Procedure with Diagnostic Trouble Code (DTC).>
P1089	Tumble generator valve #1 (RH) position sensor circuit high input	<Ref. to EN(DOHC TURBO)-284, DTC P1089 — TUMBLE GENERATOR VALVE #1 (RH) POSITION SENSOR CIRCUIT HIGH INPUT —, Diagnostic Procedure with Diagnostic Trouble Code (DTC).>
P1090	Tumble generator valve #1(RH) malfunction (stuck open)	<Ref. to EN(DOHC TURBO)-286, DTC P1090 — TUMBLE GENERATOR VALVE SYSTEM #1 (RH) MALFUNCTION (STUCK OPEN) —, Diagnostic Procedure with Diagnostic Trouble Code (DTC).>
P1091	Tumble generator valve #1(RH) malfunction (stuck close)	<Ref. to EN(DOHC TURBO)-287, DTC P1091 — TUMBLE GENERATOR VALVE SYSTEM #1 (RH) MALFUNCTION (STUCK CLOSE) —, Diagnostic Procedure with Diagnostic Trouble Code (DTC).>
P1092	Tumble generator valve #2(LH) malfunction (stuck open)	<Ref. to EN(DOHC TURBO)-288, DTC P1092 — TUMBLE GENERATOR VALVE SYSTEM #2 (LH) MALFUNCTION (STUCK OPEN) —, Diagnostic Procedure with Diagnostic Trouble Code (DTC).>
P1093	Tumble generator valve #2(LH) malfunction (stuck close)	<Ref. to EN(DOHC TURBO)-289, DTC P1093 — TUMBLE GENERATOR VALVE SYSTEM #2 (LH) MALFUNCTION (STUCK CLOSE) —, Diagnostic Procedure with Diagnostic Trouble Code (DTC).>
P1094	Tumble generator valve circuit #1 (opencircuit)	<Ref. to EN(DOHC TURBO)-290, DTC P1094 — TUMBLE GENERATOR VALVE CIRCUIT #1 (OPEN CIRCUIT) —, Diagnostic Procedure with Diagnostic Trouble Code (DTC).>
P1095	Tumble generator valve circuit #1 (overcurrent)	<Ref. to EN(DOHC TURBO)-292, DTC P1095 — TUMBLE GENERATOR VALVE CIRCUIT #1 (OVERCURRENT) —, Diagnostic Procedure with Diagnostic Trouble Code (DTC).>
P1096	Tumble generator valve circuit #2 (opencircuit)	<Ref. to EN(DOHC TURBO)-294, DTC P1096 — TUMBLE GENERATOR VALVE CIRCUIT #2 (OPEN CIRCUIT) —, Diagnostic Procedure with Diagnostic Trouble Code (DTC).>
P1097	Tumble generator valve circuit #2 (overcurrent)	<Ref. to EN(DOHC TURBO)-296, DTC P1097 — TUMBLE GENERATOR VALVE CIRCUIT #2 (OVERCURRENT) —, Diagnostic Procedure with Diagnostic Trouble Code (DTC).>

GETtheMANUALS.org

DTC No.	Item	Index
P1110	Atmospheric pressure sensor low input	<Ref. to EN(DOHC TURBO)-297, DTC P1110 — ATMOSPHERIC PRESSURE SENSOR CIRCUIT LOW INPUT —, Diagnostic Procedure with Diagnostic Trouble Code (DTC).>
P1111	Atmospheric pressure sensor high input	<Ref. to EN(DOHC TURBO)-297, DTC P1111 — ATMOSPHERIC PRESSURE SENSOR CIRCUIT HIGH INPUT —, Diagnostic Procedure with Diagnostic Trouble Code (DTC).>
P1112	Atmospheric pressure sensor range/performance problem	<Ref. to EN(DOHC TURBO)-298, DTC P1112 — ATMOSPHERIC PRESSURE SENSOR CIRCUIT RANGE/PERFORMANCE PROBLEM —, Diagnostic Procedure with Diagnostic Trouble Code (DTC).>
P1130	Front oxygen sensor circuit malfunction (open circuit)	<Ref. to EN(DOHC TURBO)-300, DTC P1130 — FRONT OXYGEN (A/F) SENSOR CIRCUIT MALFUNCTION (OPEN CIRCUIT) —, Diagnostic Procedure with Diagnostic Trouble Code (DTC).>
P1131	Front oxygen sensor circuit malfunction (short circuit)	<Ref. to EN(DOHC TURBO)-302, DTC P1131 — FRONT OXYGEN (A/F) SENSOR CIRCUIT MALFUNCTION (SHORT CIRCUIT) —, Diagnostic Procedure with Diagnostic Trouble Code (DTC).>
P1134	Front oxygen (A/F) sensor micro-computer problem	<Ref. to EN(DOHC TURBO)-304, DTC P1134 — FRONT OXYGEN (A/F) SENSOR MICRO-COMPUTER PROBLEM —, Diagnostic Procedure with Diagnostic Trouble Code (DTC).>
P1139	Front oxygen (A/F) sensor #1 heater circuit perfomance/range problem	<Ref. to EN(DOHC TURBO)-306, DTC P1139 — FRONT OXYGEN (A/F) SENSOR #1 HEATER CIRCUIT RANGE/PERFORMANCE PROBLEM —, Diagnostic Procedure with Diagnostic Trouble Code (DTC).>
P1141	Mass air flow sensor circuit range/perfomance problem (low input)	<Ref. to EN(DOHC TURBO)-308, DTC P1141 — MASS AIR FLOW SENSOR CIRCUIT RANGE/PERFORMANCE PROBLEM (LOW INPUT) —, Diagnostic Procedure with Diagnostic Trouble Code (DTC).>
P1142	Throttle position sensor circuit range/performance problem (low input)	<Ref. to EN(DOHC TURBO)-310, DTC P1142 — THROTTLE POSITION SENSOR CIRCUIT RANGE/PERFORMANCE PROBLEM (LOW INPUT) —, Diagnostic Procedure with Diagnostic Trouble Code (DTC).>
P1146	Pressure sensor circuit range/performance problem (high input)	<Ref. to EN(DOHC TURBO)-312, DTC P1146 — PRESSURE SENSOR CIRCUIT RANGE/PERFORMANCE PROBLEM (HIGH INPUT) —, Diagnostic Procedure with Diagnostic Trouble Code (DTC).>
P1230	Fuel pump control unit maifunction	<Ref. to EN(DOHC TURBO)-314, DTC P1230 — FUEL PUMP CONTROLLER MALFUNCTION —, Diagnostic Procedure with Diagnostic Trouble Code (DTC).>
P1244	Wastegate control solenoid valve malfunction (low input)	<Ref. to EN(DOHC TURBO)-318, DTC P1244 — WASTEGATE CONTROL SOLENOID VALVE RANGE/PERFORMANCE PROBLEM (LOW INPUT) —, Diagnostic Procedure with Diagnostic Trouble Code (DTC).>
P1245	Wastegate control solenoid valve malfunction (fail-safe)	<Ref. to EN(DOHC TURBO)-320, DTC P1245 — WASTEGATE CONTROL SOLENOID VALVE MALFUNCTION (FAIL-SAFE) —, Diagnostic Procedure with Diagnostic Trouble Code (DTC).>
P1301	Fire due to increased exhaust temperature	<Ref. to EN(DOHC TURBO)-322, DTC P1301 — FIRE DUE TO INCREASED EXHAUST TEMPERATURE —, Diagnostic Procedure with Diagnostic Trouble Code (DTC).>
P1312	Exhaust temperature sensor malfunction	<Ref. to EN(DOHC TURBO)-324, DTC P1312 — EXHAUST GAS TEMPERATURE CIRCUIT MALFUNCTION —, Diagnostic Procedure with Diagnostic Trouble Code (DTC).>
P1400	Fuel tank pressure control solenoid valve circuit low input	<Ref. to EN(DOHC TURBO)-326, DTC P1400 — FUEL TANK PRESSURE CONTROL SOLENOID VALVE CIRCUIT LOW INPUT —, Diagnostic Procedure with Diagnostic Trouble Code (DTC).>
P1420	Fuel tank pressure control solenoid valve circuit high input	<Ref. to EN(DOHC TURBO)-330, DTC P1420 — FUEL TANK PRESSURE CONTROL SOLENOID VALVE CIRCUIT HIGH INPUT —, Diagnostic Procedure with Diagnostic Trouble Code (DTC).>
P1443	Evaporative emission control system vent control function problem	<Ref. to EN(DOHC TURBO)-332, DTC P1443 — EVAPORATIVE EMISSION CONTROL SYSTEM VENT CONTROL FUNCTION PROBLEM —, Diagnostic Procedure with Diagnostic Trouble Code (DTC).>
P1480	Cooling fan relay 1 circuit high input	<Ref. to EN(DOHC TURBO)-335, DTC P1480 — COOLING FAN RELAY 1 CIRCUIT HIGH INPUT —, Diagnostic Procedure with Diagnostic Trouble Code (DTC).>

GETtheMANUALS.org

LIST OF DIAGNOSTIC TROUBLE CODE (DTC)

DTC No.	Item	Index
P1507	Idle control system malfunction (fail-safe)	<Ref. to EN(DOHC TURBO)-338, DTC P1507 — IDLE CONTROL SYSTEM MALFUNCTION (FAIL-SAFE) —, Diagnostic Procedure with Diagnostic Trouble Code (DTC).>
P1518	Starter switch circuit low input	<Ref. to EN(DOHC TURBO)-341, DTC P1518 — STARTER SWITCH CIRCUIT LOW INPUT —, Diagnostic Procedure with Diagnostic Trouble Code (DTC).>
P1544	High exhaust temperature detected	<Ref. to EN(DOHC TURBO)-344, DTC P1544 — HIGH EXHAUST TEMPERATURE DETECTED —, Diagnostic Procedure with Diagnostic Trouble Code (DTC).>
P1560	Back-up voltage circuit malfunction	<Ref. to EN(DOHC TURBO)-347, DTC P1560 — Back-up Voltage Circuit Malfunction —.>
P1590	Neutral position switch circuit high input	<Ref. to EN(DOHC TURBO)-350, DTC P1590 — NEUTRAL POSITION SWITCH CIRCUIT HIGH INPUT —, Diagnostic Procedure with Diagnostic Trouble Code (DTC).>
P1591	Neutral position switch circuit low input	<Ref. to EN(DOHC TURBO)-354, DTC P1591 — NEUTRAL POSITION SWITCH CIRCUIT LOW INPUT —, Diagnostic Procedure with Diagnostic Trouble Code (DTC).>
P1594	Automatic transmission diagnosis input signal circuit malfunction	<Ref. to EN(DOHC TURBO)-356, DTC P1594 — AUTOMATIC TRANSMISSION DIAGNOSIS INPUT SIGNAL CIRCUIT MALFUNCTION —, Diagnostic Procedure with Diagnostic Trouble Code (DTC).>
P1595	Automatic transmission diagnosis input signal circuit low input	<Ref. to EN(DOHC TURBO)-358, DTC P1595 — AUTOMATIC TRANSMISSION DIAGNOSIS INPUT SIGNAL CIRCUIT LOW INPUT —, Diagnostic Procedure with Diagnostic Trouble Code (DTC).>
P1596	Automatic transmission diagnosis input signal circuit high input	<Ref. to EN(DOHC TURBO)-360, DTC P1596 — AUTOMATIC TRANSMISSION DIAGNOSIS INPUT SIGNAL CIRCUIT HIGH INPUT —, Diagnostic Procedure with Diagnostic Trouble Code (DTC).>
P1698	Engine torque control cut signal circuit low input	<Ref. to EN(DOHC TURBO)-362, DTC P1698 — ENGINE TORQUE CONTROL CUT SIGNAL CIRCUIT LOW INPUT —, Diagnostic Procedure with Diagnostic Trouble Code (DTC).>
P1699	Engine torque control cut signal circuit high input	<Ref. to EN(DOHC TURBO)-364, DTC P1699 — ENGINE TORQUE CONTROL CUT SIGNAL CIRCUIT HIGH INPUT —, Diagnostic Procedure with Diagnostic Trouble Code (DTC).>
P1700	Throttle position sensor circuit malfunction for automatic transmission	<Ref. to AT-52, DTC 31 THROTTLE POSITION SENSOR, Diagnostic Procedure with Diagnostic Trouble Code (DTC).>
P1701	Cruise control set signal circuit malfunction for automatic transmission	<Ref. to EN(DOHC TURBO)-366, DTC P1701 — CRUISE CONTROL SET SIGNAL CIRCUIT MALFUNCTION FOR AUTOMATIC TRANSMISSION —, Diagnostic Procedure with Diagnostic Trouble Code (DTC).>
P1703	Low clutch timing control solenoid valve circuit malfunction	<Ref. to AT-78, DTC 73 LOW CLUTCH TIMING SOLENOID, Diagnostic Procedure with Diagnostic Trouble Code (DTC).>
P1711	Engine torque control signal 1 circuit malfunction	<Ref. to EN(DOHC TURBO)-368, DTC P1711 — ENGINE TORQUE CONTROL SIGNAL 1 CIRCUIT MALFUNCTION —, Diagnostic Procedure with Diagnostic Trouble Code (DTC).>
P1712	Engine torque control signal 2 circuit malfunction	<Ref. to EN(DOHC TURBO)-370, DTC P1712 — ENGINE TORQUE CONTROL SIGNAL 2 CIRCUIT MALFUNCTION —, Diagnostic Procedure with Diagnostic Trouble Code (DTC).>

GETtheMANUALS.org

GETtheMANUALS.org

18. Diagnostic Procedure with Diagnostic Trouble Code (DTC)

A: DTC P0031 — FRONT OXYGEN (A/F) SENSOR HEATER CIRCUIT LOW INPUT —

- **DTC DETECTING CONDITION:**
  - Immediately at fault recognition

CAUTION:
After repair or replacement of faulty parts, conduct Clear Memory Mode <Ref. to EN(DOHC TURBO)-49, OPERATION, Clear Memory Mode.> and Inspection Mode <Ref. to EN(DOHC TURBO)-46, Inspection Mode.>.

- **WIRING DIAGRAM:**

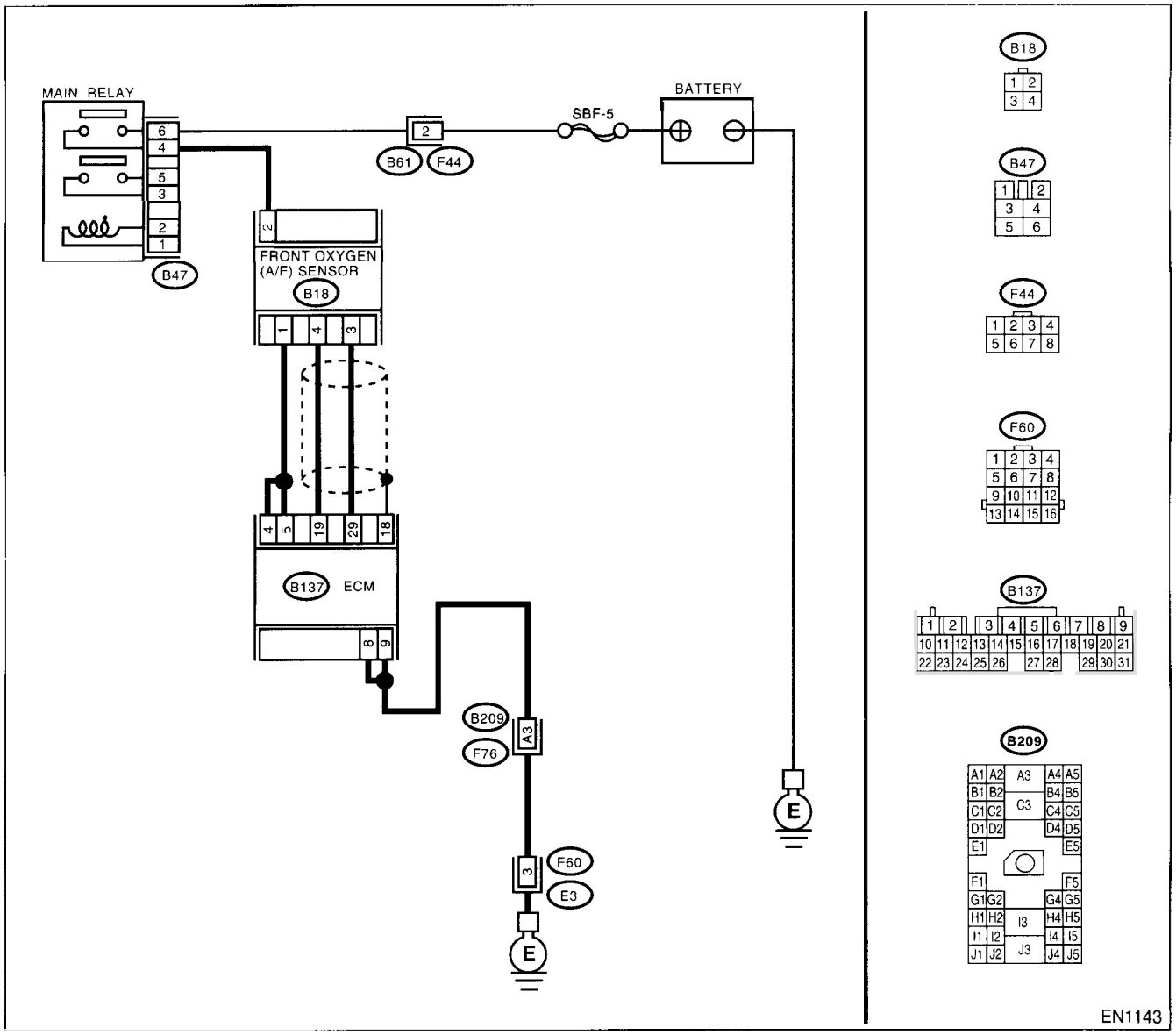

GETtheMANUALS.org

	Step	Check	Yes	No
1	**CHECK ANY OTHER DTC ON DISPLAY.**	Does the Subaru Select Monitor or OBD-II general scan tool indicate DTC P0031 and P0037 at the same time?	Go to step **2.**	Go to step **5.**
2	**CHECK POWER SUPPLY TO FRONT OXYGEN (A/F) SENSOR.** 1)Turn the ignition switch to OFF. 2)Disconnect the connector from front oxygen (A/F) sensor. 3)Turn the ignition switch to ON. 4)Measure the voltage between front oxygen (A/F) sensor connector and engine ground. ***Connector & terminal*** ***(B18) No. 2 (+) — Engine ground (–):***	Is the voltage more than 10 V?	Go to step **3.**	Repair power supply line. NOTE: In this case, repair the following: • Open circuit in harness between main relay and front oxygen (A/F) sensor connector • Poor contact in front oxygen (A/F) sensor connector • Poor contact in main relay connector
3	**CHECK GROUND CIRCUIT OF ECM.** Measure the resistance of harness between ECM connector and chassis ground. ***Connector & terminal*** ***(B137) No. 8 — Chassis ground:*** ***(B137) No. 9 — Chassis ground:***	Is the resistance less than 5 Ω?	Go to step **4.**	Repair harness and connector. NOTE: In this case, repair the following: • Open circuit in harness between ECM and engine ground terminal • Poor contact in ECM connector Poor contact in coupling connector
4	**CHECK CURRENT DATA.** 1)Start the engine. 2)Read the data of front oxygen (A/F) sensor heater current using Subaru Select Monitor or OBD-II general scan tool. NOTE: •Subaru Select Monitor For detailed operation procedure, refer to the "READ CURRENT DATA FOR ENGINE". <Ref. to EN(DOHC TURBO)-38, Subaru Select Monitor.> •OBD-II scan tool For detailed operation procedures, refer to the OBD-II General Scan Tool Instruction Manual.	Is the value more than 0.2 A?	Repair poor contact in connector. NOTE: In this case, repair the following: • Poor contact in front oxygen (A/F) sensor connector • Poor contact in ECM connector	Go to step **5.**
5	**CHECK OUTPUT SIGNAL FROM ECM.** 1)Start and idle the engine. 2)Measure the voltage between ECM connector and chassis ground. ***Connector & terminal*** ***(B137) No. 4 (+) — Chassis ground (–):*** ***(B137) No. 5 (+) — Chassis ground (–):***	Is the voltage less than 1.0 V?	Go to step **7.**	Go to step **6.**
6	**CHECK OUTPUT SIGNAL FROM ECM.** Measure the voltage between ECM connector and chassis ground. ***Connector & terminal*** ***(B137) No. 4 (+) — Chassis ground (–):*** ***(B137) No. 5 (+) — Chassis ground (–):***	Does the voltage change less than 1.0 V by shaking harness and connector of ECM while monitoring the value with voltage meter?	Repair poor contact in ECM connector.	Go to step **7.**

GETtheMANUALS.org

	Step	Check	Yes	No
7	**CHECK FRONT OXYGEN (A/F) SENSOR.** 1)Turn the ignition switch to OFF. 2)Measure the resistance between front oxygen (A/F) sensor connector terminals. ***Terminals*** ***No. 2 — No. 1:***	Is the resistance less than 10 Ω?	Repair harness and connector. NOTE: In this case, repair the following: • Open or ground short circuit in harness between front oxygen (A/F) sensor and ECM connector • Poor contact in front oxygen (A/F) sensor connector • Poor contact in ECM connector	Replace the front oxygen (A/F) sensor. <Ref. to FU(DOHC TURBO)-42, Front Oxygen (A/F) Sensor.>

GETtheMANUALS.org

GETtheMANUALS.org

B: DTC P0032 — FRONT OXYGEN (A/F) SENSOR HEATER CIRCUIT HIGH INPUT —

- **DTC DETECTING CONDITION:**
  - Immediately at fault recognition

CAUTION:
After repair or replacement of faulty parts, conduct Clear Memory Mode <Ref. to EN(DOHC TURBO)-49, OPERATION, Clear Memory Mode.> and Inspection Mode <Ref. to EN(DOHC TURBO)-46, Inspection Mode.>.

- **WIRING DIAGRAM:**

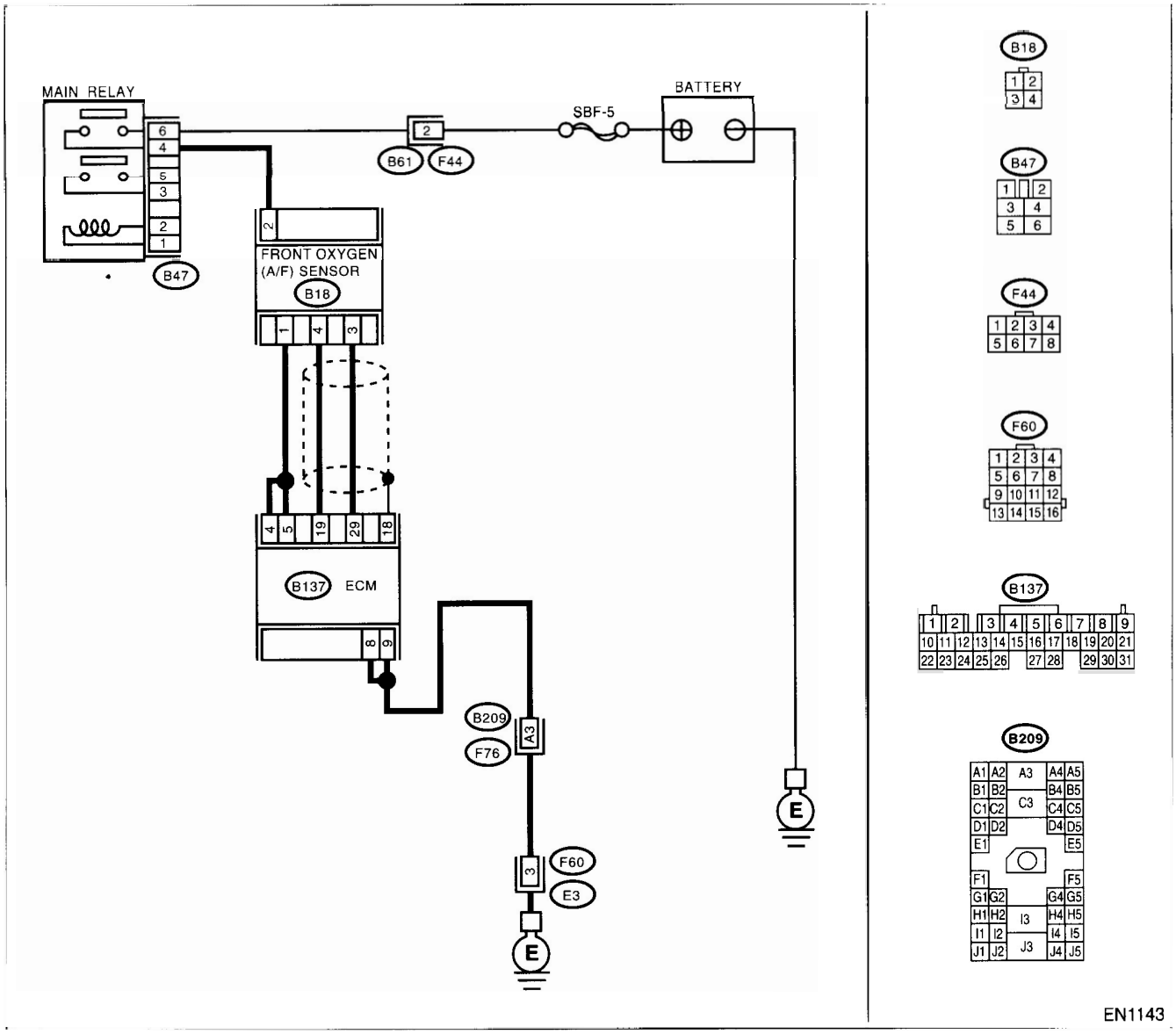

GETtheMANUALS.org

	Step	Check	Yes	No
1	**CHECK OUTPUT SIGNAL FROM ECM.** 1)Turn the ignition switch to ON. 2)Measure the voltage between ECM connector and chassis ground. ***Connector & terminal*** ***(B137) No. 4 (+) — Chassis ground (–):*** ***(B137) No. 5 (+) — Chassis ground (–):***	Is the voltage more than 8 V?	Go to step **3.**	Go to step **2.**
2	**CHECK FRONT OXYGEN (A/F) SENSOR HEATER CURRENT.** 1)Turn the ignition switch to OFF. 2)Repair the battery short circuit in harness between ECM and front oxygen (A/F) sensor connector. 3)Turn the ignition switch to ON. 4)Read the data of front oxygen (A/F) sensor heater current using Subaru Select Monitor or the OBD-II general scan tool. NOTE: •Subaru Select Monitor For detailed operation procedure, refer to the "READ CURRENT DATA FOR ENGINE". <Ref. to EN(DOHC TURBO)-38, Subaru Select Monitor.> •OBD-II general scan tool For detailed operation procedure, refer to the OBD-II General Scan Tool Instruction Manual.	Is the value more than 2.3 A?	Replace the ECM. <Ref. to FU(DOHC TURBO)-47, Engine Control Module.>	END
3	**CHECK OUTPUT SIGNAL FROM ECM.** Measure the voltage between ECM connector and chassis ground. ***Connector & terminal*** ***(B137) No. 4 (+) — Chassis ground (–):*** ***(B137) No. 5 (+) — Chassis ground (–):***	Does the voltage change more than 8 V by shaking harness and connector of ECM while monitoring the value with voltage meter?	Repair battery short circuit in harness between ECM and front oxygen (A/F) sensor connector.	END

GETtheMANUALS.org

C: DTC P0037 — REAR OXYGEN SENSOR HEATER CIRCUIT MALFUNCTION

- **DTC DETECTING CONDITION:**
  - Two consecutive driving cycles with fault

CAUTION:
After repair or replacement of faulty parts, conduct Clear Memory Mode <Ref. to EN(DOHC TURBO)-49, OPERATION, Clear Memory Mode.> and Inspection Mode <Ref. to EN(DOHC TURBO)-46, Inspection Mode.>.

- **WIRING DIAGRAM:**

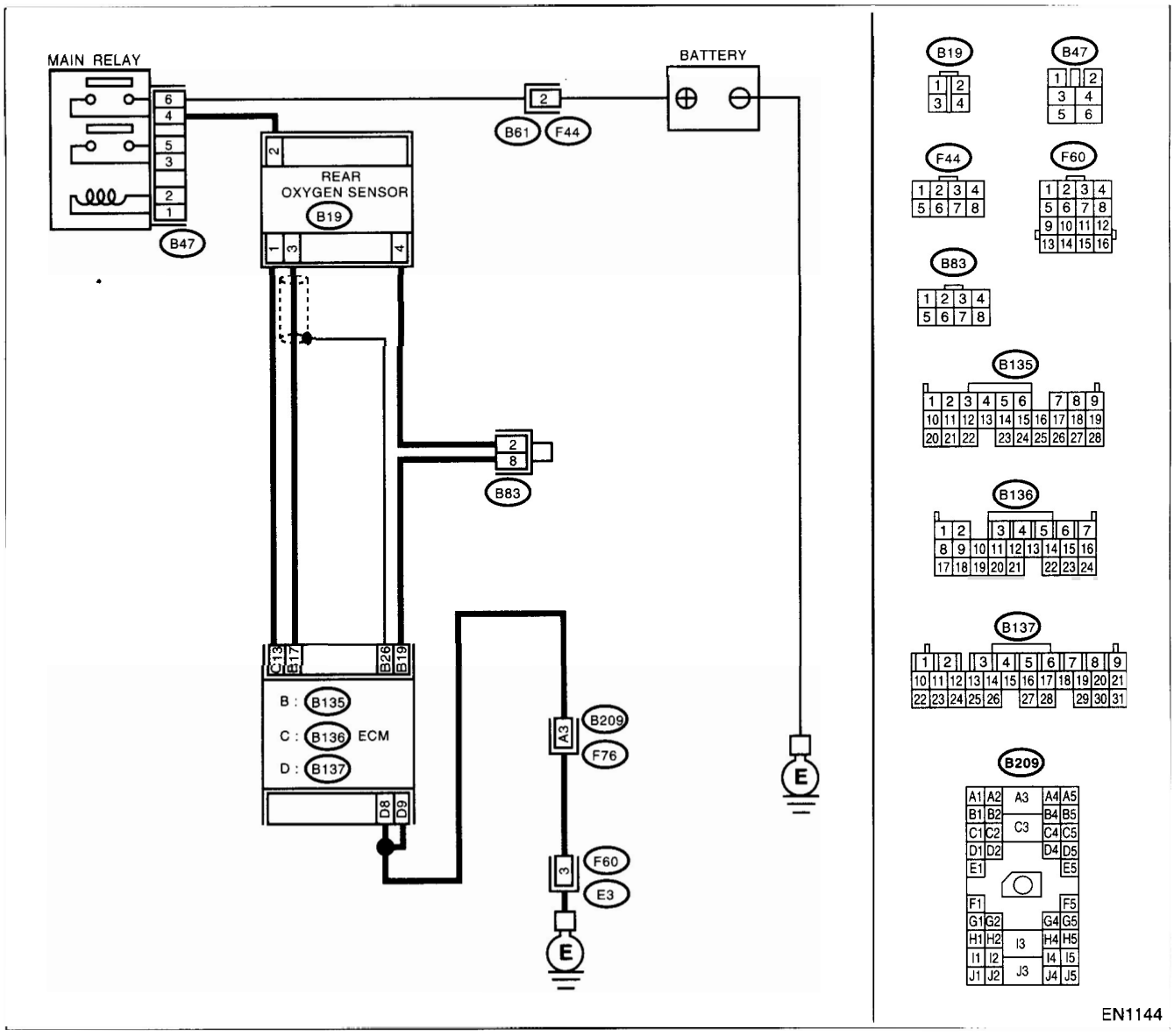

GETtheMANUALS.org

	Step	Check	Yes	No
1	**CHECK GROUND CIRCUIT OF ECM.** 1)Turn the ignition switch to OFF. 2)Disconnect the connector from ECM. 3)Measure the resistance of harness between ECM connector and chassis ground. ***Connector & terminal*** ***(B137) No. 8 — Chassis ground:*** ***(B137) No. 9 — Chassis ground:***	Is the resistance less than 5 Ω?	Go to step **2.**	Repair harness and connector. NOTE: In this case, repair the following: • Open circuit in harness between ECM and engine ground terminal • Poor contact in ECM connector • Poor contact in coupling connector
2	**CHECK CURRENT DATA.** 1)Start the engine. 2)Read the data of rear oxygen sensor heater current using Subaru Select Monitor or OBD-II general scan tool. NOTE: •Subaru Select Monitor For detailed operation procedure, refer to the "READ CURRENT DATA FOR ENGINE". <Ref. to EN(DOHC TURBO)-38, Subaru Select Monitor.> •OBD-II scan tool For detailed operation procedures, refer to the OBD-II General Scan Tool Instruction Manual.	Is the value more than 0.2 A?	Repair the connector. NOTE: In this case, repair the following: • Poor contact in rear oxygen sensor connector • Poor contact in rear oxygen sensor connecting harness connector • Poor contact in ECM connector	Go to step **3.**
3	**CHECK OUTPUT SIGNAL FROM ECM.** 1)Start and idle the engine. 2)Measure the voltage between ECM connector and chassis ground. ***Connector & terminal*** ***(B136) No. 13 (+) — Chassis ground (–):***	Is the voltage less than 1.0 V?	Go to step **6.**	Go to step **4.**
4	**CHECK OUTPUT SIGNAL FROM ECM.** Measure the voltage between ECM connector and chassis ground. ***Connector & terminal*** ***(B136) No. 13 (+) — Chassis ground (–):***	Does the voltage change less than 1.0 V by shaking harness and connector of ECM while monitoring the value with voltage meter?	Repair poor contact in ECM connector.	Go to step **5.**
5	**CHECK OUTPUT SIGNAL FROM ECM.** 1)Disconnect the connector from rear oxygen sensor. 2)Measure the voltage between ECM connector and chassis ground. ***Connector & terminal*** ***(B136) No. 13 (+) — Chassis ground (–):***	Is the voltage less than 1.0 V?	Replace the ECM. <Ref. to FU(DOHC TURBO)-47, Engine Control Module.>	Repair battery short circuit in harness between ECM and rear oxygen sensor connector. After repair, replace the ECM. <Ref. to FU(DOHC TURBO)-47, Engine Control Module.>

GETtheMANUALS.org

	Step	Check	Yes	No
6	**CHECK POWER SUPPLY TO REAR OXYGEN SENSOR.** 1)Turn the ignition switch to OFF. 2)Disconnect the connector from rear oxygen sensor. 3)Turn the ignition switch to ON. 4)Measure the voltage between rear oxygen sensor connector and engine ground or chassis ground. ***Connector & terminal*** ***(B19) No. 2 (+) — Chassis ground (–):***	Is the voltage more than 10 V?	Go to step **7.**	Repair power supply line. NOTE: In this case, repair the following: • Open circuit in harness between main relay and rear oxygen sensor connector • Poor contact in rear oxygen sensor connector • Poor contact in coupling connector
7	**CHECK REAR OXYGEN SENSOR.** 1)Turn the ignition switch to OFF. 2)Measure the resistance between rear oxygen sensor connector terminals. ***Terminals*** ***No. 1 — No. 2:***	Is the resistance less than 30 Ω?	Repair harness and connector. NOTE: In this case, repair the following: • Open circuit in harness between rear oxygen sensor and ECM connector • Poor contact in rear oxygen sensor connector • Poor contact in ECM connector • Poor contact in coupling connector	Replace the rear oxygen sensor. <Ref. to FU(DOHC TURBO)-44, Rear Oxygen Sensor.>

GETmeMANUALS.org

GETtheMANUALS.org

D: DTC P0038 — REAR OXYGEN SENSOR HEATER CIRCUIT HIGH INPUT —

- **DTC DETECTING CONDITION:**
  - Two consecutive driving cycles with fault

CAUTION:
After repair or replacement of faulty parts, conduct Clear Memory Mode <Ref. to EN(DOHC TURBO)-49, OPERATION, Clear Memory Mode.> and Inspection Mode <Ref. to EN(DOHC TURBO)-46, Inspection Mode.>.

- **WIRING DIAGRAM:**

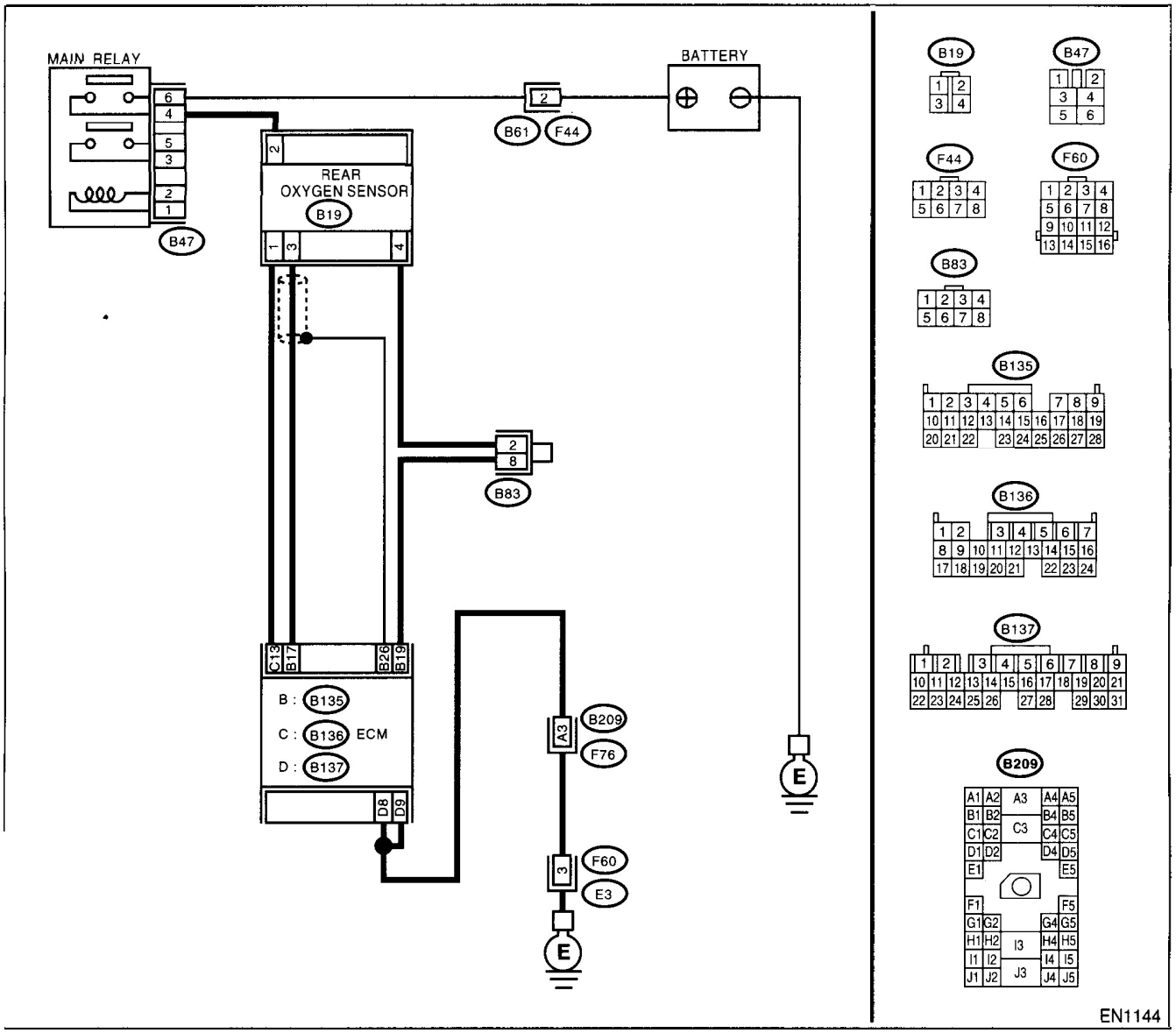

Step		Check	Yes	No
1	**CHECK INPUT SIGNAL FOR ECM.** Measure the voltage between ECM connector and chassis ground. ***Connector & terminal*** ***(B136) No. 13 (+) — Chassis ground (–):***	Is the voltage more than 8 V?	Go to step **2.**	Go to step **3.**

GETtheMANUALS.org

	Step	Check	Yes	No
2	**CHECK CURRENT DATA.** 1)Turn the ignition switch to OFF. 2)Repair the battery short circuit in harness between ECM and rear oxygen sensor connector. 3)Turn the ignition switch to ON. 4)Read the data of rear oxygen sensor heater current using Subaru Select Monitor or the OBD-II general scan tool. NOTE: •Subaru Select Monitor For detailed operation procedure, refer to the "READ CURRENT DATA FOR ENGINE". <Ref. to EN(DOHC TURBO)-38, Subaru Select Monitor.> •OBD-II general scan tool For detailed operation procedure, refer to the OBD-II General Scan Tool Instruction Manual.	Is the value more than 7 A?	Replace the ECM. <Ref. to FU(DOHC TURBO)-47, Engine Control Module.>	END
3	**CHECK POOR CONTACT.** Check poor contact in ECM connector.	Is there poor contact in ECM connector?	Repair poor contact in ECM connector.	END

GETtheMANUALS.org

E: DTC P0101 — MASS AIR FLOW SENSOR CIRCUIT RANGE/PERFORMANCE PROBLEM (HIGH INPUT) —

- **DTC DETECTING CONDITION:**
  - Two consecutive driving cycles with fault
- **TROUBLE SYMPTOM:**
  - Erroneous idling
  - Engine stalls.
  - Poor driving performance

CAUTION:
After repair or replacement of faulty parts, conduct Clear Memory Mode <Ref. to EN(DOHC TURBO)-49, OPERATION, Clear Memory Mode.> and Inspection Mode <Ref. to EN(DOHC TURBO)-46, Inspection Mode.>.

- **WIRING DIAGRAM:**

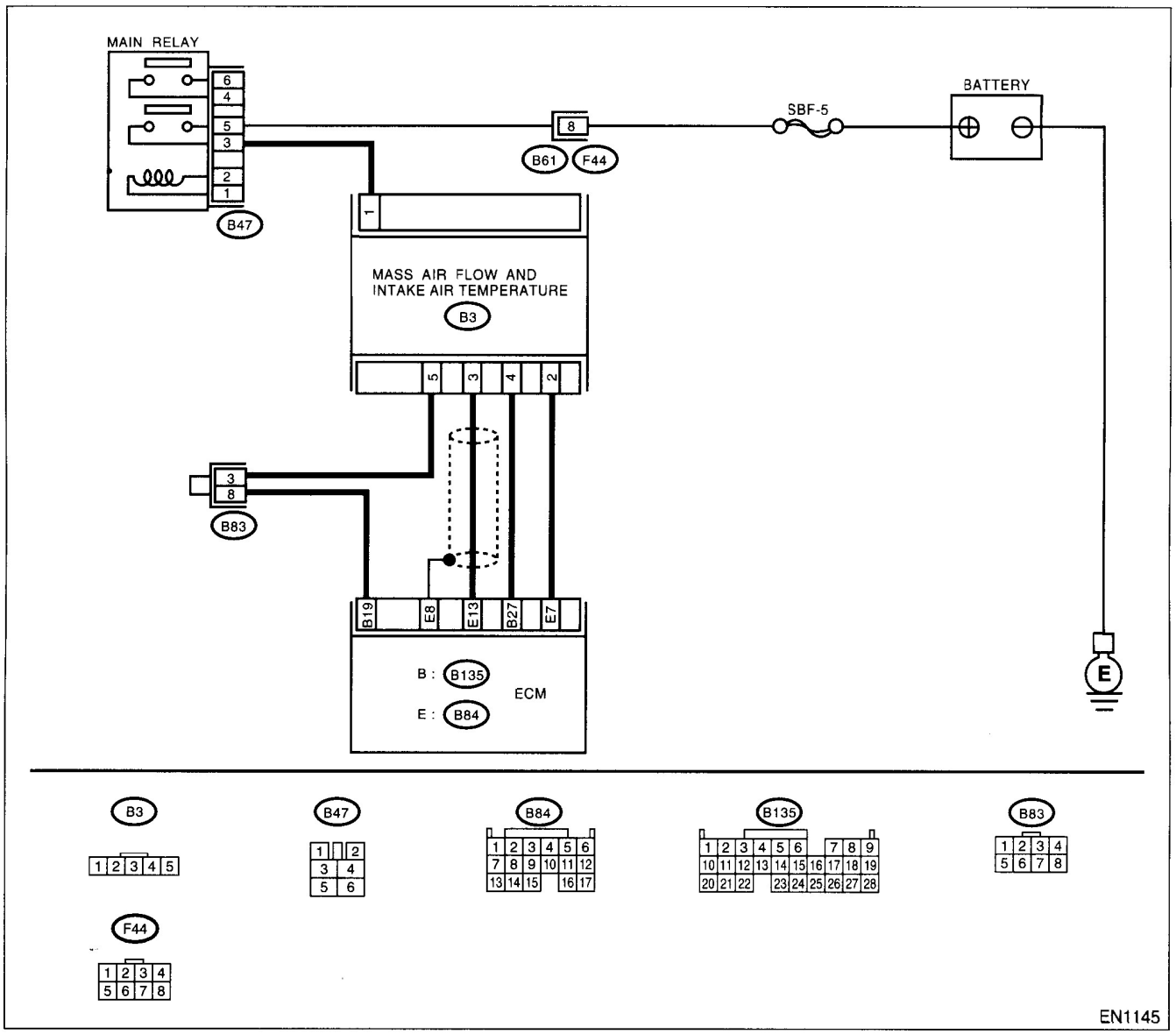

GETtheMANUALS.org

Step		Check	Yes	No
1	**CHECK ANY OTHER DTC ON DISPLAY.**	Does the Subaru Select Monitor or OBD-II general scan tool indicate DTC P0102 or P0103?	Inspect DTC P0102 or P0103 using "Diagnostics Chart with Trouble Code". NOTE: In this case, it is not necessary to inspect DTC P0101.	Replace the mass air flow and intake air temprature sensor. <Ref. to FU(DOHC TURBO)-34, Mass Air Flow and Intake Air Temperature Sensor.>

GETtheMANUALS.org

F: DTC P0102 — MASS AIR FLOW SENSOR CIRCUIT LOW INPUT —

- **DTC DETECTING CONDITION:**
  - Immediately at fault recognition
- **TROUBLE SYMPTOM:**
  - Erroneous idling
  - Engine stalls.
  - Poor driving performanc
- **WIRING DIAGRAM:**

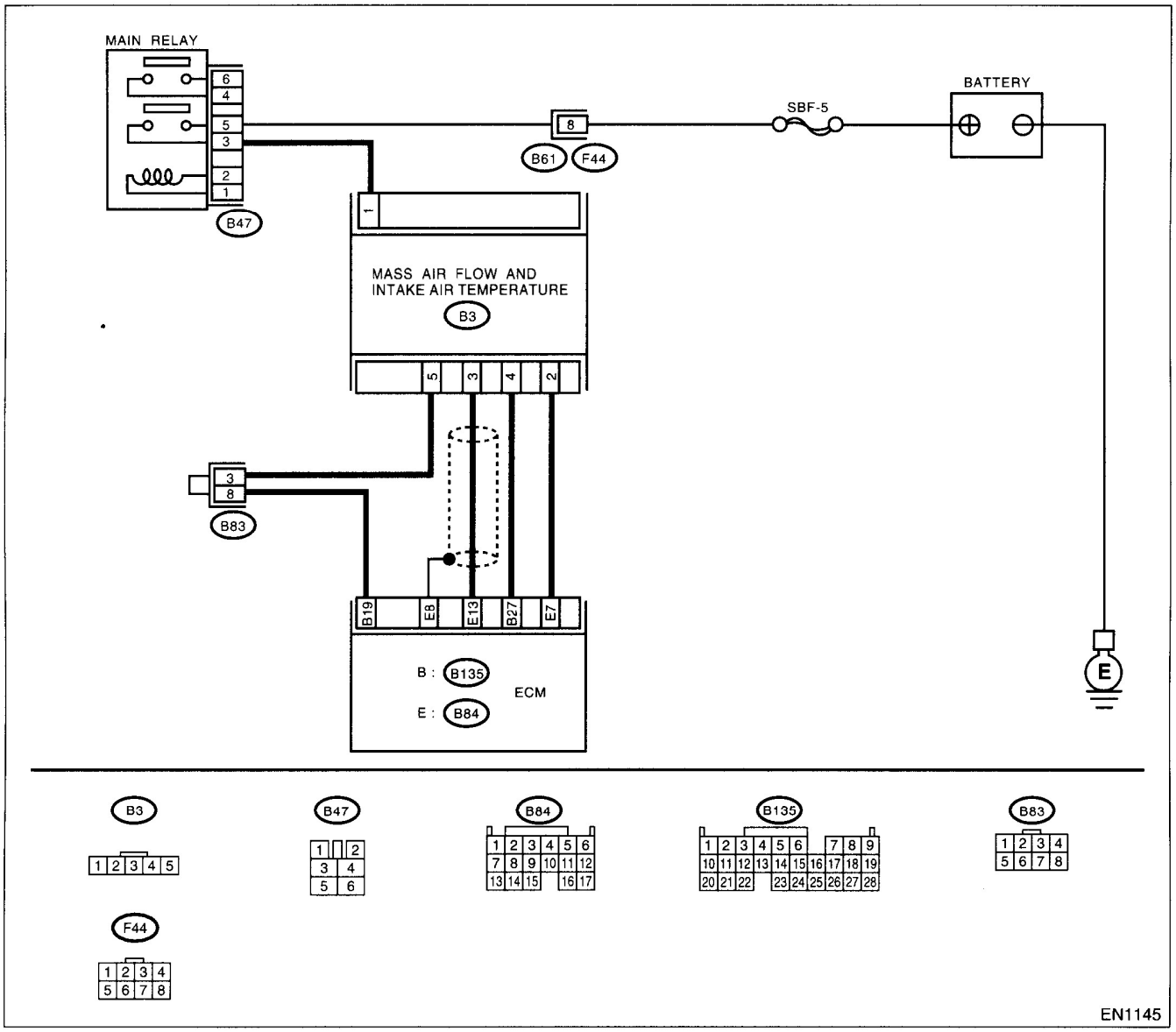

GETtheMANUALS.org

Step	Check	Yes	No
CONNECT SUBARU SELECT MONITOR OR THE OBD-II GENERAL SCAN TOOL, AND READ DATA. 1)Turn the ignition switch to OFF. 2)Connect the Subaru Select Monitor or the OBD-II general scan tool to data link connector. 3)Turn the ignition switch to ON and Subaru Select Monitor or the OBD-II general scan tool switch to ON. 4)Start the engine. 5)Read the data of mass air flow sensor signal using Subaru Select Monitor or OBD-II general scan tool. NOTE: •Subaru Select Monitor For detailed operation procedure, refer to the "READ CURRENT DATA FOR ENGINE". <Ref. to EN(DOHC TURBO)-38, Subaru Select Monitor.> •OBD-II general scan tool For detailed operation procedures, refer to the OBD-II General Scan Tool Instruction Manual.	s the value equal to or more han 1.3 g/sec (0.172 lb/min) or .3 V and equal to or less than 40 g/sec (32 lb/min) or 4.58 /?	Even if MIL lights up, the circuit has returned to a normal condition at this time. A temporary poor contact of the connector or harness may be the cause. Repair harness or connector in the mass air flow sensor. NOTE: In this case, repair the following: • Open or ground short circuit in harness between mass air flow sensor and ECM connector • Poor contact in mass air flow sensor or ECM connector	Go to step **2.**
CHECK INPUT SIGNAL FOR ECM. Measure the voltage between ECM connector and chassis ground while engine is idling. ***Connector & terminal*** ***(B84) No. 13 (+) — Chassis ground (–):***	s the voltage less than 0.2 V?	Go to step **4.**	Go to step **3.**
CHECK INPUT SIGNAL FOR ECM (USING SUBARU SELECT MONITOR). Measure the voltage between ECM connector and chassis ground while engine is idling.	Does the voltage change more han 0.2 V by shaking harness nd connector of ECM while nonitoring the value with Subaru select monitor?	Repair poor contact in ECM connector.	Contact with SOA distributor) service. NOTE: nspection by DTM s required, because probable cause is deteriora ion of multiple parts.
CHECK POWER SUPPLY TO MASS AIR FLOW SENSOR. 1)Turn the ignition switch to OFF. 2)Disconnect the connector from mass air flow sensor. 3)Turn the ignition switch to ON. 4)Measure voltage between mass air flow sensor connector and chassis ground. ***Connector & terminal*** ***(B3) No. 1 (+) — Chassis ground (–):***	s the voltage more than 10V?	Go to step **5.**	Repair open circuit between mass air flow sensor and main relay
CHECK HARNESS BETWEEN ECM AND MASS AIR FLOW SENSOR CONNECTOR. 1)Turn the ignition switch to OFF. 2)Disconnect the connector from ECM. 3)Measure the resistance of harness between ECM and mass air flow sensor connector. ***Connector & terminal*** ***(B84) No. 13 — (B3) No. 3:*** ***(B135) No. 27 — (B3) No. 4:*** ***(B135) No. 19 — (B3) No. 5:***	s the resistance less than 1Ω?	Go to step **6.**	Repair open circuit between ECM and mass air flow sensor connector.

GETtheMANUALS.org

	Step	Check	Yes	No
6	**CHECK HARNESS BETWEEN ECM AND MASS AIR FLOW SENSOR CONNECTOR** Measure the resistance of harness between ECM and chassis ground. ***Connector & terminal*** ***(B84) No. 13 — Chassis ground:*** ***(B135) No. 27 — Chassis ground:*** ***(B135) No. 19 — Chassis ground:***	Is the resistance more than 1MΩ?	Go to step **7.**	Repair ground short circuit between ECM and mass air flow sensor connector.
7	**CHECK POOR CONTACT** Check poor contact in mass air flow sensor connector.	Is there poor contact in mass air flow sensor connector?	Repair poor contact in mass air flow sensor connector.	Replace the mass air flow and intake air temperature sensor. <Ref. to FU(DOHC TURBO)-34, Mass Air Flow and Intake Air Temperature Sensor.>

GETtheMANUALS.org

GETtheMANUALS.org

G: DTC P0103 — MASS AIR FLOW SENSOR CIRCUIT HIGH INPUT —

- **DTC DETECTING CONDITION:**
  - Immediately at fault recognition
- **TROUBLE SYMPTOM:**
  - Erroneous idling
  - Engine stalls.
  - Poor driving performance

CAUTION:
After repair or replacement of faulty parts, conduct Clear Memory Mode <Ref. to EN(DOHC TURBO)-49, OPERATION, Clear Memory Mode.> and Inspection Mode <Ref. to EN(DOHC TURBO)-46, Inspection Mode.>.

- **WIRING DIAGRAM:**

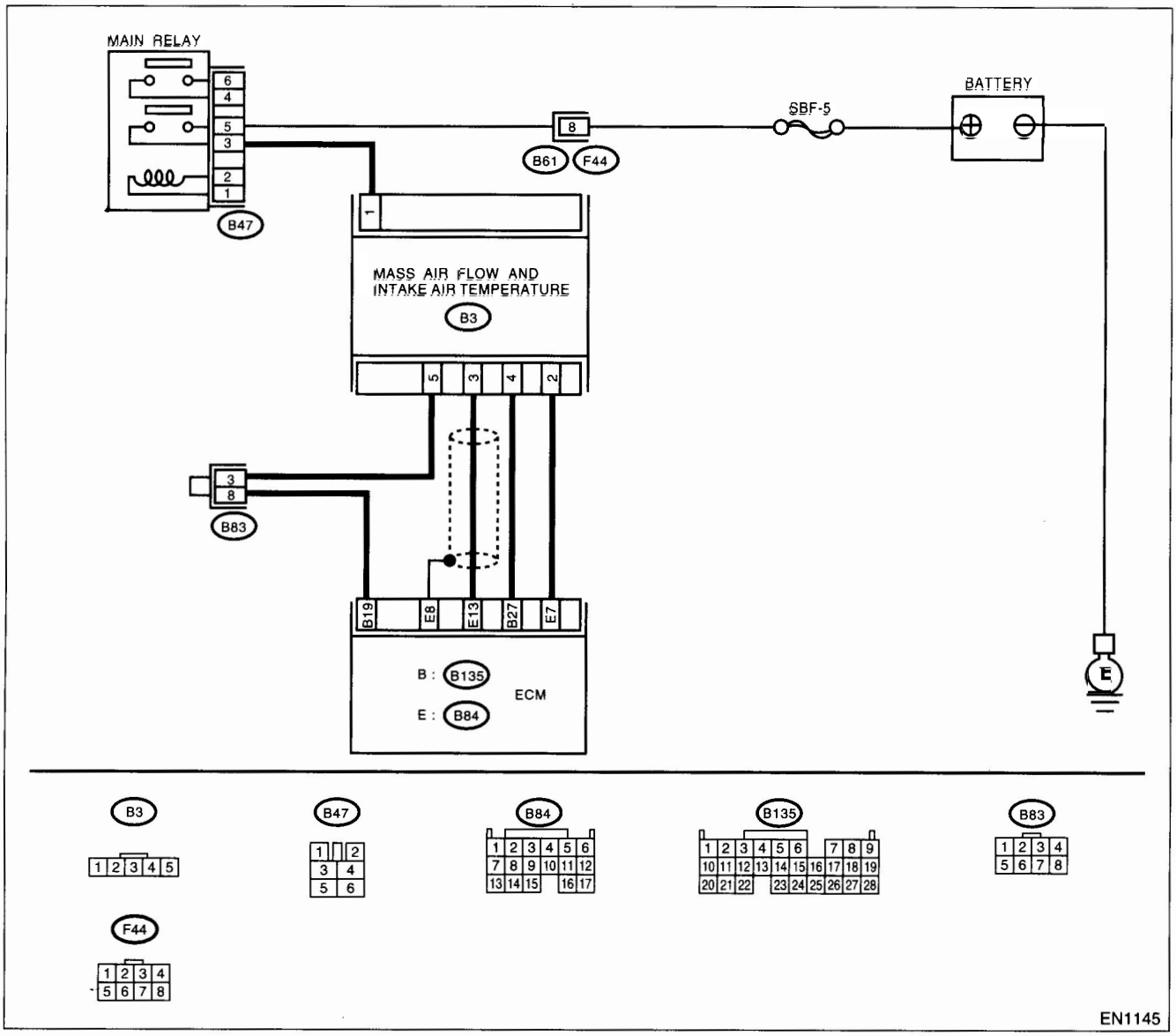

GETtheMANUALS.org

	Step	Check	Yes	No
1	**CONNECT SUBARU SELECT MONITOR OR THE OBD-II GENERAL SCAN TOOL, AND READ DATA.** 1)Turn the ignition switch to OFF. 2)Connect the Subaru Select Monitor or the OBD-II general scan tool to data link connector. 3)Turn the ignition switch to ON and Subaru Select Monitor or the OBD-II general scan tool switch to ON. 4)Start the engine. 5) Read the data of mass air flow sensor signal using Subaru Select Monitor or OBD-II general scan tool. NOTE: •Subaru Select Monitor For detailed operation procedure, refer to the "READ CURRENT DATA FOR ENGINE". <Ref. to EN(DOHC TURBO)-38, Subaru Select Monitor.> •OBD-II general scan tool For detailed operation procedures, refer to the OBD-II General Scan Tool Instruction Manual.	Is the value equal to or more than 1.3 g/sec (0.172 lb/min) or 0.3 V and equal to or less than 240 g/sec (32 lb/min) or 4.58 V?	Even if MIL lights up, the circuit has returned to a normal condition at this time.	Go to step **2.**
2	**CHECK HARNESS BETWEEN ECM AND MASS AIR FLOW SENSOR CONNECTOR.** 1)Turn the ignition switch to OFF and Subaru Select Monitor or the OBD-II general scan tool switch to OFF. 2)Disconnect the connector from mass air flow sensor. 3)Turn the ignition switch to ON and Subaru Select Monitor or the OBD-II general scan tool switch to ON. 4)Read the data of mass air flow sensor signal using Subaru select monitor or OBD-II general scan tool. NOTE: •Subaru Select Monitor For detailed operation procedure, refer to the "READ CURRENT DATA FOR ENGINE". <Ref. to EN(DOHC TURBO)-38, Subaru Select Monitor.> •OBD-II general scan tool For detailed operation procedures, refer to the OBD-II General Scan Tool Instruction Manual.	Is the value more than 240 g/sec (32 lb/min) or 4.58 V in function mode F06?	Repair battery short circuit in harness between mass air flow sensor and ECM connector. After repair, replace the ECM.	Replace the mass air flow sensor.

GETtheMANUALS.org

H: DTC P0106 — PRESSURE SENSOR CIRCUIT RANGE/PERFORMANCE PROBLEM (LOW INPUT) —

- **DTC DETECTING CONDITION:**
  - Two consecutive driving cycles with fault
- **TROUBLE SYMPTOM:**
  - Failure of engine to start

CAUTION:
After repair or replacement of faulty parts, conduct Clear Memory Mode <Ref. to EN(DOHC TURBO)-49, OPERATION, Clear Memory Mode.> and Inspection Mode <Ref. to EN(DOHC TURBO)-46, Inspection Mode.>.

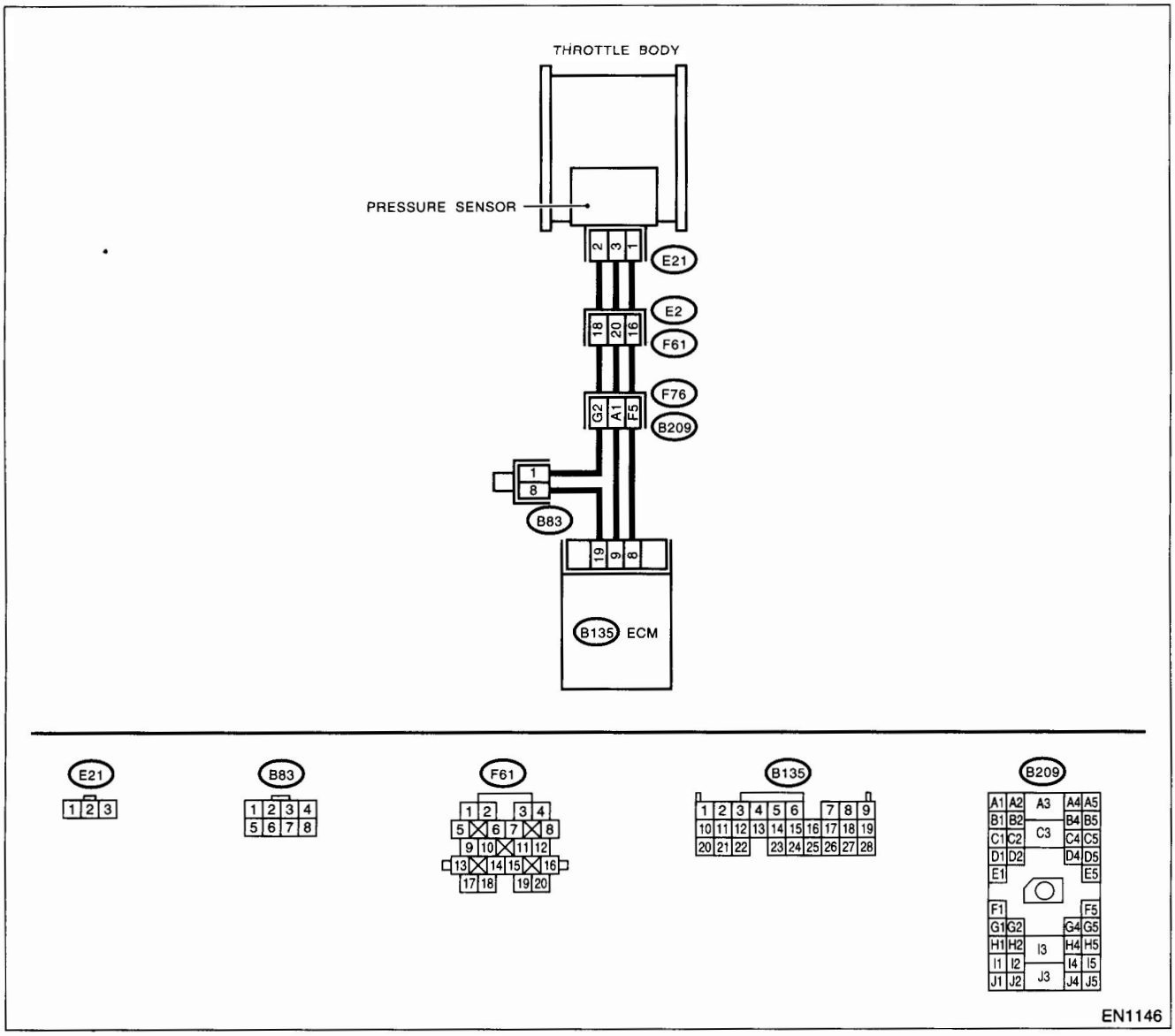

GETtheMANUALS.org

	Step	Check	Yes	No
	CHECK IDLE SWITCH SIGNAL. 1)Turn the ignition switch to ON. 2)Operate the LED operation mode for engine using Subaru Select Monitor. NOTE: •Subaru Select Monitor For detailed operation procedure, refer to the "LED OPERATION MODE FOR ENGINE". <Ref. to EN(DOHC TURBO)-38, Subaru Select Monitor.>	Does the LED of {Idle Switch Signal} come on?	Go to step **2.**	Check the throttle position sensor circuit. <Ref. to EN(DOHC TURBO)-132, DTC P0121 — THROTTLE POSITION SENSOR CIRCUIT RANGE/PERFORMANCE PROBLEM (HIGH INPUT) —, Diagnostic Procedure with Diagnostic Trouble Code (DTC).> NOTE: In this case, it is not necessary to inspect DTC P0106.
2	**CHECK ANY OTHER DTC ON DISPLAY.**	Does the Subaru Select Monitor or *OBD-II general scan tool* indicate DTC P0107 or P0108?	Inspect DTC P0107 or P0108 using "List of Diagnostic Trouble Code (DTC)". <Ref. to EN(DOHC TURBO)-80, List of Diagnostic Trouble Code (DTC).> NOTE: In this case, it is not necessary to inspect DTC P0106.	Go to step **3.**
3	**CHECK CONDITION OF PRESSURE SENSOR.**	Is the pressure sensor installation bolt tightened securely?	Go to step **4.**	Tighten pressure sensor installation bolt securely.
4	**CHECK CONDITION OF THROTTLE BODY.**	Is the throttle body installation bolt tightened securely?	Replace the pressure sensor. <Ref. to FU(DOHC TURBO)-35, Pressure Sensor.>	Tighten throttle body installation bolt securely.

GETtheMANUALS.org

I: DTC P0107 — PRESSURE SENSOR CIRCUIT LOW INPUT —

- **DTC DETECTING CONDITION:**
  - Immediately at fault recognition

CAUTION:
After repair or replacement of faulty parts, conduct Clear Memory Mode <Ref. to EN(DOHC TURBO)-49, OPERATION, Clear Memory Mode.> and Inspection Mode <Ref. to EN(DOHC TURBO)-46, Inspection Mode.>.

- **WIRING DIAGRAM:**

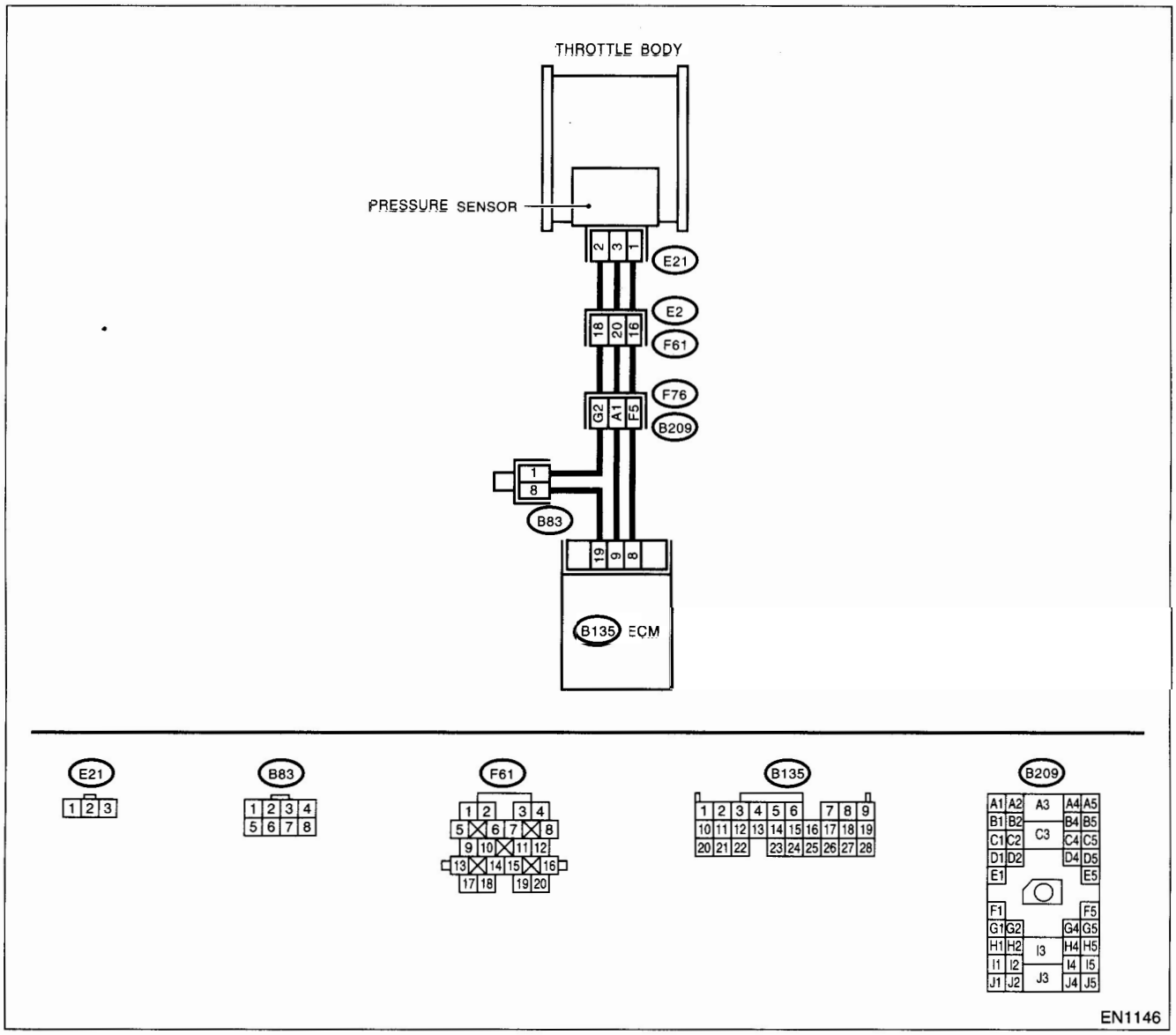

GETtheMANUALS.org

	Step	Check	Yes	No
	CHECK CURRENT DATA. 1)Start the engine. 2)Read the data of intake manifold absolute pressure signal using Subaru Select Monitor or OBD-II general scan tool. NOTE: •Subaru Select Monitor For detailed operation procedure, refer to the "READ CURRENT DATA FOR ENGINE". <Ref. to EN(DOHC TURBO)-38, Subaru Select Monitor.> •OBD-II general scan tool For detailed operation procedures, refer to the OBD-II General Scan Tool Instruction Manual.	s the value less than –7.2 kPa –54 mmHg, –2.1 inHg)?	Go to step **3.**	Go to step **2.**
	CHECK POOR CONTACT. Check poor contact in ECM and pressure sensor connector.	s there poor contact in ECM or pressure sensor connector?	Repair poor contact in ECM or pressure sensor connector.	Even if MIL lights up, the circuit has returned to a normal condition at this time.
	CHECK INPUT SIGNAL FOR ECM. Measure the voltage between ECM connector and chassis ground. ***Connector & terminal*** ***(B135) No. 9 (+) — Chassis ground (–):***	s the voltage more than 4.5 V?	Go to step **5.**	Go to step **4.**
	CHECK INPUT SIGNAL FOR ECM. Measure the voltage between ECM connector and chassis ground. ***Connector & terminal*** ***(B135) No. 9 (+) — Chassis ground (–):***	Does the voltage change more than 4.5 V by shaking harness and connector of ECM while monitoring the value with voltage meter?	Repair poor contact in ECM connector.	Contact with SOA (distributor) service. NOTE: Inspection by DTM is required, because probable cause is deterioration of multiple parts.
	CHECK INPUT SIGNAL FOR ECM. Measure the voltage between ECM and chassis ground. ***Connector & terminal*** ***(B135) No. 8 (+) — Chassis ground (–):***	s the voltage less than 0.7 V?	Go to step **6.**	Contact with SOA (distributor) service. NOTE: Inspection by DTM is required, because probable cause is deterioration of multiple parts.
	CHECK HARNESS BETWEEN ECM AND PRESSURE SENSOR CONNECTOR. 1)Turn the ignition switch to OFF. 2)Disconnect the connector from pressure sensor. 3)Turn the ignition switch to ON. 4)Measure the voltage between pressure sensor connector and engine ground. ***Connector & terminal*** ***(E21) No. 3 (+) — Engine ground (–):***	s the voltage more than 4.5 V?	Go to step **7.**	Repair open circuit in harness between ECM and pressure sensor connector.

GETtheMANUALS.org

	Step	Check	Yes	No
7	**CHECK HARNESS BETWEEN ECM AND PRESSURE SENSOR CONNECTOR.** 1)Turn the ignition switch to OFF. 2)Disconnect the connector from ECM. 3)Measure the resistance of harness between ECM and pressure sensor connector. ***Connector & terminal*** ***(B135) No. 19 — (E21) No. 2:***	Is the resistance less than 1 Ω?	Go to step **8.**	Repair open circuit in harness between ECM and pressure sensor connector.
8	**CHECK HARNESS BETWEEN ECM AND PRESSURE SENSOR CONNECTOR.** Measure the resistance of harness between pressure sensor connector and engine ground. ***Connector & terminal*** ***(E21) No. 1 — Engine ground:***	Is the resistance more than 1 MΩ?	Go to step **9.**	Repair ground short circuit in harness between ECM and pressure sensor connector.
9	**CHECK POOR CONTACT.** Check poor contact in pressure sensor connector.	Is there poor contact in pressure sensor connector?	Repair poor contact in pressure sensor connector.	Replace the pressure sensor. <Ref. to FU(DOHC TURBO)-35, Pressure Sensor.>

GETtheMANUALS.org

GETtheMANUALS.org

J: DTC P0108 — PRESSURE SENSOR CIRCUIT HIGH INPUT —

- **DTC DETECTING CONDITION:**
  - Immediately at fault recognition

CAUTION:
After repair or replacement of faulty parts, conduct Clear Memory Mode <Ref. to EN(DOHC TURBO)-49, OPERATION, Clear Memory Mode.> and Inspection Mode <Ref. to EN(DOHC TURBO)-46, Inspection Mode.>.

- **WIRING DIAGRAM:**

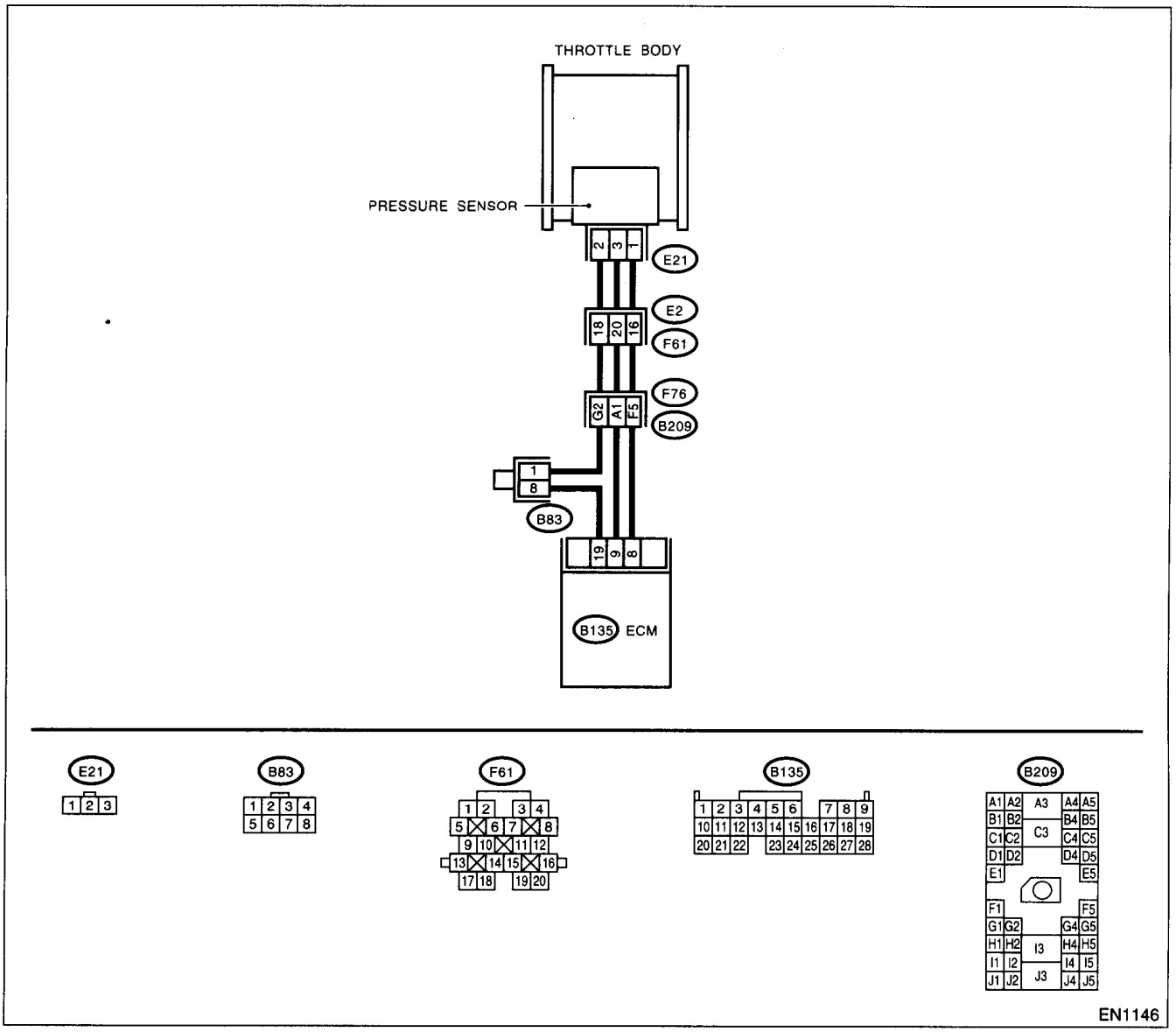

GETtheMANUALS.org

	Step	Check	Yes	No
1	**CHECK CURRENT DATA.** 1)Start the engine. 2)Read the data of intake manifold absolute pressure signal using Subaru Select Monitor or OBD-II general scan tool. NOTE: •Subaru Select Monitor For detailed operation procedure, refer to the "READ CURRENT DATA FOR ENGINE". <Ref. to EN(DOHC TURBO)-38, Subaru Select Monitor.> •OBD-II general scan tool For detailed operation procedures, refer to the OBD-II General Scan Tool Instruction Manual.	Is the value more than 282 kPa (2121 mmHg, 83.50 inHg)?	Go to step **9.**	Go to step **2.**
2	**CHECK INPUT SIGNAL FOR ECM.** Measure the voltage between ECM connector and chassis ground. ***Connector & terminal*** ***(B135) No. 9 (+) — Chassis ground (–):***	Is the voltage more than 4.5 V?	Go to step **4.**	Go to step **3.**
3	**CHECK INPUT SIGNAL FOR ECM.** Measure the voltage between ECM connector and chassis ground. ***Connector & terminal*** ***(B135) No. 9 (+) — Chassis ground (–):***	Does the voltage change more than 4.5 V by shaking harness and connector of ECM while monitoring the value with voltage meter?	Repair poor contact in ECM connector.	Contact with SOA (distributor) service. NOTE: Inspection by DTM is required, because probable cause is deterioration of multiple parts.
4	**CHECK INPUT SIGNAL FOR ECM.** Measure the voltage between ECM connector and chassis ground. ***Connector & terminal*** ***(B135) No. 8 (+) — Chassis ground (–):***	Is the voltage less than 0.7 V?	Go to step **5.**	Contact with SOA (distributor) service. NOTE: Inspection by DTM is required, because probable cause is deterioration of multiple parts.
5	**CHECK HARNESS BETWEEN ECM AND PRESSURE SENSOR CONNECTOR.** 1)Turn the ignition switch to OFF. 2)Disconnect the connector from pressure sensor. 3)Turn the ignition switch to ON. 4)Measure the voltage between pressure sensor connector and engine ground. ***Connector & terminal*** ***(E21) No. 3 (+) — Engine ground (–):***	Is the voltage more than 4.5 V?	Go to step **6.**	Repair open circuit in harness between ECM and pressure sensor connector.
6	**CHECK HARNESS BETWEEN ECM AND PRESSURE SENSOR CONNECTOR.** 1)Turn the ignition switch to OFF. 2)Disconnect the connector from ECM. 3)Measure the resistance of harness between ECM and pressure sensor connector. ***Connector & terminal*** ***(B135) No. 8 — (E21) No. 1:***	Is the resistance less than 1 Ω?	Go to step **7.**	Repair open circuit in harness between ECM and pressure sensor connector.

GETtheMANUALS.org

	Step	Check	Yes	No
7	**CHECK HARNESS BETWEEN ECM AND PRESSURE SENSOR CONNECTOR.** Measure the resistance of harness between ECM and pressure sensor connector. ***Connector & terminal*** ***(B135) No. 19 — (E21) No. 2:***	Is the resistance less than 1 Ω?	Go to step **8.**	Repair open circuit in harness between ECM and pressure sensor connector.
8	**CHECK POOR CONTACT.** Check poor contact in pressure sensor connector.	Is there poor contact in pressure sensor connector?	Repair poor contact in pressure sensor connector.	Replace the pressure sensor. <Ref. to FU(DOHC TURBO)-35, Pressure Sensor.>
9	**CHECK HARNESS BETWEEN ECM AND PRESSURE SENSOR CONNECTOR.** 1)Turn the ignition switch to OFF and Subaru Select Monitor or the OBD-II general scan tool switch to OFF. 2)Disconnect the connector from pressure sensor. 3)Turn the ignition switch to ON and Subaru Select Monitor or the OBD-II general scan tool switch to ON. 4)Read the data of intake manifold absolute pressure signal using Subaru Select Monitor or OBD-II general scan tool. NOTE: •Subaru Select Monitor For detailed operation procedure, refer to the "READ CURRENT DATA FOR ENGINE". <Ref. to EN(DOHC TURBO)-38, Subaru Select Monitor.> •OBD-II general scan tool For detailed operation procedures, refer to the OBD-II General Scan Tool Instruction Manual.	Is the value more than 282 kPa (2121 mmHg, 83.50 inHg)?	Repair battery short circuit in harness between ECM and pressure sensor connector.	Replace the pressure sensor. <Ref. to FU(DOHC TURBO)-35, Pressure Sensor.>

GETtheMANUALS.org

GETtheMANUALS.org

K: DTC P0111 — INTAKE AIR TEMPERATURE SENSOR CIRCUIT RANGE/PERFORMANCE PROBLEM —

- **DTC DETECTING CONDITION:**
  - Two consecutive driving cycles with fault
- **TROUBLE SYMPTOM:**
  - Erroneous idling
  - Poor driving performance

CAUTION:
After repair or replacement of faulty parts, conduct Clear Memory Mode <Ref. to EN(DOHC TURBO)-49, OPERATION, Clear Memory Mode.> and Inspection Mode <Ref. to EN(DOHC TURBO)-46, Inspection Mode.>.

- **WIRING DIAGRAM:**

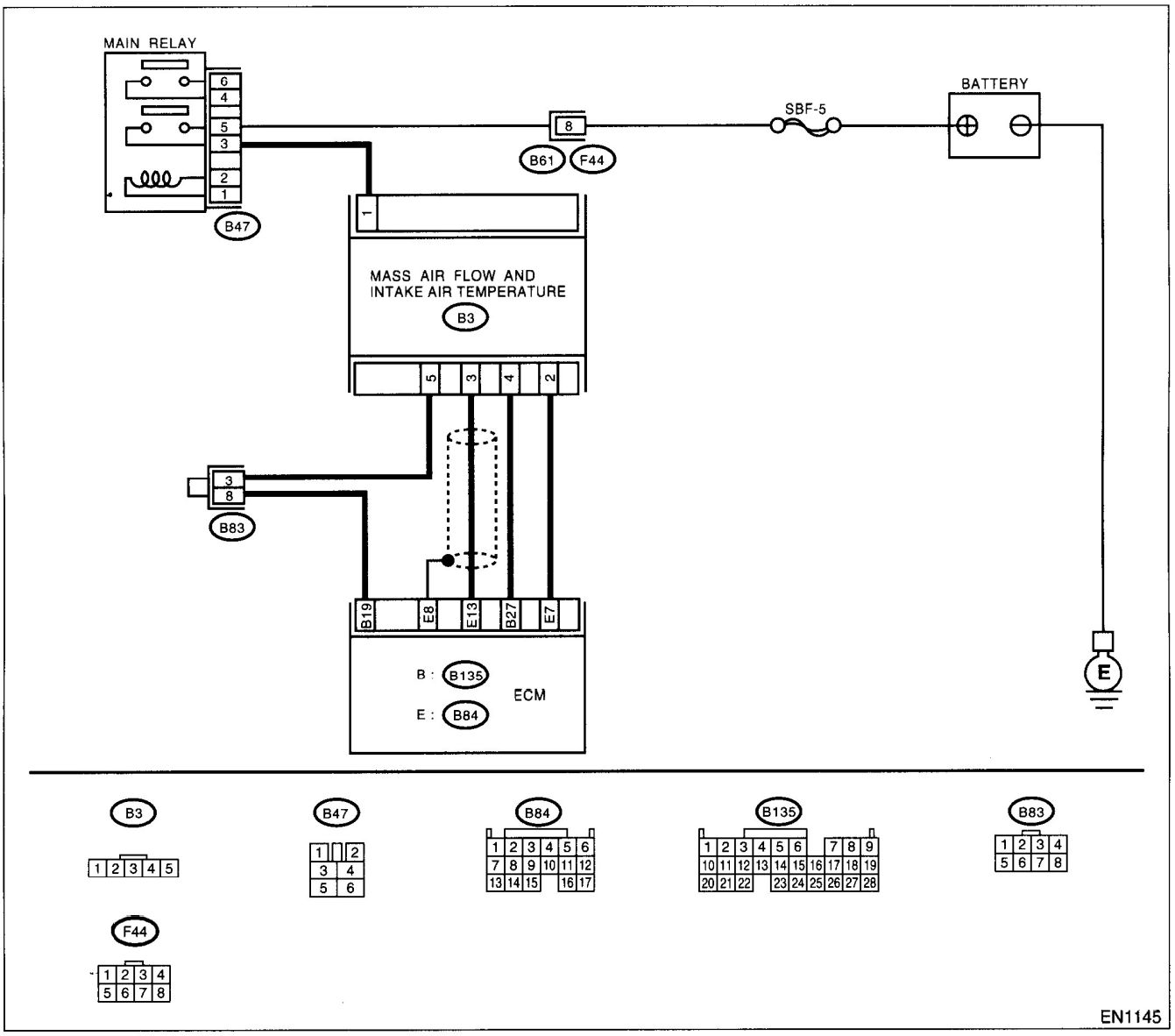

GETtheMANUALS.org

	Step	Check	Yes	No
1	**CHECK ANY OTHER DTC ON DISPLAY.**	Does the Subaru Select Monitor or OBD-II general scan tool indicate DTC P0112, P0113, P0117, P0118 or P0125?	Inspect DTC P0112, P0113, P0117, P0118 or P0125 using "List of Diagnostic Trouble Code (DTC)". <Ref. to EN(DOHC TURBO)-80, List of Diagnostic Trouble Code (DTC).> NOTE: In this case, it is not necessary to inspect DTC P0111.	Go to step **2.**
2	**CHECK ENGINE COOLANT TEMPERATURE.** 1)Start the engine and warm it up completely. 2)Measure the engine coolant temperature using Subaru Select Monitor or OBD-II general scan tool. NOTE: •Subaru Select Monitor For detailed operation procedure, refer to the "READ CURRENT DATA FOR ENGINE". <Ref. to EN(DOHC TURBO)-38, Subaru Select Monitor.> •OBD-II general scan tool For detailed operation procedures, refer to the OBD-II General Scan Tool Instruction Manual.	Is the engine coolant temperature between 75°C (167°F) and 95°C (203°F)?	Replace the mass air flow and intake air temperature sensor. <Ref. to FU(DOHC TURBO)-34, Mass Air Flow and Intake Air Temperature Sensor.>	Inspect DTC P0125 using "List of Diagnostic Trouble Code (DTC)". <Ref. to EN(DOHC TURBO)-80, List of Diagnostic Trouble Code (DTC).>

GETtheMANUALS.org

L: DTC P0112 — INTAKE AIR TEMPERATURE SENSOR CIRCUIT LOW INPUT —

- **DTC DETECTING CONDITION:**
  - Immediately at fault recognition
- **TROUBLE SYMPTOM:**
  - Erroneous idling
  - Poor driving performance

CAUTION:
After repair or replacement of faulty parts, conduct Clear Memory Mode <Ref. to EN(DOHC TURBO)-49, OPERATION, Clear Memory Mode.> and Inspection Mode <Ref. to EN(DOHC TURBO)-46, Inspection Mode.>.

- **WIRING DIAGRAM:**

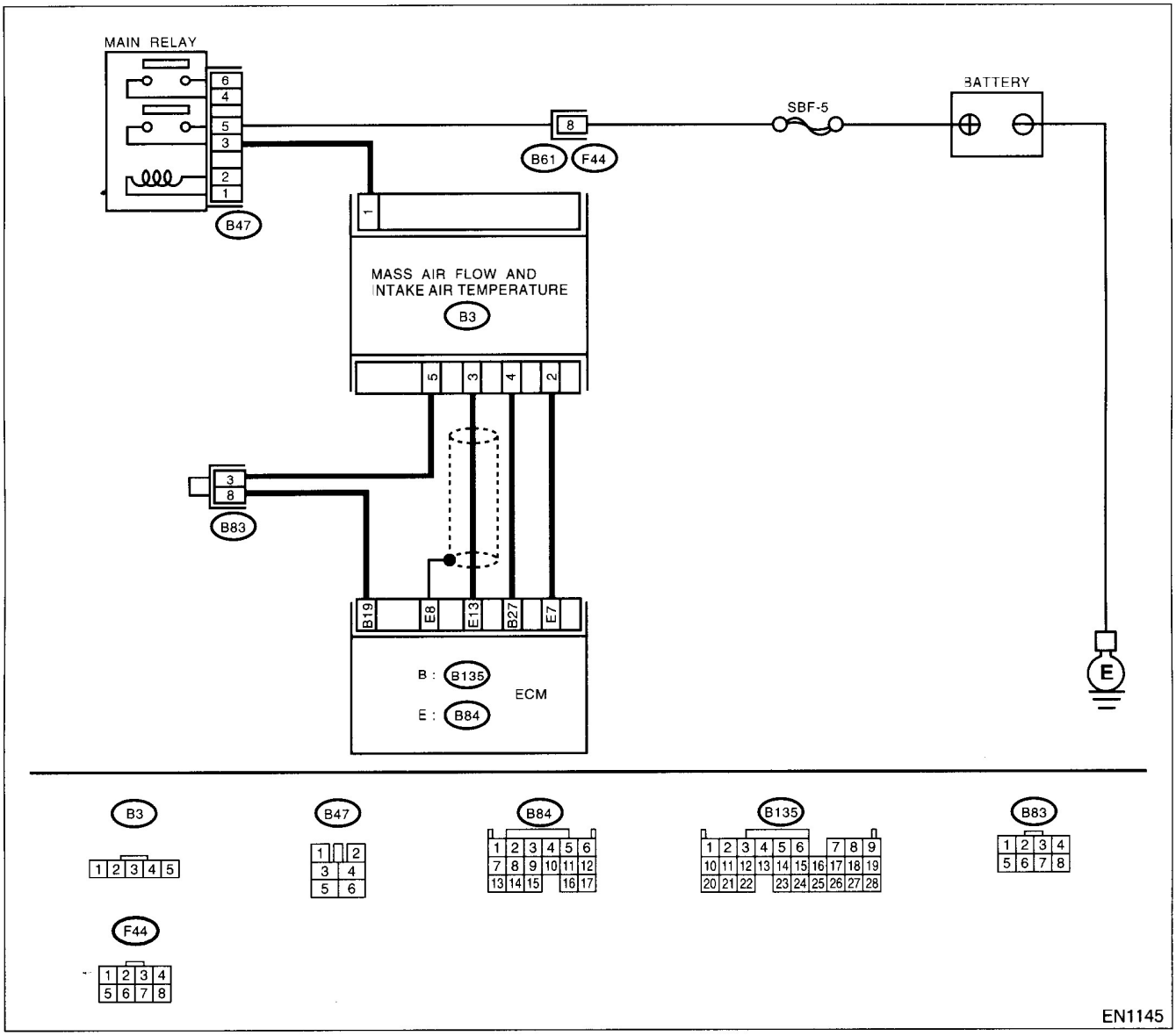

GETtheMANUALS.org

	Step	Check	Yes	No
1	**CHECK CURRENT DATA.** 1)Start the engine. 2)Read the data of intake air temperature sensor signal using Subaru Select Monitor or the OBD-II general scan tool. NOTE: •Subaru Select Monitor For detailed operation procedure, refer to the "READ CURRENT DATA FOR ENGINE". <Ref. to EN(DOHC TURBO)-38, Subaru Select Monitor.> •OBD-II general scan tool For detailed operation procedure, refer to the OBD-II General Scan Tool Instruction Manual.	Is the value greater than 55°C (131°F)?	Go to step **2.**	Repair poor contact. NOTE: In this case, repair the following: • Poor contact mass air flow and intake air temperature sensor • Poor contact in ECM • Poor contact in joint connector
2	**CHECK HARNESS BETWEEN MASS AIR FLOW AND INTAKE AIR TEMPERATURE SENSOR AND ECM CONNECTOR.** 1)Turn the ignition switch to OFF. 2)Disconnect the connector from mass air flow and intake air temperature sensor. 3)Turn the ignition switch to ON. 4)Read the data of intake air temperature sensor signal using Subaru Select Monitor or the OBD-II general scan tool. NOTE: •Subaru Select Monitor For detailed operation procedure, refer to the "READ CURRENT DATA FOR ENGINE". <Ref. to EN(DOHC TURBO)-38, Subaru Select Monitor.> •OBD-II general scan tool For detailed operation procedure, refer to the OBD-II General Scan Tool Instruction Manual.	Is the value less than –36°C (–97°F)?	Replace the mass air flow and intake air temperature sensor. <Ref. to FU(DOHC TURBO)-34, Mass Air Flow and Intake Air Temperature Sensor.>	Repair ground short circuit in harness between mass air flow and intake air temperature sensor and ECM connector.

GETtheMANUALS.org

M: DTC P0113 — INTAKE AIR TEMPERATURE SENSOR CIRCUIT HIGH INPUT —

- **DTC DETECTING CONDITION:**
  - Immediately at fault recognition
- **TROUBLE SYMPTOM:**
  - Erroneous idling
  - Poor driving performance

CAUTION:
After repair or replacement of faulty parts, conduct Clear Memory Mode <Ref. to EN(DOHC TURBO)-49, OPERATION, Clear Memory Mode.> and Inspection Mode <Ref. to EN(DOHC TURBO)-46, Inspection Mode.>.

- **WIRING DIAGRAM:**

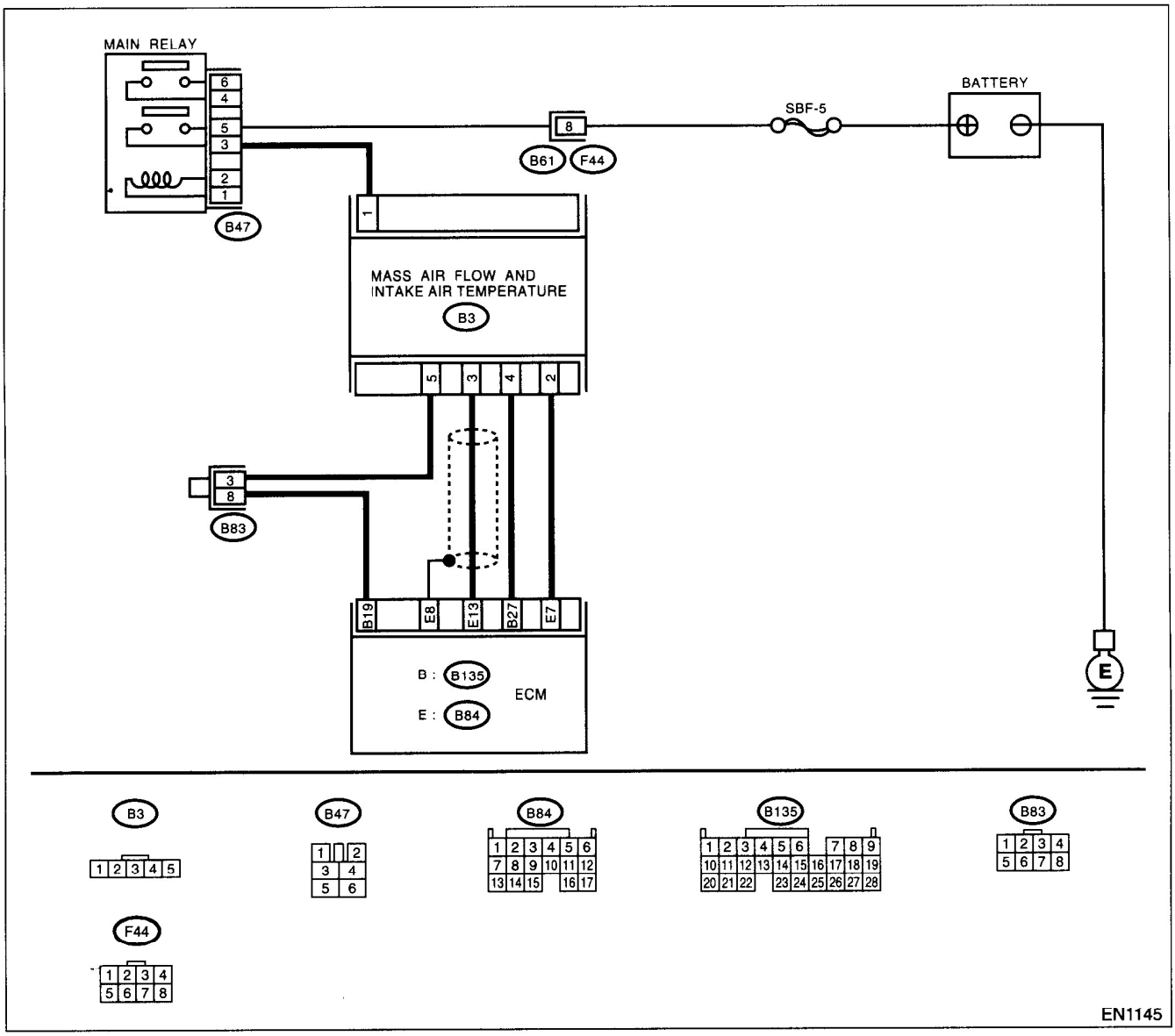

GET theMANUALS.org

	Step	Check	Yes	No
1	**CHECK CURRENT DATA.** 1)Start the engine. 2)Read the data of intake air temperature sensor signal using Subaru Select Monitor or the OBD-II general scan tool. NOTE: •Subaru Select Monitor For detailed operation procedure, refer to the "READ CURRENT DATA FOR ENGINE". <Ref. to EN(DOHC TURBO)-38, Subaru Select Monitor.> •OBD-II general scan tool For detailed operation procedure, refer to the OBD-II General Scan Tool Instruction Manual.	Is the value less than –36°C (–97°F)?	Go to step **2.**	Repair poor contact. NOTE: In this case, repair the following: • Poor contact in mass air flow and intake air temperature sensor • Poor contact in ECM • Poor contact in joint connector
2	**CHECK HARNESS BETWEEN MASS AIR FLOW AND INTAKE AIR TEMPERATURE SENSOR AND ECM CONNECTOR.** 1)Turn the ignition switch to OFF. 2)Disconnect the connector from mass air flow and intake air temperature sensor. 3)Measure the voltage between mass air flow and intake air temperature sensor connector and engine ground. ***Connector & terminal*** ***(B3) No. 2 (+) — Engine ground (–):***	Is the voltage more than 10 V?	Repair battery short circuit in harness between mass air flow and intake air temperature sensor and ECM connector.	Go to step **3.**
3	**CHECK HARNESS BETWEEN INTAKE AIR TEMPERATURE AND PRESSURE SENSOR AND ECM CONNECTOR.** 1)Turn the ignition switch to ON. 2)Measure the voltage between mass air flow and intake air temperature sensor connector and engine ground. ***Connector & terminal*** ***(B3) No. 2 (+) — Engine ground (–):***	Is the voltage more than 10 V?	Repair battery short circuit in harness between mass air flow and intake air temperature sensor and ECM connector.	Go to step **4.**
4	**CHECK HARNESS BETWEEN MASS AIR FLOW AND INTAKE AIR TEMPERATURE SENSOR AND ECM CONNECTOR.** Measure the voltage between mass air flow and intake air temperature sensor and pressure sensor connector and engine ground. ***Connector & terminal*** ***(B3) No. 2 (+) — Engine ground (–):***	Is the voltage more than 3 V?	Go to step **5.**	Repair harness and connector. NOTE: In this case, repair the following: • Open circuit in harness between mass air flow and intake air temperature sensor and ECM connector • Poor contact in mass air flow and intake air temperature sensor • Poor contact in ECM • Poor contact in joint connector

GETtheMANUALS.org

	Step	Check	Yes	No
5	**CHECK HARNESS BETWEEN MASS AIR FLOW AND INTAKE AIR TEMPERATURE SENSOR AND ECM CONNECTOR.** 1)Turn the ignition switch to OFF. 2)Measure the resistance of harness between mass air flow and intake air temperature sensor and engine ground. ***Connector & terminal*** ***(B3) No. 5 — Engine ground:***	Is the resistance less than 5 Ω?	Replace the mass air flow and intake air temperature sensor. <Ref. to FU(DOHC TURBO)-34, Mass Air Flow and Intake Air Temperature Sensor.>	Repair harness and connector. NOTE: In this case, repair the following: • Open circuit in ness between mass air flow and intake air temperature sensor and ECM connector • Poor contact in mass air flow and intake air temperature sensor • Poor contact in ECM • Poor contact in joint connector

GETtheMANUALS.org

GETtheMANUALS.org

N: DTC P0117 — ENGINE COOLANT TEMPERATURE SENSOR CIRCUIT LOW INPUT —

- **DTC DETECTING CONDITION:**
  - Immediately at fault recognition
- **TROUBLE SYMPTOM:**
  - Hard to start
  - Erroneous idling
  - Poor driving performance

CAUTION:
After repair or replacement of faulty parts, conduct Clear Memory Mode <Ref. to EN(DOHC TURBO)-49, OPERATION, Clear Memory Mode.> and Inspection Mode <Ref. to EN(DOHC TURBO)-46, Inspection Mode.>.

- **WIRING DIAGRAM:**

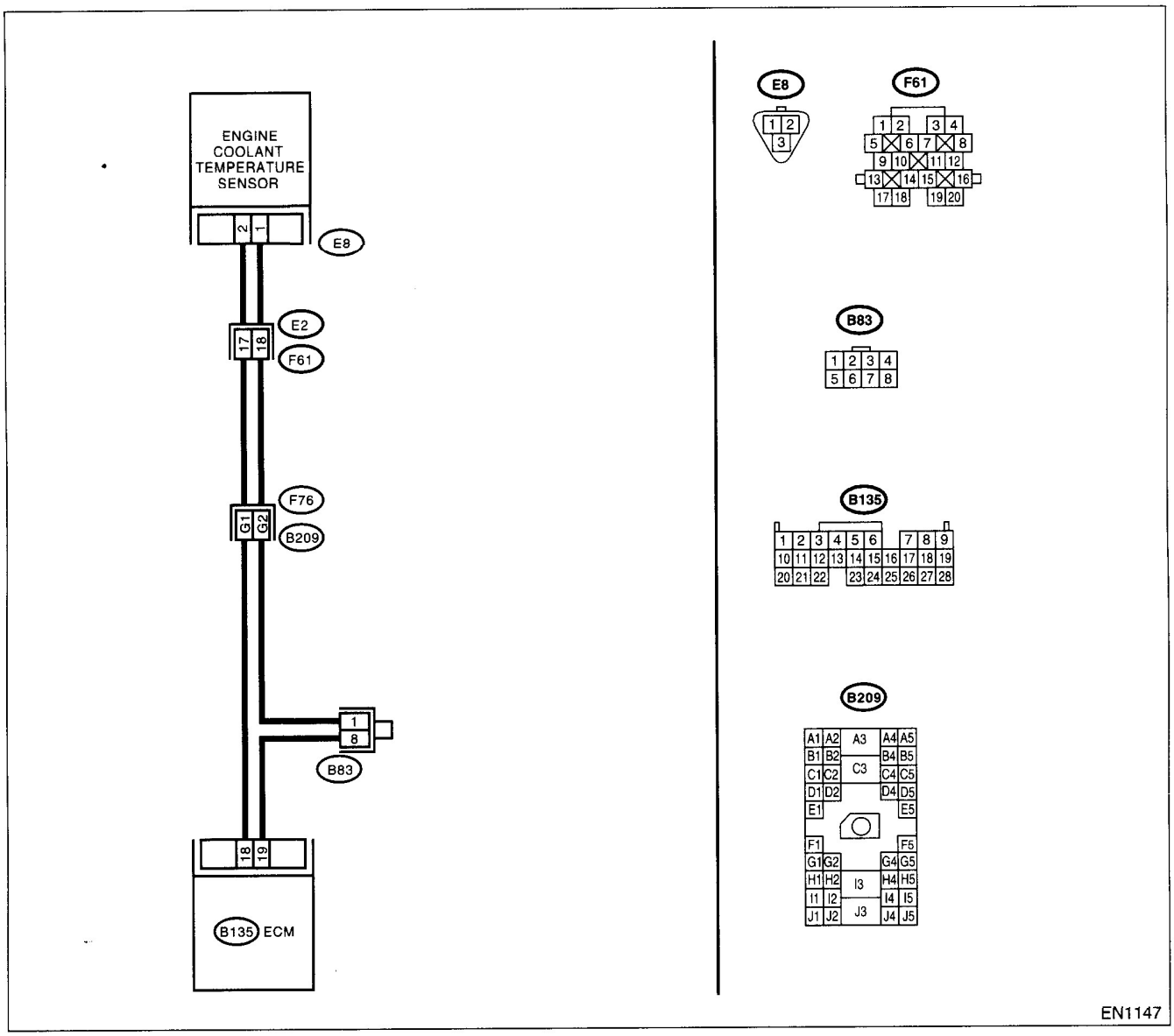

GETtheMANUALS.org

	Step	Check	Yes	No
1	**CHECK CURRENT DATA.** 1)Start the engine. 2)Read the data of engine coolant temperature sensor signal using Subaru Select Monitor or OBD-II general scan tool. NOTE: •Subaru Select Monitor For detailed operation procedure, refer to the "READ CURRENT DATA FOR ENGINE". <Ref. to EN(DOHC TURBO)-38, Subaru Select Monitor.> •OBD-II general scan tool For detailed operation procedures, refer to the OBD-II General Scan Tool Instruction Manual.	Is the value greater than 150°C (302°F)?	Go to step **2.**	Repair poor contact. NOTE: In this case, repair the following: • Poor contact in engine coolant temperature sensor • Poor contact in ECM • Poor contact in coupling connector • Poor contact in joint connector
2	**CHECK HARNESS BETWEEN ENGINE COOLANT TEMPERATURE SENSOR AND ECM CONNECTOR.** 1)Turn the ignition switch to OFF. 2)Disconnect the connector from engine coolant temperature sensor. 3)Turn the ignition switch to ON. 4)Read the data of engine coolant temperature sensor signal using Subaru Select Monitor or OBD-II general scan tool. NOTE: •Subaru Select Monitor For detailed operation procedure, refer to the "READ CURRENT DATA FOR ENGINE". <Ref. to EN(DOHC TURBO)-38, Subaru Select Monitor.> •OBD-II general scan tool For detailed operation procedures, refer to the OBD-II General Scan Tool Instruction Manual.	Is the value less than –40°C (–40°F)?	Replace the engine coolant temperature sensor. <Ref. to FU(DOHC TURBO)-29, Engine Coolant Temperature Sensor.>	Repair ground short circuit in harness between engine coolant temperature sensor and ECM connector.

GETtheMANUALS.org

O: DTC P0118 — ENGINE COOLANT TEMPERATURE SENSOR CIRCUIT HIGH INPUT —

- **DTC DETECTING CONDITION:**
  - Immediately at fault recognition
- **TROUBLE SYMPTOM:**
  - Hard to start
  - Erroneous idling
  - Poor driving performance

CAUTION:
After repair or replacement of faulty parts, conduct Clear Memory Mode <Ref. to EN(DOHC TURBO)-49, OPERATION, Clear Memory Mode.> and Inspection Mode <Ref. to EN(DOHC TURBO)-46, Inspection Mode.>.

- **WIRING DIAGRAM:**

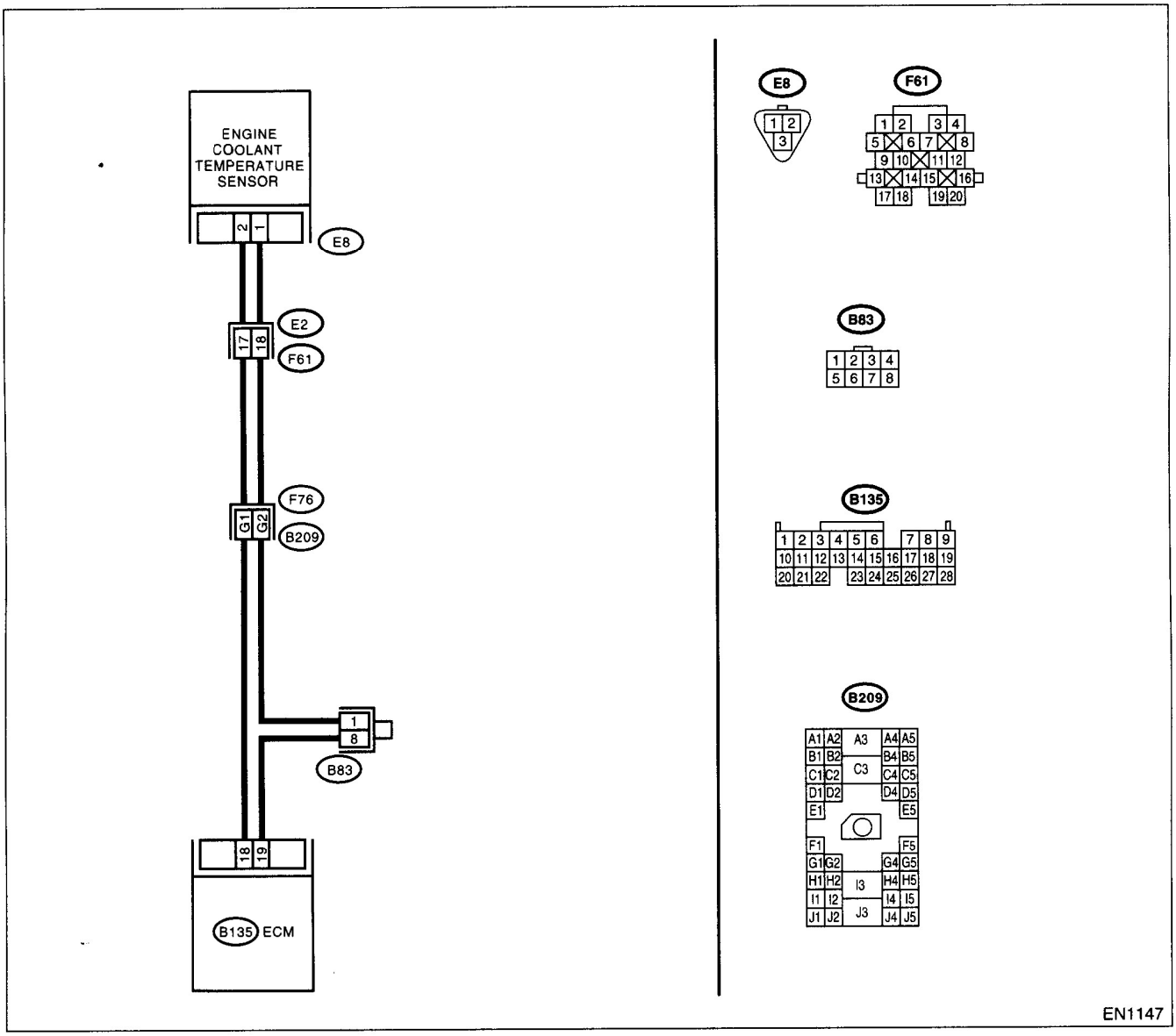

EN1147

GETtheMANUALS.org

	Step	Check	Yes	No
1	**CHECK CURRENT DATA.** 1)Start the engine. 2)Read the data of engine coolant temperature sensor signal using Subaru Select Monitor or OBD-II general scan tool. NOTE: •Subaru Select Monitor For detailed operation procedure, refer to the "READ CURRENT DATA FOR ENGINE". <Ref. to EN(DOHC TURBO)-38, Subaru Select Monitor.> •OBD-II general scan tool For detailed operation procedures, refer to the OBD-II General Scan Tool Instruction Manual.	Is the value less than –40°C (–40°F)?	Go to step **2.**	Repair poor contact. NOTE: In this case, repair the following: • Poor contact in engine coolant temperature sensor • Poor contact in ECM • Poor contact in coupling connector • Poor contact in joint connector
2	**CHECK HARNESS BETWEEN ENGINE COOLANT TEMPERATURE SENSOR AND ECM CONNECTOR.** 1)Turn the ignition switch to OFF. 2)Disconnect the connector from engine coolant temperature sensor. 3)Measure the voltage between engine coolant temperature sensor connector and engine ground. ***Connector & terminal*** ***(E8) No. 2 (+) — Engine ground (–):***	Is the voltage more than 10 V?	Repair battery short circuit in harness between ECM and engine coolant temperature sensor connector.	Go to step **3.**
3	**CHECK HARNESS BETWEEN ENGINE COOLANT TEMPERATURE SENSOR AND ECM CONNECTOR.** 1)Turn the ignition switch to ON. 2)Measure the voltage between engine coolant temperature sensor connector and engine ground. ***Connector & terminal*** ***(E8) No. 2 (+) — Engine ground (–):***	Is the voltage more than 10 V?	Repair battery short circuit in harness between ECM and engine coolant temperature sensor connector.	Go to step **4.**
4	**CHECK HARNESS BETWEEN ENGINE COOLANT TEMPERATURE SENSOR AND ECM CONNECTOR.** Measure the voltage between engine coolant temperature sensor connector and engine ground. ***Connector & terminal*** ***(E8) No. 2 (+) — Engine ground (–):***	Is the voltage more than 4 V?	Go to step **5.**	Repair harness and connector. NOTE: In this case, repair the following: • Open circuit in harness between ECM and engine coolant temperature sensor connector • Poor contact in engine coolant temperature sensor connector • Poor contact in ECM connector • Poor contact in coupling connector • Poor contact in joint connector

GETtheMANUALS.org

	Step	Check	Yes	No
5	**CHECK HARNESS BETWEEN ENGINE COOLANT TEMPERATURE SENSOR AND ECM CONNECTOR.** 1)Turn the ignition switch to OFF. 2)Measure the resistance of harness between engine coolant temperature sensor connector and engine ground. ***Connector & terminal*** ***(E8) No. 1 — Engine ground:***	Is the resistance less than 5 Ω?	Replace the engine coolant temperature sensor. <Ref. to FU(DOHC TURBO)-29, Engine Coolant Temperature Sensor.>	Repair harness and connector. NOTE: In this case, repair the following: • Open circuit in harness between ECM and engine coolant temperature sensor connector • Poor contact in engine coolant temperature sensor connector • Poor contact in ECM connector • Poor contact in coupling connector • Poor contact in joint connector

GETtheMANUALS.org

GETtheMANUALS.org

P: DTC P0121 — THROTTLE POSITION SENSOR CIRCUIT RANGE/PERFORMANCE PROBLEM (HIGH INPUT) —

- **DTC DETECTING CONDITION:**
  - Two consecutive driving cycles with fault
- **TROUBLE SYMPTOM:**
  - Erroneous idling
  - Engine stalls.
  - Poor driving performance
  - Fuel is cut.

CAUTION:
After repair or replacement of faulty parts, conduct Clear Memory Mode <Ref. to EN(DOHC TURBO)-49, OPERATION, Clear Memory Mode.> and Inspection Mode <Ref. to EN(DOHC TURBO)-46, Inspection Mode.>.

- **WIRING DIAGRAM:**

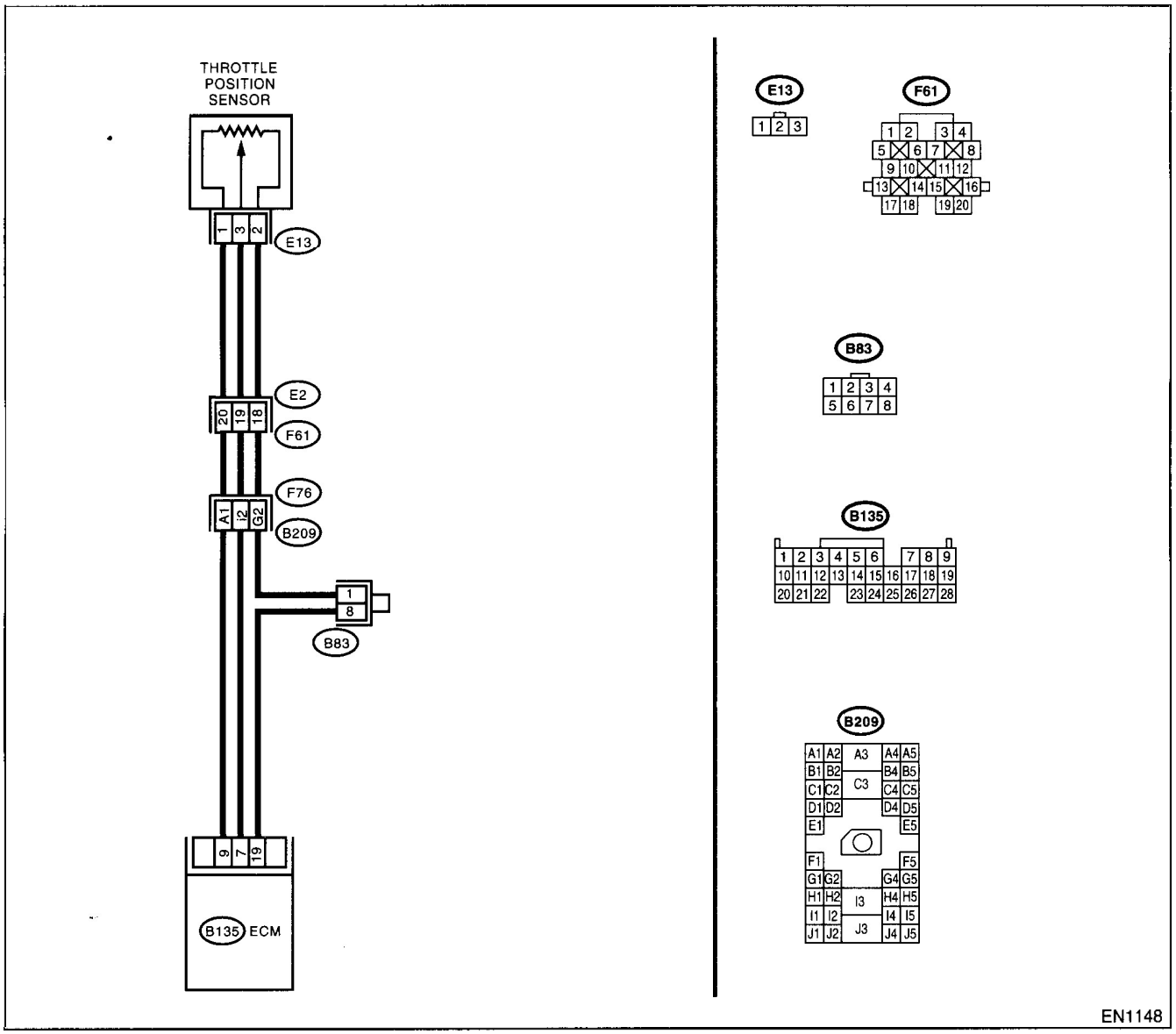

GETtheMANUALS.org

Step		Check	Yes	No
1	**CHECK ANY OTHER DTC ON DISPLAY.**	Does the Subaru Select Monitor or OBD-II general scan tool indicate DTC P0122, P0123 or P1507?	Inspect DTC P0122, P0123 or P1507 using " List of Diagnostic Trouble Code (DTC)". <Ref. to EN(DOHC TURBO)-80, List of Diagnostic Trouble Code (DTC).> NOTE: In this case, it is not necessary to inspect DTC P0121.	Replace the throttle position sensor. <Ref. to FU(DOHC TURBO)-33, Throttle Position Sensor.>

GETtheMANUALS.org

Q: DTC P0122 — THROTTLE POSITION SENSOR CIRCUIT LOW INPUT —

- **DTC DETECTING CONDITION:**
  - Immediately at fault recognition
- **TROUBLE SYMPTOM:**
  - Erroneous idling
  - Engine stalls.
  - Poor driving performance

CAUTION:
After repair or replacement of faulty parts, conduct Clear Memory Mode <Ref. to EN(DOHC TURBO)-49, OPERATION, Clear Memory Mode.> and Inspection Mode <Ref. to EN(DOHC TURBO)-46, Inspection Mode.>.

- **WIRING DIAGRAM:**

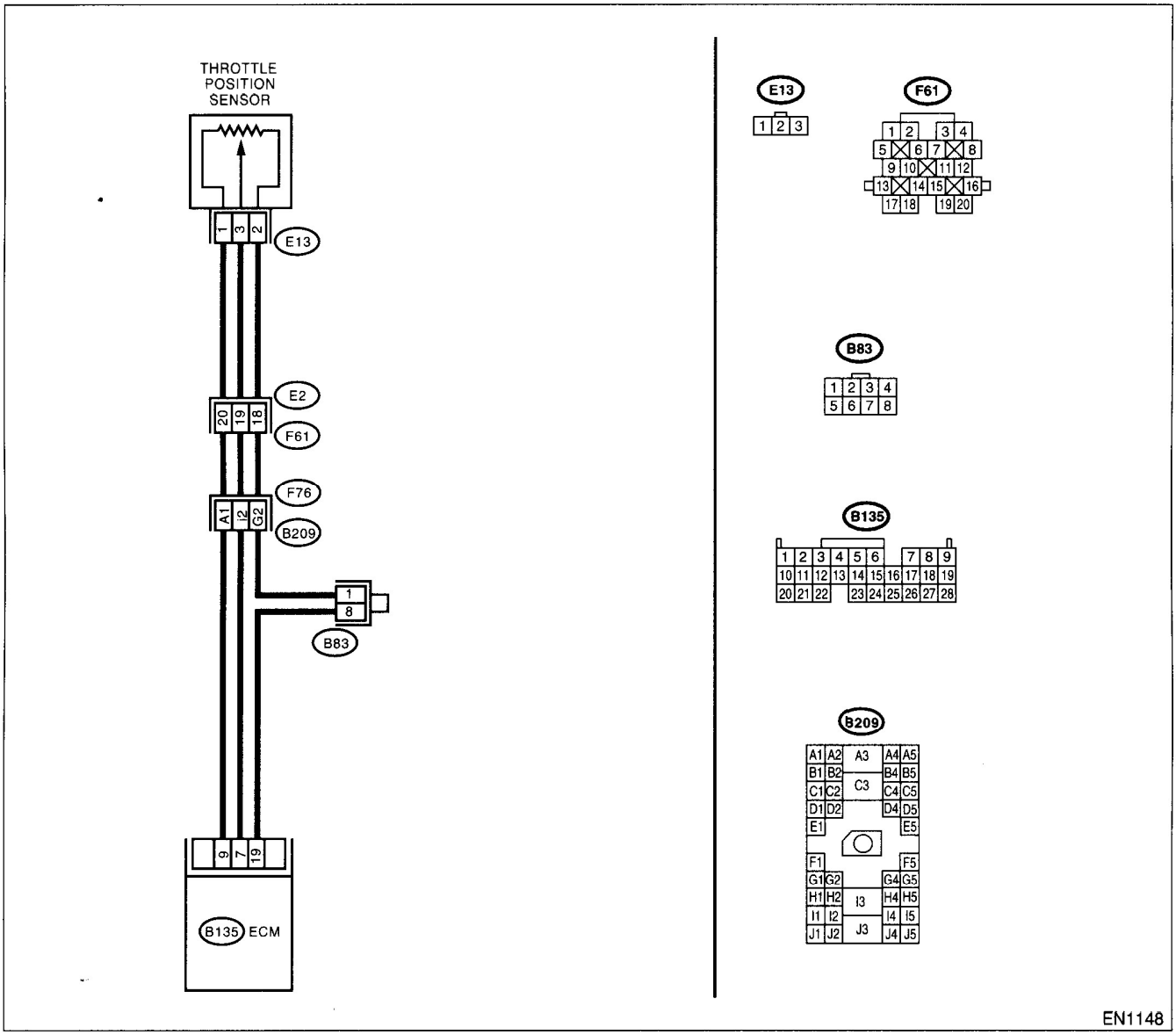

GETtheMANUALS.org

Step	Check	Yes	No
CHECK CURRENT DATA. 1)Start the engine. 2)Read the data of throttle position sensor signal using Subaru Select Monitor or OBD-II general scan tool. NOTE: •Subaru Select Monitor For detailed operation procedure, refer to the "READ CURRENT DATA FOR ENGINE". <Ref. to EN(DOHC TURBO)-38, Subaru Select Monitor.> •OBD-II general scan tool For detailed operation procedures, refer to the OBD-II General Scan Tool Instruction Manual.	s the value less than 0.1 V?	Go to step **2.**	Even if MIL lights up, the circuit has returned to a normal condition at this time. A tempo rary poor contact of the connector may be the cause NOTE: In this case, repai the following: • Poor contact in throttle position sensor connector • Poor contact in ECM connector • Poor contact in coupling connectc
CHECK INPUT SIGNAL FOR ECM. Measure the voltage between ECM connector and chassis ground while throttle valve is fully closed. ***Connector & terminal*** ***(B135) No. 9 (+) — Chassis ground (–):***	s the voltage more than 4.5 V'	Go to step **4.**	Go to step **3.**
CHECK INPUT SIGNAL FOR ECM. Measure the voltage between ECM connector and chassis ground. ***Connector & terminal*** ***(B135) No. 9 (+) — Chassis ground (–):***	Does the voltage change more han 4.5 V by shaking harness and connector of ECM while nonitoring the value with voltage meter?	Repair poor contact in ECM connector.	Contact with SOA (distributor) service. NOTE: Inspection by DTM is required, be cause probabl cause is deteriora tion of multipl parts.
CHECK INPUT SIGNAL FOR ECM. Measure the voltage between ECM connector and chassis ground. ***Connector & terminal*** ***(B135) No. 7 (+) — Chassis ground (–):***	s the voltage less than 0.1 V?	Go to step **6.**	Go to step **5.**
CHECK INPUT SIGNAL FOR ECM. (USING SUBARU SELECT MONITOR.) Measure the voltage between ECM connector and chassis ground.	Does the voltage change more han 0.1 V by shaking harness and connector of ECM while nonitoring the value with Subaru Select Monitor?	Repair poor contact in ECM connector.	Go to step **6.**

GETtheMANUALS.org

	Step	Check	Yes	No
6	**CHECK HARNESS BETWEEN ECM AND THROTTLE POSITION SENSOR CONNECTOR.** 1)Turn the ignition switch to OFF. 2)Disconnect the connectors from throttle position sensor. 3)Turn the ignition switch to ON. 4)Measure the voltage between throttle position sensor connector and engine ground. ***Connector & terminal*** ***(E13) No. 1 (+) — Engine ground (–):***	Is the voltage more than 4.5 V?	Go to step **7.**	Repair harness and connector. NOTE: In this case, repair the following: • Open circuit in harness between throttle position sensor and ECM connector • Poor contact in throttle position sensor connector • Poor contact in ECM connector • Poor contact in coupling connector • Poor contact in joint connector
7	**CHECK HARNESS BETWEEN ECM AND THROTTLE POSITION SENSOR CONNECTOR.** 1)Turn the ignition switch to OFF. 2)Measure the resistance of harness between ECM connector and throttle position sensor connector. ***Connector & terminal*** ***(B135) No. 7 — (E13) No. 3:***	Is the resistance less than 1 Ω?	Go to step **8.**	Repair harness and connector. NOTE: In this case, repair the following: • Open circuit in harness between throttle position sensor and ECM connector • Poor contact in ECM connector • Poor contact in throttle position sensor connector • Poor contact in coupling connector
8	**CHECK HARNESS BETWEEN ECM AND THROTTLE POSITION SENSOR CONNECTOR.** Measure the resistance of harness between throttle position sensor connector and engine ground. ***Connector & terminal*** ***(E13) No. 3 — Engine ground:***	Is the resistance less than 10 Ω?	Repair ground short circuit in harness between throttle position sensor and ECM connector.	Go to step **9.**
9	**CHECK POOR CONTACT.** Check poor contact in throttle position sensor connector.	Is there poor contact in throttle position sensor connector?	Repair poor contact in throttle position sensor connector.	Replace the throttle position sensor. <Ref. to FU(DOHC TURBO)-33, Throttle Position Sensor.>

GETtheMANUALS.org

GETtheMANUALS.org

R: DTC P0123 — THROTTLE POSITION SENSOR CIRCUIT HIGH INPUT —

- **DTC DETECTING CONDITION:**
  - Immediately at fault recognition
- **TROUBLE SYMPTOM:**
  - Erroneous idling
  - Engine stalls.
  - Poor driving performance

CAUTION:
After repair or replacement of faulty parts, conduct Clear Memory Mode <Ref. to EN(DOHC TURBO)-49, OPERATION, Clear Memory Mode.> and Inspection Mode <Ref. to EN(DOHC TURBO)-46, Inspection Mode.>.

- **WIRING DIAGRAM:**

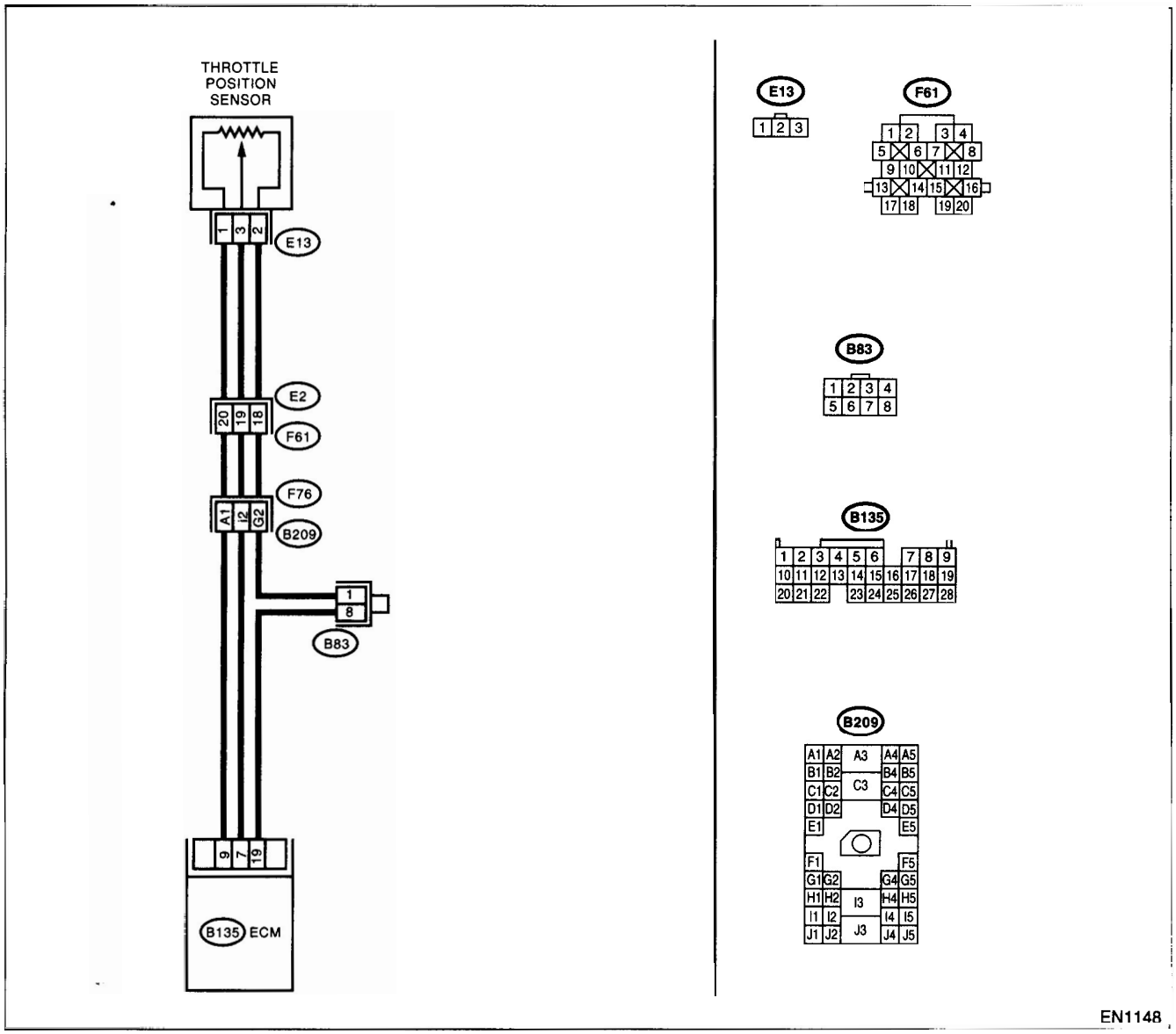

GETtheMANUALS.org

	Step	Check	Yes	No
1	**CHECK CURRENT DATA.** 1)Start the engine. 2)Read the data of throttle position sensor signal using Subaru Select Monitor or OBD-II general scan tool. NOTE: •Subaru Select Monitor For detailed operation procedure, refer to the "READ CURRENT DATA FOR ENGINE". <Ref. to EN(DOHC TURBO)-38, *Subaru Select Monitor.*> •OBD-II general scan tool For detailed operation procedures, refer to the OBD-II General Scan Tool Instruction Manual.	Is the value more than 4.9 V?	Go to step **2.**	Even if MIL lights up, the circuit has returned to a normal condition at this time. A temporary poor contact of the connector may be the cause. NOTE: In this case, repair the following: • Poor contact in throttle position sensor connector • Poor contact in ECM connector • Poor contact in coupling connector
2	**CHECK HARNESS BETWEEN THROTTLE POSITION SENSOR AND ECM CONNECTOR.** 1)Turn the ignition switch to OFF. 2)Disconnect the connector from throttle position sensor. 3)Measure the resistance of harness between throttle position sensor connector and engine ground. ***Connector & terminal*** ***(E13) No. 2 — Engine ground:***	Is the resistance less than 5 Ω?	Go to step **3.**	Repair harness and connector. NOTE: In this case, repair the following: • Open circuit in harness between throttle position sensor and ECM connector • Poor contact in coupling connector • Poor contact in joint connector
3	**CHECK HARNESS BETWEEN THROTTLE POSITION SENSOR AND ECM CONNECTOR.** 1)Turn the ignition switch to ON. 2)Measure the voltage between throttle position sensor connector and engine ground. ***Connector & terminal*** ***(E13) No. 3 (+) — Engine ground (–):***	Is the voltage more than 4.9 V?	Repair battery short circuit in harness between throttle position sensor and ECM connector. After repair, replace the ECM. <Ref. to FU(DOHC TURBO)-47, Engine Control Module.>	Replace the throttle position sensor. <Ref. to FU(DOHC TURBO)-33, *Throttle Position Sensor.*>

GETtheMANUALS.org

S: DTC P0125 — INSUFFICIENT COOLANT TEMPERATURE FOR CLOSED LOOP FUEL CONTROL —

- **DTC DETECTING CONDITION:**
  - Two consecutive driving cycles with fault
- **TROUBLE SYMPTOM:**
  - Engine would not return to idling.

CAUTION:
After repair or replacement of faulty parts, conduct Clear Memory Mode <Ref. to EN(DOHC TURBO)-49, OPERATION, Clear Memory Mode.> and Inspection Mode <Ref. to EN(DOHC TURBO)-46, Inspection Mode.>.

- **WIRING DIAGRAM:**

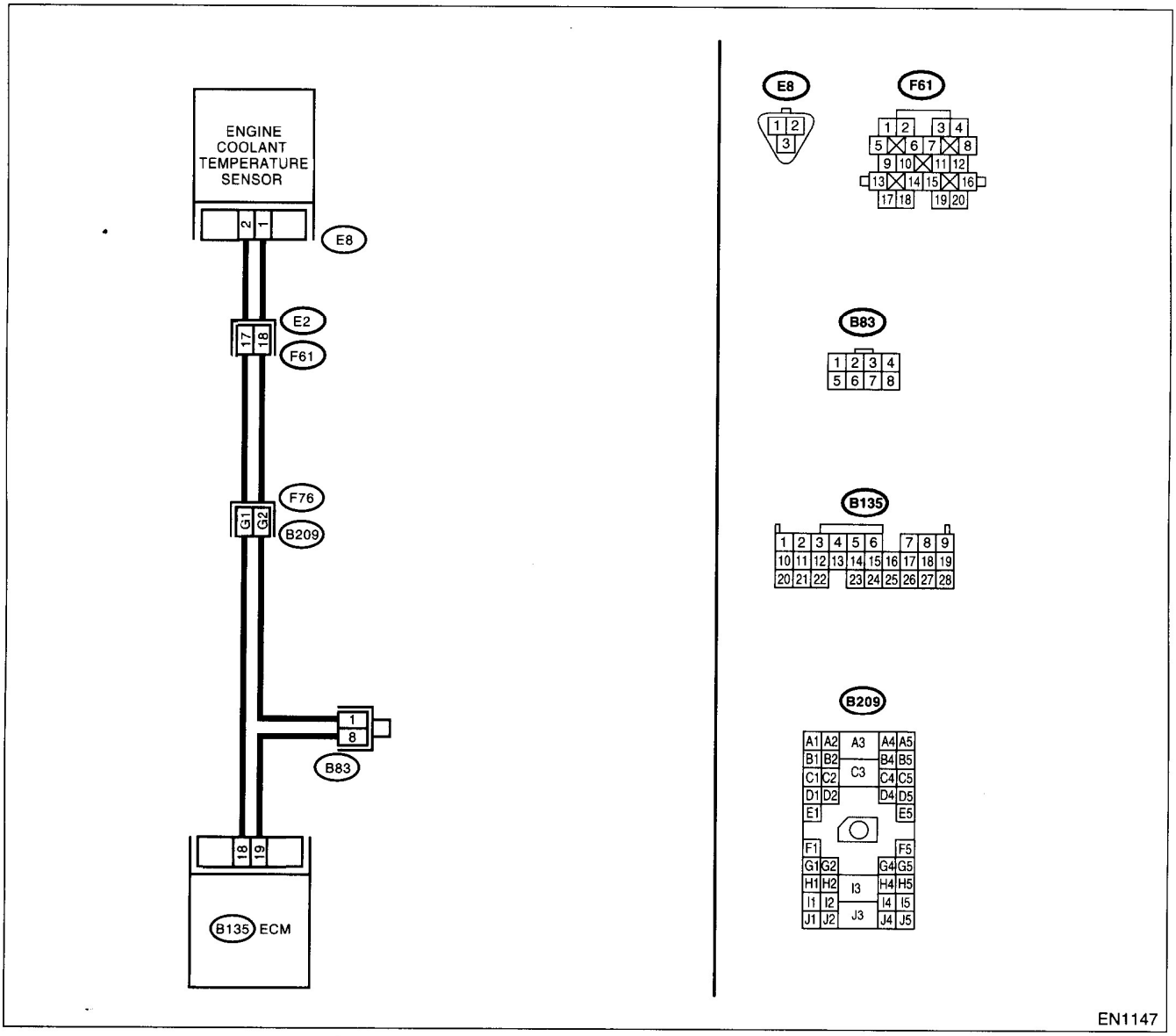

GETtheMANUALS.org

	Step	Check	Yes	No
1	**CHECK ANY OTHER DTC ON DISPLAY.**	Does the Subaru Select Monitor or OBD-II general scan tool indicate DTC P0117 or P0118?	Inspect DTC P0117 or P0118 using "List of Diagnostic Trouble Code (DTC)". <Ref. to EN(DOHC TURBO)-80, List of Diagnostic Trouble Code (DTC).> NOTE: In this case, it is not necessary to inspect DTC P0125.	Go to step **2.**
2	**CHECK ENGINE COOLING SYSTEM.** NOTE: Check the following items. •Thermostat open stuck •Coolant level •Coolant freeze •Tire diameter	Is there a fault in engine cooling system?	Replace the thermostat. <Ref. to CO-35, Thermostat.>	Replace the engine coolant temperature sensor. <Ref. to FU(DOHC TURBO)-29, Engine Coolant Temperature Sensor.>

GETtheMANUALS.org

T: DTC P0128 — THERMOSTAT MALFUNCTION —

- **DTC DETECTING CONDITION:**
  - Two consecutive driving cycles with fault
- **TROUBLE SYMPTOM:**
  - Thermostat remains open.

CAUTION:
After repair or replacement of faulty parts, conduct Clear Memory Mode <Ref. to EN(DOHC TURBO)-49, OPERATION, Clear Memory Mode.> and Inspection Mode <Ref. to EN(DOHC TURBO)-46, Inspection Mode.>.

	Step	Check	Yes	No
1	**CHECK VEHICLE CONDITION.**	Has engine operated at idle or has vehicle been driven with part of engine submerged under water?	In this case, it is not necessary to inspect DTC P0128.	Go to step **2.**
2	**CHECK ANY OTHER DTC ON DISPLAY.**	Does the Subaru Select Monitor or OBD-II general scan tool indicate DTC P0125, P0301, P0302, P0303, P0304, P0305 and P0306 at same time?	Go to step **3.**	Inspect DTC P0125, P0301, P0302, P0303, P0304, P0305 and P0306 using "List of Diagnostic Trouble Code (DTC)". <Ref. to EN(DOHC TURBO)-80, List of Diagnostic Trouble Code (DTC).>
3	**CHECK ENGINE COOLANT.**	Are coolant level and mixture ratio of cooling water to anti-freeze solution correct?	Go to step **4.**	Replace the engine coolant. <Ref. to CO-25, REPLACEMENT, Engine Coolant.>
4	**CHECK RADIATOR FAN.** 1)Start the engine. 2)Check radiator fan operation.	Does the radiator fan continuously rotate for more than 3 minutes during idling?	Repair radiator fan circuit. <Ref. to CO-46, Radiator Main Fan and Fan Motor.> and <Ref. to CO-48, Radiator Sub Fan and Fan Motor.>	Replace the thermostat. <Ref. to CO-35, Thermostat.>

GETtheMANUALS.org

U: DTC P0131 — FRONT OXYGEN (A/F) SENSOR CIRCUIT RANGE/PERFORMANCE PROBLEM (LOW INPUT) —

NOTE:
For the diagnostic procedure, refer to DTC P0132. <Ref. to EN(DOHC TURBO)-144, DTC P0132 — FRONT OXYGEN (A/F) SENSOR CIRCUIT RANGE/PERFORMANCE PROBLEM (HIGH INPUT) —, Diagnostic Procedure with Diagnostic Trouble Code (DTC).>

GETtheMANUALS.org

V: DTC P0132 — FRONT OXYGEN (A/F) SENSOR CIRCUIT RANGE/PERFORMANCE PROBLEM (HIGH INPUT) —

- **DTC DETECTING CONDITION:**
  - Two consecutive driving cycles with fault

CAUTION:
After repair or replacement of faulty parts, conduct Clear Memory Mode <Ref. to EN(DOHC TURBO)-49, OPERATION, Clear Memory Mode.> and Inspection Mode <Ref. to EN(DOHC TURBO)-46, Inspection Mode.>.

- **WIRING DIAGRAM:**

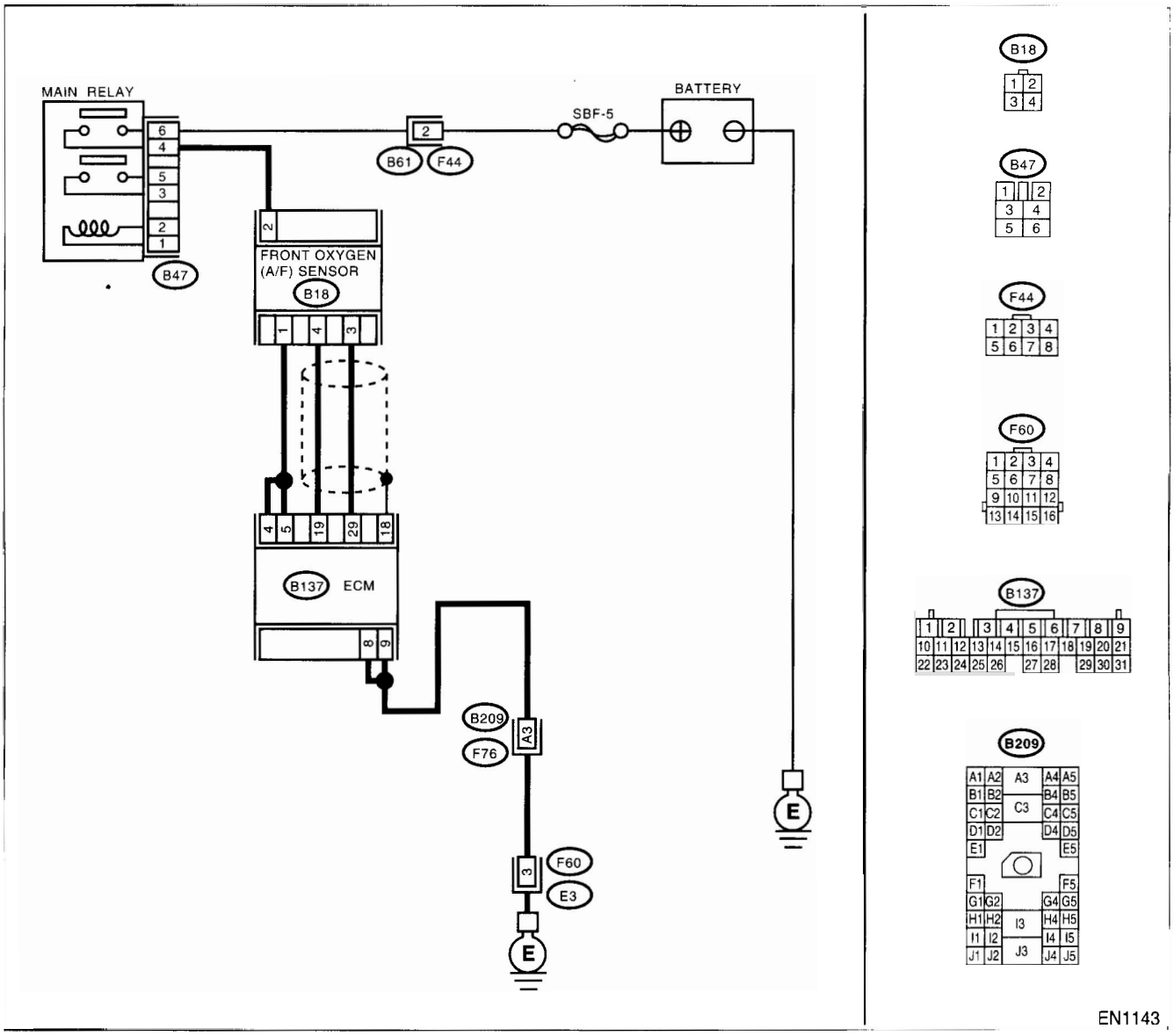

GETtheMANUALS.org

Step	Check	Yes	No
CHECK ANY OTHER DTC ON DISPLAY.	)oes the Subaru Select Moni-or or OBD-II general scan tool ndicate DTC P0031, P0032, ³1131, P1134 or P1139?	nspect DTC ³0031, P0032, ³1131, P1134 or ³1139 using "List)f Diagnostic Trou-)le Code DTC)".<Ref. to ΞN(DOHC ΓURBO)-80, List)f Diagnostic Trou-)le Code (DTC).>	Go to step **2.**
CHECK FRONT (A/F) OXYGEN SENSOR DA-TA. 1)Start the engine. 2)While observing the Subaru Select Monitor or OBD-II general scan tool screen, warm-up the engine until coolant temperature is above 70°C (158°F). If the engine is already warmed-up, operate at idle speed for at least 1 minute. 3)Read the data of front oxygen (A/F) sensor signal using Subaru Select Monitor or OBD-II general scan tool. NOTE: •Subaru Select Monitor For detailed operation procedure, refer to the "READ CURRENT DATA FOR ENGINE". <Ref. to EN(DOHC TURBO)-38, Subaru Select Mon-itor.> •OBD-II general scan tool For detailed operation procedures, refer to the OBD-II General Scan Tool Instruction Manual.	s the value equal to or more han 0.85 and equal to less han 1.15 in idling?	ɜo to step **3.**	Go to step **4.**
CHECK REAR OXYGEN SENSOR SIGNAL. 1)Race the engine at speeds from idling to 5,000 rpm for a total of 5 cycles. NOTE: To increase engine speed to 5,000 rpm, slowly depress accelerator pedal, taking approximate-ly 5 seconds, and quickly release accelerator pedal to decrease engine speed. 2)Operate the LED operation mode for engine. NOTE: •Subaru Select Monitor For detailed operation procedure, refer to the "LED OPERATION MODE FOR ENGINE". <Ref. to EN(DOHC TURBO)-38, Subaru Select Monitor.>	)oes the LED of {Rear O2 ³ich Signal} blink?	³epair poor con-act in front oxygen A/F) sensor and ear oxygen sen-ɜor connector.	Check rear oxyger sensor circuit. <Ref. to FU(DOHC TURBO)-44, Rear Oxygen Sensor.>
CHECK EXHAUST SYSTEM. Check exhaust system parts. NOTE: Check the following items. •Loose installation of portions •Damage (crack, hole etc.) of parts •Looseness of front oxygen (A/F) sensor •Looseness and ill fitting of parts between front oxygen (A/F) sensor and rear oxygen sensor	s there a fault in exhaust sys-em?	³epair or replace aulty parts.	Replace the front oxygen (A/F) sen-sor. <Ref. to FU(DOHC TURBO)-42, Fron Oxygen (A/F) Sen sor.>

GETtheMANUALS.org

W: DTC P0133 — FRONT OXYGEN (A/F) SENSOR CIRCUIT SLOW RESPONSE

- **DTC DETECTING CONDITION:**
  - Two consecutive driving cycles with fault

CAUTION:
After repair or replacement of faulty parts, conduct Clear Memory Mode <Ref. to EN(DOHC TURBO)-49, OPERATION, Clear Memory Mode.> and Inspection Mode <Ref. to EN(DOHC TURBO)-46, Inspection Mode.>.

- **WIRING DIAGRAM:**

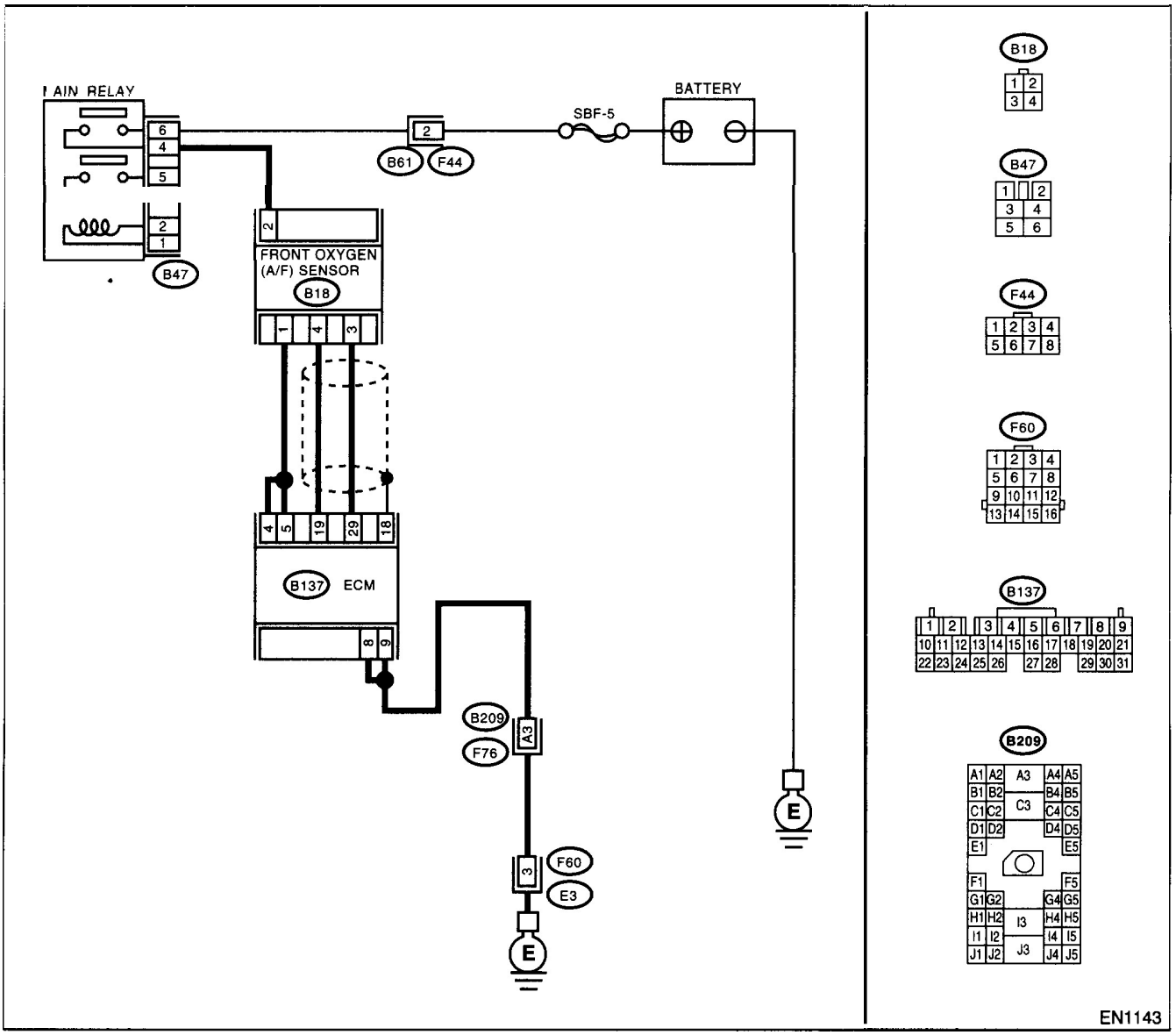

GETtheMANUALS.org

	Step	Check	Yes	No
1	**CHECK ANY OTHER DTC ON DISPLAY.**	Does the Subaru Select Monitor or OBD-II general scan tool indicate DTC P0031, P0032, P0131, P0132, P1130, P1131, P1134 or P1139?	Inspect DTC P0031, P0032, P0131, P0132, P1130, P1131, P1134 or P1139 using "List of Diagnostic Trouble Code (DTC)". <Ref. to EN(DOHC TURBO)-80, List of Diagnostic Trouble Code (DTC).> NOTE: In this case, it is not necessary to inspect DTC P0133.	Go to step **2.**
2	**CHECK EXHAUST SYSTEM.** NOTE: Check the following items. •Loose installation of front portion of exhaust pipe onto cylinder heads •Loose connection between front exhaust pipe and front catalytic converter •Damage of exhaust pipe resulting in a hole	Is there a fault in exhaust system?	Repair exhaust system.	Replace the front oxygen (A/F) sensor. <Ref. to FU(DOHC TURBO)-42, Front Oxygen (A/F) Sensor.>

GETtheMANUALS.org

X: DTC P0136 — REAR OXYGEN SENSOR CIRCUIT MALFUNCTION —

- **DTC DETECTING CONDITION:**
  - Two consecutive driving cycles with fault

CAUTION:
After repair or replacement of faulty parts, conduct Clear Memory Mode <Ref. to EN(DOHC TURBO)-49, OPERATION, Clear Memory Mode.> and Inspection Mode <Ref. to EN(DOHC TURBO)-46, Inspection Mode.>.

- **WIRING DIAGRAM:**

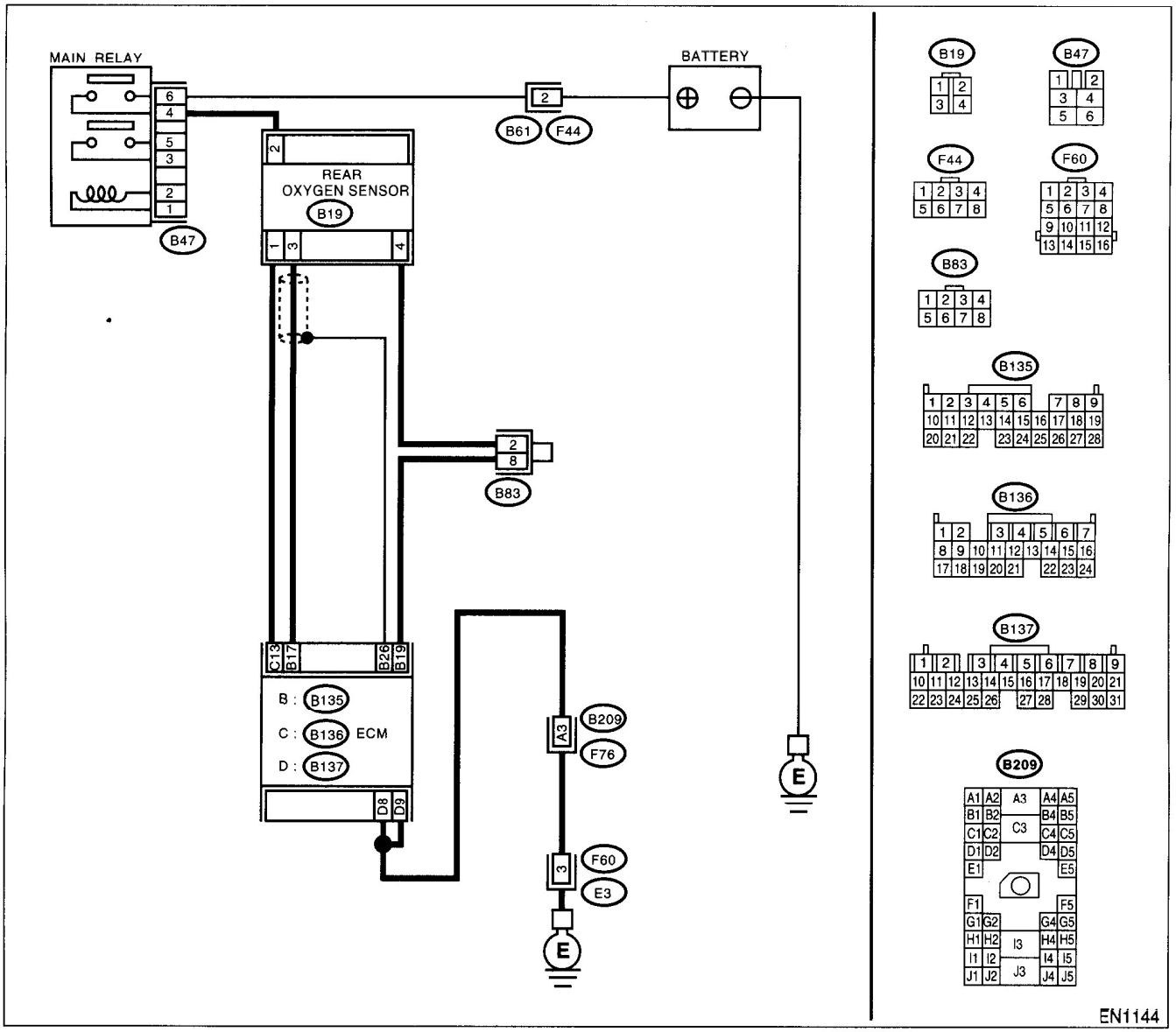

Step	Check	Yes	No
1 CHECK ANY OTHER DTC ON DISPLAY.	Does the Subaru Select Monitor or OBD-II general scan tool indicate DTC P0131 or P0132?	Go to step **2.**	Go to step **3.**

GETtheMANUALS.org

Step	Check	Yes	No
CHECK FAILURE CAUSE OF P0131 or P0132. Inspect DTC P0131 or P0132 using "List of Diagnostic Trouble Code (DTC)". <Ref. to EN(DOHC TURBO)-80, List of Diagnostic Trouble Code (DTC).>	s the failure cause of P0131 or '0132 in the fuel system?	Check fuel system. NOTE: n this case, it is ıot necessary to nspect DTC P0136.	Go to step **3.**
CHECK REAR OXYGEN SENSOR DATA. 1)Warm-up the engine until engine coolant temperature is above 70°C (158°F), and keep the engine speed at 2,000 rpm to 3,000 rpm for two minutes. 2)Read the data of rear oxygen sensor signal using Subaru Select Monitor or OBD-II general scan tool. NOTE: •Subaru Select Monitor For detailed operation procedure, refer to the "READ CURRENT DATA SHOWN ON DISPLAY FOR ENGINE". <Ref. to EN(DOHC TURBO)-38, Subaru Select Monitor.> •OBD-II general scan tool For detailed operation procedures, refer to the OBD-II General Scan Tool Instruction Manual.	)oes the value fluctuate?	Go to step **7.**	Go to step **4.**
CHECK REAR OXYGEN SENSOR DATA. Read the data of rear oxygen sensor signal using Subaru Select Monitor or OBD-II General Scan Tool.	s the value fixed between 0.2 ınd 0.4 V?	Go to step **5.**	Replace the rear ›xygen sensor. <Ref. to FU(DOHC TURBO)-44, Rear Oxygen Sensor.>
CHECK HARNESS BETWEEN ECM AND REAR OXYGEN SENSOR CONNECTOR. 1)Turn the ignition switch to OFF. 2)Disconnect the connectors from ECM and rear oxygen sensor. 3)Measure the resistance of harness between ECM and rear oxygen sensor connector. ***Connector & terminal*** ***(B135) No. 26 — (B19) No. 4:***	s the resistance more than 3 2?	Repair open circuit n harness ɔetween ECM and rear oxygen sensor connector.	Go to step **6.**
CHECK HARNESS BETWEEN REAR OXYGEN SENSOR AND ECM CONNECTOR. 1)Turn the ignition switch to OFF. 2)Disconnect the connector from rear oxygen sensor. 3)Turn the ignition switch to ON. 4)Measure voltage between rear oxygen sensor harness connector and engine ground or chassis ground. ***Connector & terminal*** ***(B19) No. 3 (+) — Engine ground (–):***	s the voltage more than 0.2 V?	Replace the rear oxygen sensor. <Ref. to FU(DOHC TURBO)-44, Rear Oxygen Sensor.>	Repair harness ınd connector. NOTE: n this case, repai he following: · Open circuit in ıarness between ear oxygen sensor and ECM connector · Poor contact in ear oxygen sensor connector · Poor contact in ECM connector
CHECK EXHAUST SYSTEM. Check exhaust system parts. NOTE: Check the following items. •Loose installation of portions •Damage (crack, hole etc.) of parts •Looseness and ill fitting of parts between front oxygen (A/F) sensor and rear oxygen sensor	s there a fault in exhaust system?	Repair or replace faulty parts.	Replace the rear oxygen sensor. <Ref. to FU(DOHC TURBO)-44, Rear Oxygen Sensor.>

GETtheMANUALS.org

Y: DTC P0139 — REAR OXYGEN SENSOR CIRCUIT SLOW RESPONSE —

- **DTC DETECTING CONDITION:**
  - Two consecutive driving cycles with fault

CAUTION:
After repair or replacement of faulty parts, conduct Clear Memory Mode <Ref. to EN(DOHC TURBO)-49, OPERATION, Clear Memory Mode.> and Inspection Mode <Ref. to EN(DOHC TURBO)-46, Inspection Mode.>.

- **WIRING DIAGRAM:**

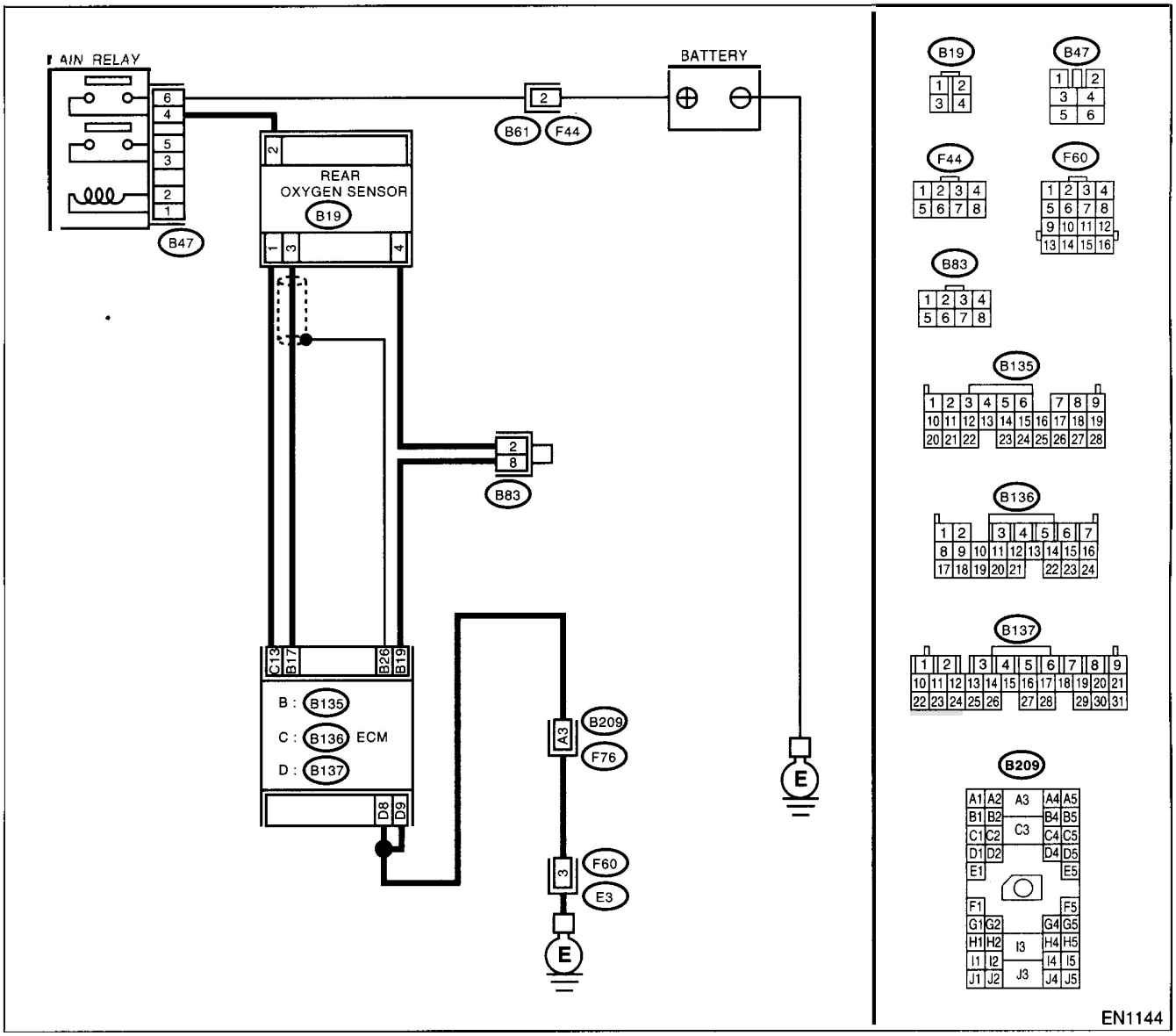

GETtheMANUALS.org

Step		Check	Yes	No
1	**CHECK ANY OTHER DTC ON DISPLAY.**	Does the Subaru Select Monitor or OBD-II general scan tool indicate DTC P0136?	Inspect DTC P0136 using "List of Diagnostic Trouble Code (DTC)". <Ref. to EN(DOHC TURBO)-80, List of Diagnostic Trouble Code (DTC).> NOTE: In this case, it is not necessary to inspect DTC P0139.	Replace the rear oxygen sensor. <Ref. to FU(DOHC TURBO)-44, Rear Oxygen Sensor.>

GETtheMANUALS.org

Z: DTC P0171 — FUEL TRIM MALFUNCTION (A/F TOO LEAN) —

NOTE:
For the diagnostic procedure, refer to DTC P0172. <Ref. to EN(DOHC TURBO)-153, DTC P0172 — FUEL TRIM MALFUNCTION (A/F TOO RICH) —, Diagnostic Procedure with Diagnostic Trouble Code (DTC).>

GETtheMANUALS.org

AA:DTC P0172 — FUEL TRIM MALFUNCTION (A/F TOO RICH) —

- **DTC DETECTING CONDITION:**
  - Two consecutive driving cycles with fault
- **TROUBLE SYMPTOM:**
  - Erroneous idling
  - Engine stalls.
  - Poor driving performance

CAUTION:
After repair or replacement of faulty parts, conduct Clear Memory Mode <Ref. to EN(DOHC TURBO)-49, OPERATION, Clear Memory Mode.> and Inspection Mode <Ref. to EN(DOHC TURBO)-46, Inspection Mode.>.

	Step	Check	Yes	No
1	**CHECK EXHAUST SYSTEM.**	Are there holes or loose bolts on exhaust system?	Repair exhaust system.	Go to step **2.**
2	**CHECK AIR INTAKE SYSTEM.**	Are there holes, loose bolts or disconnection of hose on air intake system?	Repair air intake system.	Go to step **3.**
3	**CHECK FUEL PRESSURE.** **Warning:** **•Place "NO FIRE" signs near the working area.** **•Be careful not to spill fuel on the floor.** 1)Release fuel pressure. (1) Disconnect the connector from fuel pump relay. (2) Start the engine and run it until it stalls. (3) After the engine stalls, crank it for five more seconds. (4) Turn the ignition switch to OFF. 2)Connect the connector to fuel pump relay. 3)Disconnect the fuel delivery hose from fuel filter, and connect fuel pressure gauge. 4)Install the fuel filler cap. 5)Start the engine and idle while gear position is neutral. 6)Measure the fuel pressure while disconnecting pressure regulator vacuum hose from intake manifold. **Warning:** **Before removing the fuel pressure gauge, release fuel pressure.** NOTE: If fuel pressure does not increase, squeeze fuel return hose 2 to 3 times, then measure fuel pressure again.	Is fuel pressure between 284 and 314 kPa (2.9 — 3.2 kg/cm^2, 41 — 46 psi)?	Go to step **4.**	Repair the following items. **Fuel pressure too high** • Clogged fuel return line or bent hose **Fuel pressure too low** • Improper fuel pump discharge • Clogged fuel supply line

GETtheMANUALS.org

	Step	Check	Yes	No
4	**CHECK FUEL PRESSURE.** After connecting the pressure regulator vacuum hose, measure fuel pressure. **Warning:** **Before removing the fuel pressure gauge, release fuel pressure.** NOTE: •If fuel pressure does not increase, squeeze fuel return hose 2 to 3 times, then measure fuel pressure again. •If out of specification as measured at this step, check or replace pressure regulator and pressure regulator vacuum hose.	Is fuel pressure between 206 and 235 kPa (2.1 — 2.4 kg/cm^2, 30 — 34 psi)?	Go to step **5.**	Repair the following items. **Fuel pressure too high** • Faulty pressure regulator • Clogged fuel return line or bent hose **Fuel pressure too low** • Faulty pressure regulator • Improper fuel pump discharge • Clogged fuel supply line
5	**CHECK ENGINE COOLANT TEMPERATURE SENSOR.** 1)Start the engine and warm-up completely. 2)Read the data of engine coolant temperature sensor signal using Subaru Select Monitor or OBD-II general scan tool. NOTE: •Subaru Select Monitor For detailed operation procedure, refer to the "READ CURRENT DATA FOR ENGINE". <Ref. to EN(DOHC TURBO)-38, Subaru Select Monitor.> •OBD-II general scan tool For detailed operation procedures, refer to the OBD-II General Scan Tool Instruction Manual.	Is temperature greater than 60°C (140°F)?	Go to step **6.**	Replace the engine coolant temperature sensor. <Ref. to FU(DOHC TURBO)-29, Engine Coolant Temperature Sensor.>
6	**CHECK PRESSURE SENSOR.** 1)Start the engine and warm-up engine until coolant temperature is greater than 60°C (140°F). 2)Place the shift lever in neutral position. 3)Turn the A/C switch to OFF. 4)Turn all accessory switches to OFF. 5)Read the data of pressure sensor signal using Subaru Select Monitor or OBD-II general scan tool. NOTE: •Subaru Select Monitor For detailed operation procedure, refer to the "READ CURRENT DATA FOR ENGINE". <Ref. to EN(DOHC TURBO)-38, Subaru Select Monitor.> •OBD-II general scan tool For detailed operation procedure, refer to the OBD-II General Scan Tool Instruction Manual. Specification: •Intake manifold absolute pressure ***Ignition ON*** ***73.3 — 106.6 kPa (550 — 800 mmHg, 21.65 — 31.50 inHg)*** ***Idling*** ***24.0 — 41.3 kPa (180 — 310 mmHg, 7.09 — 12.20 inHg)***	Is the value within the specifications?	Go to step **7.**	Replace the mass air flow and pressure sensor. <Ref. to FU(DOHC TURBO)-34, Mass Air Flow and Intake Air Temperature Sensor.>

GETtheMANUALS.org

	Step	Check	Yes	No
7	**CHECK INTAKE AIR TEMPERATURE SENSOR.** 1)Start the engine and warm-up engine until coolant temperature is greater than 60°C (140°F). 2)Place the shift lever in neutral position. 3)Turn the A/C switch to OFF. 4)Turn all accessory switches to OFF. 5)Open the front hood. 6)Measure the ambient temperature. 7)Read the data of pressure sensor signal using Subaru Select Monitor or OBD-II general scan tool. NOTE: •Subaru Select Monitor For detailed operation procedure, refer to the "READ CURRENT DATA FOR ENGINE". <Ref. to EN(DOHC TURBO)-38, Subaru Select Monitor.> •OBD-II general scan tool For detailed operation procedure, refer to the OBD-II General Scan Tool Instruction Manual.	Is value obtained when ambient temperature is subtracted from intake air temperature greater than −10°C (14°F) and less than 50°C (122°F)?	Contact with SOA (distributor) service. NOTE: Inspection by DTM is required, because probable cause is deterioration of multiple parts.	Check mass air flow and intake air temperature sensor. <Ref. to FU(DOHC TURBO)-34, Mass Air Flow and Intake Air Temperature Sensor.>

GET theMANUALS.org

AB:DTC P0181 — FUEL TEMPERATURE SENSOR A CIRCUIT RANGE/PERFORMANCE PROBLEM —

- **DTC DETECTING CONDITION:**
  - Two consecutive driving cycles with fault

CAUTION:
After repair or replacement of faulty parts, conduct Clear Memory Mode <Ref. to EN(DOHC TURBO)-49, OPERATION, Clear Memory Mode.> and Inspection Mode <Ref. to EN(DOHC TURBO)-46, Inspection Mode.>.

- **WIRING DIAGRAM:**

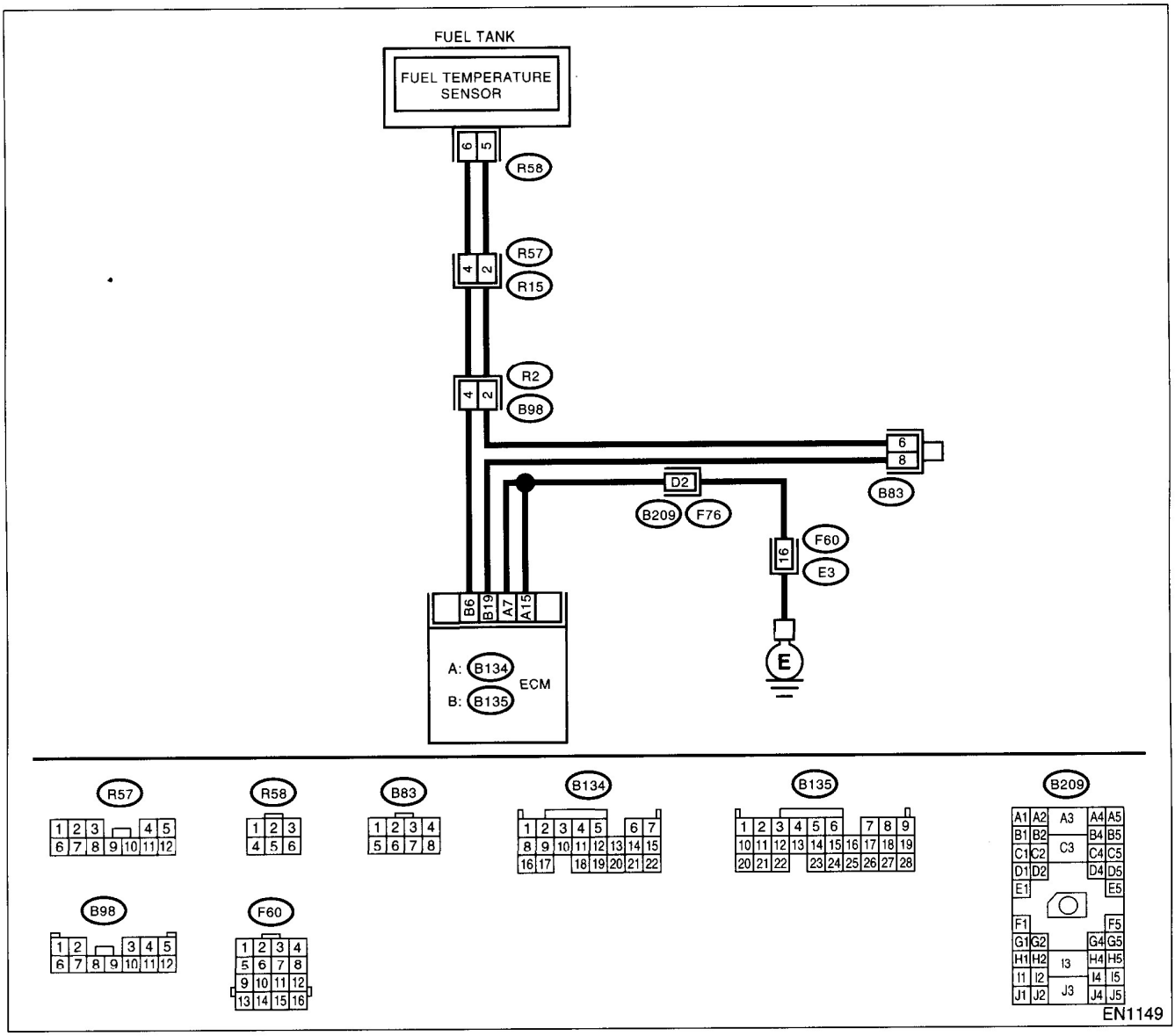

GETtheMANUALS.org

	Step	Check	Yes	No
1	**CHECK ANY OTHER DTC ON DISPLAY.**	Does the Subaru Select Monitor or OBD-II general scan tool indicate DTC P0182 or P0183?	Inspect DTC P0182 or P0183 using "List of Diagnostic Trouble Code (DTC)". <Ref. to EN(DOHC TURBO)-80, List of Diagnostic Trouble Code (DTC).> NOTE: In this case, it is not necessary to inspect DTC P0181.	Replace the fuel temperature sensor. <Ref. to EC(DOHC TURBO)-9, Fuel Temperature Sensor.>

GETtheMANUALS.org

AC:DTC P0182 — FUEL TEMPERATURE SENSOR A CIRCUIT LOW INPUT —

- **DTC DETECTING CONDITION:**
  - Immediately at fault recognition

CAUTION:
After repair or replacement of faulty parts, conduct Clear Memory Mode <Ref. to EN(DOHC TURBO)-49, OPERATION, Clear Memory Mode.> and Inspection Mode <Ref. to EN(DOHC TURBO)-46, Inspection Mode.>.

- **WIRING DIAGRAM:**

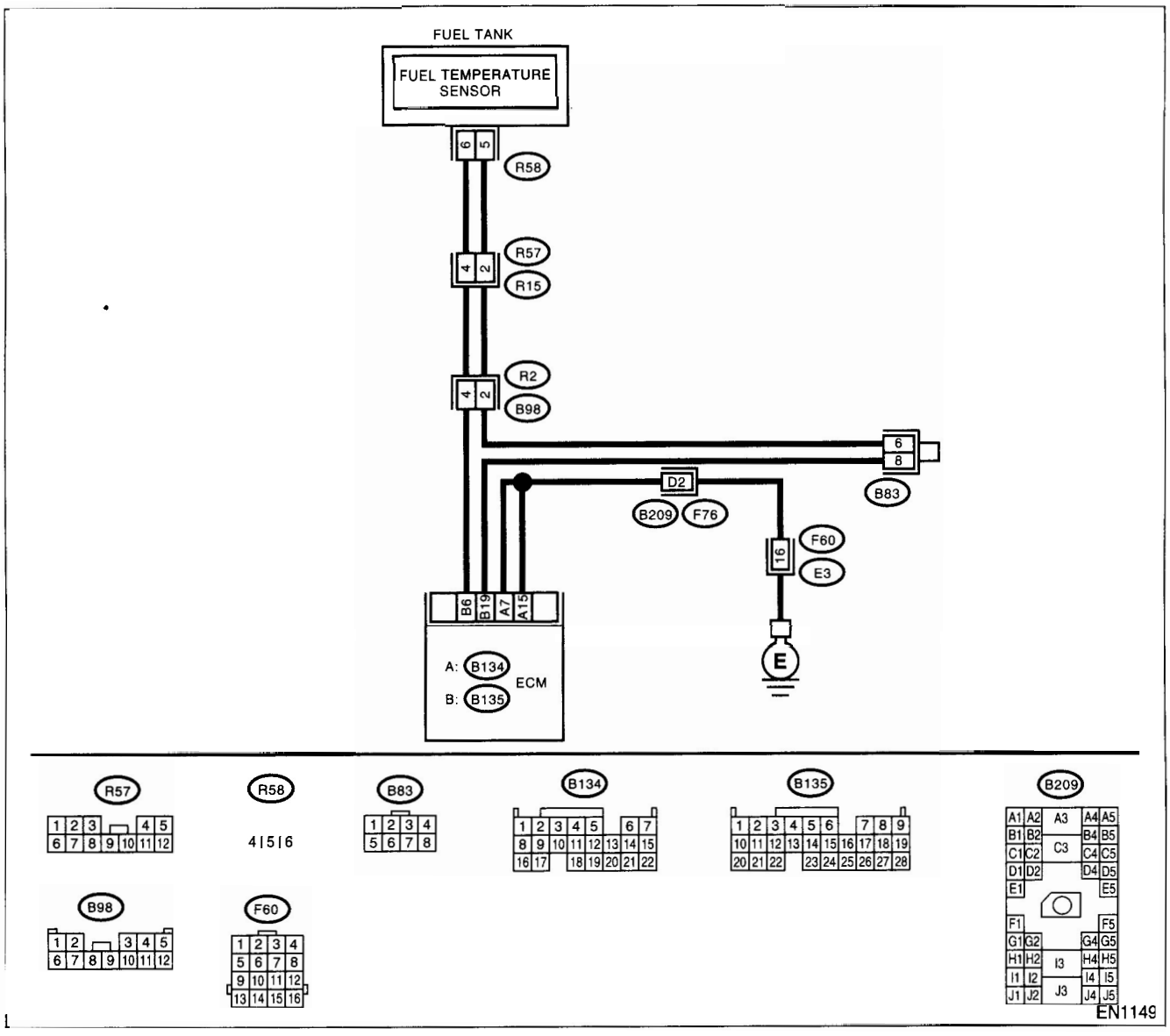

GETtheMANUALS.org

	Step	Check	Yes	No
1	**CHECK CURRENT DATA.** 1)Start the engine. 2)Read the data of fuel temperature sensor signal using Subaru Select Monitor or OBD-II general scan tool. NOTE: •Subaru Select Monitor For detailed operation procedure, refer to the "READ CURRENT DATA FOR ENGINE". <Ref. to EN(DOHC TURBO)-38, Subaru Select Monitor.> •OBD-II general scan tool For detailed operation procedures, refer to the OBD-II General Scan Tool Instruction Manual.	Is the value greater than 120°C (248°F)?	Go to step **2.**	Even if MIL lights up, the circuit has returned to a normal condition at this time.
2	**CHECK CURRENT DATA.** 1)Turn the ignition switch to OFF. 2)Remove the access hole lid. 3)Disconnect the connector from fuel pump. 4)Turn the ignition switch to ON. 5)Read the data of fuel temperature sensor signal using Subaru Select Monitor or the OBD-II general scan tool. NOTE: •Subaru Select Monitor For detailed operation procedure, refer to the "READ CURRENT DATA FOR ENGINE". <Ref. to EN(DOHC TURBO)-38, Subaru Select Monitor.> •OBD-II general scan tool For detailed operation procedures, refer to the OBD-II General Scan Tool Instruction Manual.	Is the value less than –40°C (–40°F)?	Replace the fuel temperature sensor. <Ref. to EC(DOHC TURBO)-9, Fuel Temperature Sensor.>	Repair ground short circuit in harness between fuel pump and ECM connector.

GETtheMANUALS.org

AD:DTC P0183 — FUEL TEMPERATURE SENSOR A CIRCUIT HIGH INPUT —

- **DTC DETECTING CONDITION:**
  - Immediately at fault recognition

CAUTION:
After repair or replacement of faulty parts, conduct Clear Memory Mode <Ref. to EN(DOHC TURBO)-49, OPERATION, Clear Memory Mode.> and Inspection Mode <Ref. to EN(DOHC TURBO)-46, Inspection Mode.>.

- **WIRING DIAGRAM:**

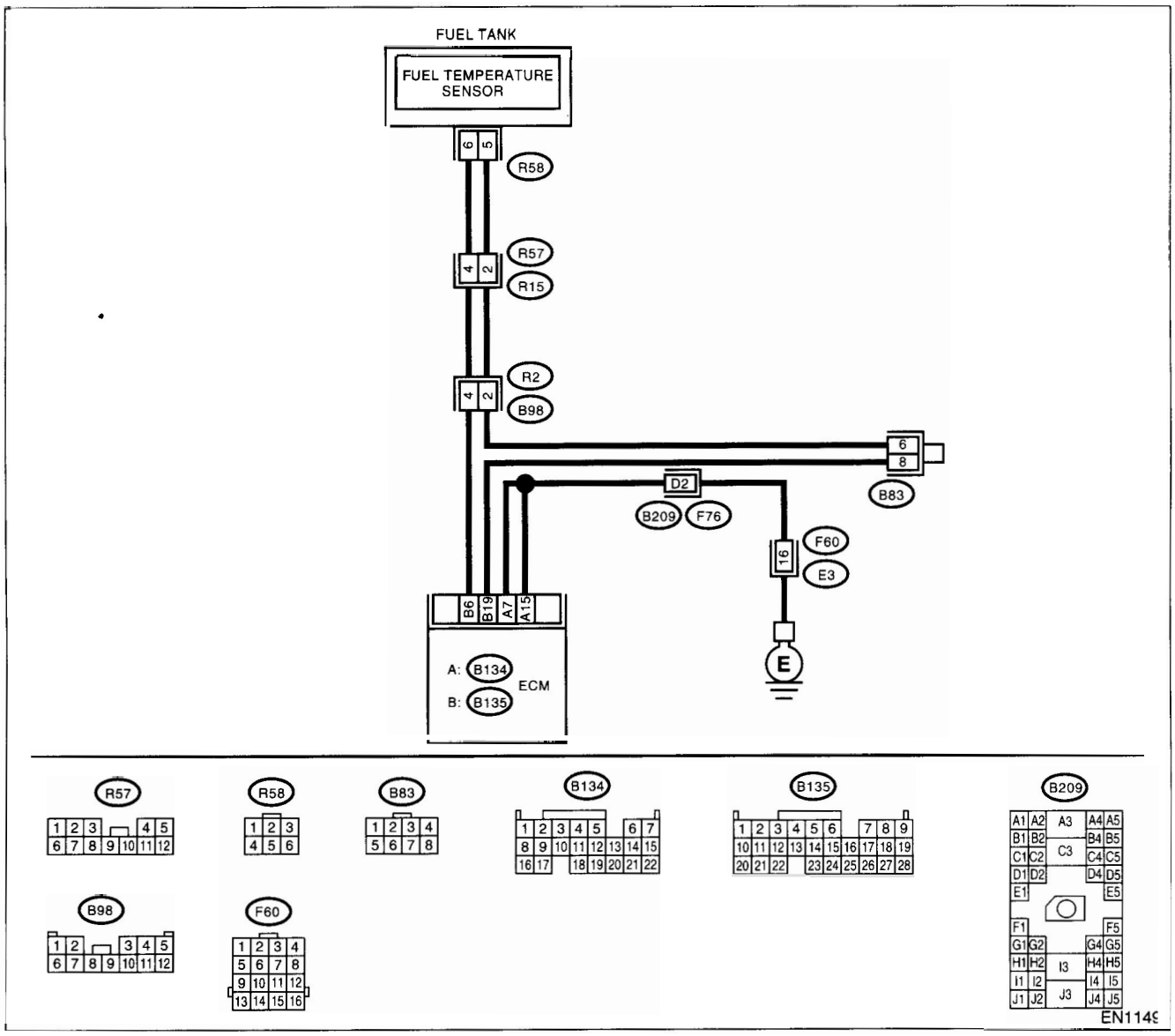

GETtheMANUALS.org

	Step	Check	Yes	No
1	**CHECK CURRENT DATA.** 1)Start the engine. 2)Read the data of fuel temperature sensor signal using Subaru Select Monitor or OBD-II general scan tool. NOTE: •Subaru Select Monitor For detailed operation procedure, refer to the "READ CURRENT DATA FOR ENGINE". <Ref. to EN(DOHC TURBO)-38, Subaru Select Monitor.> •OBD-II general scan tool For detailed operation procedures, refer to the OBD-II General Scan Tool Instruction Manual.	Is the value less than −40°C (−40°F)?	Go to step **2.**	Repair poor contact. NOTE: In this case, repair the following: • Poor contact in fuel pump connector • Poor contact in ECM connector • Poor contact in coupling connectors • Poor contact in joint connector
2	**CHECK HARNESS BETWEEN FUEL TEMPERATURE SENSOR AND ECM CONNECTOR.** 1)Turn the ignition switch to OFF. 2)Remove the access hole lid. 3)Disconnect the connector from fuel pump. 4)Measure the voltage between fuel pump connector and chassis ground. ***Connector & terminal*** ***(R58) No. 5 (+) — Chassis ground (−):***	Is the voltage more than 10 V?	Repair battery short circuit in harness between ECM and fuel pump connector.	Go to step **3.**
3	**CHECK HARNESS BETWEEN FUEL TEMPERATURE SENSOR AND ECM CONNECTOR.** 1)Turn the ignition switch to ON. 2)Measure the voltage between fuel pump connector and chassis ground. ***Connector & terminal*** ***(R58) No. 5 (+) — Chassis ground (−):***	Is the voltage more than 10 V?	Repair battery short circuit in harness between ECM and fuel pump connector.	Go to step **4.**
4	**CHECK HARNESS BETWEEN FUEL TEMPERATURE SENSOR AND ECM CONNECTOR.** Measure the voltage between fuel pump connector and chassis ground. ***Connector & terminal*** ***(R58) No. 5 (+) — Chassis ground (−):***	Is the voltage more than 4 V?	Go to step **5.**	Repair harness and connector. NOTE: In this case, repair the following: • Open circuit in harness between ECM and fuel pump connector • Poor contact in fuel pump connector • Poor contact in ECM connector • Poor contact in coupling connectors

GETtheMANUALS.org

	Step	Check	Yes	No
5	**CHECK HARNESS BETWEEN FUEL TEMPERATURE SENSOR AND ECM CONNECTOR.** 1)Turn the ignition switch to OFF. 2)Measure the resistance of harness between fuel pump connector and chassis ground. ***Connector & terminal*** ***(R58) No. 4 — Chassis ground:***	Is the resistance less than 5 Ω?	Replace the fuel temperature sensor. <Ref. to EC(DOHC TURBO)-9, Fuel Temperature Sensor.>	Repair harness and connector. NOTE: In this case, repair the following: • Open circuit in harness between ECM and fuel pump connector • Poor contact in fuel pump connector • Poor contact in ECM connector • Poor contact in coupling connectors • Poor contact in joint connector

GETtheMANUALS.org

GETtheMANUALS.org

AE:DTC P0244 — WASTEGATE CONTROL SOLENOID VALVE MALFUNCTION (HIGH INPUT) —

- **DTC DETECTING CONDITION:**
  - Two consecutive driving cycles with fault
- **TROUBLE SYMPTOM:**
  - Erroneous idling
  - Engine stalls.
  - Poor driving performance

CAUTION:
After repair or replacement of faulty parts, conduct Clear Memory Mode <Ref. to EN(DOHC TURBO)-49, OPERATION, Clear Memory Mode.> and Inspection Mode <Ref. to EN(DOHC TURBO)-46, Inspection Mode.>.

- **WIRING DIAGRAM:**

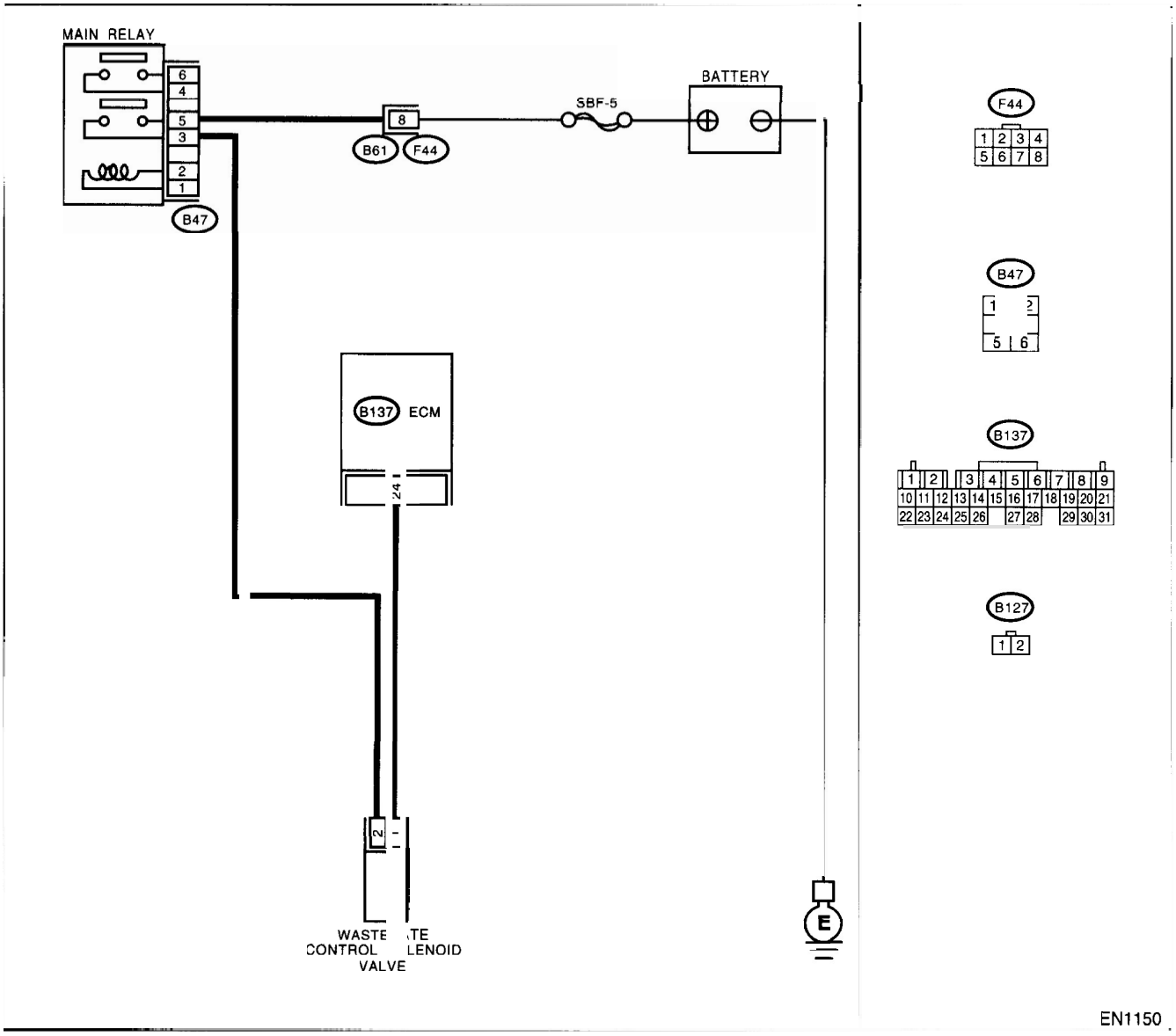

GETtheMANUALS.org

	Step	Check	Yes	No
1	**CHECK ANY OTHER DTC ON DISPLAY.**	Does the Subaru Select Monitor or OBD-II general scan tool indicate DTC P0245 or P0246?	Inspect DTC P0245 or P0246 using "List of Diagnostic Trouble Code (DTC)". <Ref. to EN(DOHC TURBO)-80, List of Diagnostic Trouble Code (DTC).> NOTE: In this case, it is not necessary to inspect DTC P0244.	Replace the wastegate control solenoid valve. <Ref. to FU(DOHC TURBO)-41, Wastegate Control Solenoid Valve.>

GETtheMANUALS.org

AF:DTC P0245 — WASTEGATE CONTROL SOLENOID VALVE CIRCUIT LOW INPUT —

- **DTC DETECTING CONDITION:**
  - Immediately at fault recognition
- **TROUBLE SYMPTOM:**
  - Erroneous idling

CAUTION:
After repair or replacement of faulty parts, conduct Clear Memory Mode <Ref. to EN(DOHC TURBO)-49, OPERATION, Clear Memory Mode.> and Inspection Mode <Ref. to EN(DOHC TURBO)-46, Inspection Mode.>.

- **WIRING DIAGRAM:**

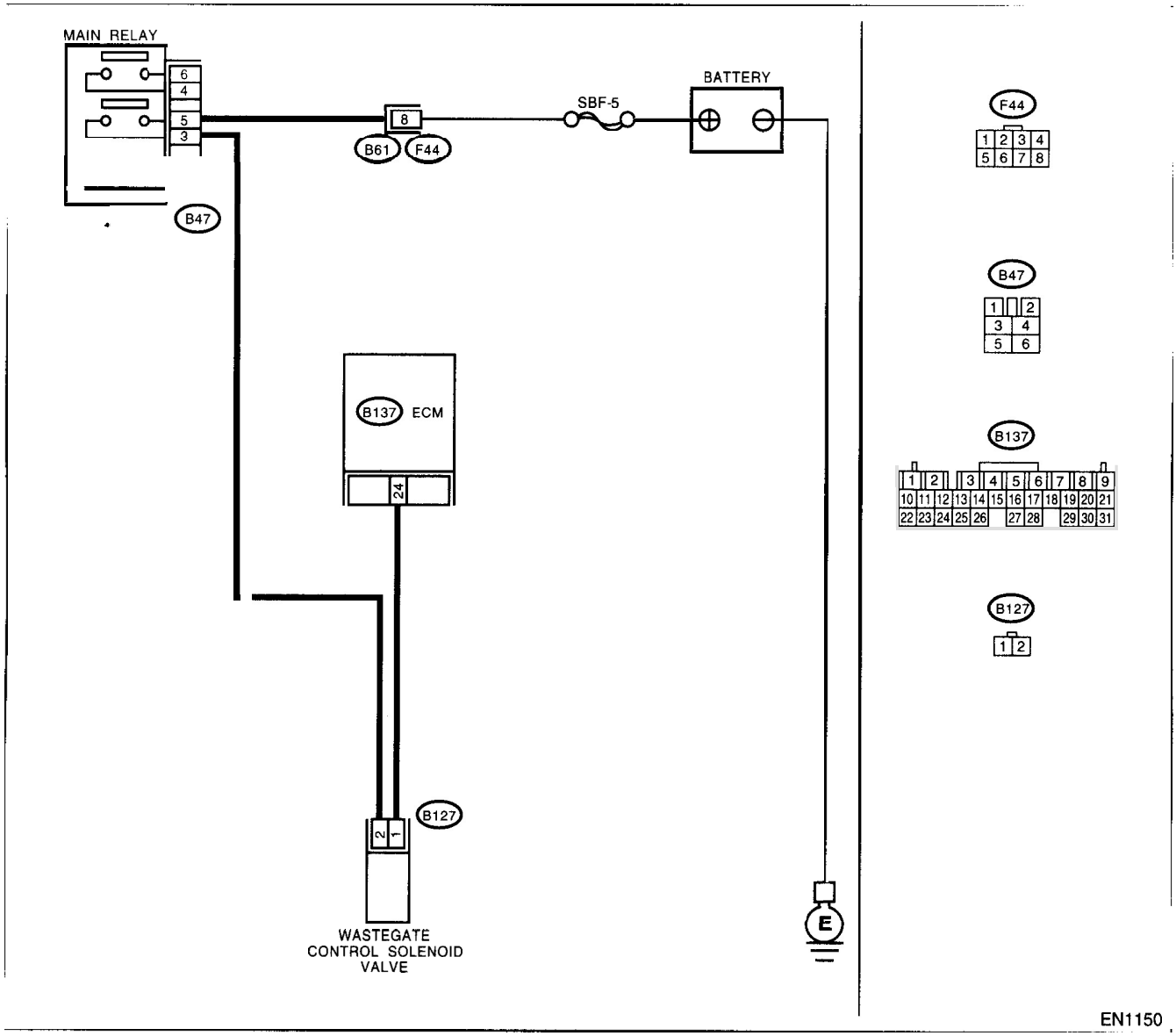

EN1150

GETtheMANUALS.org

	Step	Check	Yes	No
1	**CHECK OUTPUT SIGNAL FROM ECM.** 1)Turn the ignition switch to ON. 2)Measure the voltage between ECM and chassis ground. ***Connector & terminal*** ***(B137) No. 24 (+) — Chassis ground (–):***	Is the voltage more than 10 V?	Even if MIL lights up, the circuit has returned to a normal condition at this time. Contact with SOA (distributor) service. NOTE: Inspection by DTM is required, because probable cause is deterioration of multiple parts.	Go to step **2.**
2	**CHECK HARNESS BETWEEN WASTEGATE CONTROL SOLENOID VALVE AND ECM CONNECTOR.** 1)Turn the ignition switch to OFF. 2)Disconnect the connectors from wastegate control solenoid valve and ECM. 3)Measure the resistance of harness between wastegate control solenoid valve connector and engine ground. ***Connector & terminal*** ***(B127) No. 1 — Engine ground:***	Is the resistance less than 10 Ω?	Repair ground short circuit in harness between ECM and wastegate control solenoid valve connector.	Go to step **3.**
3	**CHECK HARNESS BETWEEN WASTEGATE CONTROL SOLENOID VALVE AND ECM CONNECTOR.** Measure the resistance of harness between ECM and wastegate control solenoid valve of harness connector. ***Connector & terminal*** ***(B137) No. 24 — (B127) No. 1:***	Is the resistance less than 1 Ω?	Go to step **4.**	Repair open circuit in harness between ECM and wastegate control solenoid valve connector. NOTE: In this case, repair the following: • Open circuit in harness between ECM and wastegate control solenoid valve connector
4	**CHECK WASTEGATE CONTROL SOLENOID VALVE.** 1)Remove the purge control solenoid valve. 2)Measure the resistance between purge control solenoid valve terminals. ***Terminals*** ***No. 1 — No. 2:***	Is the resistance between 30 and 34 Ω?	Go to step **5.**	Replace the wastegate control solenoid valve. <Ref. to FU(DOHC TURBO)-41, Wastegate Control Solenoid Valve.>
5	**CHECK POWER SUPPLY TO WASTEGATE CONTROL SOLENOID VALVE.** 1)Turn the ignition switch to ON. 2)Measure the voltage between wastegate control solenoid valve and engine ground. ***Connector & terminal*** ***(B127) No. 2 (+) — Engine ground (–):***	Is the voltage more than 10 V?	Go to step **6.**	Repair open circuit in harness between main relay and wastegate control solenoid valve connector.

GETtheMANUALS.org

	Step	Check	Yes	No
6	**CHECK POOR CONTACT.** Check poor contact in wastegate control solenoid valve connector.	Is there poor contact in wastegate control solenoid valve connector?	Repair poor contact in wastegate control solenoid valve connector.	Contact with SOA (distributor) service. NOTE: Inspection by DTM is required, because probable cause is deterioration of multiple parts.

GETtheMANUALS.org

GETtheMANUALS.org

AG:DTC P0246 — WASTEGATE CONTROL SOLENOID VALVE CIRCUIT HIGH INPUT —

- **DTC DETECTING CONDITION:**
  - Immediately at fault recognition
- **TROUBLE SYMPTOM:**
  - Erroneous idling

CAUTION:
After repair or replacement of faulty parts, conduct Clear Memory Mode <Ref. to EN(DOHC TURBO)-49, OPERATION, Clear Memory Mode.> and Inspection Mode <Ref. to EN(DOHC TURBO)-46, Inspection Mode.>.

- **WIRING DIAGRAM:**

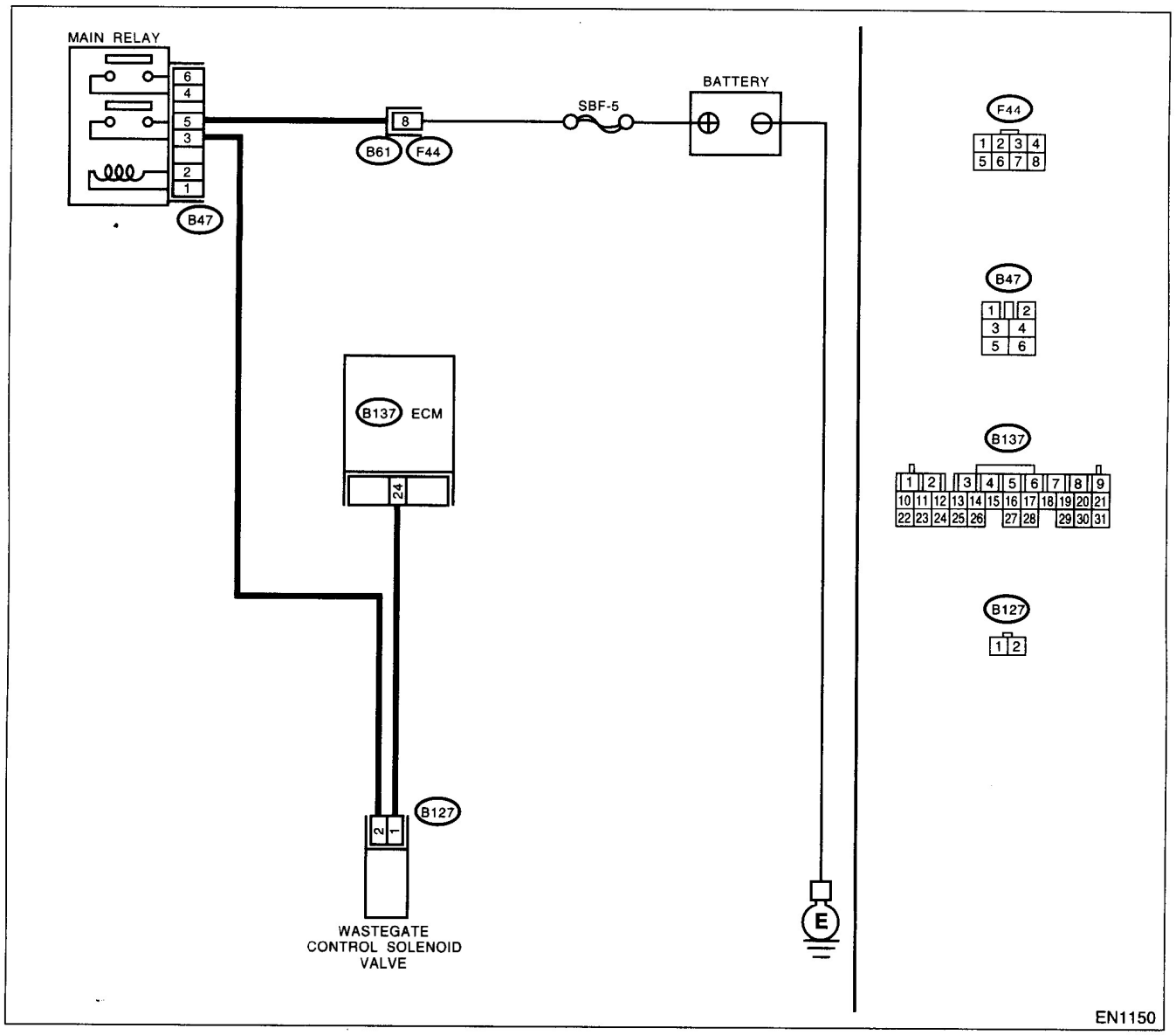

GETtheMANUALS.org

	Step	Check	Yes	No
1	**CHECK OUTPUT SIGNAL FROM ECM.** 1)Turn the ignition switch to ON. 2)Measure the voltage between ECM and chassis ground. ***Connector & terminal*** ***(B137) No. 24 (+) — Chassis ground (–):***	Is the voltage more than 10 V?	Go to step **3.**	Go to step **2.**
2	**CHECK POOR CONTACT.** Check poor contact in ECM connector.	Is there poor contact in ECM connector?	Repair poor contact in ECM connector.	Replace the ECM. <Ref. to FU(DOHC TURBO)-47, Engine Control Module.>
3	**CHECK HARNESS BETWEEN WASTEGATE CONTROL SOLENOID VALVE AND ECM CONNECTOR.** 1)Turn the ignition switch to OFF. 2)Disconnect the connector from wastegate control solenoid valve. 3)Turn the ignition switch to ON. 4)Measure the voltage between ECM and chassis ground. ***Connector & terminal*** ***(B137) No. 24 (+) — Chassis ground (–):***	Is the voltage more than 10 V?	Repair battery short circuit in harness between ECM and wastegate control solenoid valve connector. After repair, replace the ECM. <Ref. to FU(DOHC TURBO)-47, Engine Control Module.>	Go to step **4.**
4	**CHECK WASTEGATE CONTROL SOLENOID VALVE.** 1)Turn the ignition switch to OFF. 2)Measure the resistance between wastegate control solenoid valve terminals. ***Terminals*** ***No. 1 — No. 2:***	Is the resistance less than 1 Ω?	Replace the wastegate control solenoid valve <Ref. to FU(DOHC TURBO)-41, Wastegate Control Solenoid Valve.> and ECM <Ref. to FU(DOHC TURBO)-47, Engine Control Module.>	Go to step **5.**
5	**CHECK POOR CONTACT.** Check poor contact in ECM connector.	Is there poor contact in ECM connector?	Repair poor contact in ECM connector.	Replace the ECM. <Ref. to FU(DOHC TURBO)-47, Engine Control Module.>

GETtheMANUALS.org

AH:DTC P0301 — CYLINDER 1 MISFIRE DETECTED —

NOTE:
For the diagnostic procedure, refer to DTC P0304. <Ref. to EN(DOHC TURBO)-173, DTC P0304 — CYLINDER 4 MISFIRE DETECTED —, Diagnostic Procedure with Diagnostic Trouble Code (DTC).>

AI: DTC P0302 — CYLINDER 2 MISFIRE DETECTED —

NOTE:
For the diagnostic procedure, refer to DTC P0304. <Ref. to EN(DOHC TURBO)-173, DTC P0304 — CYLINDER 4 MISFIRE DETECTED —, Diagnostic Procedure with Diagnostic Trouble Code (DTC).>

AJ:DTC P0303 — CYLINDER 3 MISFIRE DETECTED —

NOTE:
For the diagnostic procedure, refer to DTC P0304. <Ref. to EN(DOHC TURBO)-173, DTC P0304 — CYLINDER 4 MISFIRE DETECTED —, Diagnostic Procedure with Diagnostic Trouble Code (DTC).>

GETtheMANUALS.org

AK:DTC P0304 — CYLINDER 4 MISFIRE DETECTED —

- **DTC DETECTING CONDITION:**
  - Two consecutive driving cycles with fault
  - Immediately at fault recognition (A misfire which could damage catalyst occurs.)
- **TROUBLE SYMPTOM:**
  - Engine stalls.
  - Erroneous idling
  - Rough driving

CAUTION:
After repair or replacement of faulty parts, conduct Clear Memory Mode <Ref. to EN(DOHC TURBO)-49, OPERATION, Clear Memory Mode.> and Inspection Mode <Ref. to EN(DOHC TURBO)-46, Inspection Mode.>.

GETtheMANUALS.org

- **WIRING DIAGRAM:**

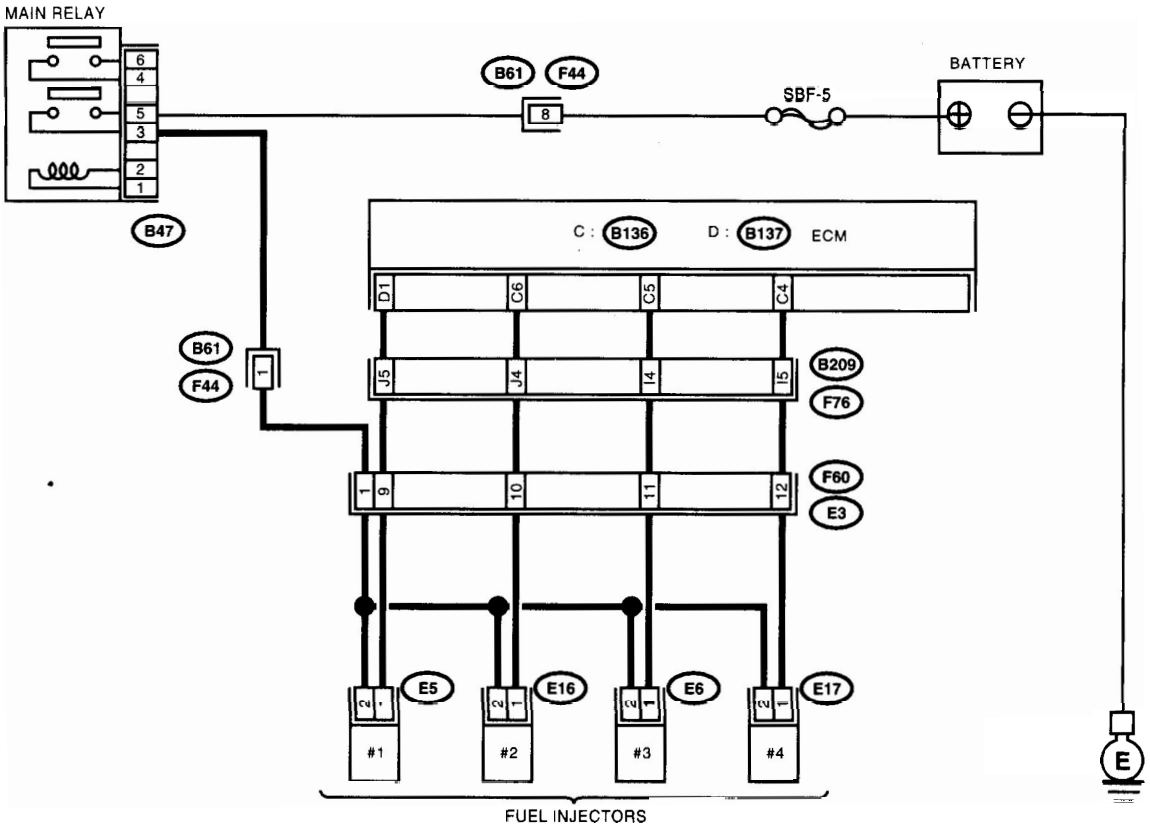

EN1142

GETtheMANUALS.org

	Step	Check	Yes	No
1	**CHECK ANY OTHER DTC ON DISPLAY.**	Does the Subaru Select Monitor or OBD-II general scan tool indicate DTC P0106, P0107, P0108, P0117, P0118 or P0125?	Inspect DTC P0106, P0107, P0108, P0117, P0118 or P0125 using "List of Diagnostic Trouble Code (DTC)". <Ref. to EN(DOHC TURBO)-80, List of Diagnostic Trouble Code (DTC).> NOTE: In this case, it is not necessary to inspect DTC P0301, P0302, P0303 and P0304.	Go to step **2.**
2	**CHECK OUTPUT SIGNAL FROM ECM.** 1)Turn the ignition switch to ON. 2)Measure the voltage between ECM connector and chassis ground on faulty cylinders. ***Connector & terminal*** ***#1 (B137) No. 1 (+) — Chassis ground (–):*** ***#2 (B136) No. 6 (+) — Chassis ground (–):*** ***#3 (B136) No. 5 (+) — Chassis ground (–):*** ***#4 (B136) No. 4 (+) — Chassis ground (–):***	Is the voltage more than 10 V?	Go to step **7.**	Go to step **3.**
3	**CHECK HARNESS BETWEEN FUEL INJECTOR AND ECM CONNECTOR.** 1)Turn the ignition switch to OFF. 2)Disconnect the connector from fuel injector on faulty cylinders. 3)Disconnect the connector from ECM. 4)Measure the voltage between ECM connector and engine ground on faulty cylinders. ***Connector & terminal*** ***#1 (E5) No. 1 (+) — Engine ground (–):*** ***#2 (E16) No. 1 (+) — Engine ground (–):*** ***#3 (E6) No. 1 (+) — Engine ground (–):*** ***#4 (E17) No. 1 (+) — Engine ground (–):***	Is the resistance less than 10 Ω?	Repair ground short circuit in harness between fuel injector and ECM connector.	Go to step **4.**
4	**CHECK HARNESS BETWEEN FUEL INJECTOR AND ECM CONNECTOR.** Measure the resistance of harness connector between ECM connector and fuel injector on faulty cylinders. ***Connector & terminal*** ***#1 (B137) No. 1 — (E5) No. 1:*** ***#2 (B136) No. 6 — (E16) No. 1:*** ***#3 (B136) No. 5 — (E6) No. 1:*** ***#4 (B136) No. 4 — (E17) No. 1:***	Is the resistance less than 1 Ω?	Go to step **5.**	Repair harness and connector. NOTE: In this case, repair the following: • Open circuit in harness between ECM and fuel injector connector • Poor contact in coupling connector
5	**CHECK FUEL INJECTOR.** Measure the resistance between fuel injector terminals on faulty cylinder. ***Terminals*** ***No. 1 — No. 2:***	Is the resistance between 5 and 20 Ω?	Go to step **6.**	Replace the faulty fuel injector. <Ref. to FU(DOHC TURBO)-37, Fuel Injector.>

GETtheMANUALS.org

	Step	Check	Yes	No
6	**CHECK POWER SUPPLY LINE.** 1)Turn the ignition switch to ON. 2)Measure the voltage between fuel injector and engine ground on faulty cylinders. ***Connector & terminal*** ***#1 (E5) No. 2 (+) — Engine ground (–):*** ***#2 (E16) No. 2 (+) — Engine ground (–):*** ***#3 (E6) No. 2 (+) — Engine ground (–):*** ***#4 (E17) No. 2 (+) — Engine ground (–):***	Is the voltage more than 10 V?	Repair poor contact in all connectors in fuel injector circuit.	Repair harness and connector. NOTE: In this case, repair the following: • Open circuit in harness between main relay and fuel injector connector on faulty cylinders • Poor contact in coupling connector • Poor contact in main relay connector • Poor contact in fuel injector connector on faulty cylinders
7	**CHECK HARNESS BETWEEN FUEL INJECTOR AND ECM CONNECTOR.** 1)Turn the ignition switch to OFF. 2)Disconnect the connector from fuel injector on faulty cylinder. 3)Turn the ignition switch to ON. 4)Measure the voltage between ECM connector and chassis ground on faulty cylinders. ***Connector & terminal*** ***#1 (B137) No. 1 (+) — Chassis ground (–):*** ***#2 (B136) No. 6 (+) — Chassis ground (–):*** ***#3 (B136) No. 5 (+) — Chassis ground (–):*** ***#4 (B136) No. 4 (+) — Chassis ground (–):***	Is the voltage more than 10 V?	Repair battery short circuit in harness between ECM and fuel injector. After repair, replace the ECM. <Ref. to FU(DOHC TURBO)-47, Engine Control Module.>	Go to step **8.**
8	**CHECK FUEL INJECTOR.** 1)Turn the ignition switch to OFF. 2)Measure the resistance between fuel injector terminals on faulty cylinder. ***Terminals*** ***No. 1 — No. 2:***	Is the resistance less than 1 Ω?	Replace the faulty fuel injector <Ref. to FU(DOHC TURBO)-37, Fuel Injector.> and ECM <Ref. to FU(DOHC TURBO)-47, Engine Control Module.>	Go to step **9.**
9	**CHECK INSTALLATION OF CAMSHAFT POSITION SENSOR/CRANKSHAFT POSITION SENSOR.**	Is the camshaft position sensor or crankshaft position sensor loosely installed?	Tighten camshaft position sensor or crankshaft position sensor.	Go to step **10.**
10	**CHECK CRANKSHAFT SPROCKET.** Remove the timing belt cover.	Is the crankshaft sprocket rusted or does it have broken teeth?	Replace the crankshaft sprocket. <Ref. to ME(DOHC TURBO)-58, Crankshaft Sprocket.>	Go to step **11.**

GETtheMANUALS.org

	Step	Check	Yes	No
11	**CHECK INSTALLATION CONDITION OF TIMING BELT.** Turn the crankshaft using ST, and align alignment mark on crankshaft sprocket with alignment mark on cylinder block. ST 499987500 CRANKSHAFT SOCKET	Is the timing belt dislocated from its proper position?	Repair installation condition of timing belt. <Ref. to ME(DOHC TURBO)-48, Timing Belt Assembly.>	Go to step **12.**
12	**CHECK FUEL LEVEL.**	Is the fuel meter indication higher than the "Lower" level?	Go to step **13.**	Replenish fuel so fuel meter indication is higher than the "Lower" level. After replenishing fuel, Go to step **13.**
13	**CHECK STATUS OF CHECK ENGINE MALFUNCTION INDICATOR LAMP (MIL).** 1)Clear the memory using Subaru Select Monitor. <Ref. to EN(DOHC TURBO)-49, Clear Memory Mode.> 2)Start the engine, and drive the vehicle more than 10 minutes.	Is the MIL coming on or blinking?	Go to step **15.**	Go to step **14.**
14	**CHECK CAUSE OF MISFIRE DIAGNOSED.**	Was the cause of misfire diagnosed when the engine is running?	Finish diagnostics operation, if the engine has no abnormality. NOTE: Ex. Remove the spark plug cord, etc.	Repair poor contact. NOTE: In this case, repair the following: • Poor contact in ignitor connector • Poor contact in ignition coil connector • Poor contact in fuel injector connector on faulty cylinders • Poor contact in ECM connector • Poor contact in coupling connector
15	**CHECK AIR INTAKE SYSTEM.**	Is there a fault in air intake system?	Repair air intake system. NOTE: Check the following items: • Are there air leaks or air suction caused by loose or dislocated nuts and bolts? • Are there cracks or any disconnection of hoses?	Go to step **16.**

GETtheMANUALS.org

	Step	Check	Yes	No
16	**CHECK MISFIRE SYMPTOM.** 1)Turn the ignition switch to ON. 2)Read the diagnostic trouble code (DTC). •Subaru Select Monitor <Ref. to EN(DOHC TURBO)-38, Subaru Select Monitor.> •OBD-II general scan tool For detailed operation procedures, refer to the OBD-II General Scan Tool Operation Manual. NOTE: Perform diagnosis according to the items listed below.	Does the Subaru Select Monitor or OBD-II general scan tool indicate only one DTC?	Go to step **21.**	Go to step **17.**
17	**CHECK DIAGNOSTIC TROUBLE CODE (DTC) ON DISPLAY.**	Does the Subaru Select Monitor or OBD-II general scan tool indicate DTC P0301 and P0302?	Go to step **22.**	Go to step **18.**
18	**CHECK DIAGNOSTIC TROUBLE CODE (DTC) ON DISPLAY.**	Does the Subaru Select Monitor or OBD-II general scan tool indicate DTC P0303 and P0304?	Go to step **23.**	Go to step **19.**
19	**CHECK DIAGNOSTIC TROUBLE CODE (DTC) ON DISPLAY.**	Does the Subaru Select Monitor or OBD-II general scan tool indicate DTC P0301 and P0303?	Go to step **24.**	Go to step **20.**
20	**CHECK DIAGNOSTIC TROUBLE CODE (DTC) ON DISPLAY.**	Does the Subaru Select Monitor or OBD-II general scan tool indicate DTC P0302 and P0304?	Go to step **25.**	Go to step **26.**
21	**ONLY ONE CYLINDER**	Is there a fault in that cylinder?	Repair or replace faulty parts. NOTE: Check the following items. • Spark plug • Spark plug cord • Fuel injector • Compression ratio	Go to DTC P0171 and P0172. <Ref. to EN(DOHC TURBO)-152, DTC P0171 — FUEL TRIM MALFUNCTION (A/F TOO LEAN) —, Diagnostic Procedure with Diagnostic Trouble Code (DTC).>

GETtheMANUALS.org

	Step	Check	Yes	No
22	GROUP OF #1 AND #2 CYLINDERS	Are there faults in #1 and #2 cylinders?	Repair or replace faulty parts. NOTE: • Check the following items. • Spark plugs • Fuel injectors • Ignition coil • Compression ratio • If no abnormal is discovered, check for "IGNITION CONTROL SYSTEM" of #1 and #2 cylinders side. <Ref. to EN(DOHC TURBO)-72, IGNITION CONTROL SYSTEM, Diagnostics for Engine Starting Failure.>	Go to DTC P0171 and P0172. <Ref. to EN(DOHC TURBO)-152, DTC P0171 — FUEL TRIM MALFUNCTION (A/F TOO LEAN) —, Diagnostic Procedure with Diagnostic Trouble Code (DTC).>
23	GROUP OF #3 AND #4 CYLINDERS	Are there faults in #3 and #4 cylinders?	Repair or replace faulty parts. NOTE: • Check the following items. • Spark plugs • Fuel injectors • Ignition coil • If no abnormal is discovered, check for "IGNITION CONTROL SYSTEM" of #3 and #4 cylinders side. <Ref. to EN(DOHC TURBO)-72, IGNITION CONTROL SYSTEM, Diagnostics for Engine Starting Failure.>	Go to DTC P0171 and P0172. <Ref. to EN(DOHC TURBO)-152, DTC P0171 — FUEL TRIM MALFUNCTION (A/F TOO LEAN) —, Diagnostic Procedure with Diagnostic Trouble Code (DTC).>
24	GROUP OF #1 AND #3 CYLINDERS	Are there faults in #1 and #3 cylinders?	Repair or replace faulty parts. NOTE: Check the following items. • Spark plugs • Fuel injectors • Skipping timing belt teeth	Go to DTC P0171 and P0172. <Ref. to EN(DOHC TURBO)-152, DTC P0171 — FUEL TRIM MALFUNCTION (A/F TOO LEAN) —, Diagnostic Procedure with Diagnostic Trouble Code (DTC).>

GETtheMANUALS.org

	Step	Check	Yes	No
25	**GROUP OF #2 AND #4 CYLINDERS**	Are there faults in #2 and #4 cylinders?	Repair or replace faulty parts. NOTE: Check the following items. • Spark plugs • Fuel injectors • Compression ratio • Skipping timing belt teeth	Go to DTC P0171 and P0172. <Ref. to EN(DOHC TURBO)-152, DTC P0171 — FUEL TRIM MALFUNCTION (A/F TOO LEAN) —, Diagnostic Procedure with Diagnostic Trouble Code (DTC).>
26	**CYLINDER AT RANDOM**	Is the engine idle rough?	Go to DTC P0171 and P0172. <Ref. to EN(DOHC TURBO)-152, DTC P0171 — FUEL TRIM MALFUNCTION (A/F TOO LEAN) —, Diagnostic Procedure with Diagnostic Trouble Code (DTC).>	Repair or replace faulty parts. NOTE: Check the following items. • Spark plugs • Fuel injectors • Compression ratio

GETtheMANUALS.org

GETtheMANUALS.org

AL:DTC P0327 — KNOCK SENSOR CIRCUIT LOW INPUT —

- **DTC DETECTING CONDITION:**
  - Immediately at fault recognition
- **TROUBLE SYMPTOM:**
  - Poor driving performance
  - Knocking occurs.

CAUTION:
After repair or replacement of faulty parts, conduct Clear Memory Mode <Ref. to EN(DOHC TURBO)-49, OPERATION, Clear Memory Mode.> and Inspection Mode <Ref. to EN(DOHC TURBO)-46, Inspection Mode.>.

- **WIRING DIAGRAM:**

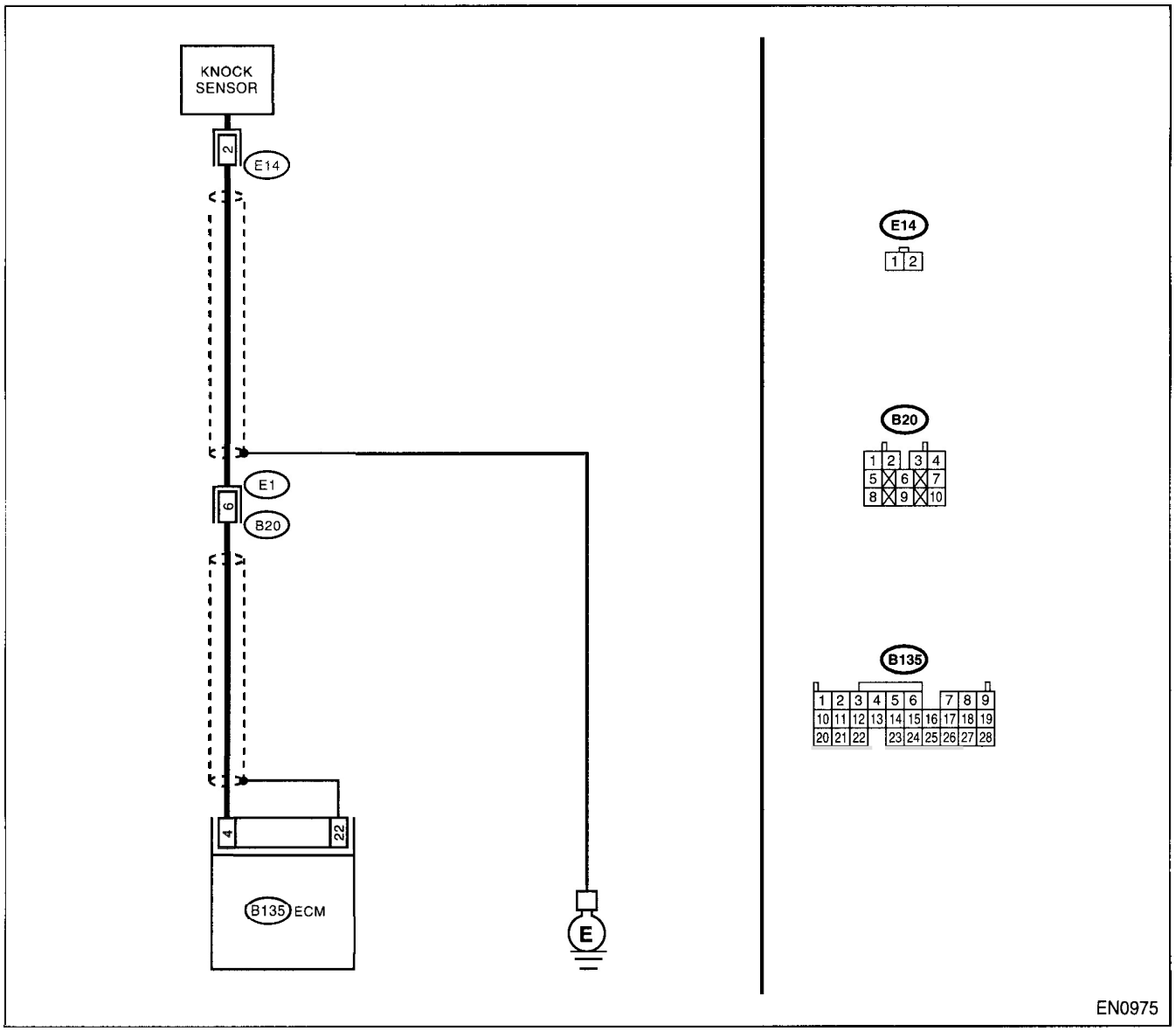

GETtheMANUALS.org

	Step	Check	Yes	No
1	**CHECK HARNESS BETWEEN KNOCK SENSOR AND ECM CONNECTOR.** 1)Turn the ignition switch to OFF. 2)Disconnect the connector from ECM. 3)Measure the resistance between ECM harness connector and chassis ground. ***Connector & terminal*** ***(B135) No. 4 — Chassis ground:***	Is the resistance more than 700 kΩ?	Go to step **2.**	Repair harness and connector. NOTE: In this case, repair the following: • Open circuit in harness between knock sensor and ECM connector • Poor contact in knock sensor connector • Poor contact in coupling connector
2	**CHECK KNOCK SENSOR.** 1)Disconnect the connector from knock sensor. 2)Measure the resistance between knock sensor connector terminal and engine ground. ***Terminal*** ***No. 2 — Engine ground:***	Is the resistance more than 700 kΩ?	Go to step **3.**	Repair harness and connector. NOTE: In this case, repair the following: • Open circuit in harness between knock sensor and ECM connector • Poor contact in knock sensor connector • Poor contact in coupling connector
3	**CHECK CONDITION OF KNOCK SENSOR INSTALLATION.**	Is the knock sensor installation bolt tightened securely?	Replace the knock sensor. <Ref. to FU(DOHC TURBO)-32, Knock Sensor.>	Tighten knock sensor installation bolt securely.

GETtheMANUALS.org

AM:DTC P0328 — KNOCK SENSOR CIRCUIT HIGH INPUT —

- **DTC DETECTING CONDITION:**
  - Immediately at fault recognition
- **TROUBLE SYMPTOM:**
  - Poor driving performance
  - Knocking occurs.

CAUTION:
After repair or replacement of faulty parts, conduct Clear Memory Mode <Ref. to EN(DOHC TURBO)-49, OPERATION, Clear Memory Mode.> and Inspection Mode <Ref. to EN(DOHC TURBO)-46, Inspection Mode.>.

- **WIRING DIAGRAM:**

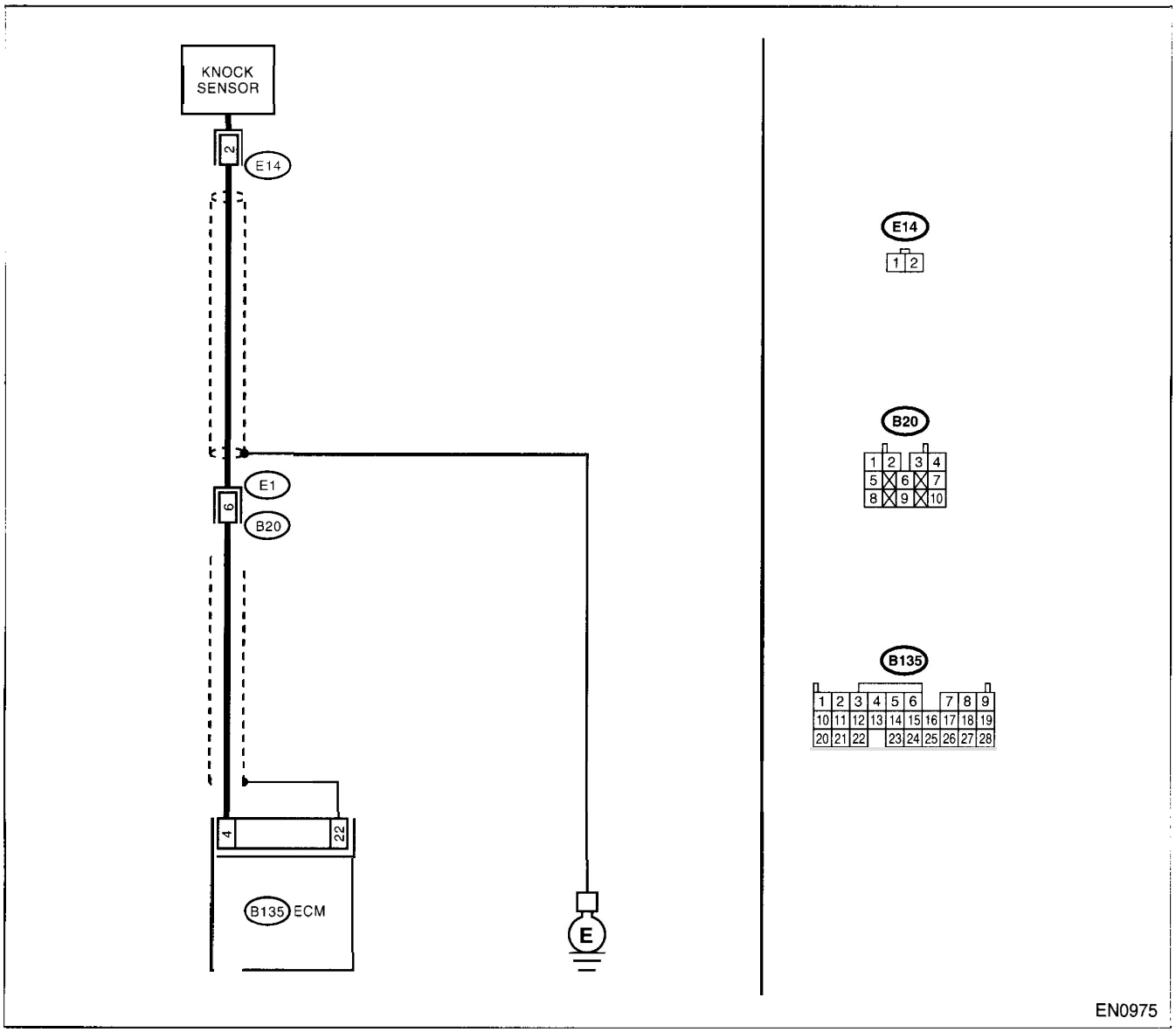

GETtheMANUALS.org

	Step	Check	Yes	No
1	**CHECK HARNESS BETWEEN KNOCK SENSOR AND ECM CONNECTOR.** Measure the resistance of harness between ECM connector and chassis ground. ***Connector & terminal*** ***(B135) No. 4 — Chassis ground:***	Is the resistance less than 400 kΩ?	Go to step **2.**	Go to step **3.**
2	**CHECK KNOCK SENSOR.** 1)Disconnect the connector from knock sensor. 2)Measure the resistance between knock sensor connector terminal and engine ground. ***Terminal*** ***No. 2 — Engine ground:***	Is the resistance less than 400 kΩ?	Replace the knock sensor. <Ref. to FU(DOHC TURBO)-32, Knock Sensor.>	Repair ground short circuit in harness between knock sensor connector and ECM connector. NOTE: The harness between both connectors is shielded. Repair short circuit of harness together with shield.
3	**CHECK INPUT SIGNAL FOR ECM.** 1)Connect the connectors to ECM and knock sensor. 2)Turn the ignition switch to ON. 3)Measure the voltage between ECM and chassis ground. ***Connector & terminal*** ***(B135) No. 4 (+) — Chassis ground (–):***	Is the voltage more than 2 V?	Even if MIL lights up, the circuit has returned to a normal condition at this time. (However, the possibility of poor contact still remains.) NOTE: In this case, repair the following: • Poor contact in knock sensor connector • Poor contact in ECM connector • Poor contact in coupling connector	Repair poor contact in ECM connector.

GETtheMANUALS.org

AN:DTC P0335 — CRANKSHAFT POSITION SENSOR CIRCUIT MALFUNCTION

—

- **DTC DETECTING CONDITION:**
  - Immediately at fault recognition
- **TROUBLE SYMPTOM:**
  - Engine stalls.
  - Failure of engine to start

CAUTION:
After repair or replacement of faulty parts, conduct Clear Memory Mode <Ref. to EN(DOHC TURBO)-49, OPERATION, Clear Memory Mode.> and Inspection Mode <Ref. to EN(DOHC TURBO)-46, Inspection Mode.>.

- **WIRING DIAGRAM:**

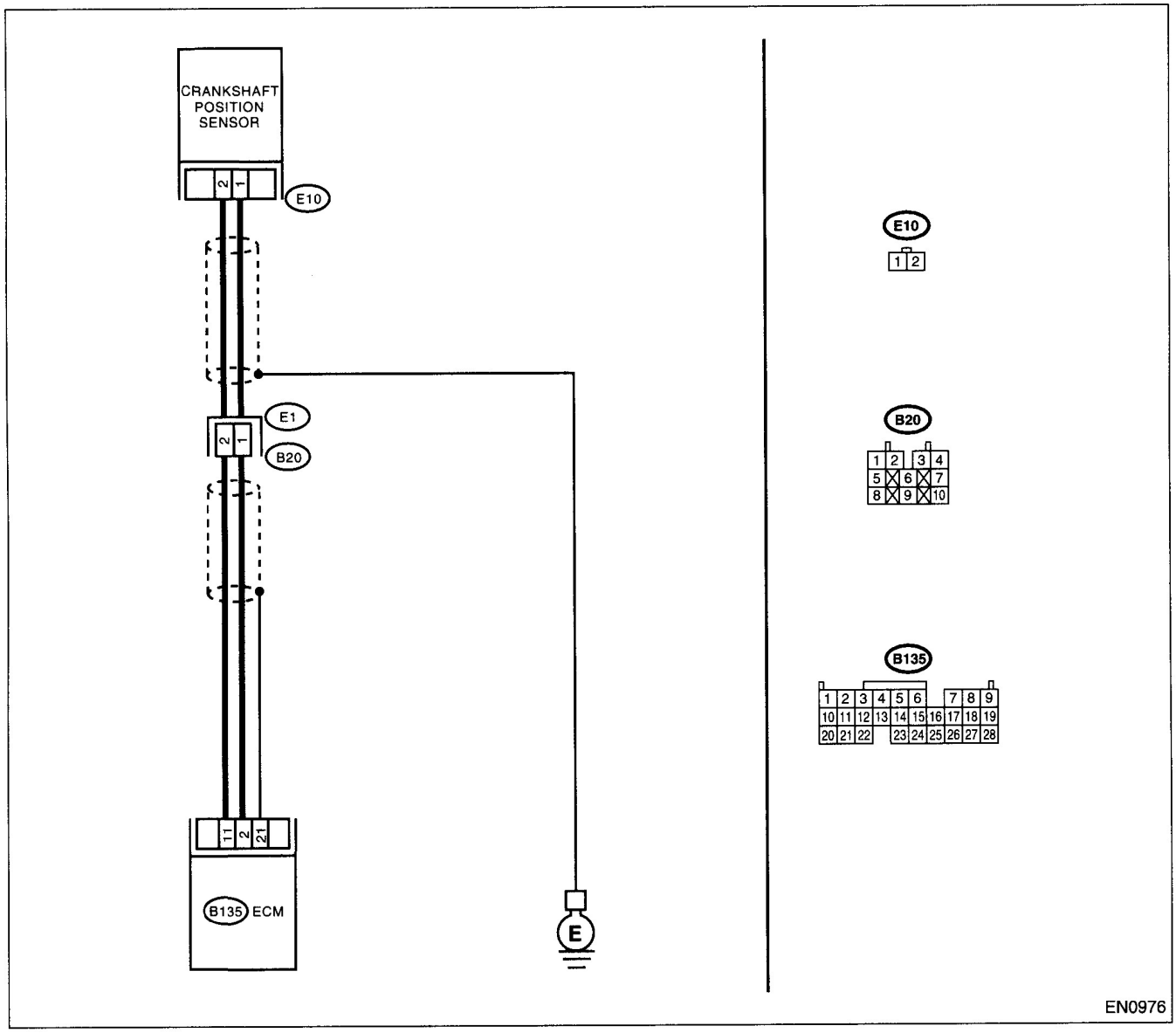

GETtheMANUALS.org

	Step	Check	Yes	No
1	**CHECK HARNESS BETWEEN CRANKSHAFT POSITION SENSOR AND ECM CONNECTOR.** 1)Turn the ignition switch to OFF. 2)Disconnect the connector from crankshaft position sensor. 3)Measure the resistance of harness between crankshaft position sensor connector and engine ground. ***Connector & terminal*** ***(E10) No. 1 — Engine ground:***	Is the resistance more than 100 kΩ?	Repair harness and connector. NOTE: In this case, repair the following: • Open circuit in harness between crankshaft position sensor and ECM connector • Poor contact in ECM connector • Poor contact in coupling connector	Go to step **2.**
2	**CHECK HARNESS BETWEEN CRANKSHAFT POSITION SENSOR AND ECM CONNECTOR.** Measure the resistance of harness between crankshaft position sensor connector and engine ground. ***Connector & terminal*** ***(E10) No. 1 — Engine ground:***	Is the resistance less than 10 Ω?	Repair ground short circuit in harness between crankshaft position sensor and ECM connector. NOTE: The harness between both connectors are shielded. Repair ground short circuit in harness together with shield.	Go to step **3.**
3	**CHECK HARNESS BETWEEN CRANKSHAFT POSITION SENSOR AND ECM CONNECTOR.** Measure the resistance of harness between crankshaft position sensor connector and engine ground. ***Connector & terminal*** ***(E10) No. 2 — Engine ground:***	Is the resistance less than 5 Ω?	Go to step **4.**	Repair harness and connector. NOTE: In this case, repair the following: • Open circuit in harness between crankshaft position sensor and ECM connector • Poor contact in ECM connector • Poor contact in coupling connector
4	**CHECK CONDITION OF CRANKSHAFT POSITION SENSOR.**	Is the crankshaft position sensor installation bolt tightened securely?	Go to step **5.**	Tighten the crankshaft position sensor installation bolt securely.
5	**CHECK CRANKSHAFT POSITION SENSOR.** 1)Remove the crankshaft position sensor. 2)Measure the resistance between connector terminals of crankshaft position sensor. ***Terminals*** ***No. 1 — No. 2:***	Is the resistance between 1 and 4 kΩ?	Repair poor contact in crankshaft position sensor connector.	Replace the crankshaft position sensor. <Ref. to FU(DOHC TURBO)-30, Crankshaft Position Sensor.>

GETtheMANUALS.org

AO:DTC P0336 — CRANKSHAFT POSITION SENSOR CIRCUIT RANGE/PERFORMANCE PROBLEM —

- **DTC DETECTING CONDITION:**
  - Immediately at fault recognition
- **TROUBLE SYMPTOM:**
  - Engine stalls.
  - Failure of engine to start

CAUTION:
After repair or replacement of faulty parts, conduct Clear Memory Mode <Ref. to EN(DOHC TURBO)-49, OPERATION, Clear Memory Mode.> and Inspection Mode <Ref. to EN(DOHC TURBO)-46, Inspection Mode.>.

- **WIRING DIAGRAM:**

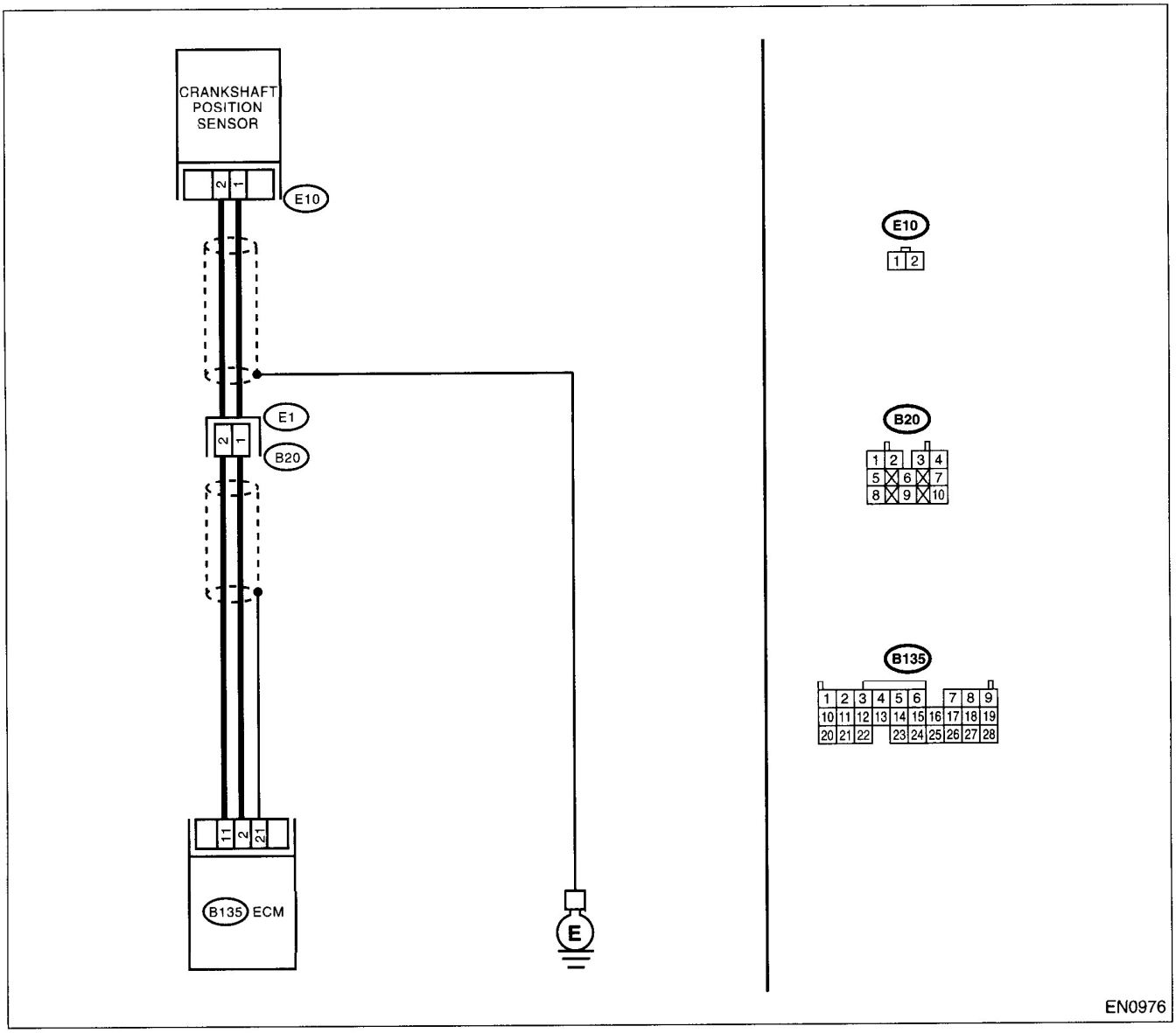

GETtheMANUALS.org

	Step	Check	Yes	No
1	**CHECK ANY OTHER DTC ON DISPLAY.**	Does the Subaru Select Monitor or OBD-II general scan tool indicate DTC P0335?	Inspect DTC P0335 using "List of Diagnostic Trouble Code (DTC)". <Ref. to EN(DOHC TURBO)-80, List of Diagnostic Trouble Code (DTC).>	Go to step **2.**
2	**CHECK CONDITION OF CRANKSHAFT POSITION SENSOR.** Turn the ignition switch to OFF.	Is the crankshaft position sensor installation bolt tightened securely?	Go to step **3.**	Tighten crankshaft position sensor installation bolt securely.
3	**CHECK CRANKSHAFT SPROCKET.** Remove the front belt cover.	Are crankshaft sprocket teeth cracked or damaged?	Replace the crankshaft sprocket. <Ref. to FU(DOHC TURBO)-30, Crankshaft Position Sensor.>	Go to step **4.**
4	**CHECK INSTALLATION CONDITION OF TIMING BELT.** Turn the crankshaft using ST, and align alignment mark on crankshaft sprocket with alignment mark on cylinder block. ST 499987500 CRANKSHAFT SOCKET	Is the timing belt dislocated from its proper position?	Repair installation condition of timing belt. <Ref. to ME(DOHC TURBO)-48, Timing Belt Assembly.>	Replace the crankshaft position sensor. <Ref. to FU(DOHC TURBO)-30, Crankshaft Position Sensor.>

GETtheMANUALS.org

AP:DTC P0340 — CAMSHAFT POSITION SENSOR CIRCUIT MALFUNCTION —

- **DTC DETECTING CONDITION:**
  - Immediately at fault recognition
- **TROUBLE SYMPTOM:**
  - Engine stalls.
  - Failure of engine to start

CAUTION:
After repair or replacement of faulty parts, conduct Clear Memory Mode <Ref. to EN(DOHC TURBO)-49, OPERATION, Clear Memory Mode.> and Inspection Mode <Ref. to EN(DOHC TURBO)-46, Inspection Mode.>.

- **WIRING DIAGRAM:**

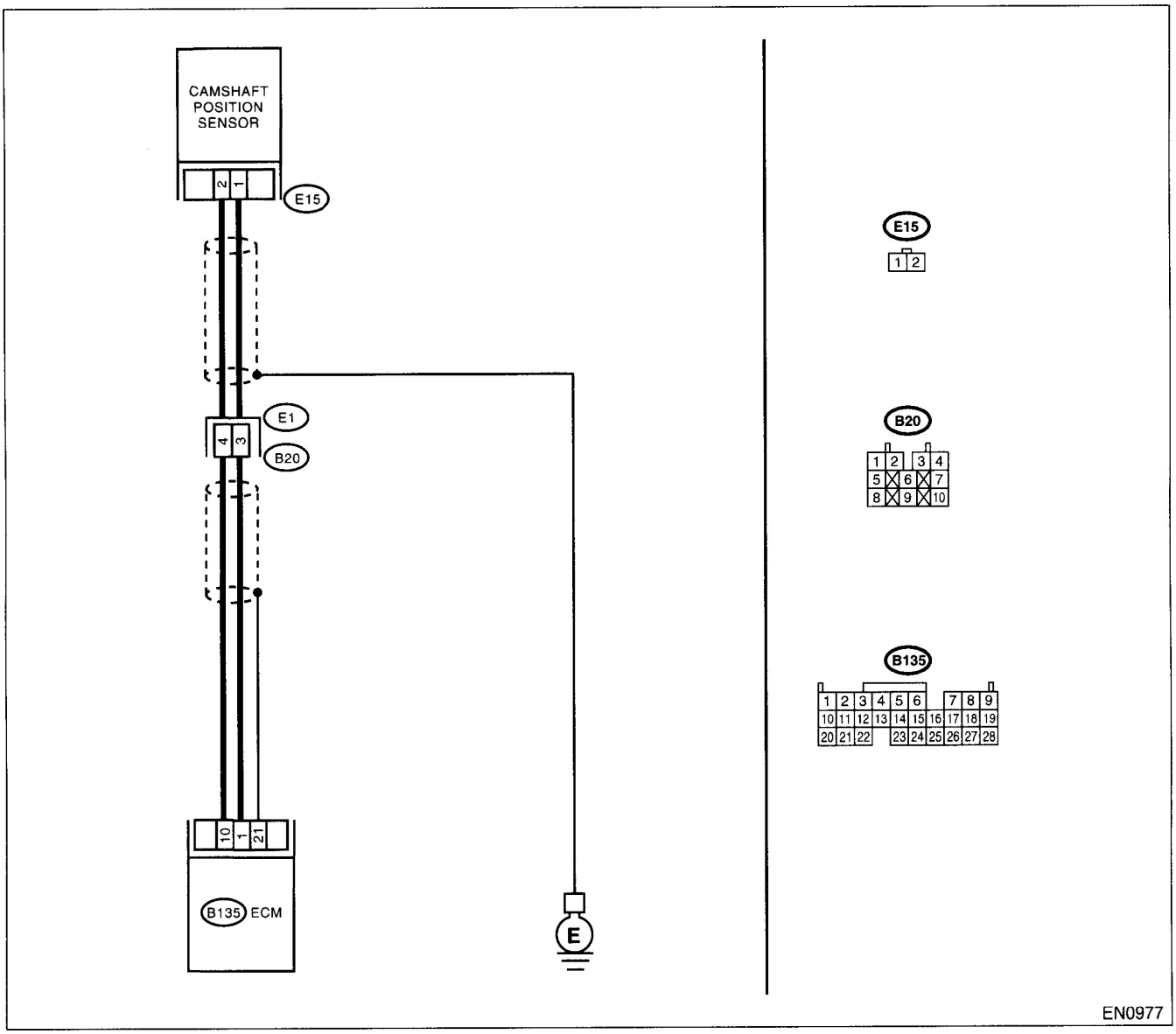

GETtheMANUALS.org

	Step	Check	Yes	No
1	**CHECK HARNESS BETWEEN CAMSHAFT POSITION SENSOR AND ECM CONNECTOR.** 1)Turn the ignition switch to OFF. 2)Disconnect the connector from camshaft position sensor. 3)Measure the resistance of harness between camshaft position sensor connector and engine ground. ***Connector & terminal*** ***(E15) No. 1 — Engine ground:***	Is the resistance more than 100 kΩ?	Repair harness and connector. NOTE: In this case, repair the following: • Open circuit in harness between camshaft position sensor and ECM connector • Poor contact in ECM connector • Poor contact in coupling connector	Go to step **2.**
2	**CHECK HARNESS BETWEEN CAMSHAFT POSITION SENSOR AND ECM CONNECTOR.** Measure the resistance of harness between camshaft position sensor connector and engine ground. ***Connector & terminal*** ***(E15) No. 1 — Engine ground:***	Is the resistance less than 10 Ω?	Repair ground short circuit in harness between camshaft position sensor and ECM connector. NOTE: The harness between both connectors are shielded. Repair ground short circuit in harness together with shield.	Go to step **3.**
3	**CHECK HARNESS BETWEEN CAMSHAFT POSITION SENSOR AND ECM CONNECTOR.** Measure the resistance of harness between camshaft position sensor connector and engine ground. ***Connector & terminal*** ***(E15) No. 2 — Engine ground:***	Is the resistance less than 5 Ω?	Go to step **4.**	Repair harness and connector. NOTE: In this case, repair the following: • Open circuit in harness between camshaft position sensor and ECM connector • Poor contact in ECM connector • Poor contact in coupling connector
4	**CHECK CONDITION OF CAMSHAFT POSITION SENSOR.**	Is the camshaft position sensor installation bolt tightened securely?	Go to step **5.**	Tighten camshaft position sensor installation bolt securely.
5	**CHECK CAMSHAFT POSITION SENSOR.** 1)Remove the camshaft position sensor. 2)Measure the resistance between connector terminals of camshaft position sensor. ***Terminals*** ***No. 1 — No. 2:***	Is the resistance between 1 and 4 kΩ?	Repair poor contact in camshaft position sensor connector.	Replace the camshaft position sensor. <Ref. to FU(DOHC TURBO)-31, Camshaft Position Sensor.>

GETtheMANUALS.org

AQ:DTC P0341 — CAMSHAFT POSITION SENSOR CIRCUIT RANGE/PERFORMANCE PROBLEM —

- **DTC DETECTING CONDITION:**
  - Immediately at fault recognition
- **TROUBLE SYMPTOM:**
  - Engine stalls.
  - Failure of engine to start

CAUTION:
After repair or replacement of faulty parts, conduct Clear Memory Mode <Ref. to EN(DOHC TURBO)-49, OPERATION, Clear Memory Mode.> and Inspection Mode <Ref. to EN(DOHC TURBO)-46, Inspection Mode.>.

- **WIRING DIAGRAM:**

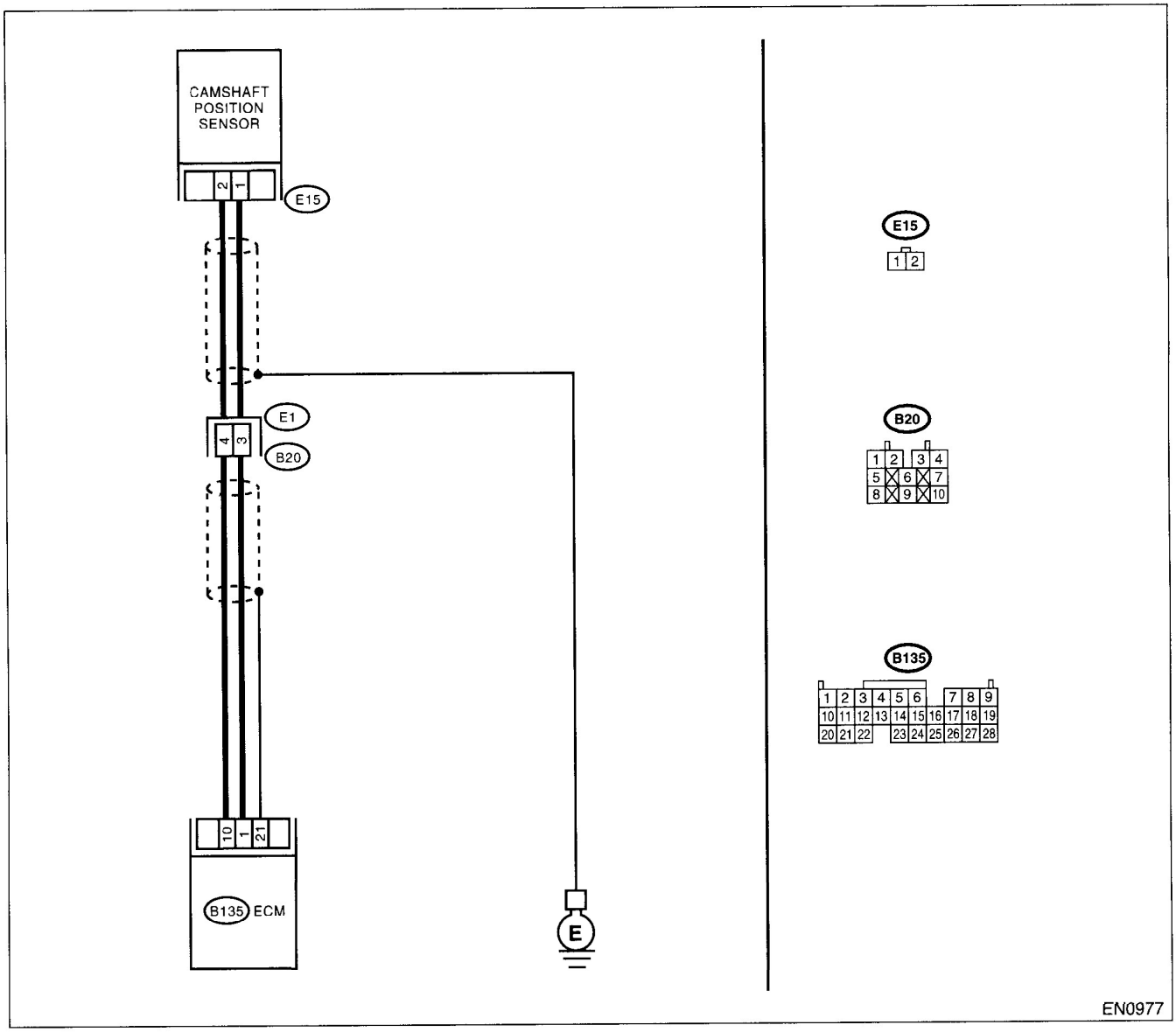

GETtheMANUALS.org

	Step	Check	Yes	No
1	**CHECK ANY OTHER DTC ON DISPLAY.**	Does the Subaru Select Monitor or OBD-II general scan tool indicate DTC P0340?	Inspect DTC P0340 using "List of Diagnostic Trouble Code (DTC)". <Ref. to EN(DOHC TURBO)-80, List of Diagnostic Trouble Code (DTC).>	Go to step **2.**
2	**CHECK HARNESS BETWEEN CAMSHAFT POSITION SENSOR AND ECM CONNECTOR.** 1)Turn the ignition switch to OFF. 2)Disconnect the connector from camshaft position sensor. 3)Measure the resistance of harness between camshaft position sensor connector and engine ground. ***Connector & terminal*** ***(E15) No. 1 — Engine ground:***	Is the resistance more than 100 kΩ?	Repair harness and connector. NOTE: In this case, repair the following: • Open circuit in harness between camshaft position sensor and ECM connector • Poor contact in ECM connector • Poor contact in coupling connector	Go to step **3.**
3	**CHECK HARNESS BETWEEN CAMSHAFT POSITION SENSOR AND ECM CONNECTOR.** Measure the resistance of harness between camshaft position sensor connector and engine ground. ***Connector & terminal*** ***(E15) No. 1 — Engine ground:***	Is the resistance less than 10 Ω?	Repair ground short circuit in harness between camshaft position sensor and ECM connector. NOTE: The harness between both connectors are shielded. Repair ground short circuit in harness together with shield.	Go to step **4.**
4	**CHECK HARNESS BETWEEN CAMSHAFT POSITION SENSOR AND ECM CONNECTOR.** Measure the resistance of harness between camshaft position sensor connector and engine ground. ***Connector & terminal*** ***(E15) No. 2 — Engine ground:***	Is the resistance less than 5 Ω?	Go to step **5.**	Repair harness and connector. NOTE: In this case, repair the following: • Open circuit in harness between camshaft position sensor and ECM connector • Poor contact in ECM connector • Poor contact in coupling connector
5	**CHECK CONDITION OF CAMSHAFT POSITION SENSOR.**	Is the camshaft position sensor installation bolt tightened securely?	Go to step **6.**	Tighten camshaft position sensor installation bolt securely.

GETtheMANUALS.org

	Step	Check	Yes	No
6	**CHECK CAMSHAFT POSITION SENSOR.** 1)Remove the camshaft position sensor. 2)Measure the resistance between connector terminals of camshaft position sensor. ***Terminals*** ***No. 1 — No. 2:***	Is the resistance between 1 and 4 kΩ?	Go to step **7.**	Replace the camshaft position sensor. <Ref. to FU(DOHC TURBO)-31, Camshaft Position Sensor.>
7	**CHECK CONDITION OF CAMSHAFT POSITION SENSOR.** Turn the ignition switch to OFF.	Is the camshaft position sensor installation bolt tightened securely?	Go to step **8.**	Tighten camshaft position sensor installation bolt securely.
8	**CHECK CAMSHAFT SPROCKET.** Remove the front belt cover. <Ref. to ME(SOHC)-46, Belt Cover.>	Are camshaft sprocket teeth cracked or damaged?	Replace the camshaft sprocket. <Ref. to ME(DOHC TURBO)-57, Camshaft Sprocket.>	Go to step **9.**
9	**CHECK INSTALLATION CONDITION OF TIMING BELT.** Turn the camshaft using ST, and align alignment mark on camshaft sprocket with alignment mark on timing belt cover LH. ST 499207100 CAMSHAFT SPROCKET WRENCH	Is the timing belt dislocated from its proper position?	Repair installation condition of timing belt. <Ref. to ME(DOHC TURBO)-48, Timing Belt Assembly.>	Replace the camshaft position sensor. <Ref. to FU(DOHC TURBO)-31, Camshaft Position Sensor.>

GETtheMANUALS.org

GETtheMANUALS.org

AR:DTC P0420 — CATALYST SYSTEM EFFICIENCY BELOW THRESHOLD —

- **DTC DETECTING CONDITION:**
  - Two consecutive driving cycles with fault
- **TROUBLE SYMPTOM:**
  - Engine stalls.
  - Idle mixture is out of specifications.

CAUTION:
After repair or replacement of faulty parts, conduct Clear Memory Mode <Ref. to EN(DOHC TURBO)-49, OPERATION, Clear Memory Mode.> and Inspection Mode <Ref. to EN(DOHC TURBO)-46, Inspection Mode.>.

- **WIRING DIAGRAM:**

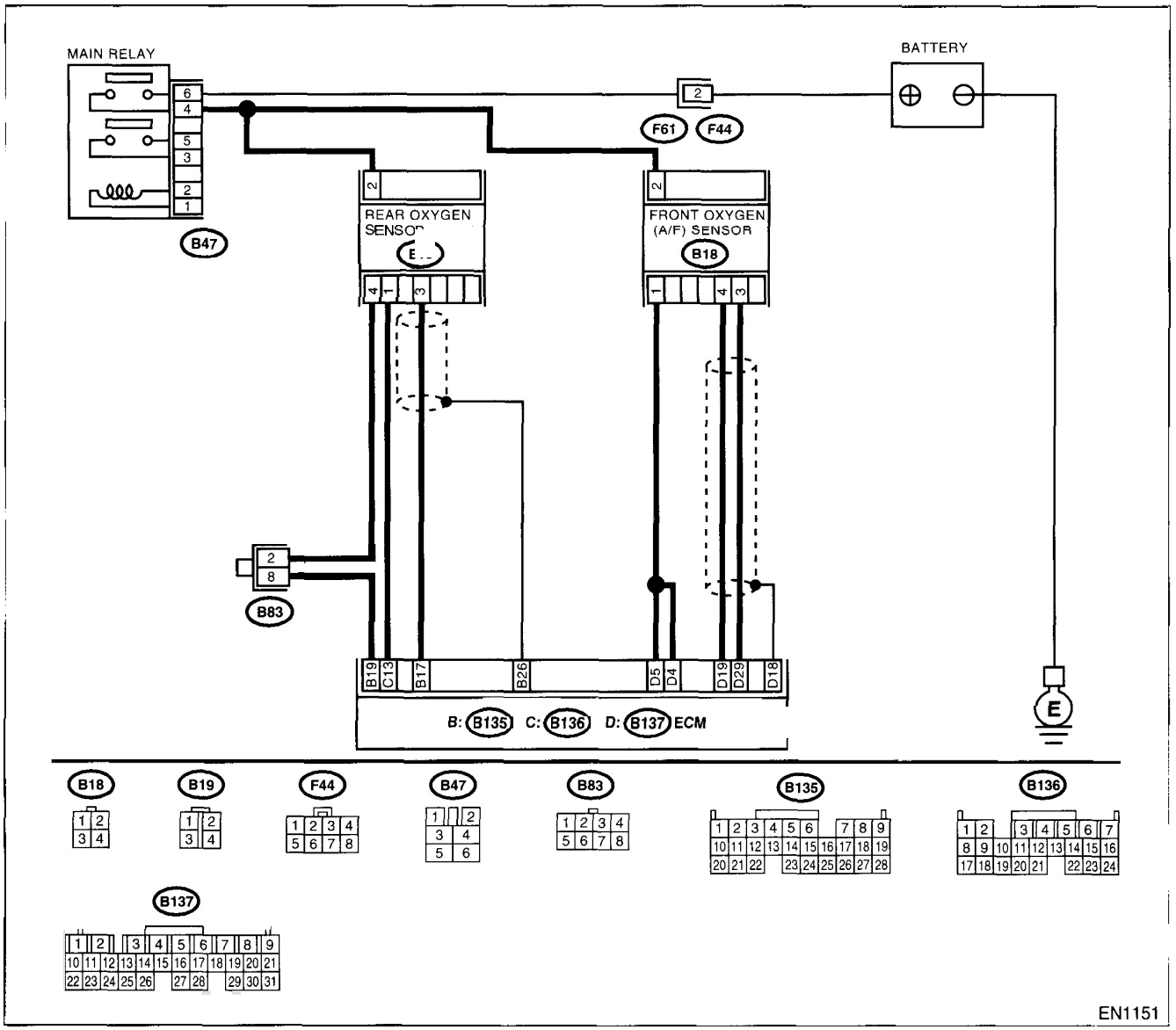

GETtheMANUALS.org

Step		Check	Yes	No
1	**CHECK ANY OTHER DTC ON DISPLAY.**	Does the Subaru Select Monitor or OBD-II general scan tool indicate DTC P0031, P0032, P0131, P0132, P0133, P1130, P1131, P1134, P1139, P0037, P0038, P0136 and P0139?	Inspect the relevant DTC using "List of Diagnostic Trouble Code (DTC)". <Ref. to EN(DOHC TURBO)-80, List of Diagnostic Trouble Code (DTC).> NOTE: In this case, it is not necessary to inspect DTC P0420.	Go to step **2.**
2	**CHECK EXHAUST SYSTEM.** Check for gas leaks or air suction caused by loose or dislocated nuts and bolts, and open hole at exhaust pipes. NOTE: Check the following positions. •Between cylinder head and front exhaust pipe •Between front exhaust pipe and front catalytic converter •Between front catalytic converter and rear catalytic converter	Is there a fault in exhaust system?	Repair or replace the exhaust system. <Ref. to EX(DOHC TURBO)-2, General Description.>	Go to step **3.**
3	**CHECK REAR CATALYTIC CONVERTER.** Separate rear catalytic converter from rear exhaust pipe.	Is there damage at rear face of rear catalyst?	Replace the front catalytic converter <Ref. to EC(DOHC TURBO)-3, Front Catalytic Converter.> and rear catalytic converter <Ref. to EC(DOHC TURBO)-4, Rear Catalytic Converter.>	Go to step **4.**
4	**CHECK FRONT CATALYTIC CONVERTER.** Remove the front catalytic converter.	Is there damage at rear face or front face of front catalyst?	Replace the front catalytic converter. <Ref. to EC(DOHC TURBO)-3, Front Catalytic Converter.>	Contact with SOA (distributor) service. NOTE: Inspection by DTM is required, because probable cause is deterioration of multiple parts.

GETtheMANUALS.org

GETtheMANUALS.org

AS:DTC P0442 — EVAPORATIVE EMISSION CONTROL SYSTEM MALFUNCTION —

- **DTC DETECTING CONDITION:**
  - Two consecutive driving cycles with fault
- **TROUBLE SYMPTOM:**
  - Gasoline smell
  - There is a hole of more than 1.0 mm (0.04 in) dia. in evaporation system or fuel tank.

CAUTION:
After repair or replacement of faulty parts, conduct Clear Memory Mode <Ref. to EN(DOHC TURBO)-49, Operation.> OPERATION, Clear Memory Mode.> and Inspection Mode <Ref. to EN(DOHC TURBO)-46, Inspection Mode.>.

GETtheMANUALS.org

- **WIRING DIAGRAM:**

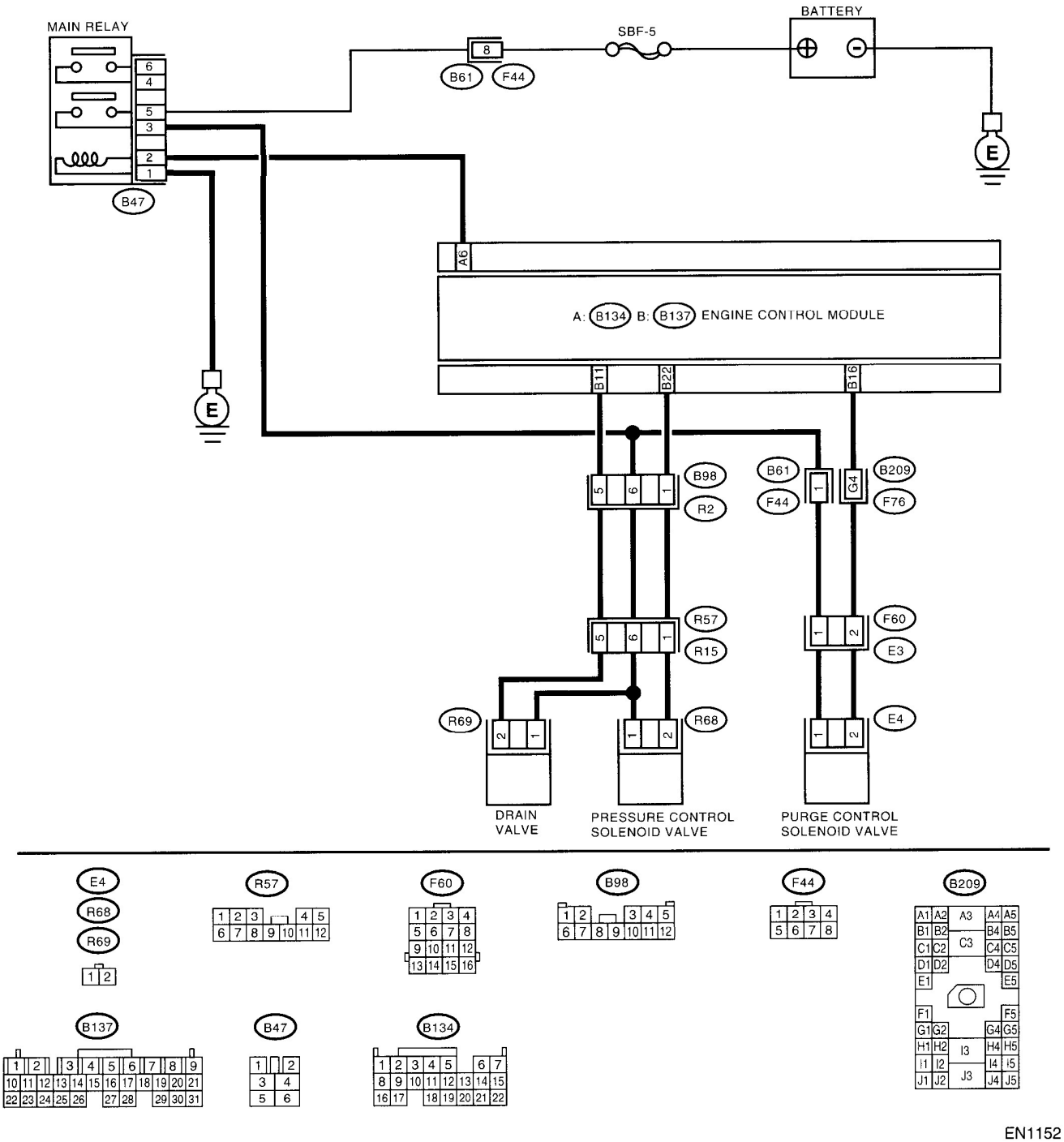

EN1152

GETtheMANUALS.org

	Step	Check	Yes	No
1	**CHECK ANY OTHER DTC ON DISPLAY.**	Is there any other DTC on display?	Inspect the relevant DTC using "List of Diagnostic Trouble Code (DTC)". <Ref. to EN(DOHC TURBO)-80, List of Diagnostic Trouble Code (DTC).>	Go to step **2.**
2	**CHECK FUEL FILLER CAP.** 1)Turn the ignition switch to OFF. 2)Check the fuel filler cap. NOTE: The DTC code is stored in memory if fuel filler cap is or was loose or if the cap chain was caught while tightening.	Is the fuel filler cap tightened securely?	Go to step **3.**	Tighten fuel filler cap securely.
3	**CHECK FUEL FILLER PIPE PACKING.**	Is there any damage to the seal between fuel filler cap and fuel filler pipe?	Repair or replace the fuel filler cap and fuel filler pipe. <Ref. to FU(DOHC TURBO)-55, Fuel Filler Pipe.>	Go to step **4.**
4	**CHECK DRAIN VALVE.** 1)Connect the test mode connector. 2)Turn the ignition switch to ON. 3)Operate the drain valve. NOTE: Drain valve operation can also be executed using Subaru Select Monitor. For the procedure, refer to "Compulsory Valve Operation Check Mode". <Ref. to EN(DOHC TURBO)-50, Compulsory Valve Operation Check Mode.>	Does the drain valve produce operating sound?	Go to step **5.**	Replace the drain valve. <Ref. to EC(DOHC TURBO)-17, Drain Valve.>
5	**CHECK PURGE CONTROL SOLENOID VALVE.** Operate the purge control solenoid valve. NOTE: Purge control solenoid valve operation can also be executed using Subaru Select Monitor. For the procedure, refer to "Compulsory Valve Operation Check Mode". <Ref. to EN(DOHC TURBO)-50, Compulsory Valve Operation Check Mode.>	Does the purge control solenoid valve produce operating sound?	Go to step **6.**	Replace the purge control solenoid valve. <Ref. to EC(DOHC TURBO)-7, Purge Control Solenoid Valve.>
6	**CHECK PRESSURE CONTROL SOLENOID VALVE.** Operate the pressure control solenoid valve. NOTE: Pressure control solenoid valve operation can also be executed using Subaru Select Monitor. For the procedure, refer to "Compulsory Valve Operation Check Mode". <Ref. to EN(DOHC TURBO)-50, Compulsory Valve Operation Check Mode.>	Does the pressure control solenoid valve produce operating sound?	Go to step **7.**	Replace the pressure control solenoid valve. <Ref. to EC(DOHC TURBO)-12, Pressure Control Solenoid Valve.>
7	**CHECK EVAPORATIVE EMISSION CONTROL SYSTEM LINE.** Turn the ignition switch to OFF.	Is there a hole of more than 1.0 mm (0.04 in) dia. on fuel line?	Repair or replace the fuel line. <Ref. to FU(DOHC TURBO)-68, Fuel Delivery, Return and Evaporation Lines.>	Go to step **8.**

GETtheMANUALS.org

	Step	Check	Yes	No
8	**CHECK CANISTER.**	Is the canister damaged or is there a hole of more than 1.0 mm (0.04 in) dia. in it?	Repair or replace the canister. <Ref. to EC(DOHC TURBO)-6, Canister.>	Go to step **9.**
9	**CHECK FUEL TANK.** Remove the fuel tank. <Ref. to FU(DOHC TURBO)-52, Fuel Tank.>	Is the fuel tank damaged or is there a hole of more than 1.0 mm (0.04 in) dia. in it?	Repair or replace the fuel tank. <Ref. to FU(DOHC TURBO)-52, Fuel Tank.>	Go to step **10.**
10	**CHECK ANY OTHER MECHANICAL TROUBLE IN EVAPORATIVE EMISSION CONTROL SYSTEM.**	Are there holes of more than 1.0 mm (0.04 in) dia., cracks, clogging or disconnections of hoses or pipes in evaporative emission control system?	Repair or replace the hoses or pipes.	Contact with SOA (distributor) service. NOTE: Inspection by DTM is required, because probable cause is deterioration of multiple parts.

GETtheMANUALS.org

GETtheMANUALS.org

AT:DTC P0444 — EVAPORATIVE EMISSION CONTROL SYSTEM PURGE CONTROL VALVE CIRCUIT LOW INPUT —

- **DTC DETECTING CONDITION:**
  - Two consecutive driving cycles with fault
- **TROUBLE SYMPTOM:**
  - Erroneous idling

CAUTION:
After repair or replacement of faulty parts, conduct Clear Memory Mode <Ref. to EN(DOHC TURBO)-49, OPERATION, Clear Memory Mode.> and Inspection Mode <Ref. to EN(DOHC TURBO)-46, Inspection Mode.>.

- **WIRING DIAGRAM:**

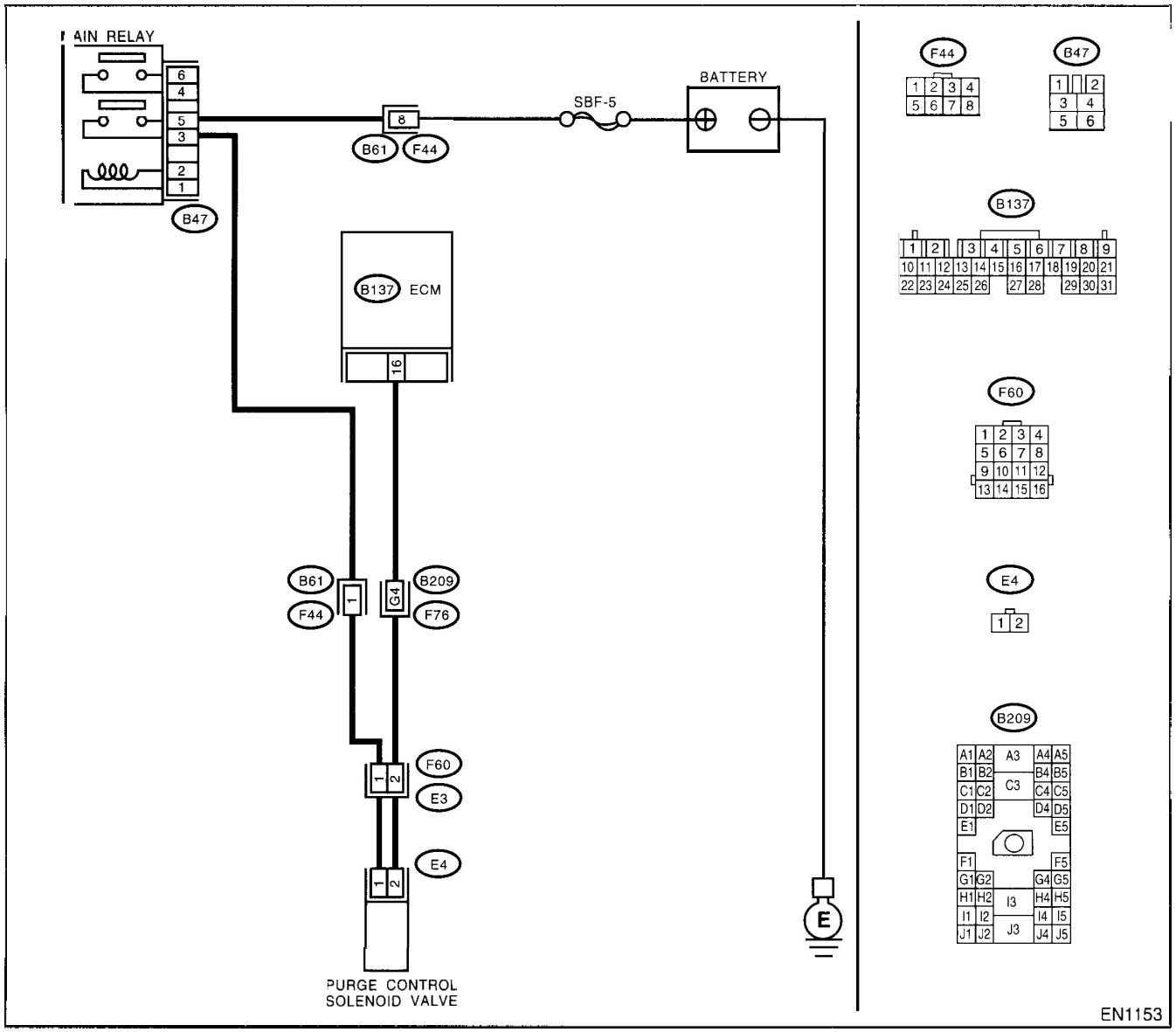

GETtheMANUALS.org

	Step	Check	Yes	No
1	**CHECK OUTPUT SIGNAL FROM ECM.** 1)Turn the ignition switch to ON. 2)Measure the voltage between ECM and chassis ground. ***Connector & terminal*** ***(B137) No. 16 (+) — Chassis ground (–):***	Is the voltage more than 10 V?	Even if MIL lights up, the circuit has returned to a normal condition at this time. Contact with SOA (distributor) service. NOTE: Inspection by DTM is required, because probable cause is deterioration of multiple parts.	Go to step **2.**
2	**CHECK HARNESS BETWEEN PURGE CONTROL SOLENOID VALVE AND ECM CONNECTOR.** 1)Turn the ignition switch to OFF. 2)Disconnect the connectors from purge control solenoid valve and ECM. 3)Measure the resistance of harness between purge control solenoid valve connector and engine ground. ***Connector & terminal*** ***(E4) No. 2 — Engine ground:***	Is the resistance less than 10 Ω?	Repair ground short circuit in harness between ECM and purge control solenoid valve connector.	Go to step **3.**
3	**CHECK HARNESS BETWEEN PURGE CONTROL SOLENOID VALVE AND ECM CONNECTOR.** Measure the resistance of harness between ECM and purge control solenoid valve of harness connector. ***Connector & terminal*** ***(B137) No. 16 — (E4) No. 2:***	Is the resistance less than 1 Ω?	Go to step **4.**	Repair open circuit in harness between ECM and purge control solenoid valve connector. NOTE: In this case, repair the following: • Open circuit in harness between ECM and purge control solenoid valve connector • Poor contact in coupling connector
4	**CHECK PURGE CONTROL SOLENOID VALVE.** 1)Remove the purge control solenoid valve. 2)Measure the resistance between purge control solenoid valve terminals. ***Terminals*** ***No. 1 — No. 2:***	Is the resistance between 10 and 100 Ω?	Go to step **5.**	Replace the purge control solenoid valve. <Ref. to EC(DOHC TURBO)-7, Purge Control Solenoid Valve.>
5	**CHECK POWER SUPPLY TO PURGE CONTROL SOLENOID VALVE.** 1)Turn the ignition switch to ON. 2)Measure the voltage between purge control solenoid valve and engine ground. ***Connector & terminal*** ***(E4) No. 1 (+) — Engine ground (–):***	Is the voltage more than 10 V?	Go to step **6.**	Repair open circuit in harness between main relay and purge control solenoid valve connector.

GETtheMANUALS.org

	Step	Check	Yes	No
6	**CHECK POOR CONTACT.** Check poor contact in purge control solenoid valve connector.	Is there poor contact in purge control solenoid valve connector?	Repair poor contact in purge control solenoid valve connector.	Contact with SOA (distributor) service. NOTE: Inspection by DTM is required, because probable cause is deterioration of multiple parts.

GETtheMANUALS.org

GETtheMANUALS.org

AU:DTC P0445 — EVAPORATIVE EMISSION CONTROL SYSTEM PURGE CONTROL VALVE CIRCUIT HIGH INPUT —

- **DTC DETECTING CONDITION:**
  - Two consecutive driving cycles with fault
- **TROUBLE SYMPTOM:**
  - Erroneous idling

CAUTION:
After repair or replacement of faulty parts, conduct Clear Memory Mode <Ref. to EN(DOHC TURBO)-49, OPERATION, Clear Memory Mode.> and Inspection Mode <Ref. to EN(DOHC TURBO)-46, Inspection Mode.>.

- **WIRING DIAGRAM:**

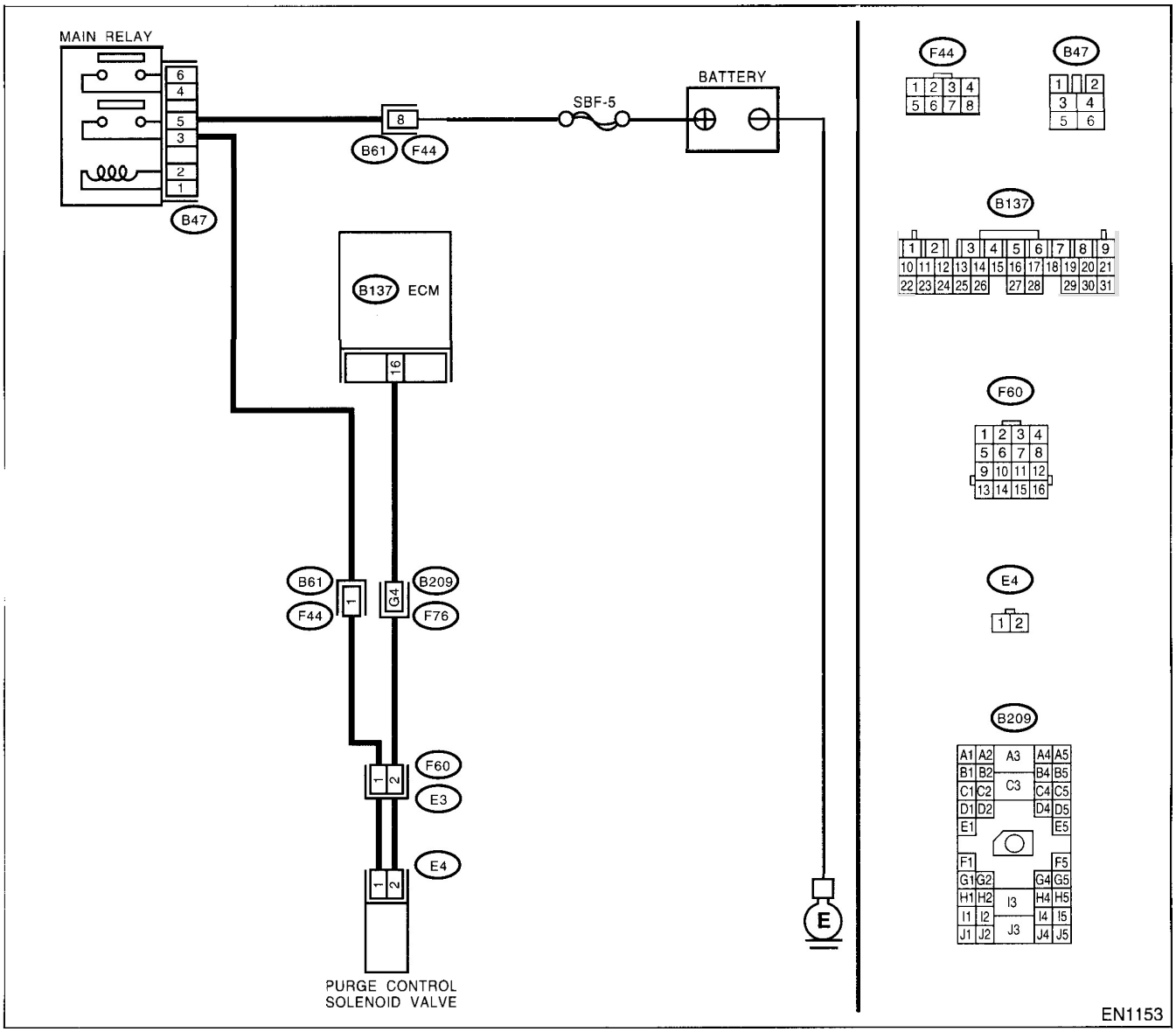

GETtheMANUALS.org

	Step	Check	Yes	No
1	**CHECK OUTPUT SIGNAL FROM ECM.** 1)Turn the ignition switch to OFF. 2)Connect the test mode connector at the lower portion of instrument panel (on the driver's side), to the side of the center console box. 3)Turn the ignition switch to ON. 4)While operating the purge control solenoid valve, measure voltage between ECM and chassis ground. NOTE: Purge control solenoid valve operation can be executed using Subaru Select Monitor. For procedure, refer to "Compulsory Valve Operation Check Mode". <Ref. to EN(DOHC TURBO)-50, Compulsory Valve Operation Check Mode.> ***Connector & terminal*** ***(B137) No. 16 (+) — Chassis ground (–):***	Does the voltage change between 0 and 10 V?	Go to step **2.**	Even if MIL light up, the circuit has returned to a normal condition at this time. In this case, repair poor contact in ECM connector.
2	**CHECK OUTPUT SIGNAL FROM ECM.** 1)Turn the ignition switch to ON. 2)Measure the voltage between ECM and chassis ground. ***Connector & terminal*** ***(B137) No. 16 (+) — Chassis ground (–):***	Is the voltage more than 10 V?	Go to step **4.**	Go to step **3.**
3	**CHECK POOR CONTACT.** Check poor contact in ECM connector.	Is there poor contact in ECM connector?	Repair poor contact in ECM connector.	Replace the ECM. <Ref. to FU(DOHC TURBO)-47, Engine Control Module.>
4	**CHECK HARNESS BETWEEN PURGE CONTROL SOLENOID VALVE AND ECM CONNECTOR.** 1)Turn the ignition switch to OFF. 2)Disconnect the connector from purge control solenoid valve. 3)Turn the ignition switch to ON. 4)Measure the voltage between ECM and chassis ground. ***Connector & terminal*** ***(B137) No. 16 (+) — Chassis ground (–):***	Is the voltage more than 10 V?	Repair battery short circuit in harness between ECM and purge control solenoid valve connector. After repair, replace the ECM. <Ref. to FU(DOHC TURBO)-47, Engine Control Module.>	Go to step **5.**
5	**CHECK PURGE CONTROL SOLENOID VALVE.** 1)Turn the ignition switch to OFF. 2)Measure the resistance between purge control solenoid valve terminals. ***Terminals*** ***No. 1 — No. 2:***	Is the resistance less than 1 Ω?	Replace the purge control solenoid valve <Ref. to EC(DOHC TURBO)-7, Purge Control Solenoid Valve.> and ECM <Ref. to FU(DOHC TURBO)-47, Engine Control Module.>	Go to step **6.**
6	**CHECK POOR CONTACT.** Check poor contact in ECM connector.	Is there poor contact in ECM connector?	Repair poor contact in ECM connector.	Replace the ECM. <Ref. to FU(DOHC TURBO)-47, Engine Control Module.>

GETtheMANUALS.org

AV:DTC P0447 — EVAPORATIVE EMISSION CONTROL SYSTEM VENT CONTROL LOW INPUT —

- **DTC DETECTING CONDITION:**
  - Immediately at fault recognition

CAUTION:
After repair or replacement of faulty parts, conduct Clear Memory Mode <Ref. to EN(DOHC TURBO)-49, OPERATION, Clear Memory Mode.> and Inspection Mode <Ref. to EN(DOHC TURBO)-46, Inspection Mode.>.

- **WIRING DIAGRAM:**

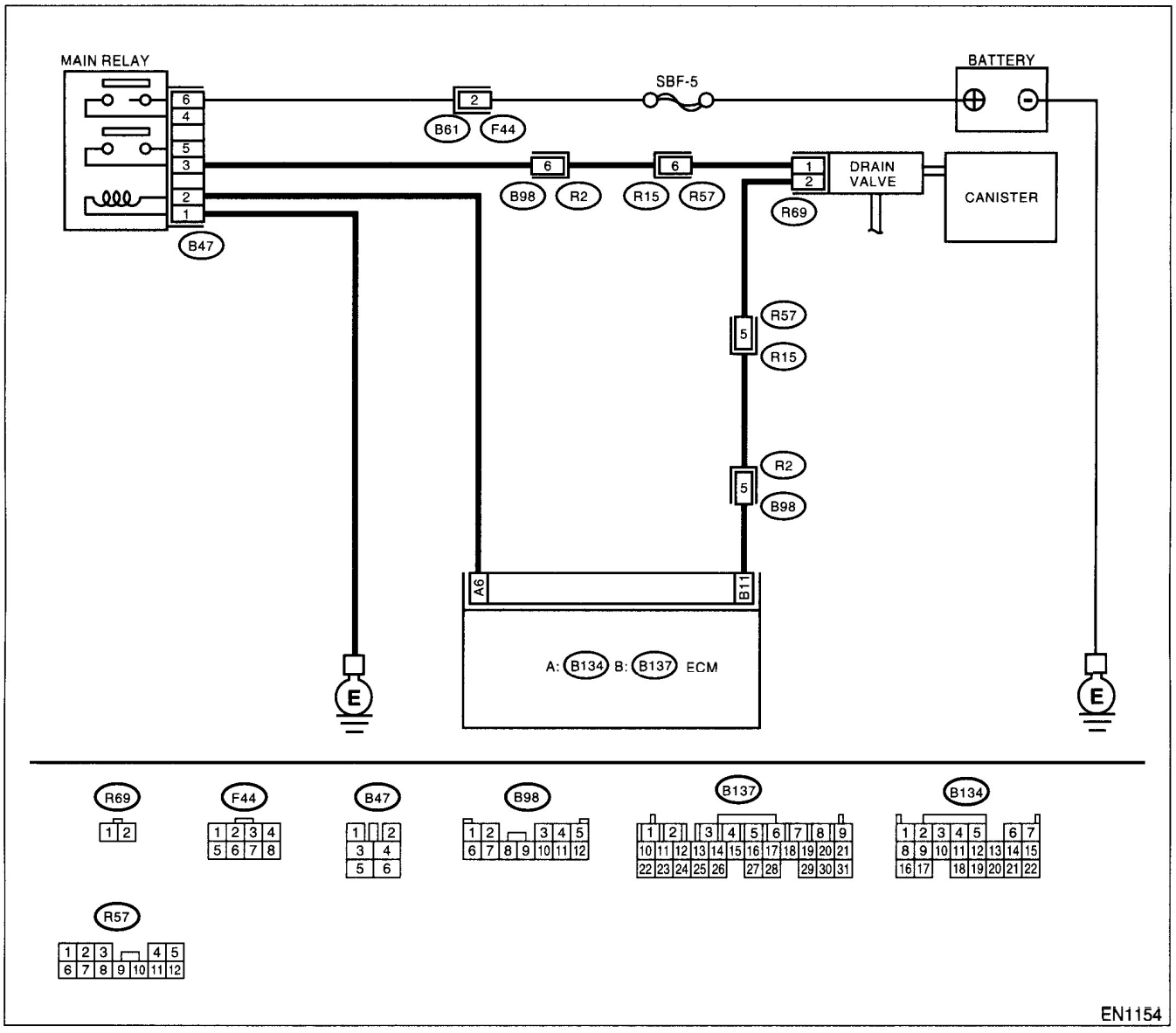

Step		Check	Yes	No
1	**CHECK OUTPUT SIGNAL FROM ECM.** 1)Turn the ignition switch to ON. 2)Measure the voltage between ECM and chassis ground. ***Connector & terminal*** ***(B137) No. 11 (+) — Chassis ground (–):***	Is the voltage more than 10 V?	Go to step **2.**	Go to step **3.**

GETtheMANUALS.org

	Step	Check	Yes	No
2	**CHECK POOR CONTACT.** Check poor contact in ECM connector.	Is there poor contact in ECM connector?	Repair poor contact in ECM connector.	Even if MIL lights up, the circuit has returned to a normal condition at this time. (However, the possibility of poor contact still remains.) NOTE: In this case, repair the following: • Poor contact in drain valve connector • Poor contact in ECM connector • Poor contact in coupling connectors
3	**CHECK HARNESS BETWEEN DRAIN VALVE AND ECM CONNECTOR.** 1)Turn the ignition switch to OFF. 2)Disconnect the connectors from drain valve and ECM. 3)Measure the resistance of harness between drain valve connector and chassis ground. ***Connector & terminal*** ***(R69) No. 2 — Chassis ground:***	Is the resistance less than 10 Ω?	Repair ground short circuit in harness between ECM and drain valve connector.	Go to step **4.**
4	**CHECK HARNESS BETWEEN DRAIN VALVE AND ECM CONNECTOR.** Measure the resistance of harness between ECM and drain valve connector. ***Connector & terminal*** ***(B137) No. 11 — (R69) No. 2:***	Is the voltage less than 1 Ω?	Go to step **5.**	Repair harness and connector. NOTE: In this case, repair the following: • Open circuit in harness between ECM and drain valve connector • Poor contact in coupling connectors
5	**CHECK DRAIN VALVE.** Measure the resistance between drain valve terminals. ***Terminals*** ***No. 1 — No. 2:***	Is the resistance between 10 and 100 Ω?	Go to step **6.**	Replace the drain valve. <Ref. to EC(DOHC TURBO)-17, Drain Valve.>
6	**CHECK POWER SUPPLY TO DRAIN VALVE.** 1)Turn the ignition switch to ON. 2)Measure the voltage between drain valve and chassis ground. ***Connector & terminal*** ***(R69) No. 1 (+) — Chassis ground (–):***	Is the voltage more than 10 V?	Go to step **7.**	Repair harness and connector. NOTE: In this case, repair the following: • Open circuit in harness between main relay and drain valve • Poor contact in coupling connectors • Poor contact in main relay connector

GETtheMANUALS.org

	Step	Check	Yes	No
7	**CHECK POOR CONTACT.** Check poor contact in drain valve connector.	Is there poor contact in drain valve connector?	Repair poor contact in drain valve connector.	Contact with SOA (distributor) service. NOTE: Inspection by DTM is required, because probable cause is deterioration of multiple parts.

GETtheMANUALS.org

GETtheMANUALS.org

AW:DTC P0448 — EVAPORATIVE EMISSION CONTROL SYSTEM VENT CONTROL HIGH INPUT —

- **DTC DETECTING CONDITION:**
  - Immediately at fault recognition

CAUTION:
After repair or replacement of faulty parts, conduct Clear Memory Mode <Ref. to EN(DOHC TURBO)-49, OPERATION, Clear Memory Mode.> and Inspection Mode <Ref. to EN(DOHC TURBO)-46, Inspection Mode.>.

- **WIRING DIAGRAM:**

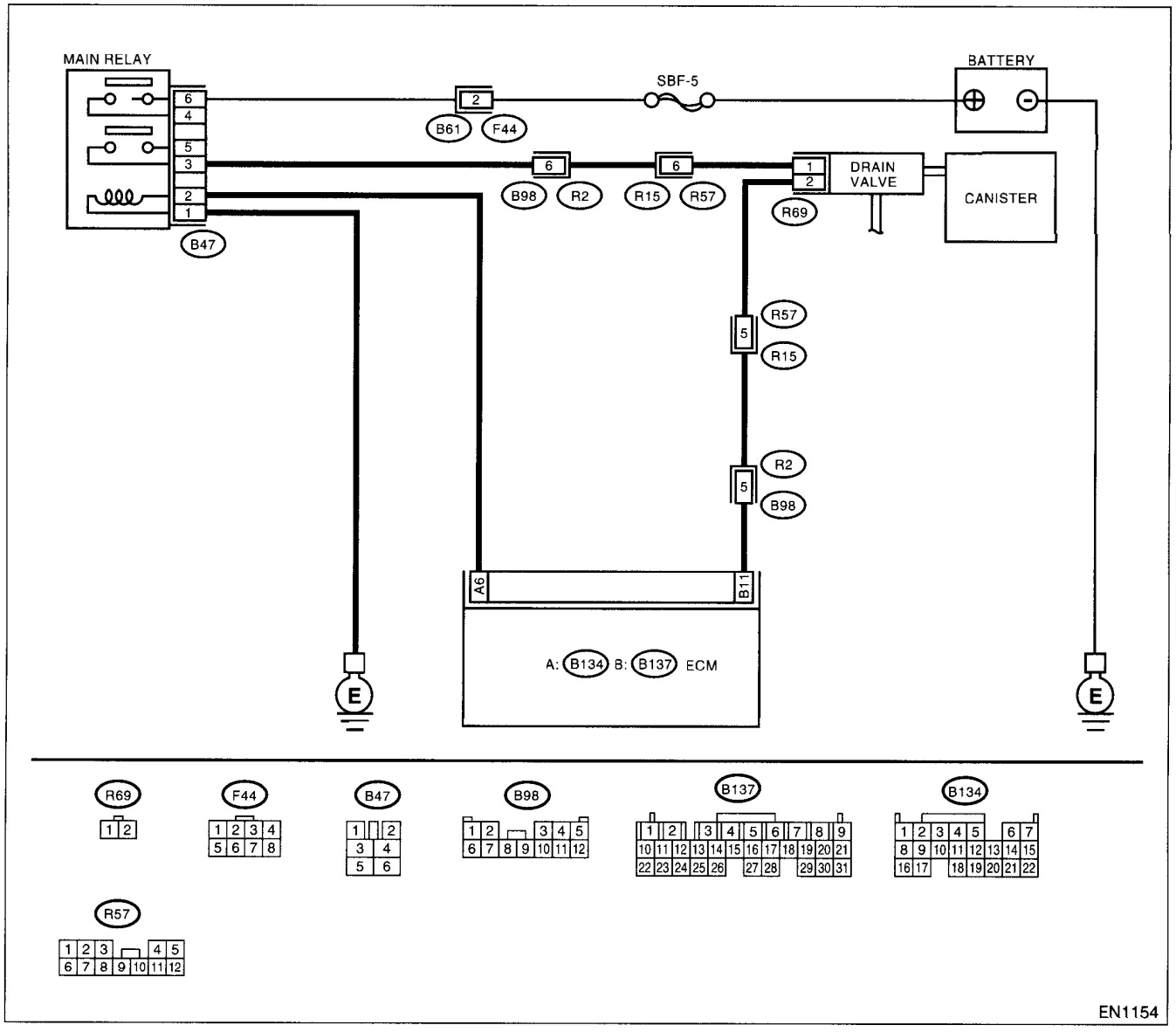

GETtheMANUALS.org

	Step	Check	Yes	No
1	**CHECK OUTPUT SIGNAL FROM ECM.** 1)Turn the ignition switch to OFF. 2)Connect the test mode connector at the lower portion of instrument panel (on the driver's side), to the side of the center console box. 3)Turn the ignition switch to ON. 4)While operating the drain valve, measure voltage between ECM and chassis ground. NOTE: Drain valve operation can be excecuted using Subaru Select Monitor. For procedure, refer to "Compulsory Valve Operation Check Mode". <Ref. to EN(DOHC TURBO)-50, Compulsory Valve Operation Check Mode.> ***Connector & terminal*** ***(B137) No. 11 (+) — Chassis ground (–):***	Does the voltage change between 0 and 10 V?	Go to step **2.**	Even if MIL lights up, the circuit has returned to a normal condition at this time. In this case, repair poor contact in ECM connector.
2	**CHECK OUTPUT SIGNAL FROM ECM.** 1)Turn the ignition switch to ON. 2)Measure the voltage between ECM and chassis ground. ***Connector & terminal*** ***(B137) No. 11 (+) — Chassis ground (–):***	Is the voltage more than 10 V?	Go to step **4.**	Go to step **3.**
3	**CHECK POOR CONTACT.** Check poor contact in ECM connector.	Is there poor contact in ECM connector?	Repair poor contact in ECM connector.	Replace the ECM. <Ref. to FU(DOHC TURBO)-47, Engine Control Module.>
4	**CHECK HARNESS BETWEEN DRAIN VALVE AND ECM CONNECTOR.** 1)Turn the ignition switch to OFF. 2)Disconnect the connector from drain valve. 3)Turn the ignition switch to ON. 4)Measure the voltage between ECM and chassis ground. ***Connector & terminal*** ***(B137) No. 11 (+) — Chassis ground (–):***	Is the voltage more than 10 V?	Repair battery short circuit in harness between ECM and drain valve connector. After repair, replace the ECM. <Ref. to FU(DOHC TURBO)-47, Engine Control Module.>	Go to step **5.**
5	**CHECK DRAIN VALVE.** 1)Turn the ignition switch to OFF. 2)Measure the resistance between drain valve terminals. ***Terminals*** ***No. 1 — No. 2:***	Is the resistance less than 1 Ω?	Replace the drain valve <Ref. to EC(DOHC TURBO)-17, Drain Valve.> and ECM <Ref. to FU(DOHC TURBO)-47, Engine Control Module.>	Go to step **6.**
6	**CHECK POOR CONTACT.** Check poor contact in ECM connector.	Is there poor contact in ECM connector?	Repair poor contact in ECM connector.	Replace the ECM. <Ref. to FU(DOHC TURBO)-47, Engine Control Module.>

GETtheMANUALS.org

AX:DTC P0451 — EVAPORATIVE EMISSION CONTROL SYSTEM PRESSURE SENSOR RANGE/PERFORMANCE PROBLEM —

- **DTC DETECTING CONDITION:**
  - Two consecutive driving cycles with fault

CAUTION:
After repair or replacement of faulty parts, conduct Clear Memory Mode <Ref. to EN(DOHC TURBO)-49, OPERATION, Clear Memory Mode.> and Inspection Mode <Ref. to EN(DOHC TURBO)-46, Inspection Mode.>.

- **WIRING DIAGRAM:**

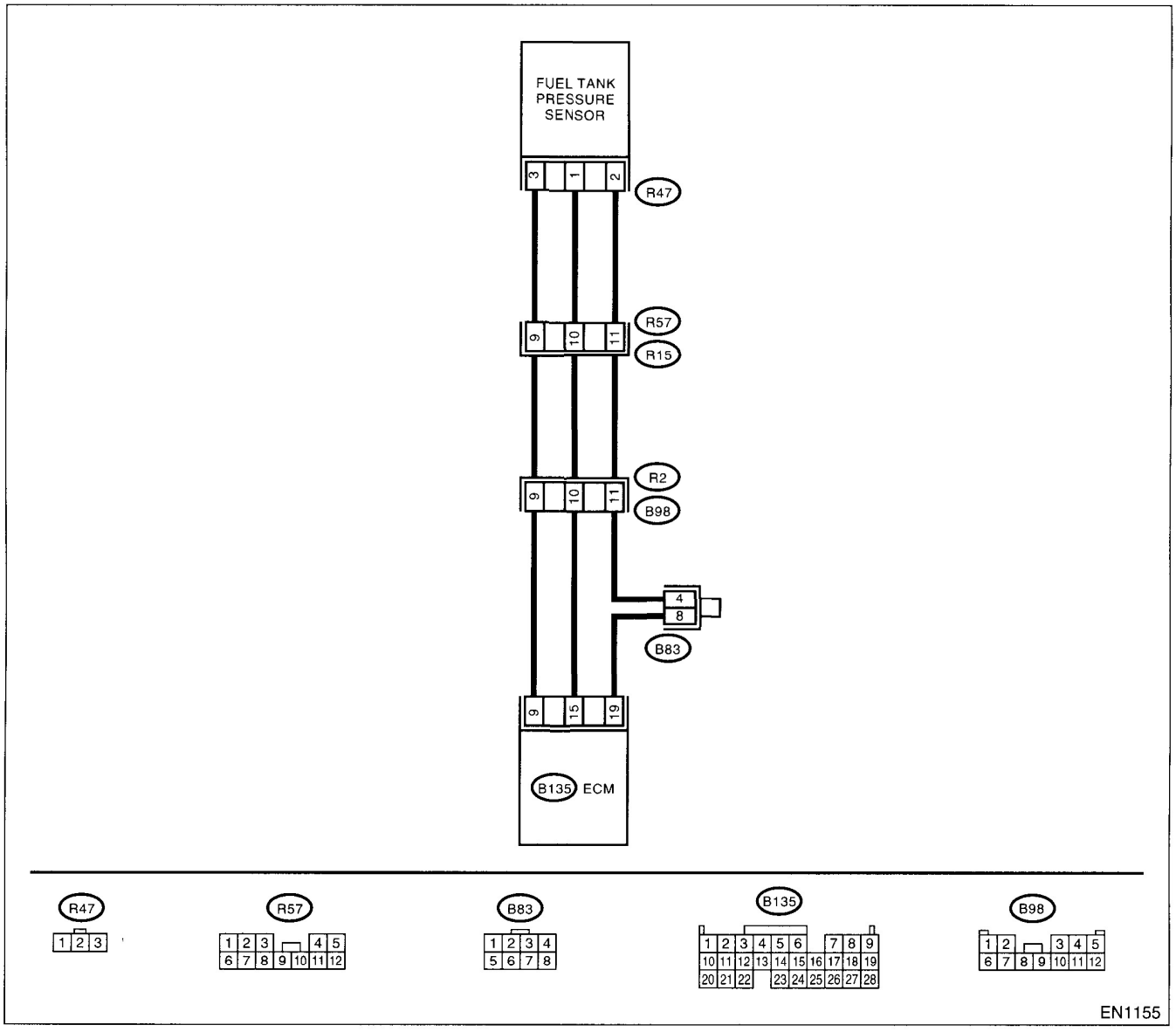

GETtheMANUALS.org

	Step	Check	Yes	No
1	**CHECK ANY OTHER DTC ON DISPLAY.**	Is there any DTC on display?	Inspect the relevant DTC using "List of Diagnostic Trouble Code (DTC)". <Ref. to EN(DOHC TURBO)-80, List of Diagnostic Trouble Code (DTC).>	Go to step **2.**
2	**CHECK FUEL FILLER CAP.** 1)Turn the ignition switch to OFF. 2)Open the fuel flap.	Is the fuel filler cap tightened securely?	Go to step **3.**	Tighten fuel filler cap securely.
3	**CHECK PRESSURE/VACUUM LINE.** NOTE: Check the following items. •Disconnection, leakage and clogging of the vacuum hoses and pipes between fuel tank pressure sensor and fuel tank •Disconnection, leakage and clogging of air ventilation hoses and pipes between fuel filler pipe and fuel tank	Is there a fault in pressure/vacuum line?	Repair or replace the hoses and pipes.	Replace the fuel tank pressure sensor. <Ref. to EC(DOHC TURBO)-11, Fuel Tank Pressure Sensor.>

GETtheMANUALS.org

AY:DTC P0452 — EVAPORATIVE EMISSION CONTROL SYSTEM PRESSURE SENSOR LOW INPUT —

- **DTC DETECTING CONDITION:**
  - Two consecutive driving cycles with fault

CAUTION:
After repair or replacement of faulty parts, conduct Clear Memory Mode <Ref. to EN(DOHC TURBO)-49, OPERATION, Clear Memory Mode.> and Inspection Mode <Ref. to EN(DOHC TURBO)-46, Inspection Mode.>.

- **WIRING DIAGRAM:**

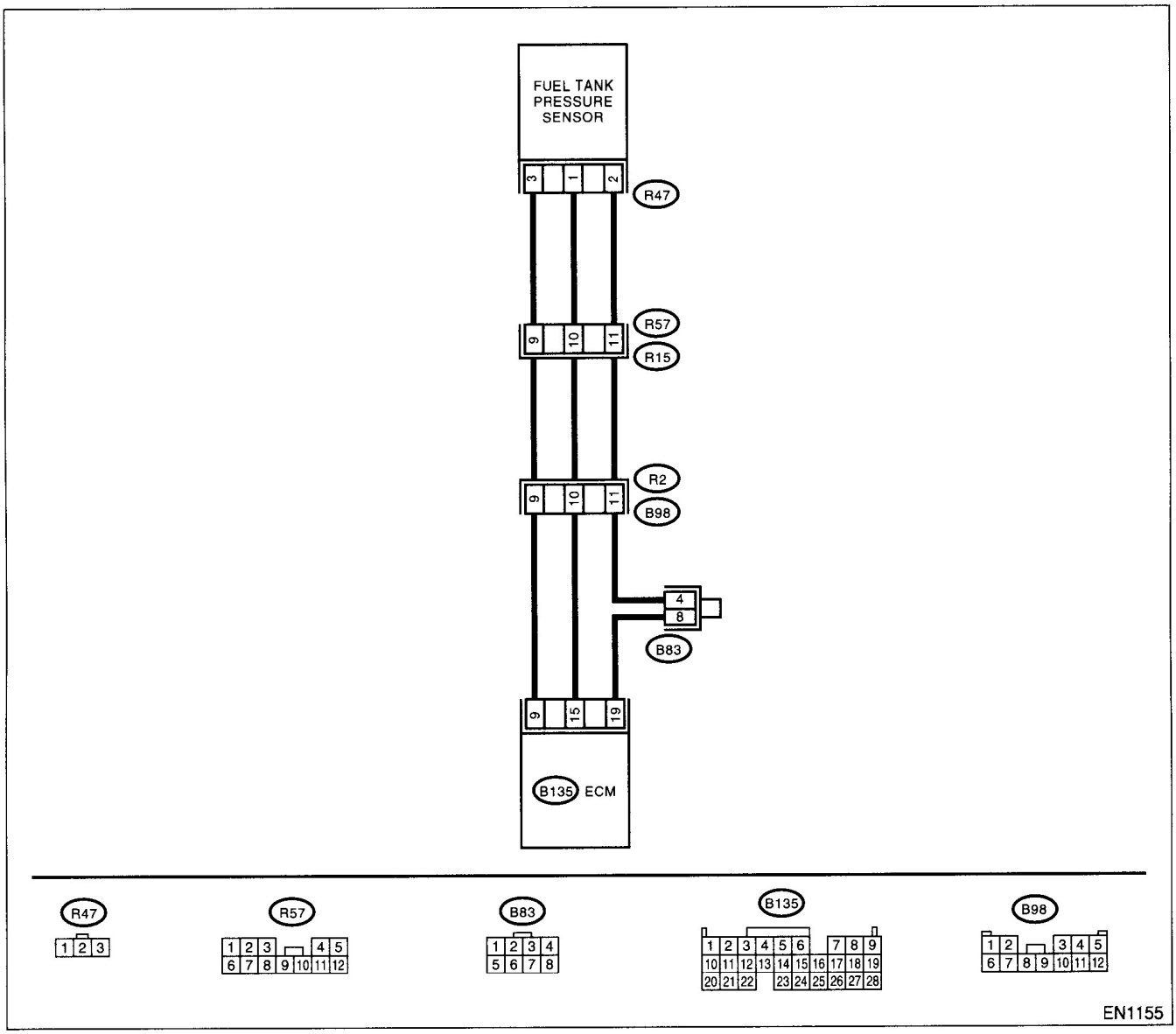

GETtheMANUALS.org

	Step	Check	Yes	No
1	**CHECK CURRENT DATA.** 1)Turn the ignition switch to OFF. 2)Remove the fuel filler cap. 3)Install the fuel filler cap. 4)Turn the ignition switch to ON. 5)Read the data of fuel tank pressure sensor signal using Subaru Select Monitor or the OBD-II general scan tool. NOTE: •Subaru Select Monitor For detailed operation procedure, refer to the "READ CURRENT DATA FOR ENGINE". <Ref. to EN(DOHC TURBO)-38, Subaru Select Monitor.> •OBD-II general scan tool For detailed operation procedures, refer to the OBD-II General Scan Tool Instruction Manual.	Is the value less than –2.8 kPa (–21.0 mmHg, –0.827 inHg)?	Go to step **2.**	Even if MIL lights up, the circuit has returned to a normal condition at this time.
2	**CHECK POWER SUPPLY TO FUEL TANK PRESSURE SENSOR.** Measure the voltage between ECM connector and chassis ground. ***Connector & terminal*** ***(B135) No. 9 (+) — Chassis ground (–):***	Is the voltage more than 4.5 V?	Go to step **4.**	Go to step **3.**
3	**CHECK POWER SUPPLY TO FUEL TANK PRESSURE SENSOR.** Measure the voltage between ECM connector and chassis ground. ***Connector & terminal*** ***(B135) No. 9 (+) — Chassis ground (–):***	Does the voltage change more than 4.5 V by shaking harness and connector of ECM while monitoring the value with voltage meter?	Repair poor contact in ECM connector.	Contact with SOA (distributor) service. NOTE: Inspection by DTM is required, because probable cause is deterioration of multiple parts.
4	**CHECK INPUT SIGNAL FOR ECM.** Measure the voltage between ECM and chassis ground. ***Connector & terminal*** ***(B135) No. 15 (+) — Chassis ground (–):***	Is the voltage less than 0.2 V?	Go to step **6.**	Go to step **5.**
5	**CHECK INPUT SIGNAL FOR ECM. (USING SUBARU SELECT MONITOR.)** Read the data of fuel tank pressure sensor signal using Subaru Select Monitor. NOTE: •Subaru Select Monitor For detailed operation procedure, refer to the "READ CURRENT DATA FOR ENGINE". <Ref. to EN(DOHC TURBO)-38, Subaru Select Monitor.>	Does the value change more than –2.8 kPa (–21.0 mmHg, –0.827 inHg) by shaking harness and connector of ECM while monitoring the value with Subaru Select Monitor?	Repair poor contact in ECM connector.	Go to step **6.**

GETtheMANUALS.org

	Step	Check	Yes	No
6	**CHECK HARNESS BETWEEN ECM AND COUPLING CONNECTOR IN REAR WIRING HARNESS.** 1)Turn the ignition switch to OFF. 2)Remove the rear seat cushion (Sedan) or move rear seat cushion (Wagon). 3)Separate rear wiring harness and fuel tank cord. 4)Turn the ignition switch to ON. 5)Measure the voltage between rear wiring harness connector and chassis ground. ***Connector & terminal*** ***(R15) No. 9 (+) — Chassis ground (–):***	Is the voltage more than 4.5 V?	Go to step **7.**	Repair harness and connector. NOTE: In this case, repair the following: • Open circuit in harness between ECM and rear wiring harness connector • Poor contact in coupling connector
7	**CHECK HARNESS BETWEEN ECM AND COUPLING CONNECTOR IN REAR WIRING HARNESS.** 1)Turn the ignition switch to OFF. 2)Disconnect the connector from ECM. 3)Measure the resistance of harness between ECM and rear wiring harness connector. ***Connector & terminal*** ***(B135) No. 19 — (R15) No. 11:***	Is the resistance less than 1 Ω?	Go to step **8.**	Repair harness and connector. NOTE: In this case, repair the following: • Open circuit in harness between ECM and rear wiring harness connector • Poor contact in coupling connector • Poor contact in joint connector
8	**CHECK HARNESS BETWEEN ECM AND COUPLING CONNECTOR IN REAR WIRING HARNESS.** Measure the resistance of harness between rear wiring harness connector and chassis ground. ***Connector & terminal*** ***(R15) No. 11 — Chassis ground:***	Is the resistance more than 500 kΩ?	Go to step **9.**	Repair ground short circuit in harness between ECM and rear wiring harness connector.
9	**CHECK FUEL TANK CORD.** 1)Disconnect the connector from fuel tank pressure sensor. 2)Measure the resistance of fuel tank cord. ***Connector & terminal*** ***(R57) No. 9 — (R47) No. 3:***	Is the resistance less than 1 Ω?	Go to step **10.**	Repair open circuit in fuel tank cord.
10	**CHECK FUEL TANK CORD.** Measure the resistance of fuel tank cord. ***Connector & terminal*** ***(R57) No. 11 — (R47) No. 1:***	Is the resistance less than 1 Ω?	Go to step **11.**	Repair open circuit in fuel tank cord.
11	**CHECK FUEL TANK CORD.** Measure the resistance of harness between fuel tank pressure sensor connector and chassis ground. ***Connector & terminal*** ***(R47) No. 2 — Chassis ground:***	Is the resistance more than 500 kΩ?	Go to step **12.**	Repair ground short circuit in fuel tank cord.
12	**CHECK POOR CONTACT.** Check poor contact in fuel tank pressure sensor connector.	Is there poor contact in fuel tank pressure sensor connector?	Repair poor contact in fuel tank pressure sensor connector.	Replace the fuel tank pressure sensor. <Ref. to EC(DOHC TURBO)-11, Fuel Tank Pressure Sensor.>

GETtheMANUALS.org

GETtheMANUALS.org

AZ:DTC P0453 — EVAPORATIVE EMISSION CONTROL SYSTEM PRESSURE SENSOR HIGH INPUT —

- **DTC DETECTING CONDITION:**
  - Two consecutive driving cycles with fault

CAUTION:
After repair or replacement of faulty parts, conduct Clear Memory Mode <Ref. to EN(DOHC TURBO)-49, OPERATION, Clear Memory Mode.> and Inspection Mode <Ref. to EN(DOHC TURBO)-46, Inspection Mode.>.

- **WIRING DIAGRAM:**

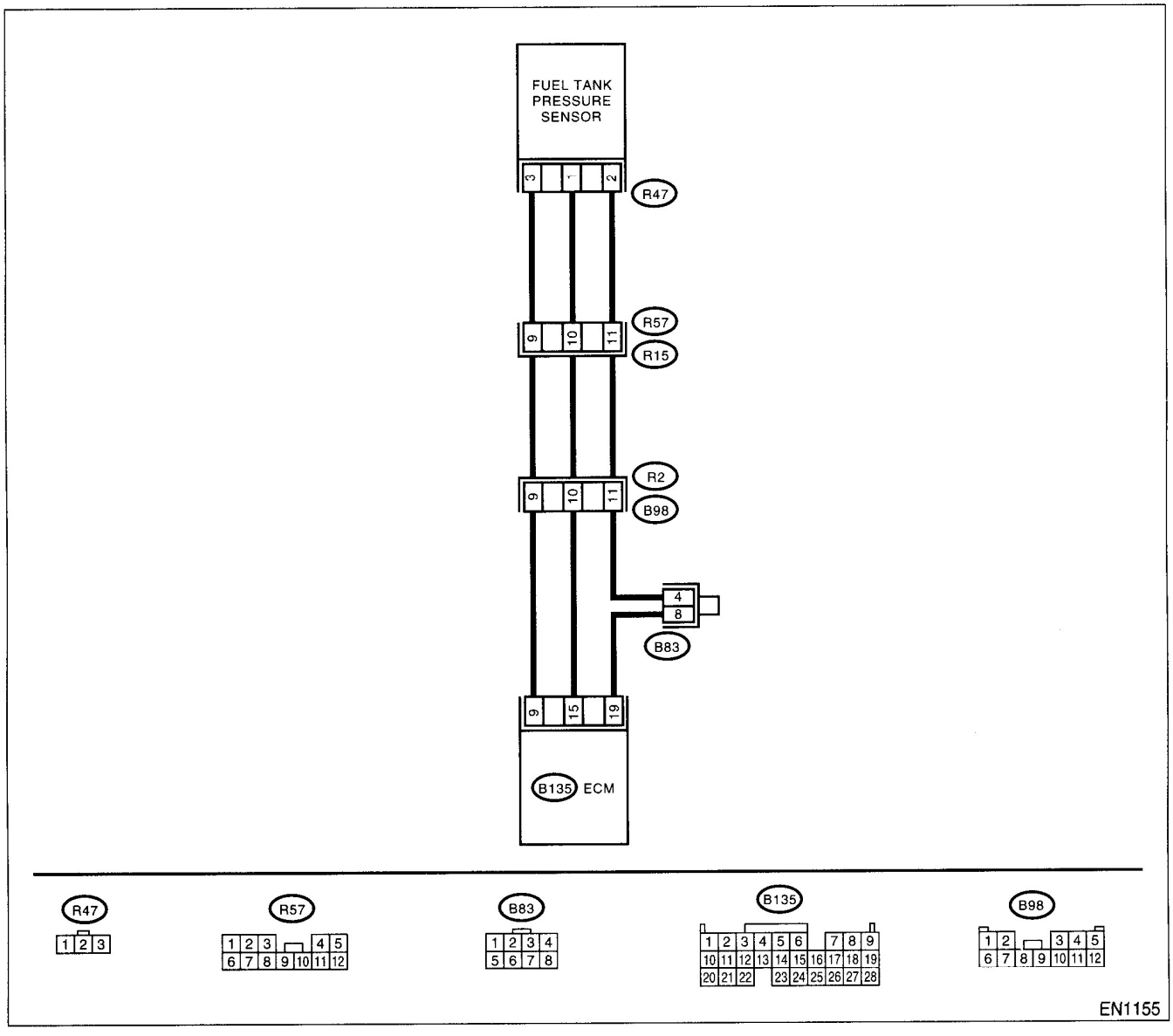

GETtheMANUALS.org

	Step	Check	Yes	No
1	**CHECK CURRENT DATA.** 1)Turn the ignition switch to OFF. 2)Remove the fuel filler cap. 3)Install the fuel filler cap. 4)Turn the ignition switch to ON. 5)Read the data of fuel tank pressure sensor signal using Subaru Select Monitor or OBD-II general scan tool. NOTE: •Subaru Select Monitor For detailed operation procedure, refer to the "READ CURRENT DATA FOR ENGINE". <Ref. to EN(DOHC TURBO)-38, Subaru Select Monitor.> •OBD-II general scan tool For detailed operation procedures, refer to the OBD-II General Scan Tool Instruction Manual.	Is the value more than 2.8 kPa (21.0 mmHg, 0.827 inHg)?	Go to step **12.**	Go to step **2.**
2	**CHECK POWER SUPPLY TO FUEL TANK PRESSURE SENSOR.** Measure the voltage between ECM connector and chassis ground. ***Connector & terminal*** ***(B135) No. 9 (+) — Chassis ground (–):***	Is the voltage more than 4.5 V?	Go to step **4.**	Go to step **3.**
3	**CHECK POWER SUPPLY TO FUEL TANK PRESSURE SENSOR.** Measure the voltage between ECM connector and chassis ground. ***Connector & terminal*** ***(B135) No. 9 (+) — Chassis ground (–):***	Does the voltage change more than 4.5 V by shaking harness and connector of ECM while monitoring the value with voltage meter?	Repair poor contact in ECM connector.	Replace the ECM. <Ref. to FU(DOHC TURBO)-47, Engine Control Module.>
4	**CHECK INPUT SIGNAL FOR ECM.** Measure the voltage between ECM and chassis ground. ***Connector & terminal*** ***(B135) No. 15 (+) — Chassis ground (–):***	Is the voltage less than 0.2 V?	Go to step **6.**	Go to step **5.**
5	**CHECK INPUT SIGNAL FOR ECM. (USING SUBARU SELECT MONITOR.)** Read the data of fuel tank pressure sensor signal using Subaru Select Monitor. NOTE: •Subaru Select Monitor For detailed operation procedure, refer to the "READ CURRENT DATA FOR ENGINE". <Ref. to EN(DOHC TURBO)-38, Subaru Select Monitor.>	Does the value change more than –2.8 kPa (–21.0 mmHg, –0.827 inHg) by shaking harness and connector of ECM while monitoring the value with Subaru Select Monitor?	Repair poor contact in ECM connector.	Go to step **6.**
6	**CHECK HARNESS BETWEEN ECM AND COUPLING CONNECTOR IN REAR WIRING HARNESS.** 1)Turn the ignition switch to OFF. 2)Remove the rear seat cushion (Sedan) or move rear seat cushion (Wagon). 3)Separate rear wiring harness and fuel tank cord. 4)Turn the ignition switch to ON. 5)Measure the voltage between rear wiring harness connector and chassis ground. ***Connector & terminal*** ***(R15) No. 9 (+) — Chassis ground (–):***	Is the voltage more than 4.5 V?	Go to step **7.**	Repair harness and connector. NOTE: In this case, repair the following: • Open circuit in harness between ECM and rear wiring harness connector • Poor contact in coupling connector

GETtheMANUALS.org

	Step	Check	Yes	No
7	**CHECK HARNESS BETWEEN ECM AND COUPLING CONNECTOR IN REAR WIRING HARNESS.** 1)Turn the ignition switch to OFF. 2)Disconnect the connector from ECM. 3)Measure the resistance of harness between ECM and rear wiring harness connector. ***Connector & terminal (B135) No. 15 — (R15) No. 10:***	Is the resistance less than 1 Ω?	Go to step **8.**	Repair harness and connector. NOTE: In this case, repair the following: • Open circuit in harness between ECM and rear wiring harness connector • Poor contact in coupling connector
8	**CHECK HARNESS BETWEEN ECM AND COUPLING CONNECTOR IN REAR WIRING HARNESS.** Measure the resistance of harness between rear wiring harness connector and chassis ground. ***Connector & terminal (B135) No. 9 — (R15) No. 9:***	Is the resistance less than 1 Ω?	Go to step **9.**	Repair ground short circuit in harness between ECM and rear wiring harness connector.
9	**CHECK FUEL TANK CORD.** 1)Disconnect the connector from fuel tank pressure sensor. 2)Measure the resistance of fuel tank cord. ***Connector & terminal (R57) No. 11 — (R47) No. 2:***	Is the resistance less than 1 Ω?	Go to step **10.**	Repair open circuit in fuel tank cord.
10	**CHECK FUEL TANK CORD.** Measure the resistance of fuel tank cord. ***Connector & terminal (R57) No. 10 — (R47) No. 1:***	Is the resistance less than 1 Ω?	Go to step **11.**	Repair open circuit in fuel tank cord.
11	**CHECK POOR CONTACT.** Check poor contact in fuel tank pressure sensor connector.	Is there poor contact in fuel tank pressure sensor connector?	Repair poor contact in fuel tank pressure sensor connector.	Replace the fuel tank pressure sensor. <Ref. to EC(DOHC TURBO)-11, Fuel Tank Pressure Sensor.>
12	**CHECK HARNESS BETWEEN ECM AND FUEL TANK PRESSURE SENSOR CONNECTOR.** 1)Turn the ignition switch to OFF. 2)Disconnect the connector from fuel tank pressure sensor. 3)Turn the ignition switch to ON. 4)Read the data of fuel tank pressure sensor signal using Subaru Select Monitor or the OBD-II general scan tool. NOTE: •Subaru Select Monitor For detailed operation procedure, refer to the "READ CURRENT DATA FOR ENGINE". <Ref. to EN(DOHC TURBO)-38, Subaru Select Monitor.> •OBD-II general scan tool For detailed operation procedures, refer to the OBD-II General Scan Tool Instruction Manual.	Is the value more than 2.8 kPa (21.0 mmHg, 0.827 inHg)?	Repair battery short circuit in harness between ECM and fuel tank pressure sensor connector.	Replace the fuel tank pressure sensor. <<Ref. to EC(DOHC TURBO)-11, Fuel Tank Pressure Sensor.>

GETtheMANUALS.org

BA:DTC P0461 — FUEL LEVEL SENSOR CIRCUIT RANGE/PERFORMANCE PROBLEM —

- **DTC DETECTING CONDITION:**
  - Two consecutive driving cycles with fault

CAUTION:
After repair or replacement of faulty parts, conduct Clear Memory Mode <Ref. to EN(DOHC TURBO)-49, OPERATION, Clear Memory Mode.> and Inspection Mode <Ref. to EN(DOHC TURBO)-46, Inspection Mode.>.

GETtheMANUALS.org

- **WIRING DIAGRAM:**

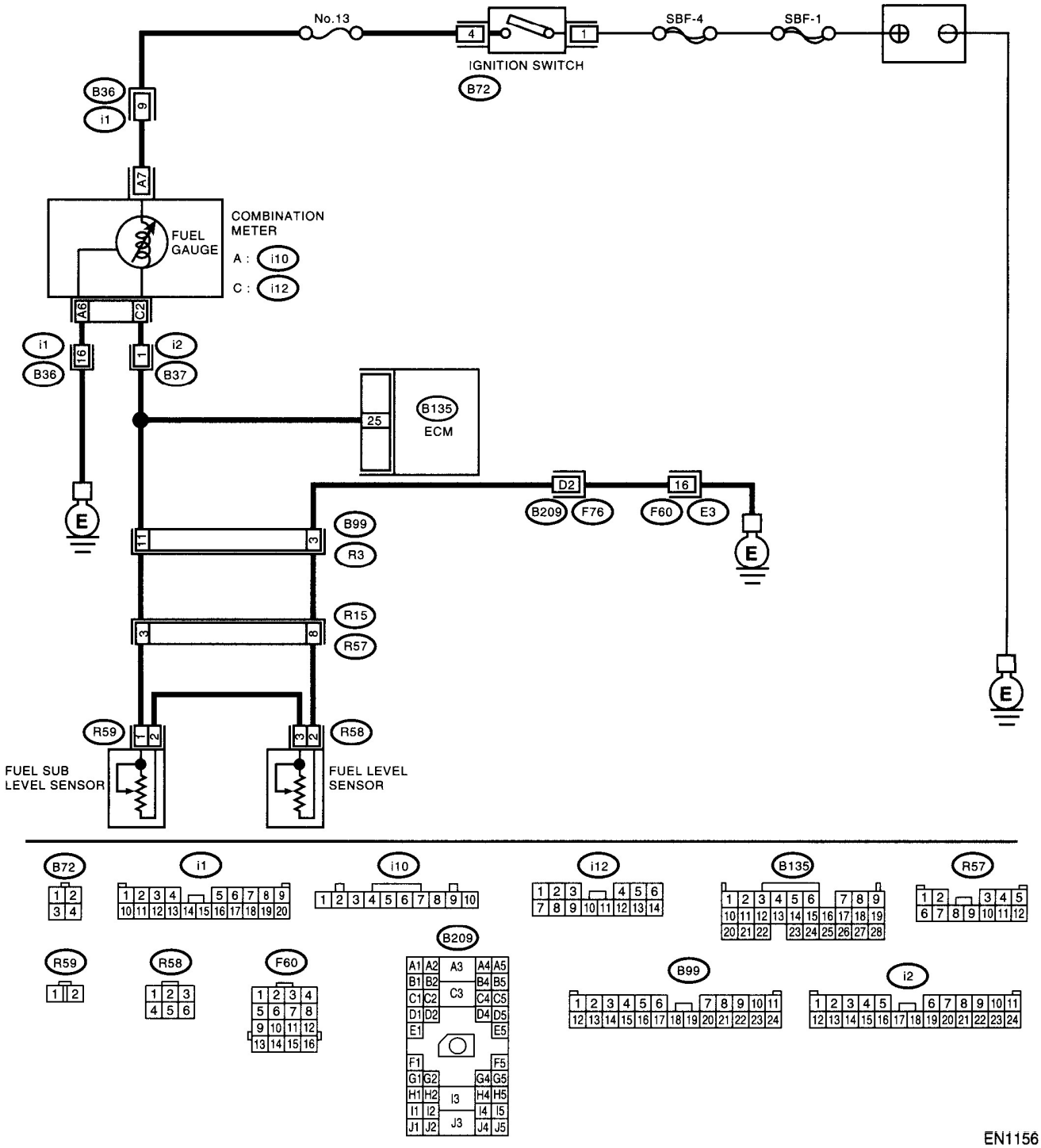

EN1156

GETtheMANUALS.org

Step		Check	Yes	No
1	**CHECK ANY OTHER DTC ON DISPLAY.**	Does the Subaru Select Monitor or OBD-II general scan tool indicate DTC P0462 or P0463?	Inspect DTC P0462 or P0463 using "List of Diagnostic Trouble Code (DTC)". <Ref. to EN(DOHC TURBO)-80, List of Diagnostic Trouble Code (DTC).> NOTE: In this case, it is not necessary to inspect this trouble.	Replace the fuel level sensor <Ref. to FU(DOHC TURBO)-62, Fuel Level Sensor.> and fuel sub level sensor <Ref. to FU(DOHC TURBO)-63, Fuel Sub Level Sensor.>

GETtheMANUALS.org

BB:DTC P0462 — FUEL LEVEL SENSOR CIRCUIT LOW INPUT —

- **DTC DETECTING CONDITION:**
  - Two consecutive driving cycles with fault

CAUTION:
After repair or replacement of faulty parts, conduct Clear Memory Mode <Ref. to EN(DOHC TURBO)-49, OPERATION, Clear Memory Mode.> and Inspection Mode <Ref. to EN(DOHC TURBO)-46, Inspection Mode.>.

- **WIRING DIAGRAM:**

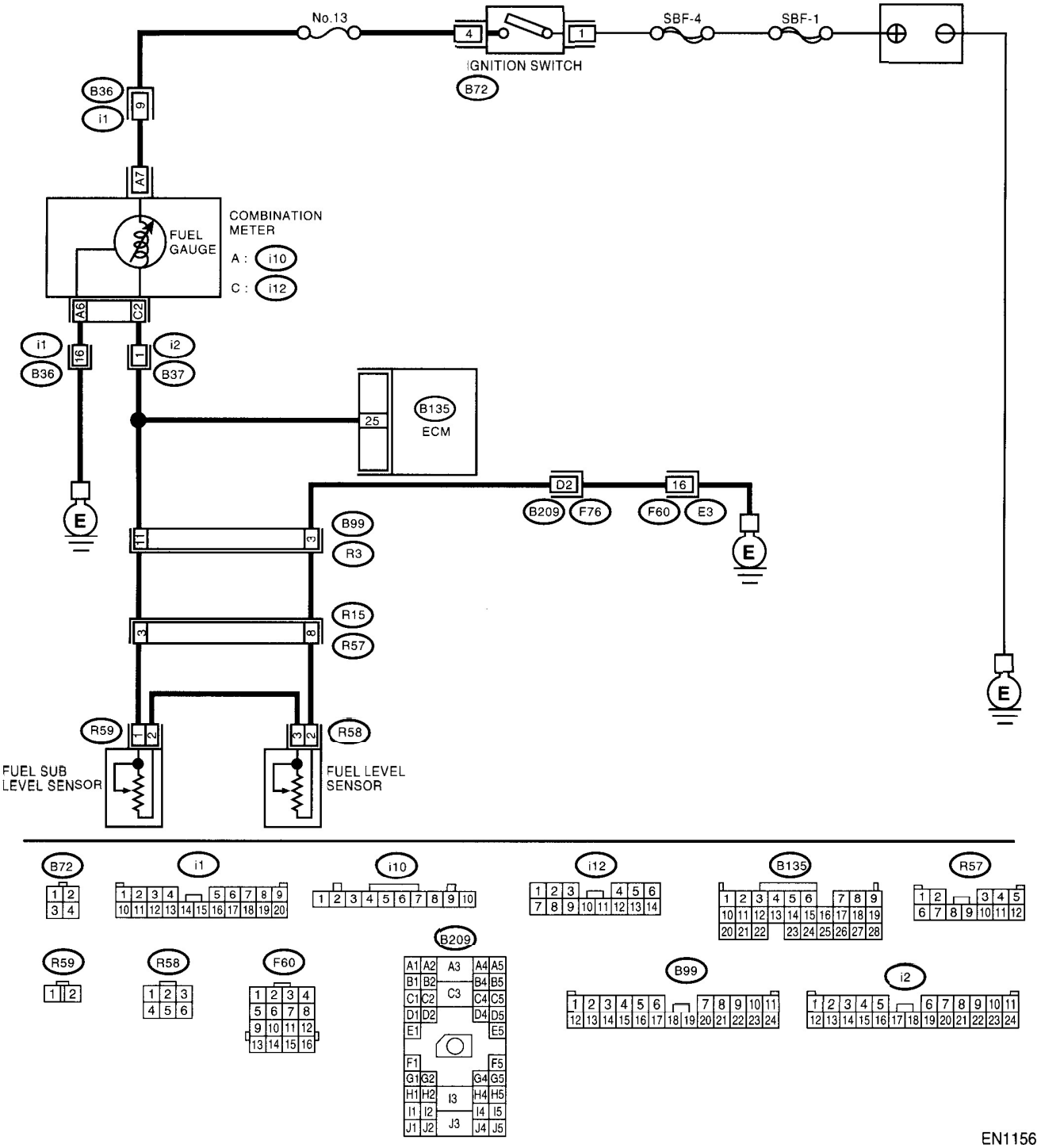

EN1156

GETtheMANUALS.org

	Step	Check	Yes	No
1	**CHECK SPEEDOMETER AND TACHOMETER OPERATION IN COMBINATION METER.**	Does the speedometer and tachometer operate normally?	Go to step **2.**	Repair or replace the combination meter. <Ref. to IDI-4, Combination Meter System.>
2	**CHECK INPUT SIGNAL FOR ECM.** 1)Turn the ignition switch to ON. (Engine OFF) 2)Measure the voltage between ECM connector and chassis ground. ***Connector & terminal*** ***(B135) No. 25 (+) — Chassis ground (–):***	Is the voltage less than 0.12 V?	Go to step **6.**	Go to step **3.**
3	**CHECK INPUT SIGNAL FOR ECM. (USING SUBARU SELECT MONITOR.)** Read the data of fuel level sensor signal using Subaru Select Monitor. NOTE: •Subaru Select Monitor For detailed operation procedure, refer to the "READ CURRENT DATA FOR ENGINE". <Ref. to EN(DOHC TURBO)-38, Subaru Select Monitor.>	Does the value change less than 0.12 V by shaking harness and connector of ECM while monitoring the value with Subaru Select Monitor?	Repair poor contact in ECM connector.	Even if MIL lights up, the circuit has returned to a normal condition at this time. A temporary poor contact of the connector may be the cause. NOTE: In this case, repair the following: • Poor contact in combination meter connector • Poor contact in ECM connector • Poor contact in coupling connectors
4	**CHECK INPUT VOLTAGE OF ECM.** 1)Turn the ignition switch to OFF. 2)Separate fuel tank cord connector (R57) and rear wiring harness connector (R15). 3)Turn the ignition switch to ON. 4)Measure the voltage of harness between ECM connector and chassis ground. ***Connector & terminal*** ***(B135) No. 25 (+) — Chassis ground (–):***	Is the voltage more than 0.12 V?	Go to step **4.**	Go to step **7.**
5	**CHECK HARNESS BETWEEN ECM AND COMBINATION METER.** 1)Turn the ignition switch to OFF. 2)Disconnect the connector from connector (i10), (i12) and ECM connector. 3)Measure the resistance between ECM and chassis ground. ***Connector & terminal*** ***(B135) No. 25 — Chassis ground:***	Is the resistance more than 1 MΩ?	Go to step **6.**	Repair ground short circuit in harness between ECM and combination meter connector.
6	**CHECK HARNESS BETWEEN ECM AND COMBINATION METER.** Measure the resistance between ECM and combination meter connector. ***Connector & terminal*** ***(B135) No. 25 — (i12) No. 2:***	Is the resistance less than 10 Ω?	Repair or replace the combination meter. <Ref. to IDI-4, Combination Meter System.>	Repair open circuit between ECM and combination meter connector. NOTE: In this case, repair the following: Poor contact in coupling connector

GETtheMANUALS.org

	Step	Check	Yes	No
7	**CHECK FUEL TANK CORD.** 1)Turn the ignition switch to OFF. 2)Disconnect the connector from fuel sub level sensor. 3)Measure the resistance between fuel sub level sensor and chassis ground. ***Connector & terminal*** ***(R59) No. 1 — Chassis ground:***	Is the resistance more than 1 MΩ?	Go to step **8.**	Repair ground short circuit in fuel tank cord.
8	**CHECK FUEL TANK CORD.** 1)Disconnect the connector from fuel pump assembly. 2)Measure the resistance between fuel pump assembly and chassis ground. ***Connector & terminal*** ***(R59) No. 2 — Chassis ground:***	Is the resistance more than 1 MΩ?	Go to step **9.**	Repair ground short circuit in fuel tank cord.
9	**CHECK FUEL LEVEL SENSOR.** 1)Remove the fuel pump assembly. <Ref. to FU(DOHC TURBO)-60, Fuel Pump.> 2)Measure the resistance between fuel level sensor and terminals with its float set to the full position. ***Terminals*** ***No. 2 — No. 3:***	Is the resistance between 0.5 and 2.5 Ω?	Go to step **10.**	Replace the fuel level sensor.
10	**CHECK FUEL SUB LEVEL SENSOR.** 1)Remove the fuel sub level sensor. <Ref. to FU(DOHC TURBO)-63, Fuel Sub Level Sensor.> 2)Measure the resistance between fuel sub level sensor and terminals with its float set to the full position. ***Terminals*** ***No. 1 — No. 2:***	Is the resistance between 0.5 and 2.5 Ω?	Repair poor contact in harness between ECM and combination meter connector.	Replace the fuel sub level sensor.

GETtheMANUALS.org

GETtheMANUALS.org

BC:DTC P0463 — FUEL LEVEL SENSOR CIRCUIT HIGH INPUT —

- **DTC DETECTING CONDITION:**
  - Two consecutive driving cycles with fault

CAUTION:
After repair or replacement of faulty parts, conduct Clear Memory Mode <Ref. to EN(DOHC TURBO)-49, OPERATION, Clear Memory Mode.> and Inspection Mode <Ref. to EN(DOHC TURBO)-46, Inspection Mode.>.

- **WIRING DIAGRAM:**

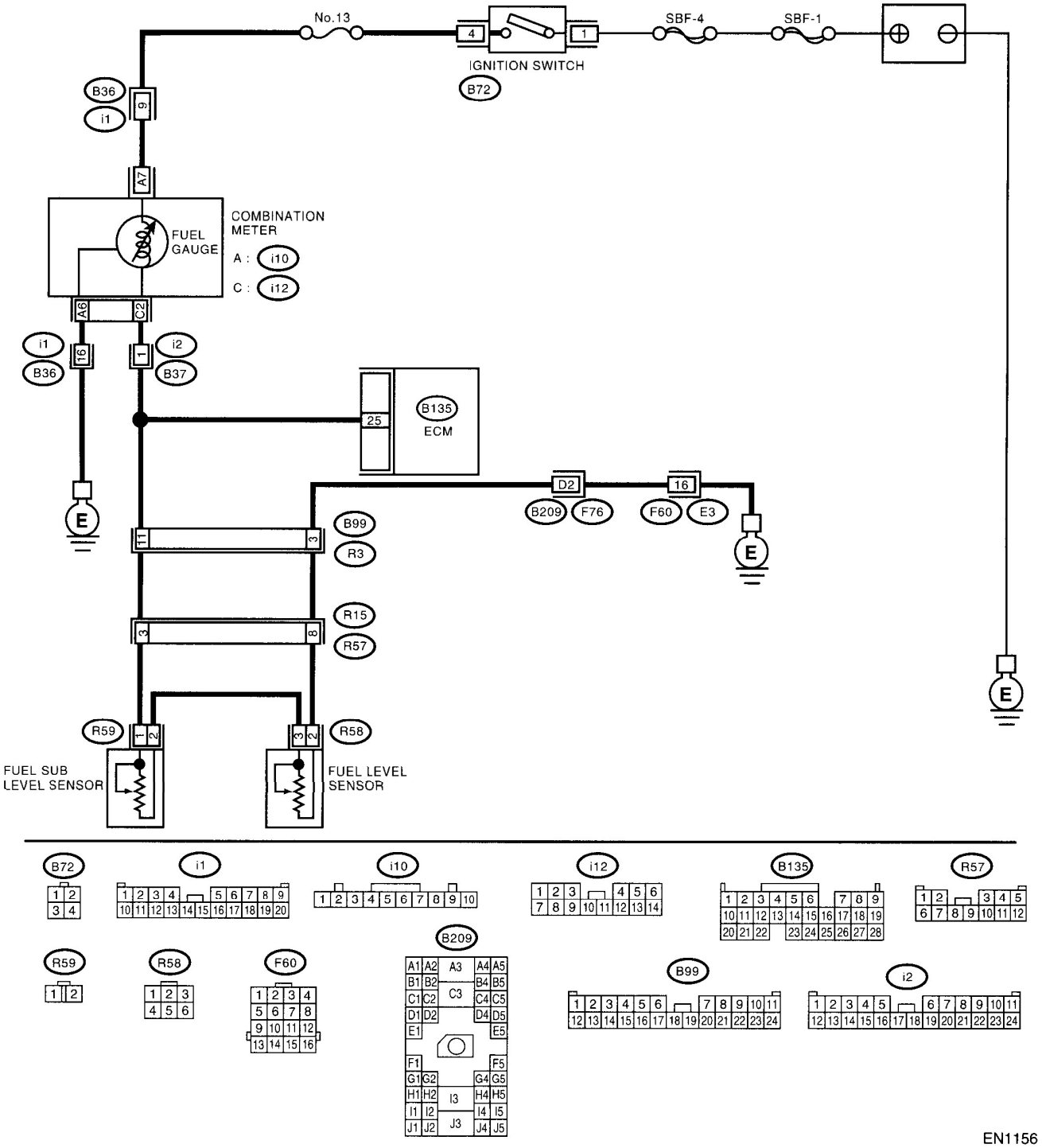

EN1156

GETtheMANUALS.org

	Step	Check	Yes	No
1	**CHECK SPEEDOMETER AND TACHOMETER OPERATION IN COMBINATION METER.**	Does the speedometer and tachometer operate normally?	Go to step **2.**	Repair or replace the combination meter. <Ref. to IDI-4, Combination Meter System.>
2	**CHECK INPUT SIGNAL FOR ECM.** 1)Turn the ignition switch to ON. (Engine OFF) 2)Measure the voltage between ECM connector and chassis ground. ***Connector & terminal*** ***(B135) No. 25 (+) — Chassis ground (–):***	Is the voltage more than 4.75 V?	Go to step **3.**	Even if MIL lights up, the circuit has returned to a normal condition at this time. A temporary poor contact of the connector may be the cause. NOTE: In this case, repair the following: • Poor contact in fuel pump connector • Poor contact in coupling connector
3	**CHECK INPUT VOLTAGE OF ECM.** 1)Turn the ignition switch to OFF. 2)Disconnect the combination meter connector (i10) and ECM connector. 3)Turn the ignition switch to ON. 4)Measure the voltage of harness between ECM and chassis ground. ***Connector & terminal*** ***(B135) No. 25 (+) — Chassis ground (–):***	Is the voltage more than 4.75 V?	Go to step **4.**	Repair battery short circuit between ECM and combination meter connector.
4	**CHECK HARNESS BETWEEN ECM AND FUEL TANK CORD.** 1)Turn the ignition switch to OFF. 2)Separate fuel tank cord connector (R57) and rear wiring harness connector (R15). 3)Measure the resistance between ECM and fuel tank cord. ***Connector & terminal*** ***(B135) No. 25 — (R15) No. 2:***	Is the resistance less than 5 Ω?	Go to step **5.**	Repair open circuit between ECM and fuel tank cord.
5	**CHECK HARNESS BETWEEN FUEL TANK CORD AND CHASSIS GROUND.** Measure the resistance between fuel tank cord and chassis ground. ***Connector & terminal*** ***(R15) No. 8 — Chassis ground:***	Is the resistance less than 5 Ω?	Go to step **6.**	Repair open circuit between fuel tank cord and chassis ground. NOTE: In this case, repair the following: Poor contact in coupling connectors
6	**CHECK FUEL TANK CORD.** 1)Disconnect the connector from fuel level sensor. 2)Measure the resistance between fuel level sensor and coupling connector. ***Connector & terminal*** ***(R57) No. 8 — (R58) No. 2:***	Is the resistance less than 10 Ω?	Go to step **7.**	Repair open circuit between coupling connector and fuel level sensor.

GETtheMANUALS.org

	Step	Check	Yes	No
7	**CHECK FUEL TANK CORD.** 1)Disconnect the connector from fuel sub level sensor. 2)Measure the resistance between fuel level sensor and fuel sub level sensor. ***Connector & terminal*** ***(R58) No. 3 — (R59) No. 2:***	Is the resistance less than 10 Ω?	Go to step **8.**	Repair open circuit between fuel level sensor and fuel sub level sensor.
8	**CHECK FUEL TANK CORD.** Measure the resistance between fuel sub level sensor and coupling connector. ***Connector & terminal*** ***(R57) No. 3 — (R59) No. 1:***	Is the resistance less than 10 Ω?	Go to step **9.**	Repair open circuit between coupling connector and fuel sub level sensor.
9	**CHECK FUEL LEVEL SENSOR.** 1)Remove the fuel pump assembly. <Ref. to FU(DOHC TURBO)-60, Fuel Pump.> 2)While moving the fuel level sensor float up and down, measure resistance between fuel level sensor terminals. ***Terminals*** ***No. 2 — No. 3:***	Is the resistance more than 53 Ω?	Replace the fuel level sensor. <Ref. to FU(DOHC TURBO)-62, Fuel Level Sensor.>	Go to step **10.**
10	**CHECK FUEL SUB LEVEL SENSOR.** 1)Remove the fuel sub level sensor. <Ref. to FU(DOHC TURBO)-63, Fuel Sub Level Sensor.> 2)While moving the fuel sub level sensor float up and down, measure resistance between fuel sub level sensor terminals. ***Terminals*** ***No. 1 — No. 2:***	Is the resistance more than 45 Ω?	Replace the fuel sub level sensor. <Ref. to FU(DOHC TURBO)-63, Fuel Sub Level Sensor.>	Replace the combination meter. <Ref. to IDI-11, Combination Meter Assembly.>

GETtheMANUALS.org

GETtheMANUALS.org

BD:DTC P0464 — FUEL LEVEL SENSOR INTERMITTENT INPUT—

- **DTC DETECTING CONDITION:**
  - Two consecutive driving cycles with fault

CAUTION:
After repair or replacement of faulty parts, conduct Clear Memory Mode <Ref. to EN(DOHC TURBO)-49, OPERATION, Clear Memory Mode.> and Inspection Mode <Ref. to EN(DOHC TURBO)-46, Inspection Mode.>.

- **WIRING DIAGRAM:**

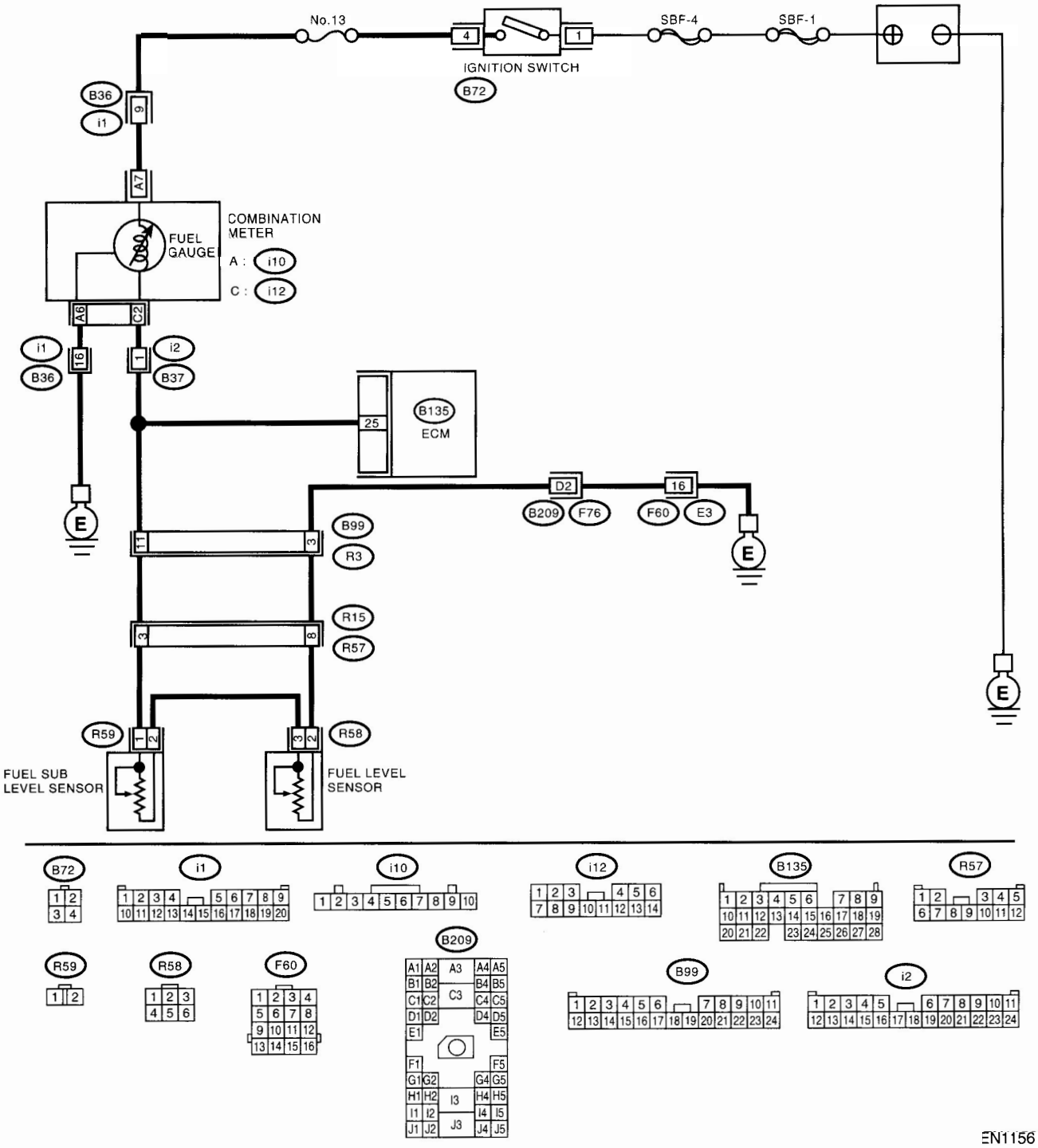

EN1156

GETtheMANUALS.org

	Step	Check	Yes	No
1	**CHECK ANY OTHER DTC ON DISPLAY.**	Does the Subaru Select Monitor or OBD-II general scan tool indicate DTC P0462 or P0463?	Inspect DTC P0462 or P0463 using "List of Diagnostic Trouble Code (DTC)". <Ref. to EN(DOHC TURBO)-80, List of Diagnostic Trouble Code (DTC).>	Go to step **2.**
2	**CHECK FUEL LEVEL SENSOR.** 1)Remove the fuel pump assembly. <Ref. to FU(DOHC TURBO)-60, Fuel Pump.> 2)While moving the fuel level sensor float up and down, make sure that the resistance between fuel level sensor terminals changes smoothly. ***Terminals*** ***No. 2 — No. 3:***	Does the resistance change smoothly between approx. 0.5 Ω and approx. 52 Ω?	Go to step **3.**	Replace the fuel level sensor. <Ref. to FU(DOHC TURBO)-62, Fuel Level Sensor.>
3	**CHECK FUEL SUB LEVEL SENSOR.** 1)Remove the fuel sub level sensor. <Ref. to FU(DOHC TURBO)-63, Fuel Sub Level Sensor.> 2)While moving the fuel sub level sensor float up and down, make sure that the resistance between fuel level sensor terminals changes smoothly. ***Terminals*** ***No. 1 — No. 2:***	Does the resistance change smoothly between approx. 0.5 Ω and approx. 44 Ω?	Repair poor contact in ECM, combination meter and coupling connectors.	Replace the fuel sub level sensor. <Ref. to FU(DOHC TURBO)-63, Fuel Sub Level Sensor.>

GETtheMANUALS.org

GETtheMANUALS.org

BE:DTC P0480 — COOLING FAN RELAY 1 CIRCUIT LOW INPUT —

- **DTC DETECTING CONDITION:**
  - Two consecutive driving cycles with fault
- **TROUBLE SYMPTOM:**
  - Radiator fan does not operate properly.
  - Overheating

CAUTION:
After repair or replacement of faulty parts, conduct Clear Memory Mode <Ref. to EN(DOHC TURBO)-49, OPERATION, Clear Memory Mode.> and Inspection Mode <Ref. to EN(DOHC TURBO)-46, Inspection Mode.>.

GETtheMANUALS.org

- **WIRING DIAGRAM:**

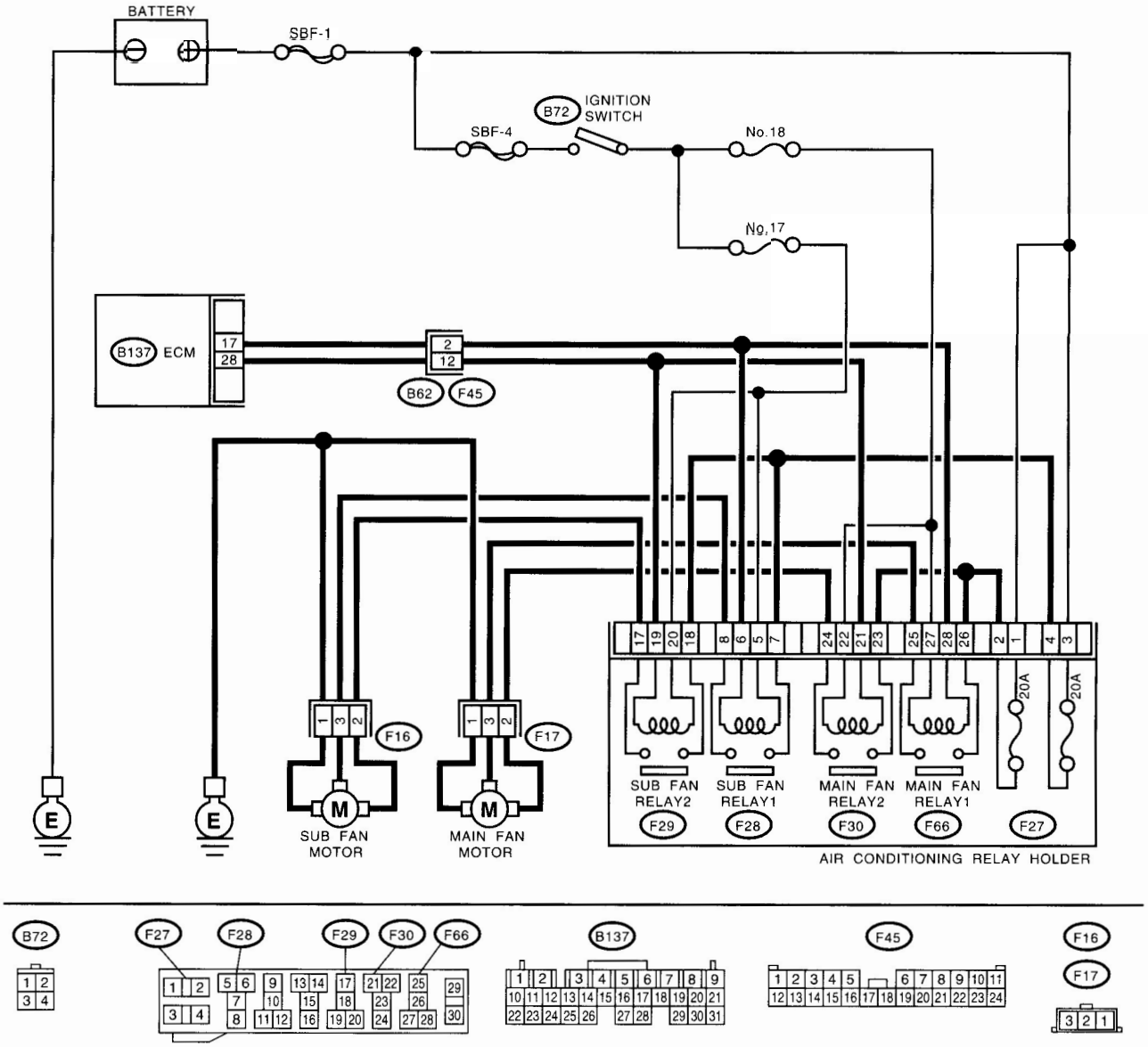

EN1157

GETtheMANUALS.org

	Step	Check	Yes	No
1	**CHECK OUTPUT SIGNAL FROM ECM.** 1)Turn the ignition switch to OFF. 2)Connect the test mode connector at the lower portion of instrument panel (on the driver's side), to the side of the center console box. 3)Turn the ignition switch to ON. 4)While operating the radiator fan relay, measure voltage between ECM terminal and ground. NOTE: Radiator fan relay operation can be executed using Subaru Select Monitor. For procedure, refer to "Compulsory Valve Operation Check Mode".<Ref. to EN(DOHC TURBO)-38, Subaru Select Monitor.> ***Connector & terminal*** ***(B137) No. 17 (+) — Chassis ground (–):*** ***(B137) No. 28 (+) — Chassis ground (–):***	Does the voltage change between 0 and 10 V?	Repair poor contact in ECM connector.	Go to step **2.**
2	**CHECK GROUND SHORT CIRCUIT IN RADIATOR MAIN FAN RELAY CONTROL CIRCUIT.** 1)Turn the ignition switch to OFF. 2)Disconnect the connectors from ECM. 3)Measure the resistance of harness between ECM connector and chassis ground. ***Connector & terminal*** ***(B137) No. 17 — Chassis ground:*** ***(B137) No. 28 — Chassis ground:***	Is the resistance less than 10 Ω?	Repair ground short circuit in radiator main fan relay control circuit.	Go to step **3.**
3	**CHECK POWER SUPPLY FOR RELAY.** 1)Remove the main fan relay 1 and 2 from A/C relay holder. 2)Turn the ignition switch to ON. 3)Measure the voltage between fuse and relay box (F/B) connector and chassis ground. ***Connector & terminal*** ***(F66) No. 27 (+) — Chassis ground (–):*** ***(F30) No. 22 (+) — Chassis ground (–):***	Is the voltage more than 10 V?	Go to step **4.**	Repair open circuit in harness between ignition switch and fuse and relay box (F/B) connector.
4	**CHECK MAIN FAN RELAY.** 1)Turn the ignition switch to OFF. 2)Measure the resistance between main fan relay terminals. ***Terminal*** ***No. 27 — No. 28:(Main fan relay 1)*** ***No. 22 — No. 21:(Main fan relay 2)***	Is the resistance between 87 and 107 Ω?	Go to step **5.**	Replace the main fan relay.
5	**CHECK OPEN CIRCUIT IN MAIN FAN RELAY CONTROL CIRCUIT.** Measure the resistance of harness between ECM and main fan relay connector. ***Connector & terminal*** ***(B137) No. 17 — (F66) No. 28:*** ***(B137) No. 28 — (F30) No. 21:***	Is the resistance less than 1 Ω?	Go to step **6.**	Repair harness and connector. NOTE: In this case, repair the following: • Open circuit in harness between ECM and main fan relay connector • Poor contact in coupling connector
6	**CHECK POOR CONTACT.** Check poor contact in ECM or main fan relay connector.	Is there poor contact in ECM or main fan relay connector?	Repair poor contact in ECM or main fan relay connector.	Contact with SOA (distributor) service.

GETtheMANUALS.org

GETtheMANUALS.org

BF:DTC P0483 — COOLING FAN FUNCTION PROBLEM —

- **DTC DETECTING CONDITION:**
  - Two consecutive driving cycles with fault
- **TROUBLE SYMPTOM:**
  - Occurrence of noise
  - Overheating

CAUTION:
After repair or replacement of faulty parts, conduct Clear Memory Mode <Ref. to EN(DOHC TURBO)-49, OPERATION, Clear Memory Mode.> and Inspection Mode <Ref. to EN(DOHC TURBO)-46, Inspection Mode.>.

NOTE:
If the vehicle, with the engine idling, is placed very close to a wall or another vehicle, preventing normal cooling function, the OBD system may detect malfunction.

GETtheMANUALS.org

- **WIRING DIAGRAM:**

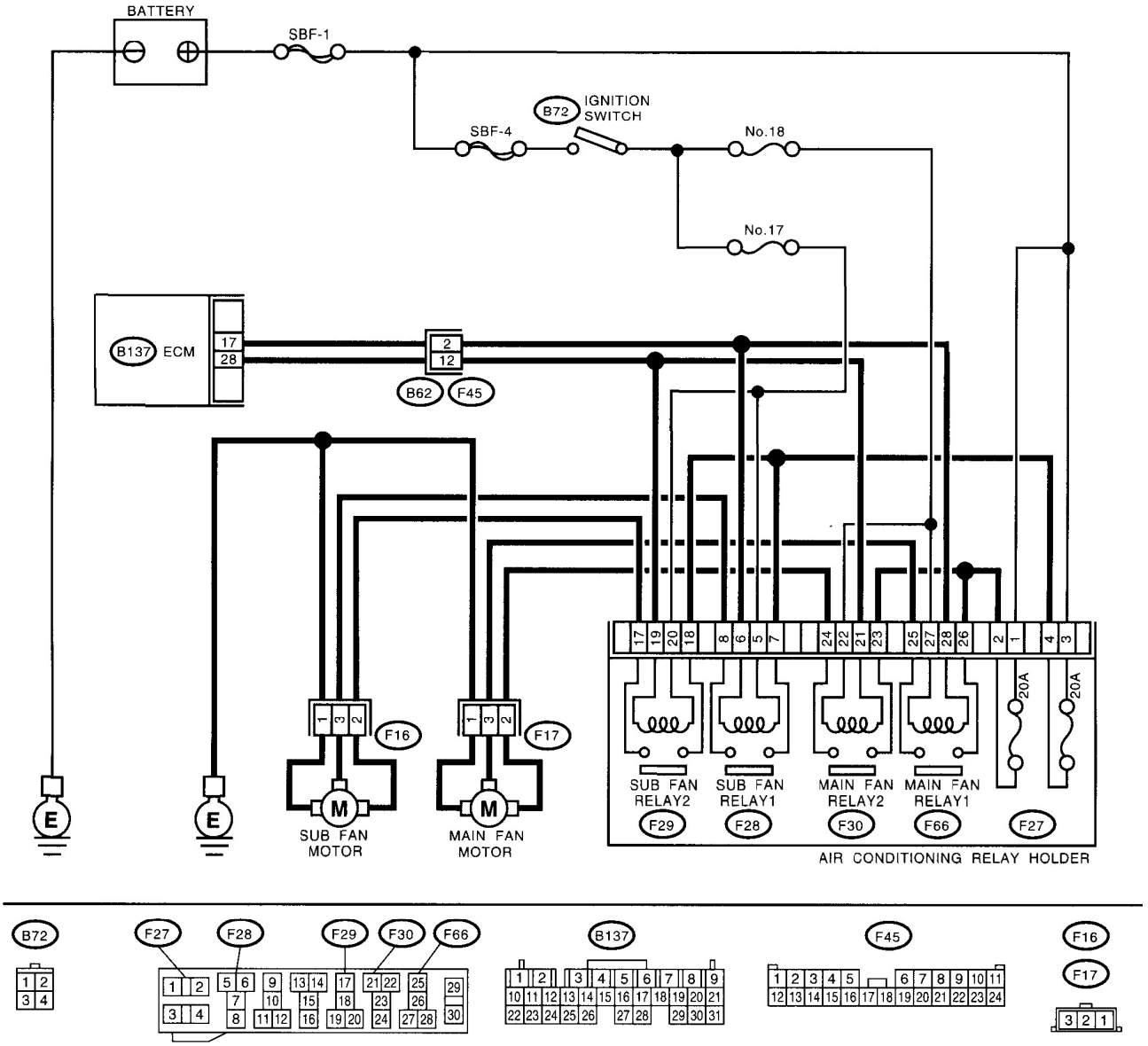

EN1157

GETtheMANUALS.org

Step		Check	Yes	No
1	CHECK ANY OTHER DTC ON DISPLAY.	Is there any other DTC on display?	Inspect the relevant DTC using "List of Diagnostic Trouble Code (DTC)". <Ref. to EN(DOHC TURBO)-80, List of Diagnostic Trouble Code (DTC).>	Check radiator fan, fan motor and thermostat. <Ref. to CO-9, Radiator Main Fan System.> and <Ref. to CO-17, Radiator Sub Fan System.> If thermostat is stuck, replace thermostat.

GETtheMANUALS.org

BG:DTC P0500 — VEHICLE SPEED SENSOR MALFUNCTION —

- **DTC DETECTING CONDITION:**
  - Immediately at fault recognition

CAUTION:
After repair or replacement of faulty parts, conduct Clear Memory Mode <Ref. to EN(DOHC TURBO)-49, OPERATION, Clear Memory Mode.> and Inspection Mode <Ref. to EN(DOHC TURBO)-46, Inspection Mode.>.

- **WIRING DIAGRAM:**

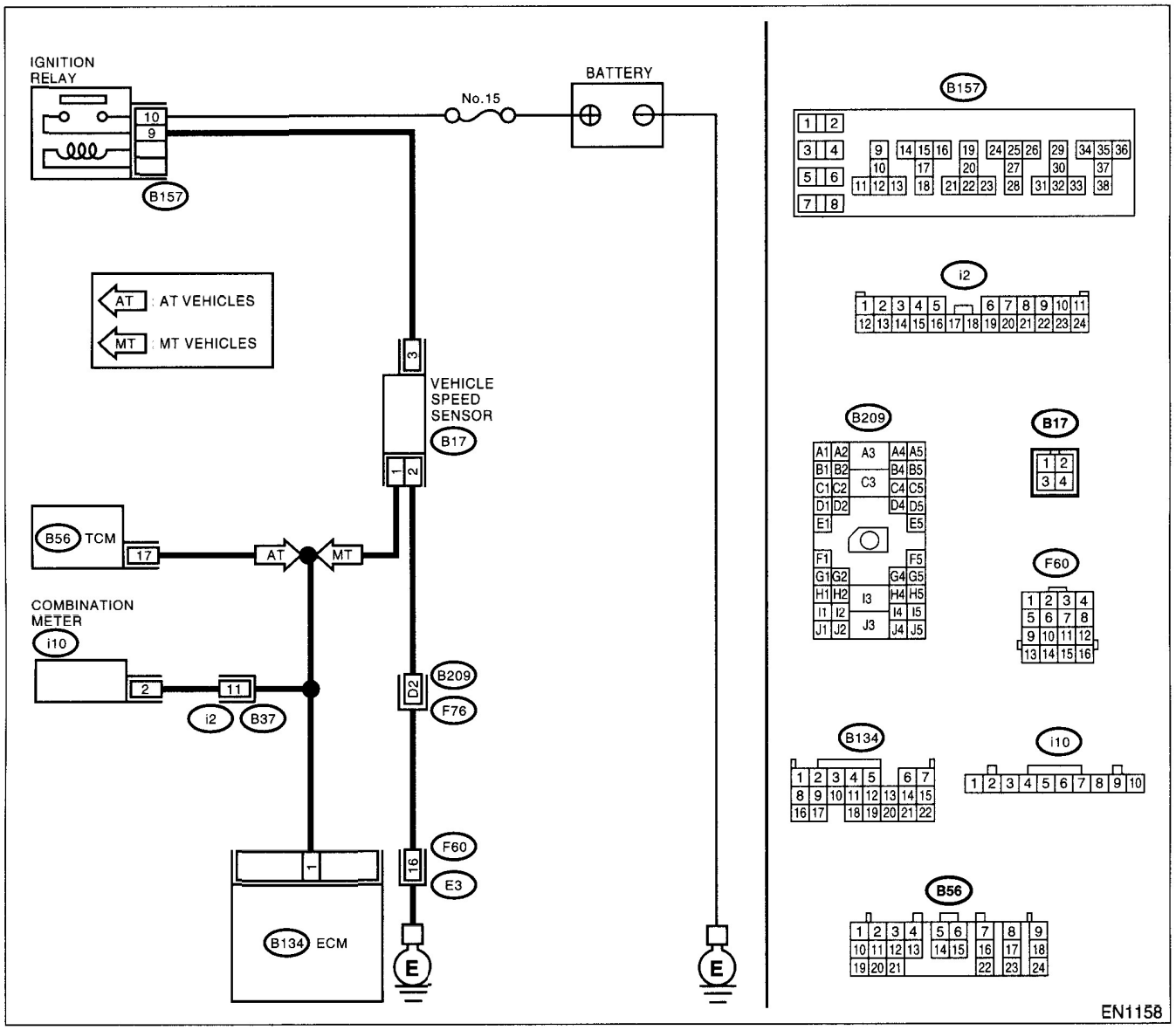

Step		Check	Yes	No
1	CHECK TRANSMISSION TYPE.	Is the transmission type AT?	Go to step **2.**	Go to step **3.**

GETtheMANUALS.org

	Step	Check	Yes	No
2	**CHECK DTC P0720 ON DISPLAY.**	Does the Subaru Select Monitor or OBD-II general scan tool indicate DTC P0720?	Check front vehicle speed sensor signal circuit. <Ref. to AT-57, DTC 33 FRONT VEHICLE SPEED SENSOR, Diagnostic Procedure with Diagnostic Trouble Code (DTC).>	Go to step **3.**
3	**CHECK SPEEDOMETER OPERATION IN COMBINATION METER.**	Does speedometer operate normally?	Go to step **4.**	Check speedometer and vehicle speed sensor. <Ref. to IDI-13, Speedometer.> and <Ref. to AT-32, Front Vehicle Speed Sensor.>
4	**CHECK HARNESS BETWEEN ECM AND COMBINATION METER CONNECTOR.** 1)Turn ignition switch to OFF. 2)Disconnect connector from combination meter. 3)Measure resistance between ECM and combination meter. ***Connector & terminal*** ***(B134) No. 1 — (i10) No. 2:***	Is the resistance less than 10 Ω?	Repair poor contact in ECM connector.	Repair harness and connector. NOTE: In this case, repair the following: • Open circuit in harness between ECM and combination meter connector • Poor contact in ECM connector • Poor contact in combination meter connector • Poor contact in coupling connector

GETtheMANUALS.org

BH:DTC P0506 — IDLE CONTROL SYSTEM RPM LOWER THAN EXPECTED —

- **DTC DETECTING CONDITION:**
  - Two consecutive driving cycles with fault
- **TROUBLE SYMPTOM:**
  - Engine is difficult to start.
  - Engine does not start.
  - Erroneous idling
  - Engine stalls.

CAUTION:
After repair or replacement of faulty parts, conduct Clear Memory Mode <Ref. to EN(DOHC TURBO)-49, OPERATION, Clear Memory Mode.> and Inspection Mode <Ref. to EN(DOHC TURBO)-46, Inspection Mode.>.

- **WIRING DIAGRAM:**

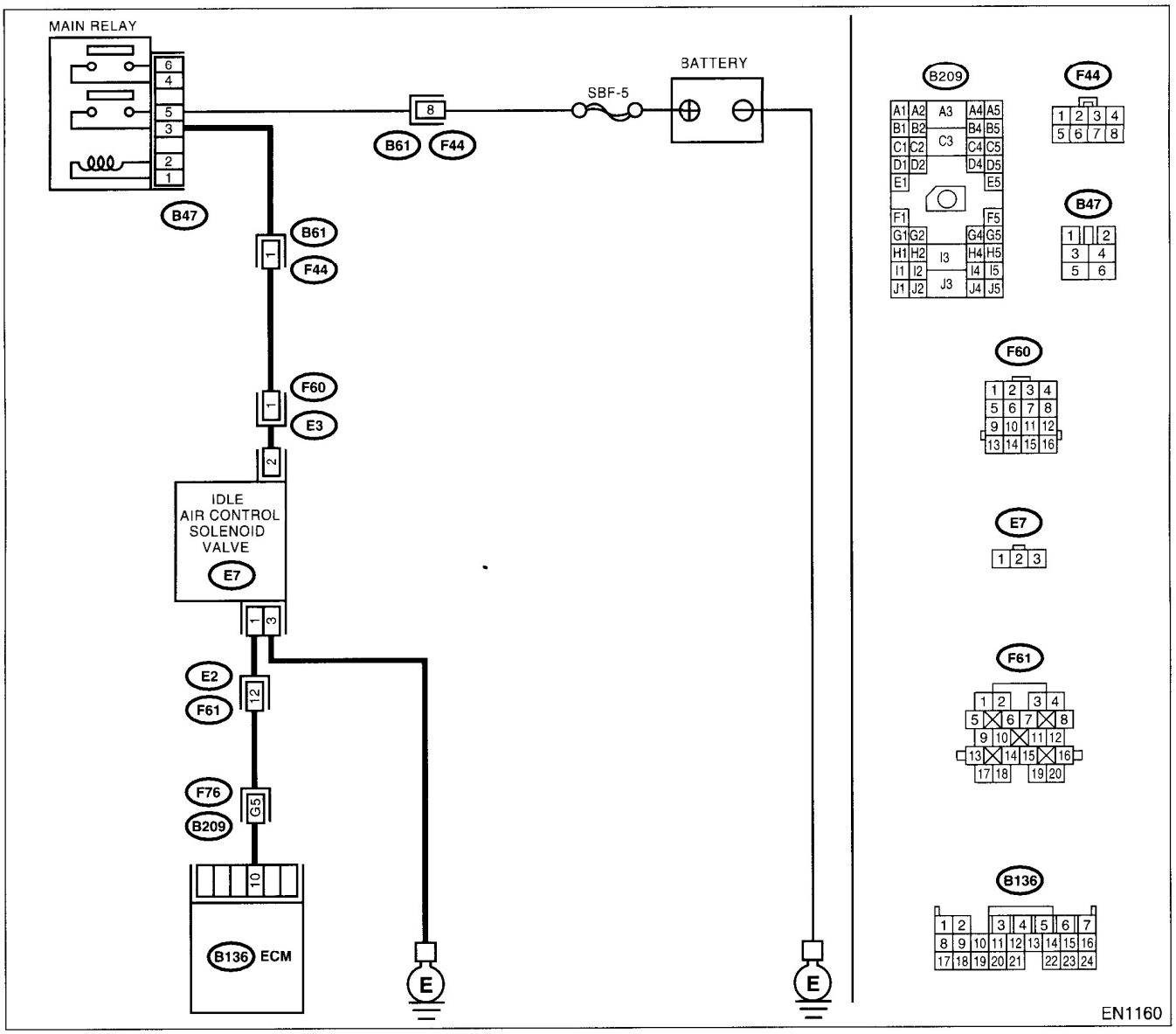

GETtheMANUALS.org

	Step	Check	Yes	No
1	**CHECK ANY OTHER DTC ON DISPLAY.**	Does the Subaru Select Monitor or OBD-II general scan tool indicate DTC P0508 or P509?	Inspect DTC P0505 or P1505 using "List of Diagnostic Trouble Code (DTC)". <Ref. to EN(DOHC TURBO)-80, List of Diagnostic Trouble Code (DTC).> NOTE: In this case, it is not necessary to inspect DTC P0506.	Go to step **2.**
2	**CHECK IDLE AIR CONTROL SOLENOID VALVE.** 1)Turn the ignition switch to OFF. 2)Remove the idle air control solenoid valve from throttle body. <Ref. to FU(DOHC TURBO)-36, REMOVAL, Idle Air Control Solenoid Valve.> 3)Using an air gun, force air into the idle air control solenoid valve by-pass air inlet. Confirm that forced air subsequently escapes from both main air passage and assist air passage.	Does air flow out?	Go to step **4.**	Replace the idle air control solenoid valve. <Ref. to FU(DOHC TURBO)-36, Idle Air Control Solenoid Valve.> After replace, Go to step **3.**
3	**CHECK IDLE AIR CONTROL SOLENOID VALVE DUTY RATIO.** 1)Turn the ignition switch to ON. 2)Start the engine, and warm-up the engine. 3)Turn all accessory switches to OFF. 4)Read the data of idle air control solenoid valve duty ratio using Subaru Select Monitor or OBD-II general scan tool. NOTE: •Subaru Select Monitor For detailed operation procedures, refer to the "READ CURRENT DATA FOR ENGINE". <Ref. to EN(DOHC TURBO)-38, Subaru Select Monitor.> •OBD-II general scan tool For detailed operation procedures, refer to the OBD-II General Scan Tool Instruction Manual.	Is the value more than 60%?	Go to step **4.**	END.
4	**CHECK BY-PASS AIR LINE.** 1)Turn the ignition switch to OFF. 2)Remove the idle air control solenoid valve from throttle body. <Ref. to FU(DOHC TURBO)-36, REMOVAL, Idle Air Control Solenoid Valve.> 3)Remove the throttle body to intake manifold. <Ref. to FU(DOHC TURBO)-14, REMOVAL, Throttle Body.> 4)Using an air gun, force air into the solenoid valve installation area and throttle valve interior. Confirm that forced air subsequently escapes from both these areas.	Does air flow out?	Replace the idle air control solenoid valve. <Ref. to FU(DOHC TURBO)-36, Idle Air Control Solenoid Valve.>	Replace the throttle body. <Ref. to FU(DOHC TURBO)-14, Throttle Body.>

GETtheMANUALS.org

BI: DTC P0507 — IDLE CONTROL SYSTEM RPM HIGHER THAN EXPECTED —

- **DTC DETECTING CONDITION:**
  - Two consecutive driving cycles with fault
- **TROUBLE SYMPTOM:**
  - Engine keeps running at higher revolution than specified idling revolution.

CAUTION:
After repair or replacement of faulty parts, conduct Clear Memory Mode <Ref. to EN(DOHC TURBO)-49, OPERATION, Clear Memory Mode.> and Inspection Mode <Ref. to EN(DOHC TURBO)-46, Inspection Mode.>.

- **WIRING DIAGRAM:**

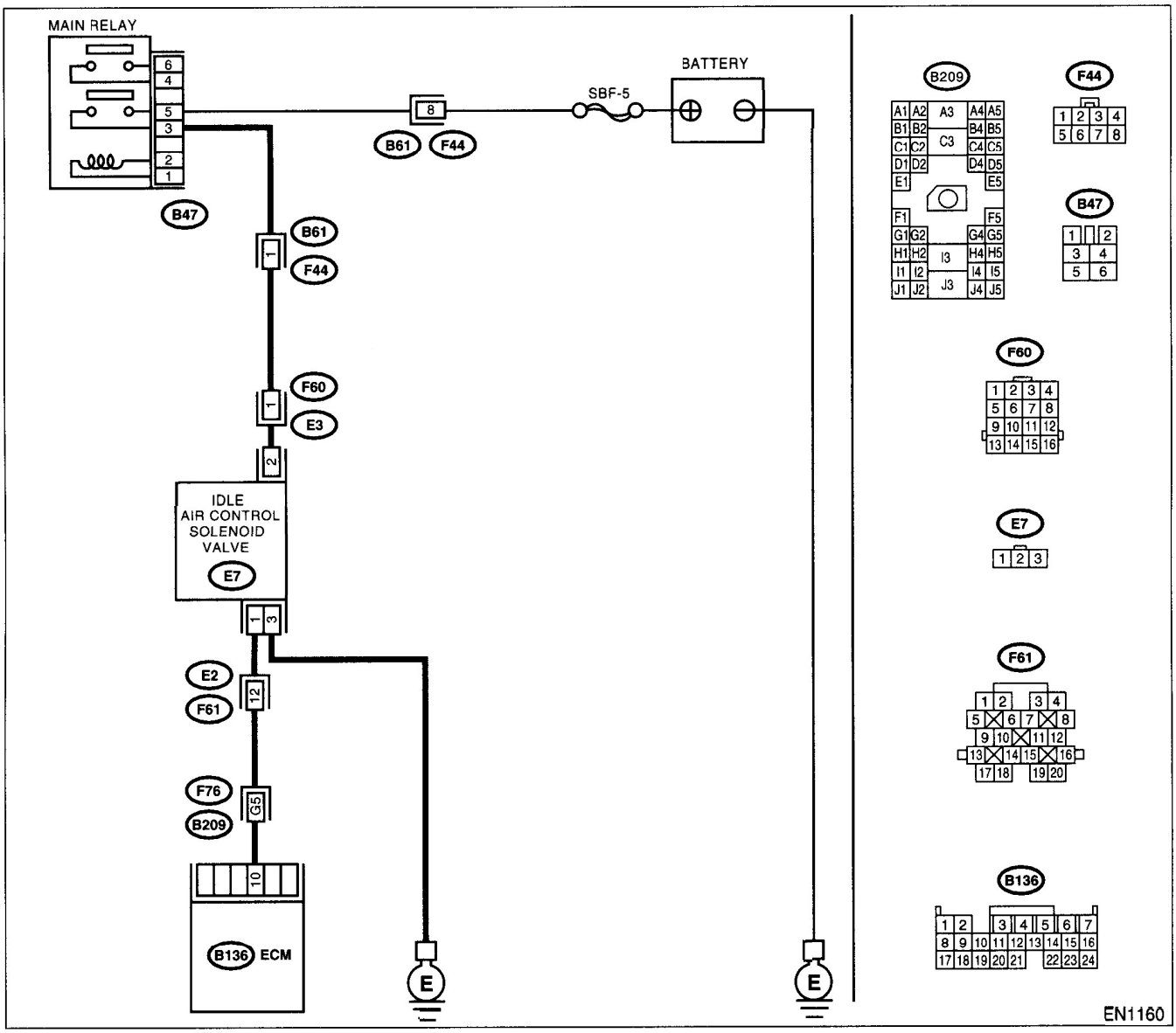

GETtheMANUALS.org

	Step	Check	Yes	No
1	**CHECK ANY OTHER DTC ON DISPLAY.**	Does the Subaru Select Monitor or OBD-II general scan tool indicate DTC P0508 or P0509?	Inspect DTC P0508 or P0509 using "List of Diagnostic Trouble Code (DTC)". <Ref. to EN(DOHC TURBO)-80, List of Diagnostic Trouble Code (DTC).> NOTE: In this case, it is not necessary to inspect DTC P0507.	Go to step **2.**
2	**CHECK THROTTLE CABLE.**	Does the throttle cable have play for adjustment?	Go to step **3.**	Adjust throttle cable. <Ref. to SP-7, INSTALLATION, Accelerator Control Cable.>
3	**CHECK AIR INTAKE SYSTEM.** 1)Turn the ignition switch to ON. 2)Start the engine, and idle it. 3)Check the following items. •Loose installation of intake manifold, idle air control solenoid valve and throttle body •Cracks of intake manifold gasket, idle air control solenoid valve gasket and throttle body gasket •Disconnections of vacuum hoses	Is there a fault in air intake system?	Repair air suction and leaks.	Replace the idle air control solenoid valve. <Ref. to FU(DOHC TURBO)-36, Idle Air Control Solenoid Valve.>

GETtheMANUALS.org

BJ:DTC P0508 — IDLE CONTROL SYSTEM CIRCUIT LOW INPUT —

- **DTC DETECTING CONDITION:**
  - Immediately at fault recognition
- **TROUBLE SYMPTOM:**
  - Erroneous idling
  - Engine stalls.
  - Engine breathing

CAUTION:
After repair or replacement of faulty parts, conduct Clear Memory Mode <Ref. to EN(DOHC TURBO)-49, OPERATION, Clear Memory Mode.> and Inspection Mode <Ref. to EN(DOHC TURBO)-46, Inspection Mode.>.

- **WIRING DIAGRAM:**

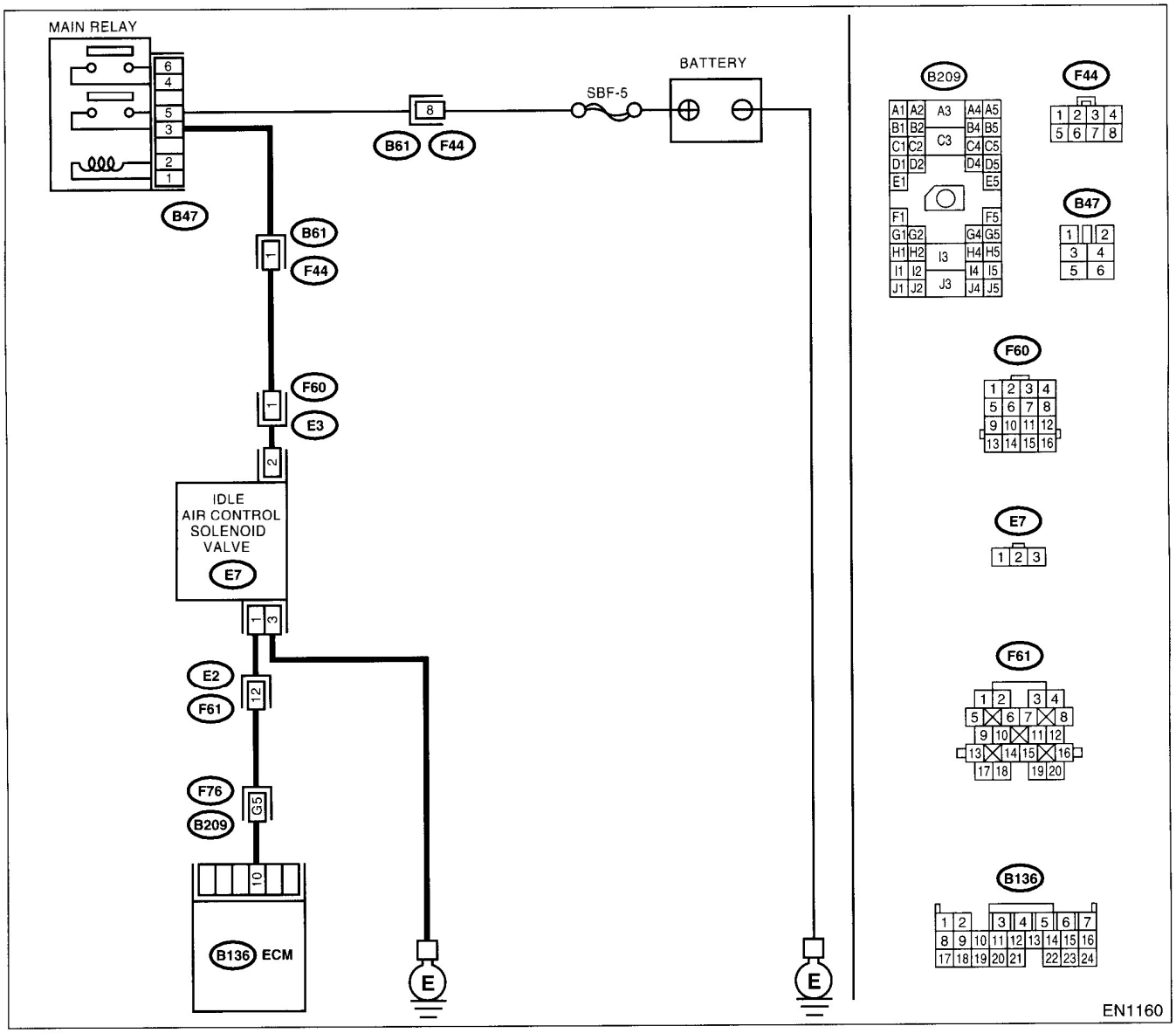

GETtheMANUALS.org

	Step	Check	Yes	No
	CHECK OUTPUT SIGNAL FROM ECM. 1)Turn the ignition switch to ON. 2)Measure the voltage between ECM and chassis ground. ***Connector & terminal*** ***(B136) No. 10 (+) — Chassis ground (–):***	s the voltage more than 3 V?	Repair poor contact in ECM connector.	Go to step **2.**
2	**CHECK POWER SUPPLY TO IDLE AIR CONTROL SOLENOID VALVE.** 1)Turn the ignition switch to OFF. 2)Disconnect the connector from idle air control solenoid valve. 3)Turn the ignition switch to ON. 4)Measure the voltage between idle air control solenoid valve and engine ground. ***Connector & terminal*** ***(E7) No. 2 (+) — Engine ground (–):***	s the voltage more than 10 V?	Go to step **3.**	Repair harness and connector. NOTE: In this case, repair the following: • Open circuit in harness between idle air control solenoid valve and main relay connector • Poor contact in coupling connector
3	**CHECK HARNESS BETWEEN ECM AND IDLE AIR CONTROL SOLENOID VALVE**	Is the resistance less than 1 Ω?	Go to step **4.**	Repair harness and connector. NOTE: In this case, repair the following: • Open circuit in harness between ECM and idle air control solenoid valve connector • Poor contact in coupling connector
4	**CHECK HARNESS BETWEEN ECM AND IDLE AIR CONTROL SOLENOID VALVE CONNECTOR.** Measure the resistance of harness between ECM and chassis ground. ***Connector & terminal*** ***(B136) No. 10 — Chassis ground:***	Is the resistance less than 10 Ω?	Repair ground short circuit in harness between ECM and idle air control solenoid valve connector.	Go to step **5.**
5	**CHECK GROUND CIRCUIT OF IDLE AIR CONTROL SOLENOID VALVE.** Measure the resistance of harness between idle air control solenoid valve connector and engine ground. ***Connector & terminal*** ***(E7) No. 3 — Engine ground:***	Is the resistance less than 5 Ω?	Go to step **6.**	Repair open circuit in harness between idle air control solenoid valve connector and engine ground terminal.
6	**CHECK POOR CONTACT.** Check poor contact in ECM and idle air control solenoid valve connectors.	Is there poor contact in ECM and idle air control solenoid valve connectors?	Repair poor contact in ECM and idle air control solenoid valve connectors.	Replace the idle air control solenoid valve. <Ref. to FU(DOHC TURBO)-36, Idle Air Control Solenoid Valve.>

GETtheMANUALS.org

BK:DTC P0509 — IDLE CONTROL SYSTEM CIRCUIT HIGH INPUT —

- **DTC DETECTING CONDITION:**
  - Immediately at fault recognition
- **TROUBLE SYMPTOM:**
  - Erroneous idling
  - Engine stalls.
  - Engine breathing

CAUTION:
After repair or replacement of faulty parts, conduct Clear Memory Mode <Ref. to EN(DOHC TURBO)-49, OPERATION, Clear Memory Mode.> and Inspection Mode <Ref. to EN(DOHC TURBO)-46, Inspection Mode.>.

- **WIRING DIAGRAM:**

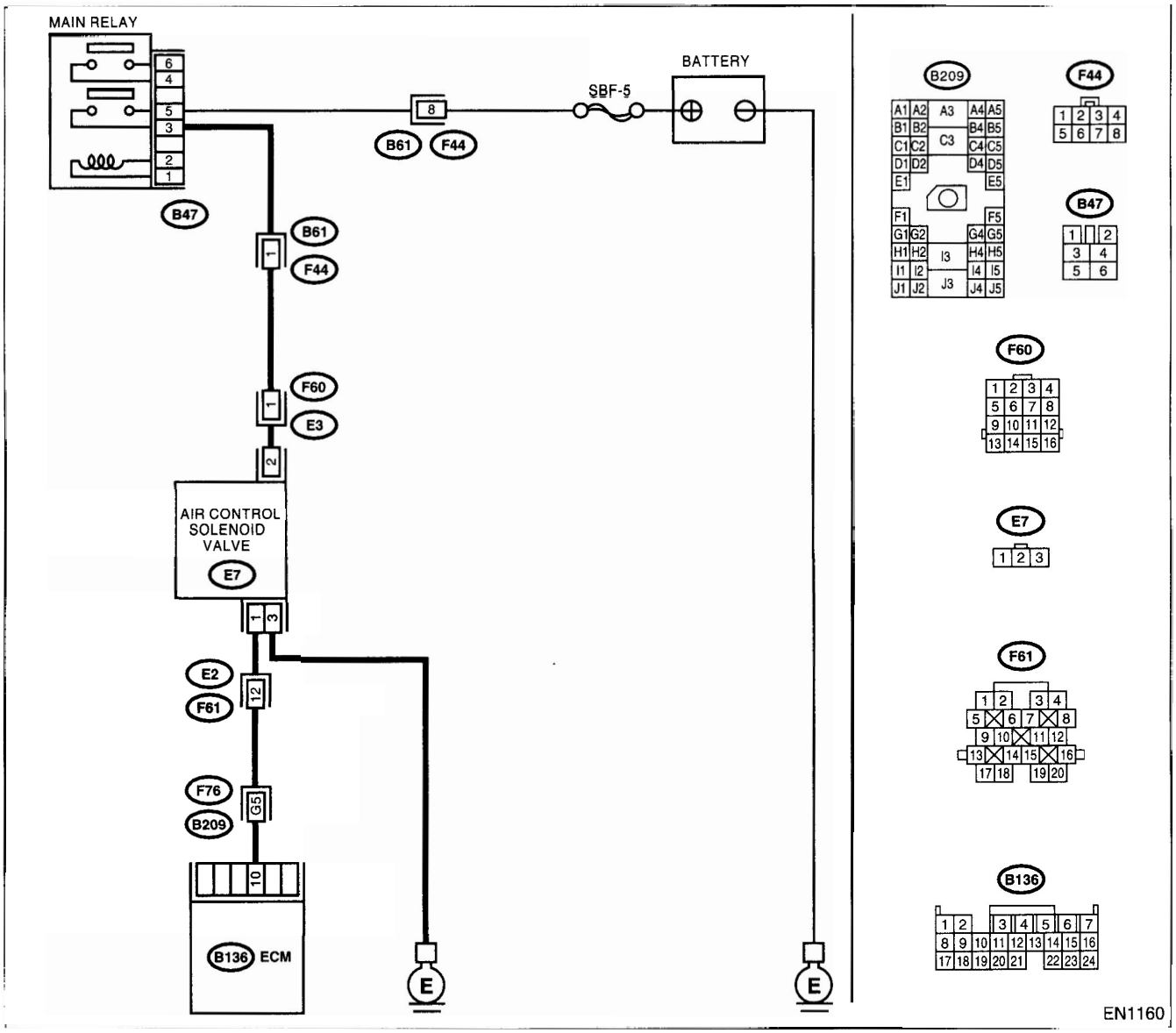

GETtheMANUALS.org

	Step	Check	Yes	No
1	**CHECK THROTTLE CABLE.**	Does the throttle cable have play for adjustment?	Go to step **2.**	Adjust throttle cable. <Ref. to SP-7, INSTALLATION, Accelerator Control Cable.>
2	**CHECK OUTPUT SIGNAL FROM ECM.** 1)Turn the ignition switch to ON. 2)Measure the voltage between ECM and chassis ground. ***Connector & terminal*** ***(B136) No. 10 (+) — Chassis ground (–):***	Is the voltage more than 10 V?	Go to step **3.**	Go to step **4.**
3	**CHECK OUTPUT SIGNAL FROM ECM.** 1)Turn the ignition switch to OFF. 2)Disconnect the connector from idle air control solenoid valve. 3)Turn the ignition switch to ON. 4)Measure the voltage between ECM and chassis ground. ***Connector & terminal*** ***(B136) No. 10 (+) — Chassis ground (–):***	Is the voltage more than 10 V?	Repair battery short circuit in harness between ECM and idle air control solenoid valve connector. After repair, replace the ECM. <Ref. to FU(DOHC TURBO)-47, Engine Control Module.>	Replace the idle air control solenoid valve <Ref. to FU(DOHC TURBO)-36, Idle Air Control Solenoid Valve.> and ECM <Ref. to FU(DOHC TURBO)-47, Engine Control Module.>.
4	**CHECK OUTPUT SIGNAL FROM ECM.** Measure the voltage between ECM and chassis ground. ***Connector & terminal*** ***(B136) No. 10 (+) — Chassis ground (–):***	Does the voltage change more than 10 V by shaking harness and connector of ECM while monitoring the value with voltage meter?	Repair battery short circuit in harness between ECM and idle air control solenoid valve connector. After repair, replace the ECM. <Ref. to FU(DOHC TURBO)-47, Engine Control Module.>	Contact with SOA (distributor) service. NOTE: Insepction by DTM is required, because probable cause is deterioration of multiple parts.

GETtheMANUALS.org

GETtheMANUALS.org

BL:DTC P0512 — STARTER SWITCH CIRCUIT HIGH INPUT —

- **DTC DETECTING CONDITION:**
  - Two consecutive driving cycles with fault
- **TROUBLE SYMPTOM:**
  - Failure of engine to start

CAUTION:
After repair or replacement of faulty parts, conduct Clear Memory Mode <Ref. to EN(DOHC TURBO)-49, OPERATION, Clear Memory Mode.> and Inspection Mode <Ref. to EN(DOHC TURBO)-46, Inspection Mode.>.

GETtheMANUALS.org

- **WIRING DIAGRAM:**

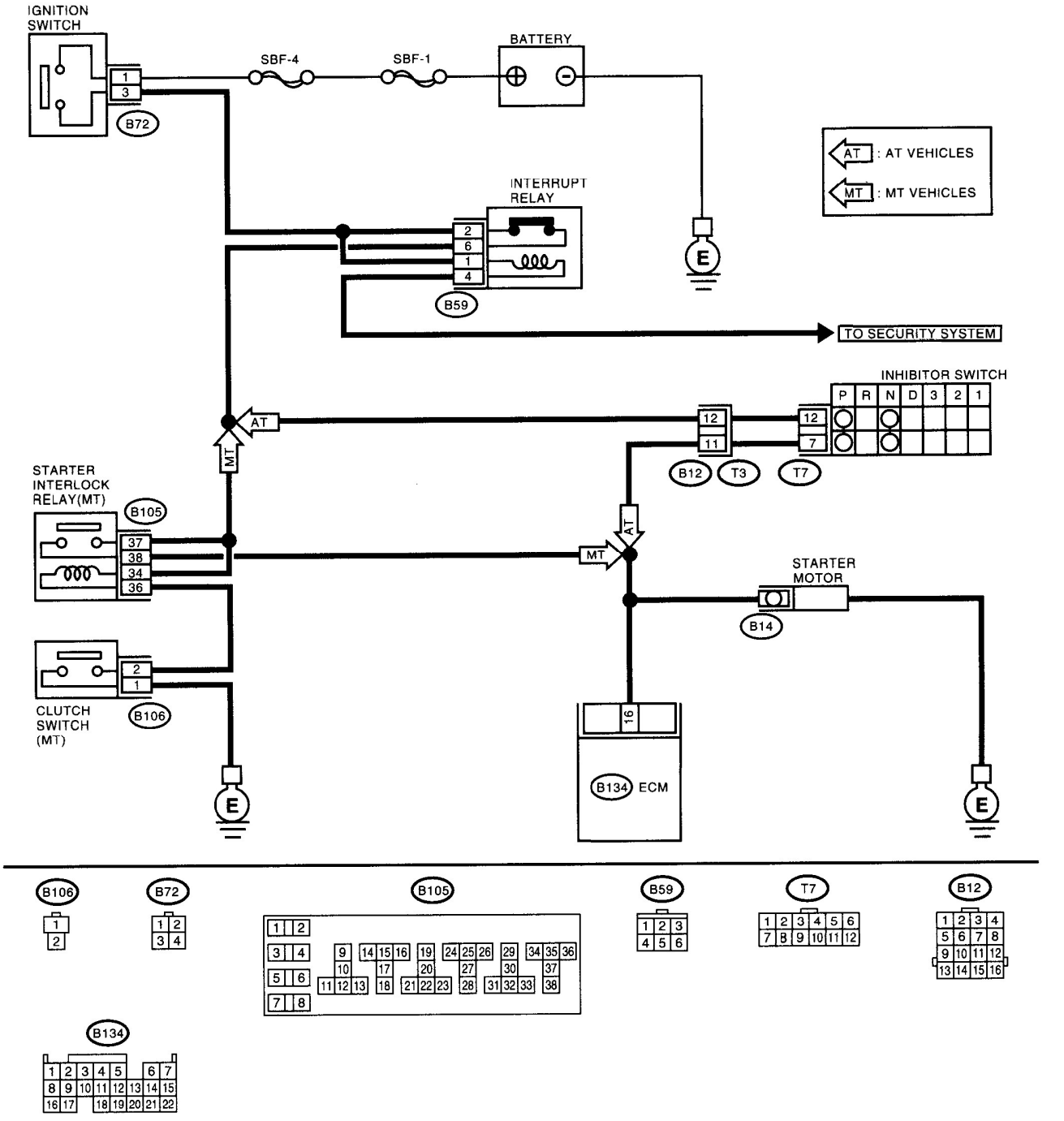

EN1139

GETtheMANUALS.org

	Step	Check	Yes	No
1	**CHECK OPERATION OF STARTER MOTOR.** NOTE: Place the inhibitor switch in each position.	Does the starter motor operate when ignition switch to "ON"?	Repair battery short circuit in starter motor circuit. After repair, replace the ECM. <Ref. to FU(DOHC TURBO)-47, Engine Control Module.>	Check starter motor circuit. <Ref. to EN(DOHC TURBO)-64, STARTER MOTOR CIRCUIT, Diagnostics for Engine Starting Failure.>

GETtheMANUALS.org

BM:DTC P0545 — EXHAUST GAS TEMPERATURE SENSOR CIRCUIT LOW INPUT —

- **DTC DETECTING CONDITION:**
  - Immediately at fault recognition
- **TROUBLE SYMPTOM:**
  - Hard to start
  - Erroneous idling
  - Poor driving performance

CAUTION:
After repair or replacement of faulty parts, conduct Clear Memory Mode <Ref. to EN(DOHC TURBO)-49, OPERATION, Clear Memory Mode.> and Inspection Mode <Ref. to EN(DOHC TURBO)-46, Inspection Mode.>.

- **WIRING DIAGRAM:**

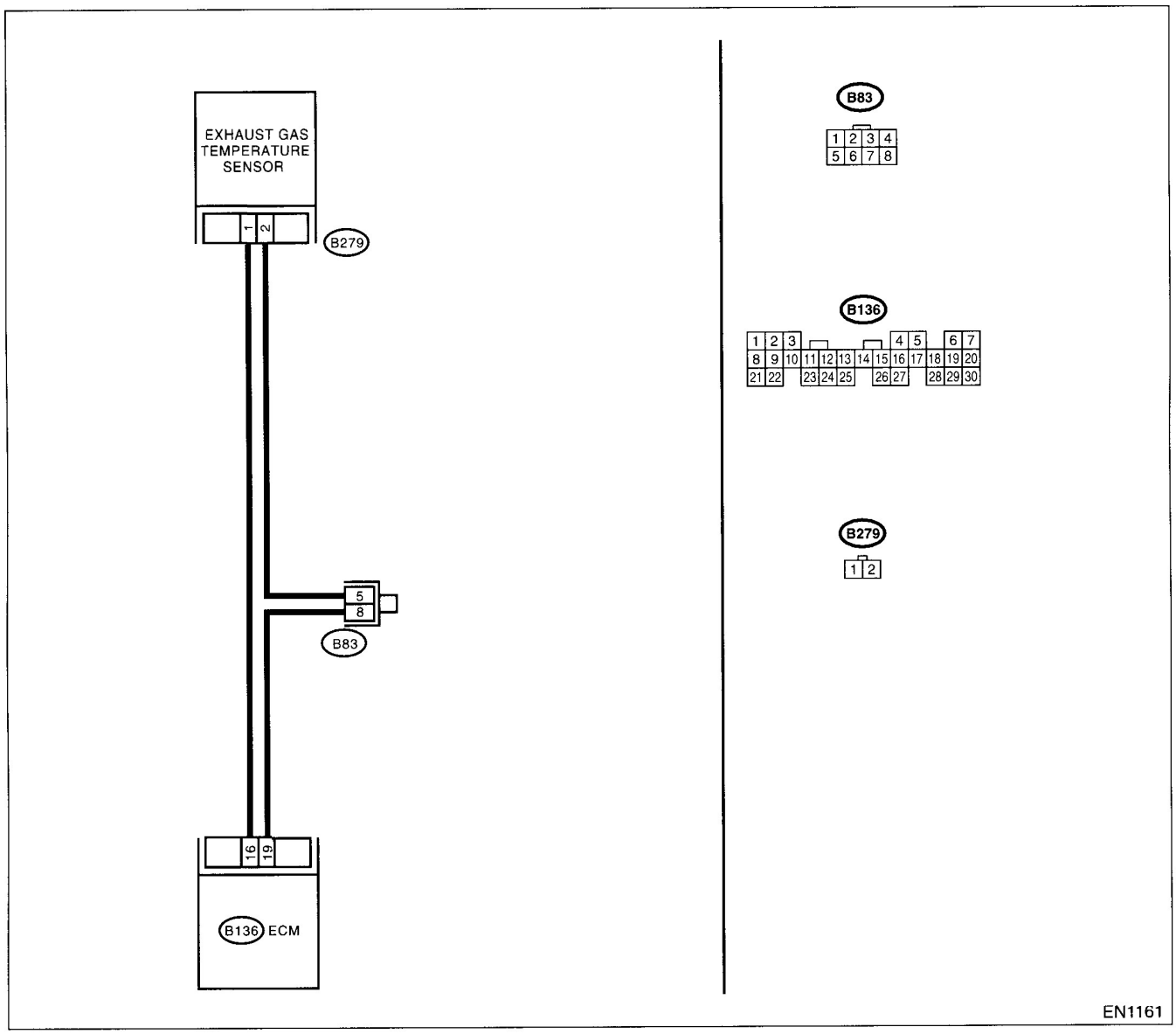

GETtheMANUALS.org

	Step	Check	Yes	No
1	**CHECK CURRENT DATA.** 1)Start the engine. 2)Read the data of exhaust gas temperature sensor signal using Subaru Select Monitor or OBD-II general scan tool. NOTE: •Subaru Select Monitor For detailed operation procedure, refer to the "READ CURRENT DATA FOR ENGINE". <Ref. to EN(DOHC TURBO)-38, Subaru Select Monitor.> •OBD-II general scan tool For detailed operation procedures, refer to the OBD-II General Scan Tool Instruction Manual.	Is the value greater than 1200°C (2192°F)?	Go to step **2.**	Repair poor contact. NOTE: In this case, repair the following: • Poor contact in exhaust gas temperature sensor • Poor contact in ECM • Poor contact in joint connector
2	**CHECK HARNESS BETWEEN EXHAUST GAS TEMPERATURE SENSOR AND ECM CONNECTOR.** 1)Turn the ignition switch to OFF. 2)Disconnect the connector from exhaust gas temperature sensor. 3)Turn the ignition switch to ON. 4)Read the data of exhaust gas temperature sensor signal using Subaru Select Monitor or OBD-II general scan tool. NOTE: •Subaru Select Monitor For detailed operation procedure, refer to the "READ CURRENT DATA FOR ENGINE". <Ref. to EN(DOHC TURBO)-38, Subaru Select Monitor.> •OBD-II general scan tool For detailed operation procedures, refer to the OBD-II General Scan Tool Instruction Manual.	Is the value less than 372°C (702°F)?	Replace the exhaust gas temperature sensor. <Ref. to FU(DOHC TURBO)-46, Exhaust Temperature Sensor.>	Repair ground short circuit in harness between exhaust gas temperature sensor and ECM connector.

GETtheMANUALS.org

BN:DTC P0546 — EXHAUST GAS TEMPERATURE SENSOR CIRCUIT HIGH INPUT —

- **DTC DETECTING CONDITION:**
  - Immediately at fault recognition
- **TROUBLE SYMPTOM:**
  - Hard to start
  - Erroneous idling
  - Poor driving performance

CAUTION:
After repair or replacement of faulty parts, conduct Clear Memory Mode <Ref. to EN(DOHC TURBO)-49, OPERATION, Clear Memory Mode.> and Inspection Mode <Ref. to EN(DOHC TURBO)-46, Inspection Mode.>.

- **WIRING DIAGRAM:**

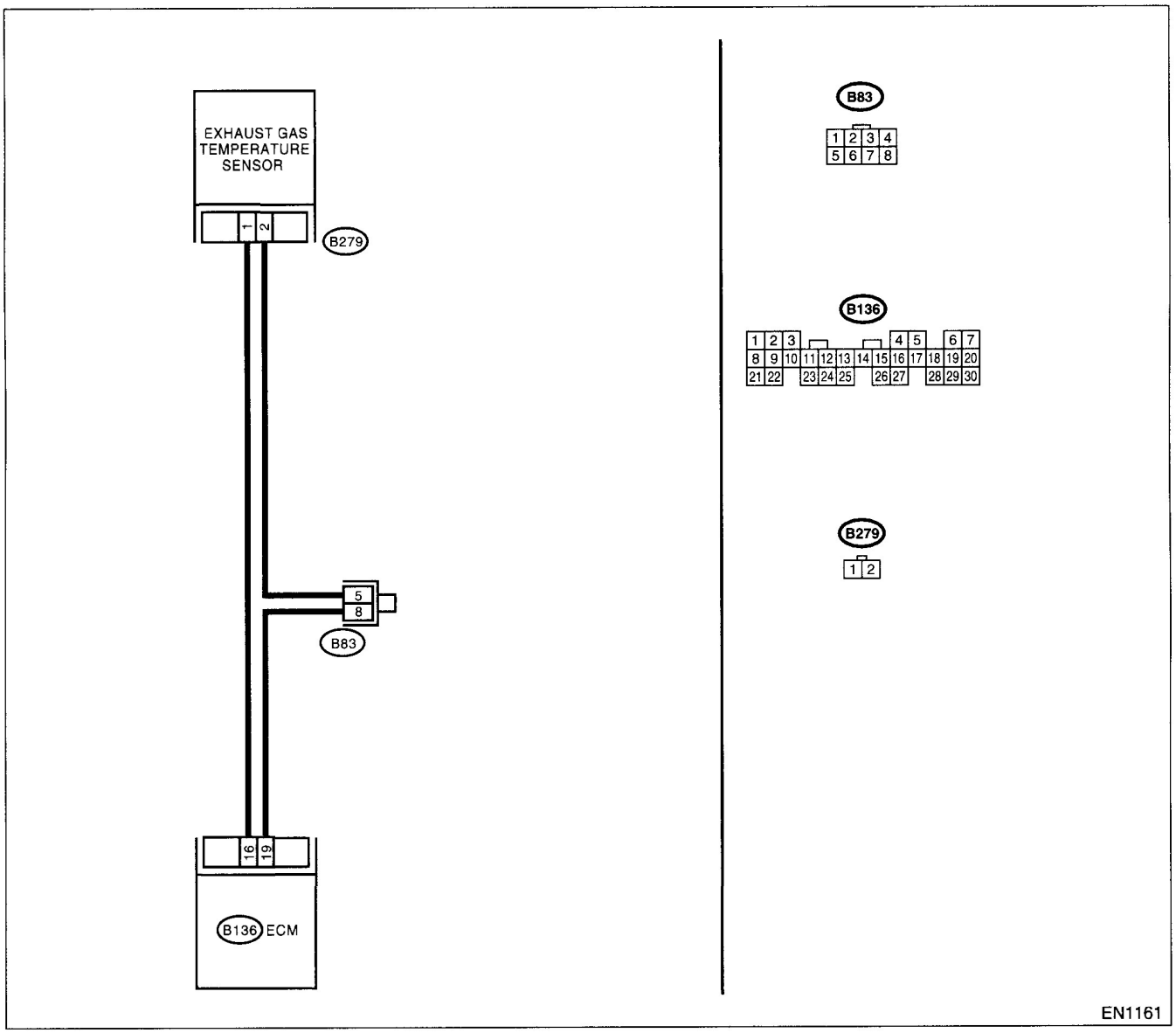

GETtheMANUALS.org

	Step	Check	Yes	No
	CHECK CURRENT DATA. 1)Start the engine. 2)Read the data of exhaust gas temperature sensor signal using Subaru Select Monitor or OBD-II general scan tool. NOTE: •Subaru Select Monitor For detailed operation procedure, refer to the "READ CURRENT DATA FOR ENGINE". <Ref. to EN(DOHC TURBO)-38, Subaru Select Monitor.> •OBD-II general scan tool For detailed operation procedures, refer to the OBD-II General Scan Tool Instruction Manual.	s the value less than 372°C 702°F)?	Go to step **2.**	Repair poor contact. NOTE: n this case, repair he following: Poor contact in exhaust gas temperature sensor Poor contact in ECM Poor contact in oint connector
!	**CHECK HARNESS BETWEEN EXHAUST GAS TEMPERATURE SENSOR AND ECM CONNECTOR.** 1)Turn the ignition switch to OFF. 2)Disconnect the connector from exhaust gas temperature sensor. 3)Measure the voltage between exhaust gas temperature sensor connector and engine ground. ***Connector & terminal*** ***(B279) No. 1 (+) — Engine ground (–):***	s the voltage more than 10 V?	Repair battery short circuit in harness between ECM and exhaust gas temperature sensor connector.	Go to step **3.**
ł	**CHECK HARNESS BETWEEN EXHAUST GAS TEMPERATURE SENSOR AND ECM CONNECTOR.** 1)Turn the ignition switch to ON. 2)Measure the voltage between exhaust gas temperature sensor connector and engine ground. ***Connector & terminal*** ***(B279) No. 1 (+) — Engine ground (–):***	s the voltage more than 10 V?	Repair battery short circuit in harness between ECM and exhaust gas temperature sensor connector.	Go to step **4.**
ł	**CHECK HARNESS BETWEEN EXHAUST GAS TEMPERATURE SENSOR AND ECM CONNECTOR.** Measure the voltage between exhaust gas temperature sensor connector and engine ground. ***Connector & terminal*** ***(B279) No. 1 (+) — Engine ground (–):***	s the voltage more than 4 V?	Go to step **5.**	Repair harness and connector. NOTE: n this case, repair he following: Open circuit in harness between ECM and exhaust gas temperature sensor connector Poor contact in exhaust gas temperature sensor connector Poor contact in ECM connector Poor contact in oint connector

GETtheMANUALS.org

	Step	Check	Yes	No
5	**CHECK HARNESS BETWEEN EXHAUST GAS TEMPERATURE SENSOR AND ECM CONNECTOR.** 1)Turn the ignition switch to OFF. 2)Measure the resistance of harness between exhaust gas temperature sensor connector and engine ground. ***Connector & terminal*** ***(B279) No. 2 — Engine ground:***	Is the resistance less than 5 Ω?	Replace the exhaust gas temperature sensor. <Ref. to FU(DOHC TURBO)-46, Exhaust Temperature Sensor.>	Repair harness and connector. NOTE: In this case, repair the following: • Open circuit in harness between ECM and exhaust gas temperature sensor connector • Poor contact in exhaust gas temperature sensor connector • Poor contact in ECM connector • Poor contact in joint connector

GETtheMANUALS.org

GETtheMANUALS.org

BO:DTC P0604 — INTERNAL CONTROL MODULE MEMORY CHECK SUM ERROR —

- **DTC DETECTING CONDITION:**
  - Immediately at fault recognition
- **TROUBLE SYMPTOM:**
  - Engine does not start.
  - Engine stalls.

CAUTION:
After repair or replacement of faulty parts, conduct Clear Memory Mode <Ref. to EN(DOHC TURBO)-49, OPERATION, Clear Memory Mode.> and Inspection Mode <Ref. to EN(DOHC TURBO)-46, Inspection Mode.>.

GETtheMANUALS.org

- **WIRING DIAGRAM:**

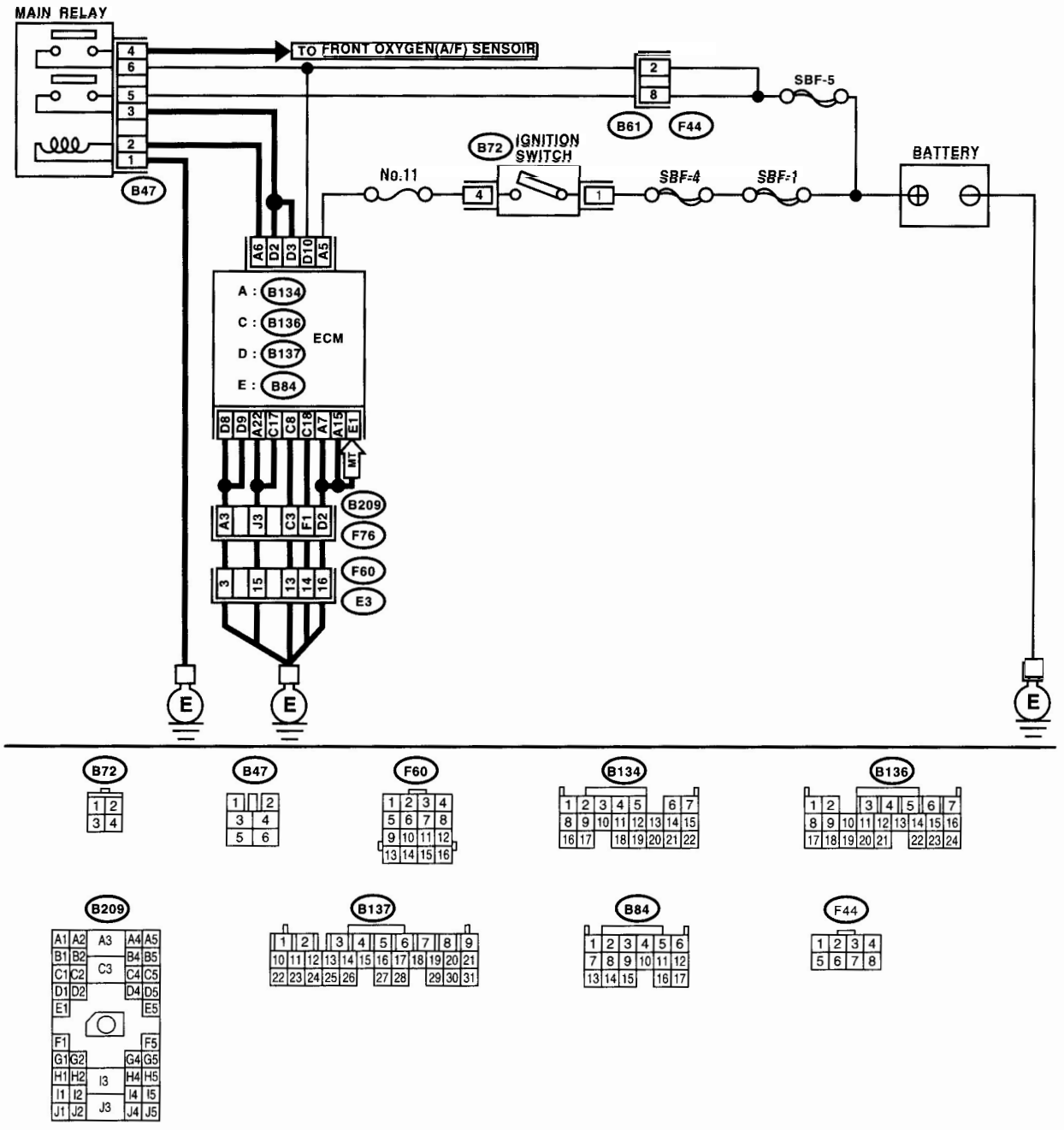

Step	Check	Yes	No
1 CHECK ANY OTHER DTC ON DISPLAY.	Does the Subaru Select Monitor or OBD-II general scan tool indicate DTC P0604?	Replace the ECM. <Ref. to FU(DOHC TURBO)-47, Engine Control Module.>	It is not necessary to inspect DTC P0604.

GETtheMANUALS.org

BP:DTC P0703 — BRAKE SWITCH INPUT MALFUNCTION —

- **DTC DETECTING CONDITION:**
  - Two consecutive driving cycles with fault

CAUTION:
After repair or replacement of faulty parts, conduct Clear Memory Mode <Ref. to EN(DOHC TURBO)-49, OPERATION, Clear Memory Mode.> and Inspection Mode <Ref. to EN(DOHC TURBO)-46, Inspection Mode.>.

- **WIRING DIAGRAM:**

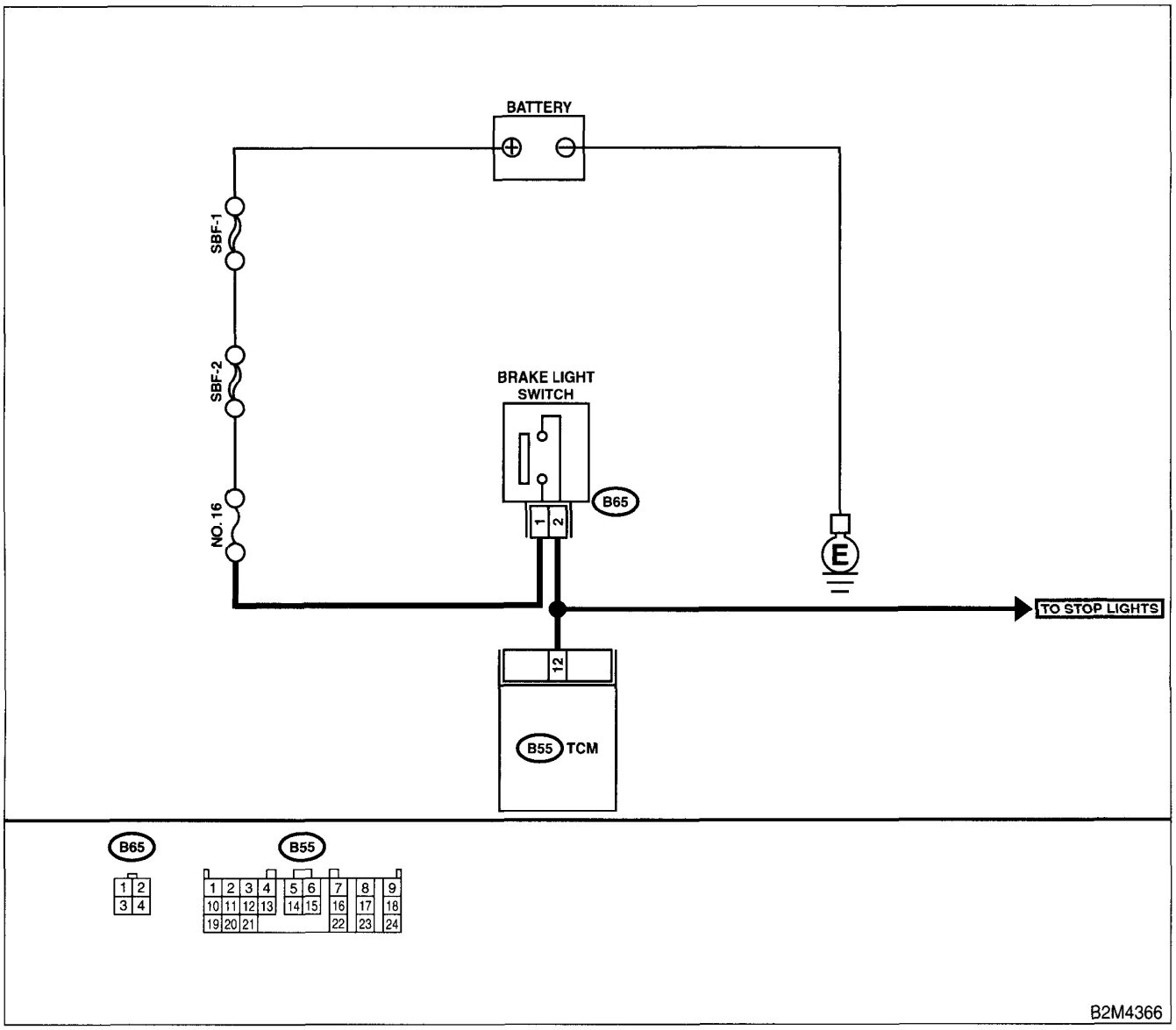

Step		Check	Yes	No
1	CHECK OPERATION OF BRAKE LIGHT.	Does the brake light come on when depressing the brake pedal?	Go to step **2.**	Repair or replace the brake light circuit.

GETtheMANUALS.org

	Step	Check	Yes	No
2	**CHECK HARNESS BETWEEN TCM AND BRAKE LIGHT SWITCH CONNECTOR.** 1)Disconnect the connectors from TCM and brake light switch. 2)Measure the resistance of harness between TCM and brake light switch connector. ***Connector & terminal*** ***(B55) No. 12 — (B65) No. 3:***	Is the resistance less than 1 Ω?	Go to step **3.**	Repair or replace the harness and connector. NOTE: In this case, repair the following: • Open circuit in harness between TCM and brake light switch connector • Poor contact in TCM connector • Poor contact in brake light switch connector
3	**CHECK HARNESS BETWEEN TCM AND BRAKE LIGHT SWITCH CONNECTOR.** Measure the resistance of harness between TCM and chassis ground. ***Connector & terminal*** ***(B55) No. 12 — Chassis ground:***	Is the resistance more than 1 MΩ?	Go to step **4.**	Repair ground short circuit in harness between TCM and brake light switch connector.
4	**CHECK INPUT SIGNAL FOR TCM.** 1)Connect the connectors to TCM and brake light switch. 2)Measure the voltage between TCM and chassis ground. ***Connector & terminal*** ***(B55) No. 12 (+) — Chassis ground (–):***	Is the voltage less than 1 V when releasing the brake pedal?	Go to step **5.**	Adjust or replace the brake light switch. <Ref. to LI-7, STOP LIGHT SWITCH, INSPECTION, Stop Light System.>
5	**CHECK INPUT SIGNAL FOR TCM.** Measure the voltage between TCM and chassis ground. ***Connector & terminal*** ***(B55) No. 12 (+) — Chassis ground (–):***	Is the voltage more than 10 V when depressing the brake pedal?	Go to step **6.**	Adjust or replace the brake light switch. <Ref. to LI-7, STOP LIGHT SWITCH, INSPECTION, Stop Light System.>
6	**CHECK POOR CONTACT.** Check poor contact in TCM connector.	Is there poor contact in TCM connector?	Repair poor contact in TCM connector.	Replace the TCM. <Ref. to AT-45, Transmission Control Module (TCM).>

GETtheMANUALS.org

BQ:DTC P0731 — GEAR 1 INCORRECT RATIO —

NOTE:
For the diagnostic procedure, refer to DTC P0734. <Ref. to EN(DOHC TURBO)-270, DTC P0734 — GEAR 4 INCORRECT RATIO —, Diagnostic Procedure with Diagnostic Trouble Code (DTC).>

BR:DTC P0732 — GEAR 2 INCORRECT RATIO —

NOTE:
For the diagnostic procedure, refer to DTC P0734. <Ref. to EN(DOHC TURBO)-270, DTC P0734 — GEAR 4 INCORRECT RATIO —, Diagnostic Procedure with Diagnostic Trouble Code (DTC).>

BS:DTC P0733 — GEAR 3 INCORRECT RATIO —

NOTE:
For the diagnostic procedure, refer to DTC P0734. <Ref. to EN(DOHC TURBO)-270, DTC P0734 — GEAR 4 INCORRECT RATIO —, Diagnostic Procedure with Diagnostic Trouble Code (DTC).>

BT:DTC P0734 — GEAR 4 INCORRECT RATIO —

- **DTC DETECTING CONDITION:**
  - Two consecutive driving cycles with fault
- **TROUBLE SYMPTOM:**
  - Shift point too high or too low; engine brake not effective in "3" range; excessive shift shock; excessive tight corner "braking"

CAUTION:
After repair or replacement of faulty parts, conduct Clear Memory Mode <Ref. to EN(DOHC TURBO)-49, OPERATION, Clear Memory Mode.> and Inspection Mode <Ref. to EN(DOHC TURBO)-46, Inspection Mode.>.

- **WIRING DIAGRAM:**

	Step	Check	Yes	No
1	**CHECK ANY OTHER DTC ON DISPLAY.**	Is there any other DTC on display?	Inspect relevant DTC using "List of Diagnostic Trouble Code (DTC)". <Ref. to EN(DOHC TURBO)-80, List of Diagnostic Trouble Code (DTC).>	Go to step **2.**
2	**CHECK THROTTLE POSITION SENSOR CIRCUIT.** Check throttle position sensor circuit. <Ref. to AT-52, DTC 31 THROTTLE POSITION SENSOR, Diagnostic Procedure with Diagnostic Trouble Code (DTC).>	Is there any trouble in throttle position sensor circuit?	Repair or replace the throttle position sensor circuit.	Go to step **3.**
3	**CHECK FRONT VEHICLE SPEED SENSOR CIRCUIT.** Check front vehicle speed sensor circuit. <Ref. to AT-57, DTC 33 FRONT VEHICLE SPEED SENSOR, Diagnostic Procedure with Diagnostic Trouble Code (DTC).>	Is there any trouble in vehicle speed sensor 2 circuit?	Repair or replace the vehicle speed sensor 2 circuit.	Go to step **4.**
4	**CHECK TORQUE CONVERTER TURBINE SPEED SENSOR CIRCUIT.** Check torque converter turbine speed sensor circuit. <Ref. to AT-62, DTC 36 TORQUE CONVERTER TURBINE SPEED SENSOR, Diagnostic Procedure with Diagnostic Trouble Code (DTC).>	Is there any trouble in torque converter turbine speed sensor circuit?	Repair or replace the torque converter turbine speed sensor circuit.	Go to step **5.**

GETtheMANUALS.org

	Step	Check	Yes	No
5	**CHECK POOR CONTACT.** Check poor contact in TCM connector.	Is there poor contact in TCM connector?	Repair poor contact in TCM connector.	Go to step **6.**
6	**CHECK MECHANICAL TROUBLE.** Check mechanical trouble in automatic transmission.	Is there any mechanical trouble in automatic transmission?	Repair or replace the automatic transmission. <Ref. to AT-12, INSPECTION, Road Test.>	Replace the TCM. <Ref. to AT-45, Transmission Control Module (TCM).>

GETtheMANUALS.org

BU:DTC P0741 — TORQUE CONVERTER CLUTCH SYSTEM MALFUNCTION —

- **DTC DETECTING CONDITION:**
  - Two consecutive driving cycles with fault
- **TROUBLE SYMPTOM:**
  - No lock-up (after engine warm-up)
  - No shift or excessive tight corner "braking"

CAUTION:
After repair or replacement of faulty parts, conduct Clear Memory Mode <Ref. to EN(DOHC TURBO)-49, OPERATION, Clear Memory Mode.> and Inspection Mode <Ref. to EN(DOHC TURBO)-46, Inspection Mode.>.

	Step	Check	Yes	No
1	**CHECK ANY OTHER DTC ON DISPLAY.**	Is there any other DTC on display?	Inspect the relevant DTC using "List of Diagnostic Trouble Code (DTC)". <Ref. to EN(DOHC TURBO)-80, List of Diagnostic Trouble Code (DTC).>	Go to step **2.**
2	**CHECK LOCK-UP DUTY SOLENOID CIRCUIT.** Check lock-up duty solenoid circuit. <Ref. to AT-94, DTC 77 LOCK-UP DUTY SOLENOID, Diagnostic Procedure with Diagnostic Trouble Code (DTC).>	Is there any trouble in lock-up duty solenoid circuit?	Repair or replace the lock-up duty solenoid circuit.	Go to step **3.**
3	**CHECK THROTTLE POSITION SENSOR CIRCUIT.** Check throttle position sensor circuit. <Ref. to AT-52, DTC 31 THROTTLE POSITION SENSOR, Diagnostic Procedure with Diagnostic Trouble Code (DTC).>	Is there any trouble in throttle position sensor circuit?	Repair or replace the throttle position sensor circuit.	Go to step **4.**
4	**CHECK TORQUE CONVERTER TURBINE SPEED SENSOR CIRCUIT.** Check torque converter turbine speed sensor circuit. <Ref. to AT-62, DTC 36 TORQUE CONVERTER TURBINE SPEED SENSOR, Diagnostic Procedure with Diagnostic Trouble Code (DTC).>	Is there any trouble in torque converter turbine speed sensor circuit?	Repair or replace the torque converter turbine speed sensor circuit.	Go to step **5.**
5	**CHECK ENGINE SPEED INPUT CIRCUIT.** Check engine speed input circuit. <Ref. to AT-44, DTC 11 ENGINE SPEED SIGNAL, Diagnostic Procedure with Diagnostic Trouble Code (DTC).>	Is there any trouble in engine speed input circuit?	Repair or replace the engine speed input circuit.	Go to step **6.**
6	**CHECK INHIBITOR SWITCH CIRCUIT.** Check inhibitor switch circuit. <Ref. to AT-115, CHECK INHIBITOR SWITCH., Diagnostic Procedure for No-Diagnostic Trouble Code (DTC).>	Is there any trouble in inhibitor switch circuit?	Repair or replace the inhibitor switch circuit.	Go to step **7.**
7	**CHECK BRAKE LIGHT SWITCH CIRCUIT.** Check brake light switch circuit. <Ref. to AT-112, CHECK BRAKE SWITCH., Diagnostic Procedure for No-Diagnostic Trouble Code (DTC).>	Is there any trouble in brake light switch circuit?	Repair or replace the brake light switch circuit.	Go to step **8.**

GETtheMANUALS.org

	Step	Check	Yes	No
8	**CHECK ATF TEMPERATURE SENSOR CIRCUIT.** Check ATF temperature sensor circuit. <Ref. to AT-48, DTC 27 ATF TEMPERATURE SENSOR, Diagnostic Procedure with Diagnostic Trouble Code (DTC).>	Is there any trouble in ATF temperature sensor circuit?	Repair or replace the ATF temperature sensor circuit.	Go to step **9.**
9	**CHECK POOR CONTACT.** Check poor contact in TCM connector.	Is there poor contact in TCM connector?	Repair poor contact in TCM connector.	Go to step **10.**
10	**CHECK MECHANICAL TROUBLE.** Check mechanical trouble in automatic transmission.	Is there any mechanical trouble in automatic transmission?	Repair or replace the automatic transmission. <Ref. to AT-12, INSPECTION, Road Test.>	Replace the TCM. <Ref. to AT-45, Transmission Control Module (TCM).>

GETtheMANUALS.org

BV: DTC P1086 — TUMBLE GENERATOR VALVE #2 (LH) POSITION SENSOR CIRCUIT LOW INPUT —

- **DTC DETECTING CONDITION:**
  - Immediately at fault recognition
- **TROUBLE SYMPTOM:**
  - Erroneous idling
  - Engine stalls.
  - Poor driving performance

CAUTION:
After repair or replacement of faulty parts, conduct Clear Memory Mode <Ref. to EN(DOHC TURBO)-49, OPERATION, Clear Memory Mode.> and Inspection Mode <Ref. to EN(DOHC TURBO)-46, Inspection Mode.>.

- **WIRING DIAGRAM:**

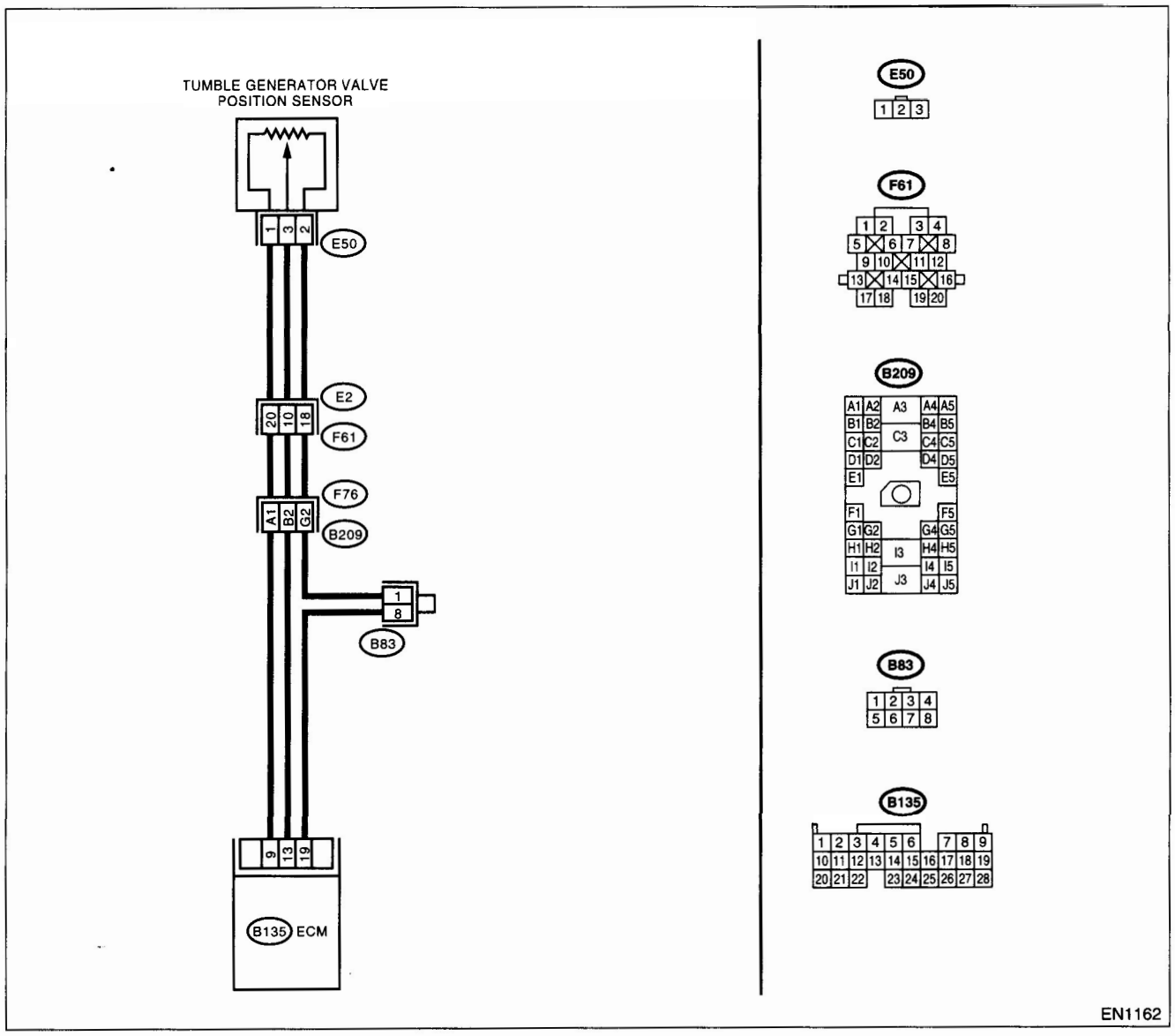

GETtheMANUALS.org

	Step	Check	Yes	No
	CHECK CURRENT DATA. 1)Start the engine. 2)Read the data of tumble generator valve position sensor signal using Subaru Select Monitor or OBD-II general scan tool. NOTE: •Subaru Select Monitor For detailed operation procedure, refer to the "READ CURRENT DATA FOR ENGINE". <Ref. to EN(DOHC TURBO)-38, Subaru Select Monitor.> •OBD-II general scan tool For detailed operation procedures, refer to the OBD-II General Scan Tool Instruction Manual.	s the value less than 0.1 V?	Go to step **2.**	Even if MIL lights up, the circuit has returned to a normal condition at this time. A temporary poor contact of the connector may be the cause. NOTE: In this case, repai the following: • Poor contact in throttle position sensor connector • Poor contact in ECM connector • Poor contact in coupling connecto
2	**CHECK INPUT SIGNAL FOR ECM.** Measure the voltage between ECM connector and chassis ground while tumble generator valve is fully closed. ***Connector & terminal*** ***(B135) No. 9 (+) — Chassis ground (–):***	s the voltage more than 4.5 V?	Go to step **4.**	Go to step **3.**
3	**CHECK INPUT SIGNAL FOR ECM.** Measure the voltage between ECM connector and chassis ground. ***Connector & terminal*** ***(B135) No. 9 (+) — Chassis ground (–):***	Does the voltage change more han 4.5 V by shaking harness and connector of ECM while nonitoring the value with voltage meter?	Repair poor contact in ECM connector.	Contact with SOA (distributor) service. NOTE: Inspection by DTM is required, because probable cause is deteriora tion of multiple parts.
4	**CHECK INPUT SIGNAL FOR ECM.** Measure the voltage between ECM connector and chassis ground. ***Connector & terminal*** ***(B135) No. 13 (+) — Chassis ground (–):***	s the voltage less than 0.1 V?	Go to step **6.**	Go to step **5.**
5	**CHECK INPUT SIGNAL FOR ECM. (USING SUBARU SELECT MONITOR.)** Measure the voltage between ECM connector and chassis ground.	Does the voltage change more han 0.1 V by shaking harness and connector of ECM while nonitoring the value with Subaru Select Monitor?	Repair poor contact in ECM connector.	Go to step **6.**

GETtheMANUALS.org

	Step	Check	Yes	No
6	**CHECK HARNESS BETWEEN ECM AND TUMBLE GENERATOR VALVE POSITION SENSOR CONNECTOR.** 1)Turn the ignition switch to OFF. 2)Disconnect the connectors from tumble generator valve position sensor. 3)Turn the ignition switch to ON. 4)Measure voltage between tumble generator valve position sensor connector and engine ground. ***Connector & terminal*** ***(E50) No. 1 (+) — Engine ground (–):***	s the voltage more than 4.5 V?	Go to step **7.**	Repair harness and connector. NOTE: In this case, repai the following: • Open circuit in harness between tumble generator valve position sen sor and ECM con-nector • Poor contact in tumble generator valve position sen sor connector • Poor contact in ECM connector • Poor contact in coupling connecto • Poor contact in joint connector
7	**CHECK HARNESS BETWEEN ECM AND TUMBLE GENERATOR VALVE POSITION SENSOR CONNECTOR.** 1)Turn the ignition switch to OFF. 2)Measure the resistance of harness between ECM connector and tumble generator valve position sensor connector. ***Connector & terminal*** ***(B135) No. 13 — (E50) No. 3:***	s the resistance less than 1 Ω?	Go to step **8.**	Repair harness and connector. NOTE: In this case, repa the following: • Open circuit in harness between tumble generator valve position sen sor and ECM con-nector • Poor contact in ECM connector • Poor contact in tumble generator valve position sen sor connector • Poor contact in coupling connecto
8	**CHECK HARNESS BETWEEN ECM AND TUMBLE GENERATOR VALVE POSITION SENSOR CONNECTOR.** Measure the resistance of harness between tumble generator valve position sensor connector and engine ground. ***Connector & terminal*** ***(E50) No. 3 — Engine ground:***	s the resistance less than 10 Ω?	Repair ground short circuit in har-ness between tum-ble generator valve position sensor and ECM connec-tor.	Go to step **9.**
9	**CHECK POOR CONTACT.** Check poor contact in tumble generator valve position sensor connector.	s there poor contact in tumble generator valve position sensor connector?	Repair poor con-act in tumble gen-erator valve position sensor connector.	Replace the tum-ble generator valve assembly. <Ref. to FU(DOHC TURBO)-40, Tum-ble Generator Valve Assembly.>

GETtheMANUALS.org

GETtheMANUALS.org

BW:DTC P1087 — TUMBLE GENERATOR VALVE #2 (LH) POSITION SENSOR CIRCUIT HIGH INPUT —

- **DTC DETECTING CONDITION:**
  - Immediately at fault recognition
- **TROUBLE SYMPTOM:**
  - Erroneous idling
  - Engine stalls.
  - Poor driving performance

CAUTION:
After repair or replacement of faulty parts, conduct Clear Memory Mode <Ref. to EN(DOHC TURBO)-49, OPERATION, Clear Memory Mode.> and Inspection Mode <Ref. to EN(DOHC TURBO)-46, Inspection Mode.>.

- **WIRING DIAGRAM:**

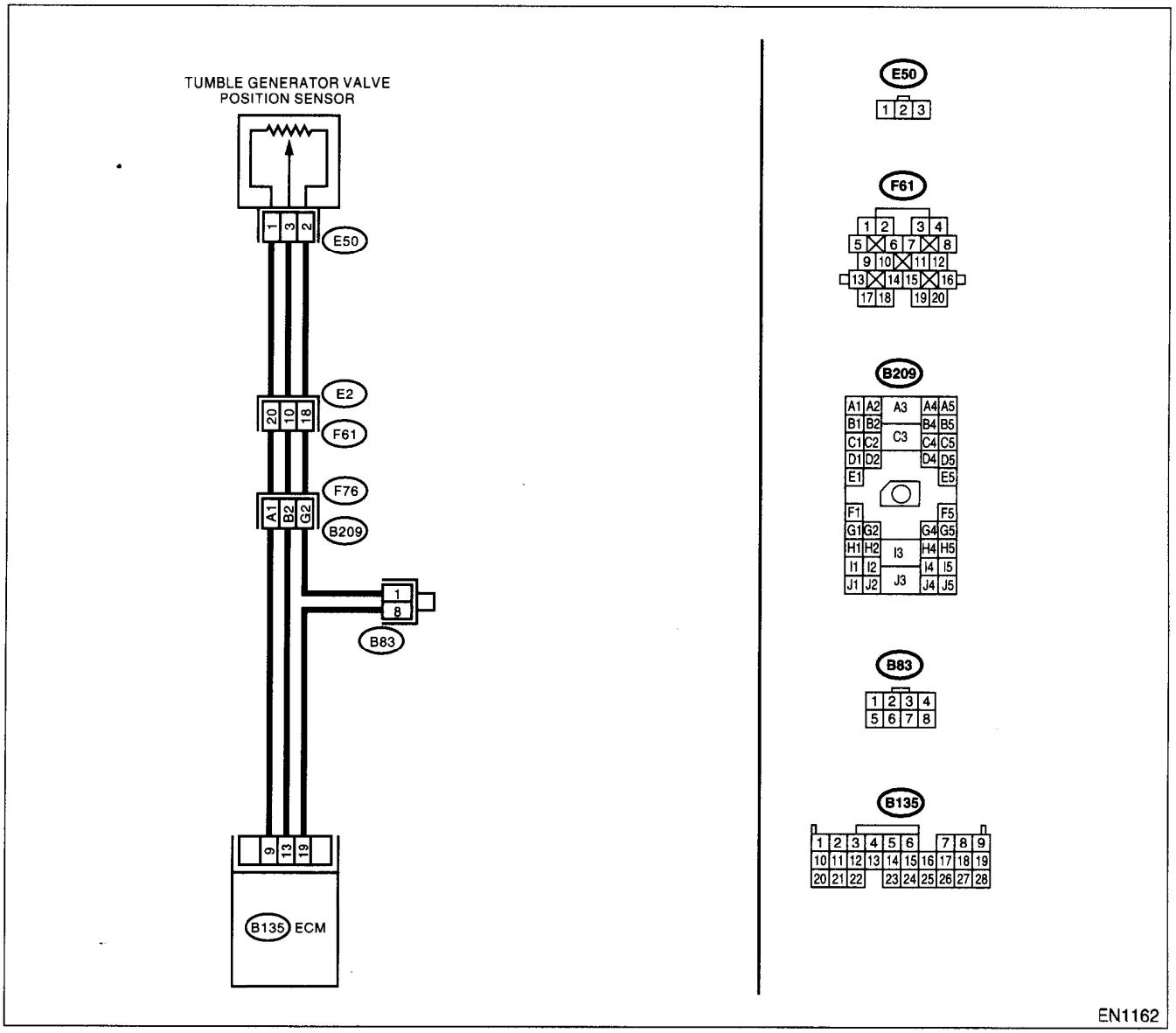

GETtheMANUALS.org

	Step	Check	Yes	No
1	**CHECK CURRENT DATA.** 1)Start the engine. 2)Read the data of tumble generator valve position sensor signal using Subaru Select Monitor or OBD-II general scan tool. NOTE: •Subaru Select Monitor For detailed operation procedure, refer to the "READ CURRENT DATA FOR ENGINE". <Ref. to EN(DOHC TURBO)-38, Subaru Select Monitor.> •OBD-II general scan tool For detailed operation procedures, refer to the OBD-II General Scan Tool Instruction Manual.	Is the value more than 4.9 V?	Go to step **2.**	Even if MIL lights up, the circuit has returned to a normal condition at this time. A temporary poor contact of the connector may be the cause. NOTE: In this case, repair the following: • Poor contact in tumble generator valve position sensor connector • Poor contact in ECM connector • Poor contact in coupling connector
2	**CHECK HARNESS BETWEEN TUMBLE GENERATOR VALVE POSITION SENSOR AND ECM CONNECTOR.** 1)Turn the ignition switch to OFF. 2)Disconnect the connector from tumble generator valve position sensor. 3)Measure the resistance of harness between throttle position sensor connector and engine ground. ***Connector & terminal*** ***(E50) No. 2 — Engine ground:***	Is the resistance less than 5 Ω?	Go to step **3.**	Repair harness and connector. NOTE: In this case, repair the following: • Open circuit in harness between tumble generator valve position sensor and ECM connector • Poor contact in coupling connector • Poor contact in joint connector
3	**CHECK HARNESS BETWEEN TUMBLE GENERATOR VALVE POSITION SENSOR AND ECM CONNECTOR.** 1)Turn the ignition switch to ON. 2)Measure the voltage between throttle position sensor connector and engine ground. ***Connector & terminal*** ***(E50) No. 3 (+) — Engine ground (–):***	Is the voltage more than 4.9 V?	Repair battery short circuit in harness between tumble generator valve position sensor and ECM connector. After repair, replace the ECM. <Ref. to FU(DOHC TURBO)-47, Engine Control Module.>	Replace the tumble generator valve assembly. <Ref. to FU(DOHC TURBO)-40, Tumble Generator Valve Assembly.>

GETtheMANUALS.org

BX: DTC P1088 — TUMBLE GENERATOR VALVE #1 (RH) POSITION SENSOR CIRCUIT LOW INPUT —

- **DTC DETECTING CONDITION:**
  - Immediately at fault recognition
- **TROUBLE SYMPTOM:**
  - Erroneous idling
  - Engine stalls.
  - Poor driving performance

CAUTION:
After repair or replacement of faulty parts, conduct Clear Memory Mode <Ref. to EN(DOHC TURBO)-49, OPERATION, Clear Memory Mode.> and Inspection Mode <Ref. to EN(DOHC TURBO)-46, Inspection Mode.>.

- **WIRING DIAGRAM:**

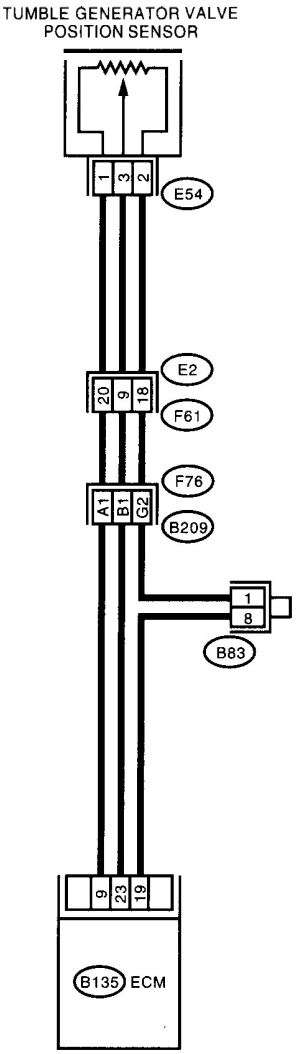

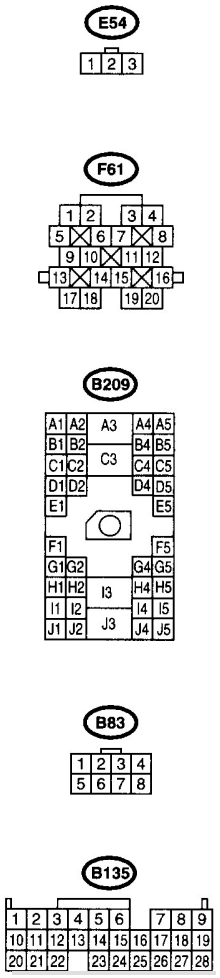

EN1163

GET theMANUALS.org

	Step	Check	Yes	No
1	**CHECK CURRENT DATA.** 1)Start the engine. 2)Read the data of tumble generator valve position sensor signal using Subaru Select Monitor or OBD-II general scan tool. NOTE: •Subaru Select Monitor For detailed operation procedure, refer to the "READ CURRENT DATA FOR ENGINE". <Ref. to EN(DOHC TURBO)-38, Subaru Select Monitor.> •OBD-II general scan tool For detailed operation procedures, refer to the OBD-II General Scan Tool Instruction Manual.	Is the value less than 0.1 V?	Go to step **2.**	Even if MIL lights up, the circuit has returned to a normal condition at this time. A temporary poor contact of the connector may be the cause. NOTE: In this case, repair the following: • Poor contact in tumble generator valve position sensor connector • Poor contact in ECM connector • Poor contact in coupling connector
2	**CHECK INPUT SIGNAL FOR ECM.** Measure the voltage between ECM connector and chassis ground while throttle valve is fully closed. ***Connector & terminal*** ***(B135) No. 9 (+) — Chassis ground (–):***	Is the voltage more than 4.5 V?	Go to step **4.**	Go to step **3.**
3	**CHECK INPUT SIGNAL FOR ECM.** Measure the voltage between ECM connector and chassis ground. ***Connector & terminal*** ***(B135) No. 9 (+) — Chassis ground (–):***	Does the voltage change more than 4.5 V by shaking harness and connector of ECM while monitoring the value with voltage meter?	Repair poor contact in ECM connector.	Contact with SOA (distributor) service. NOTE: Inspection by DTM is required, because probable cause is deterioration of multiple parts.
4	**CHECK INPUT SIGNAL FOR ECM.** Measure the voltage between ECM connector and chassis ground. ***Connector & terminal*** ***(B135) No. 23 (+) — Chassis ground (–):***	Is the voltage less than 0.1 V?	Go to step **6.**	Go to step **5.**
5	**CHECK INPUT SIGNAL FOR ECM. (USING SUBARU SELECT MONITOR.)** Measure the voltage between ECM connector and chassis ground.	Does the voltage change more than 0.1 V by shaking harness and connector of ECM while monitoring the value with Subaru Select Monitor?	Repair poor contact in ECM connector.	Go to step **6.**

GETtheMANUALS.org

	Step	Check	Yes	No
6	**CHECK HARNESS BETWEEN ECM AND TUMBLE GENERATOR VALVE POSITION SENSOR CONNECTOR.** 1)Turn the ignition switch to OFF. 2)Disconnect the connectors from tumble generator valve position sensor. 3)Turn the ignition switch to ON. 4)Measure the voltage between throttle position sensor connector and engine ground. ***Connector & terminal*** ***(E54) No. 1 (+) — Engine ground (–):***	Is the voltage more than 4.5 V?	Go to step **7.**	Repair harness and connector. NOTE: In this case, repair the following: • Open circuit in harness between tumble generator valve position sensor and ECM connector • Poor contact in tumble generator valve position sensor connector • Poor contact in ECM connector • Poor contact in coupling connector • Poor contact in joint connector
7	**CHECK HARNESS BETWEEN ECM AND TUMBLE GENERATOR VALVE POSITION SENSOR CONNECTOR.** 1)Turn the ignition switch to OFF. 2)Measure the resistance of harness between ECM connector and tumble generator valve position sensor connector. ***Connector & terminal*** ***(B135) No. 23 — (E54) No. 3:***	Is the resistance less than 1 Ω?	Go to step **8.**	Repair harness and connector. NOTE: In this case, repair the following: • Open circuit in harness between tumble generator valve position sensor and ECM connector • Poor contact in ECM connector • Poor contact in tumble generator valve position sensor connector • Poor contact in coupling connector
8	**CHECK HARNESS BETWEEN ECM AND THROTTLE POSITION SENSOR CONNECTOR.** Measure the resistance of harness between tumble generator valve position sensor connector and engine ground. ***Connector & terminal*** ***(E54) No. 3 — Engine ground:***	Is the resistance less than 10 Ω?	Repair ground short circuit in harness between tumble generator valve position sensor and ECM connector.	Go to step **9.**
9	**CHECK POOR CONTACT.** Check poor contact in tumble generator valve position sensor connector.	Is there poor contact in tumble generator valve position sensor connector?	Repair poor contact in tumble generator valve position sensor connector.	Replace the tumble generator valve assembly. <Ref. to FU(DOHC TURBO)-40, Tumble Generator Valve Assembly.>

GETtheMANUALS.org

GETtheMANUALS.org

BY:DTC P1089 — TUMBLE GENERATOR VALVE #1 (RH) POSITION SENSOR CIRCUIT HIGH INPUT —

- **DTC DETECTING CONDITION:**
  - Immediately at fault recognition
- **TROUBLE SYMPTOM:**
  - Erroneous idling
  - Engine stalls.
  - Poor driving performance

CAUTION:
After repair or replacement of faulty parts, conduct Clear Memory Mode <Ref. to EN(DOHC TURBO)-49, OPERATION, Clear Memory Mode.> and Inspection Mode <Ref. to EN(DOHC TURBO)-46, Inspection Mode.>.

- **WIRING DIAGRAM:**

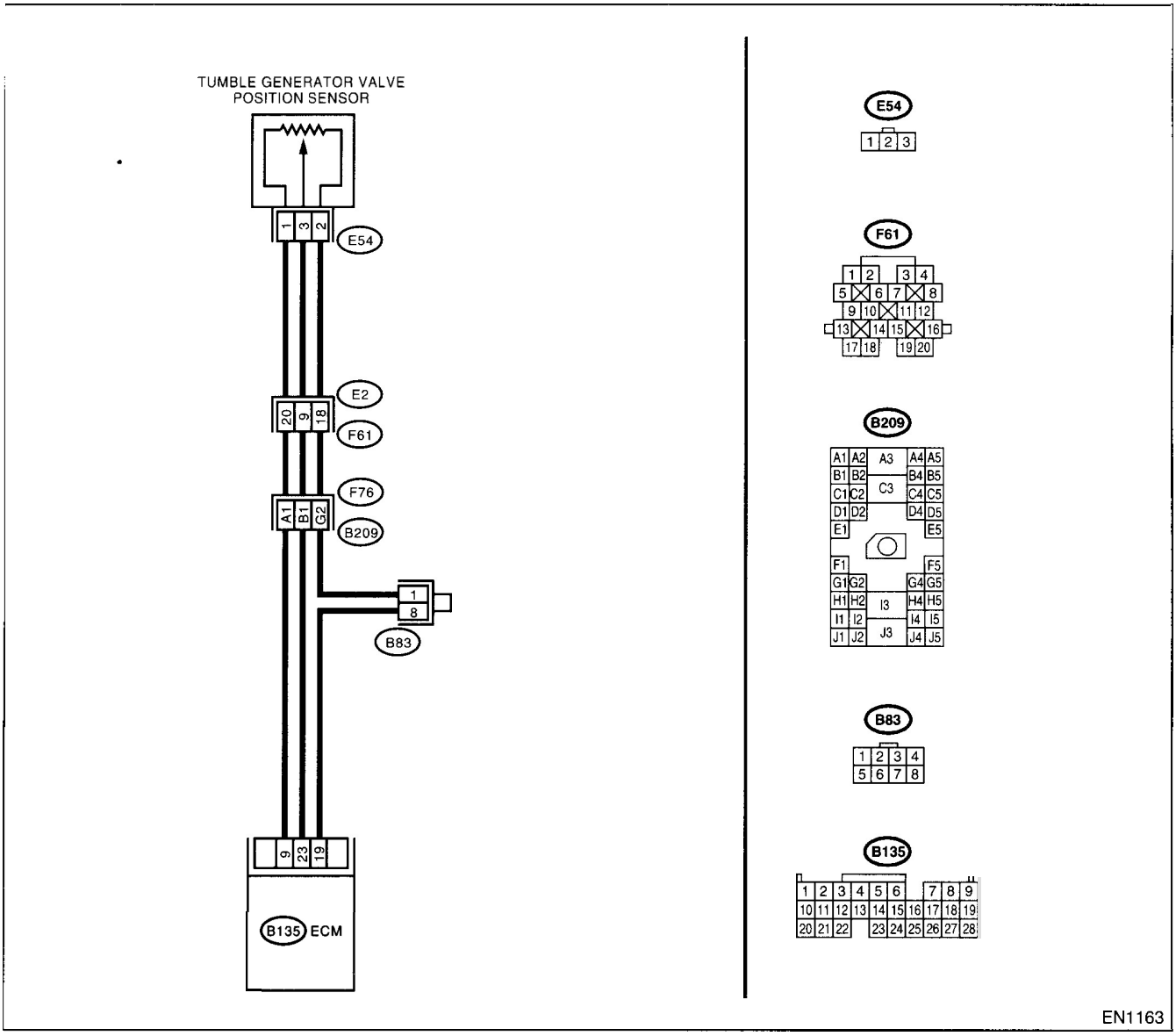

GETtheMANUALS.org

	Step	Check	Yes	No
1	**CHECK CURRENT DATA.** 1)Start the engine. 2)Read the data of tumble generator valve position sensor signal using Subaru Select Monitor or OBD-II general scan tool. NOTE: •Subaru Select Monitor For detailed operation procedure, refer to the "READ CURRENT DATA FOR ENGINE". <Ref. to EN(DOHC TURBO)-38, Subaru Select Monitor.> •OBD-II general scan tool For detailed operation procedures, refer to the OBD-II General Scan Tool Instruction Manual.	s the value more than 4.9 V?	Go to step **2.**	Even if MIL lights up, the circuit has returned to a normal condition at this time. A temporary poor contact of the connector may be the cause. NOTE: In this case, repai the following: • Poor contact in tumble generator valve position sensor connector • Poor contact in ECM connector • Poor contact in coupling connectc
2	**CHECK HARNESS BETWEEN TUMBLE GENERATOR VALVE POSITION SENSOR AND ECM CONNECTOR.** 1)Turn the ignition switch to OFF. 2)Disconnect the connector from tumble generator valve position sensor. 3)Measure the resistance of harness between tumble generator valve position sensor connector and engine ground. ***Connector & terminal*** ***(E54) No. 2 — Engine ground:***	s the resistance less than 5 Ω?	Go to step **3.**	Repair harness and connector. NOTE: In this case, repai the following: • Open circuit in harness between tumble generator valve position sensor and ECM connector • Poor contact in coupling connecto • Poor contact in joint connector
3	**CHECK HARNESS BETWEEN TUMBLE GENERATOR VALVE POSITION SENSOR AND ECM CONNECTOR.** 1)Turn the ignition switch to ON. 2)Measure the voltage between tumble generator valve position sensor connector and engine ground. ***Connector & terminal*** ***(E54) No. 3 (+) — Engine ground (–):***	s the voltage more than 4.9 V?	Repair battery short circuit in harness between tumble generator valve position sensor and ECM connector. After repair, eplace the ECM. <Ref. to FU(DOHC TURBO)-47, Engine Control Module.>	Replace the tumble generator valve assembly. <Ref. tc FU(DOHC TURBO)-40, Tumble Generator Valve Assembly.>

GETtheMANUALS.org

BZ:DTC P1090 — TUMBLE GENERATOR VALVE SYSTEM #1 (RH) MALFUNCTION (STUCK OPEN) —

- **DTC DETECTING CONDITION:**
  - Immediately at fault recognition

CAUTION:
After repair or replacement of faulty parts, conduct Clear Memory Mode <Ref. to EN(DOHC TURBO)-49, OPERATION, Clear Memory Mode.> and Inspection Mode <Ref. to EN(DOHC TURBO)-46, Inspection Mode.>.

	Step	Check	Yes	No
1	**CHECK ANY OTHER DTC ON DISPLAY.**	Does the Subaru Select Monitor or OBD-II general scan tool indicate P1088, P1089, P1094 or P1095?	Inspect DTC P1088, P1089, P1094 or P1095 using List of Diagnostic Trouble Code (DTC) <Ref. to EN(DOHC TURBO)-80, List of Diagnostic Trouble Code (DTC).>	Go to step **2.**
2	**CHECK TUMBLE GENERATOR VALVE RH** 1)Remove the tumble generator valve assembly. 2)Check tumble generator valve body.	Does the tumble generator valve move smoothly? (No dirt or foreign materials clogged)	Replace the tumble generator valve assembly. <Ref. to FU(DOHC TURBO)-40, Tumble Generator Valve Assembly.>	Clean tumble generator valve.

GETtheMANUALS.org

CA:DTC P1091 — TUMBLE GENERATOR VALVE SYSTEM #1 (RH) MALFUNCTION (STUCK CLOSE) —

- **DTC DETECTING CONDITION:**
  - Immediately at fault recognition

CAUTION:
After repair or replacement of faulty parts, conduct Clear Memory Mode <Ref. to EN(DOHC TURBO)-49, OPERATION, Clear Memory Mode.> and Inspection Mode <Ref. to EN(DOHC TURBO)-46, Inspection Mode.>.

	Step	Check	Yes	No
1	**CHECK ANY OTHER DTC ON DISPLAY.**	Does the Subaru Select Monitor or OBD-II general scan tool indicate P1088, P1089, P1094 or P1095?	Inspect DTC P1088, P1089, P1094 or P1095 using List of Diagnostic Trouble Code (DTC) <Ref. to EN(DOHC TURBO)-80, List of Diagnostic Trouble Code (DTC).>	Go to step **2.**
2	**CHECK TUMBLE GENERATOR VALVE RH** 1)Remove the tumble generator valve assembly. 2)Check tumble generator valve body.	Does the tumble generator valve move smoothly? (No dirt or foreign materials clogged)	Replace the tumble generator valve assembly. <Ref. to FU(DOHC TURBO)-40, Tumble Generator Valve Assembly.>	Clean tumble generator valve.

GETtheMANUALS.org

CB:DTC P1092 — TUMBLE GENERATOR VALVE SYSTEM #2 (LH) MALFUNCTION (STUCK OPEN) —

- **DTC DETECTING CONDITION:**
  - Immediately at fault recognition

CAUTION:
After repair or replacement of faulty parts, conduct Clear Memory Mode <Ref. to EN(DOHC TURBO)-49, OPERATION, Clear Memory Mode.> and Inspection Mode <Ref. to EN(DOHC TURBO)-46, Inspection Mode.>.

	Step	Check	Yes	No
1	**CHECK ANY OTHER DTC ON DISPLAY.**	Does the Subaru Select Monitor or OBD-II general scan tool indicate P1086, P1087, P1096 or P1097?	Inspect DTC P1086, P1087, P1096 or P1097 using List of Diagnostic Trouble Code (DTC) <Ref. to EN(DOHC TURBO)-80, List of Diagnostic Trouble Code (DTC).>	Go to step **2.**
2	**CHECK TUMBLE GENERATOR VALVE RH** 1)Remove the tumble generator valve assembly. 2)Check tumble generator valve body.	Does the tumble generator valve move smoothly? (No dirt or foreign materials clogged)	Replace the tumble generator valve assembly. <Ref. to FU(DOHC TURBO)-40, Tumble Generator Valve Assembly.>	Clean tumble generator valve.

GETtheMANUALS.org

CC:DTC P1093 — TUMBLE GENERATOR VALVE SYSTEM #2 (LH) MALFUNCTION (STUCK CLOSE) —

- **DTC DETECTING CONDITION:**
  - Immediately at fault recognition

CAUTION:
After repair or replacement of faulty parts, conduct Clear Memory Mode <Ref. to EN(DOHC TURBO)-49, OPERATION, Clear Memory Mode.> and Inspection Mode <Ref. to EN(DOHC TURBO)-46, Inspection Mode.>.

	Step	Check	Yes	No
1	**CHECK ANY OTHER DTC ON DISPLAY.**	Does the Subaru Select Monitor or OBD-II general scan tool indicate P1086, P1087, P1096 or P1097?	Inspect DTC P1086, P1087, P1096 or P1097 using List of Diagnostic Trouble Code (DTC) <Ref. to EN(DOHC TURBO)-80, List of Diagnostic Trouble Code (DTC).>	Go to step **2.**
2	**CHECK TUMBLE GENERATOR VALVE RH** 1)Remove the tumble generator valve assembly. 2)Check tumble generator valve body.	Does the tumble generator valve move smoothly? (No dirt or foreign materials clogged)	Replace the tumble generator valve assembly. <Ref. to FU(DOHC TURBO)-40, Tumble Generator Valve Assembly.>	Clean tumble generator valve.

GETtheMANUALS.org

CD:DTC P1094 — TUMBLE GENERATOR VALVE CIRCUIT #1 (OPEN CIRCUIT) —

- **DTC DETECTING CONDITION:**
  - Immediately at fault recognition

CAUTION:
After repair or replacement of faulty parts, conduct Clear Memory Mode <Ref. to EN(DOHC TURBO)-49, OPERATION, Clear Memory Mode.> and Inspection Mode <Ref. to EN(DOHC TURBO)-46, Inspection Mode.>.

- **WIRING DIAGRAM:**

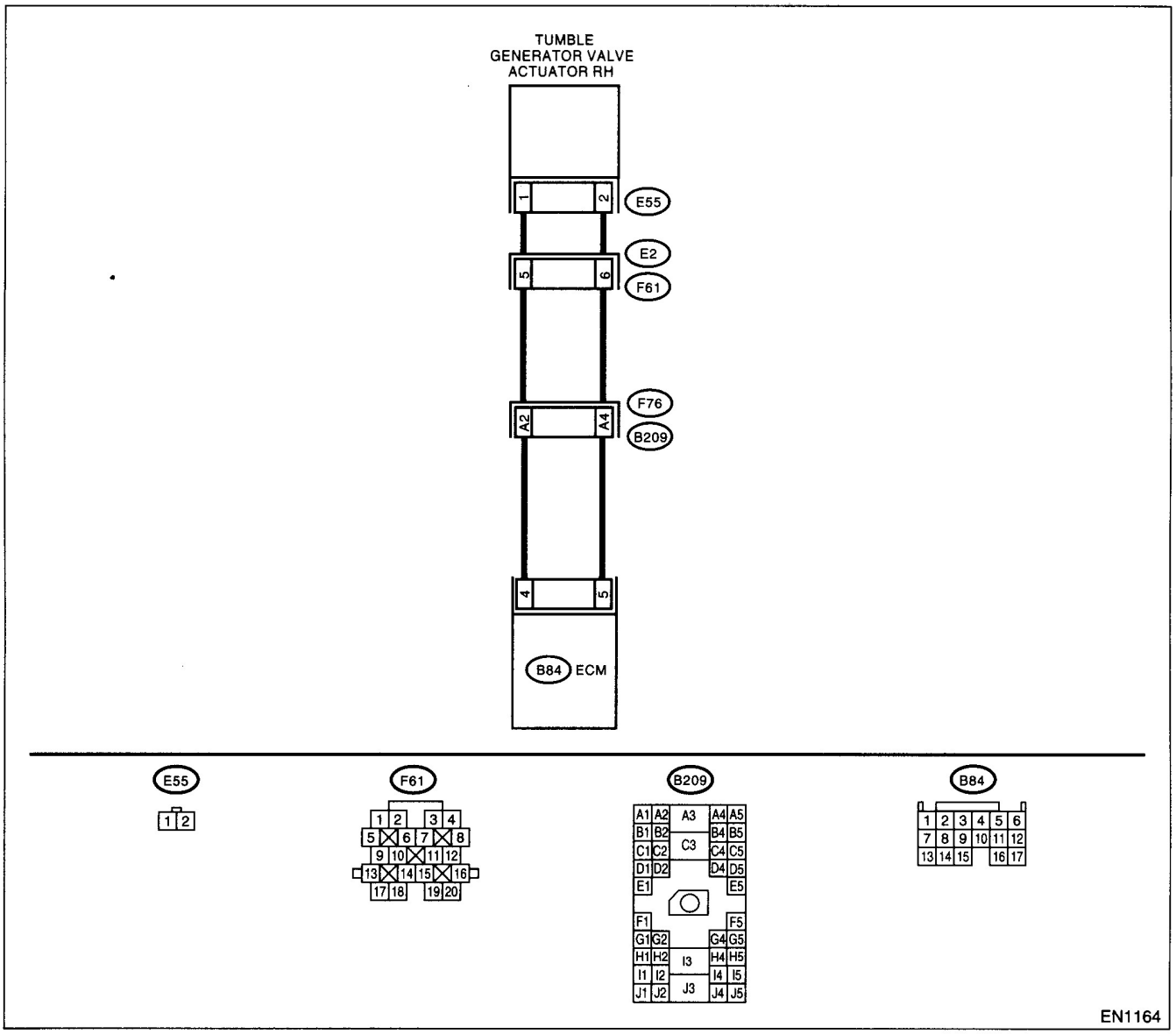

GETtheMANUALS.org

	Step	Check	Yes	No
1	**CHECK HARNESS BETWEEN ECM AND TUMBLE GENERATOR VALVE ACTUATOR CONNECTOR.** 1)Turn the ignition switch to OFF. 2)Disconnect the connector from tumble generator valve and ECM connector. 3)Measure the resistance between tumble generator valve actuator and ECM connector. ***Connector & terminal*** ***(E55) No. 1 — (B84) No.4:*** ***(E55) No. 2 — (B84) No.5:***	Is the resistance less than 1Ω?	Go to step **2.**	Repair open circuit between ECM and tumble generator valve connector. NOTE: In this case, repair the following: • Open circuit in harness between ECM and tumble generator valve actuator connector. • Poor contact in coupling connector.
2	**CHECK POOR CONTACT.** Check poor contact in tumble generator valve actuator connector.	Is there poor contact in tumble generator valve actuator connector.	Repair poor contact in tumble generator valve actuator connector.	Replace the tumble generator valve assembly. <Ref. to FU(DOHC TURBO)-40, Tumble Generator Valve Assembly.>

GETtheMANUALS.org

CE:DTC P1095 — TUMBLE GENERATOR VALVE CIRCUIT #1 (OVERCURRENT)

—

- **DTC DETECTING CONDITION:**
  - Immediately at fault recognition

CAUTION:
After repair or replacement of faulty parts, conduct Clear Memory Mode <Ref. to EN(DOHC TURBO)-49, OPERATION, Clear Memory Mode.> and Inspection Mode <Ref. to EN(DOHC TURBO)-46, Inspection Mode.>.

- **WIRING DIAGRAM:**

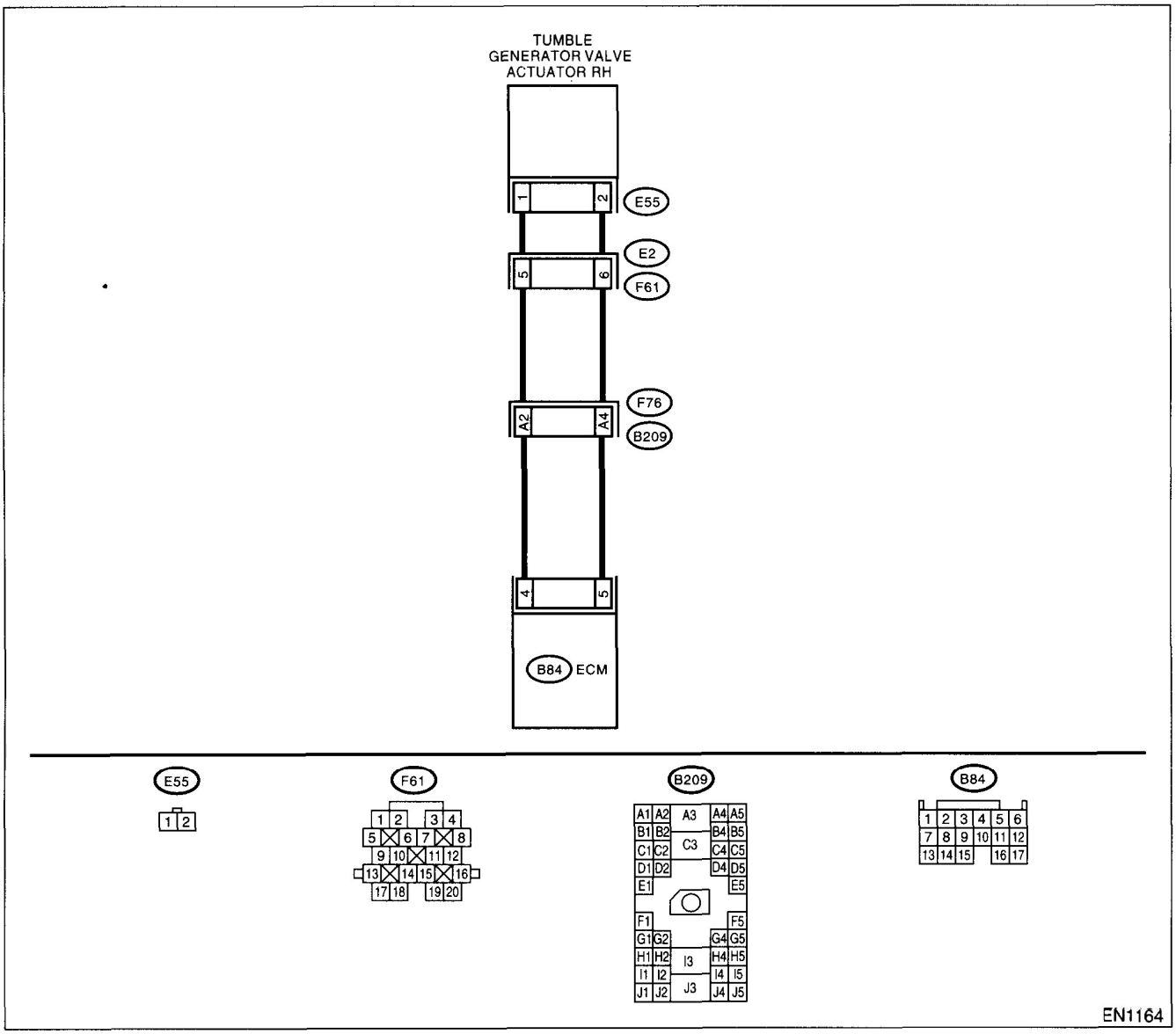

GETtheMANUALS.org

	Step	Check	Yes	No
1	**CHECK HARNESS BETWEEN ECM AND TUMBLE GENERATOR VALVE ACTUATOR CONNECTOR.** 1)Turn the ignition switch to OFF. 2)Disconnect the connector from tumble generator valve connector. 3)Measure the voltage between tumble generator valve actuator and chassis ground. ***Connector & terminal*** ***(E55) No. 1 (+) — Chassis ground (-):*** ***(E55) No. 2 (+) — Chassis ground (-):***	Is the voltage less than 5V?	Replace the tumble generator valve assembly. <Ref. to FU(DOHC TURBO)-40, Tumble Generator Valve Assembly.>	Repair battery short circuit between ECM and tumble generator valve actuator.

GETtheMANUALS.org

CF:DTC P1096 — TUMBLE GENERATOR VALVE CIRCUIT #2 (OPEN CIRCUIT)

—

- **DTC DETECTING CONDITION:**
  - Immediately at fault recognition

CAUTION:
After repair or replacement of faulty parts, conduct Clear Memory Mode <Ref. to EN(DOHC TURBO)-49, OPERATION, Clear Memory Mode.> and Inspection Mode <Ref. to EN(DOHC TURBO)-46, Inspection Mode.>.

- **WIRING DIAGRAM:**

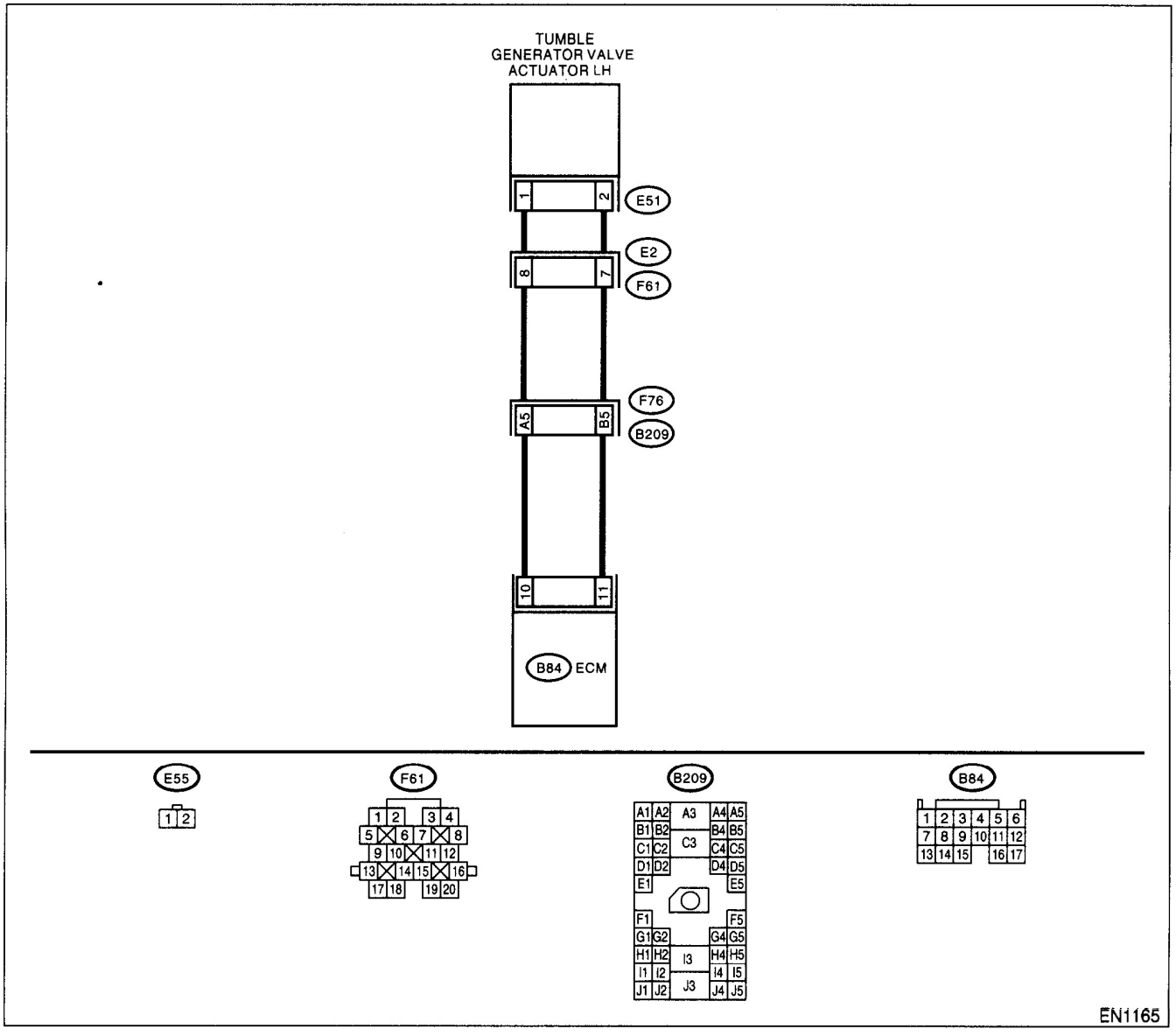

GETtheMANUALS.org

	Step	Check	Yes	No
1	**CHECK HARNESS BETWEEN ECM AND TUMBLE GENERATOR VALVE ACTUATOR CONNECTOR.** 1)Turn the ignition switch to OFF. 2)Disconnect the connector from tumble generator valve and ECM connector. 3)Measure the resistance between tumble generator valve actuator and ECM connector. ***Connector & terminal*** ***(E51) No. 1 — (B84) No. 10:*** ***(E51) No. 2 — (B84) No. 11:***	Is the resistance less than 1Ω?	Go to step **2.**	Repair open circuit between ECM and tumble generator valve connector. NOTE: In this case, repair the following: • Open circuit in harness between ECM and tumble generator valve actuator connector. • Poor contact in coupling connector.
2	**CHECK POOR CONTACT.** Check poor contact in tumble generator valve actuator connector.	Is there poor contact in tumble generator valve actuator connector.	Repair poor contact in tumble generator valve actuator connector.	Replace the tumble generator valve assembly. <Ref. to FU(DOHC TURBO)-40, Tumble Generator Valve Assembly.>

GET theMANUALS.org

CG:DTC P1097 — TUMBLE GENERATOR VALVE CIRCUIT #2 (OVERCURRENT)

—

- **DTC DETECTING CONDITION:**
  - Immediately at fault recognition

CAUTION:
After repair or replacement of faulty parts, conduct Clear Memory Mode <Ref. to EN(DOHC TURBO)-49, OPERATION, Clear Memory Mode.> and Inspection Mode <Ref. to EN(DOHC TURBO)-46, Inspection Mode.>.

- **WIRING DIAGRAM:**

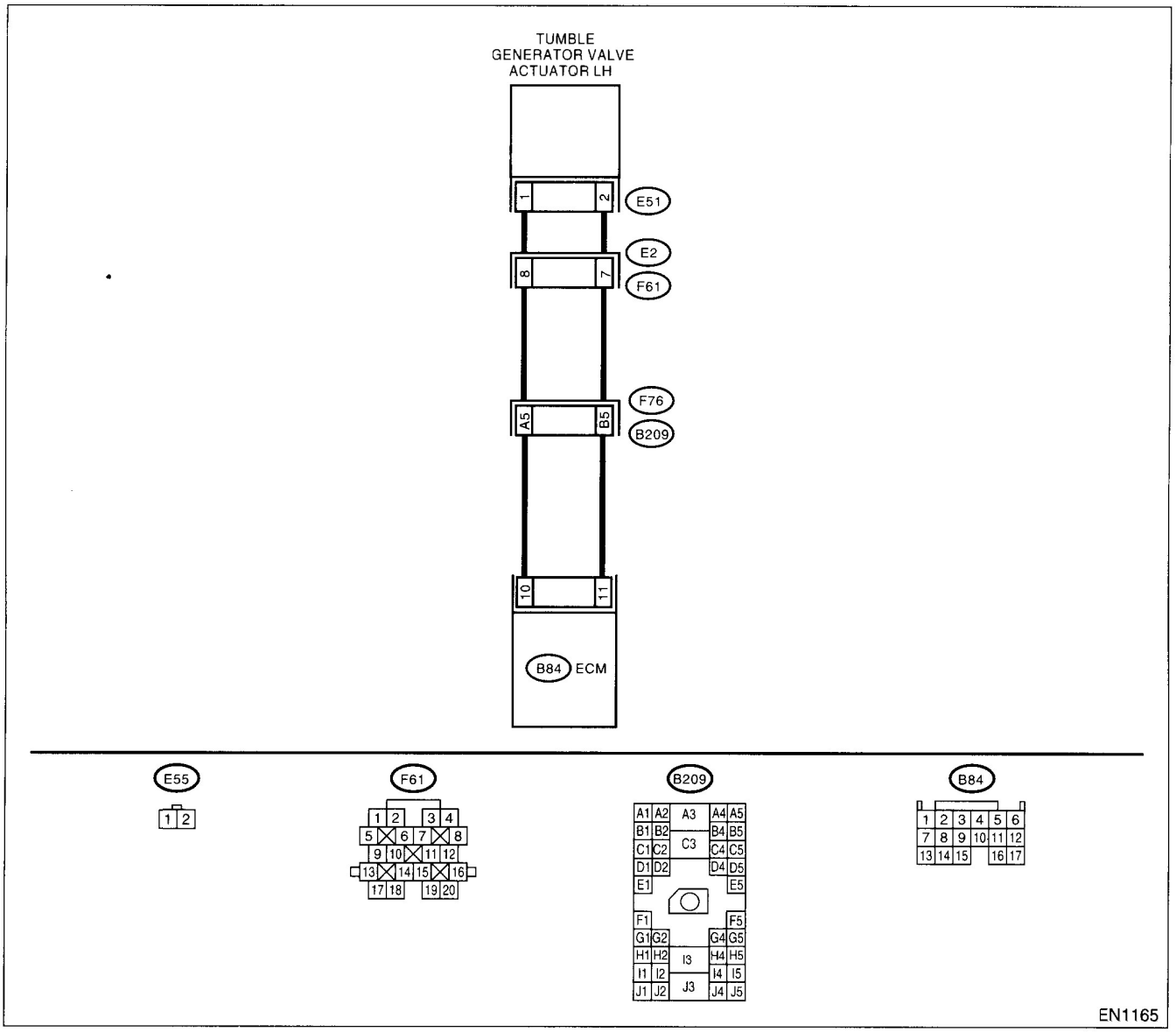

GETtheMANUALS.org

	Step	Check	Yes	No
1	**CHECK HARNESS BETWEEN ECM AND TUMBLE GENERATOR VALVE ACTUATOR CONNECTOR.** 1)Turn the ignition switch to OFF. 2)Disconnect the connector from tumble generator valve connector. 3)Measure the voltage between tumble generator valve actuator and chassis ground. ***Connector & terminal*** ***(E51) No. 1 (+) — Chassis ground (-):*** ***(E51) No. 2 (+) — Chassis ground (-):***	Is the voltage less than 5V?	Replace the tumble generator valve assembly. <Ref. to FU(DOHC TURBO)-40, Tumble Generator Valve Assembly.>	Repair battery short circuit between ECM and tumble generator valve actuator.

CH:DTC P1110 — ATMOSPHERIC PRESSURE SENSOR CIRCUIT LOW INPUT —

- **DTC DETECTING CONDITION:**
  - Two consecutive driving cycles with fault

CAUTION:
After repair or replacement of faulty parts, conduct Clear Memory Mode <Ref. to EN(DOHC TURBO)-49, OPERATION, Clear Memory Mode.> and Inspection Mode <Ref. to EN(DOHC TURBO)-46, Inspection Mode.>.

	Step	Check	Yes	No
1	**CHECK ANY OTHER DTC ON DISPLAY.**	Does the Subaru Select Monitor or OBD-II general scan tool indicate DTC P1110?	Replace the ECM. <Ref. to FU(DOHC TURBO)-47, Engine Control Module.> NOTE: Atmospheric pressure sensor is built into ECM.	It is not necessary to inspect DTC P1110.

CI: DTC P1111 — ATMOSPHERIC PRESSURE SENSOR CIRCUIT HIGH INPUT —

- **DTC DETECTING CONDITION:**
  - Two consecutive driving cycles with fault

CAUTION:
After repair or replacement of faulty parts, conduct Clear Memory Mode <Ref. to EN(DOHC TURBO)-49, OPERATION, Clear Memory Mode.> and Inspection Mode <Ref. to EN(DOHC TURBO)-46, Inspection Mode.>.

	Step	Check	Yes	No
1	**CHECK ANY OTHER DTC ON DISPLAY.**	Does the Subaru Select Monitor or OBD-II general scan tool indicate DTC P1111?	Replace the ECM. <Ref. to FU(DOHC TURBO)-47, Engine Control Module.> NOTE: Atmospheric pressure sensor is built into ECM.	It is not necessary to inspect DTC P1111.

GETtheMANUALS.org

CJ:DTC P1112 — ATMOSPHERIC PRESSURE SENSOR CIRCUIT RANGE/PERFORMANCE PROBLEM —

- **DTC DETECTING CONDITION:**
  - Two consecutive driving cycles with fault

CAUTION:
After repair or replacement of faulty parts, conduct Clear Memory Mode <Ref. to EN(DOHC TURBO)-49, OPERATION, Clear Memory Mode.> and Inspection Mode <Ref. to EN(DOHC TURBO)-46, Inspection Mode.>.

Step		Check	Yes	No
1	CHECK ANY OTHER DTC ON DISPLAY.	Does the Subaru Select Monitor or OBD-II general scan tool indicate DTC P0106, P0107, P0108, P1110 or P1111?	Inspect DTC P0106, P0107, P0108, P1110 or P1111 using "List of Diagnostic Trouble Code (DTC)".<Ref. to EN(DOHC TURBO)-80, List of Diagnostic Trouble Code (DTC).>	Replace the ECM. <Ref. to FU(DOHC TURBO)-47, Engine Control Module.> NOTE: Atmospheric pressure sensor is built into ECM.

GETtheMANUALS.org

GETtheMANUALS.org

CK: DTC P1130 — FRONT OXYGEN (A/F) SENSOR CIRCUIT MALFUNCTION (OPEN CIRCUIT) —

- **DTC DETECTING CONDITION:**
  - Immediately at fault recognition

CAUTION:
After repair or replacement of faulty parts, conduct Clear Memory Mode <Ref. to EN(DOHC TURBO)-49, OPERATION, Clear Memory Mode.> and Inspection Mode <Ref. to EN(DOHC TURBO)-46, Inspection Mode.>.

- **WIRING DIAGRAM:**

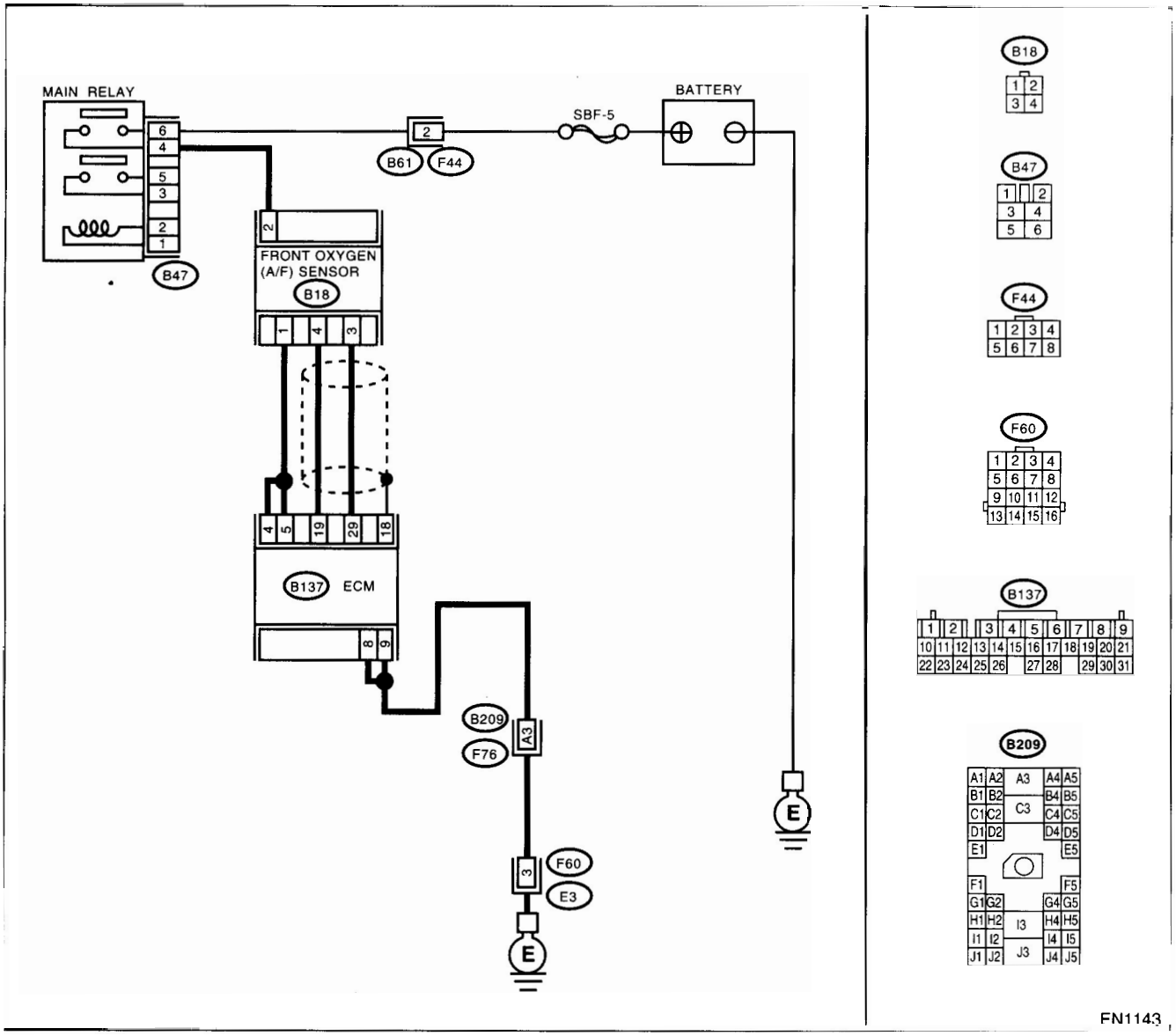

GETtheMANUALS.org

	Step	Check	Yes	No
1	**CHECK HARNESS BETWEEN ECM AND FRONT OXYGEN (A/F) SENSOR CONNECTOR.** 1)Turn the ignition switch to OFF. 2)Disconnect the connectors from ECM and front oxygen (A/F) sensor connector. 3)Measure the resistance of harness between ECM and front oxygen (A/F) sensor connector. ***Connector & terminal*** ***(B137) No. 29 — (B18) No. 3:*** ***(B137) No. 19 — (B18) No. 4:***	Is the resistance less than 1 Ω?	Go to step **2.**	Repair harness and connector. NOTE: In this case, repair the following: • Open circuit in harness between ECM and front oxygen (A/F) sensor connector • Poor contact in front oxygen (A/F) sensor connector • Poor contact in ECM connector
2	**CHECK POOR CONTACT.** Check poor contact in front oxygen (A/F) sensor connector.	Is there poor contact in front oxygen (A/F) sensor connector?	Repair poor contact in front oxygen (A/F) sensor connector.	Replace the front oxygen (A/F) sensor. <Ref. to FU(DOHC TURBO)-42, Front Oxygen (A/F) Sensor.>

GETtheMANUALS.org

CL: DTC P1131 — FRONT OXYGEN (A/F) SENSOR CIRCUIT MALFUNCTION (SHORT CIRCUIT) —

- **DTC DETECTING CONDITION:**
  - Immediately at fault recognition

CAUTION:
After repair or replacement of faulty parts, conduct Clear Memory Mode <Ref. to EN(DOHC TURBO)-49, OPERATION, Clear Memory Mode.> and Inspection Mode <Ref. to EN(DOHC TURBO)-46, Inspection Mode.>.

- **WIRING DIAGRAM:**

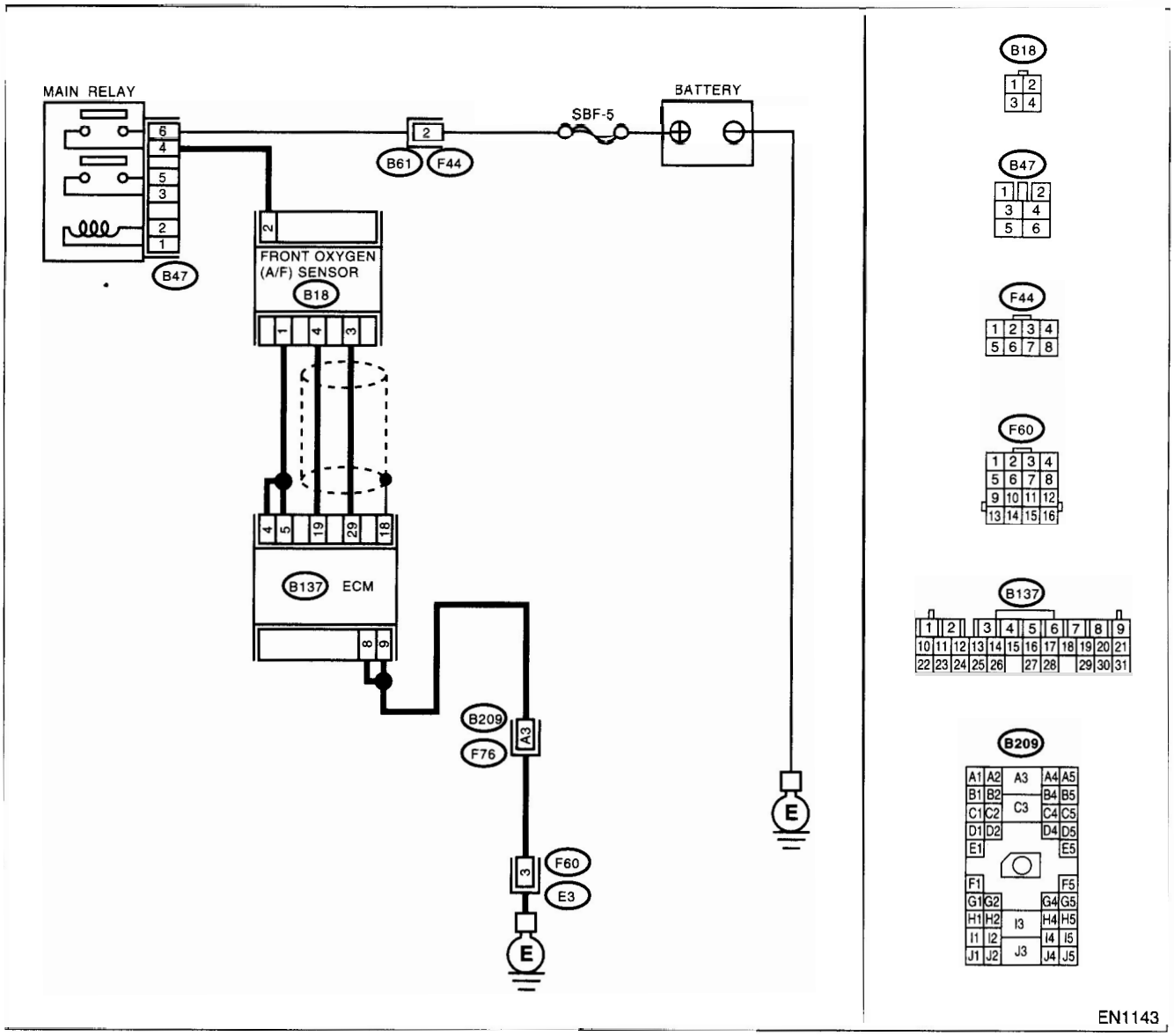

EN1143

GETtheMANUALS.org

	Step	Check	Yes	No
1	**CHECK HARNESS BETWEEN ECM AND FRONT OXYGEN (A/F) SENSOR CONNECTOR.** 1)Turn the ignition switch to OFF. 2)Disconnect the connector from ECM. 3)Measure the resistance of harness between ECM connector and chassis ground. ***Connector & terminal*** ***(B137) No. 19 — Chassis ground:***	Is the resistance more than 10 Ω?	Go to step **2.**	Repair ground short circuit in harness between ECM and front oxygen (A/F) sensor connector.
2	**CHECK HARNESS BETWEEN ECM AND FRONT OXYGEN (A/F) SENSOR CONNECTOR.** Measure the resistance of harness between ECM connector and chassis ground. ***Connector & terminal*** ***(B137) No. 29 — Chassis ground:***	Is the resistance more than 10 Ω?	Go to step **3.**	Repair ground short circuit in harness between ECM and front oxygen (A/F) sensor connector.
3	**CHECK OUTPUT SIGNAL FOR ECM.** 1)Connect the connector to ECM. 2)Turn the ignition switch to ON. 3)Measure the voltage between ECM connector and chassis ground. ***Connector & terminal*** ***(B137) No. 19 (+) — Chassis ground (–):***	Is the voltage more than 4.5 V?	Go to step **4.**	Go to step **5.**
4	**CHECK OUTPUT SIGNAL FOR ECM.** Measure the voltage between ECM connector and chassis ground. ***Connector & terminal*** ***(B137) No. 19 (+) — Chassis ground (–):***	Is the voltage more than 10 V?	Repair battery short circuit in harness between ECM and front oxygen (A/F) sensor connector.	Repair poor contact in ECM connector.
5	**CHECK OUTPUT SIGNAL FOR ECM.** Measure the voltage between ECM connector and chassis ground. ***Connector & terminal*** ***(B137) No. 29 (+) — Chassis ground (–):***	Is the voltage more than 4.95 V?	Go to step **6.**	Replace the front oxygen (A/F) sensor. <Ref. to FU(DOHC TURBO)-42, Front Oxygen (A/F) Sensor.>
6	**CHECK OUTPUT SIGNAL FOR ECM.** Measure the voltage between ECM connector and chassis ground. ***Connector & terminal*** ***(B137) No. 29 (+) — Chassis ground (–):***	Is the voltage more than 10 V?	Repair battery short circuit in harness between ECM and front oxygen (A/F) sensor connector.	Repair poor contact in ECM connector.

GETtheMANUALS.org

CM:DTC P1134 — FRONT OXYGEN (A/F) SENSOR MICRO-COMPUTER PROBLEM —

- **DTC DETECTING CONDITION:**
  - Immediately at fault recognition

CAUTION:
After repair or replacement of faulty parts, conduct Clear Memory Mode <Ref. to EN(DOHC TURBO)-49, OPERATION, Clear Memory Mode.> and Inspection Mode <Ref. to EN(DOHC TURBO)-46, Inspection Mode.>.

- **WIRING DIAGRAM:**

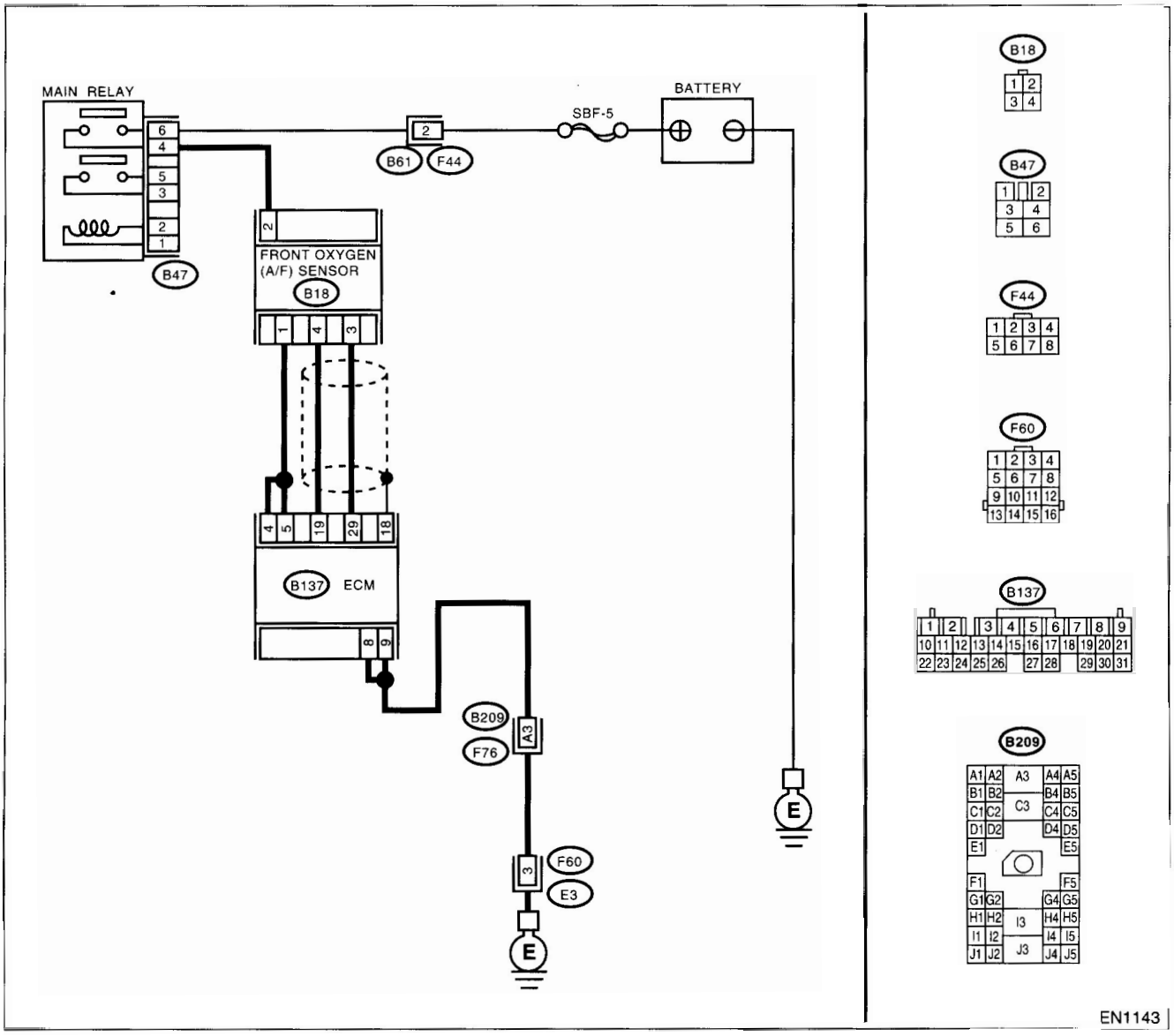

Step		Check	Yes	No
1	CHECK ANY OTHER DTC ON DISPLAY.	Does the Subaru Select Monitor or OBD-II general scan tool indicate DTC P1134?	Replace the ECM. <Ref. to FU(DOHC TURBO)-47, Engine Control Module.>	It is not necessary to inspect DTC P1134.

GETtheMANUALS.org

GETtheMANUALS.org

CN: DTC P1139 — FRONT OXYGEN (A/F) SENSOR #1 HEATER CIRCUIT RANGE/PERFORMANCE PROBLEM —

- **DTC DETECTING CONDITION:**
  - Two consecutive driving cycles with fault

CAUTION:
After repair or replacement of faulty parts, conduct Clear Memory Mode <Ref. to EN(DOHC TURBO)-49, OPERATION, Clear Memory Mode.> and Inspection Mode <Ref. to EN(DOHC TURBO)-46, Inspection Mode.>.

- **WIRING DIAGRAM:**

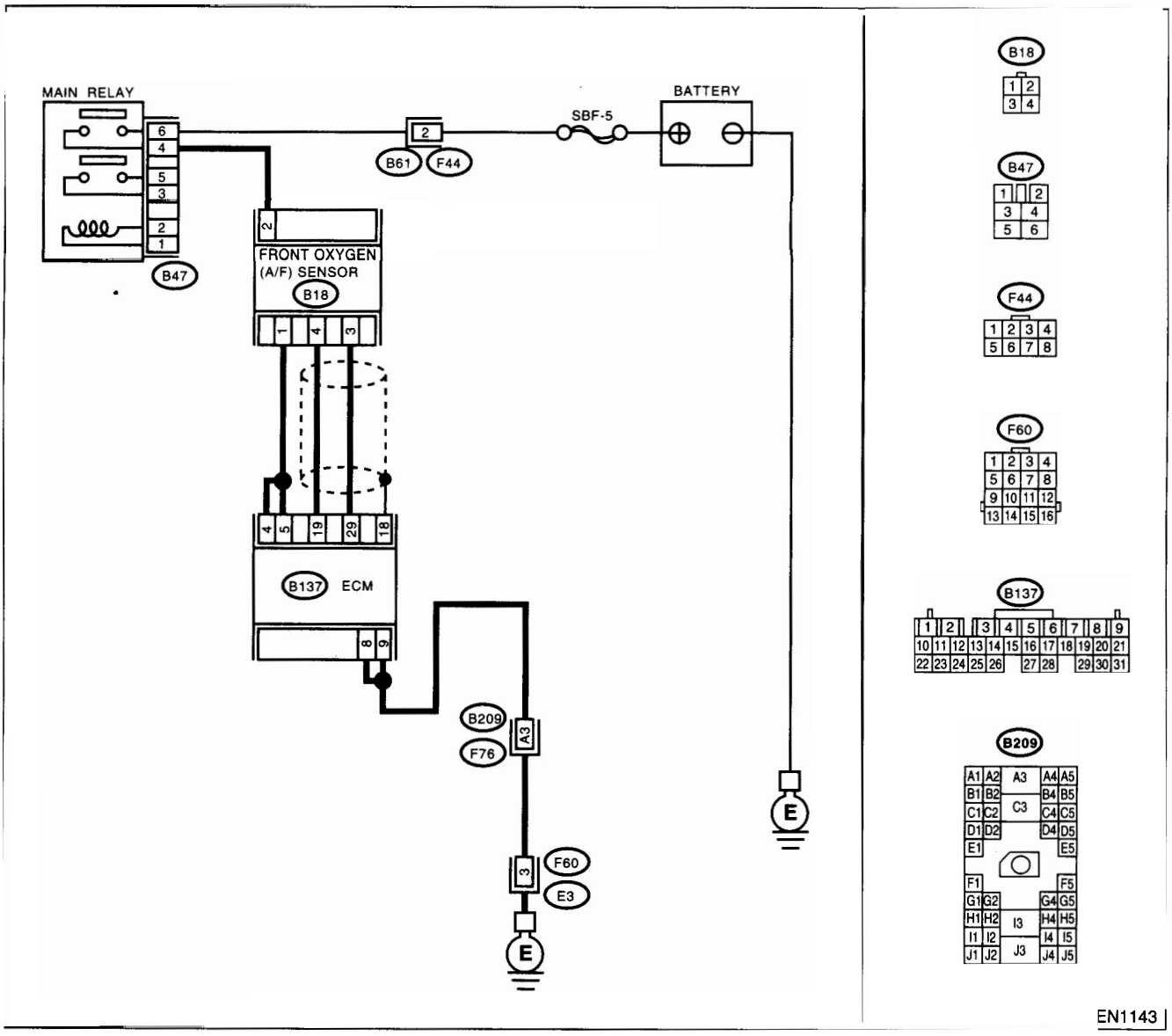

GETtheMANUALS.org

	Step	Check	Yes	No
1	**CHECK HARNESS BETWEEN ECM AND FRONT OXYGEN (A/F) SENSOR CONNECTOR.** 1)Start the engine, and warm-up the engine. 2)Turn the ignition switch to OFF. 3)Disconnect the connectors from ECM and front oxygen (A/F) sensor. 4)Measure the resistance of harness between ECM and front oxygen (A/F) sensor connector. ***Connector & terminal*** ***(B137) No. 5 — (B18) No. 1:*** ***(B137) No. 4 — (B18) No. 1:***	Is the resistance less than 1 Ω?	Go to step **2.**	Repair open circuit in harness between ECM and front oxygen (A/F) sensor connector.
2	**CHECK HARNESS BETWEEN ECM AND FRONT OXYGEN (A/F) SENSOR CONNECTOR.** Measure the resistance of harness between ECM and front oxygen (A/F) sensor connector. ***Connector & terminal*** ***(B137) No. 19 — (B18) No. 4:*** ***(B137) No. 29 — (B18) No. 3:***	Is the resistance less than 1 Ω?	Go to step **3.**	Repair open circuit in harness between ECM and front oxygen (A/F) sensor connector.
3	**CHECK HARNESS BETWEEN ECM AND FRONT OXYGEN (A/F) SENSOR CONNECTOR.** Measure the resistance of harness between main relay and front oxygen (A/F) sensor connector. ***Connector & terminal*** ***(B47) No. 4 — (B18) No. 2:***	Is the resistance less than 1 Ω?	Go to step **4.**	Repair open circuit in harness between ECM and front oxygen (A/F) sensor connector.
4	**CHECK FRONT OXYGEN (A/F) SENSOR.** Measure the resistance between front oxygen (A/F) sensor connector terminals. ***Terminals*** ***No. 2 — No. 1:***	Is the resistance less than 5 Ω?	Go to step **5.**	Replace the front oxygen (A/F) sensor. <Ref. to FU(DOHC TURBO)-42, Front Oxygen (A/F) Sensor.>
5	**CHECK POOR CONTACT.** Check poor contact in ECM and front oxygen (A/F) sensor connector.	Is there poor contact in ECM or front oxygen (A/F) sensor connector?	Repair poor contact in ECM or front oxygen (A/F) sensor connector.	Replace the front oxygen (A/F) sensor. <Ref. to FU(DOHC TURBO)-42, Front Oxygen (A/F) Sensor.>

GETtheMANUALS.org

CO:DTC P1141 — MASS AIR FLOW SENSOR CIRCUIT RANGE/PERFORMANCE PROBLEM (LOW INPUT) —

- **DTC DETECTING CONDITION:**
  - Two consecutive driving cycles with fault
- **TROUBLE SYMPTOM:**
  - Erroneous idling
  - Engine stalls.
  - Poor driving performance

CAUTION:
After repair or replacement of faulty parts, conduct Clear Memory Mode <Ref. to EN(DOHC TURBO)-49, OPERATION, Clear Memory Mode.> and Inspection Mode <Ref. to EN(DOHC TURBO)-46, Inspection Mode.>.

- **WIRING DIAGRAM:**

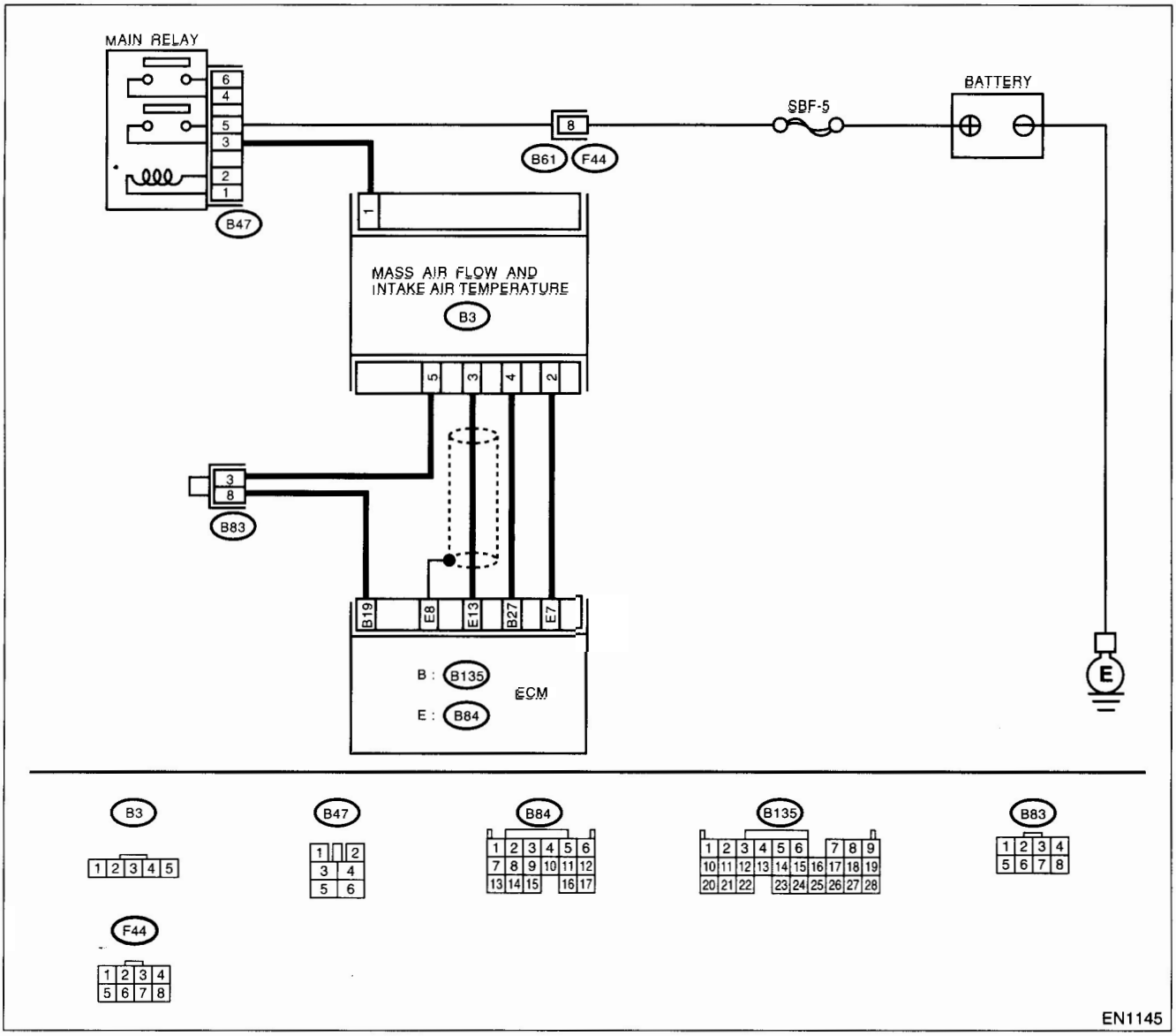

GETtheMANUALS.org

	Step	Check	Yes	No
1	**CHECK ANY OTHER DTC ON DISPLAY.**	Does Subaru select monitor or OBD-II general scan tool indicate DTC P0102 or P0103?	Inspect DTC P0102 or P0103 using "Diagnostics Chart with Trouble Code" <Ref. to EN(DOHC TURBO)-80, List of Diagnostic Trouble Code (DTC).> NOTE: In this case, it is not necessary to inspect DTC P1141.	Replace the mass air flow and intake air temperature sensor.

GETtheMANUALS.org

CP:DTC P1142 — THROTTLE POSITION SENSOR CIRCUIT RANGE/PERFORMANCE PROBLEM (LOW INPUT) —

- **DTC DETECTING CONDITION:**
  - Two consecutive driving cycles with fault
- **TROUBLE SYMPTOM:**
  - Erroneous idling
  - Engine stalls.
  - Poor driving performance

CAUTION:
After repair or replacement of faulty parts, conduct Clear Memory Mode <Ref. to EN(DOHC TURBO)-49, OPERATION, Clear Memory Mode.> and Inspection Mode <Ref. to EN(DOHC TURBO)-46, Inspection Mode.>.

- **WIRING DIAGRAM:**

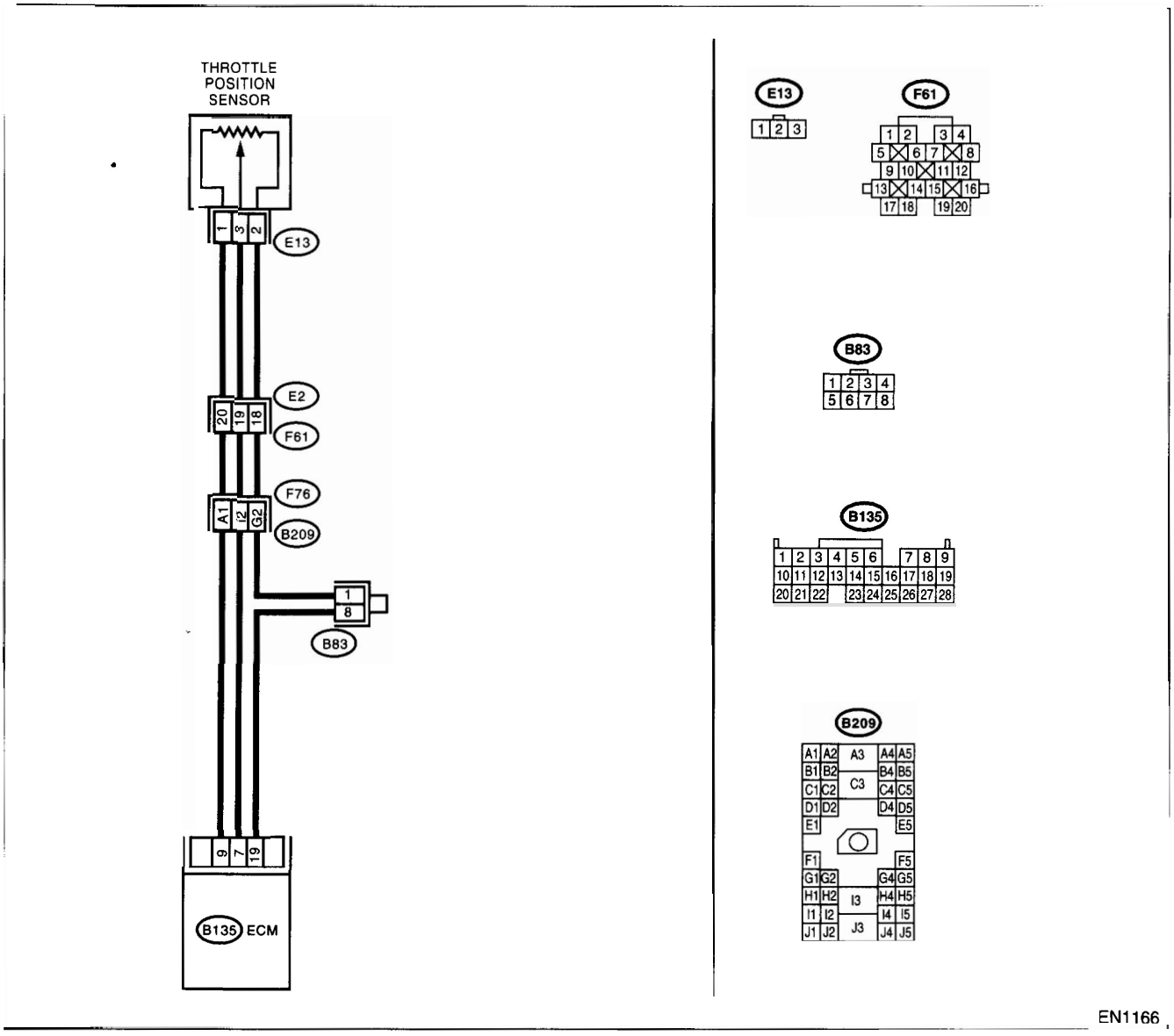

GETtheMANUALS.org

Step		Check	Yes	No
1	CHECK ANY OTHER DTC ON DISPLAY.	Does the Subaru Select Monitor or OBD-II general scan tool indicate DTC P0122 or P0123?	Inspect DTC P0122 or P0123 using "List of Diagnostic Trouble Code (DTC)". <Ref. to EN(DOHC TURBO)-80, List of Diagnostic Trouble Code (DTC).> NOTE: In this case, it is not necessary to inspect DTC P1142.	Replace the throttle position sensor. <Ref. to FU(DOHC TURBO)-33, Throttle Position Sensor.>

GETtheMANUALS.org

CQ:DTC P1146 — PRESSURE SENSOR CIRCUIT RANGE/PERFORMANCE PROBLEM (HIGH INPUT) —

- **DTC DETECTING CONDITION:**
  - Two consecutive driving cycles with fault

CAUTION:
After repair or replacement of faulty parts, conduct Clear Memory Mode <Ref. to EN(DOHC TURBO)-49, OPERATION, Clear Memory Mode.> and Inspection Mode <Ref. to EN(DOHC TURBO)-46, Inspection Mode.>.

- **WIRING DIAGRAM:**

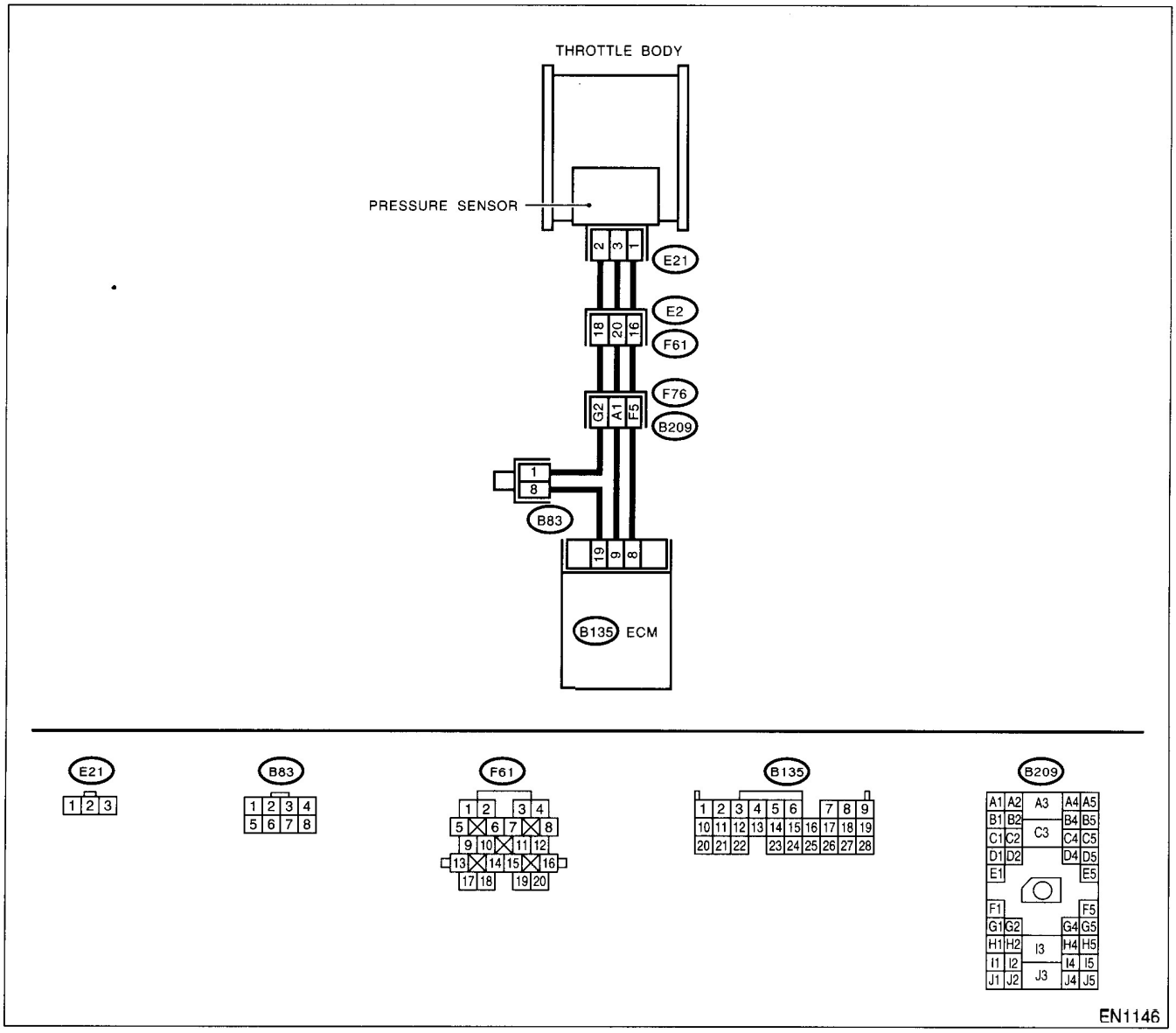

GETtheMANUALS.org

	Step	Check	Yes	No
1	**CHECK ANY OTHER DTC ON DISPLAY.** NOTE: In this case, it is not necessary to inspect DTC P0106.	Does the Subaru Select Monitor or OBD-II general scan tool indicate DTC P0107, P0108 or P1112?	Inspect DTC P0107, P0108 or P1112 using "List of Diagnostic Trouble Code (DTC)". <Ref. to EN(DOHC TURBO)-80, List of Diagnostic Trouble Code (DTC).>	Go to step **2.**
2	**CHECK AIR INTAKE SYSTEM.**	Are there holes, loose bolts or disconnection of hose on air intake system?	Repair air intake system.	Go to step **3.**
3	**CHECK PRESSURE SENSOR.** 1)Start the engine and warm-up engine until coolant temperature is greater than 60°C (140°F). 2)Place the shift lever in the selector lever in "N" or "P" position. 3)Turn the A/C switch to OFF. 4)Turn all accessory switches to OFF. 5)Read the data of pressure sensor signal using Subaru Select Monitor or OBD-II general scan tool. NOTE: •Subaru Select Monitor For detailed operation procedure, refer to the "READ CURRENT DATA FOR ENGINE". <Ref. to EN(DOHC TURBO)-38, Subaru Select Monitor.> •OBD-II general scan tool For detailed operation procedure, refer to the OBD-II General Scan Tool Instruction Manual. Specification: •Intake manifold absolute pressure ***Ignition ON*** ***73.3 — 106.6 kPa (550 — 800 mmHg, 21.65 — 31.50 inHg)*** ***Idling*** ***20.0 — 46.7 kPa (150 — 350 mmHg, 5.91 — 13.78 inHg)***	Is the value within the specifications?	Go to step **4.**	Replace the pressure sensor. <Ref. to FU(DOHC TURBO)-35, Pressure Sensor.>
4	**CHECK THROTTLE POSITION.** Read the data of throttle position signal using Subaru Select Monitor or OBD-II general scan tool. NOTE: •Subaru Select Monitor For detailed operation procedure, refer to the "READ CURRENT DATA FOR ENGINE". <Ref. to EN(DOHC TURBO)-38, Subaru Select Monitor.> •OBD-II general scan tool For detailed operation procedure, refer to the OBD-II General Scan Tool Instruction Manual.	Is the throttle positioning ratio equal to or less than 5% when throttle is fully closed?	Go to step **5.**	Adjust or replace the throttle position sensor. <Ref. to FU(DOHC TURBO)-33, Throttle Position Sensor.>
5	**CHECK THROTTLE POSITION.**	Is the throttle positioning ratio equal to or more than 85% when throttle is fully open?	Replace the pressure sensor. <Ref. to FU(DOHC TURBO)-35, Pressure Sensor.>	Replace the throttle position sensor. <Ref. to FU(DOHC TURBO)-33, Throttle Position Sensor.>

GETtheMANUALS.org

CR:DTC P1230 — FUEL PUMP CONTROLLER MALFUNCTION —

- **DTC DETECTING CONDITION:**
  - Two consecutive driving cycles with fault

CAUTION:
After repair or replacement of faulty parts, conduct Clear Memory Mode <Ref. to EN(DOHC TURBO)-49, OPERATION, Clear Memory Mode.> and Inspection Mode <Ref. to EN(DOHC TURBO)-46, Inspection Mode.>.

- **WIRING DIAGRAM:**

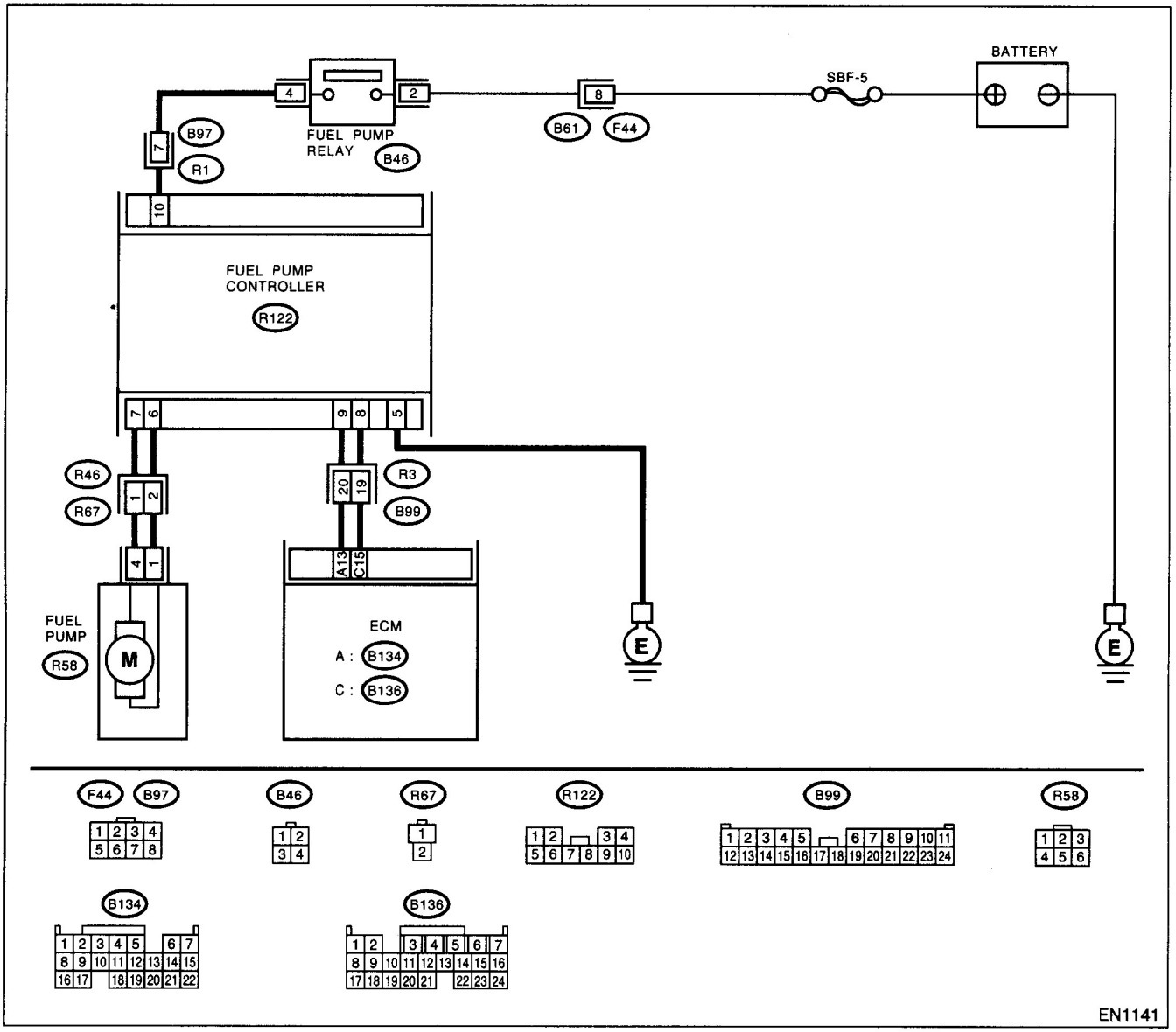

GETTHEMANUALS.org

Step	Check	Yes	No
CHECK POWER SUPPLY CIRCUIT TO FUEL PUMP CONTROLLER. 1)Turn the ignition switch to OFF. 2)Disconnect the connector from fuel pump controller. 3)Turn the ignition switch to ON. 4)Measure the voltage between fuel pump controller and chassis ground. ***Connector & terminal*** ***(R122) No. 10 (+) — Chassis ground (-):***	the voltage more than 10V?	Go to step **2.**	Repair power supply circuit. NOTE: In this case repair the following: • Open or ground short circuit in harness between fuel pump relay and fuel pump controller. • Poor contact in fuel pump controller connector. • Poor contact in fuel pump relay connector.
CHECK GROUND CIRCUIT OF FUEL PUMP CONTROLLER. 1)Turn the ignition switch to OFF. 2)Measure the resistance of harness between fuel pump controller and chassis ground. ***Connector & terminal*** ***(R122) No. 5 — Chassis ground:***	the resistance less than 5 ?	Go to step **3.**	Repair harness and connector. NOTE: In this case, repair the following: • Open circuit between fuel pump controller and chassis ground. • Poor contact in fuel pump controller connector.
CHECK HARNESS BETWEEN FUEL PUMP CONTROLLER AND FUEL PUMP CONNECTOR. 1)Disconnect the connector from fuel pump. 2)Measure the resistance of harness between fuel pump controller and fuel pump connector. ***Connector & terminal*** ***(R122) No. 7 — (R58) No. 2:*** ***(R122) No. 6 — (R58) No. 1:***	the resistance less than 1 ?	Go to step **4.**	Repair open circuit between fuel pump controller and fuel pump.
CHECK HARNESS BETWEEN FUEL PUMP CONTROLLER AND FUEL PUMP CONNECTOR. Measure the resistance of harness between fuel pump controller and chassis ground. ***Connector & terminal*** ***(R122) No. 7 — Chassis ground:*** ***(R122) No. 6 — Chassis ground:***	the resistance more than 1M ?	Go to step **5.**	Repair ground short circuit between fuel pump controller and fuel pump.
CHECK HARNESS BETWEEN FUEL PUMP CONTROLLER AND ECM CONNECTOR. 1)Turn the ignition switch to OFF. 2)Disconnect the connector from ECM. 3)Measure the resistance of harness between fuel pump controller and ECM connector. ***Connector & terminal*** ***(R122) No. 9 — (B134) No. 13:*** ***(R122) No. 8 — (B136) No. 16:***	the resistance less than 1 ?	Go to step **6.**	Repair harness and connector. NOTE: In this case, repair the following: • Open circuit between fuel pump controller and ECM. • Poor contact in fuel pump controller and ECM connector.

GETtheMANUALS.org

	Step	Check	Yes	No
6	**CHECK HARNESS BETWEEN FUEL PUMP CONTROLLER AND ECM CONNECTOR.** Measure the resistance of harness between fuel pump controller and chassis ground. ***Connector & terminal*** ***(R122) No. 9 — Chassis ground:*** ***(R122) No. 8 — Chassis ground:***	Is the resistance more than 1M Ω?	Go to step **7.**	Repair ground short circuit between fuel pump controller and ECM.
7	**CHECK POOR CONTACT.** Check poor contact in ECM and fuel pump controller connector.	Is there poor contact in ECM and fuel pump controller connector.	Repair poor contact in ECM and fuel pump controller.	Replace the fuel pump controller. <Ref. to FU(DOHC TURBO)-50, Fuel Pump Controller.>

GETtheMANUALS.org

GETtheMANUALS.org

CS:DTC P1244 — WASTEGATE CONTROL SOLENOID VALVE RANGE/PERFORMANCE PROBLEM (LOW INPUT) —

- **DTC DETECTING CONDITION:**
  - Two consecutive driving cycles with fault

CAUTION:
After repair or replacement of faulty parts, conduct Clear Memory Mode <Ref. to EN(DOHC TURBO)-49, OPERATION, Clear Memory Mode.> and Inspection Mode <Ref. to EN(DOHC TURBO)-46, Inspection Mode.>.

- **WIRING DIAGRAM:**

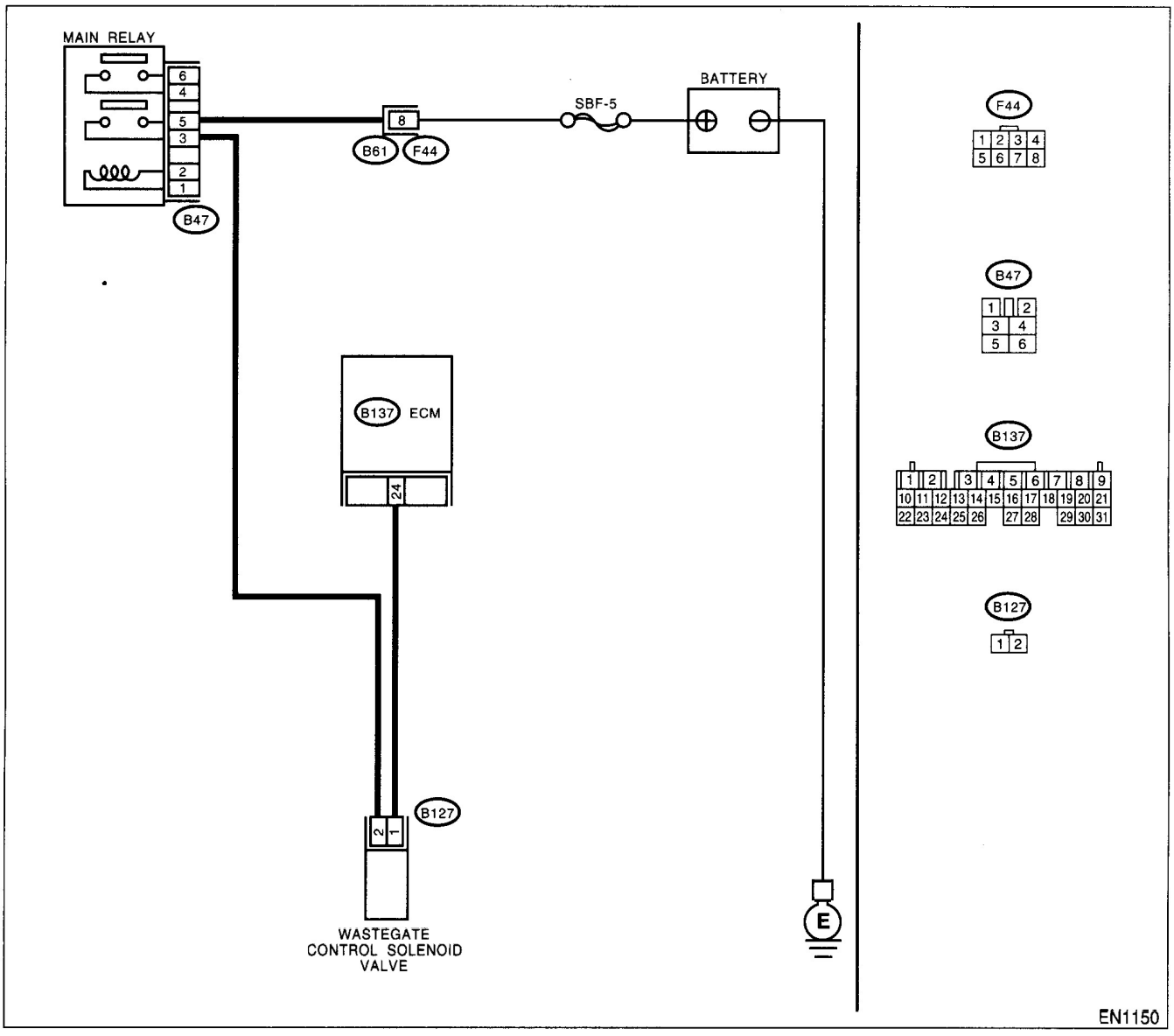

GETtheMANUALS.org

Step		Check	Yes	No
1	CHECK ANY OTHER DTC ON DISPLAY.	Does the Subaru Select Monitor or OBD-II general scan tool indicate DTC P0245 or P0246?	Inspect DTC P0245 or P0246 using "List of Diagnostic Trouble Code (DTC)". <Ref. to EN(DOHC TURBO)-80, List of Diagnostic Trouble Code (DTC).> NOTE: In this case, it is not necessary to inspect DTC P1244.	Replace the wastegate control solenoid valve. <Ref. to FU(DOHC TURBO)-41, Wastegate Control Solenoid Valve.>

GETtheMANUALS.org

CT:DTC P1245 — WASTEGATE CONTROL SOLENOID VALVE MALFUNCTION (FAIL-SAFE) —

- **DTC DETECTING CONDITION:**
  - Immediately at fault recognition

CAUTION:
After repair or replacement of faulty parts, conduct Clear Memory Mode <Ref. to EN(DOHC TURBO)-49, Operation.> and Inspection Mode <Ref. to EN(DOHC TURBO)-46, Inspection Mode.>.

- **WIRING DIAGRAM:**

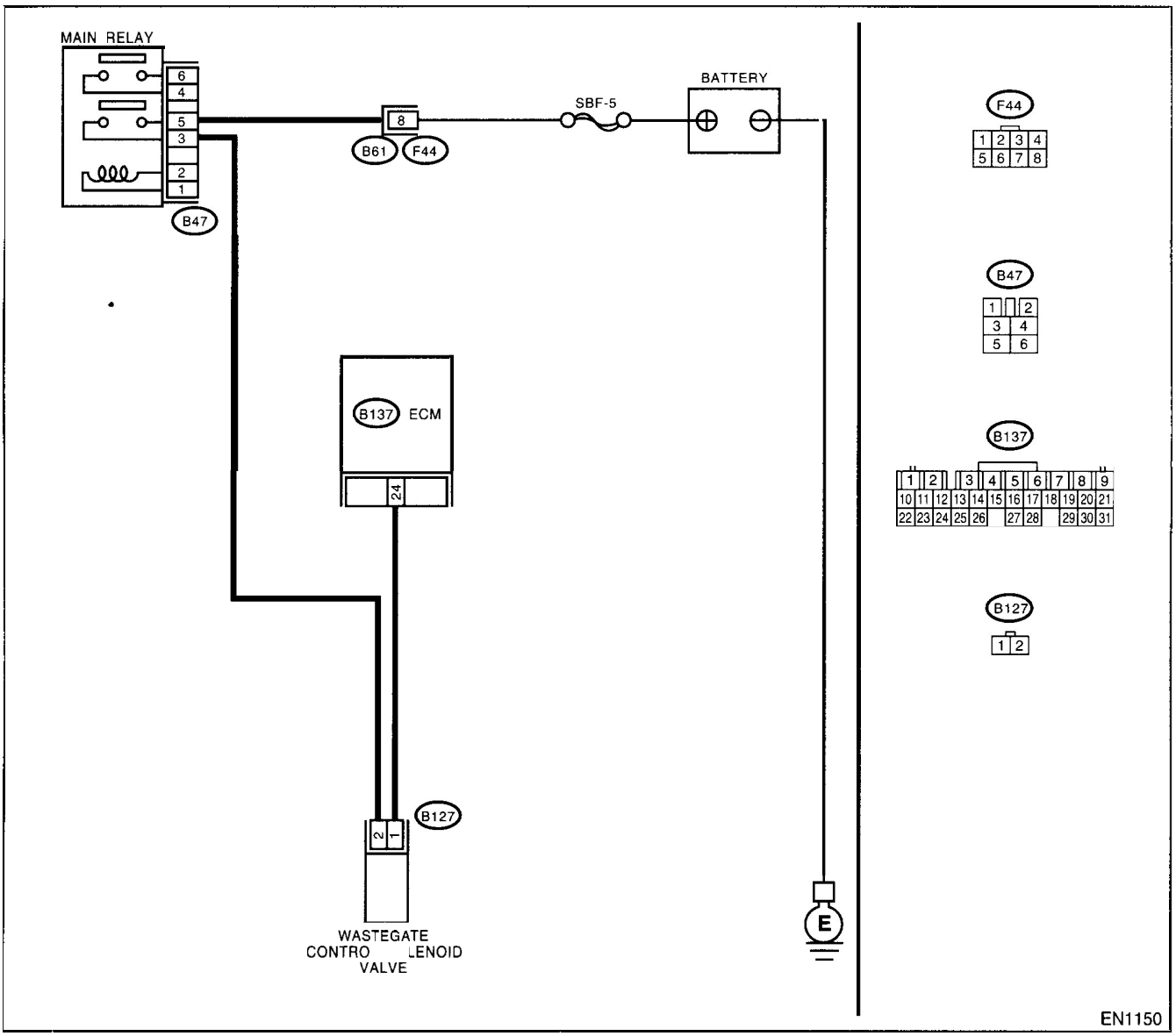

GETtheMANUALS.org

	Step	Check	Yes	No
1	**CHECK ANY OTHER DTC ON DISPLAY.**	Does the Subaru Select Monitor or OBD-II general scan tool indicate DTC P0244, P0245, P0246 or P1244?	Inspect DTC P0244, P0245, P0246 or P1244 using "List of Diagnostic Trouble Code (DTC)". <Ref. to EN(DOHC TURBO)-80, List of Diagnostic Trouble Code (DTC).> NOTE: In this case, it is not necessary to inspect DTC P1245.	Replace the wastegate control solenoid valve. <Ref. to FU(DOHC TURBO)-41, Wastegate Control Solenoid Valve.>

GETtheMANUALS.org

CU:DTC P1301 — FIRE DUE TO INCREASED EXHAUST TEMPERATURE —

- **DTC DETECTING CONDITION:**
  - Immediately at fault recognition
- **TROUBLE SYMPTOM:**
  - Erroneous idling
  - Engine stalls
  - Poor driving performance

CAUTION:
After repair or replacement of faulty parts, conduct Clear Memory Mode <Ref. to EN(DOHC TURBO)-49, OPERATION, Clear Memory Mode.> and Inspection Mode <Ref. to EN(DOHC TURBO)-46, Inspection Mode.>.

- **WIRING DIAGRAM:**

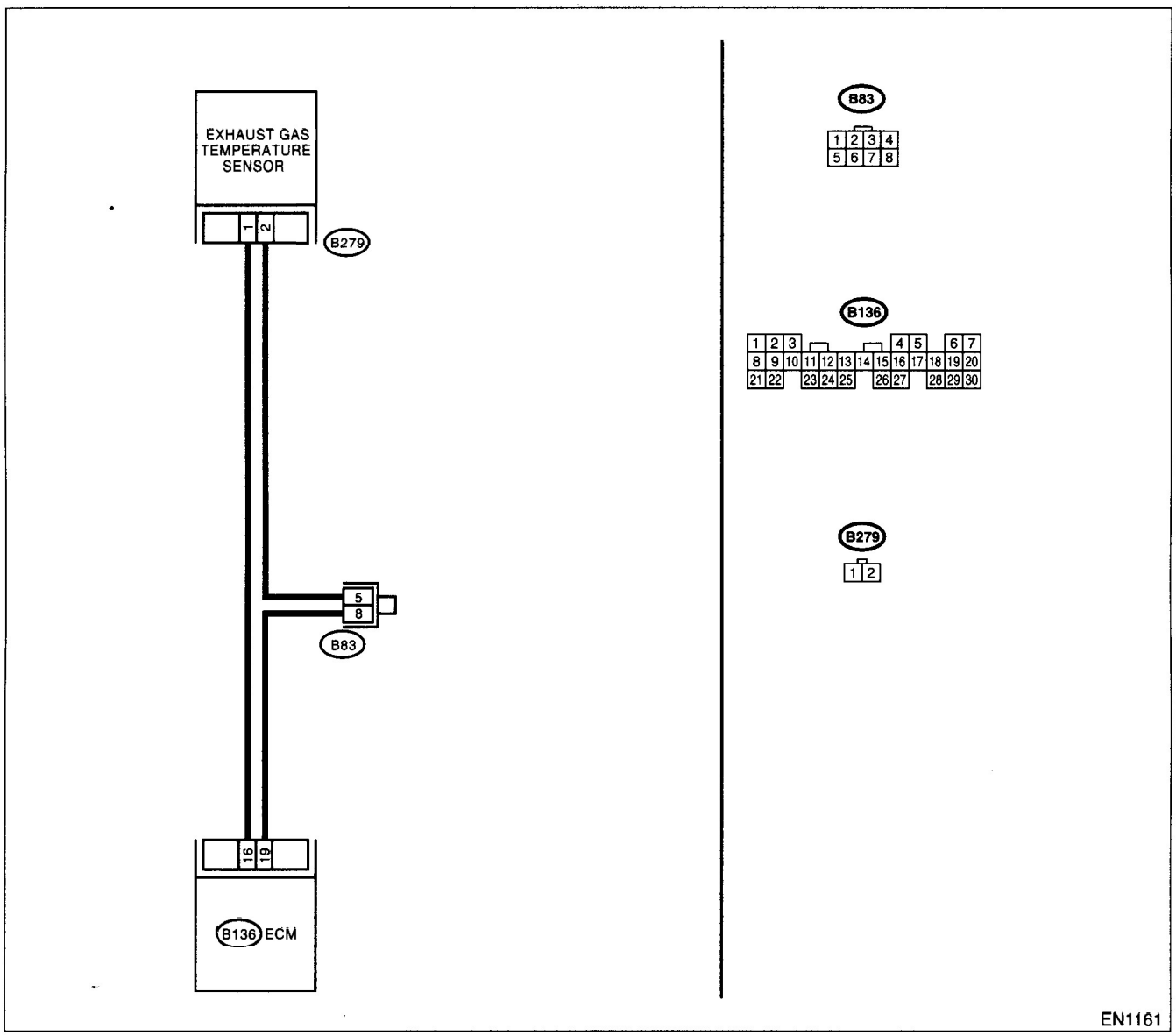

GETtheMANUALS.org

	Step	Check	Yes	No
1	**CHECK ANY OTHER DTC.** Conduct the troubleshooting for all DTC P0301, P0302, P0303 and P0304. <Ref. to EN(DOHC TURBO)-80, List of Diagnostic Trouble Code (DTC).>	Does failure for repair or replacement exist?	Repair or replace failure, then replace the precatalytic converter.	Contact with SOA (distributor) service. NOTE: Inspection by DTM is required, because probable cause is deterioration of multiple parts.

GETtheMANUALS.org

CV:DTC P1312 — EXHAUST GAS TEMPERATURE CIRCUIT MALFUNCTION —

- **DTC DETECTING CONDITION:**
  - Immediately at fault recognition

CAUTION:
After repair or replacement of faulty parts, conduct Clear Memory Mode <Ref. to EN(DOHC TURBO)-49, OPERATION, Clear Memory Mode.> and Inspection Mode <Ref. to EN(DOHC TURBO)-46, Inspection Mode.>.

- **WIRING DIAGRAM:**

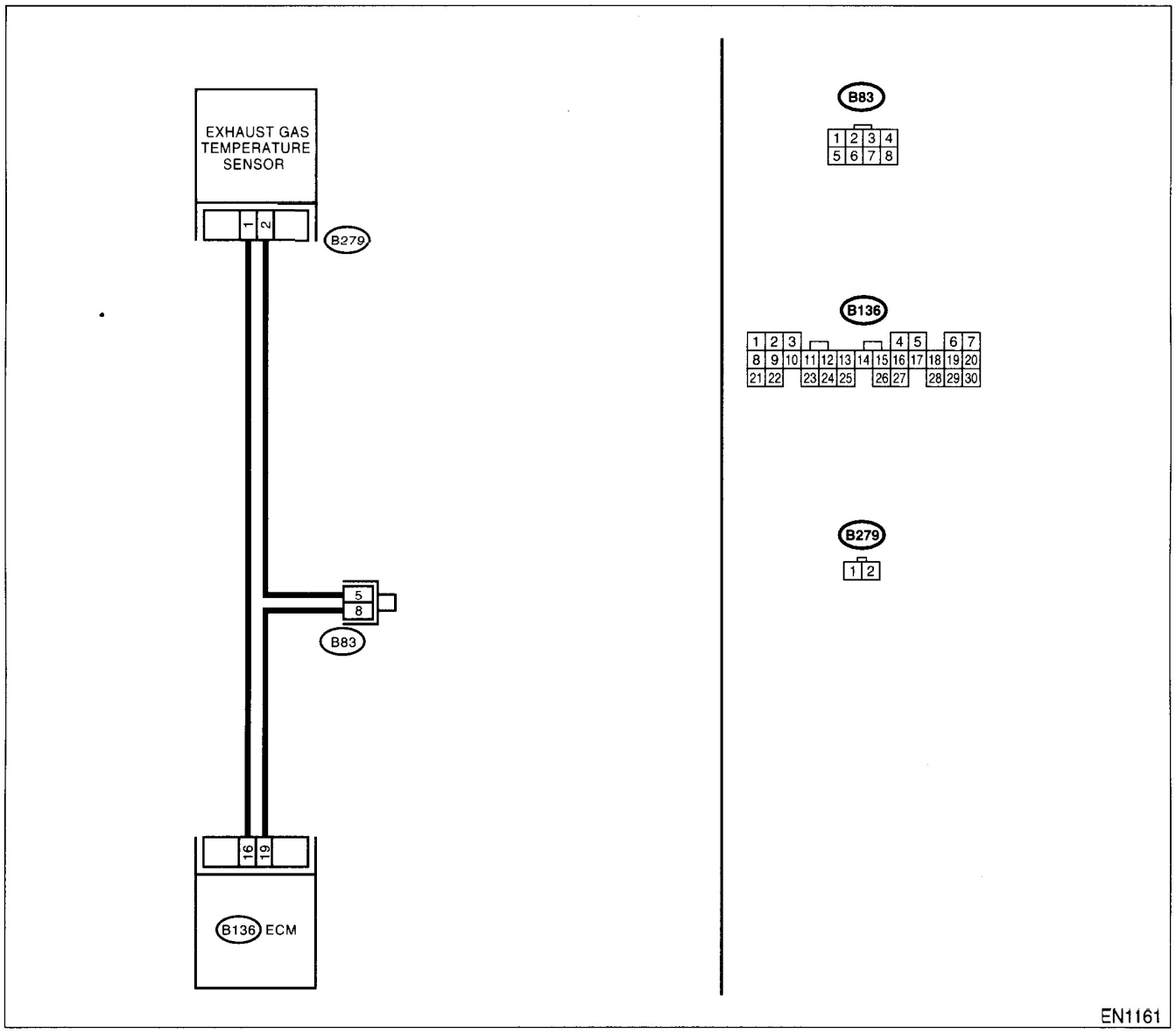

GETtheMANUALS.org

	Step	Check	Yes	No
1	**CHECK ANY OTHER DTC ON DISPLAY.**	Does the Subaru Select Monitor or OBD-II general scan tool indicate DTC P0545, P0546 or P1544?	Inspect DTC P0545, P0546 or P1544 using "List of Diagnostic Trouble Code (DTC)". <Ref. to EN(DOHC TURBO)-80, List of Diagnostic Trouble Code (DTC).> NOTE: In this case, it is not necessary to inspect DTC P1312.	Replace the exhaust gas temperature sensor. <Ref. to FU(DOHC TURBO)-46, Exhaust Temperature Sensor.>

GETtheMANUALS.org

CW:DTC P1400 — FUEL TANK PRESSURE CONTROL SOLENOID VALVE CIRCUIT LOW INPUT —

- **DTC DETECTING CONDITION:**
  - Two consecutive driving cycles with fault

CAUTION:
After repair or replacement of faulty parts, conduct Clear Memory Mode <Ref. to EN(DOHC TURBO)-49, OPERATION, Clear Memory Mode.> and Inspection Mode <Ref. to EN(DOHC TURBO)-46, Inspection Mode.>.

- **WIRING DIAGRAM:**

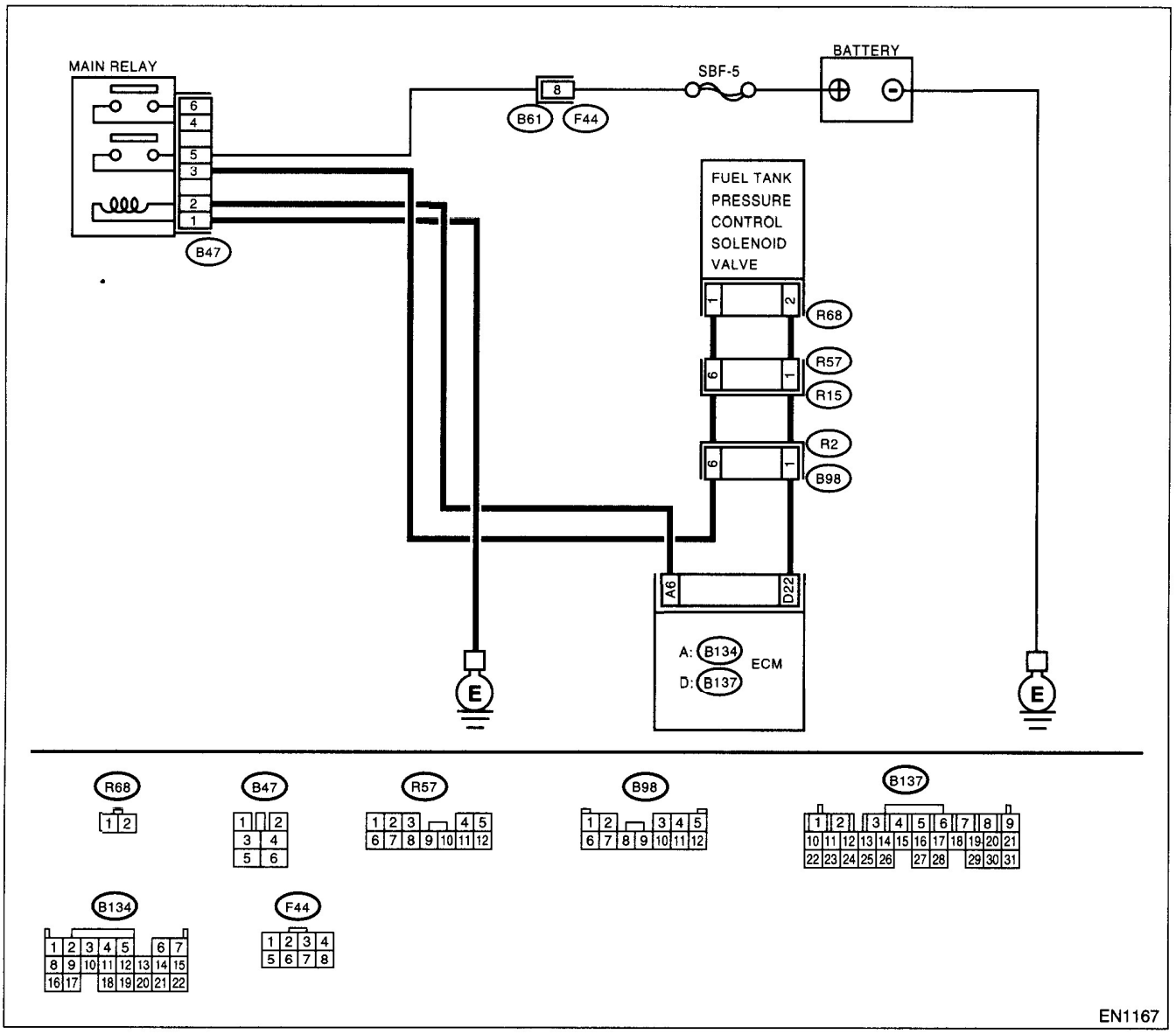

Step		Check	Yes	No
1	**CHECK OUTPUT SIGNAL FROM ECM.** 1)Turn the ignition switch to ON. 2)Measure the voltage between ECM and chassis ground. ***Connector & terminal*** ***(B137) No. 22 (+) — Chassis ground (–):***	Is the voltage more than 10 V?	Go to step **2.**	Go to step **3.**

GETtheMANUALS.org

Step	Check	Yes	No
CHECK POOR CONTACT. Check poor contact in ECM connector.	s there poor contact in ECM :onnector?	ɪepair poor con- ɜct in ECM con- ector.	Contact with SOA (distributor) service. NOTE: Inspection by DTM is required, because probable cause is deterioration of multiple parts.
CHECK HARNESS BETWEEN FUEL TANK PRESSURE CONTROL SOLENOID VALVE AND ECM CONNECTOR. 1)Turn the ignition switch to OFF. 2)Disconnect the connectors from fuel tank pressure control solenoid valve and ECM. 3)Measure the resistance of harness between fuel tank pressure control solenoid valve connector and chassis ground. ***Connector & terminal*** ***(R68) No. 2 — Chassis ground:***	s the resistance less than 10 Ω?	ɪepair ground hort circuit in har- ıess between :CM and fuel tank ıressure control olenoid valve onnector.	Go to step **4.**
CHECK HARNESS BETWEEN FUEL TANK PRESSURE CONTROL SOLENOID VALVE AND ECM CONNECTOR. Measure the resistance of harness between ECM and fuel tank pressure control solenoid valve connector. ***Connector & terminal*** ***(B137) No. 22 — (R68) No. 2:***	s the voltage less than 1 Ω?	ɜo to step **5.**	Repair harness and connector. NOTE: In this case, repai the following: • Open circuit in harness between ECM and fuel tank pressure control solenoid valve connector • Poor contact in coupling connectors
CHECK FUEL TANK PRESSURE CONTROL SOLENOID VALVE. Measure the resistance between fuel tank pressure control solenoid valve terminals. ***Terminals*** ***No. 1 — No. 2:***	s the resistance between 10 ɜnd 100 Ω?	ɜo to step **6.**	Replace the fuel tank pressure control solenoid valve. <Ref. to EC(DOHC TURBO)-12, Pressure Control Solenoid Valve.>
CHECK POWER SUPPLY TO FUEL TANK PRESSURE CONTROL SOLENOID VALVE. 1)Turn the ignition switch to ON. 2)Measure the voltage between fuel tank pres sure control solenoid valve and chassis ground. ***Connector & terminal*** ***(R68) No. 1 (+) — Chassis ground (–):***	s the voltage more than 10 V?	ɜo to step **7.**	Repair harness and connector. NOTE: In this case, repai the following: • Open circuit in harness between main relay and fuel tank pressure control solenoid valve connector • Poor contact in coupling connectors • Poor contact in main relay connec tor

GETTHEMANUALS.org

	Step	Check	Yes	No
7	**CHECK POOR CONTACT.** Check poor contact in fuel tank pressure control solenoid valve connector.	Is there poor contact in fuel tank pressure control solenoid valve connector?	Repair poor contact in fuel tank pressure control solenoid valve connector.	Contact with SOA (distributor) service. NOTE: Inspection by DTM is required, because probable cause is deterioration of multiple parts.

GETtheMANUALS.org

GETtheMANUALS.org

CX:DTC P1420 — FUEL TANK PRESSURE CONTROL SOLENOID VALVE CIRCUIT HIGH INPUT —

- **DTC DETECTING CONDITION:**
  - Two consecutive driving cycles with fault

CAUTION:
After repair or replacement of faulty parts, conduct Clear Memory Mode <Ref. to EN(DOHC TURBO)-49, OPERATION, Clear Memory Mode.> and Inspection Mode <Ref. to EN(DOHC TURBO)-46, Inspection Mode.>.

- **WIRING DIAGRAM:**

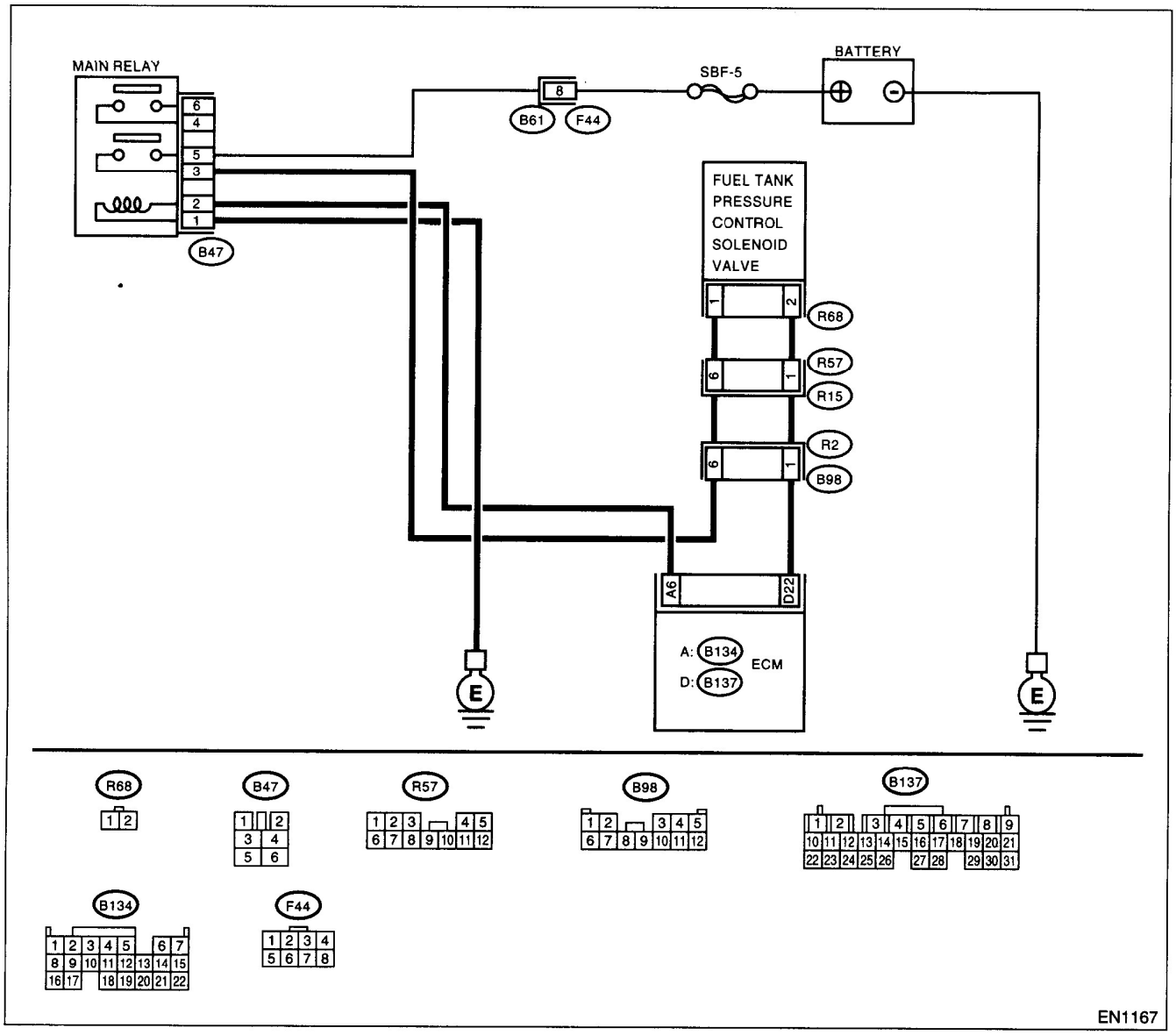

GETtheMANUALS.org

	Step	Check	Yes	No
1	**CHECK OUTPUT SIGNAL FROM ECM.** 1)Turn the ignition switch to OFF. 2)Connect the test mode connector at the lower portion of instrument panel (on the driver's side), to the side of the center console box. 3)Turn the ignition switch to ON. 4)While operating the fuel tank pressure control solenoid valve, measure voltage between ECM and chassis ground. NOTE: Fuel tank pressure control solenoid valve operation can be executed using Subaru Select Monitor. For procedure, refer to "Compulsory Valve Operation Check Mode". <Ref. to EN(DOHC TURBO)-50, Compulsory Valve Operation Check Mode.> ***Connector & terminal*** ***(B137) No. 22 (+) — Chassis ground (–):***	Does voltage change between 0 and 10 V?	Go to step **2.**	Even if MIL lights up, the circuit has returned to a normal condition at this time. In this case, repair poor contact in ECM connector.
2	**CHECK OUTPUT SIGNAL FROM ECM.** 1)Turn the ignition switch to ON. 2)Measure the voltage between ECM and chassis ground. ***Connector & terminal*** ***(B137) No. 22 (+) — Chassis ground (–):***	Is the voltage more than 10 V?	Go to step **4.**	Go to step **3.**
3	**CHECK POOR CONTACT.** Check poor contact in ECM connector.	Is there poor contact in ECM connector?	Repair poor contact in ECM connector.	Replace the ECM. <Ref. to FU(DOHC TURBO)-47, Engine Control Module.>
4	**CHECK HARNESS BETWEEN FUEL TANK PRESSURE CONTROL SOLENOID VALVE AND ECM CONNECTOR.** 1)Turn the ignition switch to OFF. 2)Disconnect the connector from fuel tank pressure control solenoid valve. 3)Turn the ignition switch to ON. 4)Measure the voltage between ECM and chassis ground. ***Connector & terminal*** ***(B137) No. 22 (+) — Chassis ground (–):***	Is the voltage more than 10 V?	Repair battery short circuit in harness between ECM and fuel tank pressure control solenoid valve connector. After repair, replace the ECM. <Ref. to FU(DOHC TURBO)-47, Engine Control Module.>	Go to step **5.**
5	**CHECK FUEL TANK PRESSURE CONTROL SOLENOID VALVE.** 1)Turn the ignition switch to OFF. 2)Measure the resistance between fuel tank pressure control solenoid valve terminals. ***Terminals*** ***No. 1 — No. 2:***	Is the resistance less than 1 Ω?	Replace the fuel tank pressure control solenoid valve <Ref. to EC(DOHC TURBO)-12, Pressure Control Solenoid Valve.> and ECM <Ref. to FU(DOHC TURBO)-47, Engine Control Module.>	Go to step **6.**
6	**CHECK POOR CONTACT.** Check poor contact in ECM connector.	Is there poor contact in ECM connector?	Repair poor contact in ECM connector.	Replace the ECM. <Ref. to FU(DOHC TURBO)-47, Engine Control Module.>

GETtheMANUALS.org

CY:DTC P1443 — EVAPORATIVE EMISSION CONTROL SYSTEM VENT CONTROL FUNCTION PROBLEM —

- **DTC DETECTING CONDITION:**
  - Immediately after fault occurrence
- **TROUBLE SYMPTOM:**
  - Improper fuel supply

CAUTION:
After repair or replacement of faulty parts, conduct Clear Memory Mode <Ref. to EN(DOHC TURBO)-49, OPERATION, Clear Memory Mode.> and Inspection Mode <Ref. to EN(DOHC TURBO)-46, Inspection Mode.>.

- **WIRING DIAGRAM:**

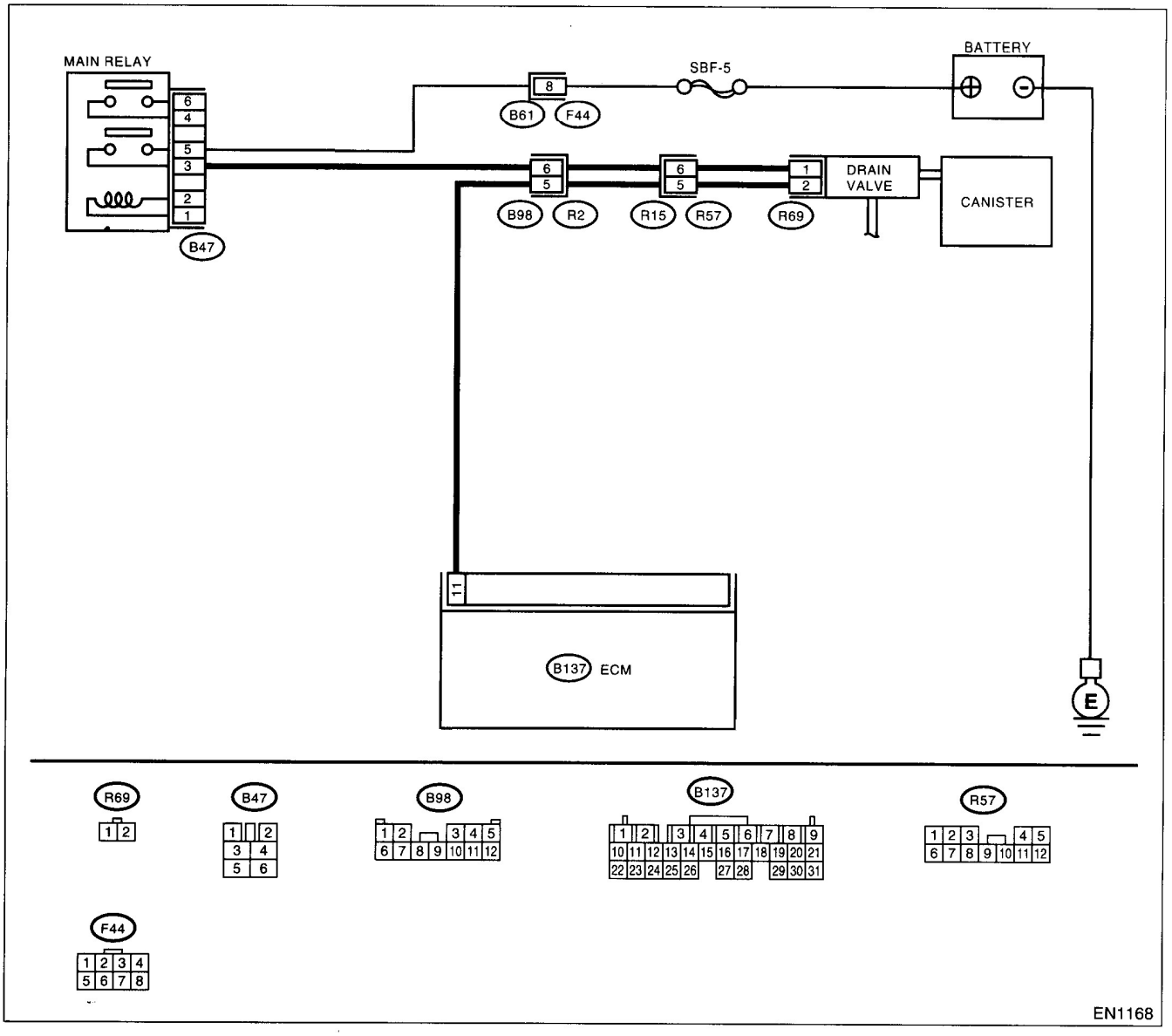

GETtheMANUALS.org

	Step	Check	Yes	No
1	**CHECK ANY OTHER DTC ON DISPLAY.**	Is there any other DTC on display?	Inspect the relevant DTC using "List of Diagnostic Trouble Code (DTC)". <Ref. to EN(DOHC TURBO)-80, List of Diagnostic Trouble Code (DTC).>	Go to step **2.**
2	**CHECK VENT LINE HOSES.** Check the following items. •Clogging of vent hoses between canister and drain valve •Clogging of vent hose between drain valve and air filter •Clogging of drain filter	Is there a fault in vent line?	Repair or replace the faulty part.	Go to step **3.**
3	**CHECK DRAIN VALVE OPERATION.** 1)Turn the ignition switch to OFF. 2)Connect the test mode connector at the lower portion of instrument panel (on the driver's side), to the side of the center console box. 3)Turn the ignition switch to ON. 4)Operate the drain valve. NOTE: Drain valve operation can also be executed using Subaru Select Monitor. For the procedure, refer to the "Compulsory Valve Operation Check Mode". <Ref. to EN(DOHC TURBO)-50, Compulsory Valve Operation Check Mode.>	Does the drain valve produce operating sound?	Contact with SOA (distributor) service. NOTE: Inspection by DTM is required, because probable cause is deterioration of multiple parts.	Replace the drain valve. <Ref. to EC(DOHC TURBO)-17, Drain Valve.>

GETtheMANUALS.org

GETtheMANUALS.org

CZ:DTC P1480 — COOLING FAN RELAY 1 CIRCUIT HIGH INPUT —

- **DTC DETECTING CONDITION:**
  - Two consecutive driving cycles with fault
- **TROUBLE SYMPTOM:**
  - Radiator fan does not operate properly.
  - Overheating

CAUTION:
After repair or replacement of faulty parts, conduct Clear Memory Mode <Ref. to EN(DOHC TURBO)-49, Operation.> and Inspection Mode <Ref. to EN(DOHC TURBO)-46, Inspection Mode.>.

GETtheMANUALS.org

- **WIRING DIAGRAM:**

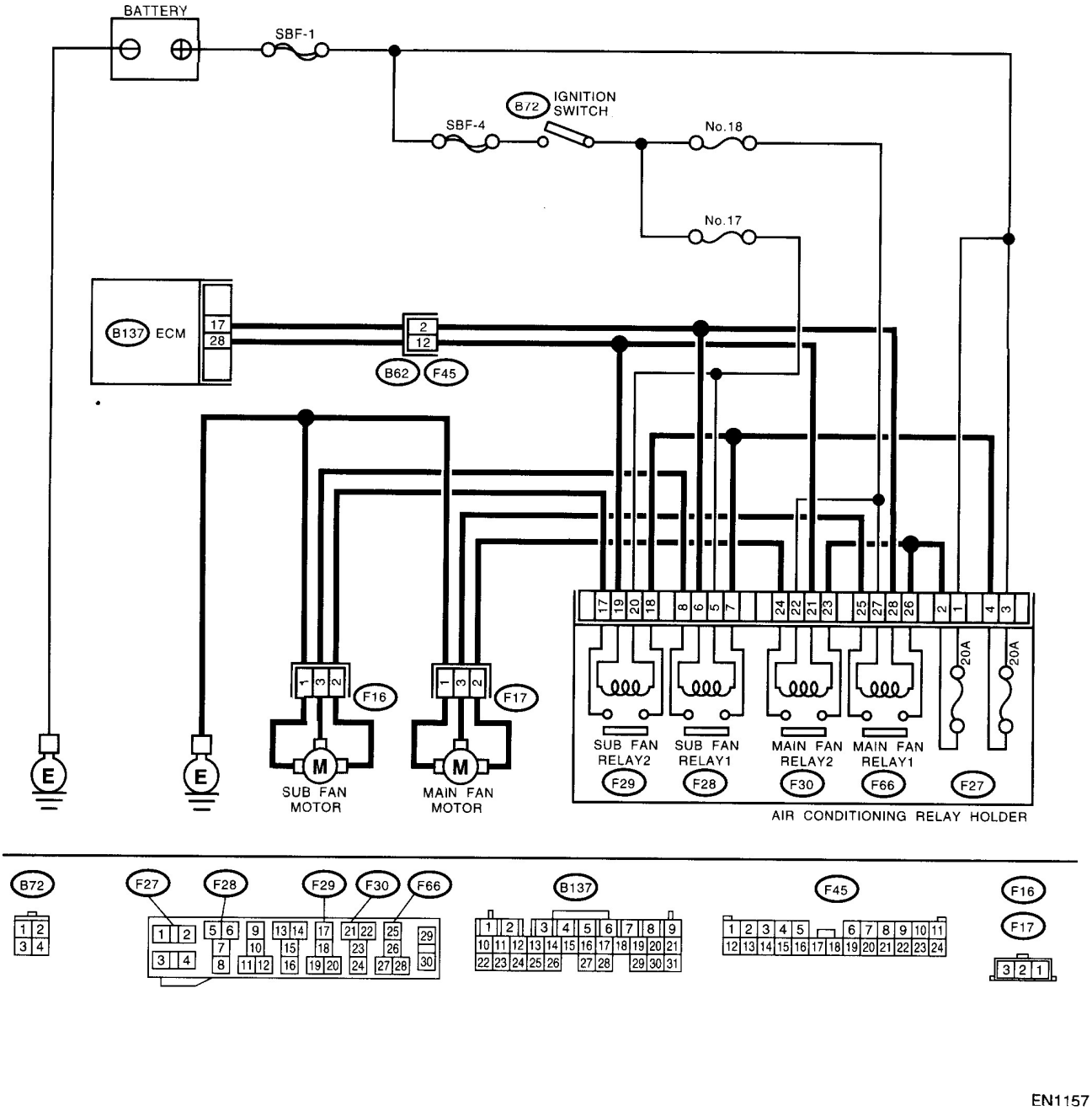

EN1157

GETtheMANUALS.org

	Step	Check	Yes	No
1	**CHECK OUTPUT SIGNAL FROM ECM.** 1)Turn the ignition switch to OFF. 2)Connect the test mode connector at the lower portion of instrument panel (on the driver's side), to the side of the center console box. 3)Turn the ignition switch to ON. 4)While operating the radiator fan relay, measure voltage between ECM and chassis ground. NOTE: Radiator fan relay operation can be executed using Subaru Select Monitor. For procedure, refer to "Compulsory Valve Operation Check Mode".<Ref. to EN(DOHC TURBO)-50, Compulsory Valve Operation Check Mode.> ***Connector & terminal*** ***(B137) No. 17 (+) — Chassis ground (–):*** ***(B137) No. 28 (+) — Chassis ground (–):***	Does the voltage change between 0 and 10 V?	Even if MIL lights up, the circuit has returned to a normal condition at this time. In this case, repair poor contact in ECM connector.	Go to step **2.**
2	**CHECK SHORT CIRCUIT IN RADIATOR FAN RELAY CONTROL CIRCUIT.** 1)Turn the ignition switch to OFF. 2)Remove the main fan relay and sub fan relay. (with A/C models) 3)Disconnect the test mode connector. 4)Turn the ignition switch to ON. 5)Measure the voltage between ECM and chassis ground. ***Connector & terminal*** ***(B137) No. 17 (+) — Chassis ground (–):*** ***(B137) No. 28 (+) — Chassis ground (–):***	Is the voltage more than 10 V?	Repair battery short circuit in radiator fan relay control circuit. After repair, replace the ECM. <Ref. to FU(DOHC TURBO)-47, Engine Control Module.>	Go to step **3.**
3	**CHECK MAIN FAN RELAY.** 1)Turn the ignition switch to OFF. 2)Remove the main fan relay 1 and 2. 3)Measure the resistance between main fan relay terminals. ***Terminal*** ***No. 25 — No. 26 (Main fan relay 1)*** ***No. 23 — No. 24 (Main fan relay 2)***	Is the resistance less than 1 Ω?	Replace the main fan relay and ECM. <Ref. to FU(DOHC TURBO)-47, Engine Control Module.>	Go to step **4.**
4	**CHECK SUB FAN RELAY.** 1)Remove the sub fan relay. 2)Measure the resistance between sub fan relay terminals. ***Terminal*** ***No. 7 — No. 8 (Sub fan relay 1)*** ***No. 17 — No. 18 (Sub fan relay 2)***	Is the resistance less than 1 Ω?	Replace the sub fan relay and ECM. <Ref. to FU(DOHC TURBO)-47, Engine Control Module.>	Go to step **5.**
5	**CHECK POOR CONTACT.** Check poor contact in ECM connector.	Is there poor contact in ECM connector?	Repair poor contact in ECM connector.	Replace the ECM. <Ref. to FU(DOHC TURBO)-47, Engine Control Module.>

GETtheMANUALS.org

DA:DTC P1507 — IDLE CONTROL SYSTEM MALFUNCTION (FAIL-SAFE) —

- **DTC DETECTING CONDITION:**
  - Immediately at fault recognition
- **TROUBLE SYMPTOM:**
  - Engine keeps running at higher revolution than specified idling revolution.
  - Fuel is cut according to fail-safe function.

CAUTION:
After repair or replacement of faulty parts, conduct Clear Memory Mode <Ref. to EN(DOHC TURBO)-49, OPERATION, Clear Memory Mode.> and Inspection Mode <Ref. to EN(DOHC TURBO)-46, Inspection Mode.>.

- **WIRING DIAGRAM:**

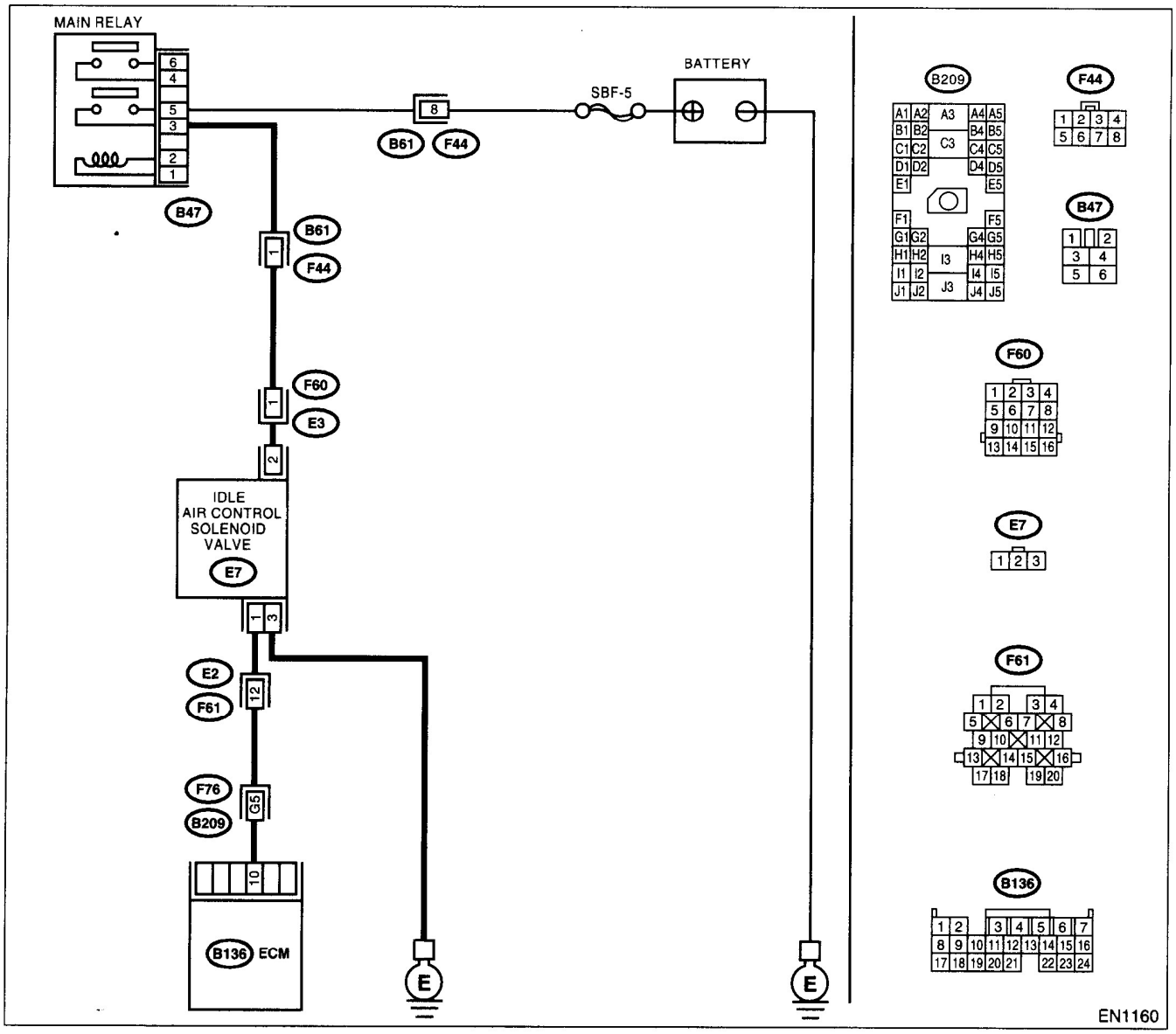

GETtheMANUALS.org

Step	Check	Yes	No
CHECK ANY OTHER DTC ON DISPLAY.	Does the Subaru Select Monitor or OBD-II general scan tool indicate DTC P0506, P0507, P0508, P0509 or P1142?	Inspect DTC P0506, P0507, P0508, P0509 or P1142 using "List of Diagnostic Trouble Code (DTC)". <Ref. to EN(DOHC TURBO)-80, List of Diagnostic Trouble Code (DTC).> NOTE: In this case, it is not necessary to inspect DTC P1507.	Go to step **2.**
CHECK AIR INTAKE SYSTEM. 1)Turn the ignition switch to ON. 2)Start the engine, and idle it. 3)Check the following items. •Loose installation of intake manifold, idle air control solenoid valve and throttle body •Cracks of intake manifold gasket, idle air control solenoid valve gasket and throttle body gasket •Disconnections of vacuum hoses	Is there a fault in air intake system?	Repair air suction and leaks.	Go to step **3.**
CHECK THROTTLE CABLE.	Does the throttle cable have play for adjustment?	Go to step **4.**	Adjust throttle cable. <Ref. to SP-7, INSTALLATION, Accelerator Control Cable.>
CHECK AIR BY-PASS LINE. 1)Turn the ignition switch to OFF. 2)Remove the idle air control solenoid valve from throttle body. <Ref. to FU(DOHC TURBO)-36, Idle Air Control Solenoid Valve.> 3)Confirm that there are no foreign particles in by-pass air line.	Are foreign particles in by-pass air line?	Remove foreign particles from by-pass air line.	Replace the idle air control solenoid valve. <Ref. to FU(DOHC TURBO)-36, Idle Air Control Solenoid Valve.>

GETtheMANUALS.org

GETtheMANUALS.org

DB:DTC P1518 — STARTER SWITCH CIRCUIT LOW INPUT —

- **DTC DETECTING CONDITION:**
  - Two consecutive driving cycles with fault
- **TROUBLE SYMPTOM:**
  - Failure of engine to start

CAUTION:
After repair or replacement of faulty parts, conduct Clear Memory Mode <Ref. to EN(DOHC TURBO)-49, OPERATION, Clear Memory Mode.> and Inspection Mode <Ref. to EN(DOHC TURBO)-46, Inspection Mode.>.

GETtheMANUALS.org

- **WIRING DIAGRAM:**

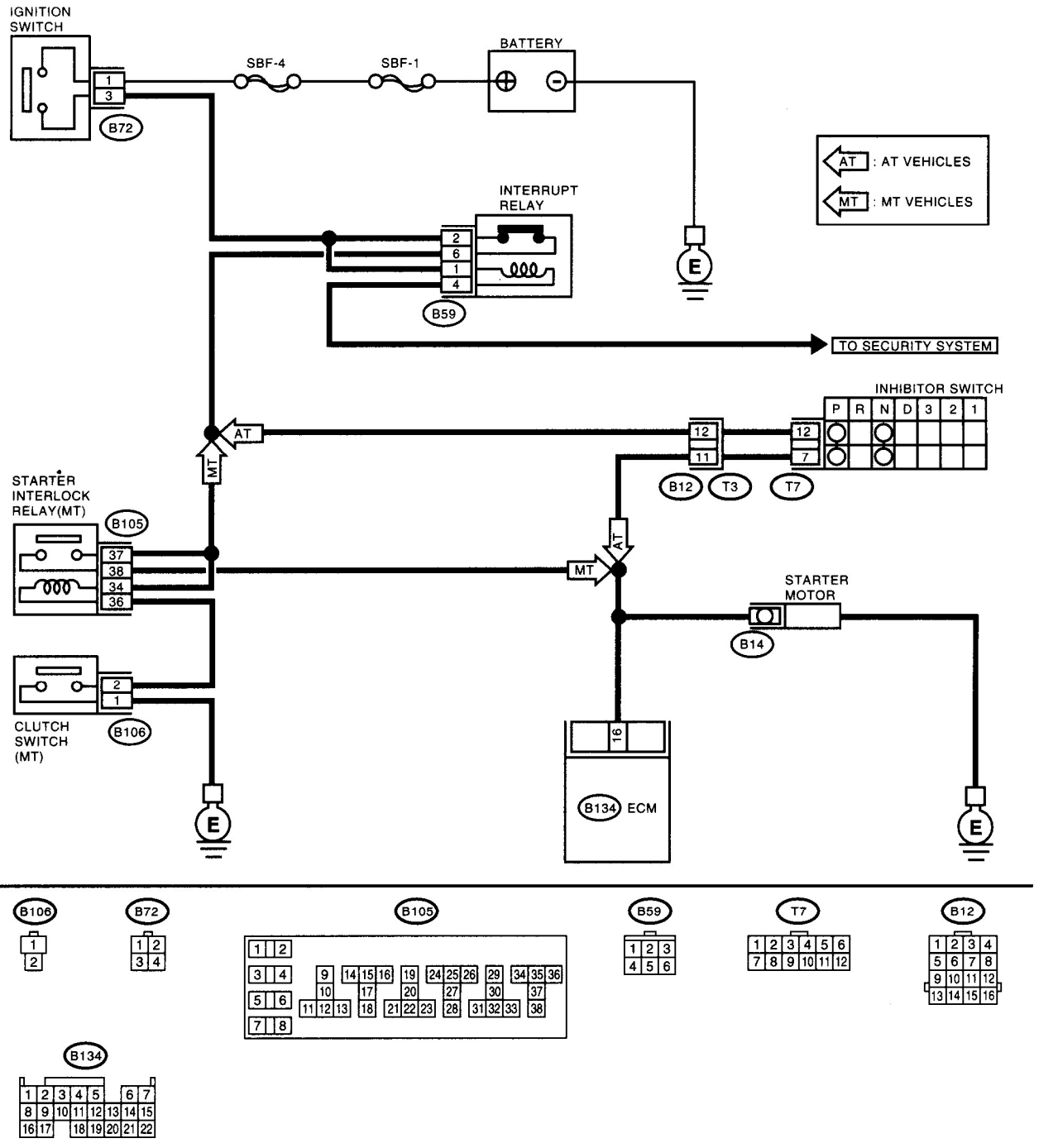

EN1139

GETtheMANUALS.org

Step		Check	Yes	No
1	CHECK OPERATION OF STARTER MOTOR.	Does the starter motor operate when ignition switch to "ST"?	Repair harness and connector. NOTE: In this case, repair the following: • Open or ground short circuit in harness between ECM and starter motor connector. • Poor contact in ECM connector.	Check starter motor circuit. <Ref. to EN(DOHC TURBO)-64, STARTER MOTOR CIRCUIT, Diagnostics for Engine Starting Failure.>

GETtheMANUALS.org

DC:DTC P1544 — HIGH EXHAUST TEMPERATURE DETECTED —

- **DTC DETECTING CONDITION:**
  - Immediately at fault recognition
- **TROUBLE SYMPTOM:**
  - Erroneous idling
  - Poor driving performance

CAUTION:
After repair or replacement of faulty parts, conduct Clear Memory Mode <Ref. to EN(DOHC TURBO)-49, OPERATION, Clear Memory Mode.> and Inspection Mode <Ref. to EN(DOHC TURBO)-46, Inspection Mode.>.

- **WIRING DIAGRAM:**

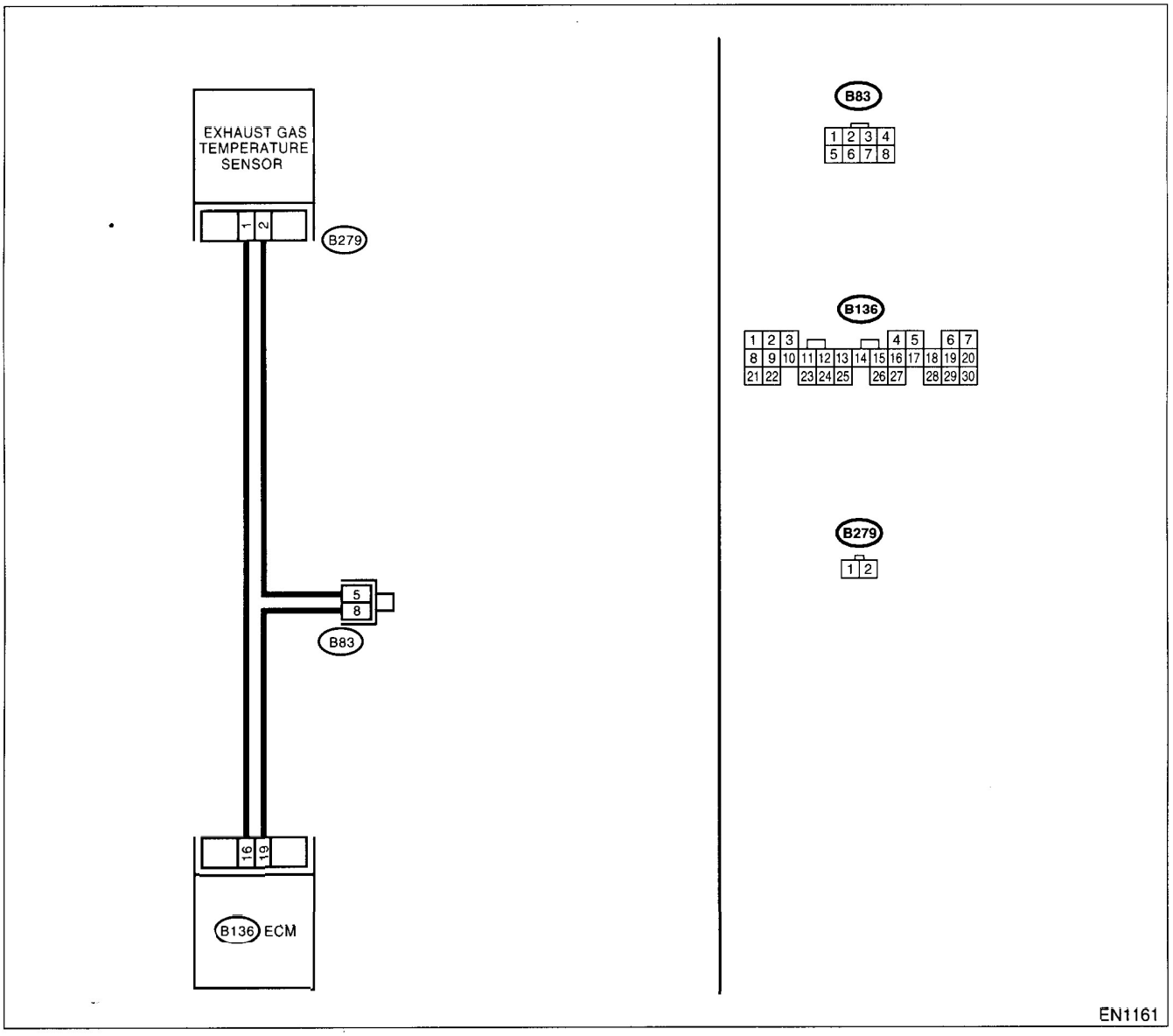

GETtheMANUALS.org

Step		Check	Yes	No
1	**CHECK ANY OTHER DTC ON DISPLAY.**	Does the Subaru Select Monitor or OBD-II general scan tool indicate DTC P0335, P0336, P0340, P0341, P0545, P0546, P1312, P0102, P0103, P0101, P1141, P0301, P0302, P0303, P0304, P1301, P0171, P0133, P1134, P0131, P0132, P1130, P1131, P1139, P0031, P0032, P0139, P0136, P0039 or P0037?	Inspect DTC P0335, P0336, P0340, P0341, P0545, P0546, P1312, P0102, P0103, P0101, P1141, P0301, P0302, P0303, P0304, P1301, P0171, P0133, P1134, P0131, P0132, P1130, P1131, P1139, P0031, P0032, P0139, P0136, P0039 or P0037 using List of Diagnostic Trouble Code (DTC). <Ref. to EN(DOHC TURBO)-80, List of Diagnostic Trouble Code (DTC).> NOTE: In this case, it is not necessary to inspect DTC P1544.	Go to step **2.**
2	**CHECK EXHAUST SYSTEM.** Check exhaust system parts. NOTE: Check the following items. •Loose installation of exhaust manifold •Cracks or hole of exhaust manifold •Loose installation of front oxygen (A/F) sensor	Is there a fault in exhaust system?	Repair or replace failure, then replace the precatalytic converter.	Contact with SOA (distributor) service. NOTE: Inspection by DTM is required, because probable cause is deterioration of multiple parts.

GETtheMANUALS.org

GETtheMANUALS.org

DD:DTC P1560 — BACK-UP VOLTAGE CIRCUIT MALFUNCTION —

- **DTC DETECTING CONDITION:**
  - Immediately at fault recognition

CAUTION:
After repair or replacement of faulty parts, conduct Clear Memory Mode <Ref. to EN(DOHC TURBO)-49, OPERATION, Clear Memory Mode.> and Inspection Mode <Ref. to EN(DOHC TURBO)-46, Inspection Mode.>.

GETtheMANUALS.org

DIAGNOSTIC PROCEDURE WITH DIAGNOSTIC TROUBLE CODE (DTC)

- **WIRING DIAGRAM:**

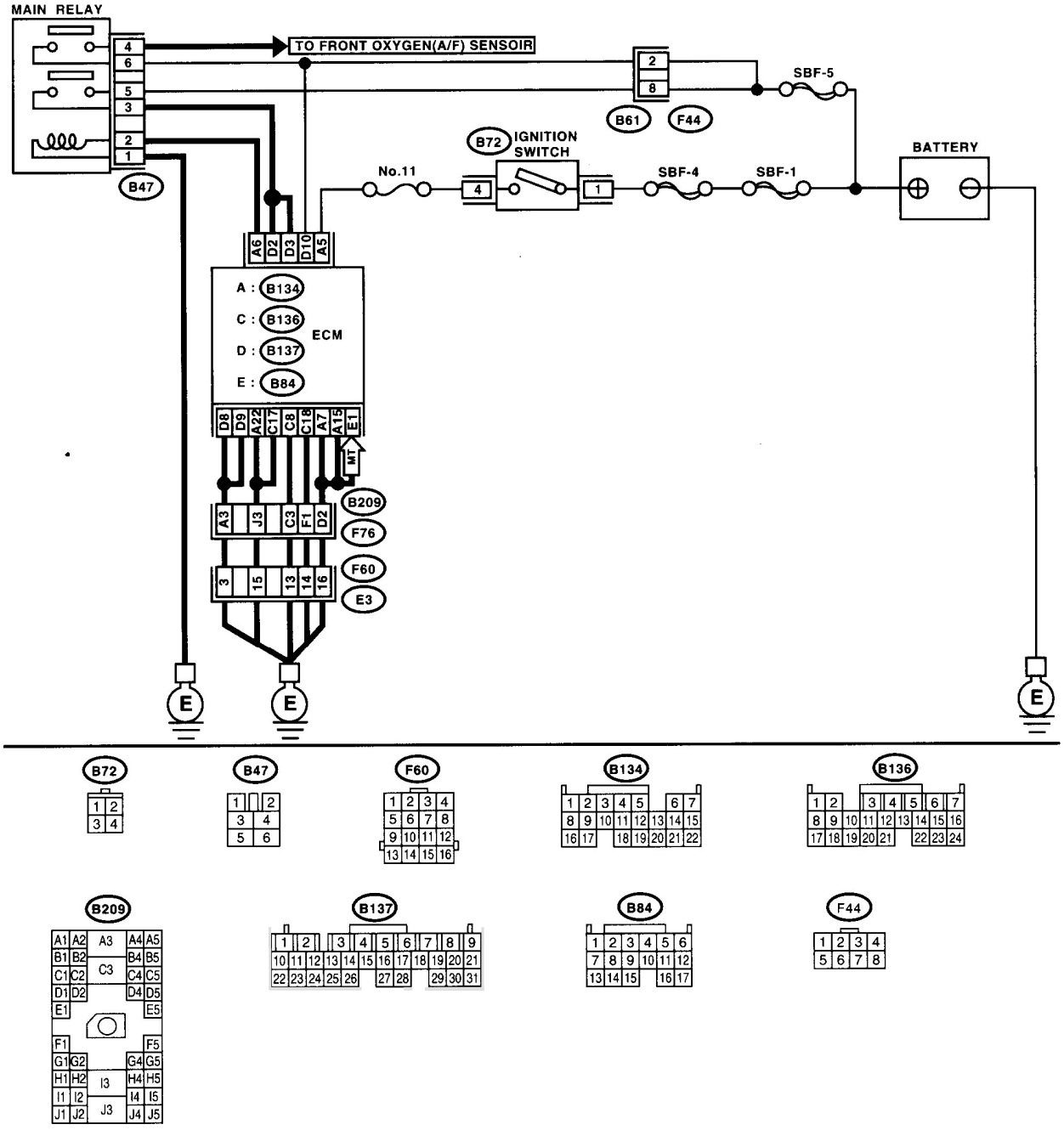

EN1171

	Step	Check	Yes	No
1	**CHECK INPUT SIGNAL FOR ECM.** 1)Turn the ignition switch to OFF. 2)Measure the voltage between ECM and chassis ground. ***Connector & terminal*** ***(B137) No. 10 (+) — Chassis ground (–):***	Is the voltage more than 10 V?	Repair poor contact in ECM connector.	Go to step **2.**

GET theMANUALS.org

	Step	Check	Yes	No
2	**CHECK HARNESS BETWEEN ECM AND MAIN FUSE BOX CONNECTOR.** 1)Disconnect the connector from ECM. 2)Measure the resistance of harness between ECM and chassis ground. ***Connector & terminal*** ***(B137) No. 10 — Chassis ground:***	Is the resistance less than 10 Ω?	Repair ground short circuit in harness between ECM connector and battery terminal.	Go to step **3.**
3	**CHECK FUSE SBF-5.**	Is fuse blown?	Replace the fuse.	Repair harness and connector. NOTE: In this case, repair the following: • Open circuit in harness between ECM and battery • Poor contact in ECM connector • Poor contact in battery terminal

GETtheMANUALS.org

DE:DTC P1590 — NEUTRAL POSITION SWITCH CIRCUIT HIGH INPUT —

- **DTC DETECTING CONDITION:**
  - Two consecutive driving cycles with fault
- **TROUBLE SYMPTOM:**
  - Erroneous idling

CAUTION:
After repair or replacement of faulty parts, conduct Clear Memory Mode <Ref. to EN(DOHC TURBO)-49, OPERATION, Clear Memory Mode.> and Inspection Mode <Ref. to EN(DOHC TURBO)-46, Inspection Mode.>.

- **WIRING DIAGRAM:**

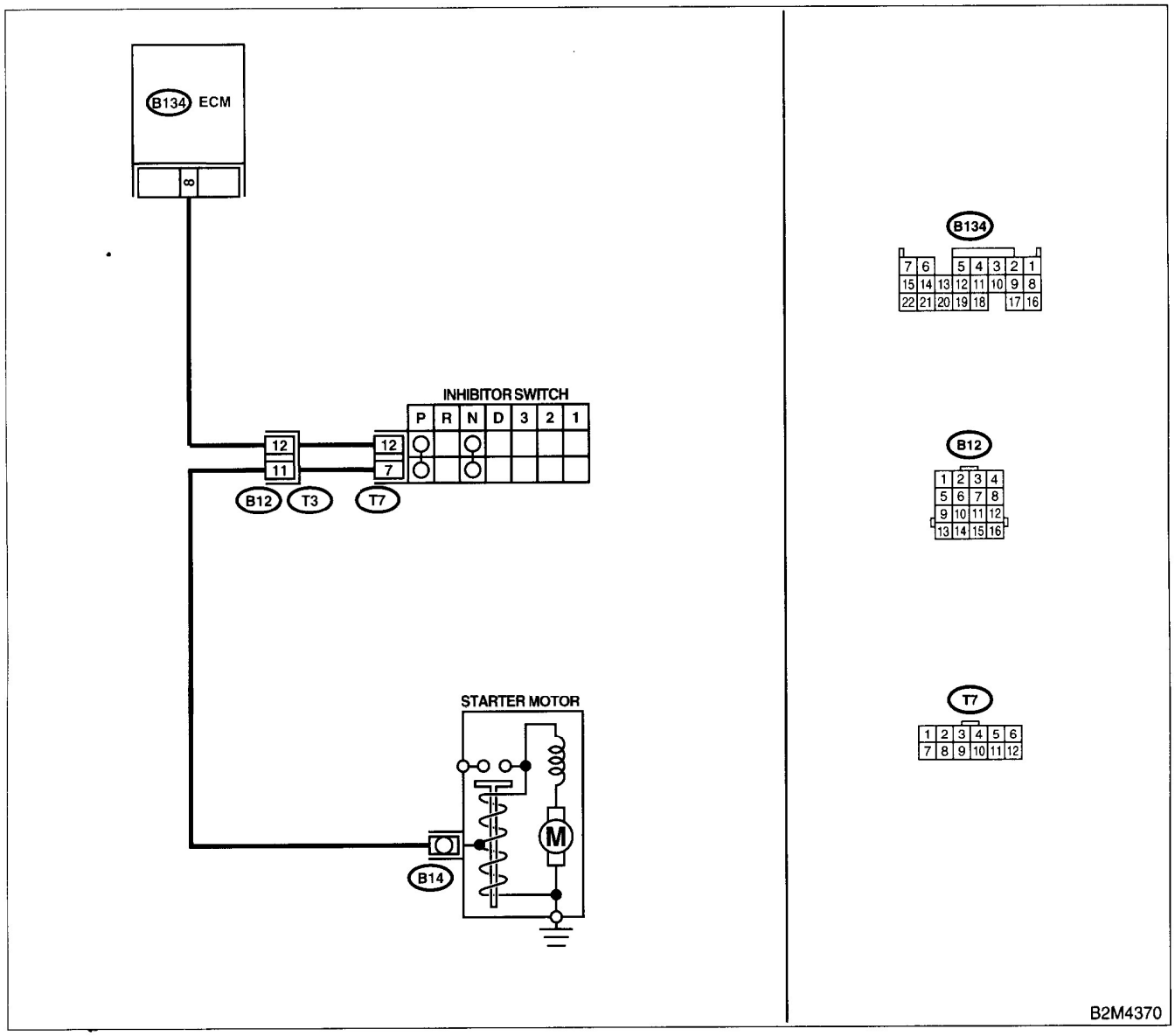

GETtheMANUALS.org

	Step	Check	Yes	No
1	**CHECK DTC P0705 ON DISPLAY.**	Does the Subaru Select Monitor or OBD-II general scan tool indicate DTC P0705?	Inspect DTC P0705 using "List of Diagnostic Trouble Code (DTC)". <Ref. to EN(DOHC TURBO)-80, List of Diagnostic Trouble Code (DTC).>	Go to step **2.**
2	**CHECK INPUT SIGNAL FOR ECM.** 1)Turn the ignition switch to ON. 2)Measure the voltage between ECM and chassis ground in selector lever "N" and "P" positions. ***Connector & terminal*** ***(B134) No. 8 (+) — Chassis ground (–):***	Is the voltage less than 1 V?	Go to step **3.**	Go to step **5.**
3	**CHECK INPUT SIGNAL FOR ECM.** Measure the voltage between ECM and chassis ground in selector lever except for "N" and "P" positions. ***Connector & terminal*** ***(B134) No. 8 (+) — Chassis ground (–):***	Is the voltage between 4.5 and 5.5 V?	Go to step **4.**	Go to step **5.**
4	**CHECK POOR CONTACT.** Check poor contact in ECM connector.	Is there poor contact in ECM connector?	Repair poor contact in ECM connector.	Contact with SOA (distributor) service. NOTE: Inspection by DTM is required, because probable cause is deterioration of multiple parts.
5	**CHECK INPUT SIGNAL FOR ECM.** Measure the voltage between ECM and chassis ground. ***Connector & terminal*** ***(B134) No. 8 (+) — Chassis ground (–):***	Is the voltage more than 10 V?	Repair battery short circuit in harness between ECM and inhibitor switch connector.	Go to step **6.**
6	**CHECK HARNESS BETWEEN ECM AND INHIBITOR SWITCH CONNECTOR.** 1)Turn the ignition switch to OFF. 2)Disconnect the connectors from ECM and inhibitor switch. 3)Measure the resistance of harness between ECM and inhibitor switch connector. ***Connector & terminal*** ***(B134) No. 8 — (T7) No. 12:***	Is the resistance less than 1 Ω?	Go to step **7.**	Repair harness and connector. NOTE: In this case, repair the following: • Open circuit in harness between ECM and inhibitor switch connector • Poor contact in coupling connector • Poor contact in inhibitor switch connector • Poor contact in ECM connector

GETtheMANUALS.org

	Step	Check	Yes	No
7	**CHECK INHIBITOR SWITCH GROUND LINE.** Measure the resistance of harness between inhibitor switch connector and engine ground. ***Connector & terminal*** ***(T7) No. 7 — Engine ground:***	Is the resistance less than 5 Ω?	Go to step **8.**	Repair open circuit in harness between inhibitor switch connector and starter motor ground line. NOTE: In this case, repair the following: • Open circuit in harness between inhibitor switch connector and starter motor ground line • Poor contact in starter motor connector • Poor contact in starter motor ground • Starter motor
8	**CHECK INHIBITOR SWITCH.** Measure the resistance between inhibitor switch connector receptacle's terminals in selector lever "N" and "P" positions. ***Terminals*** ***No. 7 — No. 12:***	Is the resistance less than 1 Ω?	Go to step **9.**	Replace the inhibitor switch. <Ref. to AT-28, Inhibitor Switch.>
9	**CHECK SELECTOR CABLE CONNECTION.**	Is there any fault in selector cable connection to inhibitor switch?	Repair selector cable connection. <Ref. to CS-27, INSPECTION, Select Cable.>	Contact with SOA (distributor) service. NOTE: Inspection by DTM is required, because probable cause is deterioration of multiple parts.

GETtheMANUALS.org

GETtheMANUALS.org

DF:DTC P1591 — NEUTRAL POSITION SWITCH CIRCUIT LOW INPUT —

- **DTC DETECTING CONDITION:**
  - Two consecutive driving cycles with fault
- **TROUBLE SYMPTOM:**
  - Erroneous idling

CAUTION:
After repair or replacement of faulty parts, conduct Clear Memory Mode <Ref. to EN(DOHC TURBO)-49, OPERATION, Clear Memory Mode.> and Inspection Mode <Ref. to EN(DOHC TURBO)-46, Inspection Mode.>.

- **WIRING DIAGRAM:**

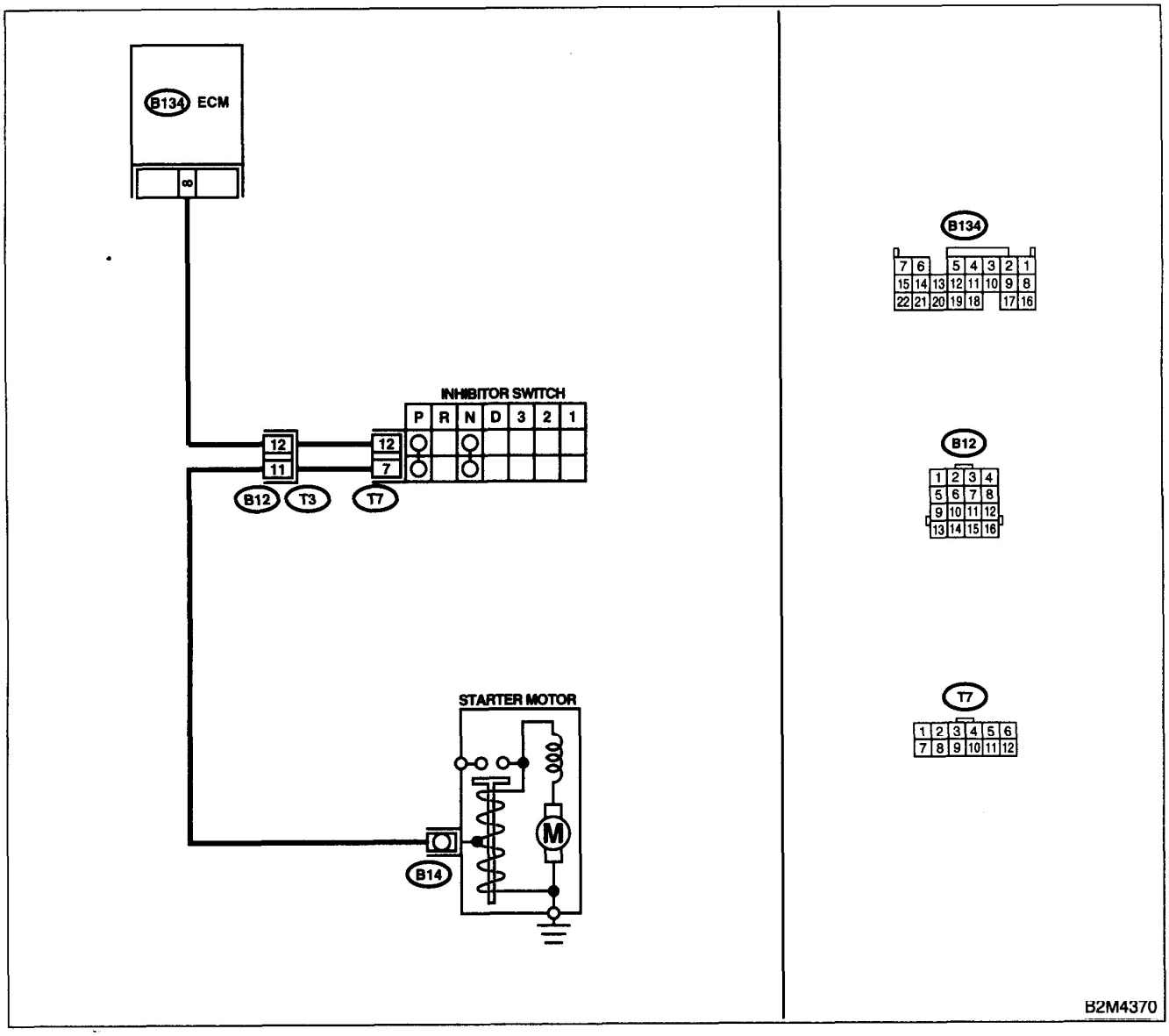

GETtheMANUALS.org

Step	Check	Yes	No
CHECK DTC P0705 ON DISPLAY.	Does the Subaru Select Monitor or OBD-II general scan tool indicate DTC P0705?	Inspect DTC P0705 using "List of Diagnostic Trouble Code (DTC)". <Ref. to EN(DOHC TURBO)-80, List of Diagnostic Trouble Code (DTC).>	Go to step **2.**
CHECK INPUT SIGNAL FOR ECM. 1)Turn the ignition switch to ON. 2)Measure the voltage between ECM and chassis ground. ***Connector & terminal*** ***(B134) No. 8 (+) — Chassis ground (–):***	Is the voltage between 4.5 and 5.5 V at except "N" and "P" positions?	Even if MIL lights up, the circuit has returned to a normal condition at this time.	Go to step **3.**
CHECK HARNESS BETWEEN ECM AND TRANSMISSION HARNESS CONNECTOR. 1)Turn the ignition switch to OFF. 2)Disconnect the connectors from ECM and transmission harness connector (T3). 3)Measure the resistance of harness between ECM connector and chassis ground. ***Connector & terminal*** ***(B134) No. 8 — Chassis ground:***	Is the resistance less than 10 Ω?	Repair ground short circuit in harness between ECM and transmission harness connector.	Go to step **4.**
CHECK TRANSMISSION HARNESS CONNECTOR. 1)Disconnect the connector from inhibitor switch. 2)Measure the resistance of harness between transmission harness connector and engine ground. ***Connector & terminal*** ***(T3) No. 12 — Engine ground:***	Is the resistance less than 10 Ω?	Repair ground short circuit in harness between transmission harness and inhibitor switch connector.	Go to step **5.**
CHECK INHIBITOR SWITCH. Measure the resistance between inhibitor switch connector receptacle's terminals in selector lever except for "N" position. ***Terminals*** ***No. 7 — No. 12:***	Is the resistance more than 1 MΩ at except "N" and "P" positions?	Go to step **6.**	Replace the inhibitor switch. <Ref. to AT-28, Inhibitor Switch.>
CHECK SELECTOR CABLE CONNECTION.	Is there any fault in selector cable connection to inhibitor switch?	Repair selector cable connection. <Ref. to CS-27, INSPECTION, Select Cable.>	Contact with SOA (Subaru distributor) service. NOTE: Inspection by DTM is required, because probable cause is deterioration of multiple parts.

GETtheMANUALS.org

DG:DTC P1594 — AUTOMATIC TRANSMISSION DIAGNOSIS INPUT SIGNAL CIRCUIT MALFUNCTION —

- **DTC DETECTING CONDITION:**
  - Two consecutive driving cycles with fault

CAUTION:
After repair or replacement of faulty parts, conduct Clear Memory Mode <Ref. to EN(DOHC TURBO)-49, OPERATION, Clear Memory Mode.> and Inspection Mode <Ref. to EN(DOHC TURBO)-46, Inspection Mode.>.

- **WIRING DIAGRAM:**

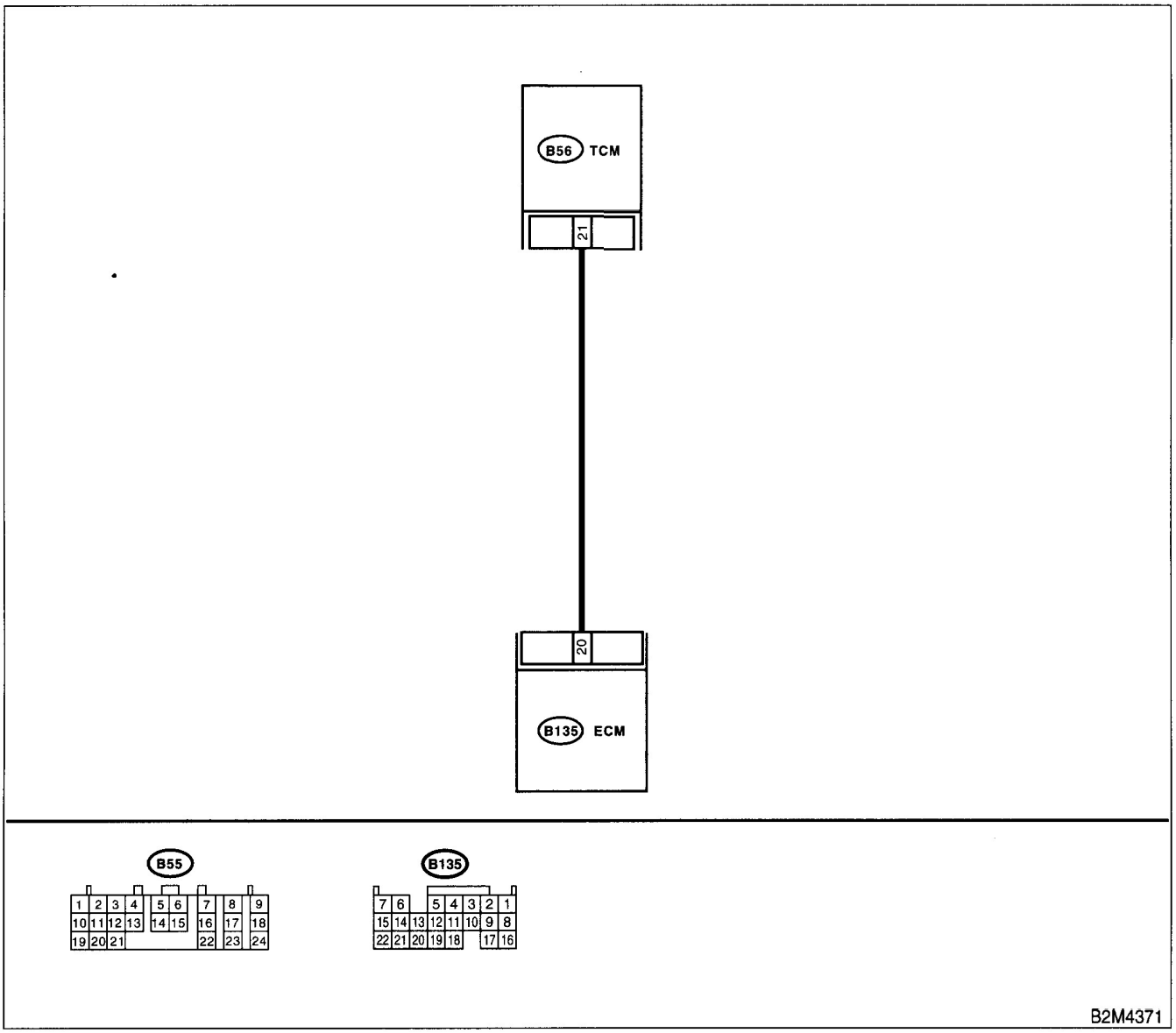

	Step	Check	Yes	No
1	**CHECK DRIVING CONDITION.** 1)Start and warm-up the engine until the radiator fan makes one complete rotation. 2)Drive the vehicle.	Is the AT shift control functioning properly?	Go to step **2.**	Replace the TCM. <Ref. to AT-45, Transmission Control Module (TCM).>

GETtheMANUALS.org

Step		Check	Yes	No
2	CHECK ACCESSORY.	Are car phone and/or CB installed on vehicle?	Repair grounding line of car phone or CB system.	Replace the TCM. <Ref. to AT-45, Transmission Control Module (TCM).>

GETTHEMANUALS.org

DH:DTC P1595 — AUTOMATIC TRANSMISSION DIAGNOSIS INPUT SIGNAL CIRCUIT LOW INPUT —

- **DTC DETECTING CONDITION:**
  - Two consecutive driving cycles with fault

CAUTION:
After repair or replacement of faulty parts, conduct Clear Memory Mode <Ref. to EN(DOHC TURBO)-49, OPERATION, Clear Memory Mode.> and Inspection Mode <Ref. to EN(DOHC TURBO)-46, Inspection Mode.>.

- **WIRING DIAGRAM:**

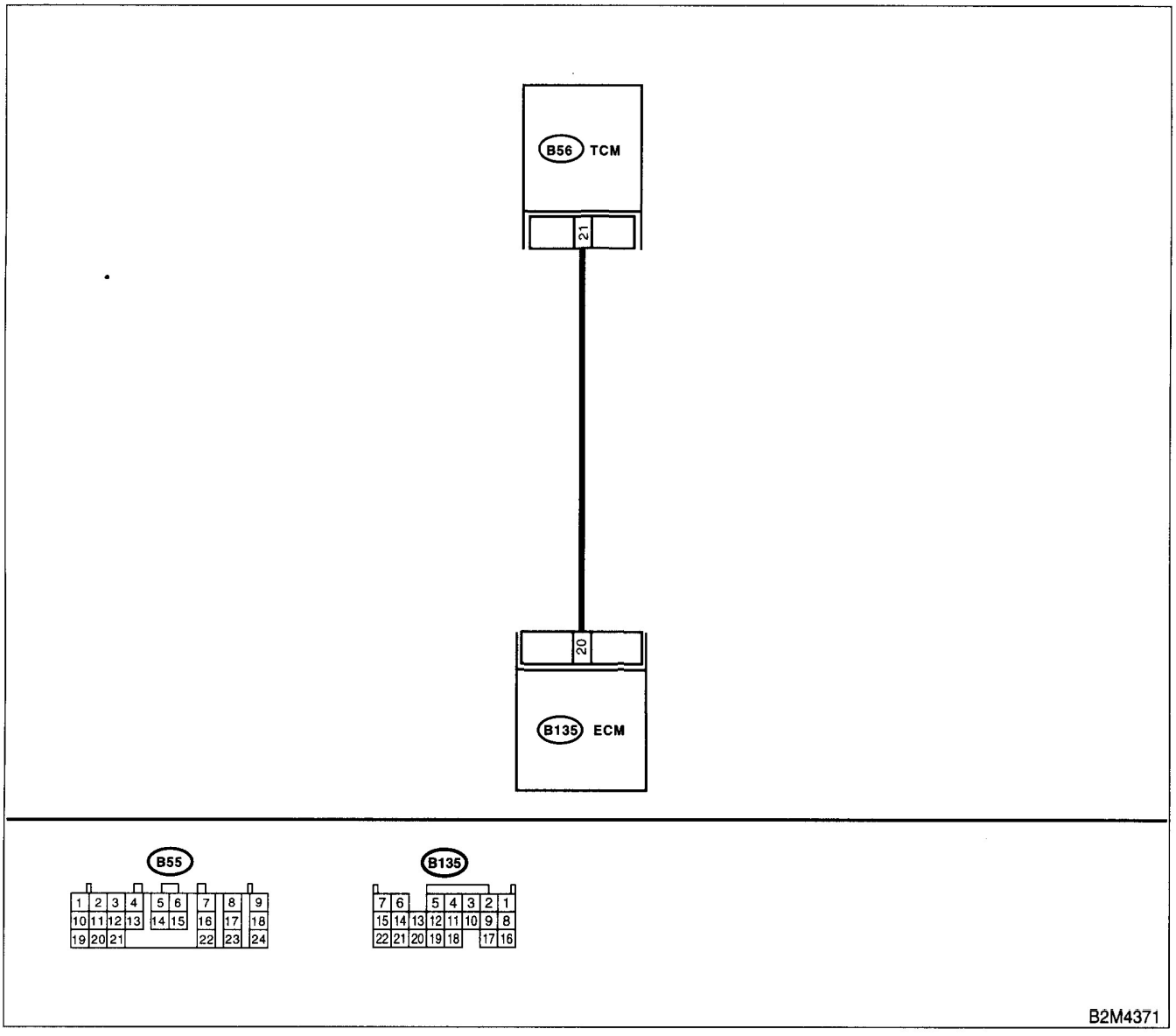

GET theMANUALS.org

	Step	Check	Yes	No
1	**CHECK HARNESS BETWEEN ECM AND TCM CONNECTOR.** 1)Turn the ignition switch to ON. 2)Measure the voltage between ECM and chassis ground. ***Connector & terminal*** ***(B135) No. 20 (+) — Chassis ground (–):***	Is the voltage less than 1 V?	Go to step **2.**	Even if MIL lights up, the circuit has returned to a normal condition at this time. NOTE: In this case, repair the following: • Poor contact in ECM connector • Poor contact in TCM connector
2	**CHECK HARNESS BETWEEN ECM AND TCM CONNECTOR.** 1)Turn the ignition switch to OFF. 2)Disconnect the connector from ECM and TCM. 3)Measure the resistance of harness between ECM and chassis ground. ***Connector & terminal*** ***(B135) No. 20 — Chassis ground:***	Is the resistance less than 10 Ω?	Repair ground short circuit in harness between ECM and TCM connector.	Go to step **3.**
3	**CHECK OUTPUT SIGNAL FOR ECM.** 1)Connect the connector to ECM. 2)Turn the ignition switch to ON. 3)Measure the voltage between ECM and chassis ground. ***Connector & terminal*** ***(B135) No. 20 (+) — Chassis ground (–):***	Is the voltage more than 5 V?	Go to step **4.**	Repair poor contact in ECM connector.
4	**CHECK TROUBLE CODE FOR AUTOMATIC TRANSMISSION.** Read the trouble code for automatic transmission. <Ref. to AT-24, Read Diagnostic Trouble Code (DTC).>	Does the trouble code appear for automatic transmission?	Inspect trouble code for automatic transmission. <Ref. to AT-44, Diagnostic Procedure with Diagnostic Trouble Code (DTC).>	Replace the TCM. <Ref. to AT-45, Transmission Control Module (TCM).>

GETtheMANUALS.org

DI: DTC P1596 — AUTOMATIC TRANSMISSION DIAGNOSIS INPUT SIGNAL CIRCUIT HIGH INPUT —

- **DTC DETECTING CONDITION:**
  - Two consecutive driving cycles with fault

CAUTION:
After repair or replacement of faulty parts, conduct Clear Memory Mode <Ref. to EN(DOHC TURBO)-49, OPERATION, Clear Memory Mode.> and Inspection Mode <Ref. to EN(DOHC TURBO)-46, Inspection Mode.>.

- **WIRING DIAGRAM:**

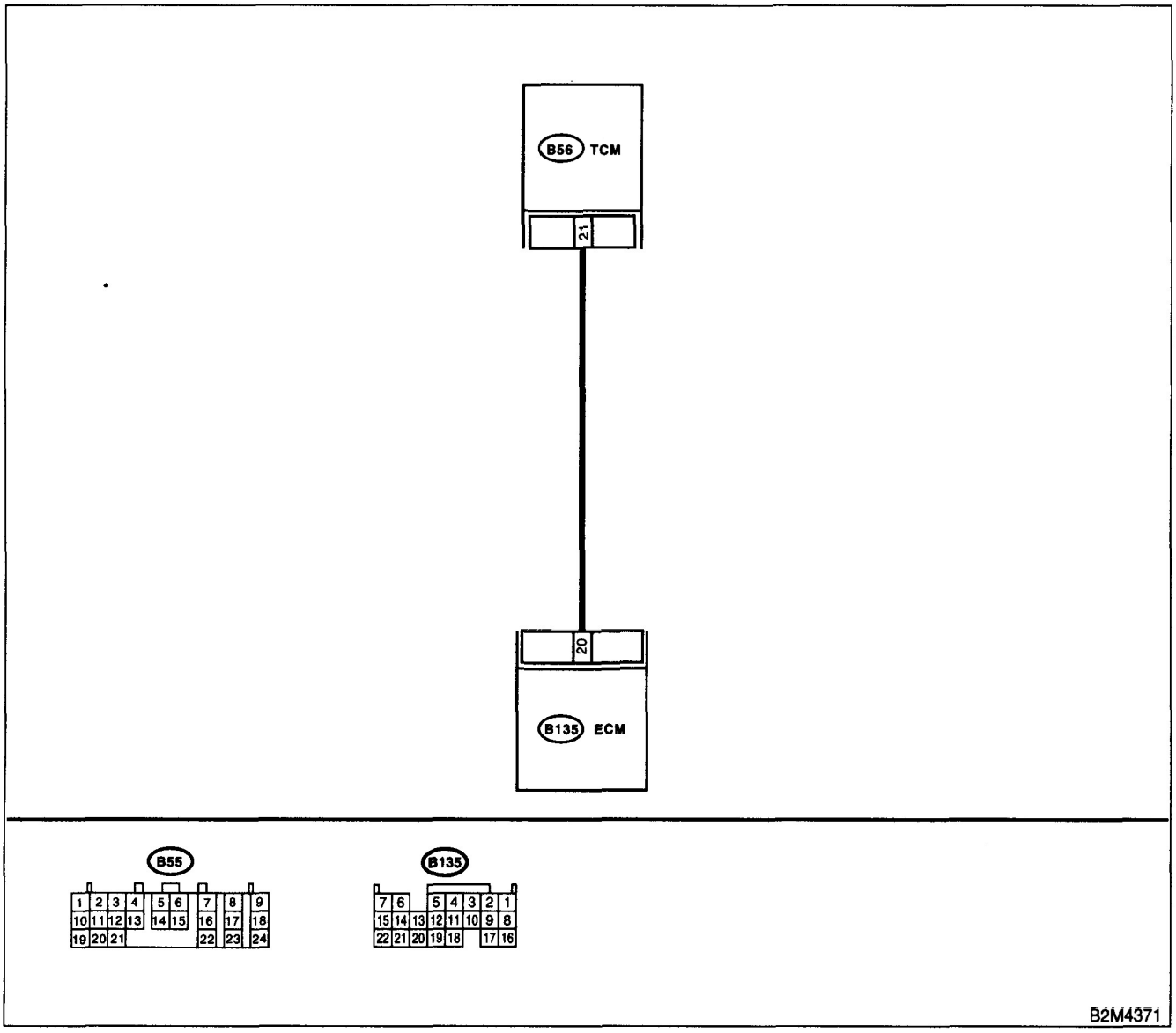

GETtheMANUALS.org

	Step	Check	Yes	No
1	**CHECK HARNESS BETWEEN ECM AND TCM CONNECTOR.** 1)Turn the ignition switch to ON. 2)Measure the voltage between ECM and chassis ground. ***Connector & terminal*** ***(B135) No. 20 (+) — Chassis ground (–):***	Is the voltage more than 10 V?	Repair battery short circuit in harness between ECM and TCM connector. After repair, replace the ECM. <Ref. to FU(DOHC TURBO)-47, Engine Control Module.>	Go to step **2.**
2	**CHECK HARNESS BETWEEN ECM AND TCM CONNECTOR.** Measure the voltage between ECM connector and chassis ground. ***Connector & terminal*** ***(B135) No. 20 (+) — Chassis ground (–):***	Is the voltage more than 4 V?	Go to step **5.**	Go to step **3.**
3	**CHECK HARNESS BETWEEN ECM AND TCM CONNECTOR.** Measure the voltage between ECM connector and chassis ground. ***Connector & terminal*** ***(B135) No. 20 (+) — Chassis ground (–):***	Is the voltage less than 1 V?	Repair poor contact in ECM connector.	Go to step **4.**
4	**CHECK OUTPUT SIGNAL FROM ECM.** Measure the voltage between ECM and chassis ground. ***Connector & terminal*** ***(B135) No. 20 (+) — Chassis ground (–):***	Does the voltage change from 1 V to 4 V while monitoring the value with voltage meter?	Even if MIL lights up, the circuit has returned to a normal condition at this time. NOTE: In this case, repair the following: • Poor contact in ECM connector • Poor contact in TCM connector	Contact with SOA (distributor) service. NOTE: Inspection by DTM is required, because probable cause is deterioration of multiple parts.
5	**CHECK HARNESS BETWEEN ECM AND TCM CONNECTOR.** Measure the voltage between TCM and chassis ground. ***Connector & terminal*** ***(B54) No. 20 (+) — Chassis ground (–):***	Is the voltage more than 4 V?	Go to step **6.**	Repair open circuit in harness between ECM and TCM connector.
6	**CHECK POOR CONTACT.** Check poor contact in TCM connector.	Is there poor contact in TCM connector?	Repair poor contact in TCM connector.	Check TCM power supply line and grounding line.

GETtheMANUALS.org

DJ:DTC P1698 — ENGINE TORQUE CONTROL CUT SIGNAL CIRCUIT LOW INPUT —

- **DTC DETECTING CONDITION:**
  - Two consecutive driving cycles with fault

CAUTION:
After repair or replacement of faulty parts, conduct Clear Memory Mode <Ref. to EN(DOHC TURBO)-49, OPERATION, Clear Memory Mode.> and Inspection Mode <Ref. to EN(DOHC TURBO)-46, Inspection Mode.>.

- **WIRING DIAGRAM:**

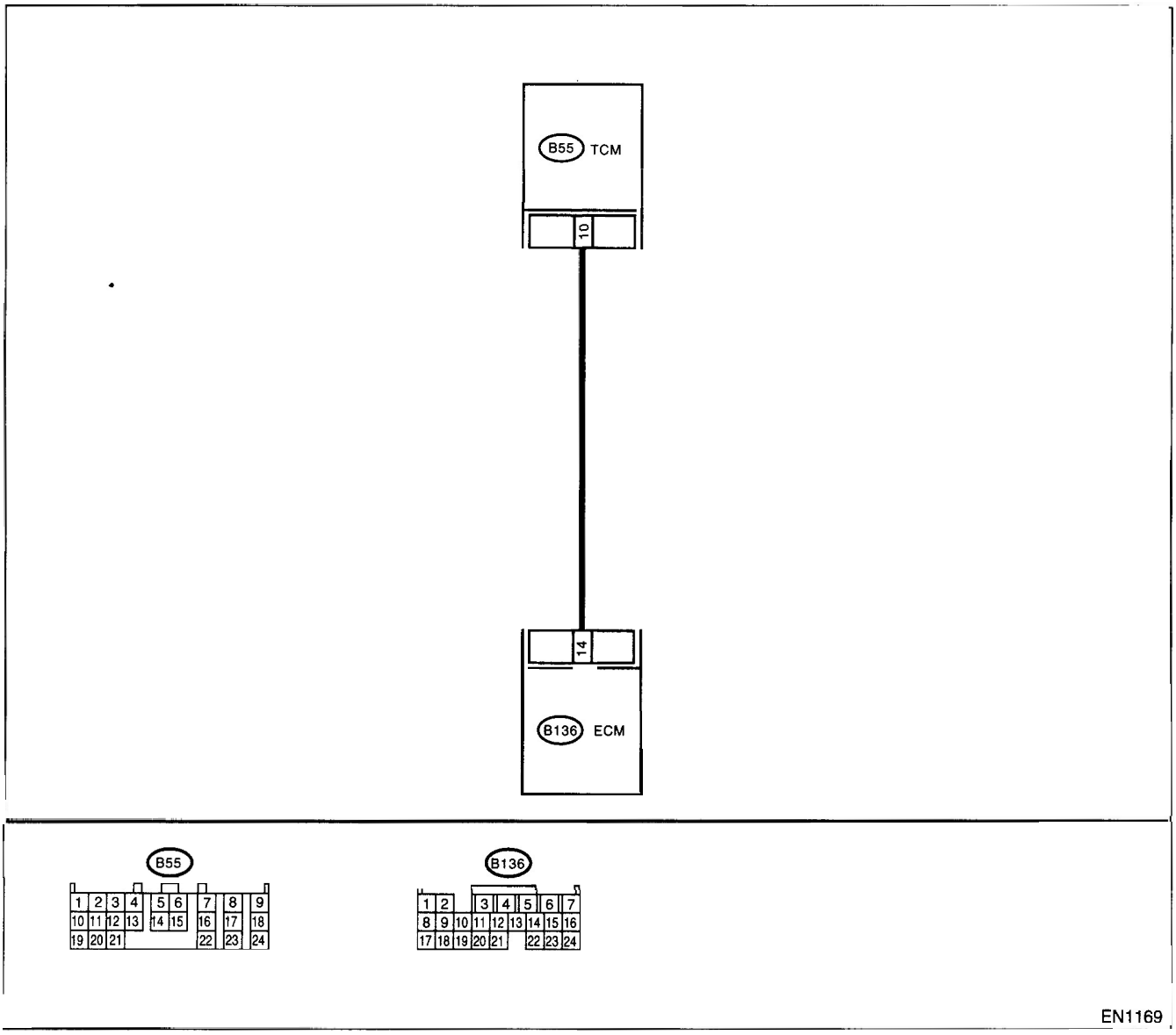

EN1169

GETtheMANUALS.org

	Step	Check	Yes	No
1	**CHECK OUTPUT SIGNAL FROM ECM.** 1)Start the engine, and warm-up the engine. 2)Turn the ignition switch to OFF. 3)Turn the ignition switch to ON. 4)Measure the voltage between ECM and chassis ground. ***Connector & terminal*** ***(B136) No. 14 (+) — Chassis ground (–):***	Is the voltage more than 3 V?	Repair poor contact in ECM connector.	Go to step **2.**
2	**CHECK HARNESS BETWEEN ECM AND TCM CONNECTOR.** 1)Turn the ignition switch to OFF. 2)Disconnect the connectors from ECM and TCM. 3)Measure the resistance of harness between ECM and chassis ground. ***Connector & terminal*** ***(B136) No. 14 — Chassis ground:***	Is the resistance less than 10 Ω?	Repair ground short circuit in harness between ECM and TCM connector.	Go to step **3.**
3	**CHECK HARNESS BETWEEN ECM AND TCM CONNECTOR.** Measure the resistance of harness between ECM and TCM connector. ***Connector & terminal*** ***(B136) No. 14 — (B55) No. 20:***	Is the resistance less than 1 Ω?	Repair poor contact in ECM or TCM connector.	Repair open circuit in harness between ECM and TCM connector.

GETtheMANUALS.org

DK:DTC P1699 — ENGINE TORQUE CONTROL CUT SIGNAL CIRCUIT HIGH INPUT —

- **DTC DETECTING CONDITION:**
  - Two consecutive driving cycles with fault

CAUTION:
After repair or replacement of faulty parts, conduct Clear Memory Mode <Ref. to EN(DOHC TURBO)-49, OPERATION, Clear Memory Mode.> and Inspection Mode <Ref. to EN(DOHC TURBO)-46, Inspection Mode.>.

- **WIRING DIAGRAM:**

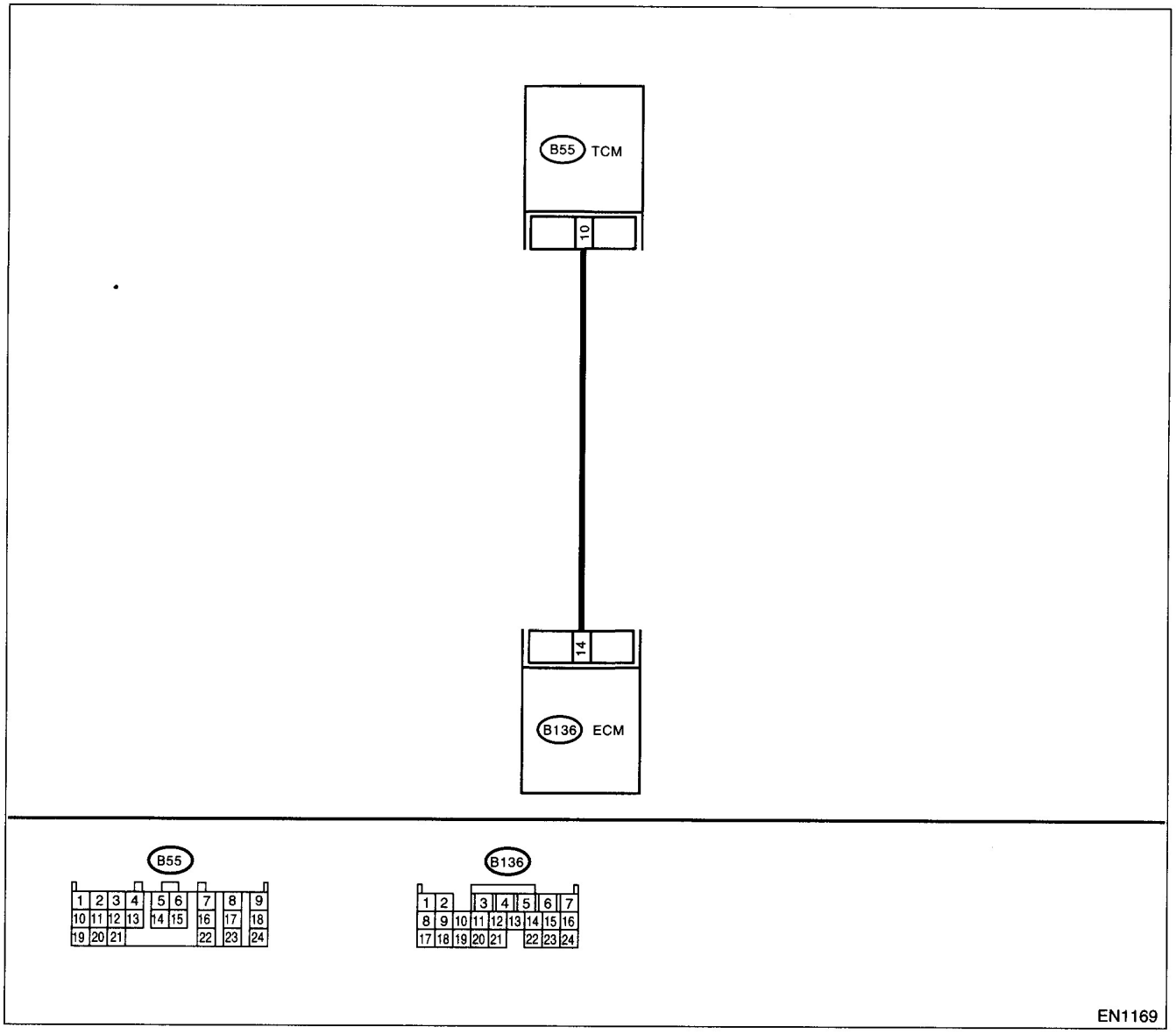

GETtheMANUALS.org

	Step	Check	Yes	No
1	**CHECK OUTPUT SIGNAL FROM ECM.** 1)Start the engine, and warm-up the engine. 2)Turn the ignition switch to OFF. 3)Disconnect the connector from TCM. 4)Turn the ignition switch to ON. 5)Measure the voltage between ECM and chassis ground. ***Connector & terminal*** ***(B136) No. 14 (+) — Chassis ground (–):***	Is the voltage less than 3 V?	Go to step **2.**	Repair battery short circuit in harness between ECM and TCM connector. After repair, replace the ECM. <Ref. to FU(DOHC TURBO)-47, Engine Control Module.>
2	**CHECK HARNESS BETWEEN ECM AND TCM CONNECTOR.** 1)Turn the ignition switch to OFF. 2)Measure the voltage between ECM and chassis ground. ***Connector & terminal*** ***(B136) No. 14 (+) — Chassis ground (–):***	Does the voltage change more than 10 V by shaking harness and connector of ECM while monitoring the value with voltage meter?	Repair battery short circuit in harness between ECM and TCM connector. After repair, replace the ECM. <Ref. to FU(DOHC TURBO)-47, Engine Control Module.>	Contact with SOA (distributor) service. NOTE: Inspection by DTM is required, because probable cause is deterioration of multiple parts.

GETtheMANUALS.org

DL:DTC P1701 — CRUISE CONTROL SET SIGNAL CIRCUIT MALFUNCTION FOR AUTOMATIC TRANSMISSION —

- **DTC DETECTING CONDITION:**
  - Two consecutive driving cycles with fault

CAUTION:
After repair or replacement of faulty parts, conduct Clear Memory Mode <Ref. to EN(DOHC TURBO)-49, OPERATION, Clear Memory Mode.> and Inspection Mode <Ref. to EN(DOHC TURBO)-46, Inspection Mode.>.

- **WIRING DIAGRAM:**

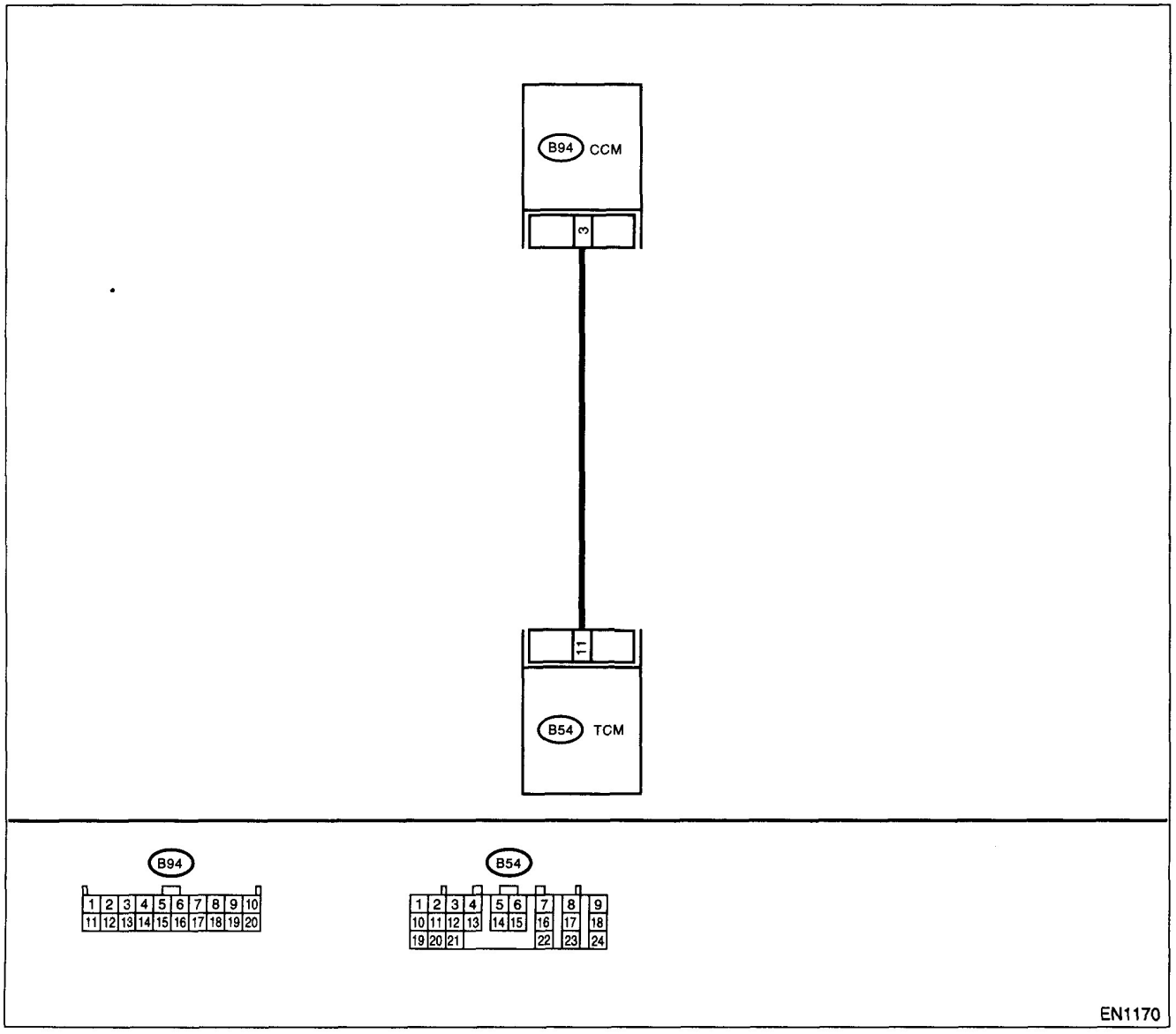

GETtheMANUALS.org

	Step	Check	Yes	No
1	**CHECK HARNESS BETWEEN TCM AND CCM CONNECTOR.** 1)Turn the ignition switch to OFF. 2)Disconnect the connectors from TCM and CCM. 3)Measure the resistance of harness between TCM and CCM connector. ***Connector & terminal*** ***(B55) No. 22 — (B94) No. 3:***	Is the resistance less than 1 Ω?	Go to step **2.**	Repair open circuit in harness between TCM and CCM connector.
2	**CHECK HARNESS BETWEEN TCM AND CCM CONNECTOR.** Measure the resistance of harness between TCM and chassis ground. ***Connector & terminal*** ***(B55) No. 22 — Chassis ground:***	Is the resistance less than 10 Ω?	Repair short circuit in harness between TCM and CCM connector.	Go to step **3.**
3	**CHECK INPUT SIGNAL FOR TCM.** 1)Connect the connector to TCM and CCM. 2)Lift-up the vehicle or set the vehicle on free rollers. **CAUTION:** **On AWD models, raise all wheels off ground.** 3)Start the engine. 4)Turn the cruise control main switch to ON. 5)Move selector lever to "D" and slowly increase vehicle speed to 50 km/h (31 MPH). 6)Turn the cruise control command switch to ON. 7)Measure the voltage between TCM and chassis ground. ***Connector & terminal*** ***(B55) No. 11 (+) — Chassis ground (–):***	Is the resistance less than 1 V?	Go to step **4.**	Check cruise control command switch circuit. <Ref. to CC-7, INSPECTION, Cruise Control Command Switch.>
4	**CHECK POOR CONTACT.** Check poor contact in TCM connector.	Is there poor contact in TCM connector?	Repair poor contact in TCM connector.	Replace the TCM. <Ref. to AT-45, Transmission Control Module (TCM).>

GETtheMANUALS.org

DM:DTC P1711 — ENGINE TORQUE CONTROL SIGNAL 1 CIRCUIT MALFUNCTION —

- **DTC DETECTING CONDITION:**
  - Two consecutive driving cycles with fault
- **TROUBLE SYMPTOM:**
  - Excessive shift shock

CAUTION:
After repair or replacement of faulty parts, conduct Clear Memory Mode <Ref. to EN(DOHC TURBO)-49, OPERATION, Clear Memory Mode.> and Inspection Mode <Ref. to EN(DOHC TURBO)-46, Inspection Mode.>.

- **WIRING DIAGRAM:**

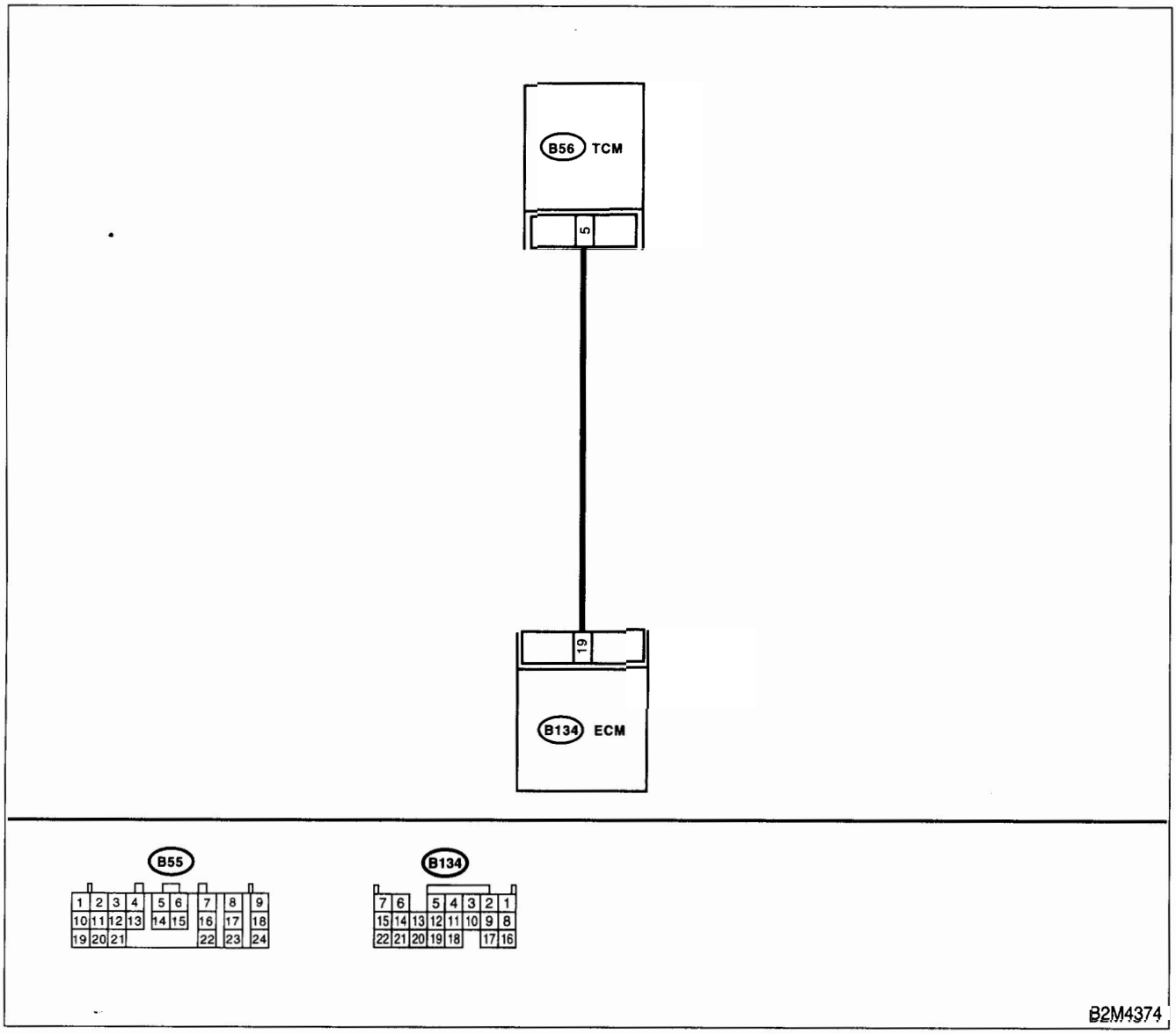

GETtheMANUALS.org

	Step	Check	Yes	No
1	**CHECK INPUT SIGNAL FOR ECM.** 1)Turn the ignition switch to ON. 2)Measure the voltage between ECM and chassis ground. ***Connector & terminal*** ***(B135) No. 19 (+) — Chassis ground (–):***	Is the voltage more than 4.5 V?	Go to step **2.**	Go to step **4.**
2	**CHECK INPUT SIGNAL FOR ECM.** Measure the voltage between ECM and chassis ground. ***Connector & terminal*** ***(B135) No. 19 (+) — Chassis ground (–):***	Is the voltage more than 10 V?	Repair battery short circuit in harness between ECM and TCM connector.	Go to step **3.**
3	**CHECK POOR CONTACT.** Check poor contact in ECM connector.	Is there poor contact in ECM connector?	Repair poor contact in ECM connector.	Replace the ECM. <Ref. to FU(DOHC TURBO)-47, Engine Control Module.>
4	**CHECK HARNESS BETWEEN ECM AND TCM CONNECTOR.** 1)Turn the ignition switch to OFF. 2)Disconnect the connectors from ECM and TCM. 3)Measure the resistance of harness between ECM and TCM connector. ***Connector & terminal*** ***(B135) No. 19 — (B54) No. 13:***	Is the resistance less than 1 Ω?	Go to step **5.**	Repair open circuit in harness between ECM and TCM connector.
5	**CHECK HARNESS BETWEEN ECM AND TCM CONNECTOR.** Measure the resistance of harness between ECM and chassis ground. ***Connector & terminal*** ***(B135) No. 19 — Chassis ground:***	Is the resistance less than 10 Ω?	Repair ground short circuit in harness between ECM and TCM connector.	Go to step **6.**
6	**CHECK POOR CONTACT.** Check poor contact in TCM connector.	Is there poor contact in TCM connector?	Repair poor contact in TCM connector.	Replace the TCM. <Ref. to AT-45, Transmission Control Module (TCM).>

GETtheMANUALS.org

DN:DTC P1712 — ENGINE TORQUE CONTROL SIGNAL 2 CIRCUIT MALFUNCTION —

- **DTC DETECTING CONDITION:**
  - Two consecutive driving cycles with fault
- **TROUBLE SYMPTOM:**
  - Excessive shift shock

CAUTION:
After repair or replacement of faulty parts, conduct Clear Memory Mode <Ref. to EN(DOHC TURBO)-49, OPERATION, Clear Memory Mode.> and Inspection Mode <Ref. to EN(DOHC TURBO)-46, Inspection Mode.>.

- **WIRING DIAGRAM:**

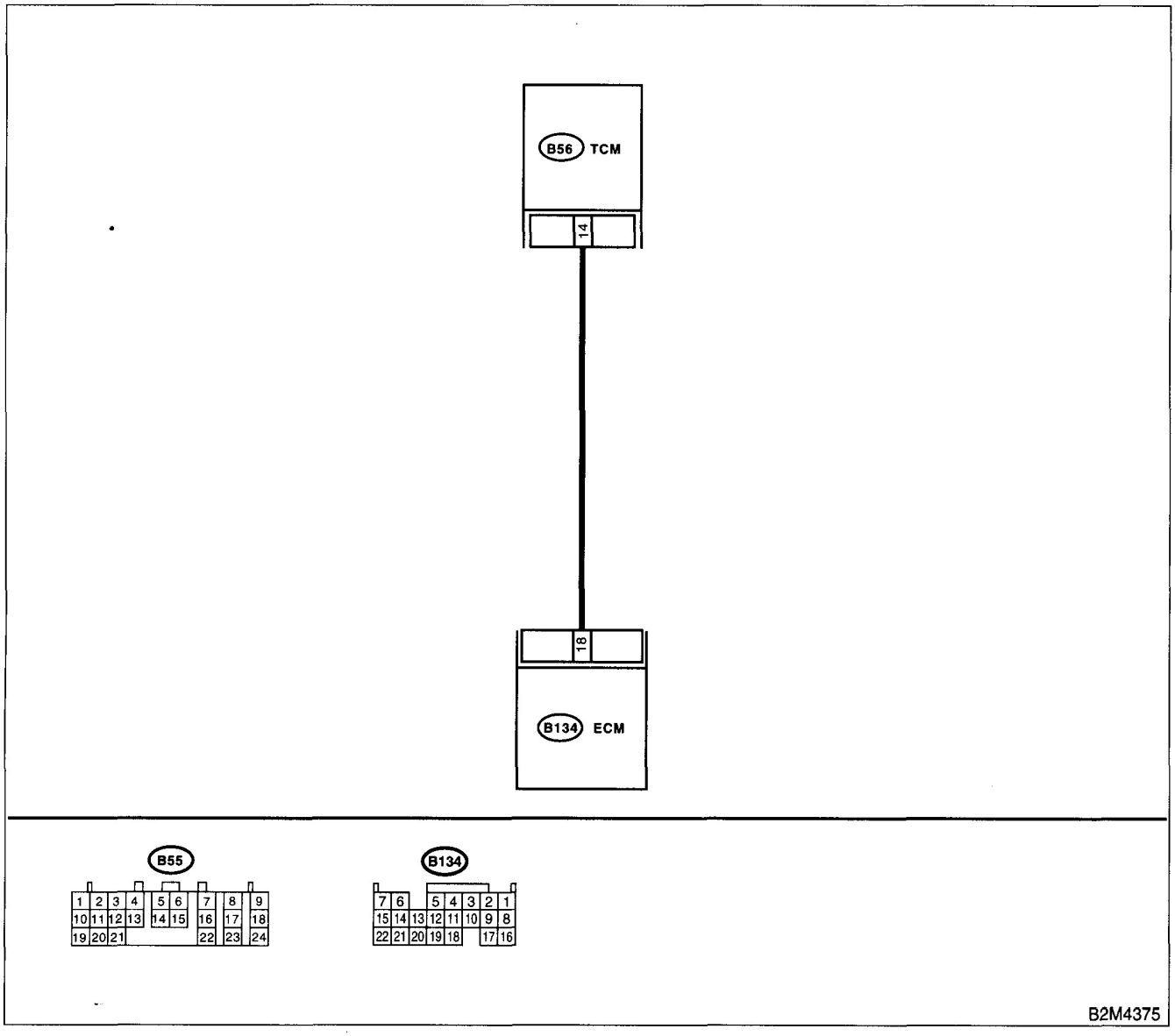

GETtheMANUALS.org

	Step	Check	Yes	No
1	**CHECK INPUT SIGNAL FOR ECM.** 1)Turn the ignition switch to ON. 2)Measure the voltage between ECM and chassis ground. ***Connector & terminal*** ***(B134) No. 18 (+) — Chassis ground (–):***	Is the voltage more than 4.5 V?	Go to step **2.**	Go to step **4.**
2	**CHECK INPUT SIGNAL FOR ECM.** Measure the voltage between ECM and chassis ground. ***Connector & terminal*** ***(B134) No. 18 (+) — Chassis ground (–):***	Is the voltage more than 10 V?	Repair battery short circuit in harness between ECM and TCM connector.	Go to step **3.**
3	**CHECK POOR CONTACT.** Check poor contact in ECM connector.	Is there poor contact in ECM connector?	Repair poor contact in ECM connector.	Replace the ECM. <Ref. to FU(DOHC TURBO)-47, Engine Control Module.>
4	**CHECK HARNESS BETWEEN ECM AND TCM CONNECTOR.** 1)Turn the ignition switch to OFF. 2)Disconnect the connectors from ECM and TCM. 3)Measure the resistance of harness between ECM and TCM connector. ***Connector & terminal*** ***(B134) No. 18 — (B56) No. 4:***	Is the resistance less than 1 Ω?	Go to step **5.**	Repair open circuit in harness between ECM and TCM connector.
5	**CHECK HARNESS BETWEEN ECM AND TCM CONNECTOR.** Measure the resistance of harness between ECM and chassis ground. ***Connector & terminal*** ***(B134) No. 18 — Chassis ground:***	Is the resistance less than 10 Ω?	Repair ground short circuit in harness between ECM and TCM connector.	Go to step **6.**
6	**CHECK POOR CONTACT.** Check poor contact in TCM connector.	Is there poor contact in TCM connector?	Repair poor contact in TCM connector.	Replace the TCM. <Ref. to AT-45, Transmission Control Module (TCM).>

GETtheMANUALS.org

19.General Diagnostic Table

A: INSPECTION

1. ENGINE

NOTE:
Malfunction of parts other than those listed is also possible. <Ref. to ME(DOHC TURBO)-91, Engine Trouble in General.>

Symptom	Problem parts
1. Engine stalls during idling.	1) Idle air control solenoid valve 2) Pressure sensor 3) Mass air flow and intake temperature sensor 4) Ignition parts (*1) 5) Engine coolant temperature sensor (*2) 6) Crankshaft position sensor (*3) 7) Camshaft position sensor (*3) 8) Fuel injection parts (*4)
2. Rough idling	1) Idle air control solenoid valve 2) Pressure sensor 3) Mass air flow and intake temperature sensor 4) Engine coolant temperature sensor (*2) 5) Ignition parts (*1) 6) Air intake system (*5) 7) Fuel injection parts (*4) 8) Throttle position sensor 9) Crankshaft position sensor (*3) 10) Camshaft position sensor (*3) 11) Oxygen sensor 12) Fuel pump and fuel pump relay
3. Engine does not return to idle.	1) Idle air control solenoid valve 2) Engine coolant temperature sensor 3) Accelerator cable (*6) 4) Throttle position sensor 5) Pressure sensor 6) Mass air flow sensor
4. Poor acceleration	1) Pressure sensor 2) Mass air flow and intake temperature sensor 3) Throttle position sensor 4) Fuel injection parts (*4) 5) Fuel pump and fuel pump relay 6) Engine coolant temperature sensor (*2) 7) Crankshaft position sensor (*3) 8) Camshaft position sensor (*3) 9) A/C switch and A/C cut relay 10) Engine torque control signal circuit 11) Ignition parts (*1)
5. Engine stalls or engine sags or hesitates at acceleration.	1) Pressure sensor 2) Mass air flow and intake temperature sensor 3) Engine coolant temperature sensor (*2) 4) Crankshaft position sensor (*3) 5) Camshaft position sensor (*3) 6) Purge control solenoid valve 7) Fuel injection parts (*4) 8) Throttle position sensor 9) Fuel pump and fuel pump relay

GETtheMANUALS.org