WIND

DRIVER'S HANDBOOK

RENAULT

RENAULT recommends ELF

ELF has developed a complete range of lubricants for RENAULT:

- engine oils
- manual and automatic gearbox oils

Warning: to ensure the engine operates optimally, the use of a lubricant may be restricted to certain vehicles. Please refer to your maintenance document.

Benefiting from the research applied to Formula 1, lubricants are very high-tech products.

Updated with the help of RENAULT's technical teams, this range is perfectly compatible with the specific features of the brand's vehicles.

- ELF lubricants enhance your vehicle's performance significantly.

RENAULT recommends approved ELF lubricants for oil changes and top-ups.
Contact your RENAULT Dealer or visit www.lubrifiants.elf.com

elf

Une marque de TOTAL

Photo credit: Total/DPPI Imacom group

Welcome to your new vehicle

This Driver's Handbook contains the information necessary:

– for you to familiarise yourself with your vehicle, to use it to its best advantage and to benefit fully from the all the functions and the technical developments it incorporates.

– to ensure that it always gives the best performance by following the simple, but comprehensive advice concerning regular maintenance.

– to enable you to deal quickly with minor faults not requiring specialist attention.

It is well worth taking a few minutes to read this handbook to familiarise yourself with the information and guidelines it contains about the vehicle and its functions and new features. If certain points are still unclear, our Network technicians will be only too pleased to provide you with any additional information.

The following symbol will help you when reading this handbook:

To indicate a hazard, danger or safety recommendation.

The descriptions of the models given in this handbook are based on the technical specifications at the time of writing. **This handbook covers all items of equipment** (both standard and optional) **available for these models but whether or not these are fitted to the vehicle depends on the version, options selected and the country where the vehicle is sold.**

This handbook may also contain information about items of equipment to be introduced later in the model year.

Throughout the manual, the "approved Dealer" is your RENAULT Dealer.

Enjoy driving your new vehicle.

Translated from French. Copying or translation, in part or in full, is forbidden unless prior written permission has been obtained from the vehicle manufacturer.

0.2

C O N T E N T S

Sections

Getting to know your vehicle 1

Driving 2

Your comfort 3

Maintenance 4

Practical advice 5

Technical specifications 6

Alphabetical index 7

0.4

Section 1: Getting to know your vehicle

Key, radio frequency remote control: general information, use, deadlocking 1.2
Doors 1.6
Automatic locking when driving 1.10
Seat belts. 1.12
Additional methods of restraint: 1.15
to the front seat belts 1.15
side protection 1.18
Child safety: general information 1.20
choosing a child seat mounting 1.23
fitting a child seat 1.24
deactivating, activating the front passenger airbag 1.27
Driving position 1.30
Warning lights 1.34
on-board computer 1.40
Steering wheel. 1.48
Power-assisted steering 1.48
Clock and exterior temperature 1.49
Door mirrors. 1.50
Audible and visual signals 1.51
Exterior lighting and signals. 1.52
Windscreen washers and wipers. 1.54
Fuel tank (filling with fuel) 1.56

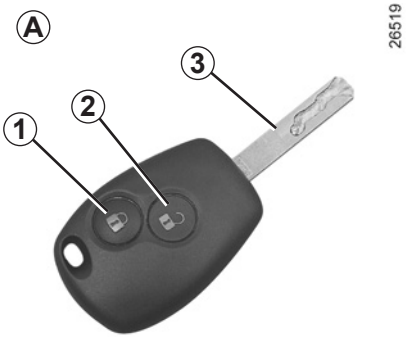

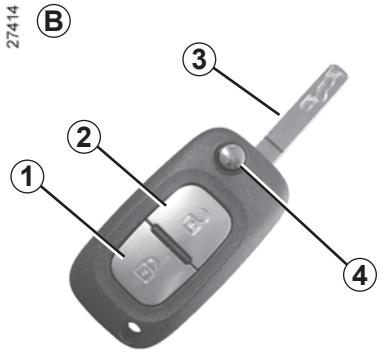

Key, radio frequency remote control *A* or *B*

1 Locking the doors and luggage compartment lid.

2 Unlocking the doors and luggage compartment lid.

3 Ignition key, driver's door and fuel filler cap.

4 Locking/unlocking the key insert for remote control ***B***.
To release insert ***3*** from its housing, press button ***4***; it will come out automatically.
To reinsert it in its housing, press button ***4*** and guide insert ***3*** into the storage position.

Advice

Avoid leaving the remote control in hot, cold or humid areas.

The key must not be used for any function other than those described in the handbook (removing the cap from a bottle, etc.).

Radio frequency remote control operating range

This varies according to the environment: take care not to lock or unlock the doors by inadvertently pressing the buttons on the remote control.

Note: on certain vehicles, if a door is not opened within approximately 2 minutes of the door being unlocked by remote control, the doors will lock again automatically.

Interference

Interference by factors in the immediate vicinity (external installations or the use of equipment operating on the same frequency as the remote control) may affect the operation of the remote control.

Electric central locking

Locking/unlocking from the outside

In some cases, the radio frequency remote control may not work:

– if the vehicle is located in a zone of high electromagnetic radiation;

– if appliances are operating on the same frequency as the remote control (mobile phone, etc.);

– if the remote control battery is worn or flat, etc.

Driver's responsibility
Never leave your vehicle with the key or remote control inside and never leave a child (or a pet) unsupervised, even for a short while.
They may pose a risk to themselves or to others by starting the engine, activating equipment such as the electric windows or by locking the doors.
Risk of serious injury.

For replacement, or if you require an additional remote control
You must only contact an approved Dealer.

– To replace a remote control, the vehicle must be taken to an approved Dealer as both the vehicle and the remote control are needed to initialise the system.
– Depending on the vehicle, you have the option of using up to four remote controls.

Remote control unit failure

Make sure that the correct battery type is being used, and that the battery is in good condition and inserted correctly. These batteries have a service life of approximately two years.
Refer to the information on the "Key, radio frequency remote control: batteries" in Section 5 for the battery changing procedure.

KEY/RADIO FREQUENCY REMOTE CONTROL: use

Remote controls ***A*** and ***B*** are used to lock or unlock the doors.

They are powered by a battery which must be replaced (refer to the information on the “Key/radio frequency remote control: batteries” in Section 5).

Locking the doors

Pressing button ***1*** locks the doors and tailgate.

The side indicator lights and hazard warning lights flash **twice** to indicate that the doors have been **locked**.

Unlocking the doors

Pressing button ***2*** unlocks the doors and tailgate.

The side indicator lights and hazard warning lights flash **once** to indicate that the doors have been **unlocked**.

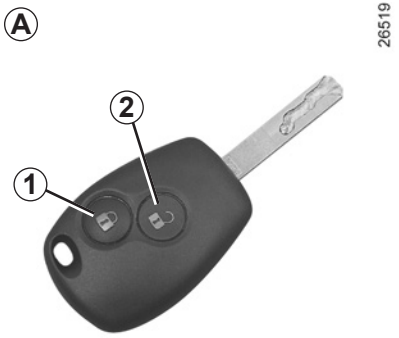

Note: depending on the vehicle, when a door or the luggage compartment lid is left open or not properly closed, all the doors and the luggage compartment lid lock/unlock quickly without the hazard warning lights flashing.

To lock/unlock the doors from inside, refer to the information on “Central door locking/unlocking” in Section 1.

The key must not be used for any function other than those described in the handbook (removing the cap from a bottle, etc.).

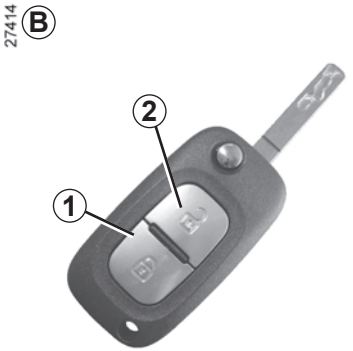

Driver’s responsibility

Never leave your vehicle with the key or remote control inside and never leave a child (or a pet) unsupervised, even for a short while.
They may pose a risk to themselves or to others by starting the engine, activating equipment such as the electric windows or by locking the doors.
Risk of serious injury.

Deadlocking of the doors and luggage compartment lid

(for some countries)

This allows you to lock the doors and tailgate and to prevent the doors from being opened with the interior handles (by breaking the window and then trying to open the doors from the inside).

To activate deadlocking

Press button ***1*** twice in quick succession.

The hazard warning lights and indicator lights flash **five** times to indicate that the doors have locked.

Never use deadlocking if someone is still inside the vehicle.

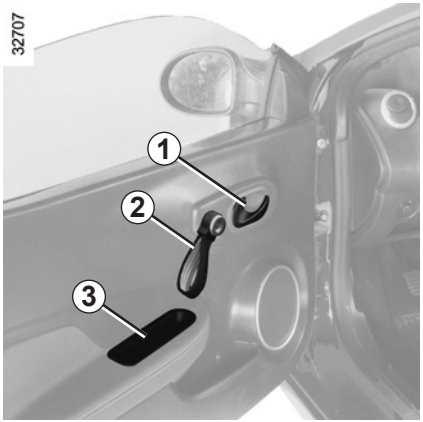

Opening from the inside

Pull handle ***1***.

Closing from the inside

Depending on the vehicle, pull handle ***2*** or ***3***.

Driver's responsibility

If you decide to keep the doors locked when you are driving, remember that it may be more difficult for those assisting you to gain access to the passenger compartment in the event of an emergency.

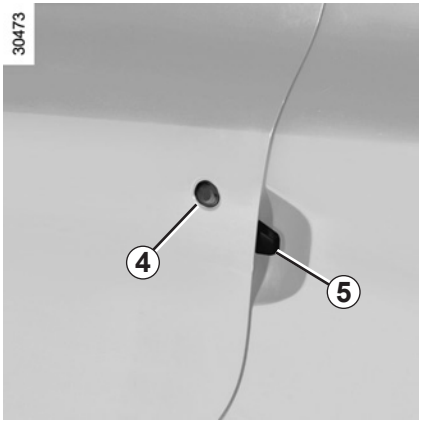

Opening manually from the outside

Using the key, unlock left-hand door lock ***4***. Place your hand under handle ***5***. Lift the handle and then pull the door towards you.

Lights-on warning buzzer

If you have left the lights on after switching off the ignition, a warning buzzer will sound when the driver's door is opened (to prevent the battery from going flat, etc.).

As a safety precaution, the doors should only be opened or closed when the vehicle is stationary.

Driver's responsibility when parking or stopping the vehicle

Never leave an animal, child or adult who is not self-sufficient alone on your vehicle, even for a short time.
They may pose a risk to themselves or to others by starting the engine, activating equipment such as the electric windows or by locking the doors.
Also, in hot and/or sunny weather, please remember that the temperature inside the passenger compartment increases very quickly.
RISK OF DEATH OR SERIOUS INJURY.

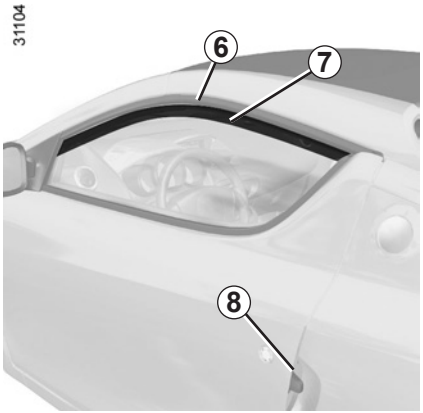

Operating faults

In the event of a battery fault

With the vehicle unlocked:

- **to open the door**: lift handle ***8***, push the top of window ***7*** then pull the door gently towards you to prevent damage to seal ***6***;
- **to close the window**: push the top of the window (zone ***7***) while holding the door to enable it to pass under seal ***6***, then close the door without banging it.

In the event of a fault with the electric windows:

- The window does not lower when the door is opened. If this happens, to close the door, proceed as described in the section entitled “In the event of a battery fault”.
- The window does lower when the door is opened but does not close when the door is closed.

In these two cases, please refer to the paragraph entitled “Electric windows” in Section 3 to reinitialise the window system.

If the problem persists after re-initialisation, please contact an authorised dealer.

Door locking is accompanied by the windows closing.

Risk of serious injury.

Do not close the door by holding the window.

Make sure you do not place your fingers too high up in zone **7**.

Risk of injury.

Every time one of the doors is opened, the window lowers by a few millimetres to facilitate door movement. The window closes as soon as the door is closed.
If there is any ice or snow preventing the window from lowering when one of the doors is opened, this ice or snow must be removed to free the window before the door is closed.
If you need to disconnect the battery (breakdown etc.), lower the windows to make handling the doors easier whilst the battery is disconnected.

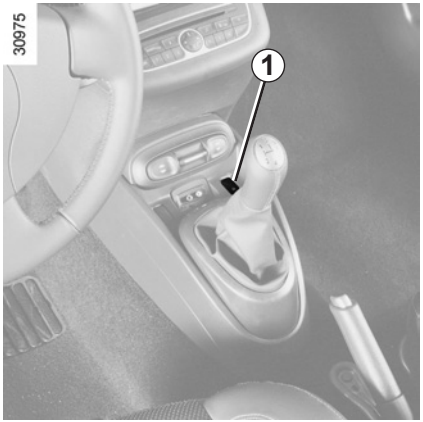

Electric central locking
(depending on vehicle)

The door and luggage compartment can be locked and unlocked simultaneously.

Lock or unlock by pressing button ***1***.

The doors cannot be locked/unlocked with a door open.

If a door is open or not properly closed, the doors lock and then quickly unlock.

Doors and tailgate status indicator light

With the ignition on, the indicator light integrated in button *1* informs you of the status of the doors and luggage compartment lid:

– the indicator light is on when the doors/tailgate are locked;

– when the doors are unlocked (or not properly closed) the indicator light is off.

With the ignition switched off, when you lock the doors using the remote control, the indicator light stays on for about a minute, then goes out.

Driver's responsibility

Never leave your vehicle with the key or remote control inside.

If you decide to keep the doors locked when you are driving, remember that it may be more difficult for those assisting you to gain access to the passenger compartment in the event of an emergency.

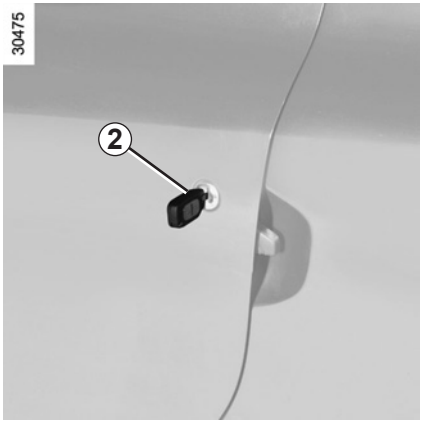

Manual control

Using the key
Lock or unlock the doors on the driver's side by inserting the key fully into lock ***2***, then turning it.

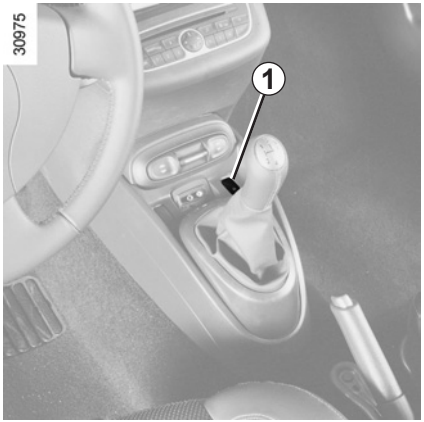

Unlocking the doors and tailgate

Using the radio frequency remote control (refer to the information on the "Key/Radio frequency remote control" in Section 1).

From the outside, unlock the driver's door using the ignition key (refer to the information on "Opening/Closing the doors" in Section 1).

Locking the doors and tailgate

Using the interior door locking/unlocking control.

With the engine off and the driver's door open, switch on the ignition and switch it off again.

Press button ***1*** for more than five seconds, then get out of the vehicle with the remote control with you and close the driver's door.

When the door is closed, all the doors and the tailgate will be locked.
The vehicle can only be unlocked from the outside with the ignition key, for the driver's door.

Make sure you have your remote control with you before you leave your vehicle.

AUTOMATIC LOCKING WHEN DRIVING

You must first decide if you want to activate this function.

To activate

With the ignition on, press central door locking button ***1*** for about five seconds, until a double beep is heard.

To deactivate

With the ignition on, press central door locking button ***1*** for about five seconds, until a double beep is heard.

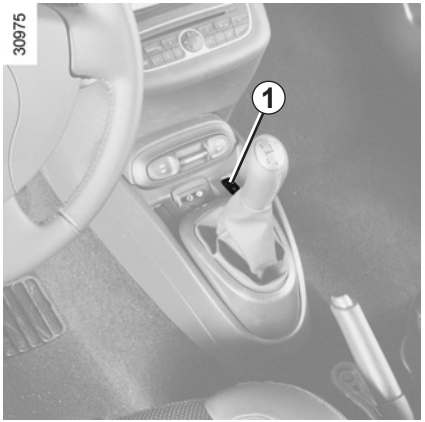

Operating principle

When the vehicle is started, the system automatically locks the doors as soon as a speed of 4 mph (7 km/h) is reached.

The button's indicator light ***1*** comes on.

The door can be unlocked:

– by opening a door when stationary.

  Note: if a door is opened, it will automatically be locked again when the vehicle reaches a speed of approximately 4 mph (7 km/h);

– by pressing door unlocking button ***1***.

Operating faults

If you find an operating fault (no automatic locking, the indicator light for button ***1*** does not light up when trying to lock the doors and luggage compartment lid, etc.), firstly check that the doors and luggage compartment lid are properly closed. If they are properly closed, contact an approved dealer.

Driver's responsibility

If you decide to keep the doors locked when you are driving, remember that it may be more difficult for those assisting you to gain access to the passenger compartment in the event of an emergency.

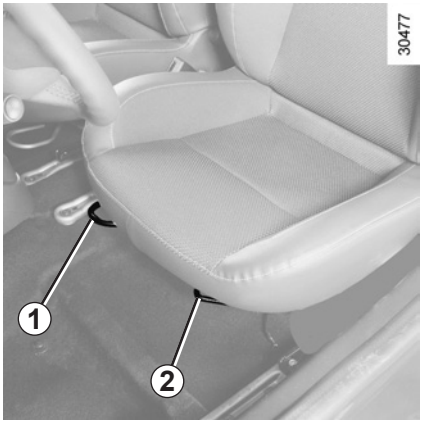

To move the seat forwards or back

Lift handle ***1*** to release. Release the handle once the seat is in the correct position and ensure that the seat is locked.

To raise or lower the seat base

Depending on the vehicle, lift handle ***2***. Release the handle once the seat is in the correct position and ensure that the seat is locked.

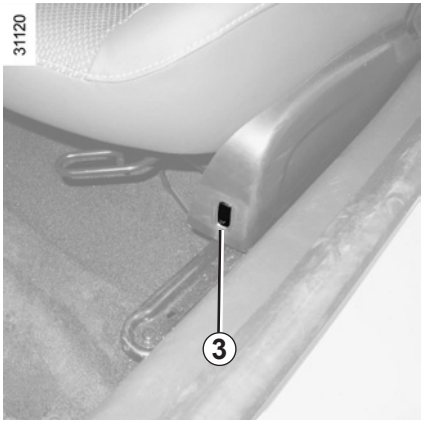

Heated seats

(depending on the vehicle)

With the ignition on, press switch ***3***. The integrated indicator comes on.

The system, which has a thermostat, decides whether or not the heating is needed.

To tilt the seatback

Use lever ***4*** to tilt the seatback to the desired position.

For safety reasons, carry out any adjustments when the vehicle is not being driven.

We would advise you not to recline the seatbacks too far to ensure that the effectiveness of the seat belts is not reduced.

Make sure that the seatbacks are correctly locked in place.

Nothing should be placed on the floor (area in front of driver) as such objects may slide under the pedal during braking manoeuvres, thus obstructing its use.

Always wear your seat belt when travelling in your vehicle. You must also comply with the legislation of the particular country you are in.

Incorrectly adjusted or twisted seat belts may cause injuries in the event of an accident.

Use one seat belt per person, whether child or adult.

Even pregnant women should wear a seat belt. In this case, ensure that the lap belt is not exerting too much pressure on the abdomen, but do not allow any slack.

Before starting, first adjust your driving position, then ask all occupants to adjust their seat belts to ensure optimum protection.

Adjusting your driving position

- **Sit well back in your seat** (having first removed your coat or jacket). This is essential to ensure your back is positioned correctly;
- **adjust the distance between the seat and the pedals.** Your seat should be as far back as possible while still allowing you to depress the clutch pedal fully. The seatback should be adjusted so that your arms are slightly bent when you hold the steering wheel;
- **adjust the height of the seat.** This adjustment allows you to select the seat position which offers you the best possible view;
- **adjust the position of the steering wheel.**

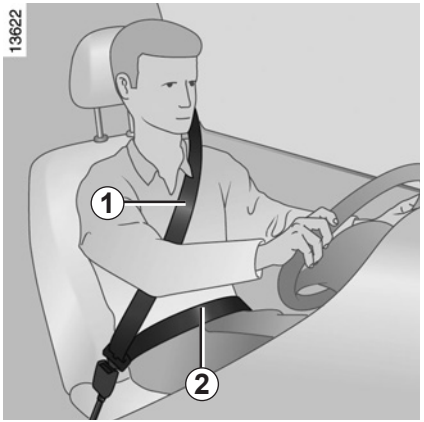

Adjusting the seat belts

Sit with your back firmly against the seatback.

Shoulder strap ***1*** should be as close as possible to the base of the neck but not on it.

Lap belt ***2*** should be worn flat over the thighs and against the pelvis.

The seat belt should be worn so that it is as close as possible to your body, i.e.: avoid wearing heavy clothing or keeping bulky objects under the belts, etc.

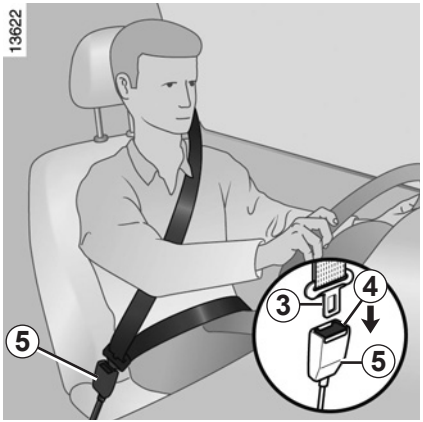

Locking

Unwind the belt **slowly and smoothly** and ensure that buckle ***3*** locks into catch ***5*** (check that it is locked by pulling on buckle ***3***).

If the belt jams, allow it to return slightly before attempting to unwind it again.

If your seat belt is completely jammed, pull slowly, but firmly, so that just over 3 cm unwinds. Allow it to return slightly before attempting to unwind it again.

If there is still a problem, contact an approved dealer.

Driver seat belt reminder warning light

This lights up if the driver's seat belt is not fastened and, when the vehicle reaches a speed of approximately 6 mph (10 km/h), it flashes and a beep sounds for approximately 2 minutes before the light returns to being continuously lit.

Unlocking

Press button ***4*** on buckle ***5*** and the seat belt will be rewound by the inertia reel.

Guide the buckle to help the operation.

– No modification may be made to the component parts of the restraint system (belts and seats and their mountings) fitted originally. For special operations (e.g. fitting child seats) contact an approved Dealer.

– Do not use devices which allow any slack in the belts (e.g. clothes pegs, clips, etc.): a seat belt which is worn too loosely may cause injury in the event of an accident.

– Never wear the shoulder strap under your arm or behind your back.

– Never use the same belt for more than one person and never hold a baby or child on your lap with your seat belt around them.

– The belt should never be twisted.

– Following an accident, have the seat belts checked and replaced if necessary. Always replace your seat belts as soon as they show any signs of wear.

– Make sure that the buckle is inserted into the appropriate catch.

– Ensure that no objects are placed in the area around the seat belt catch as they could prevent it from being properly secured.

– Make sure the seat belt catch is properly positioned (it should not be hidden away, crushed or flattened by people or objects).

METHODS OF RESTRAINT IN ADDITION TO THE FRONT SEAT BELTS (1/3)

Depending on the vehicle, they are composed of:

- **seat belt pretensioners;**
- **chest-level load limiters;**
- **air bags for driver and front passenger.**

These systems are designed to act independently or together when the vehicle is subjected to a frontal impact. Depending on the severity of the impact, the system can trigger:

- seat belt locking;
- the seat belt inertia reel pretensioner (which engages to correct seat belt slack);
- the front air bags.

Load limiter

Above a certain severity of impact, this mechanism is used to limit the force of the belt against the body so that it is at an acceptable level.

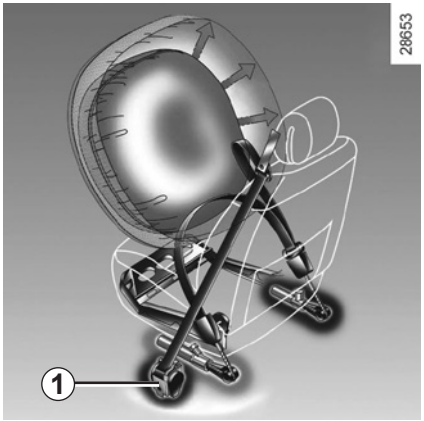

Pretensioners

The pretensioners hold the seat belt against the body, holding the occupant more securely against the seat, thus increasing the seat belt's efficiency.

With the ignition on, if the vehicle is subject to a significant frontal impact the system may, depending on the severity of the impact, trigger inertia reel pretensioner ***1*** on the front seats.

- Have the entire restraint system checked following an accident.
- No operation whatsoever is permitted on any part of the system (pretensioners, air bags, computers, wiring) and the system components must not be reused on any other vehicle, even if identical.
- To avoid incorrect triggering of the system which may cause injury, only qualified personnel from an approved dealer may work on the pretensioner and air bag system.
- The electric trigger system may only be tested by a specially trained technician using special equipment.
- When the vehicle is scrapped, contact an approved dealer for disposal of the pretensioner and air bag gas generators.

Air bags for driver and front passenger

Fitted to the driver and passenger side.

Depending on the vehicle, the presence of this equipment is indicated by the word “air bag” on the steering wheel and dashboard (air bag zone ***A***) and a symbol on the lower section of the windscreen.

Each air bag system consists of:

– an air bag and gas generator fitted on the steering wheel for the driver and in the dashboard for the front passenger;

– a shared computer, which includes the impact detector and the monitor controlling the electrical trigger system for each of the gas generators;

– a single indicator light on the instrument panel;

– remote sensors.

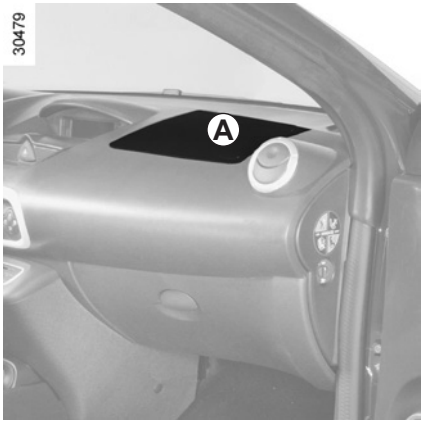

Operation

This system is only operational when the ignition is switched on.

In a severe **frontal** impact, the air bags inflate rapidly, cushioning the impact of the driver’s head and chest against the steering wheel and of the front passenger against the dashboard. The air bags then deflate immediately so that the passengers are not in any way hindered when leaving the vehicle.

The air bag system uses pyrotechnic principles. This explains why, when the air bag inflates, it will generate heat, produce smoke (this does not mean that a fire is about to start) and make a noise upon detonation. In a situation where an air bag is required, it will inflate immediately and this may cause some minor, superficial grazing to the skin or other problems.

METHODS OF RESTRAINT IN ADDITION TO THE FRONT SEAT BELTS (3/3)

All of the warnings below are given so that the air bag is not obstructed in any way when it is inflated and also to prevent the risk of serious injuries caused by items which may be dislodged when the air bag inflates.

Warnings concerning the driver's air bag

– Do not modify the steering wheel or the steering wheel boss.

– Do not cover the steering wheel boss under any circumstances.

– Do not attach any objects (badge, logo, clock, telephone holder, etc.) to the steering wheel boss.

– The steering wheel must not be removed (except by qualified personnel from our Network).

– When driving, do not sit too close to the steering wheel. Sit with your arms slightly bent (see the information on "Adjusting your driving position" in Section 1). This will allow sufficient space for the air bag to deploy correctly and be fully effective.

Warnings concerning the passenger air bag

– Do not attach or glue any objects (badge, logo, clock, telephone holder, etc.) to the dashboard on or near the air bag.

– Do not place anything between the dashboard and the passenger (pet, umbrella, walking stick, parcels, etc.).

– The passenger must not put his or her feet on the dashboard or seat as there is a risk that serious injuries may occur. In general, parts of the body should be kept away from the dashboard (knees, hands, head, etc.).

– The devices in addition to the front passenger seat belt should be reactivated as soon as a child seat is removed, to ensure the protection of the passenger in the event of an impact.

A REAR-FACING CHILD SEAT MUST NOT BE FITTED TO THE FRONT PASSENGER SEAT UNLESS THE ADDITIONAL RESTRAINT SYSTEMS, I.E. THE PASSENGER AIR BAG, ARE DEACTIVATED.

(refer to the information on "Child safety: deactivating/activating the front passenger air bag" in Section 1)

Side air bags

These air bags are fitted to the front seats and are activated at the sides of the seats (door side) to protect the occupants in the event of a severe side impact.

Depending on the vehicle, a marking on the windscreen informs you of the presence of additional means of restraint (air bags, pretensioners, etc.) in the passenger compartment.

These air bags operate through slits in the front seatbacks (door side): never insert any objects in these slits.

Warnings concerning the side air bag

– **Fitting seat covers:** seats equipped with an air bag require covers specifically designed for your vehicle. Contact an approved Dealer to find out if these covers are available. The use of any covers other than those designed for your vehicle (and including those designed for another vehicle) may affect the operation of the air bags and reduce your protection.

– Do not place any accessories, objects or even pets between the seatback, the door and the internal fittings. Do not cover the seatback with any items such as clothes or accessories. This may prevent the air bag from operating correctly or cause injury when the air bag is deployed.

– No work or modification whatsoever may be carried out on the seat or internal fittings, except by qualified personnel from an approved dealer.

ADDITIONAL METHODS OF RESTRAINT

All of the warnings below are given so that the air bag is not obstructed in any way when it is inflated and also to prevent the risk of serious injuries caused by items which may be dislodged when the air bag inflates.

The air bag is designed to complement the action of the seat belt. Both the air bags and seat belts are integral parts of the same protection system. It is therefore essential to wear seat belts at all times. If seat belts are not worn, the occupants are exposed to the risk of serious injury in the event of an accident. It may also increase the risk of minor superficial injuries occurring when the air bag is deployed, although such minor injuries are always possible with air bags.

If the vehicle should overturn or suffer a rear impact, however severe, the pre-tensioners and air bags are not always triggered. Shocks to the underbody of the vehicle, e.g. from pavements, potholes or stones, can all trigger these systems.

– No work or modification **whatsoever** may be carried out on any part of the air bag system (air bags, pretensioners, computer, wiring harness, etc.), except by qualified personnel from an approved dealer.

– To ensure that the system is in good working order and to avoid accidental triggering of the system which may cause injury, only qualified Network personnel may work on the air bag system.

– As a safety precaution, have the air bag system checked if your vehicle has been involved in an accident, or is stolen or broken into.

– When selling or lending the vehicle, inform the user of these points and hand over this driver's handbook with the vehicle.

– When scrapping your vehicle, contact your approved dealer for disposal of the gas generator(s).

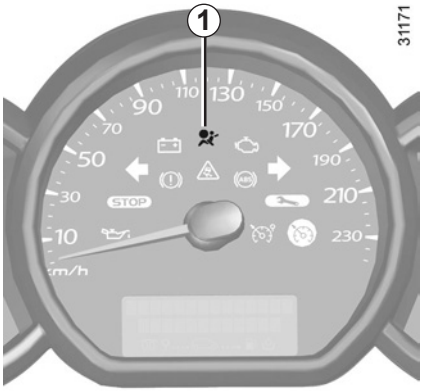

Operating faults

Warning light ***1*** will light up on the instrument panel when the ignition is turned on and then go out after a few seconds.

If it does not light up when the ignition is switched on, or lights up while the engine is running, there is a fault in the system (air bags, pretensioners etc.).

Contact your approved dealer as soon as possible. Your protection will be reduced until this fault is rectified.

Carrying children

Children, and adults, must be correctly seated and strapped in for all journeys. The children being carried in your vehicle are your responsibility.

A child is not a miniature adult. Children are at risk of specific injuries as their muscles and bones have not yet finished growing. The seat belt alone would not provide suitable protection. Use an approved child seat and ensure you use it correctly.

To prevent the doors being opened, use the “Child safety” device (refer to the information on “Opening and closing the doors” in Section 1).

A collision at 30 mph (50 km/h) is the same as falling a distance of 10 metres.
Transporting a child without a restraint is the equivalent of allowing him or her to play on a fourth-floor balcony without railings.
Never travel with a child held in your arms. In the event of an accident, you will not be able to keep hold of the child, even if you yourself are wearing a seat belt.
If your vehicle has been involved in a road accident, replace the child seat and have the seat belts checked.

Driver’s responsibility when parking or stopping the vehicle

Never leave an animal, child or adult who is not self-sufficient alone on your vehicle, even for a short time.

They may pose a risk to themselves or to others by starting the engine, activating equipment such as the electric windows or by locking the doors.

Also, in hot and/or sunny weather, please remember that the temperature inside the passenger compartment increases very quickly.

RISK OF DEATH OR SERIOUS INJURY.

Using a child seat

The level of protection offered by the child seat depends on its ability to restrain your child and on its installation. Incorrect installation compromises the protection it offers the child in the event of harsh braking or an impact.

Before purchasing a child seat, check that it complies with the regulations for the country you are in and that it can be fitted in your vehicle. Consult an approved dealer to find out which seats are recommended for your vehicle.

Before fitting a child seat, read the manual and respect its instructions. If you experience any difficulties during installation, contact the manufacturer of the equipment. Keep the instructions with the seat.

Set a good example by always fastening your seat belt and teaching your child:
- to strap themselves in correctly.
- to always get in and out of the car at the kerb, away from busy traffic.

Do not use a second-hand child seat or one without an instruction manual.

Check that there are no objects in the vicinity of the child seat which could impede its operation.

Never leave a child unattended in the vehicle.

Check that your child is always strapped in and that the belt or safety harness used is correctly set and adjusted. Avoid wearing bulky clothing which could cause the belts to slacken.

Never let your child put their head or arms out of the window.

Check that the child is in the correct position for the entire journey, especially if asleep.

Rear-facing child seats
A baby's head is, proportionally, heavier than that of an adult and its neck is very fragile. Transport the child in this position as long as possible (until the age of 2 at the very least). It supports both the head and the neck.
Choose a bucket type seat for best side protection and change it as soon as the child's head is higher than the shell.

Forward-facing child seats
The child's head and abdomen need to be protected as a priority. A forward-facing child seat which is firmly attached to the vehicle will reduce the risk of impact to the head. Ensure your child travels in a forward-facing seat with a harness or buckle for as long as their size permits. Choose a bucket type seat for optimum side protection.w

Booster cushions
From 15 kg or 4 years, the child can travel using a booster seat, which will enable the seat belt to be adapted to suit his size and shape. The booster seat cushion must be fitted with guides to position the seat belt on the child's thighs rather than the stomach. It is recommended that you use a seat-back which can be adjusted in terms of height to position the seat belt in the centre of the shoulder. It must never rest on the neck or on the arm.
Choose a bucket type seat for optimum side protection.

Attachment via the seat belt

The seat belt must be adjusted to ensure that it is effective in the event of harsh braking or an impact.

Ensure that the strap paths indicated by the child seat manufacturer are respected.

Always check that the seat belt is correctly fastened by pulling it up, then pulling it out fully whilst pressing on the child seat.

Check that the seat is correctly held by moving it from side to side and back to front: the seat should remain firmly fixed.

Check that the child seat has not been installed at an angle and that it is not resting against a window.

Do not use the child seat if it may unfasten the seat belt restraining it: the base of the seat must not rest on the buckle and/or catch of the seat belt.

The seat belt must never be twisted or the tension relieved. Never pass the shoulder strap under the arm or behind the back.
Check that the seat belt has not been damaged by sharp edges.
If the seat belt does not operate normally, it will not protect the child. Consult an approved dealer. Do not use this seat until the seat belt has been repaired.

No modifications may be made to the component parts of the restraint system (seat belts, seats and their mountings) originally fitted.

Some seats are not suitable for fitting child seats. The diagram on the following page shows you how to attach a child seat.

The types of child seats indicated may not be available. Before using a different child seat, check with the manufacturer that it can be fitted.

In the front seat

The laws concerning children travelling in the front passenger seat differ in every country. Consult the legislation in force and follow the indications on the diagram on the following page.

Before fitting a child seat in this seat (if authorised):

- **move the seat as far back as possible;**
- **on equipped vehicles, raise the seat base as far as possible;**
- gently tilt the seatback away from vertical (approximately 25°).

Do not change these settings after the child seat is installed.

RISK OF DEATH OR SERIOUS INJURY: before fitting a rear-facing child seat in this position, check that the air bag has been deactivated (refer to the information on “Child safety: deactivating/activating the front passenger air bag” in Section 1).

Children of a maximum height of 135 cm are permitted to occupy the front seat if the air bag is deactivated and a suitable restraint system is used. For passengers above this height, the air bag must remain active.

Check that when installing the child seat in the vehicle it is not at risk of coming loose from its base.

If you have to remove the headrest, check that it is correctly stored so that it does not come loose under harsh braking or impact.

Always attach the child seat to the vehicle even if it is not in use so that it does not come loose under harsh braking or impact.

31115

Check the status of the air bag before fitting a child seat or allowing a passenger to use the seat.

Seat not suitable for fitting child seats.

RISK OF DEATH OR SERIOUS INJURY: before fitting a rear-facing child seat in this position, check that the air bag has been deactivated (refer to the information on “Child safety: deactivating/activating the front passenger air bag” in Section 1).

Children are permitted to occupy the front seat if the air bag is deactivated and a suitable restraint system is used, up to a maximum height of 135 cm. For passengers above this height, the air bag must remain active.

Child seat attached using the belt

U Seat which allows a child seat with “Universal” approval to be attached by a seat belt.

Using a child safety system which is not approved for this vehicle will not correctly protect the baby or child. They risk serious or even fatal injury.

CHILD SAFETY: fitting a child seat (3/3)

The table below summarises the information already shown on the diagram on the previous page, to ensure the regulations in force are respected.

Type of child seat	Weight of the child	Passenger front seat (1) (2)
Carrycot fitted across the vehicle Group 0	< 10 kg	X
Rear-facing shell seat Group 0 or 0 +	< 13 kg	U
Rear-facing seat Groups 0 + and 1	< 13 kg and 9 to 18 kg	U
Forward-facing seat Group 1	9 kg to 18 kg	U
Booster cushion Group 2 or 3	15 kg to 25 kg and 22 to 36 kg	U

X = Seat not suitable for fitting child seats.

U = Seat which allows a child seat with “Universal” approval to be attached by seat belt; check that it can be fitted.

(**1**) Put the vehicle seat as far back and as high as possible.

(2) RISK OF DEATH OR SERIOUS INJURY: before fitting a rear-facing child seat in this position, check that the air bag has been deactivated (refer to the information on “Child safety: deactivating/activating the front passenger air bag” in Section 1).

Children are permitted to occupy the front seat if the air bag is deactivated and a suitable restraint system is used, up to a maximum height of 135 cm. For passengers above this height, the air bag must remain active.

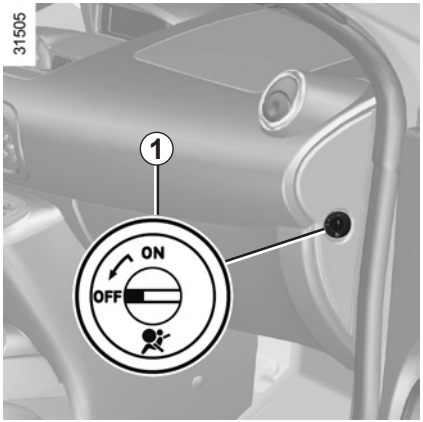

Deactivating the front passenger airbags
(on equipped vehicles)

In order to fit a child seat to the front passenger seat when this is allowed, you **must** deactivate the front passenger seat additional restraint devices (side airbags and, depending on vehicle, front airbags, etc.).

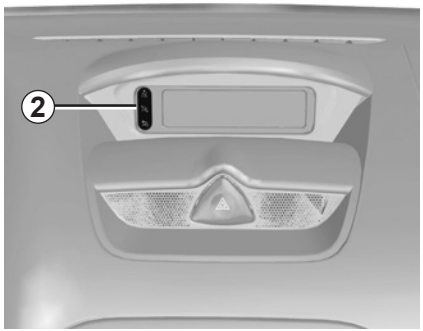

To deactivate the air bags: with the vehicle stationary, push and turn lock ***1*** to the OFF position.

With the ignition on, it is **essential** to check that warning light ***2*** is lit on the central display and, depending on the vehicle, that the message “PASSENGERAIRBAG OFF” is displayed.

This light remains permanently lit to let you know that you can fit a child seat.

DANGER

Since operation of the front passenger air bag is not compatible with the position of a rear-facing child seat, **NEVER** fit a rear-facing child seat on a front passenger seat with an active front air bag. The child may suffer very serious injuries if the air bag is triggered.

The passenger air bag must be activated or deactivated with the **ignition off**.

If it is interfered with when the vehicle is being driven, indicator lights and will come on.

Switch the ignition off then on again to reset the air bag in accordance with the lock.

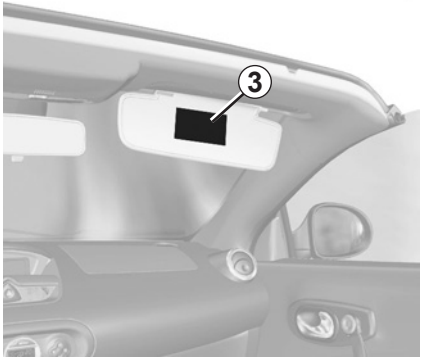

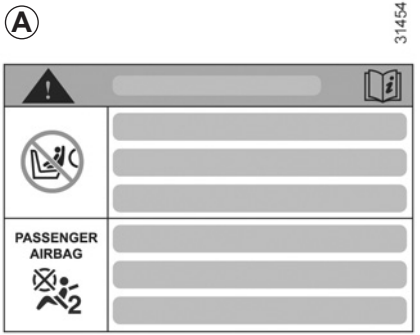

The markings on the dashboard and labels ***A*** on each side of passenger sun blind ***3*** (example: label shown above) remind you of these instructions.

DANGER

Since operation of the front passenger air bag is not compatible with the position of a rear-facing child seat, **NEVER** fit a rear-facing child seat on a front passenger seat with an active front air bag. The child may suffer very serious injuries if the air bag is triggered.

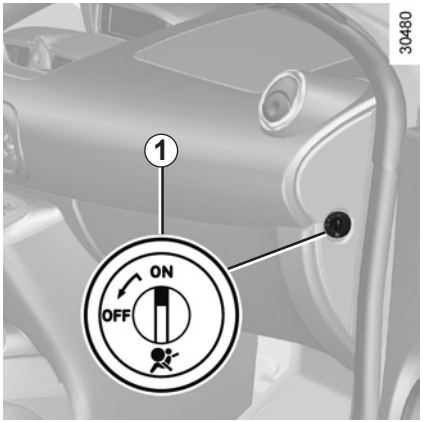

Activating the front passenger air bags

You should reactivate the air bag as soon as you remove the child seat from the front passenger seat to ensure the protection of the front passenger in the event of an impact.

To reactivate the air bags: when the vehicle is stationary, push and turn lock ***1*** to the ON position.

With the ignition on, you **must** ensure that warning light ***2*** is off.
The front passenger seat belt additional restraint systems are activated.

Operating faults

It is forbidden to fit a rear-facing child seat to the front passenger seat if the air bag activation/deactivation system is faulty.

Allowing any other passenger to sit in that seat is not recommended.

Contact your approved dealer as soon as possible.

The passenger air bag must be activated or deactivated with the **ignition off**.

If it is interfered with when the vehicle is being driven, indicator lights and will come on.

Switch the ignition off then on again to reset the air bag in accordance with the lock.

DRIVING POSITION: LEFT-HAND DRIVE (1/2)

31105

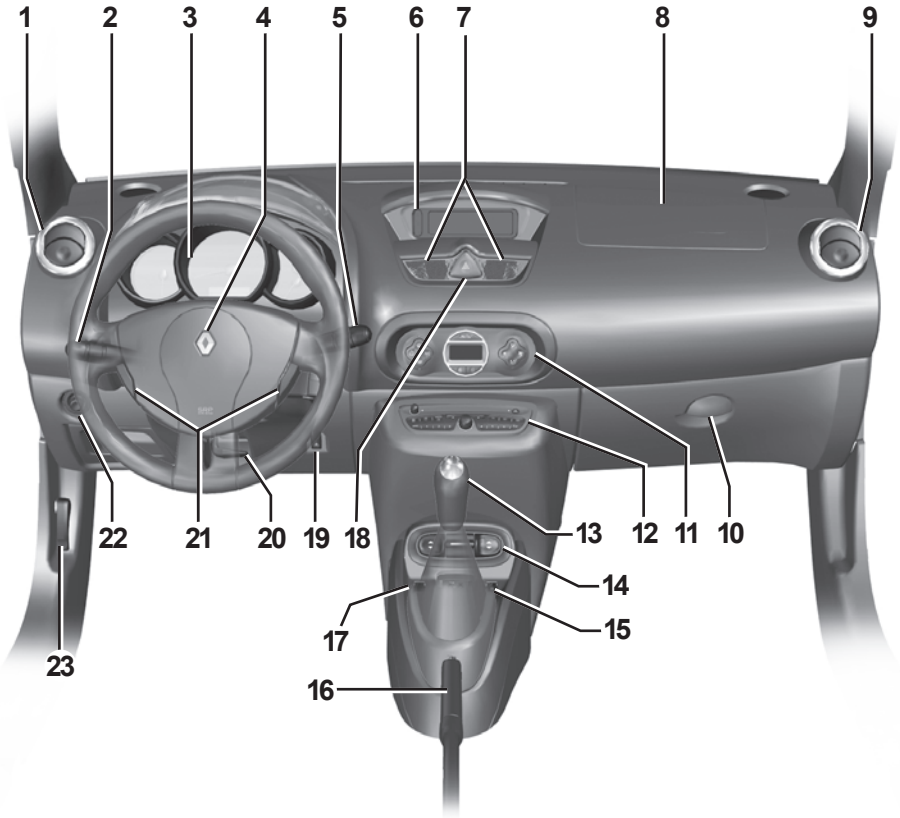

DRIVING POSITION: LEFT-HAND DRIVE (2/2)

The equipment fitted, described below, DEPENDS ON THE VERSION AND COUNTRY.

1 Side air vent.

2 Stalk for:

- direction indicator lights,
- exterior lights,
- front fog lights,
- rear fog light,
- horn.

3 Instrument panel.

4 Location for driver's air bag.

5 – Windscreen wash/wipe stalk.

– Trip computer information readout control and vehicle settings personalisation menu.

6 – Time, temperature, radio information display…

- Driver and front passenger seat belt unfastened and passenger air bag activated/deactivated warning lights

7 Centre air vents.

8 Location for passenger air bag.

9 Side air vent.

10 Storage compartment.

11 Heating and ventilation controls.

12 Location for radio or storage compartment.

13 Gear lever.

14 Electric window controls, rotating hard roof opening/closing control.

15 Central door locking/unlocking controls.

16 Handbrake.

17 Cruise control/speed limiter control.

18 Hazard warning lights switch.

19 Traction control system activation/deactivation controls.

20 Steering wheel height adjustment control.

21 Cruise control/speed limiter controls.

22 Door mirror adjustment control.

23 Bonnet release.

DRIVING POSITION: RIGHT-HAND DRIVE (1/2)

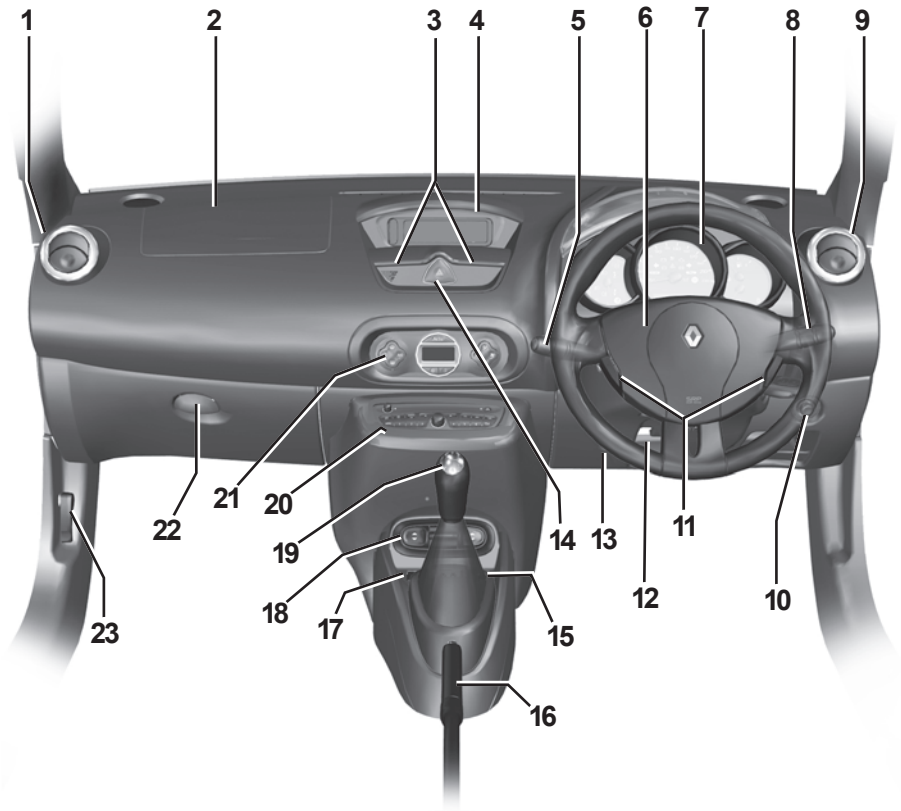

31187

DRIVING POSITION: RIGHT-HAND DRIVE (2/2)

The equipment fitted, described below, DEPENDS ON THE VERSION AND COUNTRY.

1 Side air vent.

2 Location for passenger air bag.

3 Centre air vents.

4 –
Time, temperature, radio information display…

– Driver and front passenger seat belt unfastened and passenger air bag activated/deactivated warning lights

5 Stalk for:

– direction indicator lights,

– exterior lights,

– front fog lights,

– rear fog light,

– horn.

6 Location for driver's air bag.

7 Instrument panel.

8 – Windscreen wash/wipe stalk.

–
Trip computer information readout control and vehicle settings personalisation menu.

9 Side air vent.

10 Door mirror adjustment control.

11 Cruise control/speed limiter controls.

12 Steering wheel height adjustment control.

13
Traction control system activation/deactivation controls.

14 Hazard warning lights switch.

15 Central door locking/unlocking controls.

16 Handbrake.

17 Central door locking/unlocking controls.

18 Electric window controls, rotating hard roof opening/closing control.

19 Gear lever.

20 Location for radio or storage compartment.

21 Heating and ventilation controls.

22 Storage compartment.

23 Bonnet release.

WARNING LIGHTS (1/4)

The presence and operation of the warning lights DEPEND ON THE EQUIPMENT AND COUNTRY.

Instrument panel *A*: you can adjust the brightness from the trip computer and warning system.

The warning light means you should **drive very carefully** to an approved Dealer as soon as possible. If you fail to follow this recommendation, you risk damaging your vehicle.

Low fuel level warning light

This comes on when the ignition is switched on and goes out after a few seconds. If it comes on when driving accompanied by a beep, fill up with fuel as soon as possible.

Air bag warning light

This lights up when the ignition is switched on and goes out after a few seconds.

If it remains lit or comes on when the engine is running, it indicates a system fault.

Contact your approved dealer as soon as possible.

Warning light STOP requires you to stop immediately, for your own safety, as soon as traffic conditions allow. Switch off the engine and do not restart it. Contact an approved Dealer.

Gear change indicator light

This light comes on to signal that an upshift is necessary.

Note: the engine speed at which the light flashes may vary depending on certain conditions (engine temperature, etc.).

If no lights or sounds are apparent, this indicates a fault in the instrument panel. This indicates that it is essential to stop immediately (as soon as traffic conditions allow). Ensure that the vehicle is correctly immobilised and contact an approved Dealer.

WARNING LIGHTS (2/4)

The presence and operation of the warning lights DEPEND ON THE EQUIPMENT AND COUNTRY.

Dipped beam headlight tell-tale

Main beam headlight tell-tale light

Front fog light tell-tale light

Rear fog light tell-tale light

Left-hand direction indicator tell-tale light

Right-hand direction indicator tell-tale light

Door status warning light

It lights up when the ignition is switched on and a door is open or not properly closed.

Speed limiter and cruise control indicator lights

See the information on the “Speed limiter” and “Cruise control” in Section 2.

Warning light

This lights up when the ignition is switched on and goes out after a few seconds. It may come on with other warning lights on the instrument panel.

If it lights up when the vehicle is being driven, it is advisable to stop at an approved dealer soon.

Warning light for monitoring exhaust gas

On equipped vehicles, the light comes on when the ignition is switched on then goes out.

– If it lights up continuously accompanied by the indicator light, consult an approved dealer as soon as possible;

– If it flashes, reduce the engine speed until the light stops flashing. Contact an approved dealer as soon as possible.

Refer to “Emission control, fuel economy and driving advice” in section 2.

WARNING LIGHTS (3/4)

The presence and operation of the warning lights DEPEND ON THE EQUIPMENT AND COUNTRY.

Anti-lock braking warning light

This lights up when the ignition is switched on and goes out after a few seconds.

If it does not go out after the ignition is switched on, or lights up when driving, there is a fault with the ABS. Braking will then be as normal, without the ABS system.

Contact an approved dealer as soon as possible.

STOP light

It switches off a few seconds after the ignition is switched on, if it does not light up, consult an approved dealer. It may light up at the same time as other warning lights, together with a beep. It indicates that it is essential to stop immediately (as soon as traffic conditions allow). Contact an approved dealer.

Battery charge warning light

This comes on when the ignition is switched on and goes out after a few seconds. If it comes on together with the STOP warning light and a beep, it indicates that the electrical circuit is overcharged or undercharged.

If it flashes on its own, this indicates that the battery is low. Stop as soon as traffic conditions allow and contact an approved dealer.

Handbrake “on” warning light and brake circuit incident warning light

If it comes on during braking and is accompanied by the STOP warning light and a beep, it indicates that the fluid level in the circuit is low or that there is a braking system fault. Stop as soon as traffic conditions allow and contact an approved dealer.

Oil pressure warning light

This lights up when the ignition is switched on and goes out after a few seconds.

If it comes on when you are driving accompanied by the STOP warning light and a beep, it is essential to stop and switch off the ignition.

Check the oil level. If the level is normal, the indicator light is being lit by something else.

Consult an approved dealer.

WARNING LIGHTS (4/4)

The presence and operation of the warning lights DEPEND ON THE EQUIPMENT AND COUNTRY.

Electronic Stability Program (ESP) and traction control (ASR) indicator light.

There are several reasons why the light may come on: refer to the information on the “Electronic stability program: ESP” and “traction control system: ASR” in Section 2.

Seat belt reminder light

If the driver’s seat belt is not fastened the light remains lit when the vehicle is started, then when the car reaches a speed of approximately 6 mph (10 km/h), it flashes and a beep sounds for approximately 2 minutes.

Central display *1*

seat belt reminder light.

passenger air bag deactivation warning light.

DISPLAYS AND INDICATORS (1/2)

The presence and operation of the display and indicators DEPENDS ON THE LEVEL OF EQUIPMENT AND THE COUNTRY.

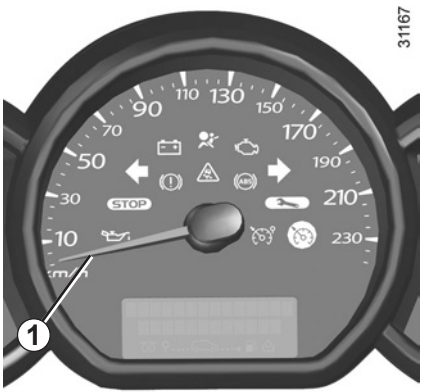

Speedometer *1*

(km or miles per hour).

Overspeed buzzer

Depending on the vehicle, a beep sounds for 10 seconds approximately every 40 seconds as long as the vehicle is travelling at over 72 miles per hour (120 km/h).

Note: depending on the vehicle, the desired speed may be programmed; consult an approved Dealer.

Rev counter *2*

(rpm x 1000)

DISPLAYS AND INDICATORS (2/2)

The presence and operation of the display and indicators DEPENDS ON THE LEVEL OF EQUIPMENT AND THE COUNTRY.

Fuel gauge *3*

The needle shows the fuel level. When it is at the minimum level, the fuel warning light comes on, accompanied by a beep.

Fill up as soon as possible.

Coolant temperature indicator *4*

In normal use, the needle should be positioned before zone ***A***. Under “intensive” operating conditions, the needle may approach this zone. This is not serious unless the STOP warning light comes on, accompanied by a message on the instrument panel and a beep.

Information display *5*

Depending on the vehicle, it includes:
- the time;
- the exterior temperature;
- radio information.

Trip computer and warning system *A*

This includes the following functions:

– distance travelled;

– instrument brightness;

– journey parameters;

– information messages;

– operating fault messages (associated with the warning light);

– warning messages (connected to the STOP warning light).

All these functions are described on the following pages.

General reset and trip mileage recorder reset key *1*

Press and hold button ***1*** to reset the trip mileage recorder. The display must be set to “Trip mileage recorder”.

Note: resetting is automatic when the maximum capacity of any of the memories is exceeded.

Selection key *1* on display *A*

Press button ***1*** to repeatedly to scroll through the following information:

a) total mileage and trip mileage recorder;

b) journey parameters:
   – fuel used;
   – average fuel consumption;
   – current fuel consumption;
   – estimated range;
   – distance travelled;
   – average speed;

c) oil change interval;

d) cruise control and speed limiter programmed speed;

e) dashboard and instrument panel brightness management;

f) trip log, operating faults and information message readout.

Refer to the tables on the following pages for display examples.

TRIP COMPUTER: trip settings (1/4)

The display of information shown below DEPENDS ON THE VEHICLE EQUIPMENT AND COUNTRY.

Examples of selections	Interpreting the display selected
37360 KM **7080 KM**	**a) Total mileage and trip mileage recorder**
FUEL USED 26.0 L	**b) Trip settings** **Fuel consumed** since the last reset.
AVERAGE 7.3 L/100	**Average fuel consumption** since the last reset. This value is displayed after driving 400 metres and takes into account the distance travelled and the fuel used since the last time the reset button was pressed.
CURRENT 8.6 L/100	**Current fuel consumption** This value is displayed after a speed of approximately 20 mph (30 km/h) is reached.

TRIP COMPUTER: trip settings (2/4)

The display of information shown below DEPENDS ON THE VEHICLE EQUIPMENT AND COUNTRY.

Examples of selections	Interpreting the display selected
RANGE 322 KM	**Estimated range with remaining fuel** This range takes into account the average fuel consumption since the last time the reset button was pressed. The value is displayed after driving 400 metres. Several minutes after the reserve light has come on (refer to the information on the “Instrument panel”), the estimated range will no longer be displayed.
DISTANCE 0.5 KM	**Distance travelled** since the last reset.
AVERAGE 78.9 KM/H	**Average speed** since the last reset. The value is displayed after driving 400 metres.

TRIP COMPUTER: trip settings (3/4)

The display of information shown below DEPENDS ON THE VEHICLE EQUIPMENT AND COUNTRY.

Examples of selections	Interpreting the display selected
OIL CHANGE DUE 13770 KM	**c) Oil change interval** Distance/time remaining until the next oil change (displayed in miles/kilometres and months), then when the service nears, several scenarios are possible: – distance/time remaining less than **900 miles (1,500 km)** or **one month**: depending on the vehicle, the message “SERVICE DUE SOON” is displayed; – distance/time remaining **0 miles/km** or **oil change date reached**: depending on the vehicle, the message “SERVICE DUE” is displayed when the selected display is “mileage before oil change”, accompanied by the symbol and the warning light. The vehicle requires an oil change as soon as possible.

NB: depending on the vehicle, the interval between oil changes varies according to the driving style (frequent driving at low speed, door-to-door journeys, extensive use at idle speed, towing a trailer etc.). The distance remaining until the next oil change can therefore decrease more quickly in some cases than the actual distance travelled.

The oil change intervals are independent of the vehicle’s maintenance schedule: please refer to your vehicle’s Maintenance Document.

Resetting: to reset the mileage before an oil change, with the display showing “oil change”, press and hold one of the display reset buttons for approximately 10 seconds until the display shows the interval permanently. Refer to the previous pages.

TRIP COMPUTER: trip settings (4/4)

The display of information shown below DEPENDS ON THE VEHICLE EQUIPMENT AND COUNTRY.

Examples of selections	Interpreting the display selected
BRIGHTNESS	**d) Dashboard and instrument panel brightness management.**
SPEED LIMITER 70 KM/H CRUISE CONTROL 70 KM/H	**e) Cruise control/speed limiter programmed speed.** Refer to the information on the “Cruise control/speed limiter” in Section 2.
NO MESSAGE AVAILABLE	**f) Trip log** Successive display: – information messages (automatic lighting, etc.), – operating fault messages (check the injection system, etc.).

TRIP COMPUTER AND WARNING SYSTEM: information messages

These can help in the vehicle starting phase, or give information about a selection or a driving status.
Examples of information messages are given in the following pages.

Examples of messages	Interpretation of messages
“ESP OFF”	Indicates that you have deactivated the ASR function.
“AUTO LIGHTS DEACTIVATED”	Indicates that the automatic lights function is deactivated.

TRIP COMPUTER: operating fault messages

These appear with the warning light and mean that you should drive very carefully to an authorised dealer as soon as possible. If you fail to follow this recommendation, you risk damaging your vehicle.

They disappear when the display selection key is pressed or after several seconds and are stored in the computer log. The warning light stays on. Examples of operating fault messages are given on the following pages.

Examples of messages	Interpretation of messages
“CHECK ESP”	Indicates a fault with the traction control system (refer to the information on the “Traction control system: ASR ” in Section 2).
“CHECK AUTO LIGHTS”	Indicates an automatic lighting operating fault; contact an approved Dealer.

TRIP COMPUTER : warning messages

These appear with the STOP warning light and require you to stop immediately, for your own safety, as soon as traffic conditions allow. Stop your engine and do not restart it. Contact an approved Dealer.

Examples of warning messages are given in the following pages. **Note:** the messages appear on the display either individually or alternately (when there are several messages to be displayed), and may be accompanied by a warning light and/or a beep.

Examples of messages	Interpretation of messages
“INJECTION FAULT”	Indicates that the vehicle has a serious engine fault.
“STEERING FAULT”	Indicates a fault in the vehicle’s power-assisted steering.
“LOW BATTERY”	Indicates a fault with the battery charging circuit.
“BRAKING FAULT”	Indicates a fault in the braking circuit.
“OIL PRESSURE FAULT”	Indicates an oil pressure fault.
“ENGINE OVERHEATING”	Indicates that the engine is overheating.

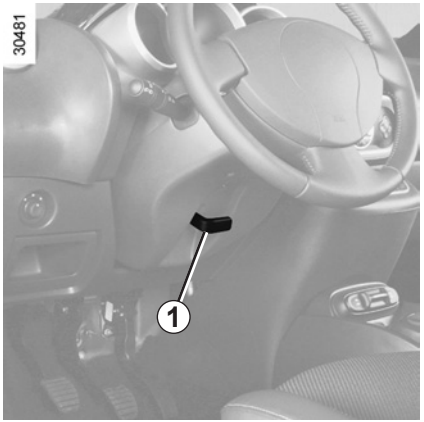

Adjusting the steering wheel

Depending on the vehicle, the steering wheel position is adjustable.

Hold the steering wheel with one hand, lift lever ***1*** and position the steering wheel as desired. Lower the lever to lock the steering wheel.

Make sure that the steering wheel is correctly locked.

For safety reasons, only adjust the steering wheel when the vehicle is stationary.

Power-assisted steering

Variable power-assisted steering

The variable power-assisted steering system is equipped with an electronic control system which alters the level of assistance to suit the vehicle speed.

Steering is made easier during parking manoeuvres (for added comfort) whilst the force needed to steer increases progressively as the speed rises (for enhanced safety at high speeds).

Never leave the steering wheel at full lock while stationary.

Operating faults

The steering may become stiff when driving or when the steering wheel is turned repeatedly. This is due to the power assistance overheating. In this case, it must be allowed to cool down.

With the engine switched off, or if there is a system fault, it is still possible to turn the steering wheel. The force required will be greater.

Never switch off the ignition when travelling downhill, and avoid doing so in normal driving (assistance is not provided).

Display *A*

With the ignition on, the clock and the exterior temperature are displayed.

For your safety, we recommend that you do not adjust the clock while driving.

Resetting the clock

With the ignition on, press button:

1 for the hours;

2 for the minutes.

Note: for vehicles not fitted with buttons ***1*** and ***2***, refer to the instructions for the specific equipment (radio, etc.) to discover the special features.

If the power supply is cut (battery disconnected, supply wire cut, etc.), the clock must be reset.

We recommend that you do not adjust these settings while driving.

External temperature indicator

Special note:

When the external temperature is between –3°C and +3°C, the °C characters flash (indicates risk of ice formation).

External temperature indicator

As ice formation is related to climatic exposure, local air humidity and temperature, the external temperature alone is not sufficient to detect ice.

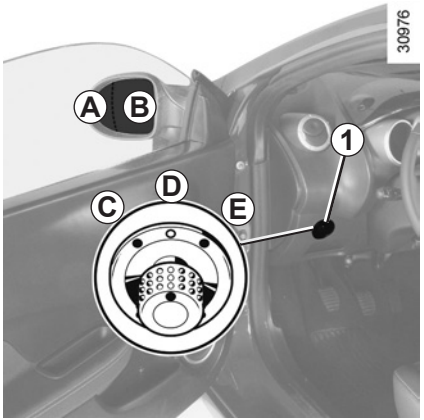

Door mirrors with electrical adjustment:

With the ignition on, move button ***1***:
- position ***C*** to adjust the left-hand door mirror;
- position ***E*** to adjust the right-hand door mirror;

D is the inactive position.

Heated door mirrors
(depending on vehicle)

The door mirrors are de-iced when the rear screen demisting/de-icing is active.

The door mirror on the driver's side has two clearly defined zones. Zone ***B*** shows what can normally be seen in an ordinary rear view mirror. For your safety, zone ***A*** increases the area you can see at the rear and to the side of your vehicle.

The objects in zone *A* look much further away than they really are.

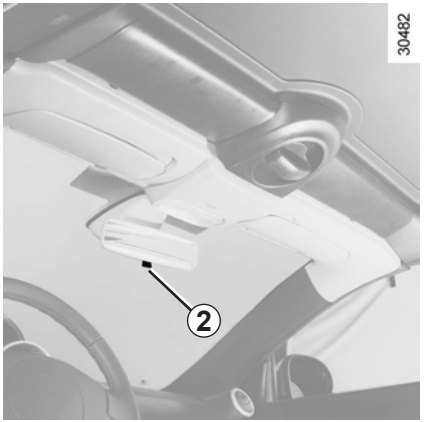

Interior rear view mirror

Its position can be adjusted. When driving at night, to avoid being dazzled by the headlights of the vehicle behind, depress the little lever ***2*** located behind rear view mirror.

For safety reasons, carry out any adjustments when the vehicle is not being driven.

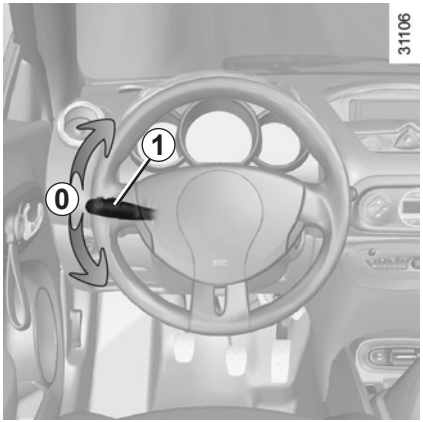

Direction indicators

Move stalk ***1*** parallel to the steering wheel and in the direction you are going to turn it.

When driving on the motorway, the steering wheel is not often turned enough to return the stalk automatically to ***0***. There is an intermediate position in which the stalk may be held when changing lanes.

When the stalk is released, it automatically returns to ***0***.

Horn

Press the end of the stalk ***1***.

Headlight flasher

Pull stalk ***1*** towards you to flash the headlights.

Hazard warning lights

Press switch ***2***.

This switch activates all four direction indicators and the side indicator lights simultaneously. It must only be used in an emergency to warn other drivers that you have had to stop in an area where stopping is prohibited or unexpected, or that you are obliged to drive under special conditions.

Depending on the vehicle, the hazard warning lights may come on automatically under deliberate heavy deceleration. You can switch them off by pressing switch ***2***.

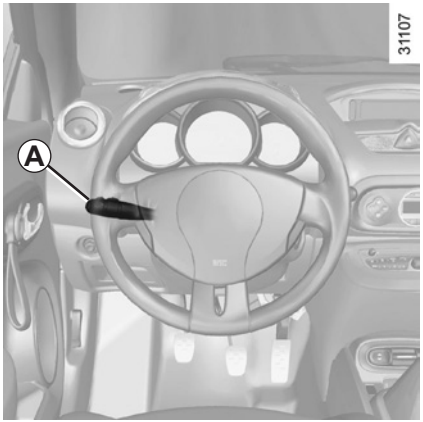

Side lights

Turn end ***1*** of stalk ***A*** until the symbol is opposite mark ***2***.

The instrument panel will light up.

Dipped beam headlights

Manual operation

Turn end ***1*** of stalk ***A*** until the symbol is opposite mark ***2***.

An indicator light on the instrument panel will come on.

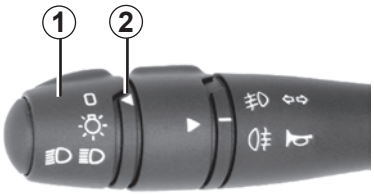

Automatic operation

With the engine running on vehicles fitted with a **light sensor**, the dipped beam headlights come on automatically as light begins to fade; the stalk does not need to be turned (position **0**).

To deactivate or reactivate this function, move end ***1*** of stalk ***A*** twice consecutively from **0** to the side lights position, with the vehicle stopped and the ignition on.

A bleep confirms the deactivation of this function, and two bleeps confirm its reactivation.

Main beam headlights

With the dipped headlights lit, pull stalk ***A*** towards you. An indicator light on the instrument panel will come on.

To return to the dipped headlights position, pull stalk ***A*** towards you again.

Switching off the lights

Return the stalk to its original position.

Lights-on warning buzzer

If the lights are on after the engine is switched off, a warning beep sounds when the driver's door is opened to warn you that the lights are still on.

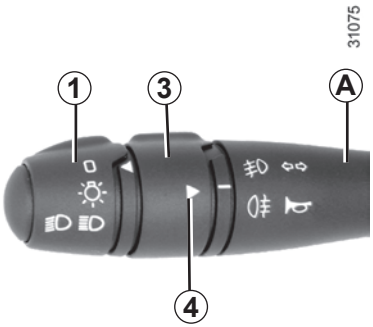

Front fog lights

Turn centre ring ***3*** on stalk ***A*** until the symbol faces mark ***4***, then release it.

Operation of the fog lights depends on the exterior lighting position selected, and an indicator light will light up on the instrument panel.

Rear fog lights

Turn centre ring ***3*** on stalk ***A*** until the symbol faces mark ***4***, then release it.

Operation of the fog lights depends on the exterior lighting selected, and an indicator light will light up on the instrument panel.

To avoid inconveniencing other road users, remember to switch off the rear fog light when it is no longer needed.

When driving in fog or snow, or when transporting objects which are higher than the roof, the headlights do not come on automatically.

Switching on the fog lights remains the responsibility of the driver: the indicator lights on the instrument panel inform you whether the fog lights are lit (indicator light on) or not (indicator light not on).

Turning off the fog lights

Turn ring ***3*** again until mark ***4*** is opposite the symbol for the fog light that you wish to switch off. The corresponding indicator light on the instrument panel goes out.

The front and rear fog lights switch off when the exterior lights are switched off.

Special case

The front and rear fog lights do not operate in automatic mode.

They only come on when the end of ring ***4*** is in position or .

Before driving at night: check that the electrical equipment is in good condition. As a general precaution, check that the lights are not obscured (by dirt, mud, snow or objects which could cover them).

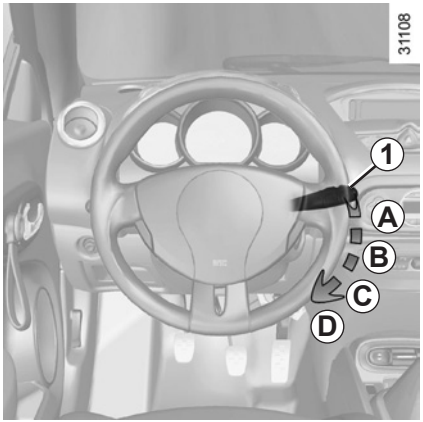

Windscreen wiper

With the ignition on, move stalk ***1***:

A **park**

B **intermittent wiping**

The wipers will pause for several seconds between sweeps. Depending on the vehicle, it is possible to change the time between sweeps by turning ring ***2***.

C **normal wiping speed**

D **fast wiping speed**

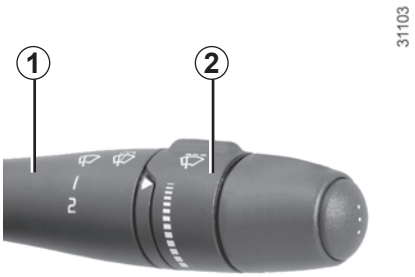

Special note

When driving every time the vehicle stops, the wipers slow down, e.g. fast wiping speed is reduced to normal wiping speed.

As soon as the vehicle moves off, wiping will return to the speed originally selected.

Any action on stalk ***1*** overrides and cancels automatic operation.

Vehicles with automatic wiper function

With the engine running, move stalk ***1***:

A **park**

B **automatic wiper function**

When this position is selected, the system detects the presence of water on the windscreen and triggers wiping at a suitable wiping speed. It is possible to change the time between sweeps by turning ring ***2***.

C **normal wiping speed**

D **fast wiping speed**

With the vehicle stationary, if for any reason the wipers cannot move (e.g. stuck to windscreen by ice), the system will automatically cut off the power supply to the wipers.

Windscreen washer

With the ignition on, pull stalk ***1*** towards you.

A short pull triggers one sweep cycle of the wiper. A longer pull triggers three sweeps followed by a final sweep after several seconds.

In snowy or icy conditions, make sure the wiper blades are not stuck by ice.

Keep an eye on the condition of the blades. Replace the wiper blades as soon as they begin to lose efficiency (approximately once a year).

Check the condition of the wiper blades. You are responsible for their service life:

– they must remain clean: clean the blades and the windscreen regularly with soapy water;

– do not use them when the windscreen is dry;

– free them from the windscreen when they have not been used for a long time.

In all cases, replace them as soon as they begin to lose efficiency: approximately once a year.

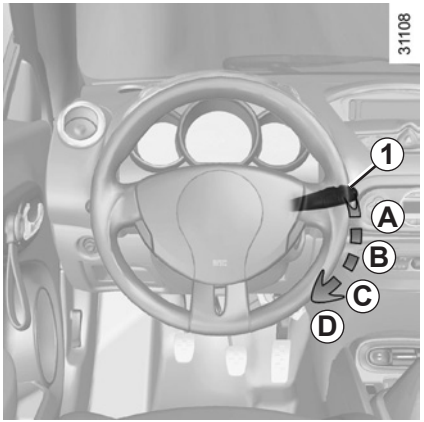

When working in the engine compartment, ensure that the windscreen wiper stalk is in position **A** (park).

Risk of injury.

Before any action involving the windscreen (washing the vehicle, de-icing, cleaning the windscreen, etc.) return stalk ***1*** to position **A** (park).

Risk of injury and/or damage.

Capacity of the fuel tank: 40 litres approximately.

To open the compartment, place your finger into recess ***2***, then pull the cover.

For details on filling the fuel tank, refer to the information on “Filling with fuel” on the next page.

Cap holder ***1*** is provided on the fuel filler flap for holding the cap when the tank is being filled.

Fuel grade

Use a high grade fuel with the appropriate octane rating as defined by the particular standards in force in your country.

It is **essential** to use unleaded petrol. The octane rating (RON) must conform with the specifications given on the label inside fuel filler flap ***A***. Refer to the information on “Engine specifications” in Section 6.

Fuel filler cap: this is specific to the vehicle type. If you have to replace it, make sure the new cap is of the same type. Contact an approved Dealer.

Never place the cap near a source of heat or flame.

Do not wash the filler area with a high-pressure washer.

Filling with fuel

Using leaded petrol will damage the antipollution system and may lead to a loss of warranty.

To ensure the fuel tank is not filled with leaded petrol, the fuel tank filler neck contains a restrictor fitted with a valve which **only allows the nozzle for unleaded petrol to be used** (at the pump).

– Insert the nozzle **as far as it will go** so that the valve is opened.

– Keep the nozzle in this position throughout the entire filling operation.

When the pump cuts out automatically at the end of the filling procedure, a maximum of two further filling attempts may be made, as there must be sufficient space in the fuel tank to allow for expansion.

After filling, check that the cap and cover are closed.

Do not mix even small amounts of petrol (unleaded or E85) with diesel.
Do not use ethanol-based fuel if your vehicle is not compatible with this fuel.
Do not add additive to the fuel – otherwise you risk damaging the engine.

Persistent smell of fuel

If you notice a persistent smell of fuel you should:

– stop the vehicle as soon as traffic conditions allow and switch off the ignition;
– switch on the hazard warning lights and ask your passengers to leave the vehicle and to keep away from the traffic;
– contact an approved dealer.

No modifications whatsoever are permitted on any part of the fuel supply system (computers, wiring, fuel circuit, injector, protection covers, etc.) as this may be dangerous (such work must be undertaken by qualified Network personnel).

Section 2: Driving

(Advice on use relating to fuel economy and the environment)

Running in 2.2
Ignition switch 2.2
Starting, stopping the engine. 2.3
Special features of petrol versions 2.4
Gear lever 2.5
Handbrake. 2.5
Advice on emission control and fuel economy 2.6
Environment 2.9
Driver correction devices and aids 2.10
Speed limiter 2.13
Cruise control 2.16

RUNNING IN/IGNITION SWITCH

Up to **600 miles (1,000 km)**, do not exceed 78 mph (130 km/h) in top gear or 3,000 to 3,500 rpm.

You may only expect top performance from your vehicle after approximately **1,800 miles** (3 000 km).

Service intervals: please refer to your vehicle's Maintenance Document.

"Off and steering locked" position St

To lock: remove the key and turn the steering wheel until the steering column locks.

To unlock: turn the key and the steering wheel slightly.

"Accessories" position A

When the ignition is switched off, any accessories (radio, etc.) will continue to function.

"Ignition" position M

The ignition is on and the engine can be started.

"Start" position D

If the engine fails to start at the first attempt, turn the key back before activating the starter again. Release the key as soon as the engine starts.

Starting the engine

Engine warm or cold:

– Turn the ignition key to “Start” position **D** without accelerating;

– release the key as soon as the engine starts.

Special note: if starting the engine when the outdoor temperature is very low (below - 10 ° C): hold down the clutch pedal until the engine starts.

Stopping the engine

With the engine idling, turn the key back to “Stop” position **St**.

Driver’s responsibility

Never leave your vehicle with the key or remote control inside the vehicle and never leave a child (or a pet) unsupervised, even for a short while.

There is a risk that they could start the engine or operate electrical equipment (electric windows etc.) and trap part of their body (neck, arms, hands, etc.).
Risk of serious injury.

Never switch off the ignition before the vehicle has stopped completely. Once the engine has stopped, the brake servo, power-assisted steering, etc., and the passive safety devices such as air bags and pretensioners will no longer operate.

The steering is locked when the key is removed.

The following operating conditions:

– driving for long periods when the low fuel level warning light is lit;
– using leaded petrol;
– using fuel or lubrication additives which are not approved.

Or operating faults such as:

– faulty ignition system, running out of fuel or disconnected spark plugs resulting in the engine misfiring or cutting out when driving;
– loss of power,

as they may cause the catalytic converter to overheat and thus reduce its efficiency, **or damage it irreparably and cause heat damage to the vehicle**.

If you notice any of the above operating faults, have the necessary repairs carried out as soon as possible by an approved Dealer.

These faults may be avoided by regularly taking your vehicle to an approved Dealer at the intervals specified in the Maintenance Service Booklet.

Starting problems

To avoid damaging the catalytic converter, **do not keep** trying to start the engine (using the start button, or by pushing or towing the vehicle) **without having identified and corrected the starting fault**.

If the fault cannot be identified, do not keep trying to start the engine, but contact an approved Dealer.

Do not park the vehicle or run the engine in locations where combustible substances or materials such as grass or leaves can come into contact with the hot exhaust system.

Gear lever

Selecting reverse gear

With the vehicle stationary, move the gear lever into neutral then into reverse.

Follow the grid shown on knob ***1***.

The reversing lights will come on as soon as reverse gear is selected (with the ignition on).

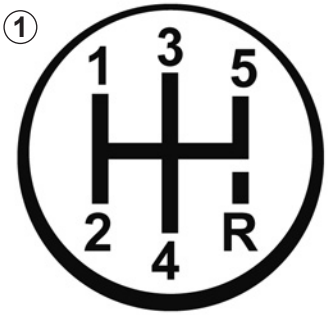

An impact to the underside of the vehicle when reversing (e.g. striking a raised kerb) may result in damage to the vehicle (eg. deformation of the rear axle).

To avoid any risk of accident, have your vehicle checked by an approved Dealer.

Handbrake

To release:

Pull lever ***2*** up slightly, press button ***3*** and then lower the lever to the floor.

To apply:

Pull the lever ***2*** upwards and make sure the vehicle is immobilised.

Make sure that the handbrake is properly released when driving (red indicator light off), otherwise overheating may occur.

Depending on the gradient and/or vehicle load, it may be necessary when stationary to apply the brake by at least a further two notches and engage a gear (1st or reverse gear).

ADVICE: antipollution, fuel economy and driving (1/3)

By virtue of its design, moderate fuel consumption and initial settings, your vehicle conforms to current antipollution regulations. The manufacturer is actively striving to reduce pollutant exhaust gas emissions and to save energy. But the fuel consumption of your vehicle and the level of pollutant exhaust gas emissions are also your responsibility. Ensure that it is maintained and used correctly.

Maintenance

It is important to remember that failure to respect antipollution regulations could lead to legal action being taken against the vehicle owner. In addition, replacing engine, fuel supply system and exhaust components with parts other than those originally recommended by the manufacturer may alter your vehicle so that it no longer complies with antipollution regulations.

Have your vehicle adjusted and checked by an approved Dealer, in accordance with the instructions given in your maintenance schedule: they will have all the equipment necessary for ensuring that your vehicle is maintained to its original standard.

Engine adjustments

– **ignition:** this does not require adjustment.

– **spark plugs:** for optimum fuel economy, efficiency and performance the specifications laid down by our Design Department must be strictly applied.

  If the spark plugs have to be changed, use the make, type and gap specified for your vehicle's engine. Contact an approved dealer for this.

– **idle:** this does not require adjustment.

– **air filter:** a choked element will reduce efficiency. It must be replaced.

Exhaust gas monitoring system

The exhaust gas monitoring system will detect any operating faults in the vehicle's antipollution system.

If this system malfunctions, toxic substances may be released into the atmosphere or damage may occur.

This warning light on the instrument panel will indicate if there are any faults in the system:
This lights up when the ignition is switched on and goes out when the engine is started.

– If it lights up continuously, consult your approved dealer as soon as possible;
– if it flashes, reduce the engine speed until the light stops flashing. Contact your approved dealer as soon as possible.

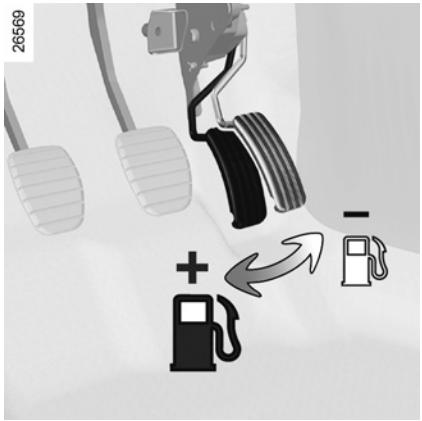

Driving

– Drive carefully for the first few miles until the engine reaches its normal operating temperature, rather than let it warm up while the vehicle is stationary.
– Speed is expensive.
– Sporty driving uses a lot of fuel: drive with a light right foot.
– Do not overrev the engine in the intermediate gears.
  Always use the highest gear possible without labouring the engine.
– Avoid sudden acceleration.
– Brake as little as possible. If you anticipate an obstacle or bend in advance, you may then simply release the accelerator pedal.
– Do not try to maintain the same speed up a hill, accelerate no more than you would on the level. Keep your foot in the same position on the accelerator pedal.
– Double declutching and accelerating before switching off are unnecessary in modern vehicles.
– Bad weather, flooded roads:

Do not drive through floods if the depth of water is above the lower edge of the wheel rims.

Obstructions to the driver
On the driver's side, only use mats adapted to the vehicle that attach to the pre-installed parts, and regularly check their mounting. Do not place several mats on top of each other.
Risk of pedals jamming

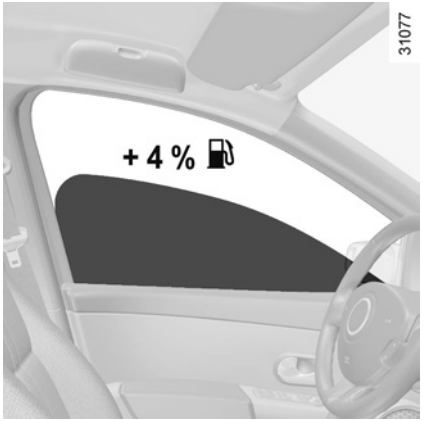

Advice on use

– Electricity is fuel; switch off all the electrical components which are not really needed. **However** (safety first), keep your lights on when the visibility is bad (“see and be seen”).

– Use the air vents. Driving with the windows open at 60 mph (100 km/h) will increase fuel con-sumption by 4%.

– **For vehicles fitted with air conditioning**, it is normal to observe an increase in fuel consumption (especially in city conditions) when it is used. For vehicles fitted with manual air conditioning, switch off the system when it is not required.

Advice for reducing consumption and therefore helping to preserve the environment:
Drive with the air vents open and the windows closed.

If the vehicle has been parked in the sun, open the doors for a few moments to let the hot air escape before starting the engine.

– Never fill the fuel tank right to the brim to avoid overflow.

– Avoid using the vehicle for door-to-door calls (short journeys with long waits in between) because the engine never reaches its normal operating temperature.

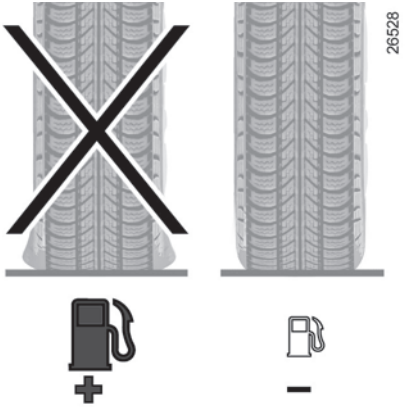

Tyres

– An under-inflated tyre increases fuel consumption.

– The use of non-recommended tyres can increase fuel consumption.

ENVIRONMENT

Your vehicle has been designed with respect for the **environment** in mind for its entire service life: during production, use and at the end of its life.
This commitment is illustrated by the of the manufacturer eco² signature.

Manufacture

Your vehicle has been manufactured at a factory which complies with a policy to reduce the environmental impact on the surrounding areas (reduction of water and energy consumption, visual and noise pollution, atmospheric emissions and waste water; sorting and re-using waste).

Emissions

Your vehicle has been designed to emit fewer greenhouse gases (CO2) while in use, and therefore to consume less fuel (eg. 140 g/km, equivalent to 5.3 l/100 km for a diesel vehicle).

Our vehicles are also equipped with a particle filter system including a catalytic converter, an oxygen sensor and an active carbon filter (the latter prevents vapour from the fuel tank being released into the open air).

For certain diesel vehicles, this system also has a particle filter to reduce the volume of soot particles emitted.

Please make your own contribution towards protecting the environment too

– Worn parts replaced in the course of routine vehicle maintenance (vehicle battery, oil filter, air filter, batteries, etc.) and oil containers (empty or filled with used oil) must be disposed of through specialist organisations.
– At the end of the vehicle's service life, it should be sent to approved centres to ensure that it is recycled.
– In all cases, comply with local legislation.

Recycling

Your vehicle is 85% recyclable and 95% recoverable.

To achieve these objectives, many of the vehicle components have been designed to enable them to be recycled. The materials and structures have been carefully designed to allow these components to be easily removed and reprocessed by specialist companies.

In order to preserve raw material resources, this vehicle incorporates numerous parts made from recycled plastics or renewable materials (vegetable or animal-derived materials such as cotton or wool).

Depending on the vehicle, this is composed of:

- **the (ABS) (anti-lock braking system);**
- **the electronic stability program (ESP) with understeer control and traction control (ASR);**
- **emergency brake assist.**

These functions are an additional aid in the event of critical driving conditions, enabling the vehicle behaviour to be adapted to suit the driving conditions.

However, the functions do not take the place of the driver. **They do not increase the vehicle's limits and should not encourage you to drive more quickly.** Therefore, they can under no circumstances replace the vigilance or responsibility of the driver when manoeuvring the vehicle (the driver must always be ready for sudden incidents which may occur when driving).

ABS (anti-lock braking system)

Under heavy braking, the ABS prevents the wheels from locking, allowing the stopping distance to be managed and keeping control of the vehicle.

Under these circumstances, the vehicle can be steered to avoid an obstacle whilst braking. In addition, this system can increase stopping distances, particularly on roads with low surface grip (wet ground etc.).

You will feel a pulsation through the brake pedal each time the system is activated. The ABS does not in any way improve the vehicle's physical performance relating to the road surface and roadholding. It is still **essential** to follow the rules of good driving practice (such as driving at a safe distance from the vehicle in front etc.).

In an emergency, apply **firm and continuous pressure** to the brake pedal. There is no need to pump it repeatedly. The ABS will modulate the force applied in the braking system.

Operating faults:

- If the ABS and indicator lights on the instrument panel come on, **braking is still operational but without ABS**;
- If the ABS, STOP, and indicator lights on the instrument panel come on when driving, this indicates a fault with the braking and **ABS** systems.

In both cases, consult an approved Dealer.

Your braking systems are partially operational. However, it is **dangerous to brake suddenly** and it is essential to stop immediately, as soon as traffic conditions allow. Contact an approved dealer.

Electronic stability program (ESP) with understeer control and traction control (ASR)

Indicator light *1* on the instrument panel flashes when the function starts operating.

Electronic stability program ESP

This system helps you to keep control of the vehicle in critical driving conditions (avoiding an obstacle, loss of grip on a bend, etc.).

Operating principle

A sensor in the steering wheel detects the direction selected by the driver.

Other sensors throughout the vehicle measure the actual direction.

The system compares the direction selected by the driver and the actual direction of the vehicle and corrects this as necessary by applying the brakes selectively and/or acting on the engine power.

Understeer control

This system optimises the action of the ESP in the case of pronounced understeering (loss of front axle road holding).

Traction control (ASR)

This system helps to limit wheelspin of the drive wheels and to control the vehicle when pulling away accelerating or decelerating.

Operating principle

Using the wheel sensors, the system measures and compares the speed of the drive wheels at all times and slows down their over-rotation. If a wheel is starting to slip, the system brakes automatically until the drive supplied becomes compatible with the level of grip under the wheel again.

The system also adjusts the engine speed to the grip available under the wheels, independently of the pressure exerted on the accelerator pedal.

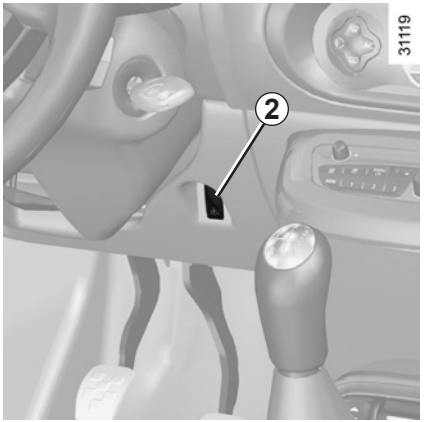

Disabling the function

The function is deactivated by pressing switch ***2*** and indicator light ***1*** lights up on the instrument panel. This action also deactivates the traction control.

The E.S.P. offers additional safety, it is recommended that you do not drive with the function disabled. Correct this by pressing switch ***2*** again.

The E.S.P. is automatically reactivated when the ignition is switched on.

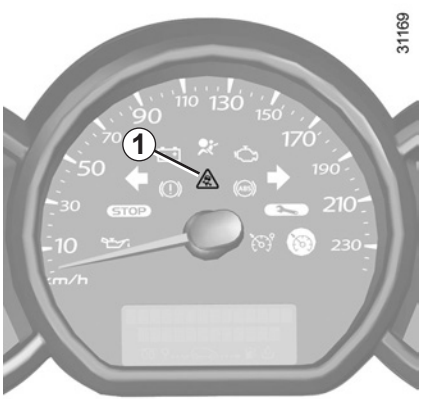

Operating faults

When the system detects an operating fault, the and warning lights on the instrument panel come on.

Consult an approved dealer.

Emergency brake assist

This is an additional system to ABS which helps reduce vehicle stopping distances.

Operating principle

The system detects an emergency braking situation. In this case, the braking assistance immediately develops maximum power and may trigger ABS regulation.

ABS braking is maintained as long as the brake pedal is not released.

Hazard warning lights switching on

Depending on the vehicle, these may light up in the event of sudden deceleration.

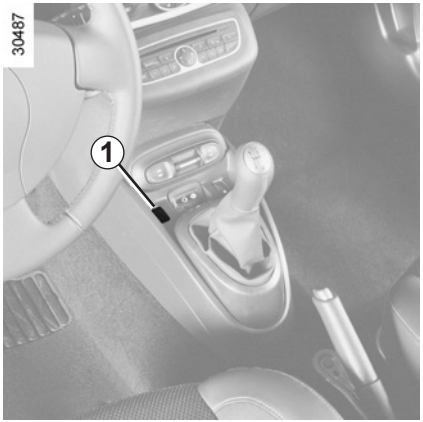

The speed limiter function helps you stay within the driving speed limit that you choose, known as the **limit speed**.

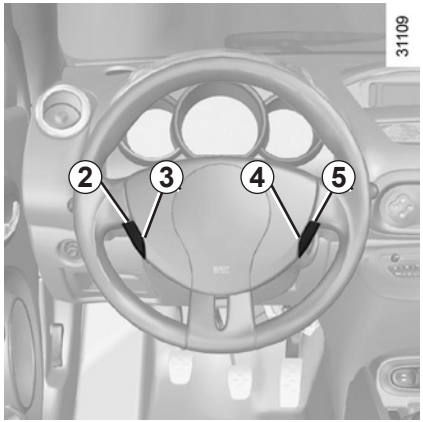

Controls

1 Main “On/Off” switch.

2 Limit speed activation, storage and increase switch (+).

3 Limit speed activation, storage and decrease switch (-).

4 Switch the function to standby, with limit speed stored (O).

5 Stored limit speed activation, storage and recall (R).

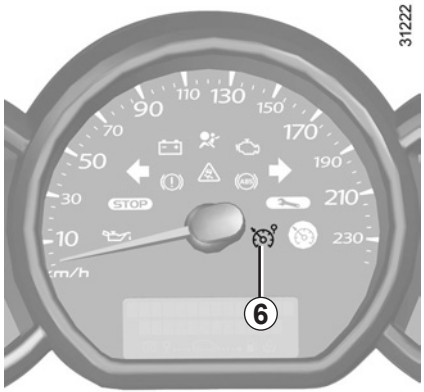

Switching on

Press switch ***1*** on the side showing . Indicator light ***6*** comes on, lit orange, and the message “SPEED LIMITER” appears on the instrument panel, accompanied by dashes to indicate that the speed limiter function is activated and waiting to memorise a limit speed.
To memorise the current speed, press switch ***2*** (+): the minimum speed which can be memorised is 20 mph (30 km/h).

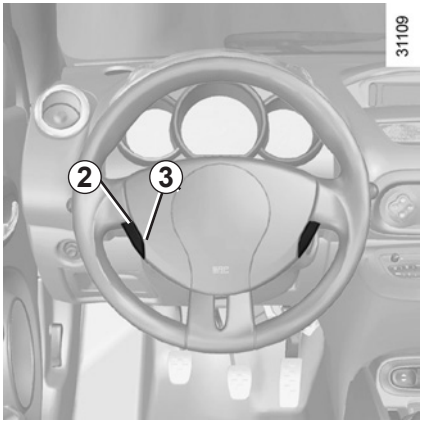

Driving

When a limited speed has been stored and this speed is not reached, driving is similar to driving a vehicle without the speed limiter function.

Once you have reached the stored speed, no effort on the accelerator pedal will allow you to exceed the programmed speed except in an emergency (refer to information on “Exceeding the limit speed”).

Varying the limit speed

The limit speed may be changed by repeatedly pressing:

– Switch ***2*** (+) to increase the speed;

– Switch ***3*** (-) to decrease the speed.

The speed limiter function is in no way linked to the braking system.

Exceeding the limit speed

It is possible to exceed the limit speed at any moment. To do this: press the accelerator pedal **firmly and fully** (beyond the kickdown point).

Whilst the speed is being exceeded, the limit speed displayed on the instrument panel flashes.

Then, as far as is possible, release the accelerator pedal: the speed limiter function will return as soon as you reach a speed lower than the memorised speed.

Limited speed cannot be maintained

When driving down a steep gradient, the system is unable to maintain the limit speed: the memorised speed will flash on the instrument panel information display to inform you of this situation.

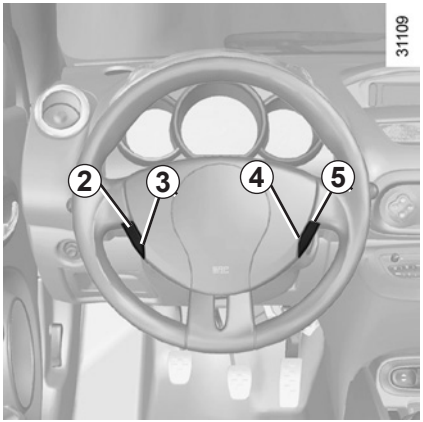

Putting the function on standby

The speed limiter function is suspended when you press switch ***4*** (O). In this case, the limit speed remains memorised and the message “SPEED MEMORY” accompanied by this speed appears on the instrument panel.

Recalling the limit speed

If a speed has been stored, it can be recalled by pressing switch ***5*** (R).

When the speed limiter is suspended, pressing switch ***2*** (+) or ***3*** (-) reactivates the function without taking into account the memorised speed: it is the speed at which the vehicle is moving that is taken into account.

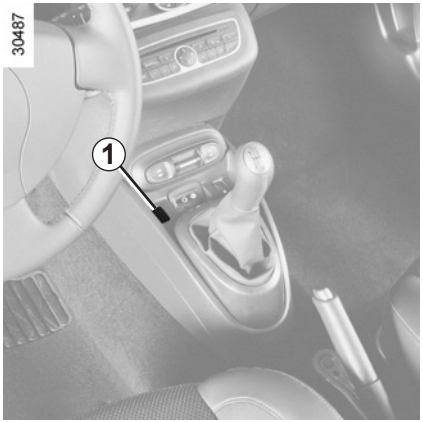

Switching off the function

The speed limiter function is interrupted when you press switch ***1***. In this case, the speed is no longer memorised. The orange indicator light on the instrument panel goes out, confirming that the function is deactivated.

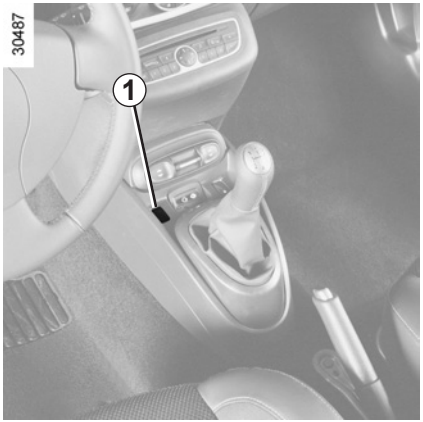

The cruise control function helps you to maintain your driving speed at a speed that you choose, called the **cruising speed**.

This cruising speed may be set at any speed above 20 mph (30 km/h).

The cruise control function is in no way linked to the braking system.

This function is an additional driving aid. However, the function does not take the place of the driver.

Therefore, it can under no circumstances replace the driver's responsibility to respect speed limits and to be vigilant (the driver must always be ready to brake).

Cruise control must not be used in heavy traffic, on winding or slippery roads (black ice, aquaplaning, gravel) and during bad weather (fog, rain, side winds etc.).

There is a risk of accidents.

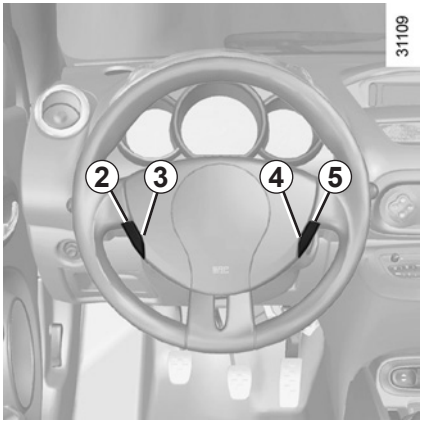

Controls

1 Main "On/Off" switch.

2 Cruising speed activation, storage and increase switch (+).

3 Cruising speed activation, storage and decrease switch (-).

4 Switch the function to standby (with stored cruising speed) (O).

5 Cruising speed activation, storage and recall switch (R).

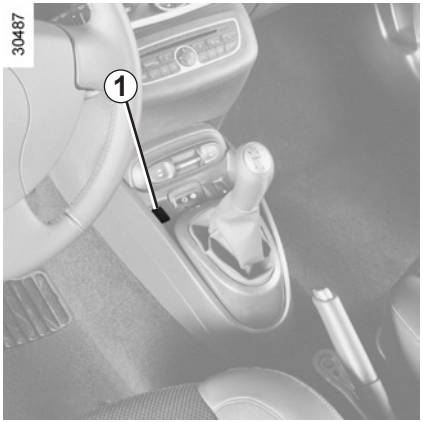

Switching on

Press switch ***1*** on the side showing .

Warning light ***6*** comes on, lit green, and the message “CRUISE CONTROL” appears on instrument panel, accompanied by dashes to indicate that the cruise control function is activated and waiting to memorise a cruising speed.

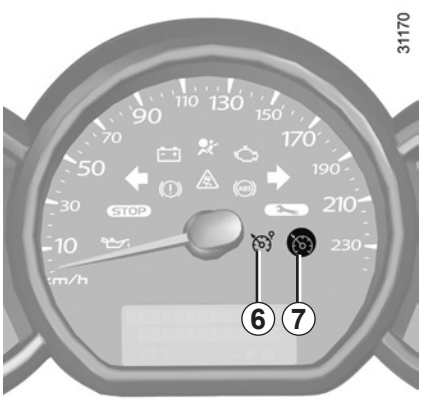

Activating cruise control

At a steady speed (above 20 mph (30 km/h) approximately) press switch ***2*** (+) or ***3*** (-): the function is activated and the current speed is memorised.

Cruise control activation is confirmed when indicator light ***7*** lights up in addition to indicator light ***6***.

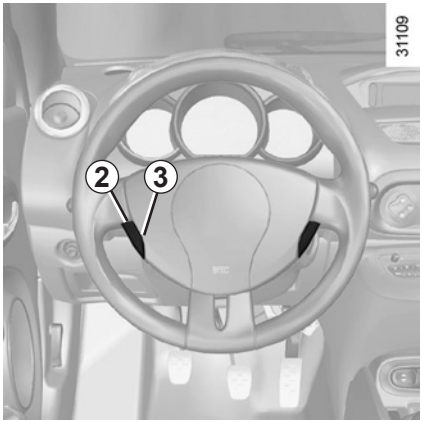

Driving

Once a cruising speed is stored and the cruise control function is active, you may lift your foot off the accelerator pedal.

Important: you are nevertheless advised to keep your feet close to the pedals in order to react if necessary.

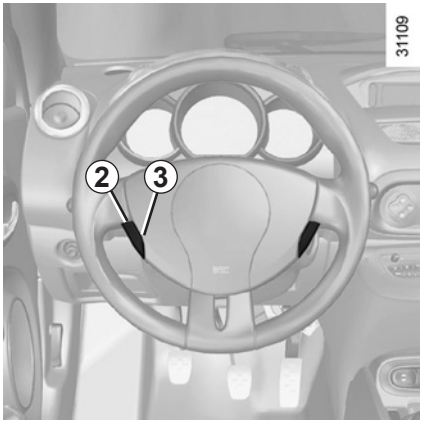

Adjusting the cruising speed

The cruising speed may be changed by pressing the following repeatedly:

– switch ***2*** (+) to increase the speed,

– switch ***3*** (-) to decrease the speed.

The cruise control function is in no way linked to the braking system.

Exceeding the cruising speed

The cruising speed may be exceeded at any time by depressing the accelerator pedal. While it is being exceeded, the cruising speed flashes on the instrument panel.

Then, release the accelerator pedal: after a few seconds, the vehicle will automatically return to its set cruising speed.

Cruising speed cannot be maintained

When driving down a steep gradient, the system is unable to maintain the cruising speed: the stored speed will flash on the instrument panel information display to inform you of this situation.

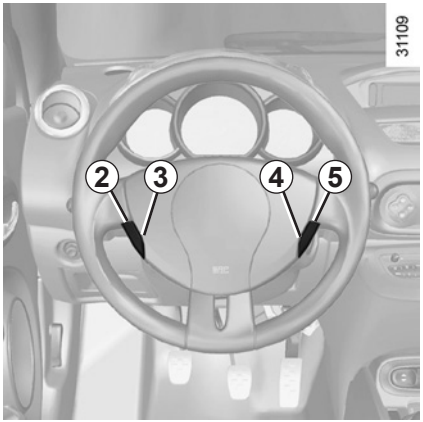

Putting the function on standby

The function is suspended when you:
– button ***4*** (O);
– depress the brake pedal;
– the clutch pedal or shift into neutral if the vehicle has an automatic gearbox.

In all three cases, the cruising speed remains memorised and the message “SPEED MEMORY” appears on the instrument panel.
Standby is confirmed when the green indicator light goes out.

Recalling the cruising speed

If a speed is stored, it can be recalled, once you are sure that the road conditions are suitable (traffic, road surface, weather conditions, etc.).

With a vehicle speed above 20 mph (30 km/h), press switch ***5*** (R).

Note: if the speed previously stored is much higher than the current speed, the vehicle will accelerate more rapidly to reach this threshold.

When the cruise control is set to standby, pressing switch ***2*** (+) reactivates the cruise control function without taking into account the stored speed: it is the speed at which the vehicle is moving that is taken into account.

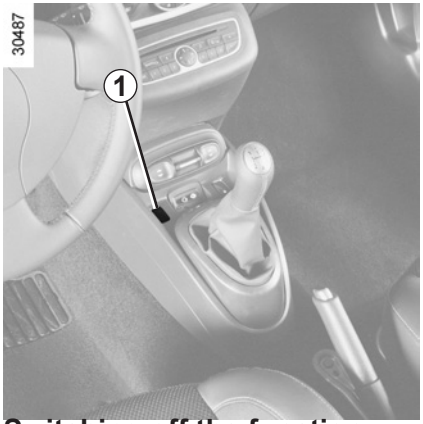

Switching off the function

The cruise control function is deactivated if you press switch ***1***: in this case a speed is no longer memorised.

The and indicator lights on the instrument panel go out, confirming that the function is deactivated.

Putting the cruise control on standby or switching it off does not cause a rapid reduction in speed: you must brake by depressing the brake pedal.

Section 3: Your comfort

Rotating hard roof 3.2
Air vents. 3.6
Manual air conditioning/heating system 3.8
Automatic climate control 3.12
Electric windows 3.19
Interior lighting 3.20
Sun visor 3.20
Passenger compartment storage space and fittings 3.21
Accessories socket – Ashtray 3.23
Luggage compartment. 3.24
Transporting objects in the boot 3.25
Multimedia equipment 3.26

Conditions of use

Immobilise the vehicle on a flat, level surface (never with the wheel on the pavement).

Apply the handbrake.

Temperature above -10°C.

Perform the operation with the engine running if possible (risk of discharging the battery).

To prevent the system from overheating, it cuts out automatically. It becomes operational again after a maximum of **30 minutes**.

When opening or closing the roof, ensure that nothing interferes with the moving parts (roof and roof cover).

Do not drive with the roof unlocked.

Do not open or close the roof if the wind speed is more than 20 mph (30 km/h) (risk of damage to the roof).

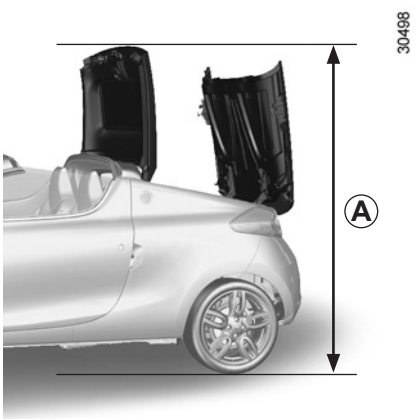

Operating the roof

Before opening/closing the roof, check that there is sufficient space above the vehicle to allow it to open.

Minimum height required ***A***: 2.05 m.

Never unlock the roof while driving.

Risk of damage to the roof and roof cover.

Driver's responsibility

Never leave your vehicle with the key or remote control inside and never leave a child (or a pet) unsupervised, even for a short while.
He/she may be able to operate the rotating hard roof and there is a risk of trapping his/her neck, arm, hand, etc., which could cause serious injuries.
If anything is trapped, reverse the rotating hard roof's direction of travel immediately by pressing the opposite side of the roof open/close button.

ROTATING HARD ROOF: opening/closing

Before opening/closing the roof

Make sure there are no objects in the way of the roof's operating area.
Make sure that there are no objects resting on the roof or roof cover.
Make sure that the luggage compartment lid is properly closed.

Opening the roof

Unlock the roof by pulling and turning control ***1*** clockwise. **Please note: only unlocking is manual – do not lift up the roof.**
Push switch ***2*** down and hold it until the roof is fully open. The message "ROOF OPENING" appears on the instrument panel accompanied by squares which indicate the progress. The side windows and the roof cover open, the roof moves into its housing and the roof cover closes.
If the message "ROOF OPENED" appears on the instrument panel accompanied by a beep, release switch ***2***.

Closing the roof

Lift switch ***2*** and hold it until the roof is fully closed. The side windows and roof cover open. The message "ROOF CLOSING" appears on the instrument panel accompanied by squares which indicate the progress. The roof and its cover close. If the message "LOCK ROOF LATCH" appears on the instrument panel accompanied by a beep, release switch ***2***.

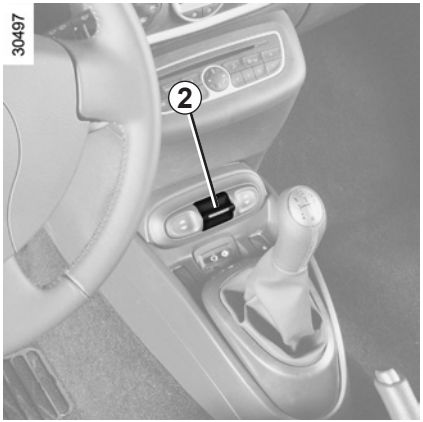

Pull and lock the roof by turning control ***1*** anticlockwise.
The windows do not rise automatically at the end of the roof closure cycle. Lift the electric window switches to raise the windows.

To avoid all risk of injury, ensure that nobody is in the proximity of the moving parts.

ROTATING HARD ROOF: operating fault (1/2)

The roof unlocks but does not open

Check that the luggage compartment lid is properly closed. Restart the operation: lock then unlock the roof **without pushing it upwards.**

Repair procedure

If there is a system fault, you can close the rotating hard roof.

To do this, open the roof cover manually.

Unclip logo ***1*** on the luggage compartment lid.

Remove plastic cover ***2*** to access the screw.

Ensure that there are no objects in roof/roof cover area ***A***.

Use the emergency key supplied in the glove box to turn the screw clockwise until the roof cover opens sufficiently (point of resistance).

To avoid all risk of injury, ensure that nobody is in the proximity of the moving parts.

When opening/closing the roof, ensure that nothing interferes with the moving parts (roof and roof cover).

ROTATING HARD ROOF: operating fault (2/2)

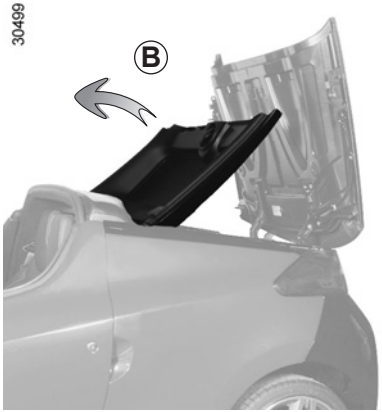

Close the roof again manually (movement ***B***), making sure that there is no contact with the roof cover.

Lower the roof cover using the emergency key to turn the screw anticlockwise until the roof cover closes (point of resistance).

Engage plastic cover ***2*** in its housing.

Clip on the logo.

If the message “CHECK ROOF” appears on the instrument panel continually or when the roof open/close switch is pressed, consult an approved dealer.

Pull and turn control ***3*** anticlockwise to lock the roof.

Consult an approved dealer.

AIR VENTS: air outlets (1/2)

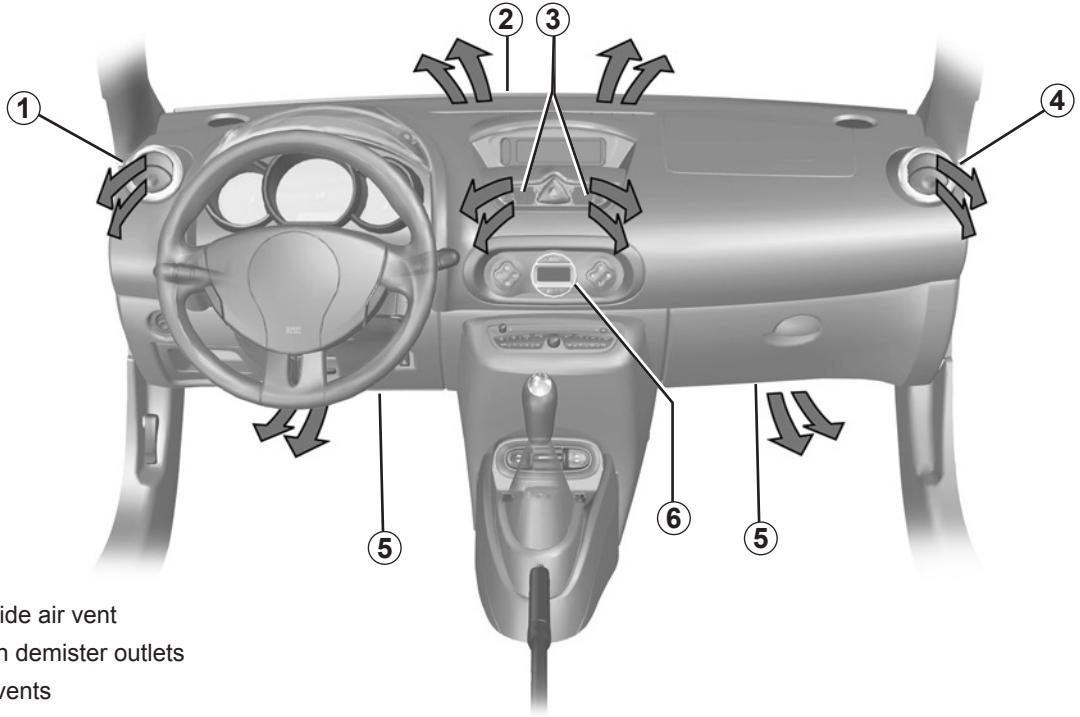

1 left-hand side air vent

2 windscreen demister outlets

3 centre air vents

4 right-hand side air vent

5 passenger footwell heater outlets

6 air conditioning control panel.

AIR VENTS: air outlets (2/2)

Side vent *1*

To open, press on the air vent.

Turn the vent to position it.

To remove bad odours from your vehicles, only use the systems designed for this purpose. Consult an approved Dealer.

Do not add anything to the vehicle's ventilation circuit (for example, to remove bad odours).

There is a risk of damage or of fire.

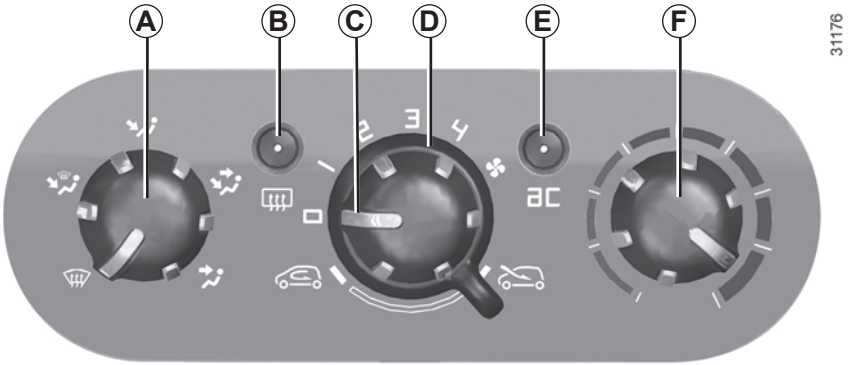

Controls
(depending on the vehicle)

A Adjusting the distribution of air in the passenger compartment.

B Heated rear screen and heated door mirror de-icing/demisting control and indicator light.

C Adjusting the ventilation speed.

D Air recirculation and isolation of the passenger compartment.

E Air conditioning operating indicator light and button.

F Adjusting the air temperature.

Information and advice for use:

Refer to the end of the paragraph on “Automatic climate control”.

Distribution of air in the passenger compartment

Turn control ***A***.

Close the dashboard vents for more effective demisting.
All the air flow is directed to the windscreen demisting vents.

The air flow is distributed between the air vents, the windscreen demisting vents and the footwells.

The air flow is directed mainly towards the footwells.

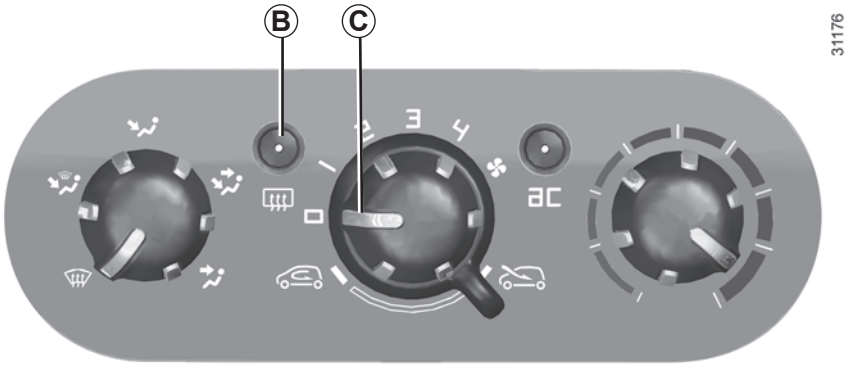

The air flow is directed towards the dashboard vents and the footwells.

All the air flow is directed to the dashboard vents.

This selection is not appropriate if all the air vents are closed.

Rear screen de-icing/ demisting

With the engine running, press button ***B***, the operating tell-tale for the button will come on.

This function permits rapid demisting/ de-icing of the rear screen and de-icing of the door mirrors (on equipped vehicles).

To exit this function, press button ***B*** again.

Demisting automatically stops by default.

Adjusting the ventilation speed

Turn control ***C*** from **0** to **4**.

The passenger compartment is ventilated by blown air. The blower determines how much air enters but vehicle speed has a slight effect on this.

The further the control is positioned to the right, the greater the amount of air blown into the passenger compartment.

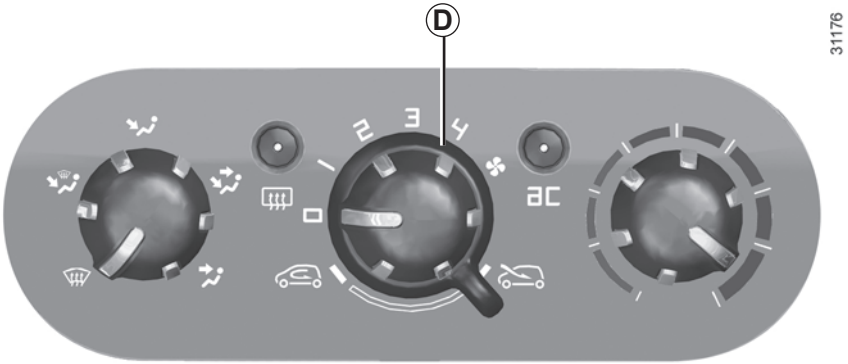

Prolonged use of this position (isolation mode) may mist up the windows slightly or cause odours due to the air not being renewed.
It is therefore advisable to return to normal operation (external air) by pressing control ***D*** when you have passed through the polluted area.

Air recirculation operation (isolation of the passenger compartment)

Turn control ***D*** towards air recirculation symbol .

In these conditions air is taken from the passenger compartment and is recirculated, with no air being taken from outside the vehicle.

Air recirculation is for:

– isolating the vehicle from the external atmosphere (driving in polluted areas, etc.);

– bringing the passenger compartment to the desired temperature as quickly as possible.

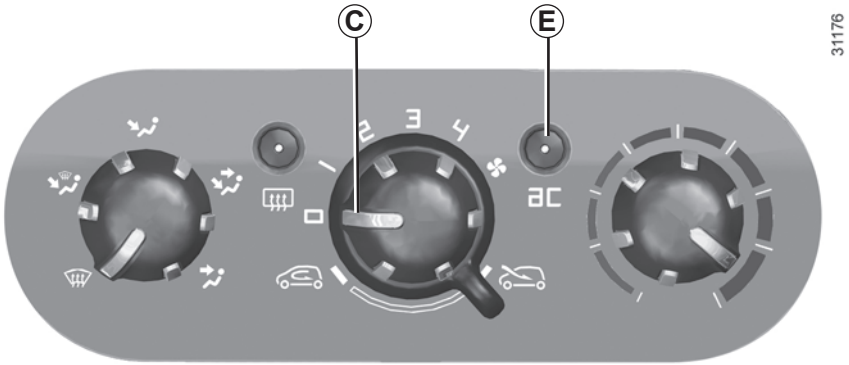

Air conditioning control

The air conditioning is switched on (indicator light on) or off (indicator light off) using button ***E***.

The system **cannot be switched on** if control ***C*** is set to **0**.

The air conditioning system is used for:

– lowering the temperature inside the passenger compartment;

– eliminating condensation more quickly.

Use the air recirculation function to lower the temperature as quickly as possible to the required level. Switch off the air recirculation function once a comfortable level has been reached.

Note: the air conditioning may be used in all conditions but does not operate when the external temperature is low.

AUTOMATIC CLIMATE CONTROL (1/6)

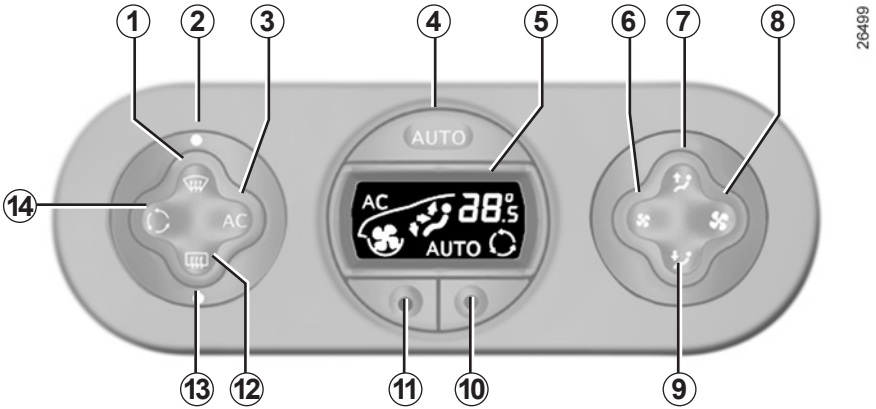

Controls
(depending on vehicle)

1 "Clear view" button for demisting and de-icing the windows and/or heated door mirrors.

3
Air conditioning on/off button.

4 Starting automatic mode.

5 Display.

6 and ***8*** Adjusting the ventilation speed.

7 and ***9*** Passenger compartment air distribution adjustment.

10 and ***11*** Adjusting the air temperature.

12 Heated rear screen and/or heated door mirror de-icing.

14
Air recirculation control.

Information and advice for use

Refer to information on "Air conditioning: information and advice on use".

Buttons ***1*** and ***12*** are complemented by operating indicator lights (***2*** and ***13***):

– indicator light on, the function is switched on,

– indicator light off, the function is switched off.

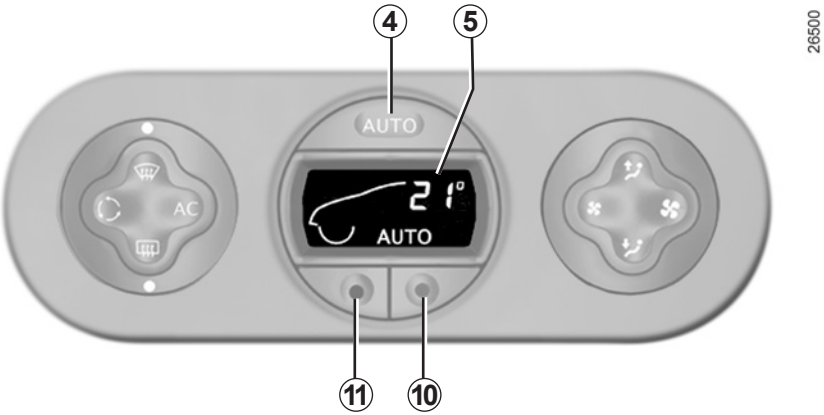

Automatic mode

Press button ***4***. AUTO lights up on display ***5***.

In most cases, the automatic climate control system ensures a comfortable temperature in the passenger compartment, while maintaining good visibility and optimising fuel consumption.

This is the recommended mode of use.

To reach and keep the chosen comfort level and to maintain good visibility, the system controls:

– ventilation speed;

– air distribution;

– air recirculation management;

– air conditioning start/stop;

– the air temperature.

Only the temperature and the AUTO symbol are displayed

Functions managed in automatic mode are not displayed.

– press button ***10*** to increase the temperature;

– press button ***11*** to decrease the temperature.

Note: The maximum and minimum settings of 15°C and 27°C allow the system to produce a minimum or maximum temperature, whatever the ambient conditions.

In automatic mode (AUTO lit on the display), all heating and air conditioning functions are controlled by the system.

When you modify certain functions, AUTO goes out. Only the modified function stops being controlled by the system.

Adjusting automatic mode

The system normally operates in automatic mode but you can alter the standard settings used by the system (air distribution, etc.). These options are explained on the following pages.

Automatic mode is the recommended mode of use

In most cases, the automatic climate control system ensures a comfortable temperature in the passenger compartment, while maintaining good visibility and optimising fuel consumption.

The types of adjustments that can be made are described in the following pages.

Return to automatic mode as soon as possible.

The displayed temperature values show a comfort level.

When starting the engine, increasing or decreasing the value displayed will not allow the comfort level to be reached any more quickly. The system will always optimise the temperature increase or decrease (the ventilation system does not start instantly at maximum speed: it gradually increases). This may take several minutes.

Generally speaking, unless there is a particular reason not to, the dashboard air vents should remain open.

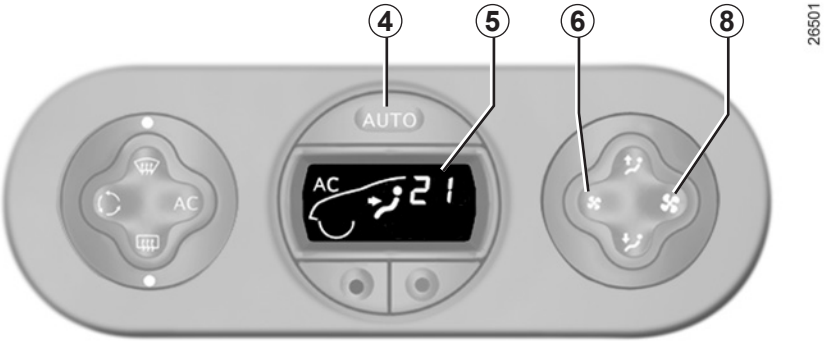

Distribution of air in the passenger compartment

There are five possible combinations for air distribution, which may be selected by pressing buttons ***6*** and ***8*** repeatedly. The arrows on display ***4*** indicate the setting selected:

The air flow is directed to the windscreen demisting vents.

The air flow is directed to the windscreen demisting vents and the passenger footwells.

The air flow is directed mainly to the dashboard air vents.

The air flow is directed towards all the air vents and the passenger footwells.

The air flow is directed mainly towards the footwells.

The manual air distribution option causes the operating tell-tale light on display ***5*** to go out (automatic mode), but only air distribution is no longer controlled automatically by the system.

Press button ***4*** to return to automatic mode.

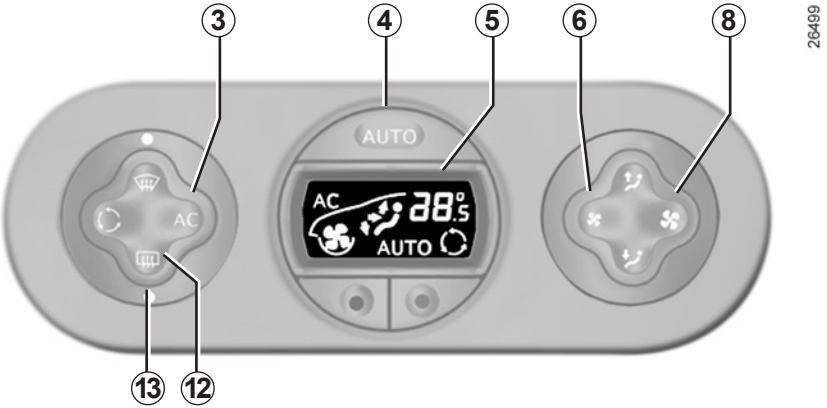

Switching air conditioning on or off

In automatic mode, the system switches the air conditioning system on or off, depending on the climate conditions.

Exit automatic mode by pressing button ***3***: AUTO goes out on display ***5*** and AC OFF lights up.

Note: the “Clear View” function automatically activates the air conditioning. Press button ***4*** to return to automatic mode.

Varying the ventilation speed

In automatic mode, the system uses the most suitable amount of air to reach and maintain the desired comfort level.

Exit automatic mode by pressing buttons ***6*** and ***8***.

These buttons allow you to increase or decrease ventilation speed.

Rear screen and/or door mirror de-icing/demisting.

Press button ***12***; indicator light ***13*** comes on.

This function allows electric demisting of the rear screen and/or the electric heated door mirrors, depending on the vehicle.

To exit this function, press button ***12*** again. Demisting automatically stops by default.

In automatic mode, depending on the outside air conditions, the ventilation may not start immediately at maximum power but will increase progressively until the engine temperature is warm enough to heat the passenger compartment air. This may take from a few seconds to several minutes.

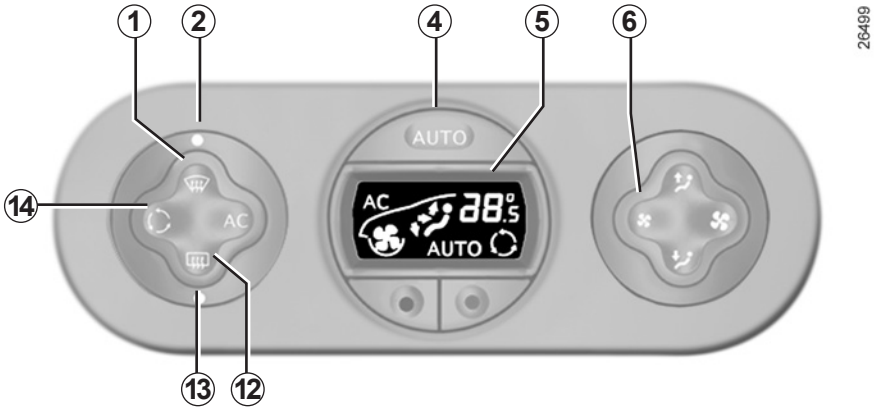

Clear View function

Press button ***1***; indicator lights ***2*** and ***13*** come on.

AUTO goes out on display ***5***.

This function rapidly demists/de-ices the windscreen, the front side windows and the door mirrors.

It imposes automatic operation of the air conditioning and heating of the rear screen and/or heated door mirrors, and inhibits air recirculation.

Press button ***12*** if you do not wish to switch on the heated rear screen and/or heated door mirrors.

Note: if you wish to reduce the air flow (which may produce a certain amount of noise in the passenger compartment), press button ***6***.

To exit this function, press:

– button ***1*** again;

– or button ***4*** (AUTO lights up on display ***5***).

Air recirculation

Pressing button ***14*** activates air recirculation (the symbol lights up on the display).

During recirculation, air is taken from the passenger compartment and is recycled, with no air being taken from outside the vehicle.

Air recirculation allows the external atmosphere to be cut off (when driving in polluted areas, etc.).

Prolonged use of the air recirculation mode may cause the windows to mist up or lead to odours, as the air is not renewed.

We therefore advise you to return to normal mode (external air) as soon as the air recirculation function is no longer required, by pressing button ***14*** again.

Fuel consumption

You will normally notice an increase in fuel consumption (especially when driving in town) when the air conditioning is operating. For vehicles fitted with manual air conditioning, switch off the system when it is not required.

Advice for reducing consumption and therefore helping to preserve the environment:

Drive with the air vents open and the windows closed.

If the vehicle has been parked in the sun, open the doors for a few moments to let the hot air escape before starting the engine.

Maintenance

Refer to the Maintenance Document for your vehicle for the inspection frequency.

Operating faults

As a general rule, contact your approved Dealer in the event of an operating fault.

- **Reduction in de-icing, demisting or air conditioning performance**. This may be caused by the passenger compartment filter cartridge becoming clogged.
- **No cold air is being produced.** Check that the controls are set correctly and that the fuses are sound. Otherwise, switch off the system.

Note

Presence of water under the vehicle. After prolonged use of the air conditioning system, it is normal for water to be present under the vehicle. This is caused by condensation.

Do not add anything to the vehicle's ventilation circuit (for example, to remove bad odours).

There is a risk of damage or of fire.

Do not open the refrigerant fluid circuit. The fluid may damage eyes or skin.

Operation

With the ignition switched on, press the switch for the relevant window upwards to raise it to the desired height.

Press the switch for the window concerned downwards to lower it to the desired height.

Driver's responsibility

Never leave your vehicle with the key or remote control inside and never leave a child (or a pet) unsupervised, even for a short while. The reason for this is that the child may endanger himself or others by starting the engine and activating equipment such as the window winders or the sunroof. If any part of the body becomes trapped, reverse the direction of the window immediately by pressing the relevant switch.

Risk of serious injury.

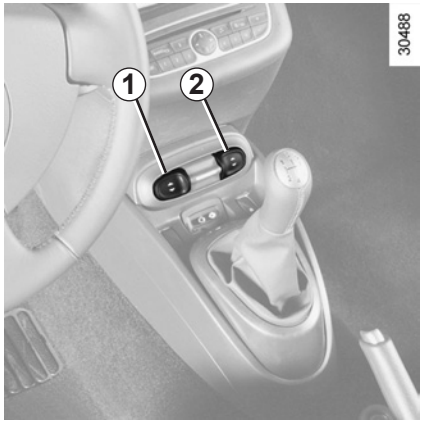

From the driver's seat

1 for the driver's side;

2 for the front passenger side.

One-touch mode

(lowering the window only)

Press switch ***1*** or ***2*** down briefly: the window will open completely.

Pressing the switch again while the window is moving will stop its movement.

Operating faults

Window fails to close and/or battery disconnected

The system has to be reinitialised:

With the door closed and the ignition switched on,

- Raise the window fully and keep the button pressed for 2 seconds after it has stopped moving.
- Lower the window fully and keep the button pressed for 2 seconds after it has stopped moving.

If necessary, contact an authorised dealer.

If the window closes or opens jerkily, the system is faulty.

Press the button to close the window as many times as necessary and contact an authorised dealer.

Avoid resting any objects against a half-open window: there is a risk that the electric window winder could be damaged.

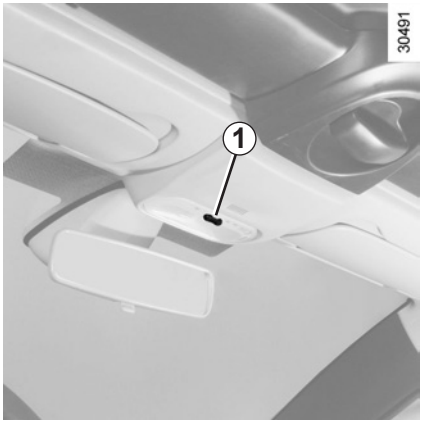

Courtesy light

Tilt switch ***1*** to move it to the position for:

– continuous lighting;
– intermittent lighting, which comes on when a door is opened. It goes out when the doors concerned are properly closed;
– immediate switching off.

Unlocking the vehicle or opening the doors switches on the timed courtesy lights.

Luggage compartment light

The light comes on when the luggage compartment is opened.

Automatic operation of interior lighting (depending on the vehicle)

– if the doors are unlocked using the remote control, the interior lights are switched on for approximately 15 seconds;
– if the doors are locked using the remote control, the lights are switched off immediately;
– if the door is open (or not properly closed), the lights are switched on for a period of approximately 15 minutes;
– if all the doors are closed, the interior lights start to dim when the ignition is switched on.

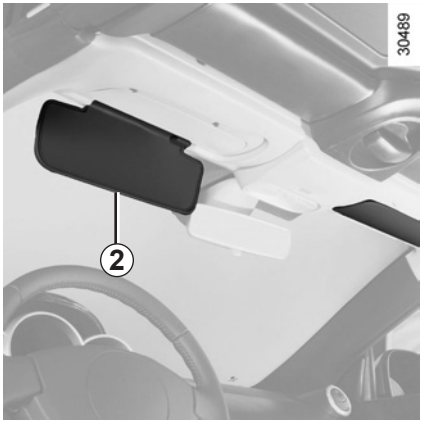

Sun visor

Lower sun visor ***2***.

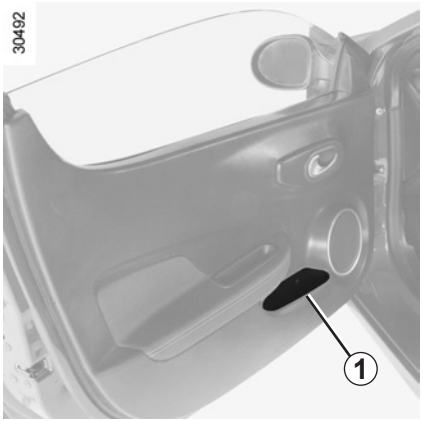

Door pockets *1*

These can be used to hold cups or the ashtray.

When turning corners, accelerating or braking, ensure that the receptacle being held by the cup holder is not dislodged.

There is a risk of burning if hot liquid escapes.

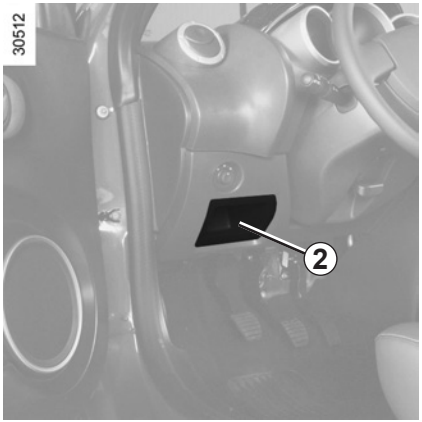

Driver's storage compartment *2*

Ensure that no hard, heavy or pointed objects are placed in the "open" storage compartments in such a way that they may fall onto passengers during sudden turning, braking or in the event of an accident.

Nothing should be placed on the floor area in front of the driver as such objects may slide under the pedal during braking manoeuvres, thus obstructing its use.

Passenger storage compartment

Pull handle ***3*** to open it.

This compartment can be used to hold a pencil.

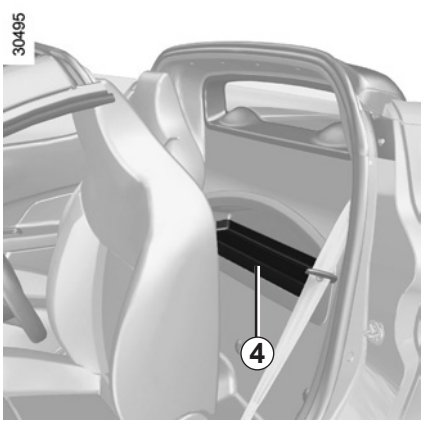

Rear storage compartment *4*

To access the storage compartment, move the seat forwards and tilt the seatback forwards.

Ensure that no hard, heavy or pointed objects are placed in the “open” storage compartments in such a way that they may fall onto passengers during sudden turning, braking or in the event of an accident.

Nothing should be placed on the floor area in front of the driver as such objects may slide under the pedal during braking manoeuvres, thus obstructing its use.

ASHTRAY, ACCESSORIES SOCKET

Ashtray *1*

This is a removable ashtray that can be fitted into the door storage compartments.

To open, lift the cover.

To empty it, pull the assembly. The ashtray will come out of its housing.

If your vehicle does not have an ashtray, you can purchase one from an approved dealer.

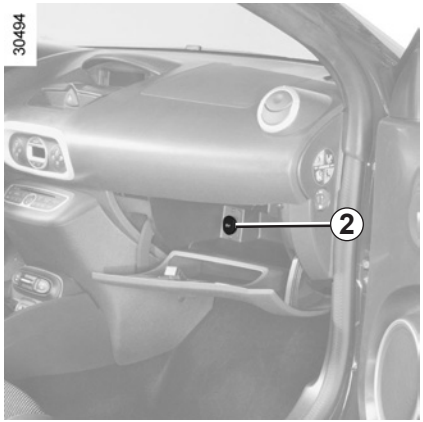

Accessories socket *2* or *3*

(depending on vehicle)

It is provided for connecting accessories approved by the Technical Department with a maximum power of 120 Watts (voltage 12 V).

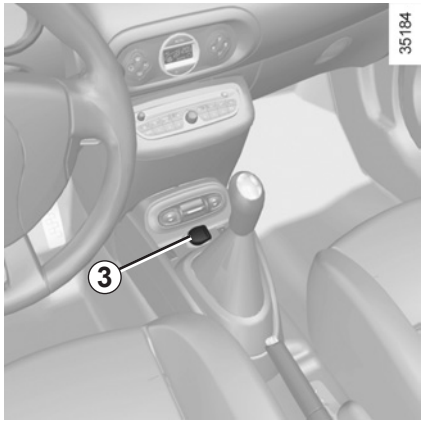

Connect accessories with a maximum power of 120 Watts only.

Fire hazard.

To open

Press button ***1*** and lift the tailgate.

To close

Lower the luggage compartment lid.

The luggage compartment lid can only be opened if the rotating hard roof is locked.

Storage under the carpet

(depending on vehicle)

To open, lift luggage compartment carpet ***A***.

Always position the objects transported so that the largest surface is against the partition.

Anchorage points

Hooks ***2*** located on either side of the luggage compartment allow the load to be secured.

Reinforcement bars ***1*** must not be removed.

Transporting objects on the roof and on the roof cover

The fitting of roof bars is prohibited on this vehicle.

Always position the heaviest items directly on the floor. Use the lashing points on the luggage compartment floor, if these are fitted to the vehicle. The luggage should be loaded in such a way that no items will be thrown forward and strike the occupants if the driver has to brake suddenly.

Audio system

The presence and location of the equipment described below depends on the vehicle version.

1 Radio;
2 Steering column control;
3 Microphone.

Hands-free telephone integrated control

On equipped vehicles, use microphone ***3*** and steering column control ***2***.

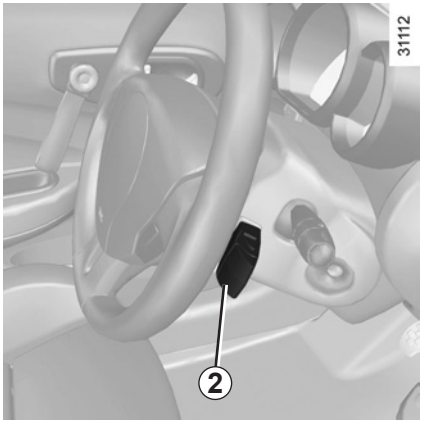

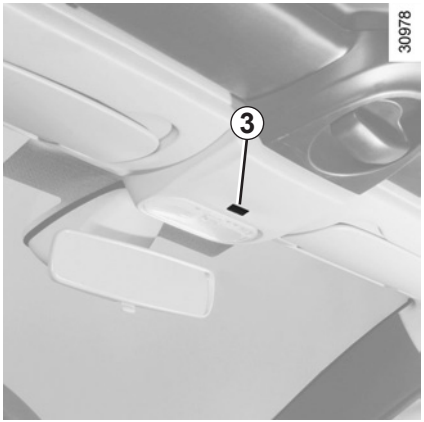

To use this equipment, consult the instructions for the equipment which should be kept with the other vehicle documentation.

Using the telephone

We remind you of the need to conform to the legislation in force concerning the use of such equipment.

Section 4: Maintenance

Bonnet 4.2
Engine oil level: 4.4
general information 4.4
topping up/filling 4.5
Engine oil change 4.6
Levels: 4.7
engine coolant 4.7
brake fluid 4.8
windscreen washer reservoir 4.9
Filters 4.9
Tyre pressure 4.10
Battery 4.11
Bodywork maintenance 4.12
Interior trim maintenance 4.14

To open, pull handle ***1***.

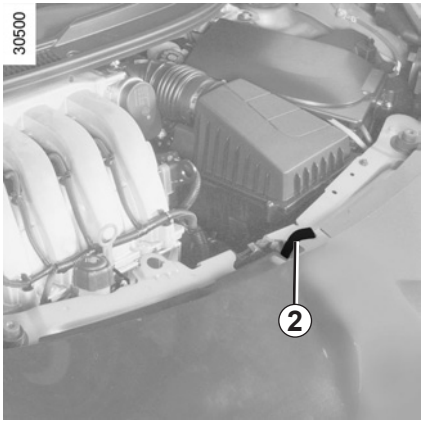

Unlocking the bonnet catch

To open, push tab ***2*** to the left as you open the bonnet.

The engine may be hot when carrying out operations in close proximity. In addition, the engine cooling fan can come on at any moment. Risk of injury.

In the event of even a slight impact involving the radiator grille or bonnet, have the bonnet lock checked by an approved Dealer as soon as possible.

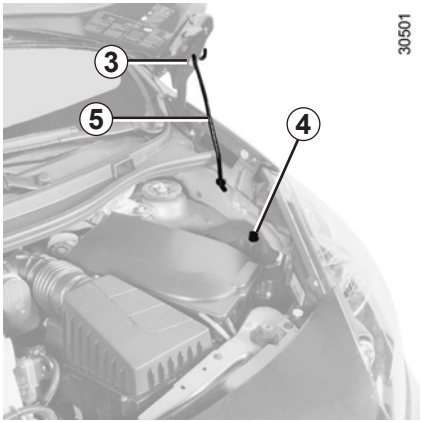

Opening the bonnet

Lift the bonnet and release stay ***5*** from its holder ***4***. For your own safety, it is **very important** to fix the stay into retainer ***3*** in the bonnet.

Ensure that the bonnet is properly locked.

Check that nothing is preventing the catch from locking (gravel, cloth, etc.).

Closing the bonnet

Before closing the bonnet, make sure that nothing has been left in the engine compartment.

To close the bonnet, replace stay ***5*** in holder ***4***. Hold the middle of the bonnet and guide it down to 20 cm above the closed position, then release. It will latch automatically under its own weight.

After carrying out any work in the engine compartment, check that nothing has been left behind (cloth, tools, etc.).

These may damage the engine or cause a fire.

ENGINE OIL LEVEL: general information

It is normal for an engine to use oil for lubrication and cooling of moving parts and it is normal to top up the level between oil changes.

However, contact your approved Dealer if more than 0.5 litres is being consumed every 600 miles (1,000 km) after the running in period.

Oil change frequency: check the oil level from time to time and certainly before any long journey to avoid the risk of damaging your engine.

In order to prevent splashing, it is recommended that a funnel be used when topping up/filling the oil.

The engine may be hot when working in close proximity. In addition, the engine cooling fan may start at any moment.

Risk of injury.

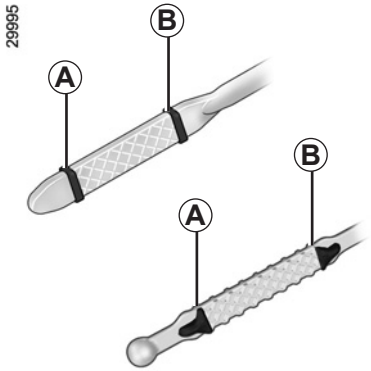

Reading the level using the dipstick

- engine switched off;
- remove the dipstick (refer to the following pages for its location) and wipe it with a clean lint-free cloth;
- push in the dipstick as far as it will go;
- take out the dipstick again;
- read the level: it should never fall below minimum mark ***A*** or exceed maximum mark ***B***.

Once the level has been read, push the dipstick in as far as it will go.

Consult your approved Dealer at once if you notice an abnormal or repeated drop in any of the fluid levels.

Exceeding the maximum engine oil level

The oil level should only be read with the dipstick as explained above.

If the oil level exceeds the maximum level, **do not start your vehicle** and contact an approved Dealer.

Under no circumstances should maximum filling level ***B*** be exceeded: this could damage the engine and the catalytic converter.

ENGINE OIL LEVEL: topping up/filling (1/2)

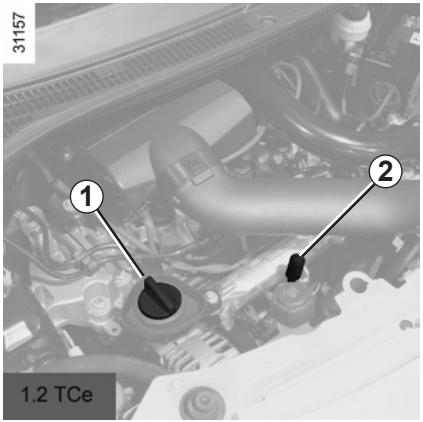

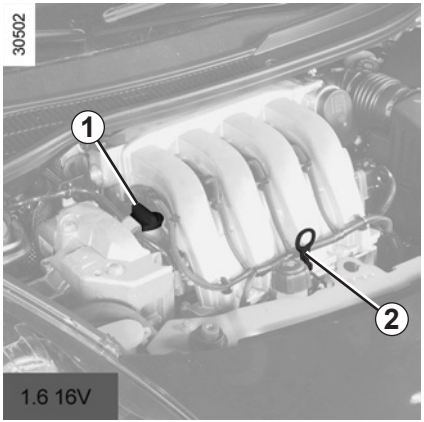

Topping up/filling

The vehicle must be parked on level ground and the engine should be cold (for instance, before the engine is started up for the first time in the day).

Engine oil grade
Refer to the Maintenance Service Booklet for your vehicle.

– Unscrew cap ***1***;
– top up the level (as a guide, the capacity between the minimum and maximum reading on dipstick ***2*** is between 1.5 and 2 litres, depending on the engine);
– wait for approximately 10 minutes to allow the oil to flow into the engine;
– check the level using dipstick ***2*** (as described above).

Once the level has been read, push the dipstick in as far as it will go.

Do not exceed the **max** level and do not forget to refit cap ***1*** and dipstick ***2***.

Oil change

Service interval: refer to the Maintenance Service Booklet for your vehicle.

Average capacities for oil change (including oil filter for information).
1.2 TCE engine: 4.2 litres
1.6 16V engine : 4.7 litres

Engine oil grade

Refer to the Maintenance Service Booklet for your vehicle.

The engine may be hot when carrying out operations in close proximity. In addition, the engine cooling fan can come on at any moment.

Risk of injury.

Engine oil change: if you are changing the oil when the engine is hot, be careful not to scald yourself if the oil overflows.

Filling: take care when topping up the oil that no oil drips onto engine components - risk of fire. Remember to refit the cap securely as there is a risk of fire if oil splashes onto hot engine components.

When working in the engine compartment, ensure that the windscreen wiper stalk is in the park position.

Risk of injury.

Never run the engine in an enclosed space as exhaust gases are poisonous.

Consult your approved Dealer at once if you notice an abnormal or repeated drop in any of the fluid levels.

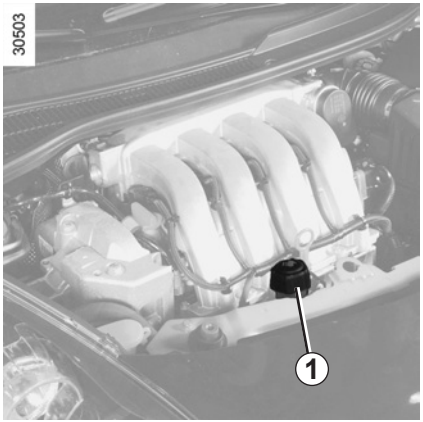

Coolant

With the engine switched off and on level ground, the level **when cold** must be between the “MINI” and “MAXI” marks on coolant reservoir ***1***.

Top this level up **when cold** before it reaches the MIN mark.

Consult your approved dealer at once if you notice an abnormal or repeated drop in any of the fluid levels.

Checking intervals

Check the coolant level regularly (very severe damage is likely to be caused to the engine if it runs out of coolant).

If the level needs to be topped up, only use products approved by our Technical Department which ensure:

– protection against freezing;

– anticorrosion protection of the cooling system.

Replacement intervals

Refer to the Maintenance Document for your vehicle.

No operations should be carried out on the cooling circuit when the engine is hot.

Risk of burns.

The engine may be hot when working in close proximity. In addition, the engine cooling fan may start at any moment.

Risk of injury.

When working in the engine compartment, ensure that the windscreen wiper stalk is in the park position.

Risk of injury.

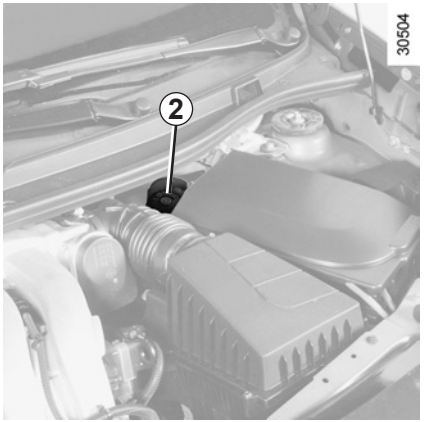

Brake fluid level

This should be checked frequently, and immediately if you notice even the slightest loss in braking efficiency.

The level should be read with the engine switched off and on level ground.

When working in the engine compartment, ensure that the windscreen wiper stalk is in the park position.

Risk of injury.

Level 2

It is normal for the level to drop as the brake shoes become worn, but it must never drop lower than the **"MIN"** warning line.

If you wish to check the disc and drum wear yourself, you should obtain the document explaining the checking procedure from our network or from the manufacturer's website.

The engine may be hot when working in close proximity. In addition, the engine cooling fan may start at any moment.

Risk of injury.

Topping up

After any operation on the hydraulic circuit, a specialist must replace the fluid.

Only use fluids approved by our Technical Department (and taken from a sealed container).

Replacement intervals

Refer to the Maintenance Document for your vehicle.

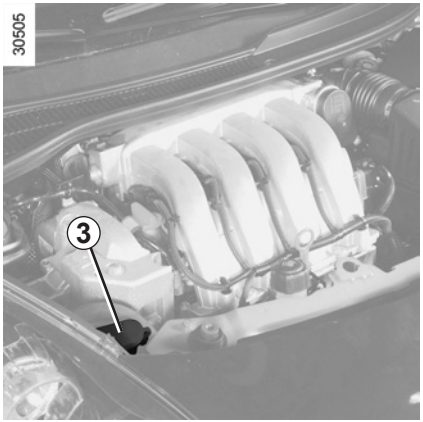

Windscreen washer reservoir

Topping up

With the engine switched off, open cap ***3***, fill until you can see the fluid, then refit the cap.

Liquid

Screen wash product (product with antifreeze in winter).

Jets

Use a tool such as a needle to adjust the height of the windscreen washer jets.

When working in the engine compartment, ensure that the windscreen wiper stalk is in the park position.

Risk of injury.

Filters

The filter elements (air filter, passenger compartment filter, etc.) should be replaced during the maintenance operations carried out on your vehicle.

Replacement intervals for filter elements: refer to the Maintenance Document for your vehicle.

The engine may be hot when working in close proximity. In addition, the engine cooling fan may start at any moment.

Risk of injury.

Label *A*

Open the driver's door to read it.

Tyre pressures should be checked when the tyres are cold.

If the tyre pressures cannot be checked when the tyres are **cold**, increase the pressures from **0.2** to **0.3** bar (or **3 PSI**). **Never deflate a hot tyre.**

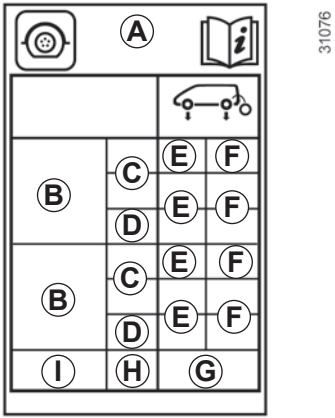

B: dimension of the tyres fitted to the vehicle.

C: intended driving speed.

D: recommended pressure for optimising fuel consumption.
Note: driving comfort may be altered.

E: front tyre pressure.

F: rear tyre pressure.

G: tyre pressure for the emergency spare wheel.

H: maximum intended driving speed for the emergency spare wheel.

I: emergency spare wheel dimensions.

Special note concerning fully laden vehicles (Maximum Permissible All-Up Weight) **and towing a trailer:** the maximum speed must be limited to **60 mph** (100 kph) and the tyre pressure increased by **0.2 bar.**
Please refer to the information on "Weights" in Section 6.

Tyre safety and use of snow chains: Refer to the information on "Tyres" in Section 5 for the servicing conditions and, depending on the version, the use of chains.

When they need to be replaced, only tyres of the same make, size, type and profile should be used on a single axle.
Tyres fitted to the vehicle should either be identical to those fitted originally or conform to those recommended by your approved dealer.

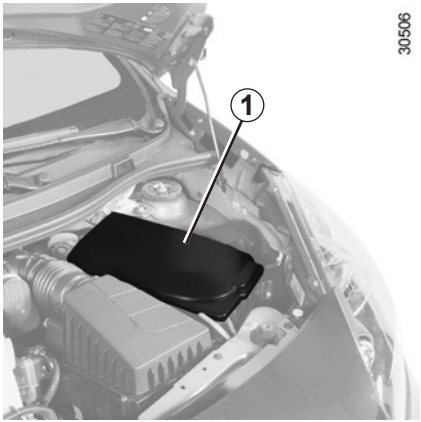

Battery

Battery ***1*** does not require any maintenance.

> Handle the battery with care as it contains sulphuric acid, which must not come into contact with eyes or skin. If it does, wash the affected area with plenty of cold water. If necessary, consult a doctor.
>
> Ensure that naked flames, red hot objects and sparks do not come into contact with the battery as there is a risk of explosion.

Depending on the vehicle, a system continuously checks the battery charge status. If the level drops, the message “CHARGE BATTERY” is displayed on the instrument panel. In this case, start the engine. The charge status of your battery can decrease especially if you use your vehicle:

– for short journeys;

– for driving in town;

– when the temperature drops;

– after extended use of consumers (radio etc.) with the engine switched off.

Replacing the battery

As this operation is complex, we advise you to contact an approved Dealer.

> The battery is a **specific type**, please ensure it is replaced with the same type. Consult an approved dealer.

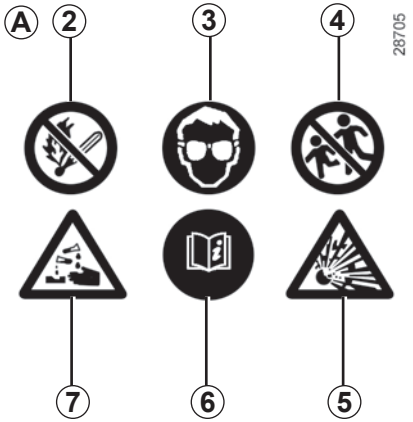

Label *A*

Observe the indications on the battery:

– ***2*** naked flames and smoking forbidden;

– ***3*** eye protection required;

– ***4*** keep away from children;

– ***5*** explosive materials;

– ***6*** refer to the handbook;

– ***7*** corrosive materials.

> The engine may be hot during operations in close proximity. In addition, the engine cooling fan may start at any moment.
>
> Risk of injury.

A well-maintained vehicle will last longer. It is therefore recommended to maintain the exterior of the vehicle regularly.

Your vehicle has been treated with very effective anti-corrosion products. It is nevertheless subject to various outside influences.

Corrosive agents in the atmosphere
- atmospheric pollution (built-up and industrial areas),
- saline atmospheres (near the sea, particularly in hot weather),
- seasonal and damp weather conditions, (e.g. road salt in winter, water from road cleaners, etc.).

Minor impacts

Abrasive action
Dust and sand in the air, mud, road grit thrown up by other vehicles, etc.

You should take a number of minor precautions in order to safeguard your vehicle against such risks.

What you should not do

Clean the rotating rotating hard roof using a high pressure washer and make sure you carefully wash the rotating hard roof seals; risk of leaks.

Use a high pressure washer less than one metre from the vehicle to wash under the rotating hard roof cover: risk of damage to the opening/closing mechanism.

Do not degrease or clean mechanical components (e.g. the engine compartment), underneath the body, parts with hinges (e.g. inside the doors) and painted plastic external fittings (e.g. bumpers) using high-pressure cleaning equipment or by spraying on products not approved by our Technical Department. Doing this could give rise to corrosion or operational faults.

Wash the vehicle in bright sunlight or freezing temperatures.

Do not scrape off mud or dirt without pre-wetting.

Allow dirt to accumulate on the exterior.

Allow rust to form following minor impacts.

Do not use solvents not approved by our Technical Department to remove stains as this could damage the paintwork.

Do not drive in snow or muddy conditions without washing the vehicle, particularly under the wheel arches and body.

You should

Wash your car frequently, **with the engine off**, with cleaning products recommended by the manufacturer (never use abrasive products). Rinse thoroughly beforehand with a jet:

– spots of tree resin and industrial grime;
– mud in the wheel arches and underneath the body which forms damp patches;
– **bird droppings**, which cause a chemical reaction with the paint that **rapidly discolours paintwork and may even cause the paint to peel off;**
  wash the vehicle **immediately** to remove these marks since it is impossible to remove them by polishing;
– salt, particularly in the wheel arches and underneath the body after driving in areas where the roads have been gritted.

Remove any plant matter (resin, leaves, etc.) from the vehicle regularly.

Clean the roof cover using a soft cloth.

Respect local regulations about washing vehicles (e.g. do not wash your vehicle on a public highway).

Observe the vehicle stopping distances when driving on gravelled surfaces to prevent paint damage.

Repair, or have repaired quickly, areas where the paint has been damaged, to prevent corrosion spreading.

Remember to visit the body shop periodically in order to maintain your anti-corrosion warranty. Refer to the Maintenance Document.

If it is necessary to clean mechanical components, hinges, etc., spray them with products approved by our Technical Department to protect them after they have been cleaned.

We have selected special products to care for your vehicle and you can obtain these from the manufacturer's accessory outlets.

Using a roller type car wash

Return the windscreen wiper stalk to the Park position (refer to the information on the "Windscreen washer, wiper" in Section 1). Check the mounting of external accessories, additional lights and mirrors, and ensure that the wiper blades are secured with adhesive tape. Remove the radio aerial mast if your vehicle is fitted with this equipment.
Remember to remove the tape and refit the antenna after washing.

Cleaning the headlights

As the headlights are made of plastic "glass", use a soft cloth or cotton wool to clean them. If this does not clean them properly, moisten the cloth with soapy water, then wipe clean with a soft damp cloth or cotton wool.
Finally, carefully dry off with a soft dry cloth.

Cleaning products containing alcohol must not be used.

INTERIOR TRIM MAINTENANCE (1/2)

A well-maintained vehicle will last longer. It is therefore recommended to maintain the interior of the vehicle regularly.

A stain should always be dealt with swiftly.

Whatever type of stain is on the trim, use **cold** (or warm) **soapy water with natural soap**.

Detergents (washing-up liquid, powdered products, alcohol-based products) should not be used.

Use a soft cloth.

Rinse and soak up the excess.

Glass instrument panel

(e.g. instrument panel, clock, exterior temperature display, radio display, etc.)

Use a soft cloth (or cotton wool).
If this does not clean it properly, use a soft cloth (or cotton wool) slightly moistened with soapy water and then wipe clean with a soft damp cloth or cotton wool.
Finally, **carefully** dry off with a soft dry cloth.

Cleaning products containing alcohol must not be used under any circumstances.

Seat belts

These must be kept clean.
Use products selected by our Technical Department (Approved outlets) or warm, soapy water and a sponge and wipe with a dry cloth.
Detergents or dyes must not be used under any circumstances.

Textiles (seats, door trim, etc)

Vacuum-clean the textiles **regularly**.

Liquid stain

Use soapy water.

Dab lightly (never rub) with a soft cloth, rinse and remove the excess.

Solid or pasty stain

Carefully remove the excess solid or pasty material **immediately** with a spatula (working from the edges to the centre to avoid spreading the stain).
Clean as for a liquid stain.

Special instructions for sweets or chewing gum

Put an ice cube on the stain to solidify it, then proceed as for a solid stain.

For further recommendations for maintaining the interior, and/or for any unsatisfactory results, please see an authorised dealer.

Removal/replacing removable equipment originally fitted in the vehicle

If you need to remove equipment in order to clean the passenger compartment (for example, mats), always ensure that they are correctly refitted and are the right way around (the driver's mat should be fitted on the driver's side, etc.) and fit them with the components supplied with the equipment (for example, the driver mat should always be fixed using the pre-fitted mounting components).

With the vehicle stationary, ensure that nothing will impede driving (anything obstructing the pedals, heel wedged by the mat, etc.).

You should not:

You are strongly advised not to position objects such as deodorants, scents, etc. near air vents, as this could damage your dashboard trim.

You are strongly recommended not to use high-pressure or spray cleaning equipment inside the passenger compartment: use of such equipment could impair the correct functioning of the electrical or electronic components in the vehicle, or have other detrimental effects.

Section 5: Practical advice

Puncture 5.2
Emergency spare wheel 5.2
Tyre inflation kit 5.3
Tool kit (jack, wheelbrace, etc.) 5.6
Wheel trim 5.6
Changing a wheel 5.7
Tyres (tyre and wheel safety, use in winter) 5.9
Rear lights (changing bulbs) 5.14
Indicator lights (changing bulbs) 5.15
Interior lights (changing bulbs) 5.17
Fuses. 5.19
Battery 5.22
Key, radio frequency remote control: battery. 5.24
Accessories 5.25
Wipers (replacing blades) 5.26
Towing 5.27
Operating faults 5.28

In the event of a puncture, depending on the vehicle, you will have:

An emergency spare wheel or tyre inflation kit (refer to the information on the following pages).

Emergency spare wheel

This is located in the luggage compartment. To access it:
- open the luggage compartment lid;
- lift luggage compartment carpet ***A***;
- unscrew the central mounting;
- remove the emergency spare wheel.

If the emergency spare wheel has been stored for several years, have it checked by your Dealer to ensure that it is safe to use.

Vehicles fitted with an emergency spare wheel which is different to the four other wheels:

- Never fit more than one emergency spare wheel to the same vehicle.
- Replace the emergency spare wheel as soon as possible with a wheel identical to the original one.
- When this is fitted to the vehicle, which must only be a temporary measure, the driving speed must not exceed the speed indicated on the label on the wheel.
- Fitting an emergency spare wheel may alter the way the vehicle usually runs. Avoid sudden acceleration or deceleration and reduce your speed when cornering.
- If you need to use snow chains, fit the emergency spare wheel to the rear axle and check the tyre pressure.

TYRE PRESSURE KIT (1/3)

The kit repairs tyres when tread ***A*** has been damaged by objects smaller than 4 mm. It cannot repair all types of puncture, such as cuts larger than 4 mm, or cuts in tyre sidewall ***B***.

Ensure also that the wheel rim is in good condition.

Do not pull out the foreign body causing the puncture if it is still in the tyre.

Do not attempt to use the inflation kit if the tyre has been damaged as a result of driving with a puncture.

You should therefore carefully check the condition of the tyre sidewalls before any operation.

Driving with underinflated, flat or punctured tyres can be dangerous and may make the tyre impossible to repair.

This repair is temporary

A tyre which has been punctured should always be inspected (and repaired, where possible) as soon as possible by a specialist.

When taking a tyre which has been repaired using this kit to be replaced, you must inform the specialist.

When driving, vibration may be felt due to the presence of the repair product injected into the tyre.

The kit is only approved for inflating the tyres of the vehicle originally equipped with the kit.

It must never be used to inflate the tyres of another vehicle, or any other inflatable object (rubber ring, rubber boat, etc.).

Avoid spillage on skin when handling the repair liquid bottle. If droplets do leak out, rinse them off with plenty of water.

Keep the repair kit away from children.

Do not dispose of the empty bottle in the countryside. Return it to your approved dealer or to a recycling organisation.

The bottle has a limited service life which is indicated on its label. Check the expiry date.

Contact an approved dealer to replace the inflation tube and repair product bottle.

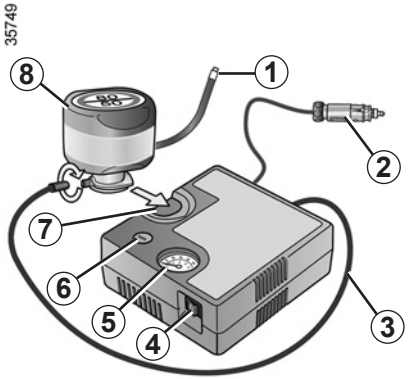

Depending on the vehicle, in the event of a puncture, use the kit located in the boot or underneath the luggage compartment carpet.

Before using this kit, park the vehicle at a sufficient distance from traffic, switch on the hazard warning lights, apply the handbrake, ask all passengers to leave the vehicle and keep them away from traffic.

With the engine running and the parking brake applied,

– unroll the hose from the container;

– connect the compressor hose ***3*** to the container's inlet ***8***;

– depending on the vehicle, connect the container ***8*** to the compressor from the container recess ***7***;

– unscrew the valve cap on the relevant wheel and screw on the container's inflation adapter ***1***;

– adapter ***2*** **must** be connected to the vehicle accessories socket;

– press switch ***4*** to inflate the tyre to the recommended pressure (please refer to the information in the section on "Tyre pressure");

– after a maximum of **15** minutes, stop inflating and read the pressure (on pressure gauge ***5***).

Note: while the container is emptying (approximately 30 seconds), the pressure gauge ***5*** will briefly indicate a pressure of up to **6** bar. The pressure will then drop.

– adjust the pressure: to increase it, continue inflation with the kit; to reduce it, press button ***6***.

If a minimum pressure of 1.8 bar is not reached after 15 minutes, repair is not possible; do not drive the vehicle but contact an approved dealer.

If the vehicle is parked on the hard shoulder, you must warn other road users of your vehicle's presence with a warning triangle or with other devices as per the legislation applying to the country you are in.

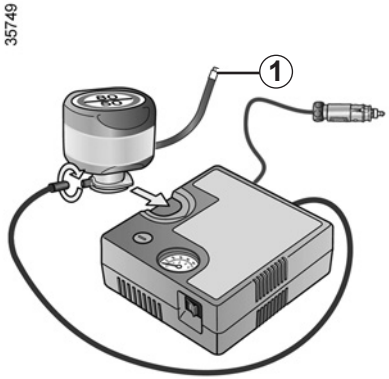

Once the tyre is correctly inflated, remove the kit: slowly unscrew the inflation adapter ***1*** to prevent any repair product from escaping and store the container in plastic packaging to prevent the product from escaping.

Nothing should be placed around the driver's feet as such objects may slide under the pedals during sudden braking manoeuvres and obstruct their use.

– Affix the driving recommendation label to the dashboard where it can easily be seen by the driver;
– Put the kit away.
– At the end of this initial inflation operation, air will still escape from the tyre. You must drive a short distance in order to seal the hole.
– Start immediately and drive at between 12 and 40 mph (20 and 60 km/h) in order to distribute the product evenly in the tyre and, after driving for 2 miles (3 km), stop and check the pressure.
– If the pressure is greater than 1.3 bar but less than the recommended pressure (refer to the label affixed to the edge of the driver's door), readjust it. Otherwise, please contact an authorised dealer: the tyre cannot be repaired.

Precautions when using the kit

The kit should not be operated for more than 15 consecutive minutes.

Please be aware that a poorly tightened or missing valve cap can make the tyres less airtight and may lead to pressure loss.

Always use valve caps identical to those fitted originally and tighten them fully.

Following repair with the kit, do not travel further than 120 miles (200 km). In addition, reduce your speed and under no circumstances exceed 48 mph (80 km/h). The sticker, which you must affix in a prominent position on the dashboard, reminds you of this.
Depending on the country or local legislation, a tyre repaired with the inflation kit may need to be replaced.

TOOL KIT/WHEEL TRIM – WHEEL

The tool kit is located in the luggage compartment: lift the luggage compartment carpet then unscrew the central mounting.

The tools included in the tool kit depend on the vehicle.

Wheelbrace *1*

This is used to tighten or release the wheel bolts.

Towing hitch *2*
Refer to the information on “Towing” in Section 5.

Jack *3*
When replacing the jack, fold it correctly and position the wheelbrace correctly before replacing it in its position.

Hubcap tool *4*
This tool is used to remove the wheel trims.

Do not leave the tools unsecured inside the vehicle as they may come loose under braking. After use, check that all the tools are correctly clipped into the tool kit, then position it correctly in its housing: there is a risk of injury.

If wheel bolts are supplied in the tool kit, only use these bolts for the emergency spare wheel: refer to the label affixed to the emergency spare wheel.

The jack is designed for wheel changing purposes only. Under no circumstances should it be used for carrying out repairs underneath the vehicle or to gain access to the underside of the vehicle.

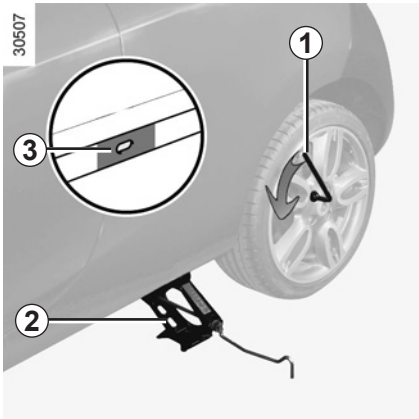

Switch on the hazard warning lights.

Keep the vehicle away from traffic and on a level surface where it will not slip (if necessary, place a solid support under the jack base).

Apply the parking brake and engage a gear (first or reverse).
Ask all the passengers to leave the vehicle and keep them away from traffic.

Vehicles equipped with jack, wheelbrace and wheel wrench

If necessary, remove the wheel trim.

Use wheelbrace ***1*** to slacken off the wheel bolts. Fit it so that you press downwards rather than pulling upwards.

If the vehicle is not equipped with a jack or wheelbrace, you can obtain these from your approved dealer.

If the vehicle is parked on the hard shoulder, you must warn other road users of your vehicle's presence with a warning triangle or with other devices as per the legislation applying to the country you are in.

Offer up jack ***2*** horizontally; the jack head **must** be lined up with sill ***3*** as close as possible to the wheel concerned.

Start cranking the jack up by hand to align the base plate (which should be pushed slightly under the vehicle).

Turn the wheelbrace until the wheel lifts off the ground.

To prevent any risk of injury or damage to the vehicle, only crank the jack until the wheel you are replacing is a maximum of 3 centimetres off the ground.

CHANGING A WHEEL (2/2)

Undo the bolts and take off the wheel.

Fit the emergency spare wheel onto the hub and rotate it until the mounting holes in the wheel are aligned with those of the hub.

If bolts are supplied with the emergency spare wheel, only use these bolts for the emergency spare wheel. Tighten the bolts, checking that the wheel is correctly positioned on its hub and lower the jack.

With the wheel on the ground, tighten the bolts fully and have the tightness of the bolts checked (tightening torque: 105 N.m) and the emergency spare wheel pressure checked as soon as possible.

If you have a puncture, replace the wheel as soon as possible.

A tyre which has been punctured should always be inspected (and repaired, where possible) by a specialist.

Tyre and wheel safety

The tyres are the only contact between the vehicle and the road, so it is essential to keep them in good condition.

You must make sure that your tyres conform to local road traffic regulations.

When they need to be replaced, only tyres of the same make, size, type and profile should be used.

Tyres fitted to the vehicle should either be identical to those fitted originally or conform to those recommended by your approved dealer.

Maintaining the tyres

The tyres must be in good condition and the tread form must have sufficient depth; tyres approved by our technical department have tread wear indicators ***1*** which are **indicators moulded into the tread at several points**.

When the tyre tread has been worn to the level of the wear indicators, **they become visible *2*:** it is **then** necessary to replace your tyres because the tread rubber is **no more than 1.6 mm deep, resulting in poor roadholding on wet roads**.

An overloaded vehicle, long journeys by motorway, particularly in very hot weather, or continual driving on poorly surfaced minor roads will lead to more rapid tyre wear and affect safety.

Incidents which occur when driving, such as striking the kerb, may damage the tyres and wheel rims, and could also lead to misalignment of the front or rear axle geometry. In this case, have the condition of these checked by an approved dealer.

Tyre pressures

Adhere to the tyre pressures (including the emergency spare wheel). The tyre pressures should be checked at least once a month and additionally before any long journey (refer to the label affixed to the edge of the driver's door).

Incorrect tyre pressures lead to abnormal tyre wear and unusually hot running. These are factors which may seriously affect safety and lead to:

– poor road holding,

– risk of bursting or tread separation.

The pressure depends on the load and the speed of use. Adjust the pressure according to the conditions of use (refer to the label affixed to the edge of the driver's door).

Pressures should be checked when the tyres are cold; ignore higher pressures which may be reached in hot weather or following a fast journey.

If tyre pressures cannot be checked when the tyres are **cold,** the normal pressures must be increased by **0.2** to **0.3** bar (or **3 PSI**).

Never deflate a hot tyre.

Special note

Depending on the vehicle, there may be an adapter which needs to be positioned on the valve before air is added.

Please be aware that a poorly tightened or missing valve cap can make the tyres less airtight and lead to pressure loss.

Always use valve caps identical to those fitted originally and tighten them fully.

Fitting new tyres

For safety reasons, this operation must be carried out by a specialist.

Fitting different tyres may change your vehicle as follows:

– it may mean that your vehicle no longer conforms to current regulations;

– It may change the way it handles when cornering;

– It may cause the steering to be heavy;

– It may affect the use of snow chains.

Emergency spare wheel

Refer to the information on the "Emergency spare wheel" and instructions on "Changing a wheel" in Section 5.

Use in winter

Chains

For safety reasons, fitting snow chains to the rear axle is strictly forbidden.

Chains cannot be fitted to tyres which are larger than those originally fitted to the vehicle.

Snow or Winter tyres

We would recommend that these be fitted to all **four wheels** to ensure that your vehicle retains maximum adhesion.

Warning: These tyres sometimes have a specific direction of rotation and a maximum speed index which may be lower than the maximum speed of your vehicle.

Studded tyres

This type of equipment may only be used for a limited period and as laid down by local legislation. It is necessary to observe the speed specified by current legislation.

These tyres must, at a minimum, be fitted to the two front wheels.

In all cases, we would recommend that you contact an approved dealer who will be able to advise you on the choice of equipment which is most suitable for your vehicle.

Chains may only be fitted to tyres of the same size as those originally fitted to **your vehicle**.

Chains may be fitted, provided that they are specific chains. We would advise you to consult an approved Dealer.

Special notes on versions fitted with 17” wheels: they cannot be fitted with snow chains.

If you wish to use **special equipment**, consult an approved dealer.

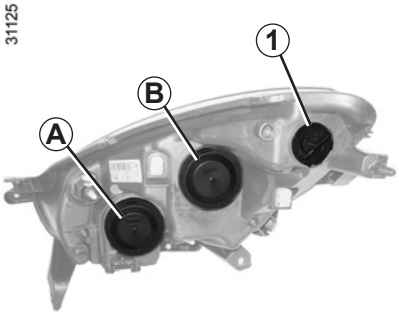

Dipped beam *A*/main beam *B* headlights

Remove cover ***A*** or ***B***, disconnect bulb ***3*** or ***4***, unlock spring ***2*** or ***5*** to remove the bulb.

Do not touch the bulb glass. Hold it by its base.
When the bulb has been changed, make sure you refit the cover correctly.

Bulb type: H1.

It is **essential** to use anti U.V. 55W bulbs so as not to damage the plastic on the headlights.

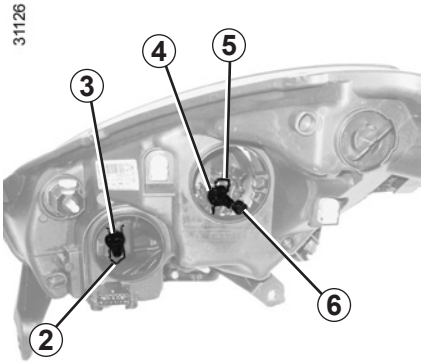

Side light

Pull bulb holder ***6***. Change the bulb.

Bulb type: W5W.

Direction indicator lights

Rotate bulb holder ***1*** to unlock it.

Bulb type: PY21W.

To comply with local legislation, or as a precaution, you can obtain an emergency kit containing a set of spare bulbs and fuses from an approved dealer.

The bulbs are under pressure and can break when replaced.

Risk of injury.

The engine may be hot when carrying out operations in close proximity. In addition, the engine cooling fan can come on at any moment.

Risk of injury.

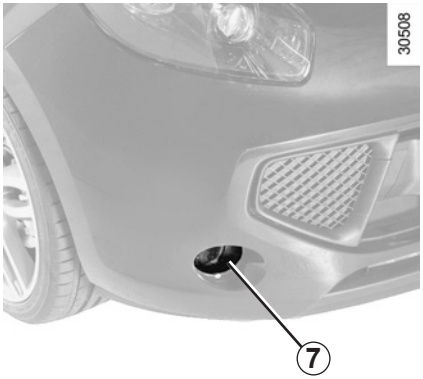

Front fog lights 7

Changing a bulb

– Unclip the cover;

– turn bulb ***8*** a quarter of a turn and remove it;

– disconnect the bulb and change it.

Do not touch the bulb glass. Hold it by its base.
When the bulb has been changed, make sure you refit the cover correctly.

Bulb type: H11 55W.

For refitting, proceed in the reverse order to removal.

Ensure that the bulb is correctly secured and reposition the cover.

To comply with current legislation, or as a precaution, you can obtain an emergency kit from an approved dealer containing a set of spare bulbs and fuses.

Any operation on (or modification to) the electrical system must be performed by an approved dealer since incorrect connections could damage the electrical equipment (wiring, components, in particular the alternator). In addition, your dealer has available all the parts necessary for fitting electrical components.

REAR LIGHTS AND SIDE LIGHTS: changing bulbs (1/3)

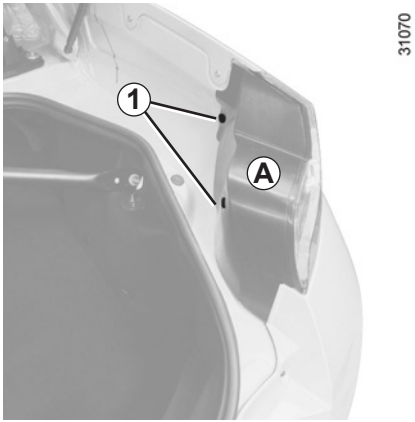

Undo screws ***1***.

Remove plastic cover ***A***.

Undo screw ***2***.

Unclip and detach the rear light cluster from the outside.

Undo bulb holder a quarter of a turn.

Undo the bulb a quarter of a turn.

Replace the bulb.

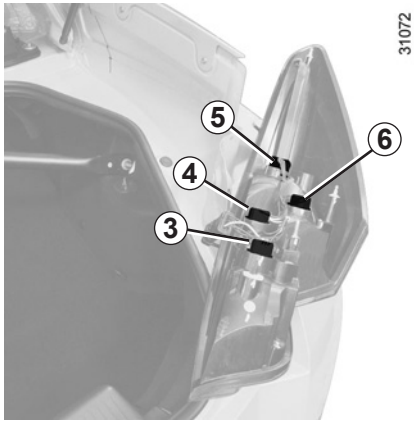

3 **Side light and fog light**
Bulb type: **P 21/4W**.

4 **Side light**
Bulb type: **P 21/4W**.

5 **Side light and brake light**
Bulb type: **P 21/5 W**.

6 **Direction indicator light**
Bulb type: **PY 21 W**.

The bulbs are under pressure and can break when replaced.

Risk of injury.

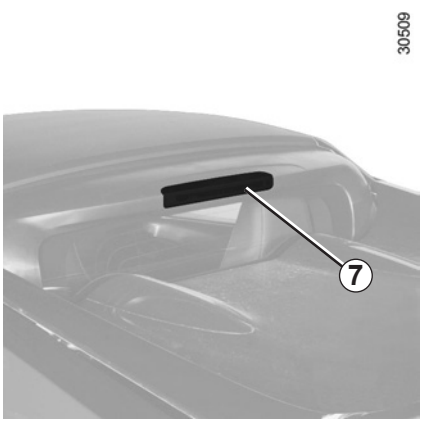

High level brake light *7*

Consult an approved Dealer.

Number plate lights *9*

– Unclip light ***9*** by pressing tab ***8***;

– remove the light cover to gain access to the bulb.

Bulb type: W5W.

The bulbs are under pressure and can break when replaced.

Risk of injury.

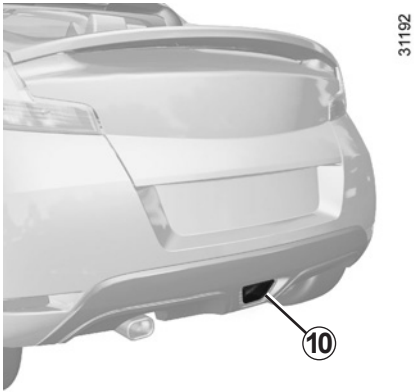

Reversing light *10*

– Turn the bulb holder a quarter of a turn and take out the bulb;

– disconnect the bulb and change it.

Bulb type: P 21 W.

The bulbs are under pressure and can break when replaced.

Risk of injury.

Side indicator lights *11*

Unclip indicator light ***11*** (using a flat-blade screwdriver or similar).

Turn the bulb holder one quarter-turn and take out the bulb.

Bulb type: W5W.

Take care not to scratch the bodywork.

INTERIOR LIGHTS: changing bulbs (1/2)

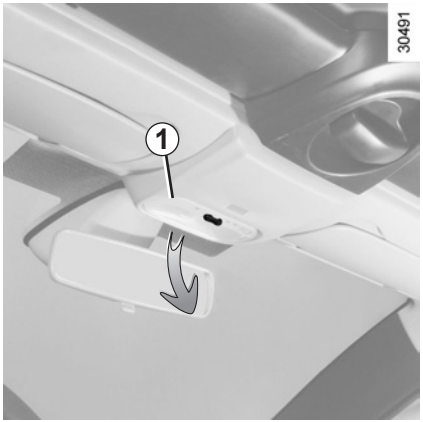

Courtesy light

Unclip lens ***1*** in the direction indicated (using a flat-blade screwdriver or similar).

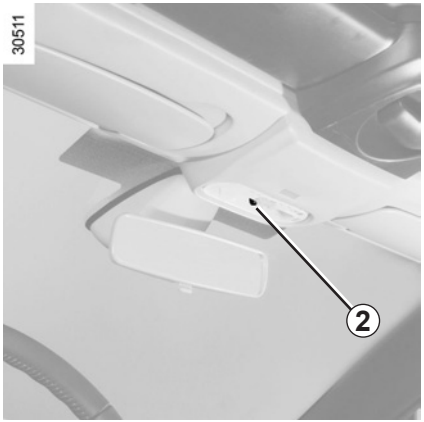

Release bulb ***2***.

Note: to remove the defective bulb, you can use a flat-blade screwdriver or similar.

Bulb type: W5W.

The bulbs are under pressure and can break when replaced.

Risk of injury.

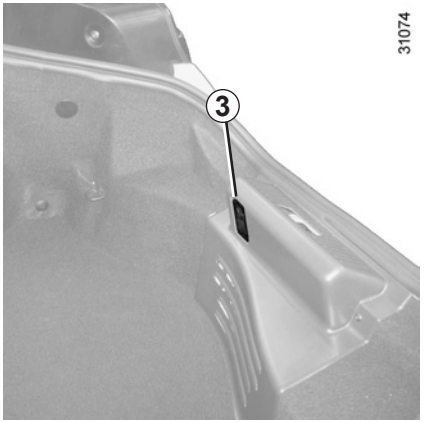

Luggage compartment light *3*

Unclip light ***3*** by pressing the tabs on each side (using a flat-blade screwdriver or similar).

Disconnect the light.

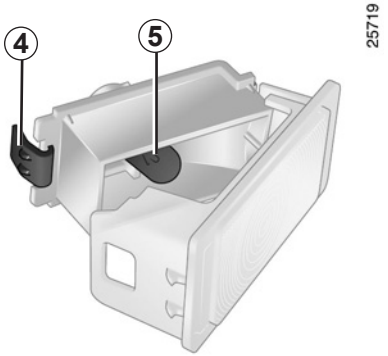

Press tab ***4*** to release the lens and access bulb ***5***.

Bulb type: W5W.

The bulbs are under pressure and can break when replaced.

Risk of injury.

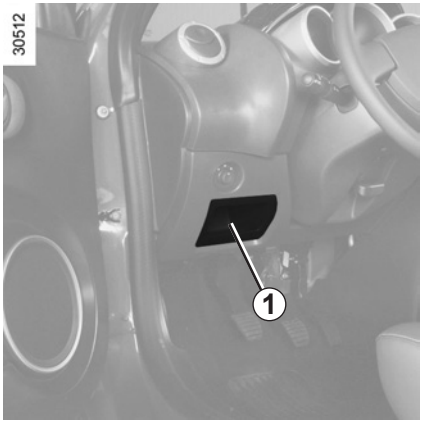

Fuse box

If electrical equipment does not work, check the condition of the fuses.

Depending on the vehicle, remove flap ***1*** or the flap located in storage compartment ***2***.

To identify the fuses, refer to the fuse allocation label (shown on the following pages).

It is not advisable to use the free fuse locations.

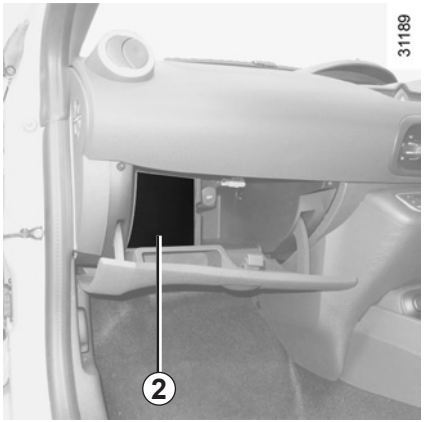

Check the fuse in question and **replace it,** if necessary, **by a fuse of the same rating**.

If a fuse is fitted where the rating is too high, it may cause the electrical circuit to overheat (risk of fire) in the event of an item of equipment using an excessive amount of current.

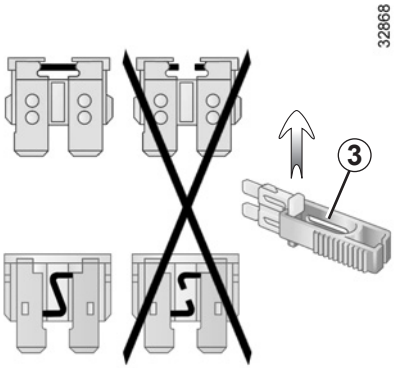

Clip *3*

Remove the fuse using tweezers ***3***, located on the back of cover ***1*** or in glove box ***2***.

To remove the fuse from the tweezers, slide the fuse to the side.

To comply with local legislation, or as a precaution, you can obtain an emergency kit containing a set of spare bulbs and fuses from an approved dealer.

FUSES (2/3)

Allocation of fuses (DEPENDING ON THE EQUIPMENT LEVEL)

Numbers	Allocation
1 and 2	Windscreen wiper.
3	Power-assisted steering.
4	Location reserved for additional equipment.
5	Brake light/Speed limiter.
6	Reversing lights/door mirror control/alarm siren.
7	Air bag.
8	Passenger compartment electrical unit/transponder.
9	Injection/fuel pump.
10	ABS/ASR/ESP

Numbers	Allocation
11	Direction indicator lights/ Diagnostic socket.
12	Power supply/Instrument panel.
13	Dipped beam headlights.
14	Central door locking
15	Side lights.
16	Location reserved for additional equipment.
17	Heated rear screen/Heated door mirrors.
18	Interior lighting/courtesy light/automatic climate control.

Numbers	Allocation
19	Location reserved for additional equipment.
20	Front and rear fog lights.
21	Main beam headlights/ Horn.
22	Location reserved for additional equipment.
23	Electric windows.
24	Location reserved for additional equipment.
25	Dipped beam headlights/ rear fog light.
26	Sunroof.

FUSES (3/3)

Allocation of fuses (DEPENDING ON THE EQUIPMENT LEVEL)

Numbers	Allocation
27	Location reserved for additional equipment.
28	Passenger compartment ventilation.
29	Radio/Passenger compartment electrical unit.
30	Accessories socket.
31	Location reserved for additional equipment.
32	Right-hand main beam headlight.
33	Left-hand main beam headlight.
34	Right-hand dipped beam headlight.
35	Left-hand dipped beam headlight.

Numbers	Allocation
36	Location reserved for additional equipment.
37	Heated door mirrors.
38	Horn.
39	Rear fog lights.
40	Location reserved for additional equipment.
41	Heated seats.
42	Right-hand side light/ accessories socket/cruise control/speed limiter control/central door locking control/hazard warning lights control.

Numbers	Allocation
43	Left-hand side light/number plate light.
44	Location reserved for additional equipment.
45	Diode protection.
46	Location reserved for additional equipment.
47	Location reserved for additional equipment.
48	Radio.

To avoid all risk of sparks:

– Ensure that any electrical consumers (courtesy lights, etc.) are switched off before disconnecting or reconnecting the battery.

– When charging, stop the charger before connecting or disconnecting the battery.

– Do not place metal objects on the battery to avoid creating a short circuit between the terminals.

– Always wait at least one minute after the engine has been switched off before disconnecting a battery.

– Make sure that you reconnect the battery terminals after refitting.

Connecting a battery charger

The battery charger must be compatible with a battery with nominal voltage of 12 volts.

Do not disconnect the battery when the engine is running. **Follow the instructions given by the manufacturer of the battery charger you are using.**

Special procedures may be required to charge some batteries. Contact your approved dealer.

Avoid all risk of sparks which may cause an immediate explosion, and charge the battery in a well-ventilated area. Risk of serious injury.

Handle the battery with care as it contains sulphuric acid, which must not come into contact with eyes or skin. If it does, wash the affected area with plenty of cold water. If necessary, consult a doctor.

Ensure that naked flames, red hot objects and sparks do not come into contact with the battery as there is a risk of explosion.

The engine may be hot when carrying out operations in close proximity. In addition, the engine cooling fan can come on at any moment.

Risk of injury.

Starting the vehicle using the battery from another vehicle

If you have to use the battery from another vehicle to start, obtain suitable jump leads (with a large cross section) from an approved dealer or, if you already have jump leads, ensure that they are in perfect condition.

The two batteries must have an identical nominal voltage of 12 volts. The battery supplying the current should have a capacity (amp-hours, Ah) which is at least the same as that of the discharged battery.

Ensure that there is no risk of contact between the two vehicles (risk of short circuiting when the positive terminals are connected) and that the discharged battery is properly connected. Switch off your vehicle ignition.

Start the engine of the vehicle supplying the current and run it at a moderate speed.

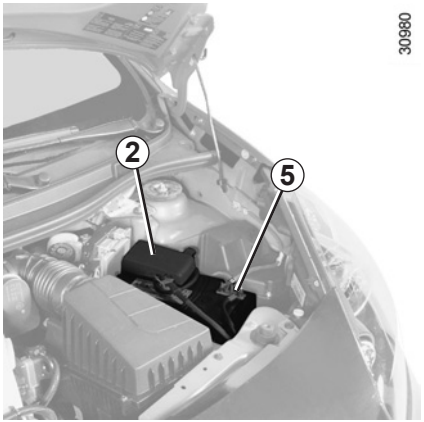

Attach positive lead ***A*** to **mounting *1*** attached to (+) terminal ***2*** then to (+) **terminal *3*** of the battery supplying the current.

Attach the negative lead ***B*** to the (–) **terminal *4*** of the battery supplying the current, then to the (–) **terminal *5*** of the discharged battery.

Start the engine. As soon as it is running, disconnect leads ***A*** and ***B*** in the reverse order **(*5 - 4 - 3 - 2*).**

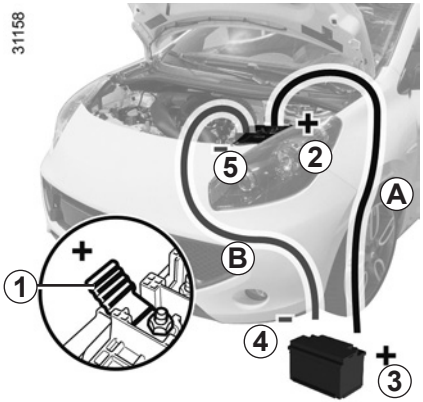

Check that there is no contact between leads ***A*** and ***B*** and that the positive lead ***A*** is not touching any metal parts on the vehicle supplying the current.

Risk of injury and/or damage to the vehicle.

27416

Key, remote controls

Special feature of key *A*

Remove screw ***3***.

Replacing the battery

Open the case at slot ***1*** using a coin, and replace battery ***2***, observing the polarity shown on the back of the cover.

Batteries can be obtained from your approved Dealer.

These batteries should have a service life of approximately two years.

522A

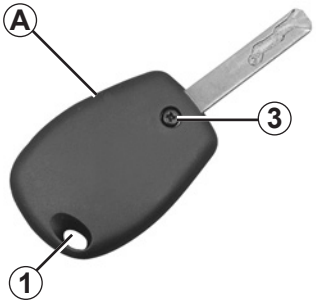

Note: It is not advisable to touch the electrical circuit in the key cover when replacing the battery.

When refitting, ensure that the cover is correctly clipped on and the screw tightened.

Do not dispose of your used batteries in the countryside. Give them to an organisation that collects and recycles used batteries.

522B

26913

Before fitting an electrical or electronic device (particularly for transmitters/receivers: frequency bandwidth, power level, position of the aerial etc.), ensure that it is compatible with your vehicle.

Contact an approved dealer for this information.

Use of transmission/ receiving devices (telephones, CB equipment etc.).

Telephones and CB equipment with integrated aerials may cause interference to the original electronic systems fitted to the vehicle: it is advisable only to use equipment with an external aerial.

Furthermore, we remind you of the need to comply with the legislation in force concerning the use of such equipment.

Fitting after-market accessories

If you wish to install accessories on the vehicle: consult an approved dealer.

Also, to ensure the correct operation of your vehicle, and to avoid any risk to your safety, we recommend that you use only specific accessories, designed for your vehicle, which are the only accessories for which the manufacturer will provide a warranty.

If you are using an anti-theft device, only attach it to the brake pedal.

Electrical and electronic accessories

– Connect accessories with a maximum power of 120 Watts only.

Fire hazard.

– No work may be carried out on the vehicle's electrical or radio circuits, except by approved Dealers: an incorrectly connected system may result in damage being caused to the electrical equipment and/or the components connected to it;

– if the vehicle is fitted with any aftermarket electrical equipment, make sure that the unit is correctly protected by a fuse. Establish the rating and position of this fuse.

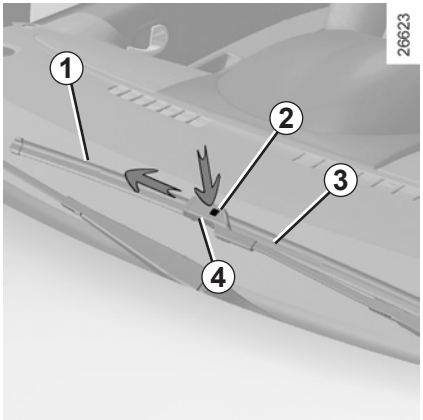

Replacing windscreen wiper blades *1*

– Lift the windscreen wiper arm ***3*** as far as it will go (the arm does not lift up completely);

– press button ***2*** and slide the wiper blade sideways to release hook ***4*** on the wiper arm.

Refitting a windscreen wiper blade

To refit the wiper blade, proceed in reverse order to removal.

Make sure that the blade is correctly locked in position.

Check the condition of the wiper blades. You are responsible for their service life:

– clean the blades and the windscreen regularly with soapy water;

– do not use them when the windscreen is dry;

– free them from the windscreen when they have not been used for a long time.

– In frosty weather, make sure that the wiper blades are not stuck by ice (to avoid the risk of the motor overheating).

– Check the condition of the wiper blades.
Replace the wiper blades as soon as they begin to lose efficiency (approximately once a year).

Whilst changing the blade, take care not to drop the arm onto the window after it has been removed as this may break the window.

TOWING: breakdown

The steering wheel must be unlocked and the ignition key must be in position M (ignition on) to provide brake lights and hazard warning lights on the towed vehicle. At night the vehicle must have its lights on.

You must observe the towing regulations which apply in the country in which you are driving.

Contact an approved dealer.

Only use:

- **At the front, towing hitch *3*** (located in the tool kit).
- **At the rear, towing point *5*.**

These towing points may only be used for pulling the vehicle, never for lifting it either directly or indirectly.

Do not remove the key from the ignition when the vehicle is being towed.

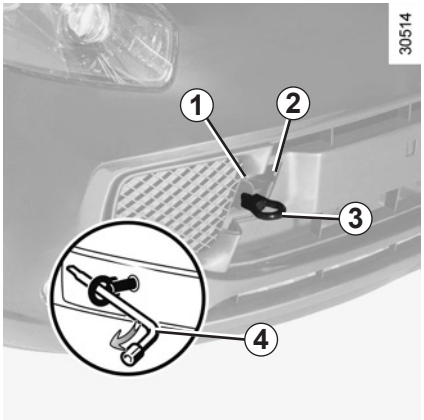

Access to front towing point *1*

Unclip cover ***2***.

Tighten towing hitch *3* fully: first by hand until it stops then finish by locking it with wheelbrace ***4***.

Towing hitch ***3*** and wheelbrace ***4*** are located in the tool kit.

When the engine is stopped, steering and braking assistance are not operational.

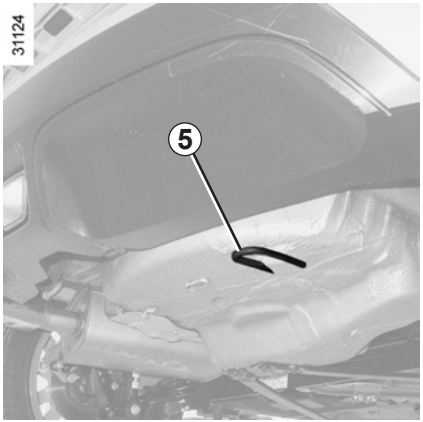

Do not push the vehicle if the steering column is locked.

– The towing hitch must only be used for towing your vehicle.

– It is forbidden to tow other vehicles.

OPERATING FAULTS (1/7)

The following advice will enable you to carry out quick, temporary repairs. For safety reasons you should always contact an approved Dealer as soon as possible.

The starter is activated	POSSIBLE CAUSES	WHAT TO DO
There is no response, the warning lights fail to light up and the starter does not turn.	Battery lead disconnected or terminals corroded.	Check battery terminals: scrape and clean if oxidised and retighten.
	Discharged battery.	Connect another battery to the faulty battery.
	Battery unserviceable.	Replace battery.
Warning lights go dim and starter turns very slowly.	Battery terminals not correctly tightened, oxidised.	Check battery terminals: scrape and clean if oxidised and retighten.
	Discharged battery.	Connect another battery to the faulty battery.
It is difficult to start the engine in wet weather or after washing the vehicle.	Poor ignition, ignition system damp.	Dry the spark plug and coil wires.
The engine is difficult to start when hot.	Faulty carburation (bubbles of vaporised fuel in the circuit).	Let the engine cool down.
	Poor compression.	Consult an approved dealer.

OPERATING FAULTS (2/7)

The starter is activated	POSSIBLE CAUSES	WHAT TO DO
The engine splutters but does start or starts with difficulty when cold.	Incorrect starting procedure. or Poor fuel supply or ignition fault.	Refer to the section entitled “Starting/ stopping the engine”. If the vehicle will not start, do not keep trying to start it. Consult an approved dealer.
	Fuel supply cut-off system activated if vehicle has been subjected to severe impact.	Consult an approved dealer.
Vibrations.	Tyres not inflated to correct pressures, incorrectly balanced or damaged.	Check the tyre pressures: if this is not the problem, have them checked by an approved Dealer.
Smoke under the bonnet.	Short circuit or cooling system leak.	Stop, switch off the ignition, stand away from the vehicle and contact an approved Dealer.

OPERATING FAULTS (3/7)

On the road	POSSIBLE CAUSES	WHAT TO DO
The oil pressure warning light comes on:		
– while turning or braking	The level is too low.	Top up the engine oil (refer to the information on the Engine oil level, topping up/refilling in Section 4).
– at idle speed	Low oil pressure.	Consult the nearest approved Dealer.
– is slow to go out or remains lit on acceleration.	Loss of oil pressure.	Stop the vehicle and contact an approved Dealer.
Loss of engine power.	Clogged air filter.	Replace the filter.
	Fuel supply fault.	Check the fuel level.
	Faulty spark plugs, incorrect electrode gaps.	Consult an approved dealer.
Unstable idle speed or the engine stalls.	Poor compression (spark plugs, ignition, air leak).	Consult an approved dealer.

OPERATING FAULTS (4/7)

On the road	POSSIBLE CAUSES	WHAT TO DO
Steering becomes heavy.	Assistance overheating.	Leave to cool.
	Faulty power-assisted steering.	Consult an approved dealer.
The engine overheats. The coolant temperature warning light comes on (or the indicator needle is in the red area).	Coolant pump: belt stretched or broken. Engine cooling fan not working.	Stop the vehicle, switch off the engine and contact an approved Dealer.
	Coolant leaks.	Check the condition of hoses and the tightness of the clips. Check the expansion bottle: it should contain coolant. If it does not, top it up **(once it has cooled)**. Take care not to scald yourself. This action is only temporary; consult your approved Dealer as soon as possible.

Radiator: If there is a significant lack of coolant, remember that it must never be topped up using cold coolant while the engine is very warm. After any procedure on the vehicle which has involved even partial draining of the cooling system, it must be refilled with a new mixture prepared in the correct proportions. Reminder: only products approved by our Technical Department may be used for this purpose.

OPERATING FAULTS (5/7)

Electrical equipment	POSSIBLE CAUSES	WHAT TO DO
The wipers do not work.	Wiper blades stuck.	Free the blades before using the wipers.
	Faulty electrical circuit.	Consult an approved dealer.
The wiper does not stop.	Faulty electrical controls.	Consult an approved dealer.
Direction indicators flashing more quickly.	Bulb blown.	Refer to the information on “Headlights: changing bulbs” or “Rear and side lights: changing bulbs” in Section 5.
The direction indicators do not work.	Faulty electrical circuit.	Consult an approved dealer.
The headlights do not switch on or off.	Faulty electrical circuit or control.	Consult an approved dealer.
Traces of condensation in the lights.	This is not a fault. The presence of traces of condensation in lights is a natural phenomenon linked to variations in temperature. These traces soon disappear when the lights are switched on.	

OPERATING FAULTS (6/7)

Rotating hard roof	POSSIBLE CAUSES	WHAT TO DO
The luggage compartment lid will not open	Rotating hard roof not locked.	Lock the rotating hard roof; refer to the information on the “Rotating hard roof: opening/closing” in Section 3.
The roof will not open or close.	Roof opening conditions not fulfilled.	Apply the opening conditions (refer to the information on the “Rotating hard roof” in Section 3).
	Roof fault. Electrical fault (discharged battery, etc.).	Leave the roof closed or close it using the methods described in “Rotating hard roof: operating fault” in Section 3 and consult your approved dealer.
	The roof and the cover have been left in the intermediate position for too long.	Finish the cycle manually and use the method described in the paragraph “Rotating hard roof: operating fault” in Section 3, if required.

OPERATING FAULTS (7/7)

Rotating hard roof	POSSIBLE CAUSES	WHAT TO DO
The message “ROOF: READ HANDBOOK” appears.	Roof opening fault.	Lock the roof then unlock it without lifting it.
	Exterior temperature too low (below -10°C).	The system does not open, to prevent damage.
	Roof in thermal protection mode (too many successive operations).	Allow the system to cool for a few minutes before using it again.
The message “CHECK ROOF” appears continually or when the roof’s open/close switch is pressed.	Roof fault.	Consult an approved dealer.

Section 6: Technical specifications

Vehicle identification plates 6.2
Dimensions 6.4
Engine specifications 6.5
Weights 6.6
Towing weights 6.6
Replacement parts and repairs 6.7
Service sheets 6.8
Anti-corrosion check 6.14

VEHICLE IDENTIFICATION PLATES

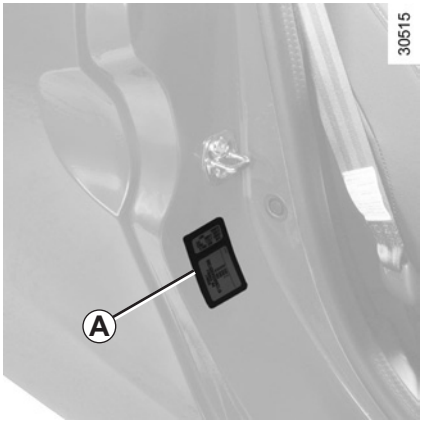

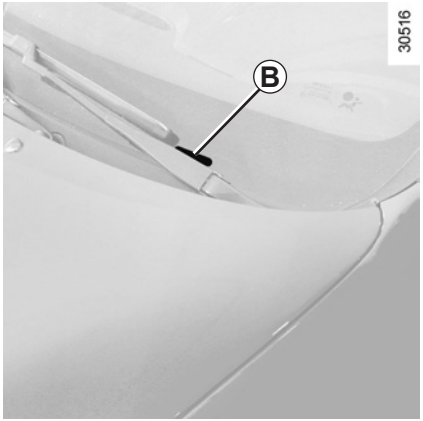

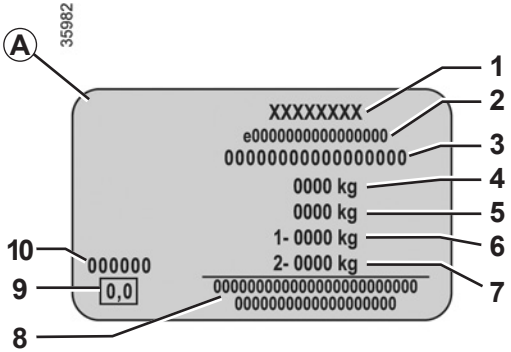

The information shown on the vehicle identification plate should be quoted on all correspondence or orders.

The presence and location of the information depends on the vehicle.

Vehicle identification plate *A*

1 Manufacturer name.
2 EC design number or approval number.
3 Identification number.
Depending on the vehicle, this information is also given on marking *B*.
4 MAM (Maximum Authorised Mass) for front axle.
5 GTW (Gross train weight: vehicle fully loaded, with trailer).
6 MPAW (Maximim Permissible Weight) for front axle.
7 MPAW on rear axle.
8 Reserved for related or additional entries.
9 Diesel exhaust emissions.
10 Paint reference (colour code).

ENGINE IDENTIFICATION PLATES

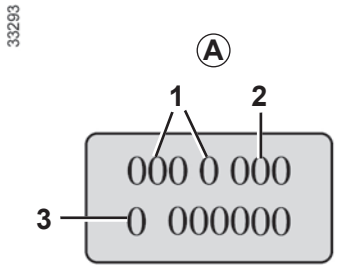

Please quote the information on the engine plate or label *A* in all correspondence or orders.
(Location varies depending on engine)

1 Engine type.
2 Engine suffix.
3 Engine number.

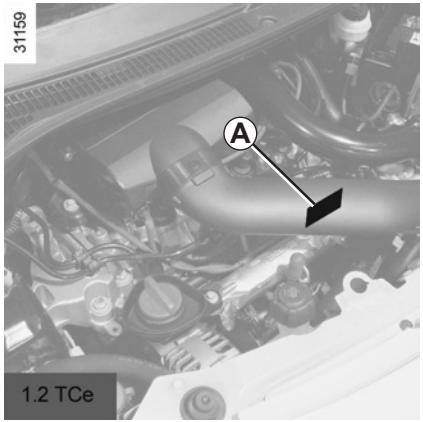

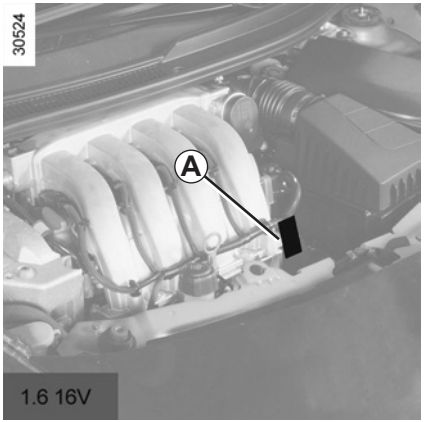

DIMENSIONS (in metres)

31188

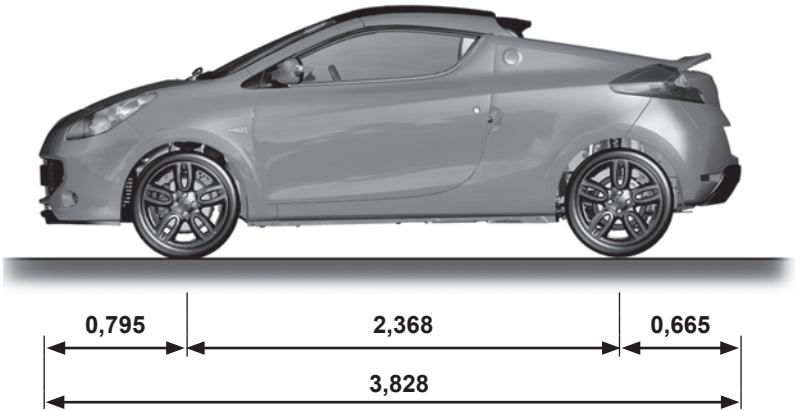

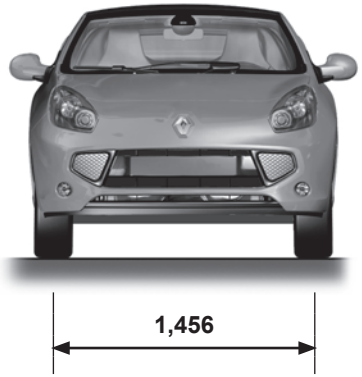

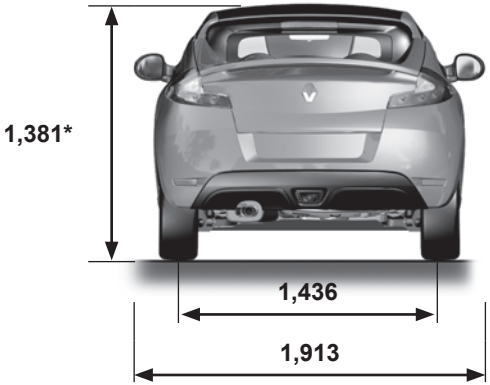

* Unladen

ENGINE SPECIFICATIONS

Versions	1.2 Tce	1.6 16V
Engine type (see engine plate)	D4Ft	K4M
Cubic capacity (cc)	1,149	1,598
Type of fuel Octane Rating	It is **essential** that you use unleaded petrol of the octane rating stated on the label inside the fuel filler flap. If not available, for a limited time only, use unleaded fuel: – with an octane rating of 91 for a label showing 95 or 98; – with an octane rating of 87 for a label showing 91, 95 or 98.	
Spark plugs	Only use the spark plugs specified for your vehicle's engine. The type should be marked on a label affixed inside the engine compartment. If it is not then contact your approved dealer. Fitting spark plugs which are not to specification may damage the engine.	

WEIGHTS (in kg)

The weights indicated for a basic vehicle without options: they vary depending on the your vehicle's equipment. Consult your approved Dealer.

Maximum permissible all-up weight (MMAC) **Total train weight (MTR)**	Weights are indicated on the vehicle identification plate (refer to the information on "Vehicle identification plates" in Section 6)
Braked trailer weight	Prohibited
Unbraked trailer weight	Prohibited
Permissible nose weight	Prohibited
Maximum permissible load on roof	Prohibited
Maximum permissible load on the tailgate	Prohibited

REPLACEMENT PARTS AND REPAIRS

Original parts are based on strict specifications and are subject to highly-specialised tests. Therefore, they are of at least the same level of quality as the parts fitted originally.

If you always fit genuine replacement parts to your vehicle, you will ensure that it performs well. Furthermore, repairs carried out within the manufacturer's Network using original parts are guaranteed according to the conditions set out on the reverse of the repair order.

SERVICE SHEETS (1/6)

VIN: .....

Date: Miles (km):	Invoice number:	Comments/miscellaneous
Type of operation: Service □ ..... □ **Anticorrosion check:** OK □ Not OK* □ *See specific page	**Stamp**	

Date: Miles (km):	Invoice number:	Comments/miscellaneous
Type of operation: Service □ ..... □ **Anticorrosion check:** OK □ Not OK* □ *See specific page	**Stamp**	

Date: Miles (km):	Invoice number:	Comments/miscellaneous
Type of operation: Service □ ..... □ **Anticorrosion check:** OK □ Not OK* □ *See specific page	**Stamp**	

SERVICE SHEETS (2/6)

VIN: .....

Date: Miles (km):	Invoice number:	Comments/miscellaneous
Type of operation: Service □ ..... □ **Anticorrosion check:** OK □ Not OK* □ *See specific page	**Stamp**	

Date: Miles (km):	Invoice number:	Comments/miscellaneous
Type of operation: Service □ ..... □ **Anticorrosion check:** OK □ Not OK* □ *See specific page	**Stamp**	

Date: Miles (km):	Invoice number:	Comments/miscellaneous
Type of operation: Service □ ..... □ **Anticorrosion check:** OK □ Not OK* □ *See specific page	**Stamp**	

SERVICE SHEETS (3/6)

VIN: .....

Date: Miles (km):	Invoice number:	Comments/miscellaneous
Type of operation: Service □ ..... □ **Anticorrosion check:** OK □ Not OK* □ *See specific page	**Stamp**	

Date: Miles (km):	Invoice number:	Comments/miscellaneous
Type of operation: Service □ ..... □ **Anticorrosion check:** OK □ Not OK* □ *See specific page	**Stamp**	

Date: Miles (km):	Invoice number:	Comments/miscellaneous
Type of operation: Service □ ..... □ **Anticorrosion check:** OK □ Not OK* □ *See specific page	**Stamp**	

SERVICE SHEETS (4/6)

VIN: .....

Date: Miles (km):	Invoice number:	Comments/miscellaneous
Type of operation: Service □ ..... □ **Anticorrosion check:** OK □ Not OK* □ *See specific page	**Stamp**	

Date: Miles (km):	Invoice number:	Comments/miscellaneous
Type of operation: Service □ ..... □ **Anticorrosion check:** OK □ Not OK* □ *See specific page	**Stamp**	

Date: Miles (km):	Invoice number:	Comments/miscellaneous
Type of operation: Service □ ..... □ **Anticorrosion check:** OK □ Not OK* □ *See specific page	**Stamp**	

SERVICE SHEETS (5/6)

VIN: .....

Date: Miles (km):	Invoice number:	Comments/miscellaneous
Type of operation: Service □ ..... □ **Anticorrosion check:** OK □ Not OK* □ *See specific page	**Stamp**	

Date: Miles (km):	Invoice number:	Comments/miscellaneous
Type of operation: Service □ ..... □ **Anticorrosion check:** OK □ Not OK* □ *See specific page	**Stamp**	

Date: Miles (km):	Invoice number:	Comments/miscellaneous
Type of operation: Service □ ..... □ **Anticorrosion check:** OK □ Not OK* □ *See specific page	**Stamp**	

SERVICE SHEETS (6/6)

VIN: .....

Date: Miles (km):	Invoice number:	Comments/miscellaneous
Type of operation: Service □ ..... □ **Anticorrosion check:** OK □ Not OK* □ *See specific page	**Stamp**	

Date: Miles (km):	Invoice number:	Comments/miscellaneous
Type of operation: Service □ ..... □ **Anticorrosion check:** OK □ Not OK* □ *See specific page	**Stamp**	

Date: Miles (km):	Invoice number:	Comments/miscellaneous
Type of operation: Service □ ..... □ **Anticorrosion check:** OK □ Not OK* □ *See specific page	**Stamp**	

ANTICORROSION CHECK (1/5)

If the continuation of the warranty is subject to repair, it is indicated below.

VIN: .....

Corrosion repair operation to be carried out: Date of repair:	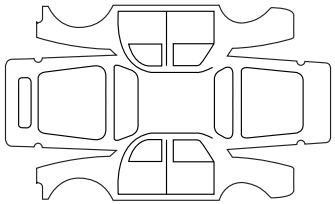	**Stamp**
Repair to be carried out: Date of repair:	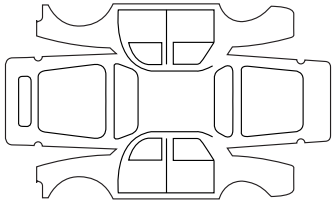	**Stamp**
Repair to be carried out: Date of repair:	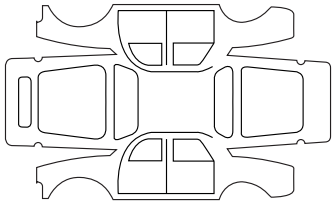	**Stamp**

ANTICORROSION CHECK (2/5)

If the continuation of the warranty is subject to repair, it is indicated below.

VIN: .....

Corrosion repair operation to be carried out: Date of repair:		**Stamp**
Repair to be carried out: Date of repair:		**Stamp**
Repair to be carried out: Date of repair:		**Stamp**

ANTICORROSION CHECK (3/5)

If the continuation of the warranty is subject to repair, it is indicated below.

VIN: .....

Corrosion repair operation to be carried out: Date of repair:		**Stamp**
Repair to be carried out: Date of repair:		**Stamp**
Repair to be carried out: Date of repair:		**Stamp**

ANTICORROSION CHECK (4/5)

If the continuation of the warranty is subject to repair, it is indicated below.

VIN: .....

Corrosion repair operation to be carried out: Date of repair:		**Stamp**
Repair to be carried out: Date of repair:		**Stamp**
Repair to be carried out: Date of repair:		**Stamp**

ANTICORROSION CHECK (5/5)

If the continuation of the warranty is subject to repair, it is indicated below.

VIN: .....

Corrosion repair operation to be carried out: Date of repair:		**Stamp**
Repair to be carried out: Date of repair:		**Stamp**
Repair to be carried out: Date of repair:		**Stamp**

ALPHABETICAL INDEX (1/4)

A

ABS ....1.35, 2.10 → 2.12
accessories....5.25
accessories socket 3.23
additional methods of restraint ....1.15 → 1.17, 1.19
side protection 1.18
to the front seat belts ....1.15 → 1.17
adjusting your driving position 1.12
air bag....1.15 → 1.19, 1.35
air conditioning ....3.8 → 3.18
air vents ....3.6 – 3.7
anti-corrosion check ....6.14 → 6.18
anti-corrosion protection ....4.12 – 4.13
anti-lock braking system: ABS ....2.10 → 2.12
antipollution
advice ....2.6 → 2.8
armrest:
front....3.22
ashtray....3.23
ASR (traction control) ....2.10 → 2.12
audible and visual signals....1.51

B

batteries....5.24
battery....4.11
troubleshooting ....5.22 – 5.23
bonnet....4.2 – 4.3
brake fluid 4.8
bulbs
changing ....5.14 → 5.16

C

catalytic converter....2.4
central door locking 1.5, 1.10
changing a bulb ....5.14 → 5.16
changing a wheel....5.7 – 5.8
changing gear....2.5
child restraint/seat ....1.20 – 1.21, 1.23 → 1.26
child safety....1.2 – 1.3, 1.20 – 1.21, 1.23 → 1.26, 3.19
child seats....1.20 – 1.21, 1.23 → 1.26
children ....1.2 – 1.3, 1.6 – 1.7, 1.20 – 1.21
children (safety)....3.19
cigar lighter 3.23
cleaning:
inside the vehicle ....4.14 – 4.15
outside the vehicle ....4.12 – 4.13
clock 1.49
closing the doors ....1.6 – 1.7
control instruments ....1.34 → 1.40
controls ....1.30 → 1.33
coolant 1.38, 4.7
courtesy light ....3.20, 5.17 – 5.18
courtesy mirrors....3.20
cruise control ....2.13 → 2.19
cruise control-speed limiter....2.13 → 2.19

D

dashboard....1.30 → 1.33
daytime running lights....1.52
demisting
rear screen....3.9
dimensions 6.4
display ....1.34 → 1.39
doors....1.6 – 1.7, 1.10
doors/tailgate ....1.6 – 1.7, 1.10
driver's position ....1.30 → 1.37
driving ....2.2, 2.4 → 2.8, 2.10 → 2.19
driving position
settings ....1.12 → 1.14

E

electric windows 3.19

Electronic Stability Program: ESP .....2.10 → 2.12
emergency brake assist.....2.10 → 2.12
emergency braking .....2.10 → 2.12
emergency spare wheel 5.2, 5.6
engine oil .....4.4 → 4.6
engine oil capacity ..... 4.5 – 4.6
engine oil level.....4.4 → 4.6
environment..... 2.9
ESP: Electronic Stability Program .....2.10 → 2.12
external temperature 1.49

F
faults
operating faults .....5.28 → 5.34
filter
air filter 2.6, 4.9
diesel filter..... 2.6, 4.9
oil filter 4.6, 4.9
passenger compartment filter 4.9
fittings ..... 3.21 – 3.22
front seat adjustment..... 1.11
front seats
adjustment .....1.11 → 1.14
with manual controls 1.11
fuel
advice on fuel economy .....2.6 → 2.8
capacity..... 1.56
filling..... 1.56 – 1.57
grade..... 1.56 – 1.57
fuel economy .....2.6 → 2.8
fuel filler cap ..... 1.56 – 1.57
fuel level 1.38
fuel tank
capacity..... 1.56 – 1.57
fuel tank capacity..... 1.56 – 1.57
fuses .....5.19 → 5.21

G
gear lever..... 2.5

H
handbrake..... 1.34, 2.5
hands-free telephone integrated control..... 3.26
hazard warning lights signal ..... 1.51 – 1.52
headlight flashers 1.51
heating and air conditioning system 3.18
heating system .....3.8 → 3.18
horn 1.51
horn:
flash 1.51
sounding the horn 1.51
hubcap tool..... 5.6

I
ignition switch 2.2
indicators 1.34, 1.51
indicators:
direction indicators..... 1.51, 5.14
exterior temperature indicator..... 1.49
instrument panel .....1.34 → 1.40
instrument panel.....1.34 → 1.40, 1.52
instrument panel messages..... 1.40
interior trim
maintenance ..... 4.14 – 4.15

J
jack 5.6

K
keys .....1.2 → 1.4

L
levels:
brake fluid 4.8
coolant 1.38, 4.7
fuel 1.38
windscreen washer reservoir 4.9
lifting the vehicle
changing a wheel ..... 5.7 – 5.8
lighting:
exterior ..... 1.52 – 1.53
instrument panel 1.52
interior ..... 3.20, 5.17 – 5.18
lights
mobile directional 1.53
lights:
brake lights 5.14
dipped beam headlights 1.34, 1.52
direction indicators 1.34, 1.51, 5.14
fog lights 1.34, 5.14
hazard warning 1.51
main beam headlights 1.34, 1.53
number plate lights 5.15
reversing lights 5.14
side lights 1.52, 5.14
locking the doors ..... 1.2 → 1.7, 1.10

M
maintenance 2.6
maintenance:
bodywork ..... 4.12 – 4.13
interior trim ..... 4.14 – 4.15
mechanical ..... 4.2 – 4.3, 6.8 → 6.13
mileage before service ..... 6.8 → 6.13
map reading lights 3.20
methods of restraint in addition to the front seat belts ..... 1.15 → 1.17
methods of restraint in addition to the seat belts ... 1.15 → 1.19
multimedia equipment 3.26

N
navigation 3.26
navigation system 3.26

O
oil change ..... 4.4 → 4.6
opening the doors ..... 1.6 – 1.7
operating faults ..... 1.34 → 1.37, 5.28 → 5.34

P
paintwork
maintenance ..... 4.12 – 4.13
reference 6.2
power-assisted steering 1.48
practical advice ..... 2.6 → 2.8, 5.28 → 5.34
pretensioners 1.15
puncture ..... 5.2, 5.6 → 5.8

R
radio 3.26
rear screen
demisting 3.9
rear screen de-icing/demisting 3.15
rear view mirrors 1.50
RENAULT ANTI-INTRUDER DEVICE (RAID) 1.10
replacement parts 6.7
reverse gear
selecting 2.5
running in 2.2

S
seat belt pretensioners ..... 1.15 → 1.17
seat belts ..... 1.12 → 1.19

see-me-home lighting 1.53
service sheets..... 6.8 → 6.13
side indicator lights
changing bulbs..... 5.15
side protection devices 1.18
signals and lights ..... 1.52 – 1.53
special features of petrol vehicles 2.4
speed limiter ..... 2.13 → 2.15
starting the engine 2.3
steering wheel
adjustment 1.48
storage compartment..... 3.21 – 3.22
storage compartments..... 3.21 – 3.22
sun visor 3.20
sunroof..... 3.19

T

tailgate 3.24
tanks and reservoirs
brake fluid 4.8
coolant 4.7
tanks and reservoirs:
windscreen washer 4.9
technical specifications..... 6.2 → 6.4, 6.6 – 6.7
telephone..... 3.26
temperature regulation ..... 3.12 → 3.18
tool kit 5.6
towing
breakdown 5.27
towing equipment..... 3.25
towing a caravan 3.25, 6.6
towing equipment
fitting 3.25
towing hitch..... 5.27
towing rings 1.21, 1.23, 3.25
towing weights 6.6
traction control: ASR..... 2.10 → 2.12
transporting children ..... 1.20 – 1.21, 1.23 → 1.26
transporting objects
in the luggage compartment 3.25
trims..... 5.6
trip computer and warning system..... 1.34 → 1.37, 1.40
tyre inflation kit..... 5.3 → 5.5
tyre pressure..... 4.10, 5.10
tyre pressures..... 4.10
tyres..... 2.8, 4.10, 5.9 → 5.11

V

variable power-assisted steering 1.35
vehicle identification ..... 6.2 – 6.3
vehicle identification plates..... 6.2 – 6.3
ventilation ..... 3.8 → 3.18

W

warning buzzer 1.6, 1.51, 1.53
warning lights..... 1.34 → 1.37, 1.40
washing ..... 4.12 – 4.13
weights 6.6
wheelbrace 5.6
wheels (safety) ..... 5.9 → 5.11
windscreen de-icing/demisting 3.15
windscreen washer..... 1.54 – 1.55, 4.9
windscreen washer/wiper ..... 1.54 – 1.55
wiper blades 5.26
wipers ..... 1.54 – 1.55
blades 5.26

(www.e-guide.renault.com)

RENAULT S.A.S. SOCIÉTÉ PAR ACTIONS SIMPLIFIÉE AU CAPITAL DE 533 941 113 € / 13-15, QUAI LE GALLO
92100 BOULOGNE-BILLANCOURT R.C.S. NANTERRE 780 129 987 — SIRET 780 129 987 03591 / TÉL. : 0810 40 50 60
NU 865-6 – 99 91 022 19R – 11/2012 – Edition anglaise

52