Owner's Identification

OWNER _____

_____

ADDRESS _____
STREET

_____ _____ _____
CITY STATE/PROVINCE/TERRITORY ZIP CODE/ POSTAL CODE

V. I. N. _____

DELIVERY DATE _____
(Date sold to original retail purchaser)

DEALER NAME _____ DEALER NO. _____

ADDRESS _____
STREET

_____ _____ _____
CITY STATE/PROVINCE/TERRITORY ZIP CODE/ POSTAL CODE

OWNER'S SIGNATURE _____

DEALER'S SIGNATURE _____

This owner's manual should be considered a permanent part of the vehicle and should remain with the vehicle when it is sold.

This owner's manual covers all models of the Insight. You may find descriptions of equipment and features that are not on your particular model.

Images throughout this owner's manual (including the front cover) represent features and equipment that are available on some, but not all, models. Your particular model may not have some of these features.

The information and specifications included in this publication were in effect at the time of approval for printing. Honda Motor Co., Ltd. reserves the right, however, to discontinue or change specifications or design at any time without notice and without incurring any obligation whatsoever.

Congratulations! Your selection of a 2012 Honda Insight was a wise investment. It will give you years of driving pleasure.

One of the best ways to enhance the enjoyment of your new vehicle is to read this manual. In it, you will learn how to operate its driving controls and convenience items. Afterwards, keep this owner's manual in your vehicle so you can refer to it at any time.

Several warranties protect your new vehicle. Read the warranty booklet thoroughly so you understand the coverages and are aware of your rights and responsibilities.

Maintaining your vehicle according to the Maintenance Minder™ shown in the instrument panel helps to keep your driving trouble-free while it preserves your investment. When your vehicle needs maintenance, keep in mind that your dealer's staff is specially trained in servicing the many systems unique to your vehicle. Your dealer is dedicated to your satisfaction and will be pleased to answer any questions and concerns.

As you read this manual, you will find information that is preceded by a NOTICE symbol. This information is intended to help you avoid damage to your vehicle, other property, or the environment.

Event Data Recorders

This vehicle is equipped with an event data recorder (EDR).
The main purpose of an EDR is to record, in certain crash or near crash-like situations, such as an air bag deployment or hitting a road obstacle, data that will assist in understanding how a vehicle's systems performed. The EDR is designed to record data related to vehicle dynamics and safety systems for a short period of time, typically 30 seconds or less. The EDR in this vehicle is designed to record such data as:

- How various systems in your vehicle were operating;
- Whether or not the driver and passenger safety belts were buckled/fastened;
- How far (if at all) the driver was depressing the accelerator and/or brake pedal; and,
- How fast the vehicle was traveling.

These data can help provide a better understanding of the circumstances in which crashes and injuries occur.
NOTE: EDR data are recorded by your vehicle only if a non-trivial crash situation occurs; no data are recorded by the EDR under normal driving conditions and no personal data (e.g., name, gender, age, and crash location) are recorded. However, other parties, such as law enforcement, could combine the EDR data with the type of personally identifying data routinely acquired during a crash investigation.

To read data recorded by an EDR, special equipment is required, and access to the vehicle or the EDR is needed. In addition to the vehicle manufacturer, other parties, such as law enforcement, that have the special equipment, can read the information if they have access to the vehicle or the EDR.

The data belongs to the vehicle owner and may not be accessed by anyone else except as legally required or with the permission of the vehicle owner.

Your safety, and the safety of others, is very important. And operating this vehicle safely is an important responsibility.

To help you make informed decisions about safety, we have provided operating procedures and other information on labels and in this manual. This information alerts you to potential hazards that could hurt you or others.

Of course, it is not practical or possible to warn you about all the hazards associated with operating or maintaining your vehicle. You must use your own good judgement.

You will find this important safety information in a variety of forms, including:

- **Safety Labels** — on the vehicle.
- **Safety Messages** — preceded by a safety alert symbol ⚠ and one of three signal words: **DANGER**, **WARNING**, or **CAUTION**. These signal words mean:

⚠ DANGER	You WILL be KILLED or SERIOUSLY HURT if you don't follow instructions.
⚠ WARNING	You CAN be KILLED or SERIOUSLY HURT if you don't follow instructions.
⚠ CAUTION	You CAN be HURT if you don't follow instructions.

- **Safety Headings** — such as Important Safety Reminders or Important Safety Precautions.
- **Safety Section** — such as Driver and Passenger Safety.
- **Instructions** — how to use this vehicle correctly and safely.

This entire book is filled with important safety information — please read it carefully.

Contents

Your Vehicle at a Glance (main controls) 3

Driver and Passenger Safety (seat belts, SRS, and child protection) 5

Instruments and Controls (indicators, gauges, multi-information display, dashboard, and steering column) 59

Features (climate control, audio, steering wheel, security, cruise control, and other convenience items) 163

Before Driving (fuel, vehicle break-in, and cargo loading) 245

Driving (engine and transmission operation) 263

Maintenance (minder, fluid checking, minor services, and vehicle storage) 299

Taking Care of the Unexpected (flat tire, jump starting, overheating, and fuses) 349

Technical Information (vehicle specifications, tires, and emissions controls) 379

Warranty and Customer Relations (U.S. and Canada only) (warranty and contact information) 395

Authorized Manuals (U.S. only) (how to order) 399

Index I

Service Information Summary (fluid capacities and tire pressures) ..... last page

Overview of Contents

Contents
A convenient reference to the sections in this manual.

Your Vehicle at a Glance
A quick reference to the main controls in your vehicle.

Driver and Passenger Safety
Important information about the proper use and care of your vehicle's seat belts, an overview of the supplemental restraint system, and valuable information on how to protect children with child restraints.

Instruments and Controls
Explains the purpose of each instrument panel indicator and gauge, the multi-information display, and how to use the controls on the dashboard and steering column.

Features
How to operate the climate control system, the audio system, and other convenience features.

Before Driving
What gasoline to use, how to break-in your new vehicle, and how to load luggage and other cargo.

Driving
The proper way to start the engine, shift the transmission, and park.

Maintenance
The Maintenance Minder™ shows you when you need to take your vehicle to the dealer for maintenance service. There is also a list of things to check and instructions on how to check them.

Taking Care of the Unexpected
This section covers several problems motorists sometimes experience, and details how to handle them.

Technical Information
ID numbers, dimensions, capacities, and technical information.

Warranty and Customer Relations (U.S. and Canada only)
A summary of the warranties covering your new vehicle, and how to contact us for any reason. Refer to your warranty manual for detailed information.

Authorized Manuals (U.S. only)
How to order manuals and other technical literature.

Index

Service Information Summary
A summary of the information you need when you pull up to the fuel pump.

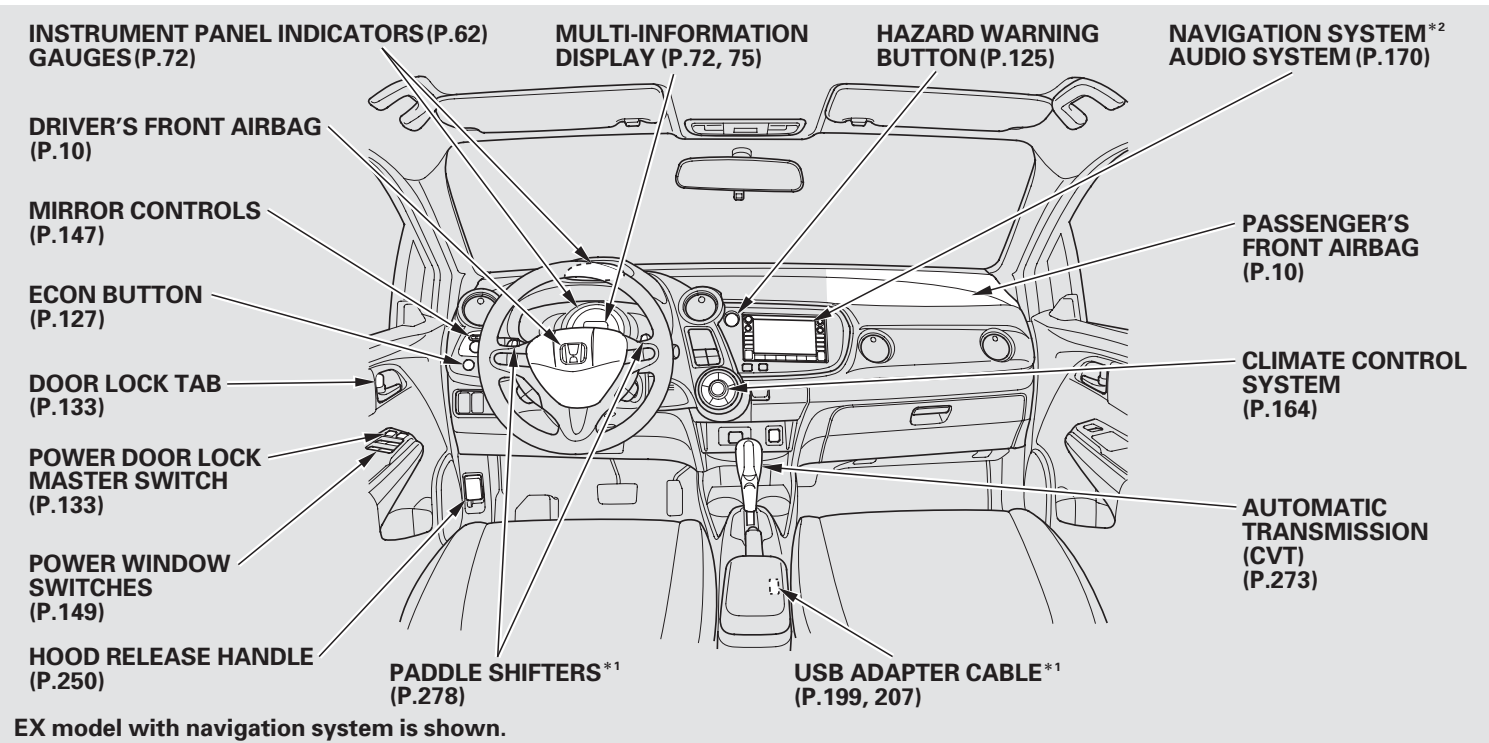

EX model with navigation system is shown.

*1 : If equipped
*2 : Refer to the navigation system manual.

CONTINUED

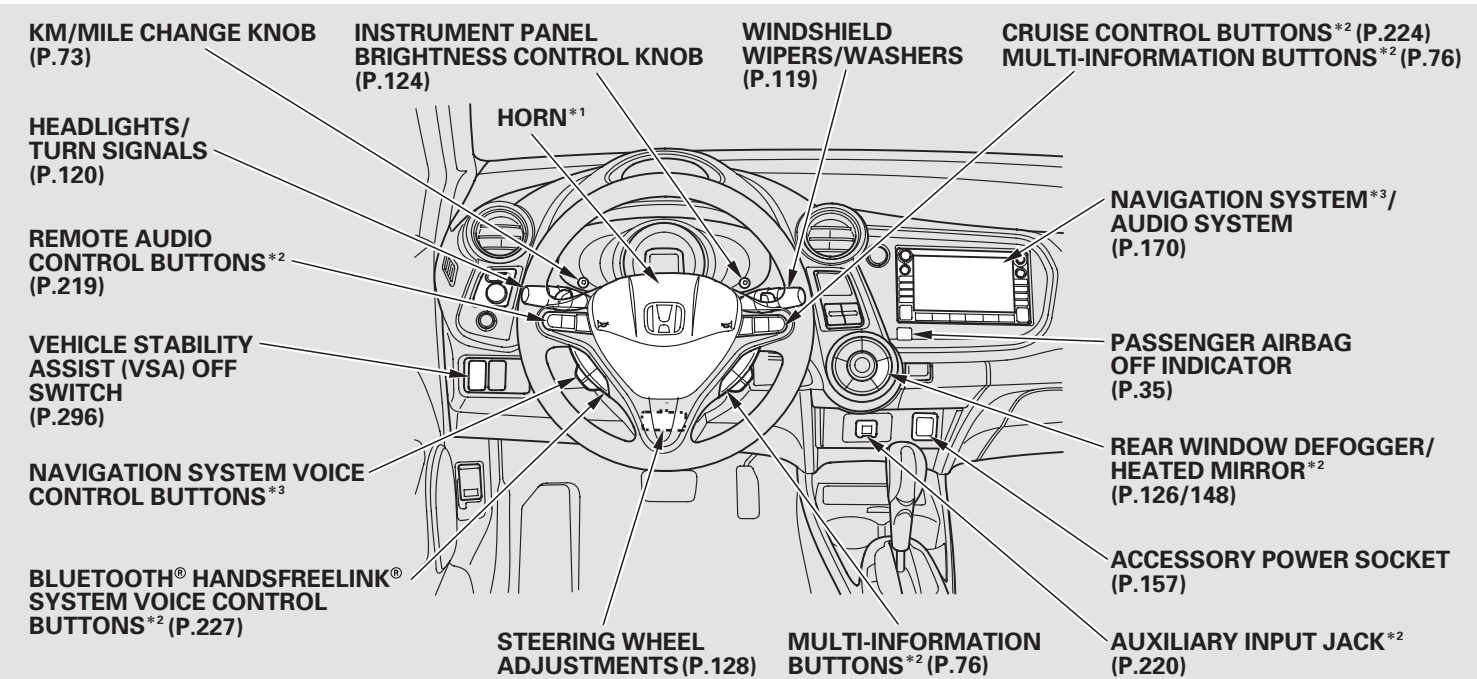

EX model with navigation system is shown.

*1 : To use the horn, press the center pad of the steering wheel.
*2 : If equipped
*3 : Only on vehicles equipped with navigation system. Refer to the navigation system manual.

This section gives you important information about how to protect yourself and your passengers. It shows you how to use seat belts. It explains how your airbags work. And it tells you how to properly restrain infants and children in your vehicle.

Important Safety Precautions 6
Your Vehicle's Safety Features..... 8
Seat Belts 9
Airbags 10
Protecting Adults and Teens..... 12
1. Close and Lock the Doors 12
2. Adjust the Front Seats 14
3. Adjust the Seat-Backs 15
4. Adjust the Head Restraints 16
5. Fasten and Position the Seat Belts 17
6. Maintain a Proper Sitting Position 18
Advice for Pregnant Women..... 19
Additional Safety Precautions.... 20
Additional Information About Your Seat Belts 21
Seat Belt System Components... 21
Lap/Shoulder Belt 22
Automatic Seat Belt Tensioners 23
Seat Belt Maintenance 24
Additional Information About Your Airbags 25
Airbag System Components..... 25
How Your Front Airbags Work..... 28
How Your Side Airbags Work.... 32
How Your Side Curtain Airbags Work..... 33
How the SRS Indicator Works... 34
How the Side Airbag Off Indicator Works 34
How the Passenger Airbag Off Indicator Works 35
Airbag Service 36
Additional Safety Precautions.... 37
Protecting Children—General Guidelines 38
All Children Must Be Restrained 38
All Children Should Sit in a Back Seat 39
The Passenger's Front Airbag Can Pose Serious Risks 39
If You Must Drive with Several Children 41
If a Child Requires Close Attention 41
Additional Safety Precautions.... 42
Protecting Infants and Small Children 43
Protecting Infants 43
Protecting Small Children 44
Selecting a Child Seat..... 45
Installing a Child Seat 46
With LATCH 47
With a Lap/Shoulder Belt 49
With a Tether 51
Protecting Larger Children 52
Checking Seat Belt Fit 52
Using a Booster Seat 53
When Can a Larger Child Sit in Front..... 54
Additional Safety Precautions.... 55
Carbon Monoxide Hazard 56
Safety Labels 57

Important Safety Precautions

You'll find many safety recommendations throughout this section, and throughout this manual. The recommendations on this page are the ones we consider to be the most important.

Always Wear Your Seat Belt
A seat belt is your best protection in all types of collisions. Airbags are designed to supplement seat belts, not replace them. So even though your vehicle is equipped with airbags, make sure you and your passengers always wear your seat belts, and wear them properly (see page 17).

Restrain All Children
Children age 12 and under should ride properly restrained in a back seat, not the front seat. Infants and small children should be restrained in a child seat. Larger children should use a booster seat and a lap/shoulder belt until they can use the belt properly without a booster seat (see pages 38 — 55).

Be Aware of Airbag Hazards
While airbags can save lives, they can cause serious or fatal injuries to occupants who sit too close to them, or are not properly restrained. Infants, young children, and short adults are at the greatest risk. Be sure to follow all instructions and warnings in this manual.

Don't Drink and Drive
Alcohol and driving don't mix. Even one drink can reduce your ability to respond to changing conditions, and your reaction time gets worse with every additional drink. So don't drink and drive, and don't let your friends drink and drive, either.

Pay Appropriate Attention to the Task of Driving Safely
Engaging in mobile phone conversation or other activities that keep you from paying close attention to the road, other vehicles and pedestrians could lead to a crash. Remember, situations can change quickly, and only you can decide when it is safe to divert attention away from driving.

Control Your Speed
Excessive speed is a major factor in crash injuries and deaths. Generally, the higher the speed, the greater the risk, but serious injuries can also occur at lower speeds. Never drive faster than is safe for current conditions, regardless of the maximum speed posted.

Keep Your Vehicle in Safe Condition
Having a tire blowout or a mechanical failure can be extremely hazardous. To reduce the possibility of such problems, check your tire pressures and condition frequently, and perform all regularly scheduled maintenance (see page 340).

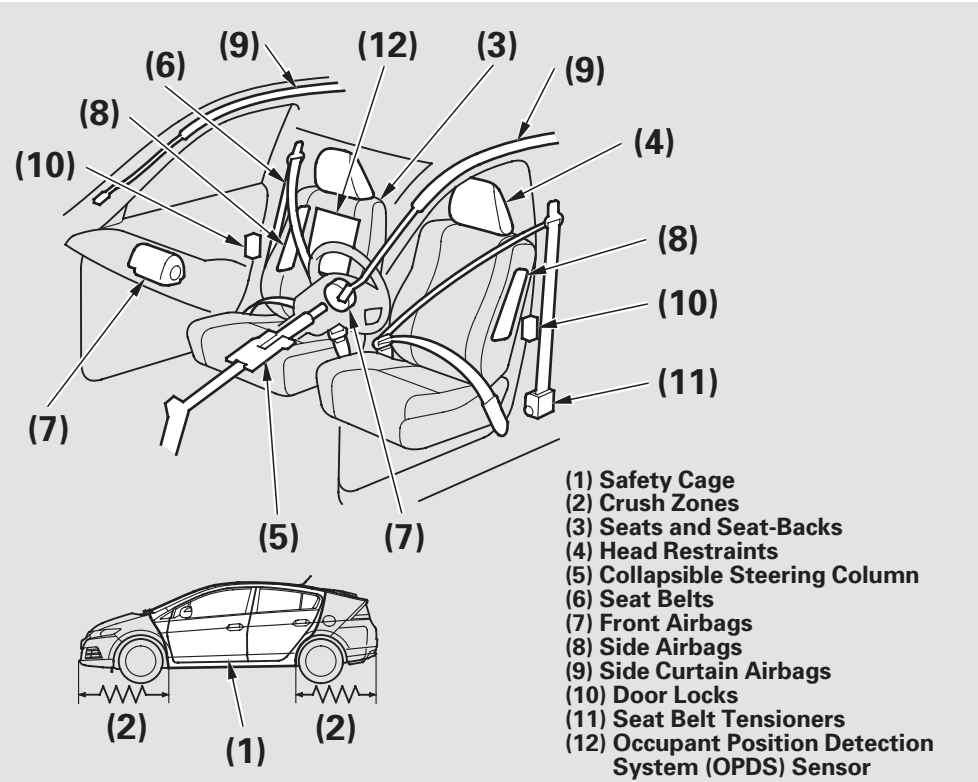

Your vehicle is equipped with many features that work together to protect you and your passengers during a crash.

Some features do not require any action on your part. These include a strong steel framework that forms a safety cage around the passenger compartment, front and rear crush zones, a collapsible steering column, and tensioners that tighten the front seat belts in a crash.

However, you and your passengers can't take full advantage of these features unless you remain sitting in the correct position and ***always wear your seat belts***. In fact, some safety features can contribute to injuries if they are not used properly.

The following pages explain how you can take an active role in protecting yourself and your passengers.

Seat Belts

Your vehicle is equipped with seat belts in all seating positions.

Your seat belt system also includes an indicator on the instrument panel and a beeper to remind you and your passengers to fasten your seat belts.

Why Wear Seat Belts

Seat belts are the single most effective safety device for adults and larger children. (Infants and smaller children must be properly restrained in child seats.)

Not wearing a seat belt properly increases the chance of serious injury or death in a crash, even though your vehicle has airbags.

In addition, most states and all Canadian provinces and territories require you to wear seat belts.

⚠ WARNING

Not wearing a seat belt properly increases the chance of serious injury or death in a crash, even though your vehicle has airbags.

Be sure you and your passengers always wear seat belts and wear them properly.

When properly worn, seat belts:

- Keep you connected to the vehicle so you can take advantage of the vehicle's built-in safety features.
- Help protect you in almost every type of crash, including:
  - frontal impacts
  - side impacts
  - rear impacts
  - rollovers
- Help keep you from being thrown against the inside of the vehicle and against other occupants.
- Keep you from being thrown out of the vehicle.
- Help keep you in a good position should the airbags ever deploy. A good position reduces the risk of injury from an inflating airbag and allows you to get the best advantage from the airbag.

Of course, seat belts cannot completely protect you in every crash. But in most cases, seat belts can reduce your risk of serious injury.

What You Should Do:

Always wear your seat belt, and make sure you wear it properly.

Airbags

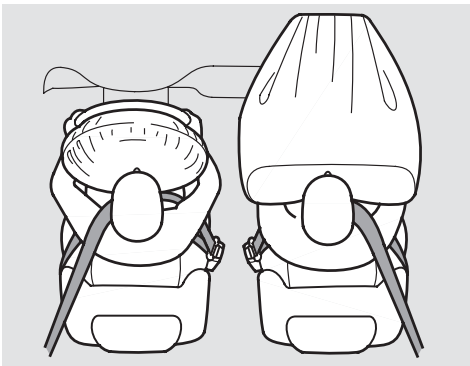

Your vehicle has a supplemental restraint system (SRS) with front airbags to help protect the heads and chests of the driver and a front seat passenger during a moderate to severe frontal collision (see page 28 for more information on how your front airbags work).

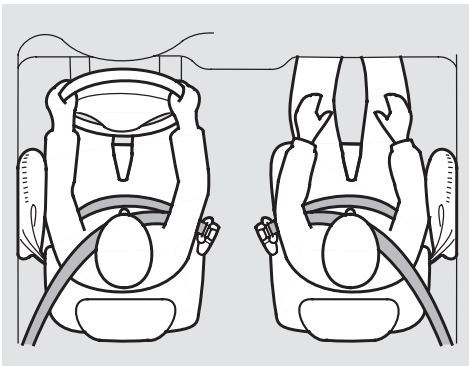

Your vehicle also has side airbags to help protect the upper torso of the driver or a front seat passenger during a moderate to severe side impact (see page 32 for more information on how your side airbags work).

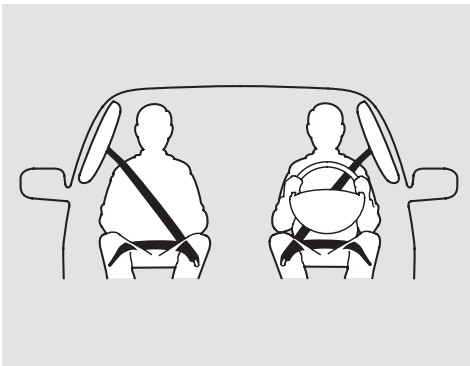

In addition, your vehicle has side curtain airbags to help protect the heads of the driver, front passenger, and passengers in the outer rear seating positions during a moderate to severe side or front impact (see page 33 for more information on how your side curtain airbags work).

The most important things you need to know about your airbags are:

- ***Airbags do not replace seat belts.*** They are designed to supplement the seat belts.

- ***Airbags offer no protection in rear collisions, or minor frontal or side collisions.***

- ***Airbags can pose hazards.*** To do their job, airbags must inflate with tremendous force. So while airbags help save lives, they can cause minor injuries or more serious or even fatal injuries if occupants are not properly restrained or sitting properly.

What you should do: Always wear your seat belt properly, and sit upright and as far back from the steering wheel as possible while allowing full control of the vehicle. A front passenger should move their seat as far back from the dashboard as possible.

The rest of this section gives more detailed information about how you can maximize your safety.

Remember, however, that no safety system can prevent all injuries or deaths that can occur in a severe crash, even when seat belts are properly worn and the airbags deploy.

Introduction
The following pages provide instructions on how to properly protect the driver, adult passengers, and teenage children who are large enough and mature enough to drive or ride in the front.

See pages 38 — 55 for important guidelines on how to properly protect infants, small children, and larger children who ride in your vehicle.

1. Close and Lock the Doors
After everyone has entered the vehicle, be sure the doors and the hatch are closed and locked.

Your vehicle has a door/hatch open indicator (red) on the instrument panel to indicate when any door or the hatch is not tightly closed.

See page 133 for how to lock the doors, and page 68 for how the door/hatch open indicator works.

Your vehicle also has a door and hatch open indicator on the multi-information display to indicate when a specific door or the hatch is not tightly closed. You will see the appropriate indicator(s) for each condition.

You will also hear a beep when you turn the ignition switch to the ON (II) position, and each time you open any door or the hatch with the key in the ON (II) position.

The above illustration shows that all doors and the hatch are open.

When the hatch is not tightly closed, this indicator will come on.

When one or more doors or the hatch are not tightly closed, the corresponding indicator for each condition will come on.

The above example shows the front right and rear left doors, and the hatch open.

Locking the doors reduces the chance of someone being thrown out of the vehicle during a crash, and it helps prevent passengers from accidentally opening a door and falling out.

Locking the doors and the hatch also helps prevent an outsider from unexpectedly opening a door or the hatch when you come to a stop.

Your vehicle has the auto door locking/unlocking feature. For more information, see page 108 .

2.Adjust the Front Seats

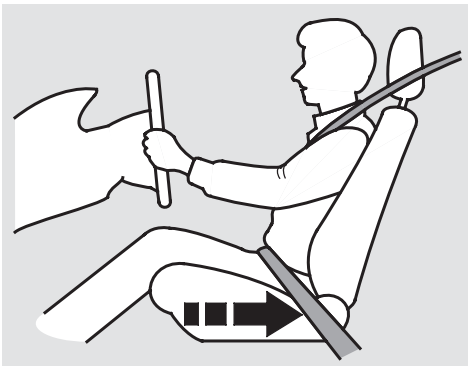

Adjust the driver's seat as far to the rear as possible while allowing you to maintain full control of the vehicle. Have a front passenger adjust their seat as far to the rear as possible.

If you sit too close to the steering wheel or dashboard, you can be seriously injured by an inflating front airbag, or by striking the steering wheel or dashboard.

The National Highway Traffic Safety Administration and Transport Canada recommend that drivers allow at least 10 inches (25 cm) between the center of the steering wheel and the chest. In addition to adjusting the seat, you can adjust the steering wheel up and down, and in and out (see page 128).

If you cannot get far enough away from the steering wheel and still reach the controls, we recommend that you investigate whether some type of adaptive equipment may help.

⚠ WARNING

Sitting too close to a front airbag can result in serious injury or death if the front airbags inflate.

Always sit as far back from the front airbags as possible.

Once a seat is adjusted correctly, rock it back and forth to make sure it is locked in position.

See page 141 for how to adjust the front seats.

3.Adjust the Seat-Backs

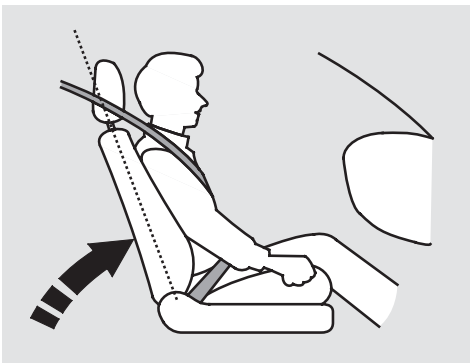

Adjust the driver's seat-back to a comfortable, upright position, leaving ample space between your chest and the airbag cover in the center of the steering wheel.

Passengers with adjustable seat-backs should also adjust their seat-back to a comfortable, upright position.

⚠ WARNING

Reclining the seat-back too far can result in serious injury or death in a crash.

Adjust the seat-back to an upright position, and sit well back in the seat.

Reclining a seat-back so that the shoulder part of the belt no longer rests against the occupant's chest reduces the protective capability of the belt. It also increases the chance of sliding under the belt in a crash and being seriously injured. The farther a seat-back is reclined, the greater the risk of injury.

See page 141 for how to adjust the seat-backs.

4. Adjust the Head Restraints

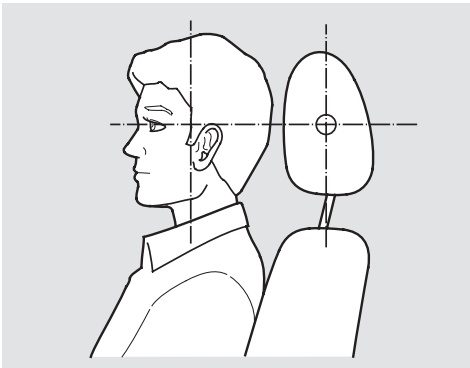

Adjust the driver's head restraint so the center of the back of your head rests against the center of the restraint.

Have passengers adjust their head restraints properly as well. Taller persons should adjust their restraint as high as possible.

⚠ WARNING

Improperly positioning head restraints reduces their effectiveness and you can be seriously injured in a crash.

Make sure head restraints are in place and positioned properly before driving.

Properly adjusted head restraints will help protect occupants from whiplash and other crash injuries.

See page 142 for how to adjust the head restraints and how the driver's and front passenger's active head restraints work.

5. Fasten and Position the Seat Belts

Insert the latch plate into the buckle, then tug on the belt to make sure the belt is securely latched. Check that the belt is not twisted, because a twisted belt can cause serious injuries in a crash.

Position the lap part of the belt as low as possible across your hips, then pull up on the shoulder part of the belt so the lap part fits snugly. This lets your strong pelvic bones take the force of a crash and reduces the chance of internal injuries.

⚠ WARNING

Improperly positioning the seat belts can cause serious injury or death in a crash.

Make sure all seat belts are properly positioned before driving.

If the seat belt touches or crosses your neck, or if it crosses your arm instead of your shoulder, you need to adjust the seat belt anchor height.

If necessary, pull up on the belt again to remove any slack, then check that the belt rests across the center of your chest and over your shoulder.

This spreads the forces of a crash over the strongest bones in your upper body.

CONTINUED

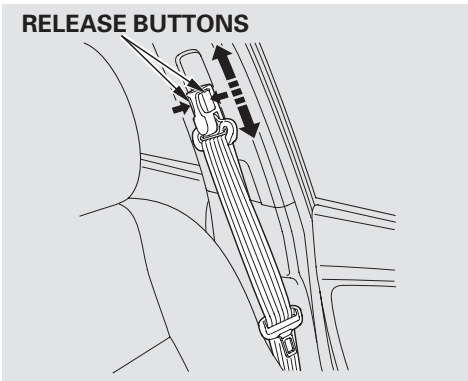

The front seats have adjustable seat belt anchors. To adjust the height of an anchor, squeeze the two release buttons, and slide the anchor up or down as needed (it has four positions).

Never place the shoulder portion of a lap/shoulder belt under your arm or behind your back. This could cause very serious injuries in a crash.

If a seat belt does not seem to work properly, it may not protect the occupant in a crash.

No one should sit in a seat with an inoperative seat belt. Using a seat belt that is not working properly can result in serious injury or death. Have your dealer check the belt as soon as possible.

See page 21 for additional information about your seat belts and how to take care of them.

6. Maintain a Proper Sitting Position

After all occupants have adjusted their seats and head restraints, and put on their seat belts, it is very important that they continue to sit upright, well back in their seats, with their feet on the floor, until the vehicle is safely parked and the engine is off.

Sitting improperly can increase the chance of injury during a crash. For example, if an occupant slouches, lies down, turns sideways, sits forward, leans forward or sideways, or puts one or both feet up, the chance of injury during a crash is greatly increased.

In addition, an occupant who is out of position in the front seat can be seriously or fatally injured in a crash by striking interior parts of the vehicle or being struck by an inflating front airbag.

⚠ WARNING

Sitting improperly or out of position can result in serious injury or death in a crash.

Always sit upright, well back in the seat, with your feet on the floor.

Advice for Pregnant Women

If you are pregnant, the best way to protect yourself and your unborn child when driving or riding in a vehicle is to always wear a seat belt, and keep the lap part of the belt as low as possible across the hips.

When driving, remember to sit upright and adjust the seat as far back as possible while allowing full control of the vehicle. When riding as a front passenger, adjust the seat as far back as possible.

This will reduce the risk of injuries to both you and your unborn child that can be caused by a crash or an inflating front airbag.

Each time you have a checkup, ask your doctor if it's okay for you to drive.

Additional Safety Precautions

- ***Two people should never use the same seat belt.*** If they do, they could be very seriously injured in a crash.

- ***Do not put any accessories on seat belts.*** Devices intended to improve occupant comfort or reposition the shoulder part of a seat belt can reduce the protective capability of the seat belt and increase the chance of serious injury in a crash.

- ***Never let passengers ride in the cargo area or on top of a folded-down back seat.*** If they do, they could be very seriously injured in a crash.

- ***Do not place hard or sharp objects between yourself and a front airbag.*** Carrying hard or sharp objects on your lap, or driving with a pipe or other sharp object in your mouth, can result in injuries if your front airbag inflates.

- ***Do not attach or place objects on the front airbag covers.*** Objects on the covers marked "SRS AIRBAG" could interfere with the proper operation of the airbags or be propelled inside the vehicle and hurt someone if the airbags inflate.

- ***Keep your hands and arms away from the airbag covers.*** If your hands or arms are close to an airbag cover, they could be injured if the airbag inflates.

- ***Do not attach hard objects on or near a door.*** If a side airbag or a side curtain airbag inflates, a cup holder or other hard object attached on or near the door could be propelled inside the vehicle and hurt someone.

- ***Passengers should not stand up or change seats while the vehicle is moving.*** A passenger who is not wearing a seat belt during a crash or emergency stop can be thrown against the inside of the vehicle, against other occupants, or out of the vehicle.

- ***Do not cover or replace front seat-back covers without consulting your dealer.*** Improperly replacing or covering front seat-back covers can prevent your side airbags from inflating during a side impact.

Seat Belt System Components
Your seat belt system includes lap/shoulder belts in all seating positions. The front seat belts are also equipped with automatic seat belt tensioners.

Seat Belt Indicator

The seat belt system includes an indicator on the instrument panel and a beeper to remind you and your front passenger to fasten your seat belts.

This system monitors the front seat belts. If you turn the ignition switch to the ON (II) position before your seat belt is fastened, the beeper will sound and the indicator will flash. If your seat belt is not fastened before the beeper stops, the indicator will stop flashing but remain on.

You will also see a “FASTEN SEAT BELT” message on the multi-information display.

If a front passenger does not fasten their seat belt, the indicator will come on about 6 seconds after the ignition switch is turned to the ON (II) position.

If either the driver or a front passenger does not fasten their seat belt while driving, the beeper will sound and the indicator will flash again at regular intervals.

In addition to the seat belt reminder indicator in the instrument panel, you will also see a “FASTEN SEAT BELT” or “FASTEN PASSENGER SEAT BELT” message. This remains displayed if you ignore it and do not fasten the seat belt while driving.

When no one is sitting in the front passenger’s seat, or an infant or small child is riding there, the indicator may not come on and the beeper may not sound.

CONTINUED

If the indicator comes on or the beeper sounds when the driver's seat belt is latched and there is no front seat passenger and no items on the front seat, something may be interfering with the monitoring system. Look for and remove:

- Any items under the front passenger's seat.
- Any object(s) hanging on the seat or in the seat-back pocket.
- Any object on the floor that is touching the rear of the seat-back.

If no obstructions are found, have your vehicle checked by a dealer.

Lap/Shoulder Belt
The lap/shoulder belt goes over your shoulder, across your chest, and across your hips.

To fasten the belt, insert the latch plate into the buckle, then tug on the belt to make sure the buckle is latched (see page 17 for how to properly position the belt).

To unlock the belt, press the red PRESS button on the buckle. Guide the belt across your body so that it retracts completely. After exiting the vehicle, be sure the belt is out of the way and will not get closed in the door.

All seat belts have an emergency locking retractor. In normal driving, the retractor lets you move freely in your seat while it keeps some tension on the belt. During a collision or sudden stop, the retractor automatically locks the belt to help restrain your body.

The seat belts in all positions except the driver's have a lockable retractor that must be activated to secure a child seat (see page 49).

If the shoulder part of the belt is pulled all the way out, the lockable retractor will activate. The belt will retract, but it will not allow the passenger to move freely.

To deactivate the lockable retractor, unlatch the buckle and let the seat belt fully retract. To refasten the seat belt, pull it out only as far as needed.

⚠ WARNING

Allowing a child to play with a seat belt or wrap one around their neck can result in serious injury or death.

Instruct children not to play with any seat belt and make sure any unused seat belt a child can reach is buckled, fully retracted, and locked.

Automatic Seat Belt Tensioners

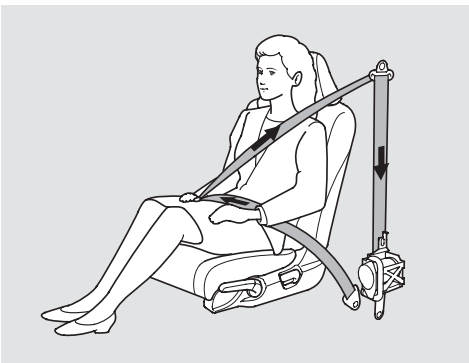

For added protection, the front seat belts are equipped with automatic seat belt tensioners. When activated, the tensioners immediately tighten the belts to help hold the driver and a front passenger in position.

The tensioners can be activated during a collision in which the front airbags *do not deploy*. In this case, the airbags would not be needed, but the additional restraint could be helpful.

If the tensioner is activated, the SRS indicator comes on and the tensioner must be replaced.

Seat Belt Maintenance
For safety, you should check the condition of your seat belts regularly.

Pull each belt out fully, and look for frays, cuts, burns, and wear. Check that the latches work smoothly and the belts retract easily. If a belt does not retract easily, cleaning the belt may correct the problem (see page 333). Any belt that is not in good condition or working properly will not provide good protection and should be replaced as soon as possible.

Honda provides a limited warranty on seat belts. See your *Honda Warranty Information* booklet for details.

If a seat belt is worn during a crash, you should have your dealer inspect the belt, and replace it if necessary. A belt that has been worn during a crash may not provide the same level of protection in a subsequent crash. The dealer should also inspect the anchors for damage and replace them if needed. If the automatic seat belt tensioners activate during a crash, they must be replaced.

⚠ WARNING

Not checking or maintaining seat belts can result in serious injury or death if the seat belts do not work properly when needed.

Check your seat belts regularly and have any problem corrected as soon as possible.

Airbag System Components

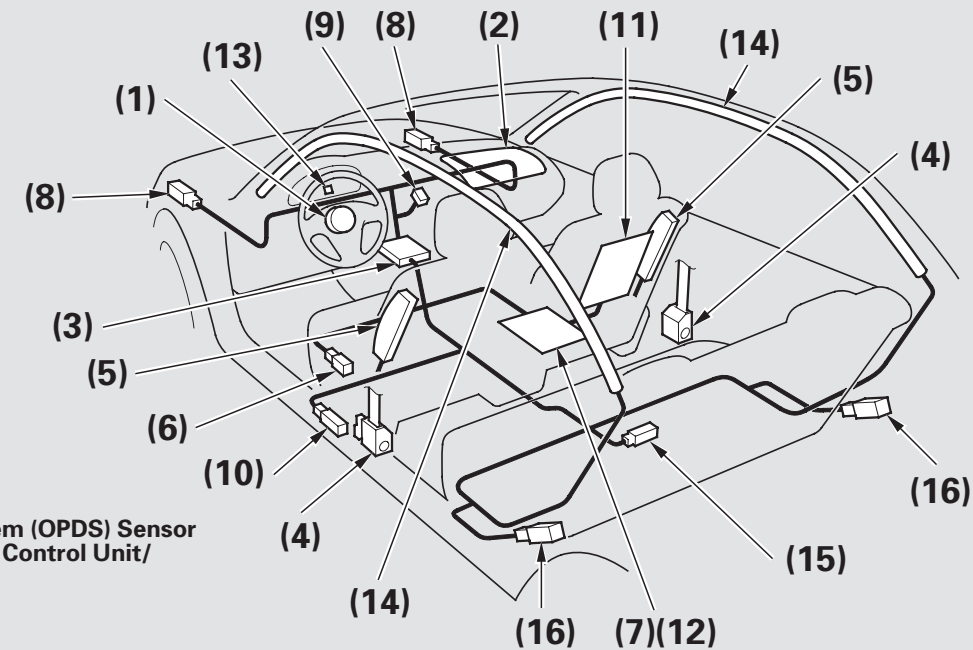

(1) Driver's Front Airbag
(2) Passenger's Front Airbag
(3) Control Unit
(4) Front Seat Belt Tensioners
(5) Side Airbags
(6) Driver's Seat Position Sensor
(7) Front Passenger's Weight Sensors
(8) Front Impact Sensors
(9) Passenger Airbag Off Indicator
(10) Side Impact Sensors (First)
(11) Occupant Position Detection System (OPDS) Sensor
(12) Front Passenger's Weight Sensors Control Unit/ OPDS Sensors Control Unit
(13) SRS Indicator
(14) Side Curtain Airbags
(15) Safing Sensor
(16) Side Impact Sensors (Second)

CONTINUED

Additional Information About Your Airbags

Your Airbag System includes:

- Two SRS (supplemental restraint system) front airbags. The driver's airbag is stored in the center of the steering wheel; the front passenger's airbag is stored in the dashboard. Both are marked "SRS AIRBAG" (see page 28).
- Two side airbags, one for the driver and one for a front passenger. The airbags are stored in the outer edges of the seat-backs. Both are marked "SIDE AIRBAG" (see page 32).
- Two side curtain airbags, one for each side of the vehicle. The airbags are stored in the ceiling, above the side windows. The front and rear pillars are marked "SIDE CURTAIN AIRBAG" (see page 33).
- Automatic front seat belt tensioners (see page 23).
- Sensors that can detect a moderate to severe front impact or side impact.
- Sensors that can detect whether a child is in the passenger's side airbag path and signal the control unit to turn the airbag off (see page 32).
- Sensors that can detect whether the driver's seat belt and the front passenger's seat belt are latched or unlatched (see page 21).
- A driver's seat position sensor that monitors the distance of the seat from the front airbag. If the seat is too far forward, the airbag will inflate with less force (see page 30).

- Weight sensors that monitor the weight on the front passenger's seat. If the weight is about 65 lbs (29 kg) or less (the weight of an infant or small child), the passenger's front airbag will be turned off (see page 30).

- A sophisticated electronic system that continually monitors and records information about the sensors, the control unit, the airbag activators, the seat belt tensioners, and driver and front passenger seat belt use when the ignition switch is in the ON (II) position.

- An indicator on the instrument panel that alerts you to a possible problem with your airbag system components (see page 34).

- An indicator on the instrument panel that alerts you that the passenger's side airbag has been turned off (see page 34).

- An indicator on the dashboard that alerts you that the passenger's front airbag has been turned off (see page 35).

- Emergency backup power in case your vehicle's electrical system is disconnected in a crash.

How Your Front Airbags Work

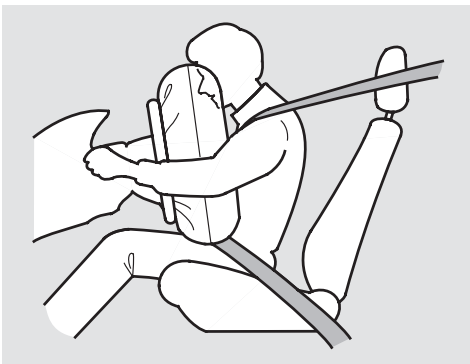

If you ever have a moderate to severe frontal collision, sensors will detect the vehicle's rapid deceleration.

If the rate of deceleration is high enough, the control unit will inflate the driver's and front passenger's airbags, at the time and with the force needed.

During a frontal crash, your seat belt restrains your lower body and torso, and the front airbag helps protect your head and chest.

Although both airbags normally inflate within a split second of each other, it is possible for only one airbag to deploy.

This can happen if the severity of a collision is at the margin, or threshold, that determines whether or not the airbags will deploy. In such cases, the seat belt will provide sufficient protection, and the supplemental protection offered by the airbag would be minimal.

Only the driver's airbag can deploy if there is no passenger in the front seat, or if the advanced airbag system has turned the passenger's airbag off (see page 35).

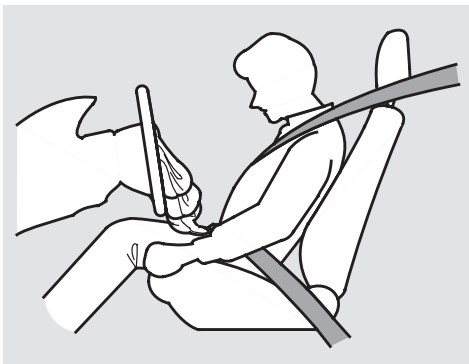

After inflating, the front airbags immediately deflate, so they won't interfere with the driver's visibility, or the ability to steer or operate other controls.

The total time for inflation and deflation is less than a second, so fast that most occupants are not aware that the airbags deployed until they see them lying in their laps.

After a crash, you may see what looks like smoke. This is actually powder from the airbag's surface. Although the powder is not harmful, people with respiratory problems may experience some temporary discomfort. If this occurs, get out of the vehicle as soon as it is safe to do so.

Dual-Stage, Multiple-Threshold Front Airbags (SRS)

Your vehicle is equipped with dual-stage, multiple-threshold front airbags (SRS). During a frontal crash severe enough to cause one or both front airbags to deploy, the airbags can inflate at different rates, depending on the severity of the crash, whether or not the seat belts are latched, and/or other factors. Front airbags are designed to supplement the seat belts to help reduce the likelihood of head and chest injuries in frontal crashes.

CONTINUED

Advanced Airbags
Your front airbags are also advanced airbags. The main purpose of this feature is to help prevent airbag-caused injuries to short drivers and children or small-statured adults who ride in front.

For both advanced airbags to work properly:

- Occupants must sit upright and wear their seat belts properly.
- Do not spill any liquids on or under the seats, cover the sensors, or put any objects or metal items under the front seats.
- Objects placed or pushed under the front passenger's seat may cause the sensor to malfunction, increasing the risk of injury in a crash.

Failure to follow these instructions could damage the sensors or prevent them from working properly.

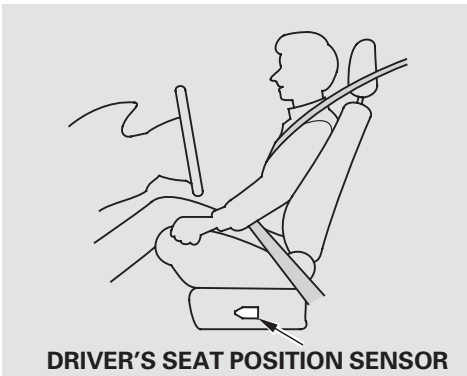

The driver's advanced front airbag system includes a seat position sensor under the seat. If the seat is too far forward, the airbag will inflate with less force, regardless of the severity of the impact.

If there is a problem with the sensor, the SRS indicator will come on, and the airbag will inflate in the normal manner regardless of the driver's seating position.

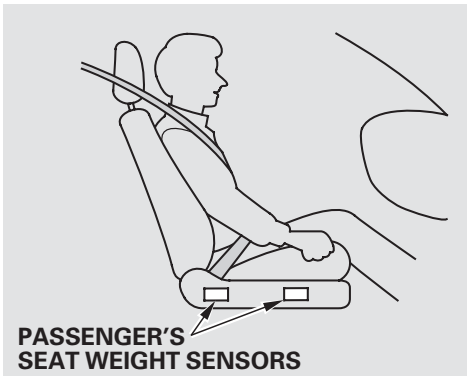

The passenger's advanced front airbag system has weight sensors under the seat. Although Honda does not encourage carrying an infant or small child in front, if the sensors detect the weight of an infant or small child (up to about 65 lbs or 29 kg), the system will automatically turn the passenger's front airbag off.

Be aware that objects placed on the passenger's seat can also cause the airbag to be turned off.

When the passenger airbag gets turned off by the weight sensors, a "passenger airbag off" indicator in the center of the dashboard comes on (see page 35).

If the weight sensors detect there is no passenger in the front seat, the airbag is automatically turned off. However, the passenger airbag off indicator in this situation will not come on.

To ensure that the passenger's advanced front airbag system will work properly, ***do not do anything that would increase or decrease the weight on the front passenger's seat.*** This includes:

- A rear passenger pushing or pulling on the back of the front passenger's seat.
- Moving the front seat forcibly back against cargo on the seat or floor behind it.
- Hanging heavy items on the front passenger seat, or placing heavy items in the seat-back pocket.
- Moving the front seat or seat-back forcibly back against the folded rear seat.
- Back seat passengers should not wedge objects or intentionally force their feet under the front passenger seat.

How Your Side Airbags Work

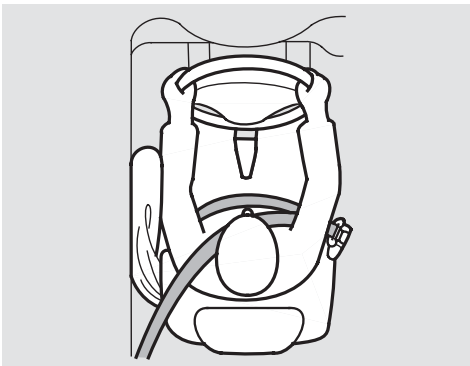

If you ever have a moderate to severe side impact, sensors will detect rapid acceleration and signal the control unit to instantly inflate either the driver's or the passenger's side airbag.

Only one airbag will deploy during a side impact. If the impact is on the passenger's side, the passenger's side airbag may not deploy if there is no passenger.

To get the best protection from the side airbags, front seat occupants should wear their seat belts and sit upright and well back in their seats.

Side Airbag Cutoff System

Your vehicle has a side airbag cutoff system designed primarily to protect a child riding in the front passenger's seat.

Although Honda does not encourage children to ride in front, if the position sensors detect a child has leaned into the side airbag's deployment path, the airbag will shut off.

The side airbag may also shut off if a short adult leans sideways, or a larger adult slouches and leans sideways into the airbag's deployment path.

Objects placed on the front passenger seat can also cause the side airbag to be shut off.

If the side airbag off indicator comes on (see page 34), have the passenger sit upright. Once the passenger is out of the airbag's deployment path, the system will turn the airbag back on, and the indicator will go out.

There will be some delay between the moment the passenger moves into or out of the airbag deployment path and when the indicator comes on or goes off.

A front seat passenger should not use a cushion or another object as a backrest. It may prevent the cutoff system from working properly.

How Your Side Curtain Airbags Work

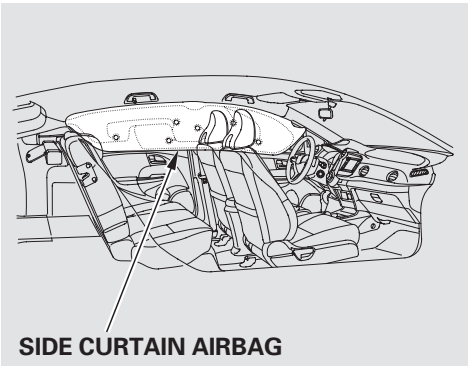

In a moderate to severe side impact, sensors will detect rapid acceleration and signal the control unit to instantly inflate the side curtain airbag.

If the impact is on the passenger's side, the passenger's side curtain airbag will inflate even if there are no occupants on that side of the vehicle.

One or both side curtain airbags may inflate in a moderate to severe frontal collision which causes the front airbags to deploy.

To get the best protection from the side curtain airbags, occupants should wear their seat belts and sit upright and well back in their seats.

How the SRS Indicator Works

The SRS indicator alerts you to a potential problem with your airbag system components.

When you turn the ignition switch to the ON (II) position, this indicator comes on for several seconds then goes off. This tells you the system is working properly.

If the indicator comes on at any other time, or does not come on at all, you should have the system checked by your dealer. For example:

- If the SRS indicator does not come on after you turn the ignition switch to the ON (II) position.
- If the indicator stays on after the engine starts.
- If the indicator comes on or flashes on and off while you drive.

⚠ WARNING

Ignoring the SRS indicator can result in serious injury or death if the airbag systems or tensioners do not work properly.

Have your vehicle checked by a dealer as soon as possible if the SRS indicator alerts you to a possible problem.

You will also see a "CHECK AIRBAG SYSTEM" message on the multi-information display.

If you see any of these indications, the airbag system components may not work properly when you need them.

U.S. Canada

How the Side Airbag Off Indicator Works

This indicator alerts you that the passenger's side airbag has been automatically shut off. It does ***not*** mean there is a problem with your side airbags.

When you turn the ignition switch to the ON (II) position, the indicator should come on for several seconds and then go off (see page 65). If it doesn't come on, stays on, or comes on while driving without a passenger in the front seat, have the system checked.

You will also see a "PASSENGER SIDE AIRBAG OFF" message on the multi-information display.

How the Passenger Airbag Off Indicator Works

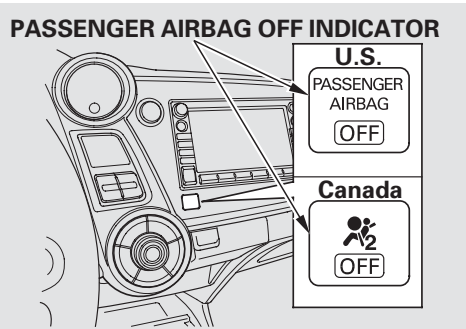

On vehicle with navigation system

This indicator alerts you that the passenger's front airbag has been shut off because weight sensors detect about 65 lbs (29 kg) or less (the weight of an infant or small child) on the front passenger's seat. It does ***not mean*** there is a problem with the airbag.

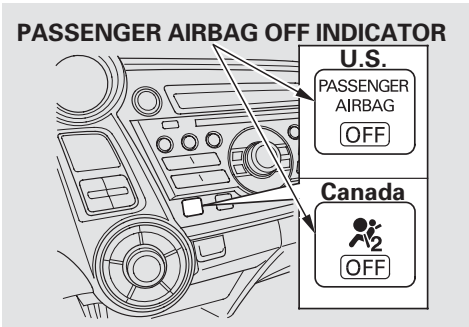

On vehicle without navigation system

Be aware that objects placed on the front seat can cause the indicator to come on.

If no weight is detected on the front seat, the airbag will be automatically shut off. However, the indicator will not come on.

The passenger airbag off indicator may come on and off repeatedly if the total weight on the seat is near the airbag cutoff threshold.

If an adult or teenage passenger is riding in front, move the seat as far to the rear as possible, and have the passenger sit upright and wear the seat belt properly.

CONTINUED

If the indicator comes on with no front seat passenger and no objects on the seat, or with an adult riding there, something may be interfering with the weight sensors. Look for and remove:

- Any items under the front passenger's seat.
- Any object(s) hanging on the seat or in the seat-back pocket.
- Any object on the floor that is touching the rear of the seat-back.

If no obstructions are found, have your vehicle checked by a dealer as soon as possible.

Airbag Service

Your airbag systems are virtually maintenance free, and there are no parts you can safely service. However, you must have your vehicle serviced if:

- ***An airbag ever inflates.*** Any airbag that has deployed must be replaced along with the control unit and other related parts. Any seat belt tensioner that activates must also be replaced.

  We recommend against the use of salvaged airbag system components, including the airbag, tensioners, sensors, and control unit.

  Do not try to remove or replace any airbag by yourself. This must be done by an authorized dealer or a knowledgeable body shop.

- ***The SRS indicator alerts you to a problem.*** Take your vehicle to an authorized dealer as soon as possible. If you ignore this indication, your airbags may not operate properly.

- ***If your vehicle has a moderate to severe impact.*** Even if your airbags do not inflate, your dealer should inspect the driver's seat position sensor, the front passenger's weight sensors, the front seat belt tensioners, and all seat belts and their anchors worn during a crash to make sure they are operating properly.

Additional Safety Precautions

- ***Do not attempt to deactivate your airbags.*** Together, airbags and seat belts provide the best protection.

- ***Do not tamper with airbag components or wiring for any reason.*** Tampering could cause the airbags to deploy, possibly causing very serious injury.

- ***Do not remove or modify a front seat without consulting your dealer.*** This could make the driver's seat position sensor or the front passenger's weight sensors ineffective. If it is necessary to remove or modify a front seat to accommodate a person with disabilities, first contact Honda Automobile Customer Service at (800) 999-1009 in the US, or Honda Customer Relations at 1-888-9-HONDA-9 in Canada.

- ***Do not expose the front passenger's seat-back to liquid.*** If water or another liquid soaks into a seat-back, it can prevent the side airbag cutoff system from working properly.

Children depend on adults to protect them. However, despite their best intentions, many adults do not know how to *properly* protect child passengers.

If you have children, or ever need to drive with a child in your vehicle, be sure to read this section. It begins with important general guidelines, then presents special information for infants, small children, and larger children.

All Children Must Be Restrained
Each year, many children are injured or killed in vehicle crashes because they are either unrestrained or not properly restrained. In fact, vehicle collisions are the number one cause of the death of children age 12 and under.

To reduce the number of child deaths and injuries, every state, Canadian province and territory requires that infants and children be properly restrained when they ride in a vehicle.

Infants and small children must be restrained in an approved child seat that is properly secured to the vehicle (see pages 43 — 51).

⚠ WARNING

Children who are unrestrained or improperly restrained can be seriously injured or killed in a crash.

Any child too small for a seat belt should be properly restrained in a child seat. A larger child should be properly restrained with a seat belt and use a booster seat if necessary.

Larger children must be restrained with a lap/shoulder belt and ride on a booster seat until the seat belt fits them properly (see pages 52 — 55).

All Children Should Sit in a Back Seat
According to crash statistics, children of all ages and sizes are safer when they are restrained in a back seat.

The National Highway Traffic Safety Administration and Transport Canada recommend that all children aged 12 and under be properly restrained in a back seat. Some states have laws restricting where children may ride.

Children who ride in back are less likely to be injured by striking interior vehicle parts during a collision or hard braking. Also, children cannot be injured by an inflating front airbag when they ride in the back.

The Passenger's Front Airbag Can Pose Serious Risks
Front airbags have been designed to help protect adults in a moderate to severe frontal collision. To do this, the passenger's front airbag is quite large, and it can inflate with enough force to cause very serious injuries.

Even though your vehicle has an advanced front airbag system that automatically turns the passenger's front airbag off under certain circumstances (see page 35), please follow these guidelines:

Infants
Never put a rear-facing child seat in the front seat of a vehicle equipped with a passenger's front airbag. If the airbag inflates, it can hit the back of the child seat with enough force to kill or very seriously injure an infant.

Small Children
Placing a forward-facing child seat in the front seat of a vehicle equipped with a passenger's front airbag can be hazardous. If the vehicle seat is too far forward, or the child's head is thrown forward during a collision, an inflating front airbag can strike the child with enough force to kill or very seriously injure a small child.

Larger Children
Children who have outgrown child seats are also at risk of being injured or killed by an inflating passenger's front airbag. Whenever possible, larger children should sit in the back seat, on a booster seat if needed, and be properly restrained with a seat belt. (See page 52 for important information about protecting larger children.)

CONTINUED

To remind you of the passenger's front airbag hazards, and that children must be properly restrained in a back seat, your vehicle has warning labels on the dashboard (U.S. models) and on the front visors. Please read and follow the instructions on these labels.

U.S. Models

SUN VISORS

DASHBOARD

Canadian Models

SUN VISORS

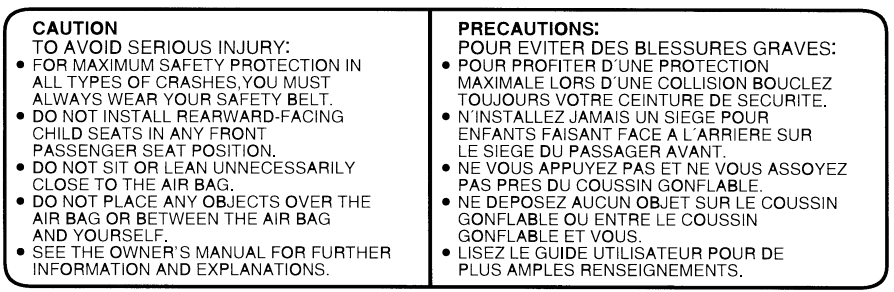

If You Must Drive with Several Children
Your vehicle has a back seat where children can be properly restrained. If you ever have to carry a group of children, and a child must ride in front:

- Place the largest child in the front seat, provided the child is large enough to wear the lap/shoulder belt properly (see page 52).
- Move the vehicle seat as far to the rear as possible (see page 141).
- Have the child sit upright and well back in the seat (see page 18).
- Make sure the seat belt is properly positioned and secured (see page 17).

If a Child Requires Close Attention
Many parents say they prefer to put an infant or a small child in the front passenger seat so they can watch the child, or because the child requires attention.

Placing a child in the front seat exposes the child to hazards in a frontal collision, and paying close attention to a child distracts the driver from the important tasks of driving, placing both of you at risk.

If a child requires close physical attention or frequent visual contact, we strongly recommend that another adult ride with the child in the back seat. The back seat is far safer for a child than the front.

Additional Safety Precautions

- ***Never hold an infant or child on your lap.*** If you are not wearing a seat belt in a crash, you could be thrown forward and crush the child against the dashboard or a seat-back. If you are wearing a seat belt, the child can be torn from your arms and be seriously hurt or killed.

- ***Never put a seat belt over yourself and a child.*** During a crash, the belt could press deep into the child and cause serious or fatal injuries.

- ***Never let two children use the same seat belt.*** If they do, they could be very seriously injured in a crash.

- ***Use the childproof door locks to prevent children from opening the rear doors.*** This can prevent children from accidentally falling out (see page 134).

- ***Make sure any unused seat belt that a child can reach is buckled, the lockable retractor is activated, and the belt is fully retracted and locked.*** If a child wraps a loose seat belt around their neck, they can be seriously or fatally injured. (See pages 49 and 50 for how to activate and deactivate the lockable retractor.)

- ***Do not leave children alone in a vehicle.*** Leaving children without adult supervision is illegal in most states, Canadian provinces and territories, and can be very hazardous.

  For example, infants and small children left in a vehicle on a hot day can die from heatstroke. A child left alone with the key in the ignition switch can accidentally set the vehicle in motion, possibly injuring themselves or others.

- ***Lock all doors and the hatch when your vehicle is not in use.*** Children who play in vehicles can accidentally get trapped inside the vehicle. Teach your children not to play in or around vehicles.

- ***Keep vehicle keys and remote transmitters out of the reach of children.*** Even very young children learn how to unlock vehicle doors, turn on the ignition switch, and open the hatch, which can lead to accidental injury or death.

Protecting Infants

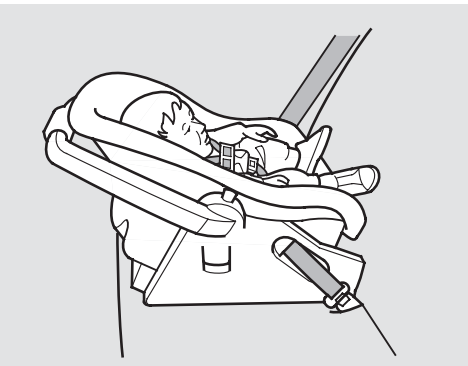

Child Seat Type
An infant must be properly restrained in a rear-facing, reclining child seat until the child reaches the seat maker's weight or height limit for the seat, and the child is at least one year old.

Only a rear-facing child seat provides proper support for a baby's head, neck, and back.

Two types of seats may be used: a seat designed exclusively for infants, or a convertible seat used in the rear-facing, reclining mode.

Do not put a rear-facing child seat in a forward-facing position. If placed facing forward, an infant could be very seriously injured during a frontal collision.

Rear-facing Child Seat Placement
A rear-facing child seat can be placed in any seating position in the back seat, but not in the front. ***Never put a rear-facing child seat in the front seat.***

If the passenger's front airbag inflates, it can hit the back of the child seat with enough force to kill or seriously injure an infant.

When properly installed, a rear-facing child seat may prevent the driver or a front passenger from moving their seat as far back as recommended, or from locking their seat-back in the desired position.

It could also interfere with proper operation of the passenger's advanced front airbag system.

CONTINUED

In any of these situations, we strongly recommend that you install the child seat directly behind the front passenger's seat, move the seat as far forward as needed, and leave it unoccupied. Or, you may wish to get a smaller rear-facing child seat.

⚠ WARNING

Placing a rear-facing child seat in the front seat can result in serious injury or death during a crash.

Always place a rear-facing child seat in the back seat, not the front.

Protecting Small Children

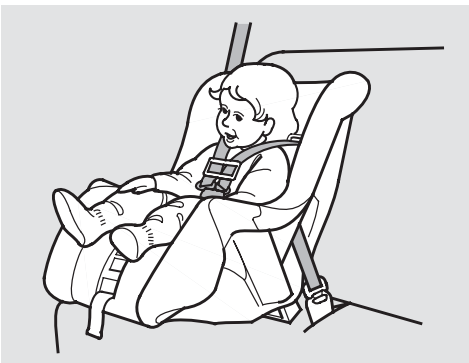

Child Seat Type
Many states, Canadian provinces and territories allow a child one year of age or older who also meets the minimum size and weight requirements to transition from a rear-facing child seat to a forward facing seat. Know the requirements where you are driving and follow the child seat instructions. Many experts recommend use of a rear-facing seat up to age two, if the child's height and weight are appropriate for a rear-facing seat.

Of the different seats available, we recommend those that have a five-point harness system as shown.

We also recommend that a small child use the child seat until the child reaches the weight or height limit for the seat.

Child Seat Placement
We strongly recommend placing a forward-facing child seat in a back seat, not the front.

Placing a forward-facing child seat in the front seat of a vehicle equipped with a passenger's airbag can be hazardous. If the vehicle seat is too far forward, or the child's head is thrown forward during a collision, an inflating airbag can strike the child with enough force to cause very serious or fatal injuries.

Even with advanced front airbags that automatically turn the passenger's front airbag off (see page 35), a back seat is the safest place for a small child.

If it is necessary to put a forward-facing child seat in the front, move the vehicle seat as far to the rear as possible, and be sure the child seat is firmly secured to the vehicle and the child is properly strapped in the seat.

⚠ WARNING

Placing a forward-facing child seat in the front seat can result in serious injury or death if the front airbag inflates.

If you must place a forward-facing child seat in front, move the vehicle seat as far back as possible, and properly restrain the child.

Selecting a Child Seat

Most child seats are LATCH-compatible (Lower Anchors and Tethers for CHildren). Some have a rigid-type connector, while others have a flexible-type connector. Both are equally easy to use. Some existing and previously owned child seats can only be installed using the seat belt. Whichever type you choose, follow the child seat manufacturer's use and care instructions as well as the instructions in this manual. Proper installation is key to maximizing your child's safety.

In seating positions and vehicles not equipped with LATCH, a LATCH-compatible child seat can be installed using the seat belt and a top tether for added security. This is because all child seats are required to be designed so that they can be secured with a lap belt or the lap part of a lap/shoulder belt.

In addition, the child seat manufacturer may advise that a seat belt be used to attach a LATCH-compatible seat once a child reaches a specified weight. Please read the child seat owner's manual for proper installation instructions.

Important considerations when selecting a child seat
Make sure the child seat meets the following three requirements:

- The child seat is the correct type and size for the child.
- The child seat is the correct type for the seating position.
- The child seat is compliant with Federal Motor Vehicle Safety Standard 213 or Canadian Motor Vehicle Safety Standard 213.

Installing a Child Seat
After selecting a proper child seat and a good place to install the seat, there are three main steps in installing the seat:

1. ***Properly secure the child seat to the vehicle.*** All child seats must be secured to the vehicle with the lap part of a lap/shoulder belt or with the LATCH (Lower Anchors and Tethers for CHildren) system. A child whose seat is not properly secured to the vehicle can be endangered in a crash.

2. ***Make sure the child seat is firmly secured.*** After installing a child seat, push and pull the seat forward and from side-to-side to verify that it is secure.

A child seat secured with a seat belt should be installed as firmly as possible. However, it does not need to be “rock solid.” Some side-to-side movement can be expected and should not reduce the child seat’s effectiveness.

If the child seat is not secure, try installing it in a different seating position, or use a different style of child seat that can be firmly secured.

3. Secure the child in the child seat. Make sure the child is properly strapped in the child seat according to the child seat maker's instructions. A child who is not properly secured in a child seat can be seriously injured in a crash.

The following pages provide guidelines on how to properly install a child seat. A forward-facing child seat is used in all examples, but the instructions are the same for a rear-facing child seat.

Installing a Child Seat with LATCH

Your vehicle is equipped with LATCH (Lower Anchors and Tethers for CHildren) at the outer rear seats.

The lower anchors are located between the seat-back and seat bottom, and are to be used only with a child seat designed for use with LATCH.

The location of each lower anchor is indicated by a small button above the anchor point.

You can find lower anchors in the slits in the seat-backs.

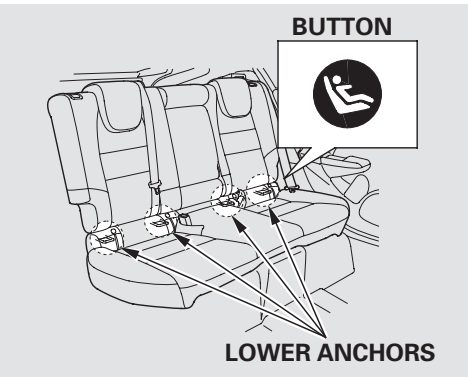

To install a LATCH-compatible child seat:

1. Move the seat belt buckle or tongue away from the lower anchors.

2. Make sure there are no objects near the anchors that could prevent a secure connection between the child seat and the anchors.

CONTINUED

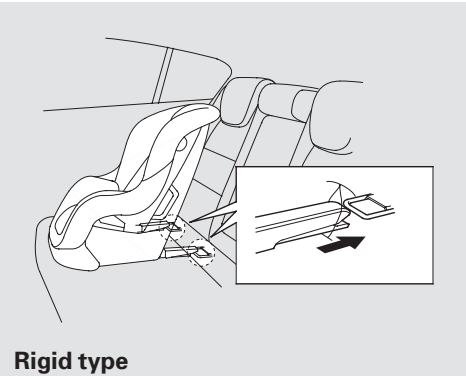

3. Place the child seat on the vehicle seat, then attach the seat to the lower anchors according to the child seat maker's instructions.

   Some LATCH-compatible seats have a rigid-type connector as shown above.

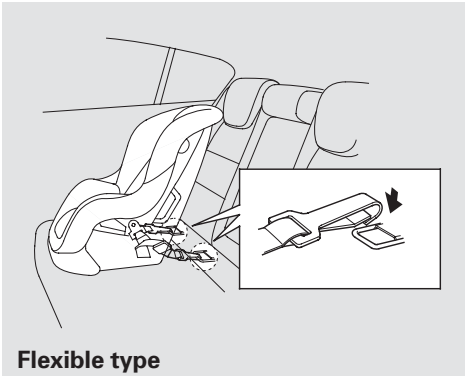

Other LATCH-compatible seats have a flexible-type connector as shown above.

4. Whatever type you have, follow the child seat maker's instructions for adjusting or tightening the fit.

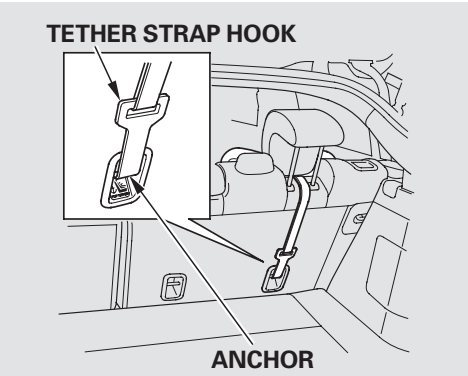

5. Lift the head restraint (see page 142), then route the tether strap through the legs of the head restraint and over the seat-back, making sure the strap is not twisted.

6. Attach the tether strap hook to the tether anchor, then tighten the strap as instructed by the child seat maker.

   If the tether strap is too long and cannot be tightened firmly, find a route where the strap can be tightened securely.

7. Push and pull the child seat forward and from side-to-side to verify that it is secure.

Installing a Child Seat with a Lap/ Shoulder Belt

When not using the LATCH system, all child seats must be secured to the vehicle with the lap part of a lap/ shoulder belt.

In addition, the lap/shoulder belts in all seating positions except the driver's have a lockable retractor that must be activated to secure a child seat.

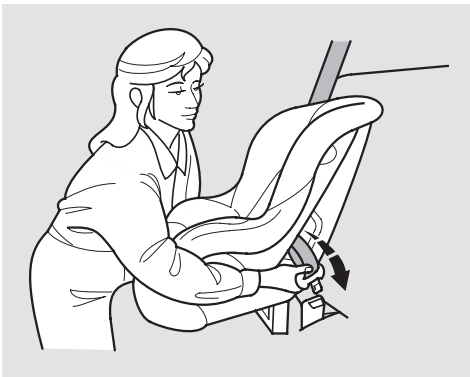

1. With the child seat in the desired seating position, route the belt through the child seat according to the seat maker's instructions, then insert the latch plate into the buckle and remove any slack from the lap portion of the belt.

CONTINUED

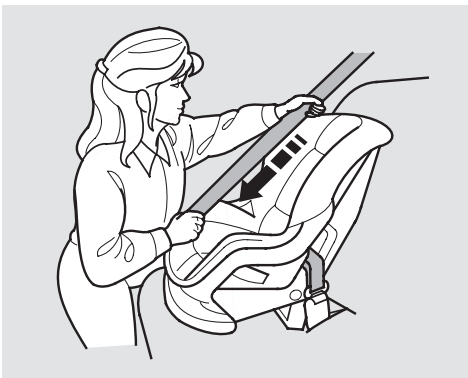

2. To activate the lockable retractor, slowly pull the shoulder part of the belt all the way out until it stops, then let the belt feed back into the retractor.

3. After the belt has retracted, tug on it. If the belt is locked, you will not be able to pull it out. If you can pull the belt out, it is not locked, and you will need to repeat these steps.

4. After confirming that the belt is locked, grab the shoulder part of the belt near the buckle, and pull up to remove any slack from the lap part of the belt. Remember, if the lap part of the belt is not tight, the child seat will not be secure.

   To remove slack, it may help to put weight on the child seat, or push on the back of the seat while pulling up on the belt.

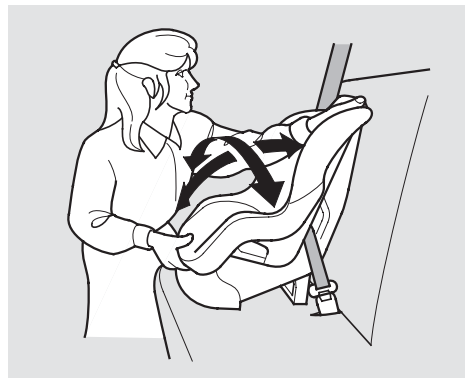

5. Push and pull the child seat forward and from side-to-side to verify that it is secure enough to stay upright during normal driving maneuvers. If the child seat is not secure, unlatch the belt, allow it to retract fully, then repeat these steps.

To deactivate the lockable retractor and remove a child seat, unlatch the buckle, unroute the seat belt, and let the belt fully retract.

Installing a Child Seat with a Tether

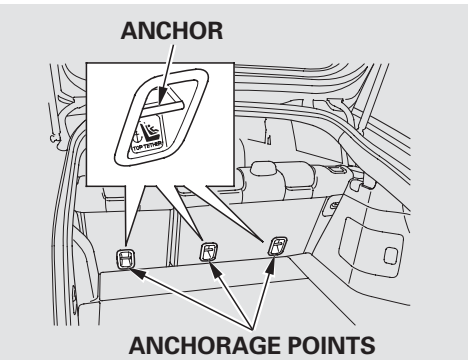

A child seat with a tether can be installed in any seating position in the back seat, using one of the anchorage points shown above.

Since a tether can provide additional security to the lap/shoulder belt installation, we recommend using a tether whenever one is required or available.

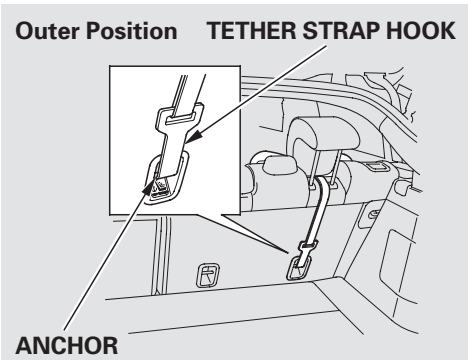

1. After properly securing the child seat (see page 49), lift the head restraint, then route the tether strap over the seat-back and through the head restraint legs.

2. Attach the tether strap hook to the anchor, making sure the strap is not twisted.

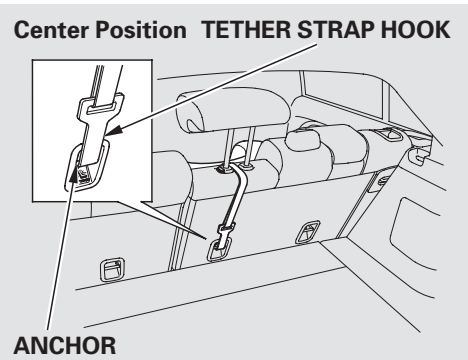

3. Tighten the strap according to the seat maker's instructions.

   If the tether strap is too long and cannot be tightened firmly, find a route where the strap can be tightened securely.

When a child reaches the recommended weight or height limit for a forward-facing child seat, the child should sit in a back seat on a booster seat and wear the lap/shoulder belt.

The following pages give instructions on how to check proper seat belt fit, what kind of booster seat to use if one is needed, and important precautions for a child who must sit in front.

⚠ WARNING

Allowing a child age 12 or under to sit in front can result in injury or death if the passenger's front airbag inflates.

If a child must ride in front, move the vehicle seat as far back as possible, use a booster seat if needed, have the child sit up properly and wear the seat belt properly.

Checking Seat Belt Fit

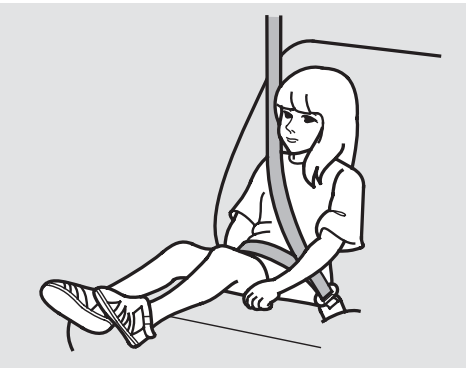

To determine if a lap/shoulder belt properly fits a child, have the child put on the seat belt, then ask yourself:

1. Does the child sit all the way back against the seat?

2. Do the child's knees bend comfortably over the edge of the seat?

3. Does the shoulder belt cross between the child's neck and arm?

4. Is the lap part of the belt as low as possible, touching the child's thighs?

5. Will the child be able to stay seated like this for the whole trip?

If you answer yes to all these questions, the child is ready to wear the lap/shoulder belt correctly. If you answer no to any question, the child needs to ride on a booster seat.

Using a Booster Seat

A child who has outgrown a forward-facing child seat should ride in a back seat and use a booster seat until the lap/shoulder belt fits them properly without the booster.

Some states, Canadian provinces and territories also require children to use a booster seat until they reach a given age or weight (e.g., 6 years or 60 lbs). Be sure to check current laws in the states, provinces or territories where you intend to drive.

Booster seats can be high-back or low-back. Whichever style you select, make sure the booster seat meets federal safety standards (see page 46) and that you follow the booster seat maker's instructions.

If a child who uses a booster seat must ride in front, move the vehicle seat as far back as possible, and be sure the child is wearing the seat belt properly.

A child may continue using a booster seat until the tops of their ears are even with the top of the vehicle's or booster's seat-back. A child of this height should be tall enough to use the lap/shoulder belt without a booster seat.

When Can a Larger Child Sit in Front
The National Highway Traffic Safety Administration and Transport Canada recommend that all children age 12 and under be properly restrained in a back seat.

If the passenger's front airbag inflates in a moderate to severe frontal collision, the airbag can cause serious injuries to a child who is unrestrained, improperly restrained, sitting too close to the airbag, or out of position.

A side airbag also poses risks. If any part of a larger child's body is in the path of a deploying side airbag, the child could receive possibly serious injuries.

Of course, children vary widely. And while age may be one indicator of when a child can safely ride in front, there are other important factors you should consider.

Physical Size
Physically, a child must be large enough for the lap/shoulder belt to properly fit (see pages 17 and 52). If the seat belt does not fit properly, with or without the child sitting on a booster seat, the child should not sit in front.

Maturity
To safely ride in front, a child must be able to follow the rules, including sitting properly, and wearing the seat belt properly throughout a ride.

If you decide that a child can safely ride up front, be sure to:

- Carefully read the owner's manual, and make sure you understand all seat belt instructions and all safety information.
- Move the vehicle seat to the rear-most position.
- Have the child sit up straight, back against the seat, and feet on or near the floor.
- Check that the child's seat belt is properly and securely positioned.
- Supervise the child. Even mature children sometimes need to be reminded to fasten the seat belts or sit properly.

Additional Safety Precautions

- ***Do not let a child wear a seat belt across the neck.*** This could result in serious neck injuries during a crash.

- ***Do not let a child put the shoulder part of a seat belt behind the back or under the arm.*** This could cause very serious injuries during a crash. It also increases the chance that the child will slide under the belt in a crash and be injured.

- ***Two children should never use the same seat belt.*** If they do, they could be very seriously injured in a crash.

- ***Do not put any accessories on a seat belt.*** Devices intended to improve a child's comfort or reposition the shoulder part of a seat belt can make the belt less effective and increase the chance of serious injury in a crash.

Carbon Monoxide Hazard

Your vehicle's exhaust contains carbon monoxide gas. Carbon monoxide should not enter the vehicle in normal driving if you maintain your vehicle properly and follow the information on this page.

Have the exhaust system inspected for leaks whenever:

- The vehicle is raised for an oil change.
- You notice a change in the sound of the exhaust.
- The vehicle was in a crash that may have damaged the underside.

⚠ WARNING

Carbon monoxide gas is toxic. Breathing it can cause unconsciousness and even kill you.

Avoid any enclosed areas or activities that expose you to carbon monoxide.

High levels of carbon monoxide can collect rapidly in enclosed areas, such as a garage. Do not run the engine with the garage door closed. Even with the door open, run the engine only long enough to move the vehicle out of the garage.

With the hatch open, airflow can pull exhaust gas into your vehicle's interior and create a hazardous condition. If you must drive with the hatch open, open all the windows, and set the climate control system as shown below.

If you must sit in your parked vehicle with the engine running, even in an unconfined area, adjust the climate control system as follows:

1. Select the fresh air mode.
2. Select the mode.
3. Set the fan speed to high.
4. Set the temperature control to a comfortable setting.

These labels are in the locations shown. They warn you of potential hazards that could cause serious injury or death. Read these labels carefully.

If a label comes off or becomes hard to read (except for the U.S. dashboard label which may be removed by the owner), contact your dealer for a replacement.

DASHBOARD

U.S. models only

This Vehicle is Equipped with Advanced Air Bags

Even with Advanced Air Bags

Children can be killed or seriously injured by the air bag.
The back seat is the safest place for children.
Never put a rear-facing child seat in the front.
Always use seat belts and child restraints.
See owner's manual for more information about air bags.

To be removed by owner only.

SUN VISORS

U.S. models

Canadian models

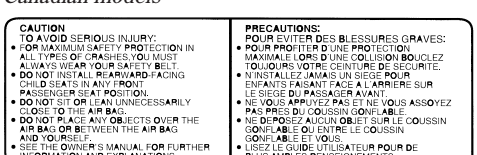

CAUTION
TO AVOID SERIOUS INJURY:
- FOR MAXIMUM SAFETY PROTECTION IN ALL TYPES OF CRASHES,YOU MUST ALWAYS WEAR YOUR SAFETY BELT.
- DO NOT INSTALL REARWARD-FACING CHILD SEATS IN ANY FRONT PASSENGER SEAT POSITION.
- DO NOT SIT OR LEAN UNNECESSARILY CLOSE TO THE AIR BAG.
- DO NOT PLACE ANY OBJECTS OVER THE AIR BAG OR BETWEEN THE AIR BAG AND YOURSELF.
- SEE THE OWNER'S MANUAL FOR FURTHER INFORMATION AND EXPLANATIONS.

PRECAUTIONS:
POUR EVITER DES BLESSURES GRAVES:
- POUR PROFITER D'UNE PROTECTION MAXIMALE LORS D'UNE COLLISION BOUCLEZ TOUJOURS VOTRE CEINTURE DE SECURITE.
- N'INSTALLEZ JAMAIS UN SIEGE POUR ENFANTS FAISANT FACE A L'ARRIERE SUR LE SIEGE DU PASSAGER AVANT.
- NE VOUS APPUYEZ PAS ET NE VOUS ASSOYEZ PAS PRES DU COUSSIN GONFLABLE.
- NE DEPOSEZ AUCUN OBJET SUR LE COUSSIN GONFLABLE OU ENTRE LE COUSSIN GONFLABLE ET VOUS.
- LISEZ LE GUIDE UTILISATEUR POUR DE PLUS AMPLES RENSEIGNEMENTS.

RADIATOR CAP

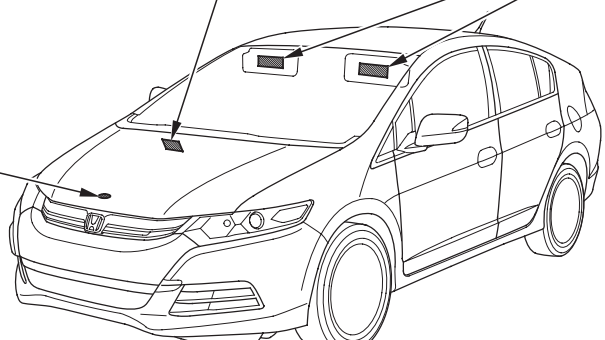

CONTINUED

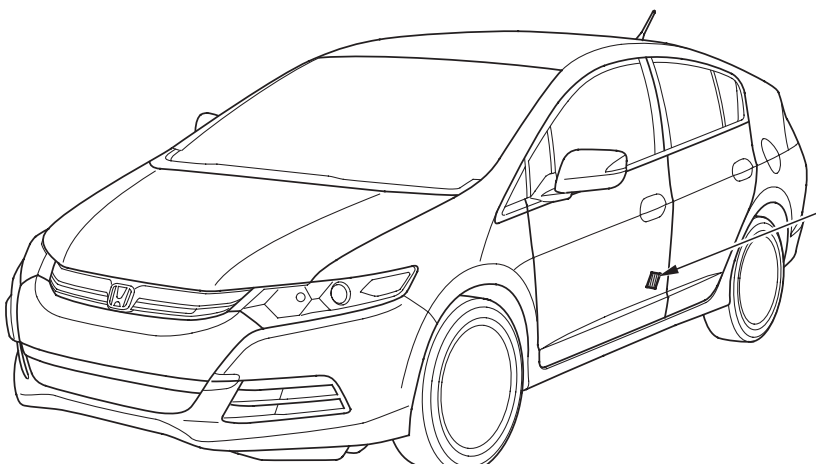

DOORJAMBS

U.S. models

SIDE AIRBAG

- This car is equipped with side airbags in the front seats and side curtain airbags.
- Do not lean against the door.
- See owner's manual for more information.

Canadian models

SIDE AIRBAG

- This car is equipped with side airbags in the front seats and side curtain airbags.
- Do not lean against the door.
- See owner's manual for more information.

COUSSIN GONFLABLE LATERAL

- Cette automobile est équipée de coussins gonflables latéraux dans les sièges avant ainsi que de coussins gonflables latéraux de type rideau.
- Ne vous appuyez pas sur la porte.
- Consultez le Manuel du propriétaire pour en sayoir plus.

This section gives information about the controls and displays that contribute to the daily operation of your vehicle. All the essential controls are within easy reach.

Control Locations 60
Instrument Panel 61
Instrument Panel Indicators..... 62
Gauges 72
Multi-Information Display 75
Controls Near the Steering Wheel 118
Windshield Wipers and Washers 119
Turn Signals and Headlights..... 120
Daytime Running Lights 123
Instrument Panel Brightness 124
Hazard Warning Button..... 125
Rear Window Defogger 126
ECON Button 127
Steering Wheel Adjustments 128
Keys and Locks..... 129
Immobilizer System..... 130
Ignition Switch 131
Door Locks 133
Childproof Door Locks 134
Remote Transmitter..... 135
Hatch 139
Unlocking the Hatch 140
Seats 141
Front Seat Adjustments..... 141
Driver's Seat Height Adjustment 141
Head Restraints 142
Folding the Rear Seats Down .. 145
Armrest..... 146
Mirrors..... 147
Adjusting the Power Mirrors ... 147
Power Mirror Heaters..... 148
Power Windows 149
Parking Brake 151
Interior Convenience Items..... 152
Cargo Area Cover..... 153
Under Floor Storages..... 155
Floor Storage Compartments .. 155
Beverage Holders..... 156
Accessory Power Socket 157
Console Compartment 157
Glove Box 158
Center Tray 158
Center Pockets..... 159
Coat Hook..... 160
Sun Visors..... 160
Vanity Mirror 160
Interior Lights..... 161

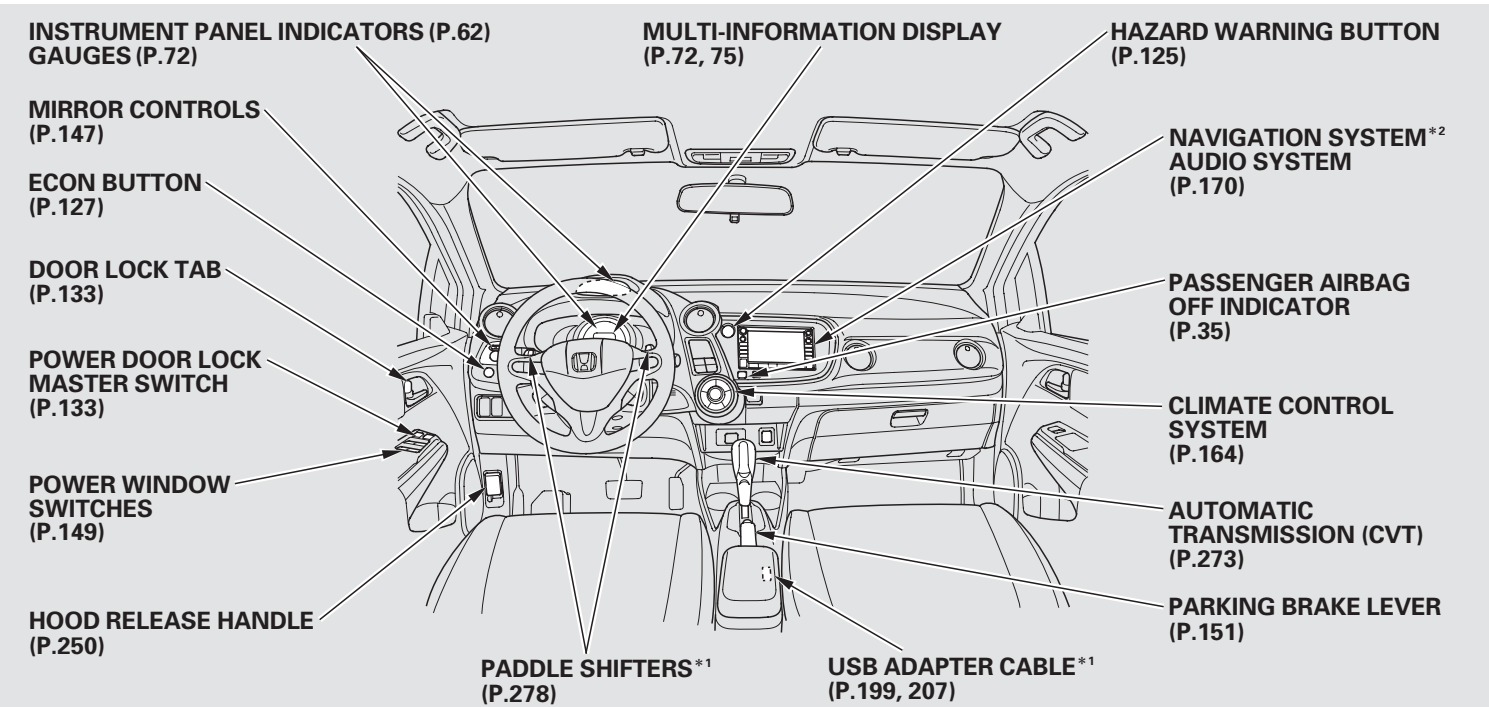

EX model with navigation system is shown.

*1 : If equipped
*2 : Refer to the navigation system manual.

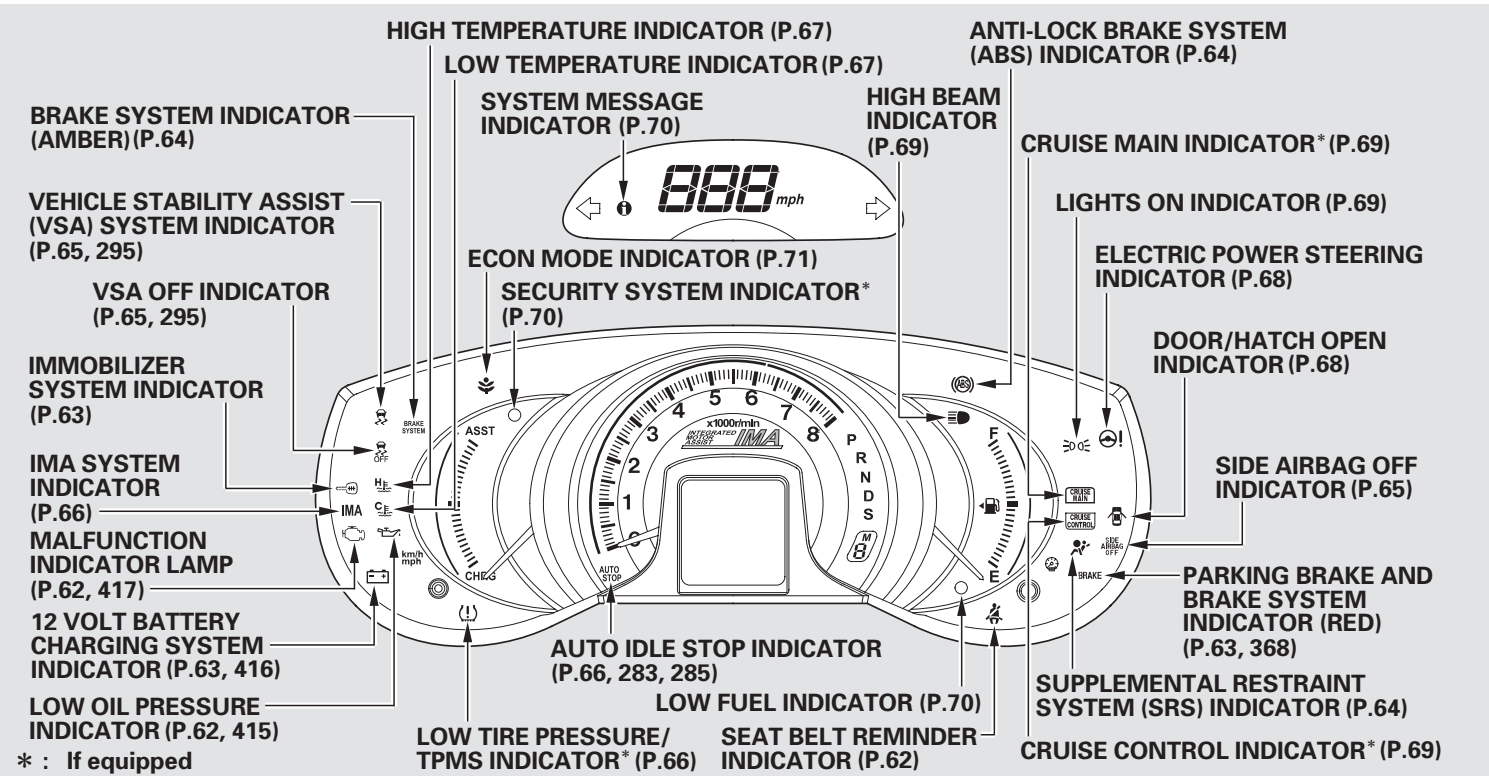

The U.S. instrument panel is shown. Differences for the Canadian models are noted in the text.

The instrument panel has many indicators to give you important information about your vehicle.

Seat Belt Reminder Indicator

This indicator comes on when you turn the ignition switch to the ON (II) position. It reminds you and your passengers to fasten your seat belts. A beeper also sounds if you have not fastened your seat belt.

You will also see a “FASTEN SEAT BELT” message on the multi-information display.

If you turn the ignition switch to the ON (II) position before fastening your seat belt, the beeper sounds and the indicator flashes. If you do not fasten your seat belt before the beeper stops, the indicator stops flashing but remains on.

If your front passenger does not fasten their seat belt, the indicator comes on about 6 seconds after the ignition switch is turned to the ON (II) position.

If either of you do not fasten your seat belt while driving, the beeper will sound and the indicator will flash again at regular intervals, and you will see a “FASTEN SEAT BELT” or “FASTEN PASSENGER SEAT BELT” message on the multi-information display. For more information, see page 21 .

Malfunction Indicator Lamp

You will also see a “CHECK EMISSION SYSTEM” message on the multi-information display. For more information, see page 367 .

Low Oil Pressure Indicator

The engine can be severely damaged if this indicator flashes or stays on when the engine is running, and you will see a “CHECK ENGINE OIL LEVEL” message on the multi-information display. For more information, see page 365 .

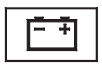

12 Volt Battery Charging System Indicator

If this indicator comes on when the engine is running, the 12 volt battery is not being charged, and you will also see a “CHECK CHARGING SYSTEM” message on the multi-information display. For more information, see page 366 .

Immobilizer System Indicator

This indicator comes on briefly when you turn the ignition switch to the ON (II) position. It will then go off if you have inserted a properly coded ignition key. If it is not a properly coded key, the indicator will blink, and the engine’s fuel system will be disabled (see page 130).

U.S. Canada

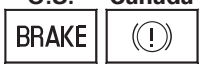

Parking Brake and Brake System Indicator (Red)

This indicator has two functions:

1. It comes on when you turn the ignition switch to the ON (II) position. It is a reminder to check the parking brake. Driving with the parking brake not fully released can damage the brakes and tires.

   If you drive without releasing the parking brake, a beeper will sound, and you will also see a “RELEASE PARKING BRAKE” message on the multi-information display (see page 151).

2. If it stays on after you have fully released the parking brake while the engine is running, or if it comes on while driving, it can indicate a problem in the brake system. You will also see a “BRAKE FLUID LOW” or “CHECK BRAKE SYSTEM” message on the multi-information display. For more information, see page 368 .

U.S. Canada

Brake System Indicator (Amber)

This indicator normally comes on for a few seconds when you turn the ignition switch to the ON (II) position, and START (III) position. When the brake system indicator (amber) comes on and stays on, there is a problem with the Creep Aid System or Brake Assist (the normal brake operates properly). Have your vehicle checked by your dealer. For more information, see page 287 .

You will also see a “CHECK BRAKE SYSTEM” message on the multi-information display (see page 89).

Anti-lock Brake System (ABS) Indicator

This indicator normally comes on for a few seconds when you turn the ignition switch to the ON (II) position. If it comes on at any other time, there is a problem with the ABS. If this happens, have your vehicle checked at a dealer. With this indicator on, your vehicle still has normal braking ability but no anti-lock function. For more information, see page 289 .

You will also see a “CHECK ABS SYSTEM” message on the multi-information display (see page 89).

Supplemental Restraint System Indicator

This indicator comes on briefly when you turn the ignition switch to the ON (II) position. If it comes on at any other time, it indicates a potential problem with your front airbags. This indicator will also alert you to a potential problem with your airbag system components. For more information, see page 34 .

You will also see a “CHECK AIRBAG SYSTEM” message on the multi-information display (see page 89).

U.S. Canada

Side Airbag Off Indicator

This indicator comes on briefly when you turn the ignition switch to the ON (II) position. If it comes on at any other time, it indicates that the passenger's side airbag has automatically shut off. You will also see a "PASSENGER SIDE AIRBAG OFF" message on the multi-information display. For more information, see page 34 .

Vehicle Stability Assist (VSA) System Indicator

This indicator has two functions:

1. It flashes when VSA is active (see page 295).

2. If it comes on and stays on at any other time, there is a problem with the VSA or hill start assist system. Take your vehicle to a dealer to have it checked. Without VSA, your vehicle still has normal driving ability, but will not have VSA traction and stability enhancement. See page 295 for more information on the VSA system.

If the VSA indicator illuminates, hill start assist will not be working. Without hill start assist, the vehicle will roll downhill immediately when you release the brake on an incline.

You will also see a "CHECK VSA SYSTEM" or "CHECK HILL START ASSIST SYSTEM" message on the multi-information display (see page 90).

VSA OFF Indicator

It comes on as a reminder that you have turned off the vehicle stability assist (VSA) system.

This indicator normally comes on for a few seconds when you turn the ignition switch to the ON (II) position. For more information, see page 295 .

IMA System Indicator

This indicator normally comes on for a few seconds when you turn the ignition switch to the ON (II) position. If it comes on at any other time, it indicates a problem in the integrated motor assist (IMA) system. With the IMA indicator on, the vehicle may not accelerate as it normally does. Have the vehicle checked by the dealer as soon as possible.

You will also see a “CHECK IMA SYSTEM” message on the multi-information display.

Auto Idle Stop Indicator

See pages 283 and 285 .

Low Tire Pressure/ TPMS Indicator

U.S. models only

This indicator normally comes on for a few seconds when you turn the ignition switch to the ON (II) position.

This indicator has two functions:

1. If it comes on while driving, it indicates that one or more of your vehicle’s tires are significantly low on pressure.

You will also see a “CHECK TIRE PRESSURE” message on the multi-information display (see page 291).

If this happens, pull to the side of the road when it is safe, check which tire has lost pressure, and determine the cause. If it is because of a flat tire, replace the flat tire with the compact spare (see page 351), and have the flat tire repaired as soon as possible. If two or more tires are underinflated, call a professional towing service. Refer to page 376 for more information.

2. If this indicator begins to flash, there is a problem with the tire pressure monitoring system (TPMS). You will also see a “CHECK TPMS SYSTEM” message on the multi-information display. The indicator continues to flash for a while (approximately 1 minute), then stays on. If this happens, have your dealer check the system as soon as possible. For more information, see page 292 .

High Temperature Indicator

This indicator shows the temperature of the engine coolant. It normally comes on when you turn the ignition switch to the ON (II) position and goes off after a few seconds. In normal driving conditions, this indicator should not blink or stay on. In severe driving conditions, such as very hot weather or a long period of uphill driving, this indicator may blink. This means the engine coolant temperature is high. If the indicator begins to blink while you are driving, be sure to slow down to prevent overheating. If the indicator stays on, pull safely to the side of the road and turn off the engine. See page 362 for instructions and precautions on checking the engine's cooling system.

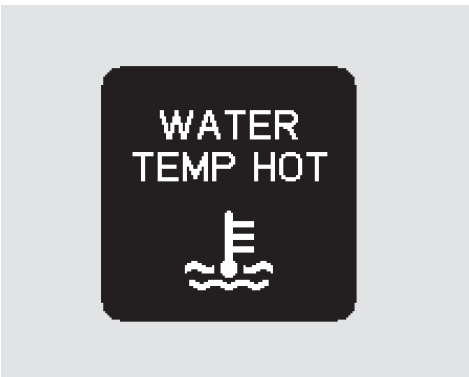

If the indicator begins to blink or stays on, you will also see a "WATER TEMP HOT" message on the multi-information display. This warning will alert you that the engine should be cooled down.

Do not drive the vehicle while the indicator is on or the engine may be damaged.

Low Temperature Indicator

This indicator shows the temperature of the engine coolant. If there is no problem, this indicator comes on when the engine is cold. If it comes on when the engine is warm (normal operating temperature), have the vehicle inspected by your dealer as soon as possible.

Electric Power Steering (EPS) Indicator

This indicator normally comes on when you turn the ignition switch to the ON (II) position and goes off after the engine starts. If it comes on at any other time, there is a problem in the electric power steering system.

If this happens, stop the vehicle in a safe place and turn off the engine. Reset the system by restarting the engine. The indicator will stay on, but should go off after driving a short distance. If it does not go off, or comes back on again while driving, take the vehicle to your dealer to have it checked. With the indicator on, the EPS may be turned off, making the vehicle harder to steer.

If you turn the steering wheel to the full left or right position repeatedly while stopping or driving at very low speed, you may feel slightly harder steering in order to prevent damage to the steering system caused by overheating. This may also happen if you hold the steering wheel on the full left or right position for a while.

You will also see a “CHECK POWER STEERING SYSTEM” message on the multi-information display.

Door/Hatch Open Indicator

This indicator comes on red if any door or the hatch lid is not closed tightly.

You will also see a corresponding indicator(s) on the multi-information display to indicate which door and/ or the hatch is not closed tightly (see page 12).

Turn Signal and Hazard Warning Indicators

The left or right turn signal indicator blinks when you signal a lane change or turn. If an indicator does not blink or blinks rapidly, it usually means one of the turn signal bulbs is burned out (see pages 327 and 329). Replace the bulb as soon as possible, since other drivers cannot see that you are signaling.

When you press the hazard warning button, both turn signal indicators and all turn signals on the outside of the vehicle flash.

Lights On Indicator

This indicator reminds you that the exterior lights are on. It comes on when the light switch is in either the or position. If you turn the ignition switch to the ACCESSORY (I) or the LOCK (0) position without turning off the light switch, this indicator will remain on. A reminder chime will also sound when you open the driver's door.

High Beam Indicator

This indicator comes on with the high beam headlights. For more information, see page 121 .

This indicator also comes on with reduced brightness when the daytime running lights (DRL) are on (see page 123).

Cruise Main Indicator

On LX and EX models

This indicator comes on when you turn on the cruise control system by pressing the CRUISE button on the steering wheel (see page 224).

Cruise Control Indicator

On LX and EX models

This indicator comes on when you set the cruise control. See page 224 for information on operating the cruise control.

Low Fuel Indicator

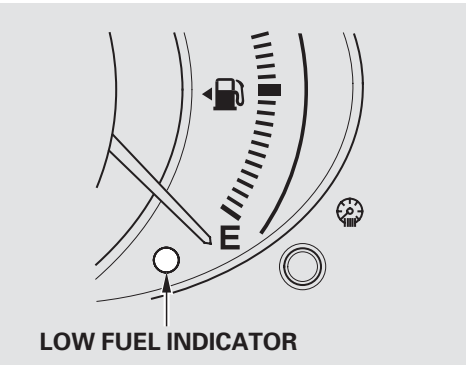

This indicator is in the fuel gauge. It comes on as a reminder that you must refuel soon. You will also see a "FUEL LOW" message on the multi-information display.

When the indicator comes on, there are about 1.8 U.S. gal (6.9 ℓ) of fuel remaining in the tank.
When the needle reaches E, there is a very small amount of fuel in the tank.

System Message Indicator

This indicator comes on when there is a system message on the multi-information display. Press the INFO button on the steering wheel (see page 76) to see the message (see page 89).

Most of the time, this indicator comes on along with other indicators in the instrument panel such as the seat belt reminder indicator, SRS indicator, VSA system indicator, etc.

Security System Indicator

On LX and EX models

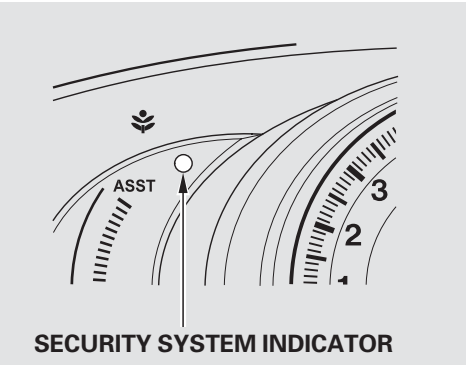

This indicator comes on when the security system is set. For more information, see page 223 .

ECON Mode Indicator

This indicator normally comes on for a few seconds when you turn the ignition switch to the ON (II) position. When you turn the econ mode on by pressing the ECON button with the ignition switch in the ON (II) position, this indicator will come on.

You will also see the symbol on the multi-information display with ECON ON or ECON OFF (see page 75).

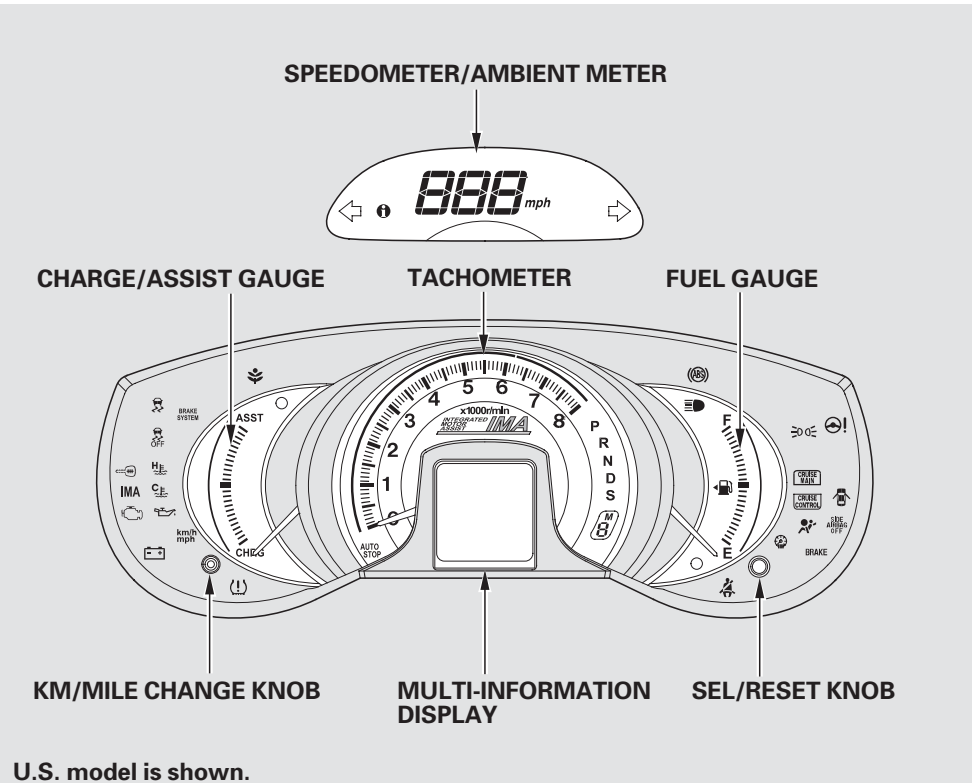

U.S. model is shown.

Speedometer/Ambient Meter
This shows your speed in kilometers per hour (km/h) or miles per hour (mph) depending on the selected speedometer display. You can switch the display between km/h and mph (see page 73).

The speedometer also has an ambient meter. The color of the ambient meter changes automatically according to your driving style (see page 268).

You can customize the setting of the ambient meter (see page 103).

Sel/Reset Knob

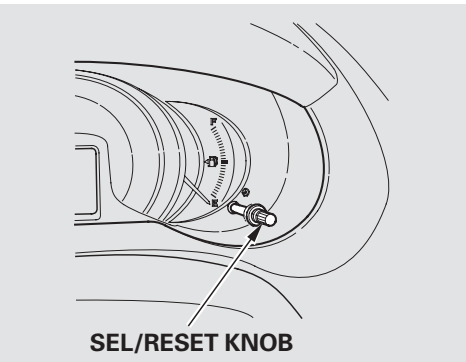

To switch the lower segment of the multi-information display between the odometer with the outside temperature and trip meter with the outside temperature, press the sel/reset knob repeatedly. For more information, see page 78 .

Km/Mile Change Knob

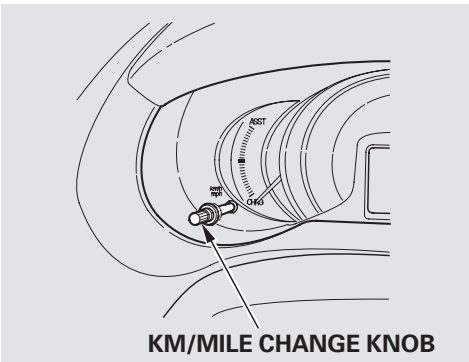

Each time you press and hold the km/mile change knob, the speedometer reading switches between miles per hour (mph) and kilometers per hour (km/h).

Fuel Gauge

This shows how much fuel you have. It may show slightly more or less than the actual amount. The needle returns to the bottom after you turn off the ignition.

NOTICE

Avoid driving with an extremely low fuel level. Running out of fuel could cause the engine to misfire, damaging the catalytic converter.

Charge/Assist Gauge

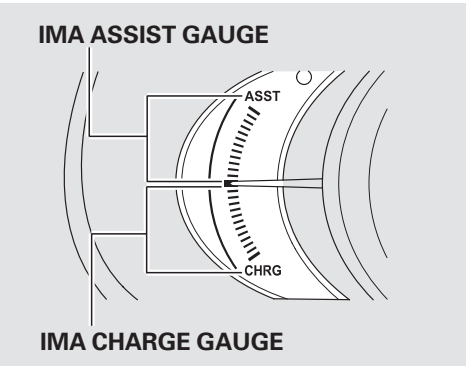

This gauge shows you the charge/discharge status of the Integrated Motor Assist (IMA). When the IMA is assisting the engine, the pointer stays in the assist gauge (upper part of the gauge). When the IMA battery is being charged, the pointer stays in the charge gauge (lower part of the gauge).

You can also check the status of the IMA system function on the multi-information display (see page 84).

If the IMA battery is too hot or too cold, the IMA system limits the IMA battery's output power to protect the battery. This disables the IMA assist and auto idle stop, even though the battery level indicator on the multi-information display may show that the battery is well-charged (see page 85). Therefore, if the motor assist is frequently used, the battery becomes hot and starts to limit its output power.

It takes a short time to normalize the IMA battery's output power depending on the weather.

The multi-information display in the instrument panel displays various information and messages when the ignition switch is in the ON (II) position. Some of the messages help you operate your vehicle more comfortably. Others help to keep you aware of the periodic maintenance your vehicle needs for continued trouble-free driving.

There are three types of messages: normal display messages, engine oil life and maintenance messages, and system messages.

You can select the displayed language and also customize some vehicle control settings to your liking with the multi-information display and the three buttons on the steering wheel (see page 76).

Normal Display Messages

You will see an “ECON ON” or “ECON OFF” message on the multi-information display according to the previous ECON setting when you turn the ignition switch to the ON (II) position (see page 127).

If you do not fasten your seat belt, you will see a “FASTEN SEAT BELT” message on the multi-information display when you turn the ignition switch to the ON (II) position.

These messages go off several seconds after the key is inserted into the ignition switch.

CONTINUED

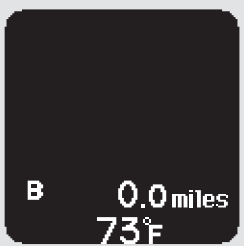

U.S. model is shown.

The multi-information display changes to the blank display shown above several seconds after you turn the ignition switch to the ON (II) position.

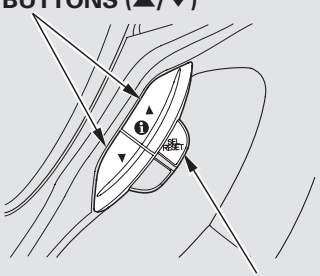

LX and EX models

With the ignition switch in the ON (II) position, the multi-information display changes as shown on page 78 each time you press the INFO (▲/▼) button or SEL/RESET button.

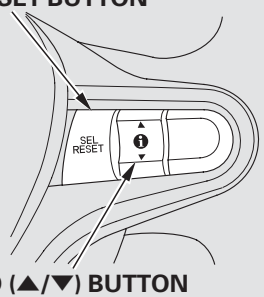

Insight model

In the multi-information display, the system message is also displayed (see page 88) and you can customize your vehicle control settings (see page 91).

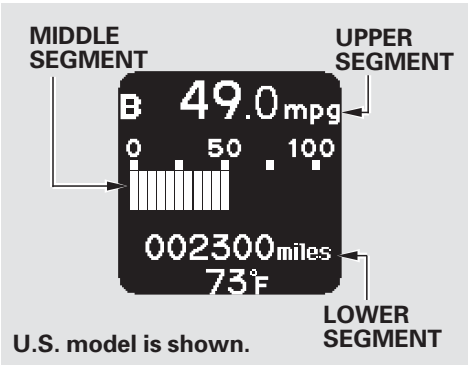

U.S. model is shown.

The multi-information display consists of an upper segment, a middle segment and a lower segment.

In the normal display mode, the upper and middle segments display trip computer information, such as fuel economy or average speed. The lower segment displays the odometer/trip meter (A/B), outside temperature, and engine oil life and maintenance item code(s).

CONTINUED

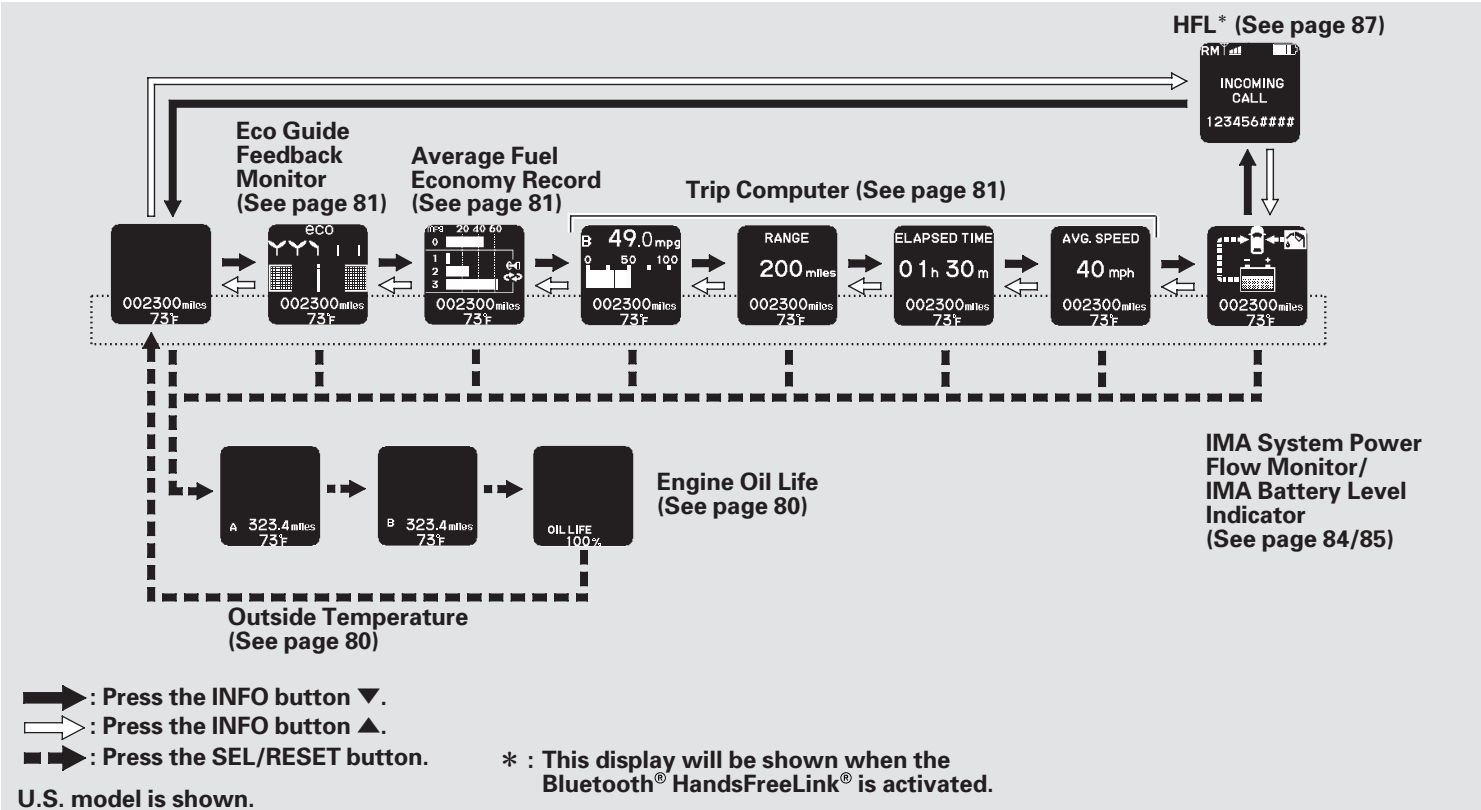
HFL* (See page 87)
INCOMING CALL
123456####
Eco Guide Feedback Monitor (See page 81)
Average Fuel Economy Record (See page 81)
Trip Computer (See page 81)
002300miles 73°F
eco
mpg 20 40 60
0
1
2
3
B 49.0mpg
0 50 100
RANGE
200miles
ELAPSED TIME
01h 30m
AVG. SPEED
40mph
A 323.4miles
B 323.4miles
OIL LIFE 100%
Engine Oil Life (See page 80)
IMA System Power Flow Monitor/ IMA Battery Level Indicator (See page 84/85)
Outside Temperature (See page 80)
: Press the INFO button ▼.
: Press the INFO button ▲.
: Press the SEL/RESET button.
U.S. model is shown.
* : This display will be shown when the Bluetooth® HandsFreeLink® is activated.

Odometer

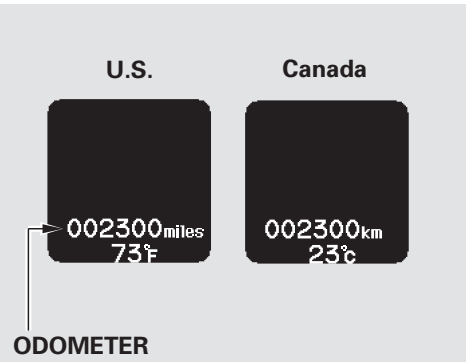

The odometer shows the total distance your vehicle has been driven. It measures miles in U.S. models and kilometers in Canadian models. It is illegal under U.S. federal law and Canadian provincial/ territorial regulations to disconnect, reset, or alter the odometer with the intent to change the number of miles or kilometers indicated.

Trip Meter

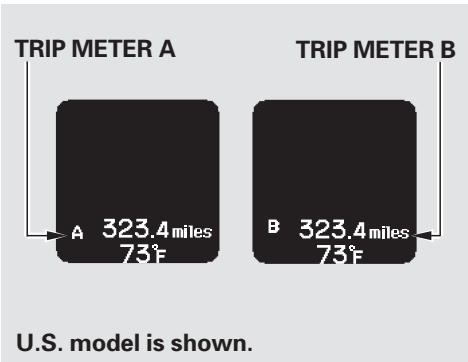

This meter shows the number of miles (U.S.) or kilometers (Canada) driven since you last reset it. There are two trip meters: Trip A and Trip B. Each trip meter works independently, so you can keep track of two different distances.

To reset a trip meter, display it, then press and hold the SEL/RESET button until the number resets to “0.0”.

When you reset Trip A, average fuel economy A is reset at the same time. When you reset Trip B, average fuel economy B is reset.

In the customizing mode, you can set Trip A and average fuel economy A to reset when you refuel your vehicle (see page 99).

Outside Temperature

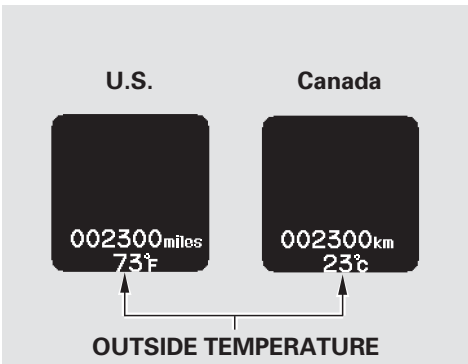

This shows the outside Fahrenheit temperature in U.S. models, and Celsius temperature in Canadian models.

The temperature sensor is in the front bumper. The temperature reading can be affected by heat reflection from the road surface, engine heat, and the exhaust from surrounding traffic. This can cause an incorrect temperature reading when your vehicle speed is under 19 mph (30 km/h). When you start your trip, the sensor is not fully acclimatized, therefore it may take several minutes until the proper temperature is displayed.

In certain weather conditions, temperature readings near freezing (32°F, 0°C) could mean that ice is forming on the road surface.

You can adjust the outside temperature display (see page 98).

Engine Oil Life

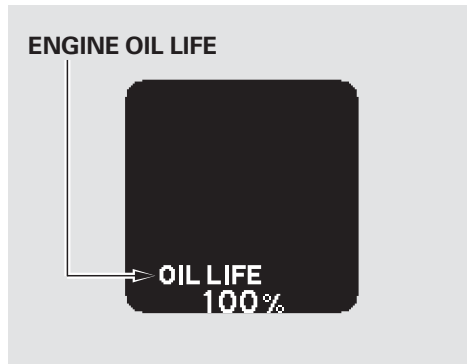

This shows the remaining engine oil life. It shows 100% after the engine oil is replaced and the display is reset. The engine oil life is calculated based on engine operating conditions. For more information, see page 301 .

Eco Guide Feedback Monitor

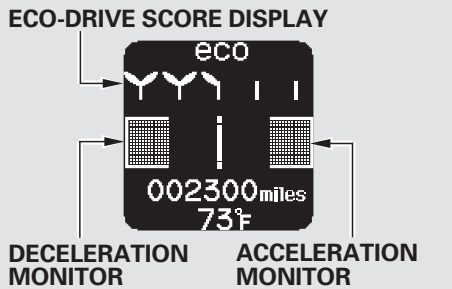

U.S. model is shown.

Eco guide feedback monitor consists of three parts. The eco-drive score display shows the accumulated eco score for one driving cycle. The acceleration monitor shows acceleration efficiency. The deceleration monitor shows deceleration efficiency. See page 267 for more information.

Average Fuel Economy Records

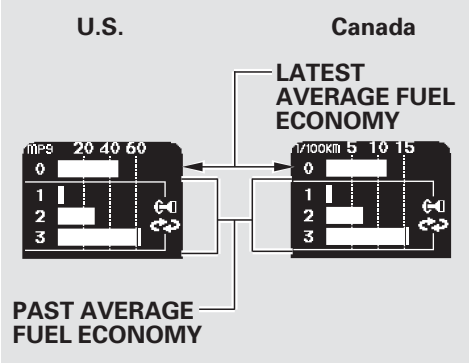

The average fuel economy records display shows the average fuel economy (0) for the current driving cycle and (1-3) for the last three driving cycles in mpg (U.S. models) or l/100 km (Canadian models).

Trip Computer

Indicators in the trip computer show:

- Average Fuel Economy
- Instant Fuel Economy
- Range
- Elapsed Time
- Average Vehicle Speed

CONTINUED

Instant Fuel Economy

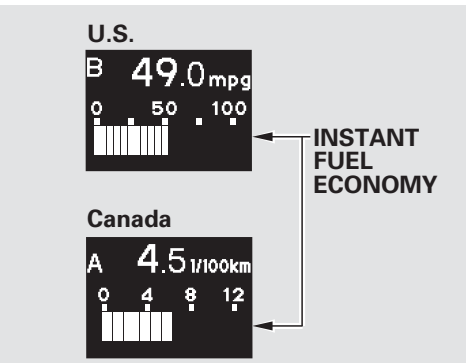

Mile indication (U.S. models)
: This shows your vehicle's instant fuel economy in mpg.

Kilometer indication (Canadian models)
: This shows your vehicle's instant fuel economy in l/100 km.

When you turn off the engine, the instant fuel economy (mpg or l/100 km) is also reset.

Average Fuel Economy A/B

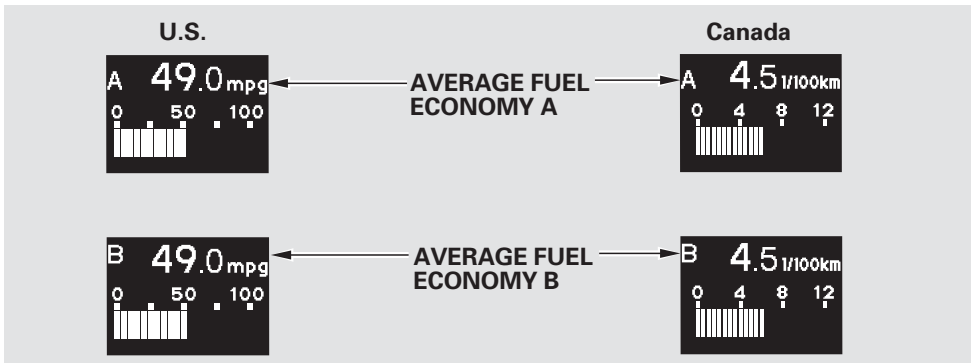

Average Fuel Economy A
: This shows your vehicle's average fuel economy in mpg (U.S. models) or l/100 km (Canadian models) since you last reset trip computer A.

Average Fuel Economy B
: This shows your vehicle's average fuel economy in mpg (U.S. models) or l/100 km (Canadian models) since you last reset trip computer B.

The average fuel economy will be reset when you reset the trip meter, or if the vehicle's 12 volt battery goes dead or is disconnected.

You can customize the Trip A and Average Fuel Economy A reset condition on the multi-information display (see page 99).

RANGE
This shows the estimated distance you can travel on the fuel remaining in the fuel tank. This distance is estimated from the fuel economy you received over the last several miles (U.S.) or kilometers (Canada), so it will vary with changes in speed, traffic, etc.

ELAPSED TIME
This shows the accumulated traveling time since you last reset it. When you turn the ignition switch to the ON (II) position, ELAPSED TIME is reset.

If you want to reset the ELAPSED TIME manually, go to the trip computer's ELAPSED TIME display, and press and hold the SEL/RESET button until the number resets.

You can customize the ELAPSED TIME reset conditions on the multi-information display (see page 100).

AVG. SPEED
This shows the average speed you are traveling in miles per hour (mph) for U.S. models or kilometers per hour (km/h) for Canadian models.

To reset the AVG. SPEED reading, press and hold the SEL/RESET button until the number resets.

IMA System Power Flow Monitor

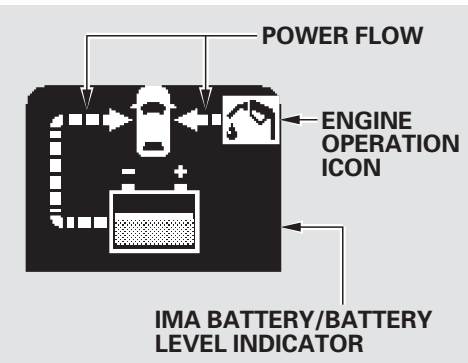

The IMA system power flow monitor shows the status of the IMA system. The energy source, and powering status of the engine and IMA motor (engine operation icon and IMA battery) are represented by arrows on the display The battery level indicator shows the state of charge of the IMA battery.

Powering Status

The table in the next column shows the basic monitoring display examples and their descriptions.

Descriptions	Example
Only IMA motor is powering the vehicle and IMA battery is discharging.	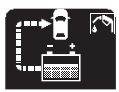
IMA motor is assisting the engine with powering the vehicle. IMA battery is discharging and the system is consuming fuel.	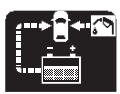
IMA system is charging IMA battery.	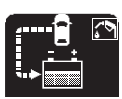
Only engine is powering vehicle. The system is consuming fuel.	
Engine is powering vehicle and IMA system is charging IMA battery. The system is consuming fuel.	

IMA Battery Level Indicator

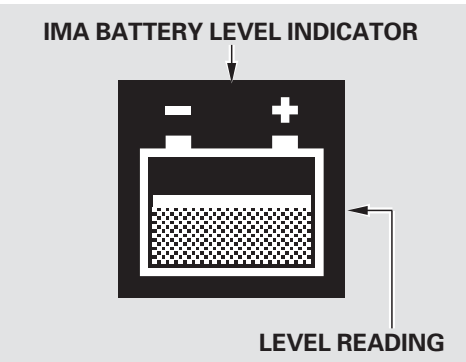

The IMA battery level indicator shows you the state of charge of the battery for the Integrated Motor Assist (IMA). This battery is recharged and discharged by the IMA motor depending on the driving conditions.

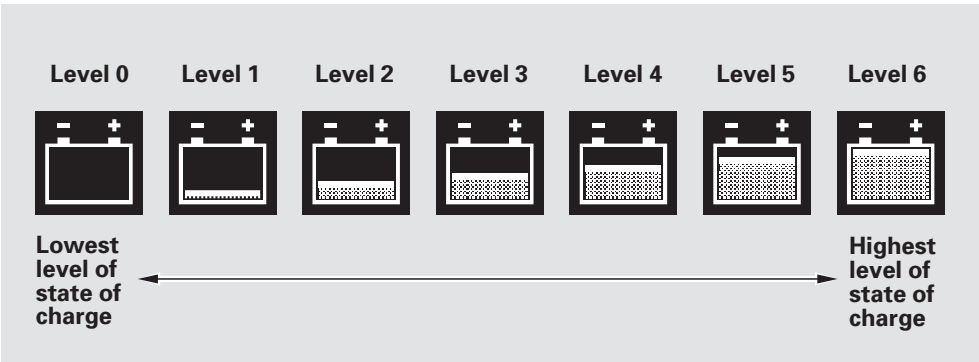

The position of the battery level reading shows the state of charge of the IMA battery. When the battery level reading is high, the IMA battery is well charged. There are seven positions (Level 0-Level 6) of the battery level reading.

The battery level reading may drop near the bottom under driving conditions that require IMA motor assistance for a long time, such as prolonged acceleration or climbing a long hill.

The IMA motor will recharge the battery as you continue driving.

CONTINUED

On vehicle with paddle shifters
The IMA battery is charged at a higher rate when the transmission is in L (Low) mode (see page 282).

On vehicle without paddle shifters
The IMA battery is charged at a higher rate when the transmission is in LOW (L) range (see page 276).

If the battery is mostly discharged, the auto idle stop function is disabled (see page 283).

The battery level gauge does not read the battery level directly. It calculates the level by continuously measuring the current flow, voltage, and temperature.

Since the level is not read directly, small sensing errors can, over time, cause the gauge to read higher than the actual battery level. The system will then perform a correction, and the battery level gauge reading will drop suddenly. When this happens, IMA assist and Auto Idle Stop are disabled until the IMA battery is sufficiently recharged by normal driving.

This correction of the battery level gauge is normal and does not indicate a problem. If the IMA battery develops a problem or becomes deteriorated, the IMA system indicator will come on. If this happens, have the vehicle checked by your dealer as soon as possible.

Bluetooth® HandsFreeLink®

On models with navigation system
You can receive or make phone calls from your cell phone through your vehicle's *Bluetooth*® HandsFreeLink® (HFL) system without touching your cell phone.

To use the system, your cell phone and the HFL system must be linked. Not all cell phones are compatible with this system. Refer to page 227 for instructions on how to link your cell phone to HFL and how to receive or make phone calls, or visit the handsfreelink.com website. In Canada, visit *www.handsfreelink.ca*, or call (888) 528-7876.

System Messages

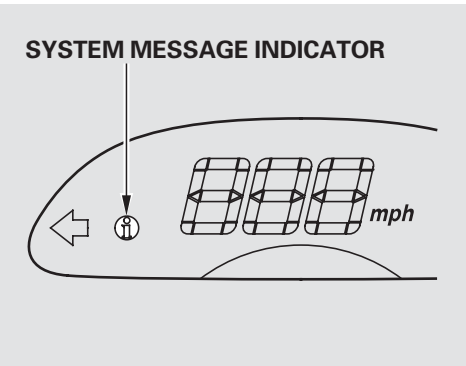

If there is a problem with your vehicle, for example the engine oil level is low or a door is not fully closed, the multi-information display will show you the problem. It does this by interrupting the current display with one or more messages.

The system message(s) triggers the appropriate indicator(s) on the instrument panel, including the system message indicator, to come on. The system message indicator does not go off until the problem(s) is corrected.

You will also hear a beep when the system message comes on for the first time.

Most of the messages are displayed for about 5 seconds, and then the normal display returns. If there are several system messages to be shown, the display switches these messages every 5 seconds.

To switch the message(s) before 5 seconds have elapsed, press the INFO (▲/▼) button on the steering wheel.

Even if you press the INFO (▲/▼) button, some messages stay on or come on again at regular intervals until the problem is corrected.

If the system message indicator remains lit on the instrument panel, you can see the corresponding message(s) again by pressing the INFO (▲/▼) button repeatedly.

Here is a list of all messages:

DOOR & HATCH OPEN	See page 12
DOOR OPEN	See page 13
HATCH OPEN	See page 13
FASTEN SEAT BELT	See page 21
FASTEN PASSENGER SEAT BELT	See page 21
CHECK AIRBAG SYSTEM	See page 34

U.S. PASSENGER SIDE AIRBAG OFF / SIDE AIRBAG OFF Canada PASSENGER SIDE AIRBAG OFF	See page 34
RELEASE PARKING BRAKE / BRAKE	See page 151
BRAKE FLUID LOW / BRAKE	See page 321
U.S. CHECK BRAKE SYSTEM / BRAKE SYSTEM Canada CHECK BRAKE SYSTEM	See page 64

CHECK BRAKE SYSTEM / BRAKE	See page 368
CHECK EMISSION SYSTEM	See page 367
CHECK CHARGING SYSTEM	See page 366
CHECK ABS SYSTEM / ABS	See page 289
CHECK ENGINE OIL LEVEL	See page 365
CHECK IMA SYSTEM / IMA	See page 66

CONTINUED

	CHECK VSA SYSTEM CHECK HILL START ASSIST SYSTEM	See page 295
U.S. only	CHECK TIRE PRESSURE	See page 291
U.S. only	CHECK TPMS SYSTEM TPMS	See page 292
	WATER TEMP HOT	See page 362
	CHECK TRANSMISSION	See page 273

	FUEL LOW	See page 70
	CHECK POWER STEERING SYSTEM	See page 68
	RETURN IGNITION SWITCH TO LOCK (0) POSITION	See page 131
	ACCESSORY (I) POSITION	See page 131
	REMOVE KEY	See page 132
Canada only	WASHER FLUID LOW	See page 319

	CHECK DRL SYSTEM DRL	See page 123
	SERVICE DUE SOON A12345	See page 302
	SERVICE DUE NOW A12345	See page 303
	SERVICE PAST DUE A12345	See page 304
	TIGHTEN FUEL CAP	See page 249
		See page 80

Customized Settings

You can customize some vehicle control settings. To enter the customizing mode, press and hold either INFO button (▲/▼) for more than 3 seconds. To change the settings, the ignition switch must be in the ON (II) position, and the vehicle must be stopped with the transmission in Park.

If you turn the ignition switch to the ACCESSORY (I) or the LOCK (0) position, or move the shift lever out of Park, the display will change to the normal screen.

If you try to enter the customizing mode while the vehicle is moving, you will see a “MUST STOP AND SHIFT TO PARK TO CHANGE SETTINGS” message and you cannot change the settings.

If you want to change any vehicle control settings, select CHG SETTING, then press the SEL/RESET button.

Refer to the table on the following pages about the settings you want to customize.

CONTINUED

Group Setup	Menu Item	Description	Setting Option		Page
METER SETUP (P.96)	LANGUAGE SELECTION	Changes the language used in the display.	ENGLISH*		97
			FRENCH		
			SPANISH		
	ADJUST OUTSIDE TEMP. DISPLAY	Changes the outside temperature reading above or below its current reading.	−5°F ~ ±0°F* ~ 5°F (U.S.)		98
			−3°C ~ ±0°C* ~ 3°C (Canada)		
	TRIP A RESET with REFUEL	Causes trip meter A and the average fuel economy to reset when you refuel.	ON		99
			OFF*		
	ELAPSED TIME RESET	Resets the elapsed time of your current trip.	IGN OFF*	TRIP B	100
			TRIP A		
	DISPLAY KM/MILES	Changes the displayed measurement on the multi-information display.	AUTO*		101
			KM		
			MILES		
	METER COLOR CHANGE	Turn the ambient meter feature on or off.	ON*		103
			OFF		
LIGHTING SETUP (P.104)	INTERIOR LIGHT DIMMING TIME	Changes how long (in seconds) the interior lights stay on after you close the doors.	60sec	15sec	105
			30sec*		
	AUTO LIGHT SENSITIVITY	Changes the timing of when the headlights come on. The headlight switch needs to be in the AUTO position.	MAX	LOW	106
			HIGH	MIN	
			MID*		

*: Default setting

Group Setup	Menu Item	Description	Setting Option		Page
DOOR SETUP (P.108)	AUTO DOOR LOCK	Changes when the doors automatically lock.	SHIFT FROM P		109
			WITH VEH SPD*		
			OFF		
	AUTO DOOR UNLOCK	Changes when the doors automatically unlock.	SHIFT TO P*	DRIVER DOOR*/ ALL DOORS	110
			IGN OFF		
			OFF		
	DOOR LOCK MODE	Changes which doors unlock with the remote transmitter in a first push.	DRIVER DOOR*		112
			ALL DOORS		
	KEYLESS LOCK ACKNOWLEDGMENT	The exterior lights flash each time you press the LOCK or UNLOCK button. A beeper will also sound when you press the LOCK button twice.	ON*		114
			OFF		
	SECURITY RELOCK TIMER	Changes how long it takes (in seconds) for the doors to relock and the security system to set after you unlock but do not open the door.	90sec		115
			60sec		
			30sec*		
DEFAULT ALL (P.117)		Set/Cancel all the customized settings as default.	SET		117
			CANCEL		

* : Default setting

Customize Settings
You can customize some of the vehicle control settings to your preference. Here are the settings you can customize:

- METER SETUP
- LIGHTING SETUP
- DOOR SETUP

When you want to change the vehicle control settings, press the INFO (▲/▼) button to select CHG SETTING, then press the SEL/RESET button.

Each time you press the INFO (▲/▼) button, the screen changes as shown on the next page. Press the INFO (▲/▼) button until you see the setup you want to customize, then press the SEL/RESET button to enter your selection.

If you do not make any changes, select “EXIT.” The display returns to the normal display.

You can also use the select/reset knob in the instrument panel. Turn the knob to select a setting and press it to enter your selection.

If you want the settings as they were when the vehicle left the factory, select DEFAULT ALL, as described on page 117 .

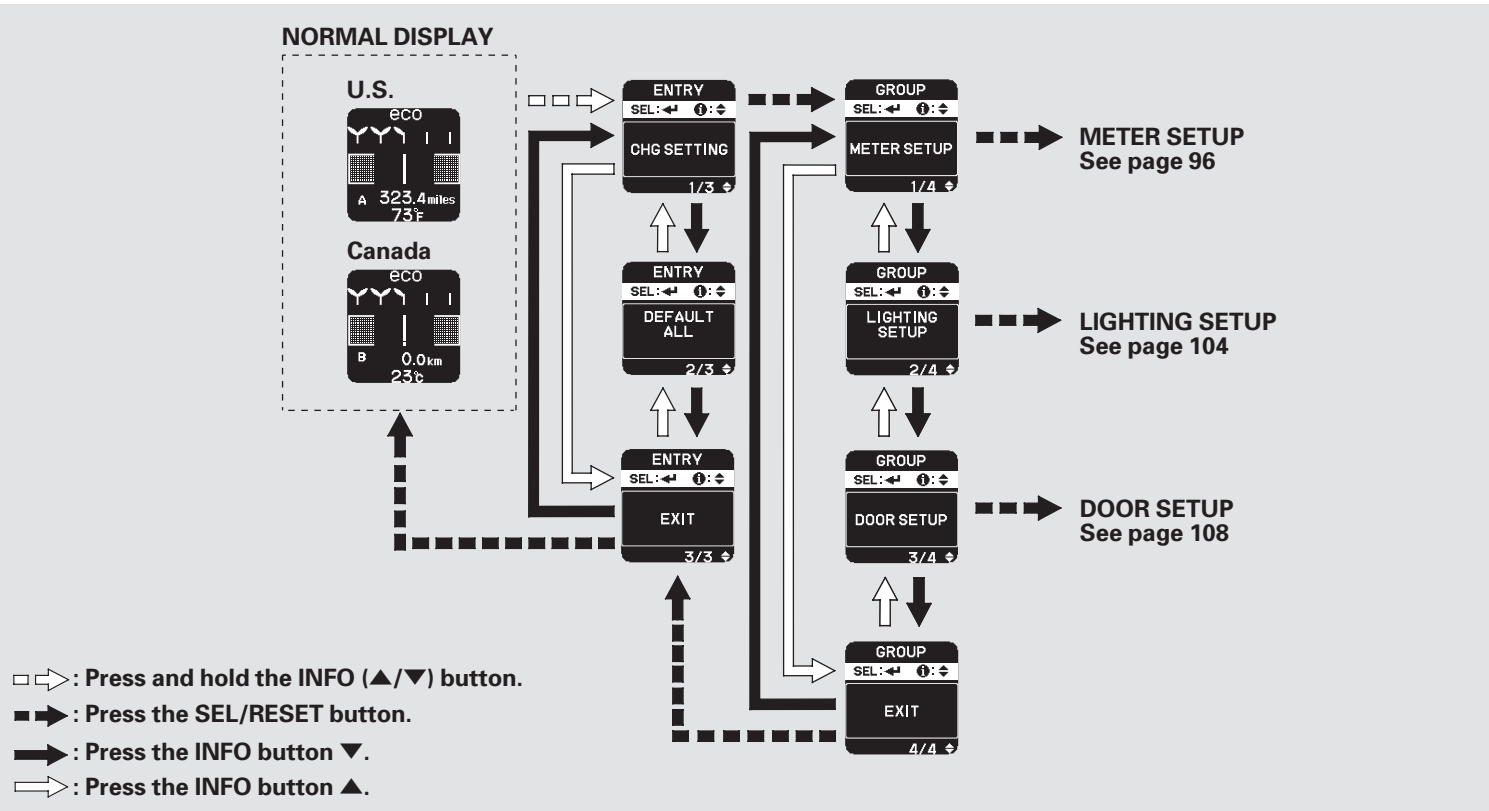
NORMAL DISPLAY
U.S.
eco
A 323.4 miles
73°F
Canada
eco
B 0.0 km
23°C
ENTRY
SEL:
CHG SETTING
1/3
ENTRY
SEL:
DEFAULT ALL
2/3
ENTRY
SEL:
EXIT
3/3
GROUP
SEL:
METER SETUP
1/4
GROUP
SEL:
LIGHTING SETUP
2/4
GROUP
SEL:
DOOR SETUP
3/4
GROUP
SEL:
EXIT
4/4
METER SETUP
See page 96
LIGHTING SETUP
See page 104
DOOR SETUP
See page 108
: Press and hold the INFO (▲/▼) button.
: Press the SEL/RESET button.
: Press the INFO button ▼.
: Press the INFO button ▲.

Meter Setup
Here are the four custom settings for the meter setup:

- LANGUAGE SELECTION
- ADJUST OUTSIDE TEMP. DISPLAY
- TRIP A RESET with REFUEL
- ELAPSED TIME RESET
- DISPLAY KM/MILES
- METER COLOR CHANGE

While "METER SETUP" is shown, press the SEL/RESET button to enter the customize mode.

Each time you press the INFO (▲/▼) button, the screen changes as shown in the illustration. Press the INFO (▲/▼) button until you see the setting you want to customize, then press the SEL/RESET button to enter your selection.

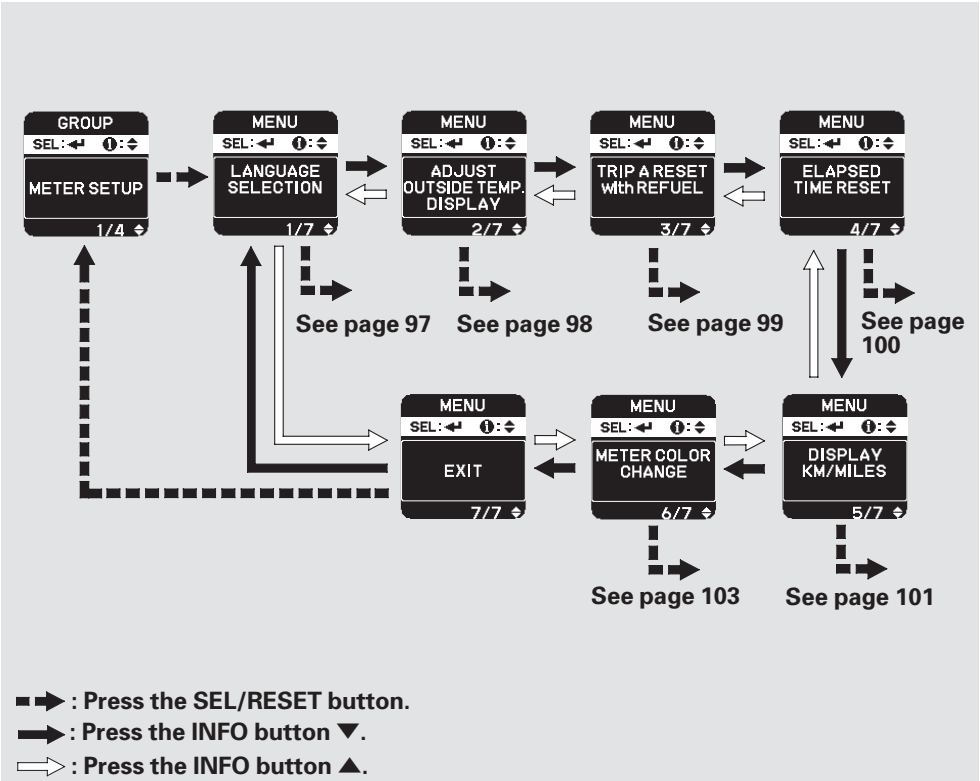

Language Selection

There are three language selections you can make: English, French, and Spanish. To choose the language you want, follow these instructions:

You can choose this item to customize from “METER SETUP” by pressing the INFO (▲/▼) button repeatedly.

Press the SEL/RESET button to see the selections.

Select the desired language by pressing the INFO (▲/▼) button, then enter your selection by pressing the SEL/RESET button.

When your selection is successfully completed, the display changes as shown above, and then goes back to the customizable item screen.

If the “SETTING INCOMPLETE” message appears, go back to “LANGUAGE SELECTION” and repeat the procedure again.

CONTINUED

Adjust Outside Temp. Display

If you sometimes find that the temperature reading is a few degrees above or below the actual temperature, you can adjust it by following these instructions:

You can choose this item to customize from “METER SETUP” by pressing the INFO (▲/▼) button repeatedly.
Press the SEL/RESET button to enter the setting.

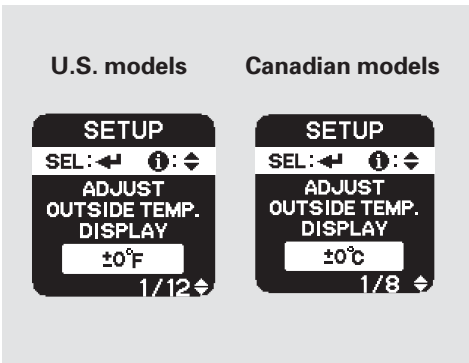

Adjust the outside temperature value by pressing the INFO (▲/▼) button repeatedly. Press the SEL/RESET button to set the desired value.

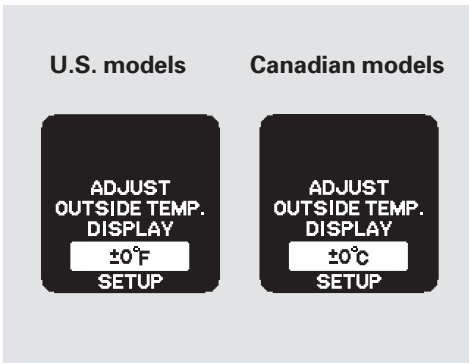

When your selection is successfully completed, the display changes as shown above, and then goes back to the customizable item screen.

If the “SETTING INCOMPLETE” message appears, go back to “ADJUST OUTSIDE TEMP. DISPLAY” and repeat the procedure again.

Trip A Reset With Refuel

To cause Trip A and average fuel for trip A to reset every time you refuel your vehicle, follow these instructions:

You can choose this item to customize from “METER SETUP” by pressing the INFO (▲/▼) button repeatedly.

Press the SEL/RESET button to see the selections.

Select ON or OFF by pressing the INFO (▲/▼) button, then enter your selection by pressing the SEL/RESET button.

When your selection is successfully completed, the display changes as shown above, and then goes back to the customizable item screen.

If the “SETTING INCOMPLETE” message appears, go back to “TRIP A RESET with REFUEL” and repeat the procedure again.

CONTINUED

Elapsed Time Reset
There are three elapsed time reset choices you can make:

IGN OFF — The elapsed time is reset when you turn the ignition switch to the LOCK (0) position.

TRIP A — The elapsed time is reset when Trip A is reset.

TRIP B — The elapsed time is reset when Trip B is reset.

You can choose this item to customize from “METER SETUP” by pressing the INFO (▲/▼) button repeatedly.

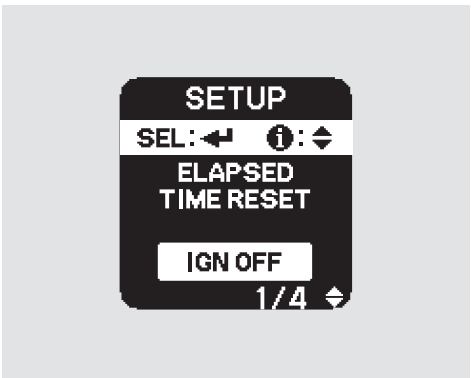

Press the SEL/RESET button to see the selections.

Select the desired setting by pressing the INFO (▲/▼) button, then enter your selection by pressing the SEL/RESET button.

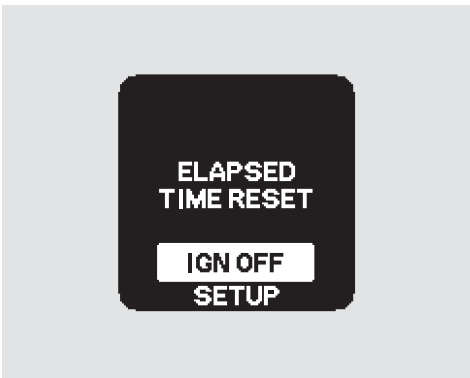

When your selection is successfully completed, the display changes as shown above, and then goes back to the customizable item screen.

If the “SETTING INCOMPLETE” message appears, go back to “ELAPSED TIME RESET” and repeat the procedure again.

Display Km/Miles

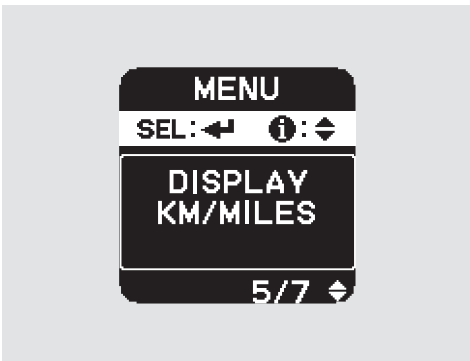

To change the displayed measurement in the trip computer and trip information and to switch between kilometers and miles, follow these instructions:

You can choose this item to customize from “METER SETUP” by pressing the INFO (▲/▼) button repeatedly.

CONTINUED

Press the SEL/RESET button to see the selections.

Select AUTO, KM, or MILES by pressing the INFO (▲/▼) button, then enter your selection by pressing the SEL/RESET button.

AUTO: When you press the km/mile change knob in the instrument panel to switch the speedometer reading between miles per hour (mph) and kilometers per hour (km/h), the displayed measurement in the trip computer and trip information, also switches to kilometers or miles depending on the selected speedometer reading.

KM: The displayed measurement in the trip computer and trip information is set to kilometers.

MILES: The displayed measurement in the trip computer and trip information is set to miles.

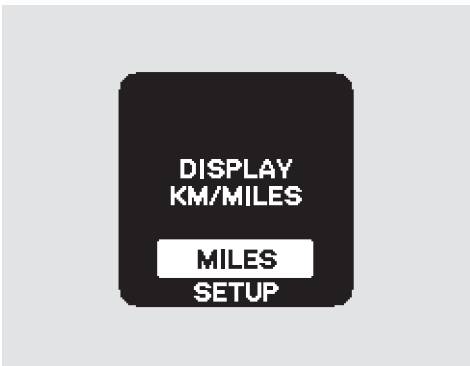

When your selection is successfully completed, the display changes as shown above, and then goes back to the customizable item screen.

If the “DISPLAY KM/MILES SETTING INCOMPLETE” message appears, go back to “DISPLAY KM/MILES” and repeat the procedure again.

Meter Color Change

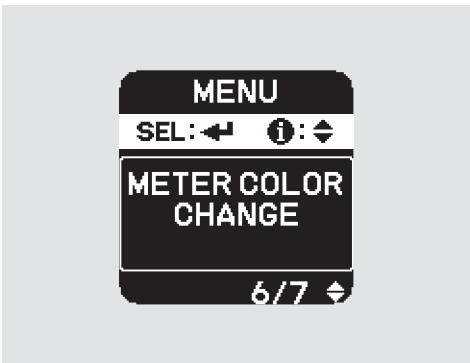

You can turn the ambient meter feature on or off (see page 72).

You can choose this item to customize from “METER SETUP” by pressing the INFO (▲/▼) button repeatedly.

Press the SEL/RESET button to see the selections.

Select ON or OFF by pressing the INFO (▲/▼) button, then enter your selection by pressing the SEL/RESET button.

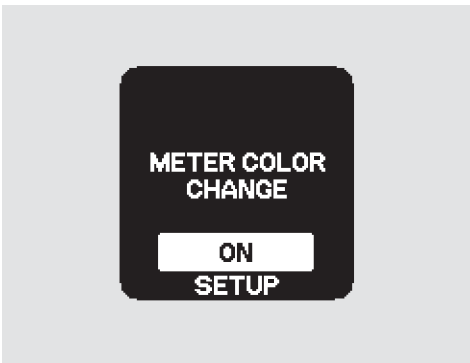

When your selection is successfully completed, the display changes as shown above, and then goes back to the customizable item screen.

If the “METER COLOR CHANGE SETTING INCOMPLETE” message appears, go back to “METER COLOR CHANGE” and repeat the procedure again.

Lighting Setup
There is one custom setting for the lighting setup:

- INTERIOR LIGHT DIMMING TIME
- AUTO LIGHT SENSITIVITY

While “LIGHTING SETUP” is shown, press the SEL/RESET button to enter the customize mode.

Each time you press the INFO (▲/▼) button, the screen changes as shown in the illustration. Press the INFO (▲/▼) button until you see the setting you want to customize, then press the SEL/RESET button to enter your selection.

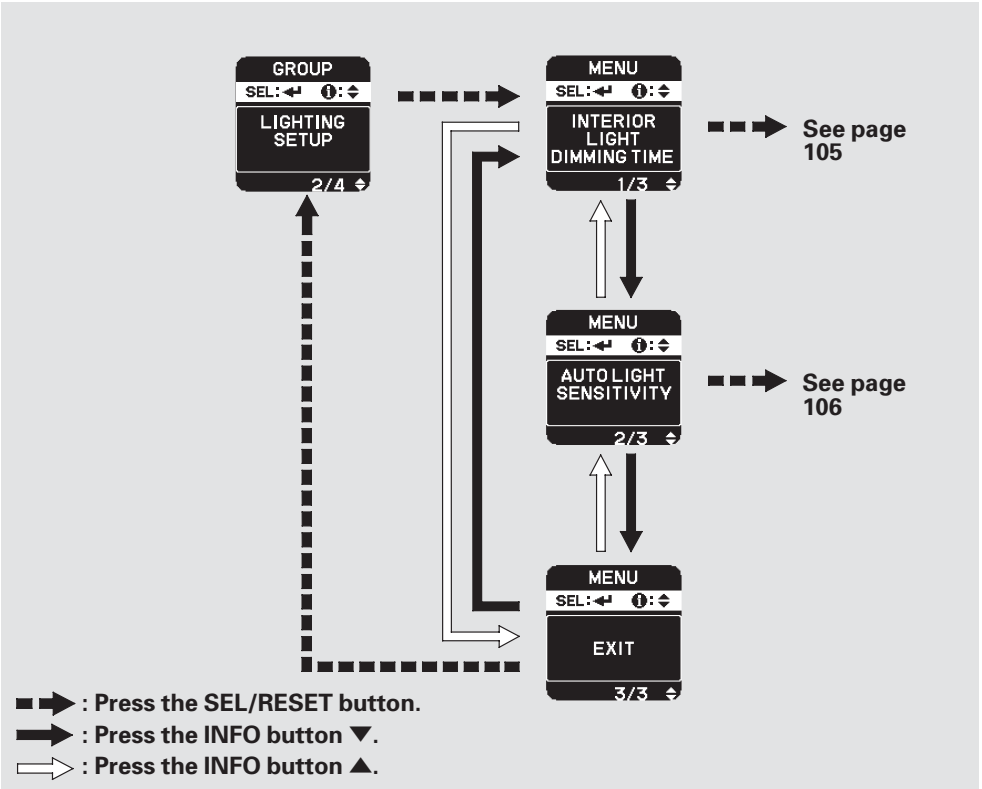

Interior Light Dimming Time

The interior lights fade out when you close all doors. To change how long the lights stay on before they fade out, follow these instructions:

You can choose this item to customize from “LIGHTING SETUP” by pressing the INFO (▲/▼) button repeatedly.

Press the SEL/RESET button to see the selections.

Select the desired setting (15sec, 30sec, or 60sec) by pressing the INFO (▲/▼) button, then enter your selection by pressing the SEL/RESET button.

When your selection is successfully completed, the display changes as shown above, and then goes back to the customizable item screen.

If the “SETTING INCOMPLETE” message appears, go back to “INTERIOR LIGHT DIMMING TIME” and repeat the procedure again.

CONTINUED

Auto Light Sensitivity
The headlights automatically come on when the headlight switch is in the AUTO position and the ambient light reaches a changeable level. You can select the auto light sensitivity from the following five levels:
MAX –
The headlights come on when it is bright.

HIGH –
The headlights come on when it is somewhat bright.

MID –
The headlights come on when it is as bright as sunset or sunrise.

LOW –
The headlights come on when it is somewhat dark.

MIN –
The headlights come on when it is dark.

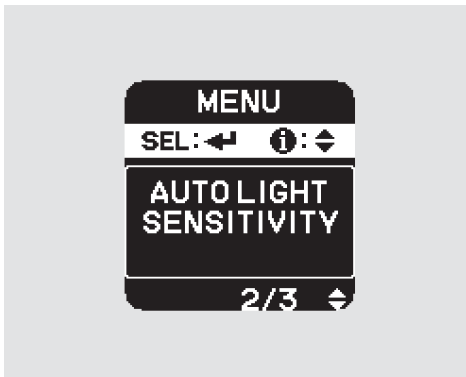

You can choose this item to customize from “LIGHTING SETUP” by pressing the INFO (▲/▼) button repeatedly.

Press the SEL/RESET button to see the selections.

Select the desired setting (MAX, HIGH, MID, LOW or MIN) by pressing the INFO (▲/▼) button, then enter your selection by pressing the SEL/RESET button.

When your selection is successfully completed, the display changes as shown above, and then goes back to the customizable item screen.

If the “SETTING INCOMPLETE” message appears, go back to “AUTO LIGHT SENSITIVITY” and repeat the procedure again.

Door Setup
Here are the five custom settings for the door setup:

- AUTO DOOR LOCK
- AUTO DOOR UNLOCK
- DOOR LOCK MODE
- KEYLESS LOCK ACKNOWLEDGMENT
- SECURITY RELOCK TIMER

While "DOOR SETUP" is shown, press the SEL/RESET button to enter the customize mode.

Each time you press the INFO (▲/▼) button, the screen changes as shown in the illustration. Press the INFO (▲/▼) button until you see the setting you want to customize, then press the SEL/RESET button to enter your selection.

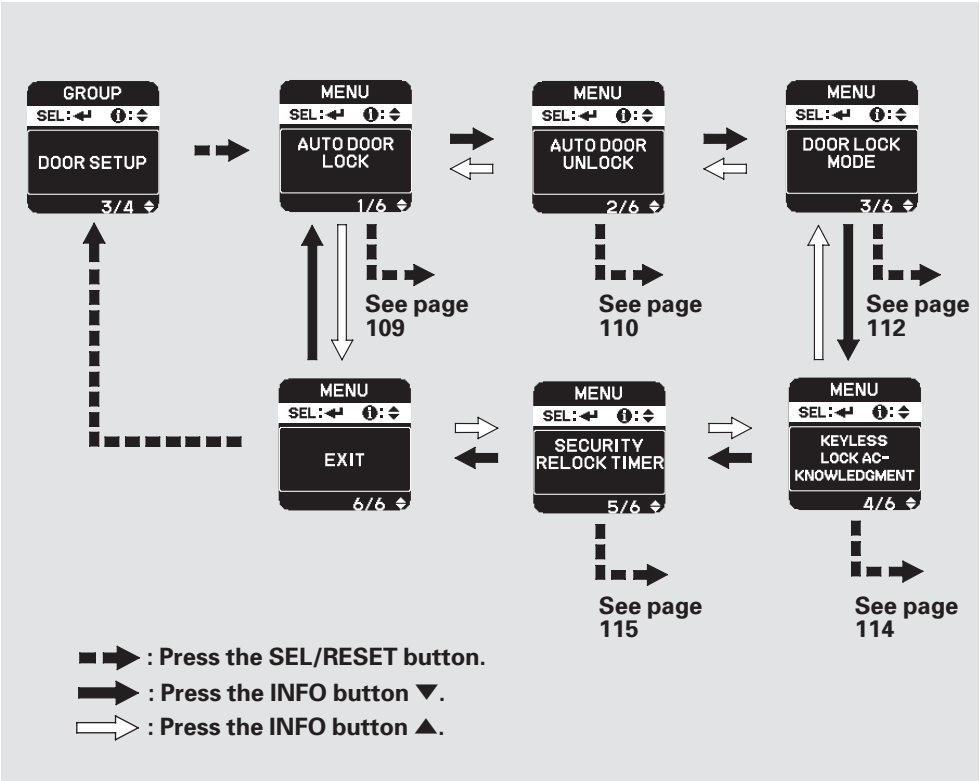

Auto Door Lock
There are three settings you can choose from:

SHIFT FROM P —
The doors lock whenever you move the shift lever out of Park.

WITH VEHICLE SPEED —
The doors lock when the vehicle speed reaches about 10 mph (about 16 km/h).

OFF —
The auto door lock mode is deactivated all the time.

You can choose this item to customize from “DOOR SETUP” by pressing the INFO (▲/▼) button repeatedly.

Press the SEL/RESET button to enter the selecting mode.

Select the desired setting by pressing the INFO (▲/▼) button, then enter your selection by pressing the SEL/RESET button.

CONTINUED

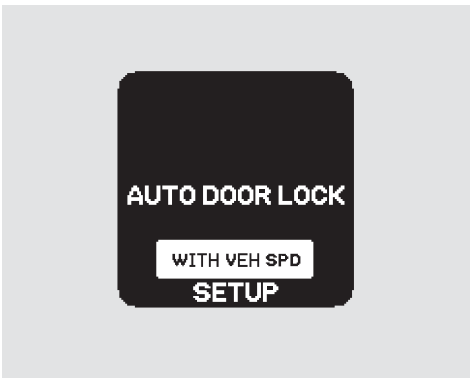

When your selection is successfully completed, the display changes as shown above, and then goes back to the customizable item screen.

If the “SETTING INCOMPLETE” message appears, go back to “AUTO DOOR LOCK” and repeat the procedure again.

Auto Door Unlock
There are five possible settings you can choose from:

DRIVER DOOR WITH SHIFT TO P — The driver’s door unlocks when you move the shift lever to Park with the brake pedal depressed.

ALL DOORS WITH SHIFT TO P — All the doors unlock when you move the shift lever to Park with the brake pedal depressed.

DRIVER DOOR WITH IGN OFF — The driver's door unlocks when you turn the ignition switch to the LOCK (0) position.

ALL DOORS WITH IGN OFF — All the doors unlock when you turn the ignition switch to the LOCK (0) position.

OFF — The auto door unlock is deactivated all the time.

You can choose this item to customize from "DOOR SETUP" by pressing the INFO (▲/▼) button repeatedly.

Press the SEL/RESET button to enter the selecting mode.

Select the desired setting by pressing the INFO (▲/▼) button.

For example, you choose "DRIVER DOOR with SHIFT to P," you will see the above display.

CONTINUED

If you choose “ALL DOORS With IGN OFF,” you will see the above display.

Press the SEL/RESET button to enter your selection.

When your selection is successfully completed, the display changes as shown above, and then goes back to the customizable item screen.

If the “SETTING INCOMPLETE” message appears, go back to “AUTO DOOR UNLOCK” and repeat the procedure again.

Door Lock Mode

To select whether the driver’s or all doors unlock when you unlock the doors with the remote transmitter or the key, follow these instructions.

You can choose this item to customize from “DOOR SETUP” by pressing the INFO (▲/▼) button repeatedly.

Press the SEL/RESET button to enter the selecting mode.

Select the desired setting by pressing the INFO (▲/▼) button, then enter your selection by pressing the SEL/RESET button.

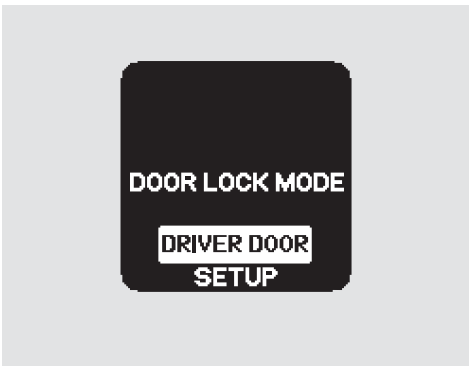

When your selection is successfully completed, the display changes as shown above, and then goes back to the customizable item screen.

If the “SETTING INCOMPLETE” message appears, go back to “DOOR LOCK MODE” and repeat the procedure again.

Keyless Lock Acknowledgment
When you push the LOCK button on the remote transmitter, some exterior lights flash, and a beeper sounds when you push the LOCK button again within 5 seconds to verify that the doors and the hatch are locked and the security system has set (see page 223). You can customize the exterior lights not to flash and the beeper not to sound.

You can choose this item to customize from “DOOR SETUP” by pressing the INFO (▲/▼) button repeatedly.

Press the SEL/RESET button to enter the selecting mode.

Select ON or OFF by pressing the INFO (▲/▼) button, then enter your selection by pressing the SEL/RESET button.

When your selection is successfully completed, the display changes as shown above, and then goes back to the customizable item screen.

If the “SETTING INCOMPLETE” message appears, go back to “KEYLESS LOCK ACKNOWLEDGMENT” and repeat the procedure again.

Security Relock Timer
If you unlock the doors with the remote transmitter, but do not open any of the doors within 30 seconds, the doors and the hatch, automatically relock, and the security system sets.

You can change this relock time from 30 seconds to 60 or 90 seconds.

You can choose this item to customize from “DOOR SETUP” by pressing the INFO (▲/▼) button repeatedly.

CONTINUED

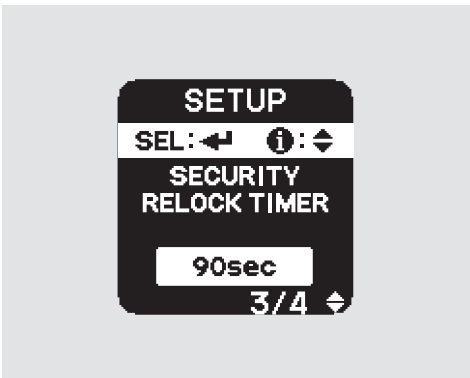

Press the SEL/RESET button to enter the selecting mode.

Select the desired setting by pressing the INFO (▲/▼) button, then enter your selection by pressing the SEL/RESET button.

When your selection is successfully completed, the display changes as shown above, and then goes back to the customizable item screen.

If the “SETTING INCOMPLETE” message appears, go back to “SECURITY RELOCK TIMER” and repeat the procedure again.

DEFAULT ALL

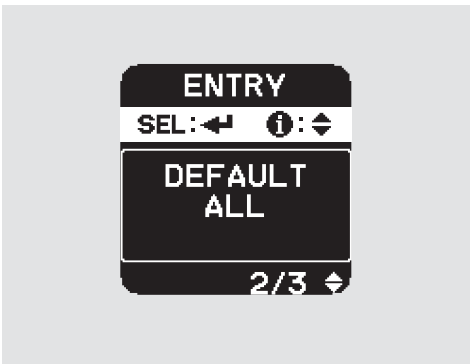

If you want to set the default settings, press the INFO (▲/▼) button to select DEFAULT ALL, then press the SEL/RESET button.

To set the default settings, press the INFO (▲/▼) button to select SET then press the SEL/RESET button.

If you want to cancel DEFAULT ALL, select CANCEL, then press the SEL/RESET button. The screen goes back to the previous display.

When DEFAULT ALL is set, you will see the above display for several seconds, then the screen returns to the default all setting display.

If the setting is not successfully completed, “FAILED” is shown for several seconds, and then the screen goes back to SETUP. Repeat the same procedure to select DEFAULT ALL.

Controls Near the Steering Wheel

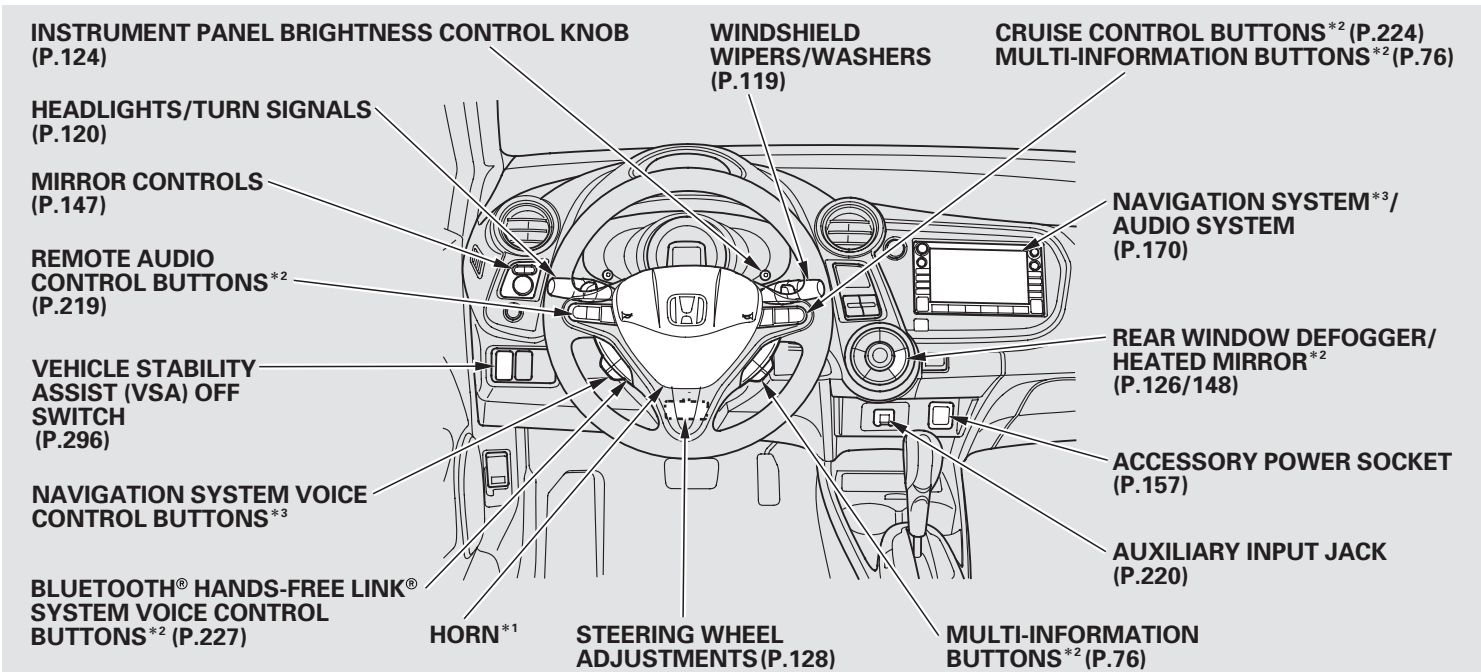

EX model with navigation system is shown.

*1 : To use the horn, press the center pad of the steering wheel.
*2 : If equipped
*3 : Only on vehicles equipped with navigation system. Refer to the navigation system manual.

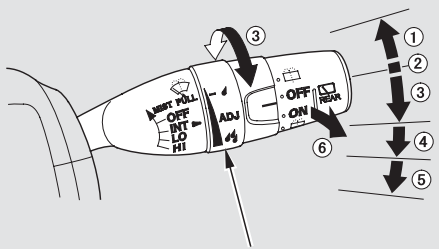

EX model is shown.

1. MIST
2. OFF
3. INT — Intermittent
4. LO — Low speed
5. HI — High speed
6. Windshield washers

Push the right lever up or down to select a position.

MIST — The wipers run at high speed until you release the lever.

OFF — The wipers are not activated.

INT — The length of the wipe interval is varied automatically according to vehicle's speed.

EX models
The length of the wiper interval is varied automatically according to the vehicle's speed.

Vary the delay by turning the adjustment ring. If you turn it to the shortest delay (position), the wipers change to low speed operation when the vehicle speed exceeds 12 mph (20 km/h).

LO — The wipers run at low speed.

HI — The wipers run at high speed.

Windshield Washer — Pull the wiper control lever toward you, and hold it. The washers spray until you release the lever. The wipers run at low speed, then complete one more sweep after you release the lever.

Rear Window Wiper and Washer

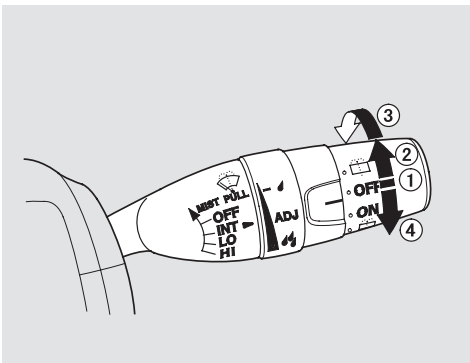

1. OFF
   When you turn the wiper switch to the “OFF” position, the wiper will return to its parked position.
2. Rotate the switch clockwise to turn the rear window wiper ON. The wiper operates every 7 seconds after completing two sweeps.
3. Hold past ON to activate the rear window wiper a few times and to spray the rear window washer.
4. Rotate the switch counterclockwise also to spray the window washer and turn the wiper on.

When you shift the transmission to the reverse position with the front windshield wiper activated, the rear wiper operates automatically even if the rear wiper switch is off.

The rear window washer uses the same fluid reservoir as the windshield washer.

Turn Signals and Headlights

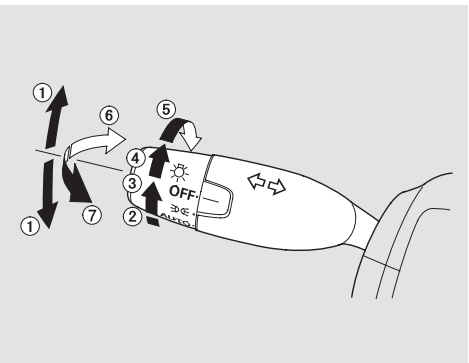

1. Turn Signal
2. OFF
3. Parking and interior lights
4. AUTO*
5. Headlights on
6. High Beams
7. Flash high beams

*: EX models

Turn Signal — Push down on the left lever to signal a left turn and up to signal a right turn. To signal a lane change, push lightly on the lever and hold it. The lever will return to the center when you release it or complete a turn.

Headlights — Turning the switch to the " " position turns on the parking lights, taillights, instrument panel lights, side-marker lights, and rear license plate lights.

Turning the switch to the " " position turns on the headlights.

When the light switch is in the " " or " " position, the lights on indicator comes on as a reminder.

This indicator stays on if you leave the lights on and turn the ignition switch to the ACCESSORY (I) or LOCK (0) position.

If you leave the lights on with the key removed from the ignition switch, you will hear a reminder chime when you open the driver's door.

High Beams — Push the left lever forward until you hear a click. The blue high beam indicator will come on (see page 69). Pull the lever back to return to the low beams.

To flash the high beams, pull the lever back lightly, then release it. The high beams will stay on as long as you hold the lever back.

On EX models
AUTO — The automatic lighting feature turns on the headlights, all other exterior lights, and the instrument panel lights when it senses low ambient light.

To turn on the automatic lighting, turn the light switch to the AUTO position. The lights will come on automatically when the outside light level becomes low (at dusk, for example). The lights on indicator comes on as a reminder. The lights and indicator turn off automatically when the system senses high ambient light.

The lights turn off automatically when you turn the ignition switch to the LOCK (0) position. To turn them on again, either turn the ignition switch to the ON (II) position, or turn the light switch to the position.

Even with the automatic lighting feature turned on, we recommend that you turn on the lights manually when driving at night or in a dense fog, or when you enter dark areas such as long tunnels or parking facilities.

To change the "AUTO LIGHT SENSITIVITY" setting, see page 106.

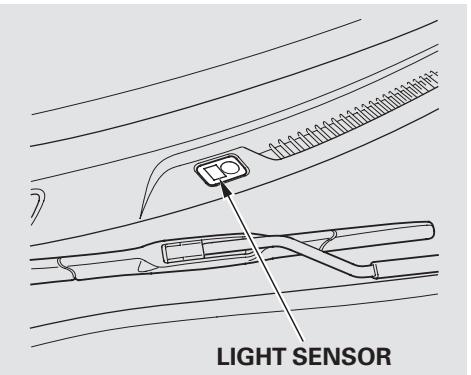

The automatic lighting feature is controlled by a sensor located on top of the dashboard. Do not cover this sensor or spill liquids on it.

Daytime Running Lights
With the headlight switch off or in the position, the high beam headlights and the high beam indicator come on with reduced brightness when you turn the ignition switch to the ON (II) position and release the parking brake. They remain on until you turn the ignition switch off, even if you set the parking brake.

The headlights revert to normal operation when you turn them on with the switch.

If you see a “CHECK DRL SYSTEM” message on the multi-information display, there is a problem with the daytime running light system. Take your vehicle to a dealer to have it checked.

Instrument Panel Brightness

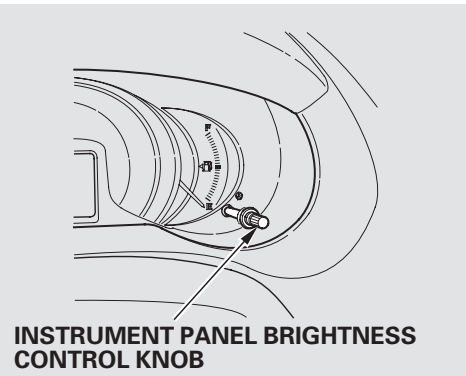

The knob on the instrument panel controls the brightness of the instrument panel lights. Turn the knob to adjust the brightness with the ignition switch in the ON (II) position and the parking lights on.

When you turn the knob, the multi-information display changes to vertical bars that show you the current level.

You will hear a tone when you reach the maximum or minimum brightness. The brightness level goes out about 5 seconds after you stop adjusting.

To reduce glare at night, the instrument panel illumination dims when you turn the light switch to the ≣D or ≣DOE position. Turning the knob to the right until you hear a tone will cancel the reduced brightness.

The instrument panel will illuminate with reduced brightness when you unlock and open the driver's door. The brightness will increase slightly when you insert the key in the ignition switch, then go to normal brightness when you turn the ignition switch to the ON (II) position.

If you do not insert the key in the ignition switch after opening the driver's door, the illumination turns off about 30 seconds after you close the door.

If you insert the key but do not turn the ignition switch to the ON (II) position, the illumination turns off in about 10 seconds.

Hazard Warning Button

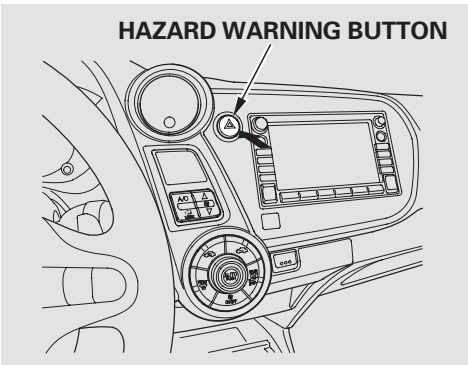

Push the button next to the audio system to turn on the hazard warning lights (four-way flashers). This causes all four outside turn signal lights and both turn signal indicators in the instrument panel to flash. Use the hazard warning lights if you need to park in a dangerous area near heavy traffic, or if your vehicle is disabled.

Rear Window Defogger

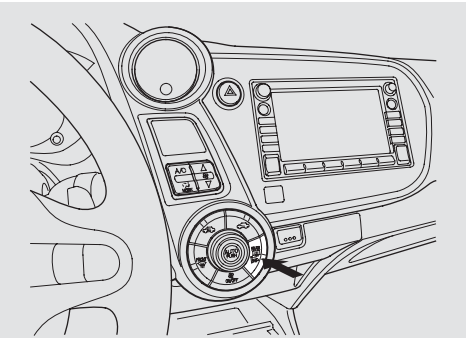

U.S. EX model is shown.

The rear window defogger will clear fog, frost, and thin ice from the windows. Push the defogger button to turn it on and off. The indicator in the button comes on to show the defogger is on. It also shuts off when you turn off the ignition switch. You have to turn the defogger on again when you restart the vehicle.

The defogger will shut itself off within about 10 to 30 minutes according to the outside temperature (over 32°F, 0°C).

Make sure all rear windows are clear and you have good visibility before starting to drive.

The defogger and antenna wires on the inside of all rear windows can be accidentally damaged. When cleaning the glass, always wipe side-to-side.

U.S. EX models and all Canadian models
Pushing this button also turns the mirror heaters on or off. For more information, see page 148 .

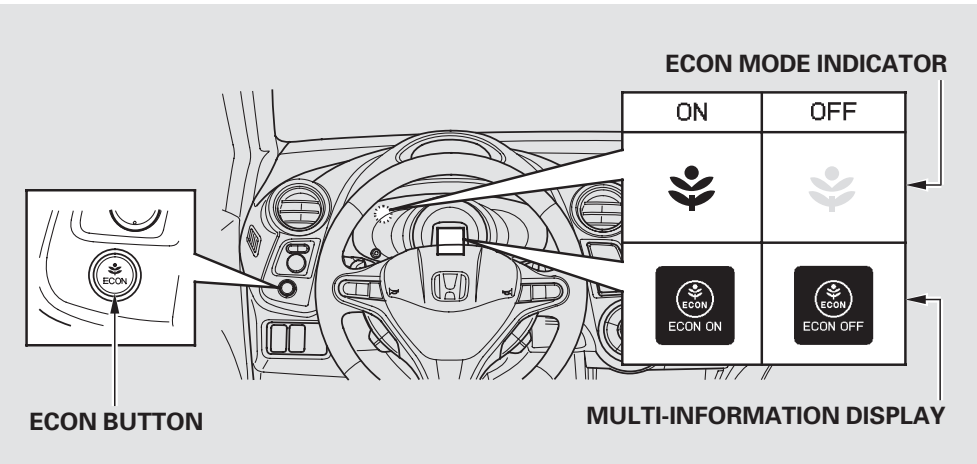

The ECON button turns the ECON mode on and off. The ECON mode helps you improve your fuel economy by modifying some vehicle functions. When the ECON mode is on:

- Engine performance will be different
- The climate control system will have greater temperature fluctuations

In addition, when the ECON mode is on, you may get more Eco Assist points (see page 266).

Press the ECON button to activate the ECON mode. ECON ON will be displayed on the multi-information display and the ECON mode indicator will illuminate in the instrument panel. Press the ECON button again to turn it off. ECON OFF will appear on the multi-information display.

When you turn off and then restart the engine, the ECON mode setting remains the same as previously set.

Make any steering wheel adjustments before you start driving.

⚠ WARNING

Adjusting the steering wheel position while driving may cause you to lose control of the vehicle and be seriously injured in a crash.

Adjust the steering wheel only when the vehicle is stopped.

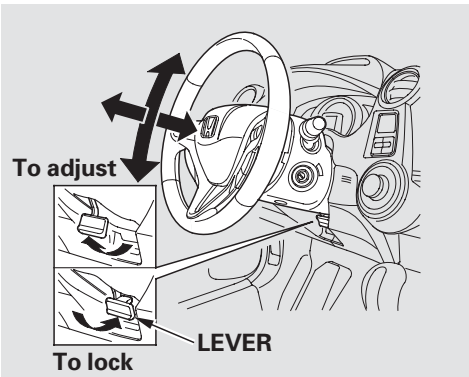

1. Pull the lever under the steering column toward you until it stops.

2. Move the steering wheel so it points toward your chest, not toward your face. Make sure you can see the instrument panel gauges and indicators.

3. Push the lever forward fully to lock the steering wheel in position.

   Make sure the lever is positioned securely at the bottom of the steering column as shown.

4. Make sure you have securely locked the steering wheel in place by trying to move it up, down, in, and out.

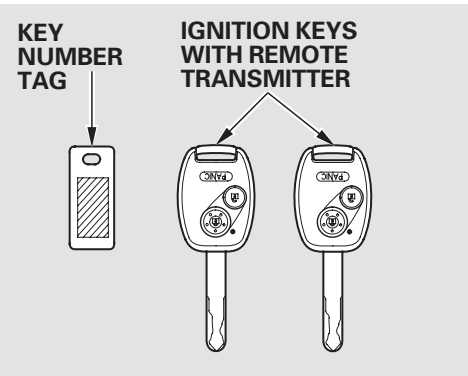

Two ignition keys come with your vehicle. You should keep one of them in a safe place, away from the vehicle, as a spare.

They fit all the locks on your vehicle.

You should have received a key number tag with your keys. You will need this number if you ever have to get a lost key replaced. Use only Honda-approved key blanks.

These keys contain electronic circuits that are activated by the immobilizer system. They will not work to start the engine if the circuits are damaged.

- Protect the keys from direct sunlight, high temperature, and high humidity.
- Do not drop the keys or set heavy objects on them.
- Keep the keys away from liquids. If they get wet, dry them immediately with a soft cloth.

The immobilizer system protects your vehicle from theft. If an improperly coded key (or other device) is used, the engine's fuel system is disabled.

When you turn the ignition switch to the ON (II) position, the immobilizer system indicator should come on briefly, then go off. If the indicator starts to blink, it means the system does not recognize the coding of the key. Turn the ignition switch to the LOCK (0) position, remove the key, reinsert it, and turn the ignition switch to the ON (II) position again.

The system may not recognize your key's coding if another immobilizer key or other metal object (i.e. key chain) is near the ignition switch when you insert the key.

If the system repeatedly does not recognize the coding of your key, contact your dealer.

Do not attempt to alter this system or add other devices to it. Electrical problems could result that may make your vehicle inoperable.

If you lose your key and you cannot start the engine, contact your dealer.

NOTICE

Always take the ignition key with you whenever you leave the vehicle alone.

As required by the FCC:
This device complies with Part 15 of the FCC rules. Operation is subject to the following two conditions: (1) This device may not cause harmful interference, and (2) this device must accept any interference received, including interference that may cause undesired operation.

Changes or modifications not expressly approved by the party responsible for compliance could void the user's authority to operate the equipment.

This device complies with Industry Canada Standard RSS-210.
Operation is subject to the following two conditions: (1) this device may not cause interference, and (2) this device must accept any interference that may cause undesired operation of the device.

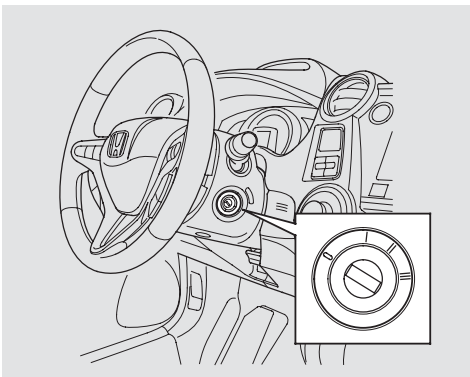

The ignition switch has four positions: LOCK (0), ACCESSORY (I), ON (II), and START (III).

LOCK (0) — You can insert or remove the key only in this position. To turn the key, the shift lever must be in Park, and you must push the key in slightly.

If the front wheels are turned, the anti-theft lock may make it difficult to turn the key. Firmly turn the steering wheel to the left or right as you turn the key.

ACCESSORY (I) — You can operate the audio system and the accessory power sockets in this position.

If you leave the key in the ignition switch in the ACCESSORY (I) position and open the driver's door, you will see a "RETURN IGNITION SWITCH TO LOCK (0) POSITION" message on the multi-information display and hear a reminder beeper.

If you turn the ignition key to the ACCESSORY (I) position with the driver's door closed, you will see an "ACCESSORY (I) POSITION" message on the multi-information display to inform you of the key position.

CONTINUED

ON (II) — This is the normal key position when driving. Several of the indicators on the instrument panel come on as a test when you turn the ignition switch from the ACCESSORY (I) to the ON (II) position.

START (III) — Use this position only to start the engine. The switch returns to the ON (II) position when you let go of the key.

You will hear a reminder beeper if you leave the key in the ignition switch in the LOCK (0) or the ACCESSORY (I) position and open the driver's door. Remove the key to turn off the beeper.

You will also see a "REMOVE KEY" message on the multi-information display.

The shift lever must be in Park before you can remove the key from the ignition switch.

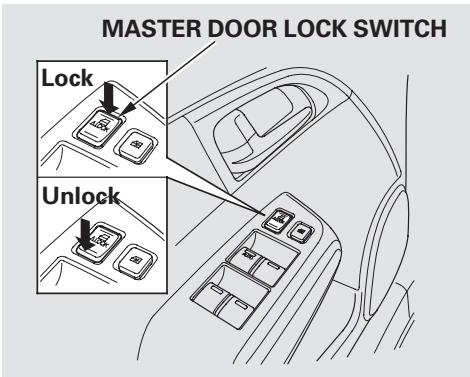

To lock all doors and the hatch, push the front of the master door lock switch on the driver's door, pull the lock tab rearward on the driver's door, or use the key on the outside lock on the driver's door.

Pushing the rear of the master door lock switch will unlock all doors and the hatch. Pushing forward the lock tab on the driver's door unlocks only that door.

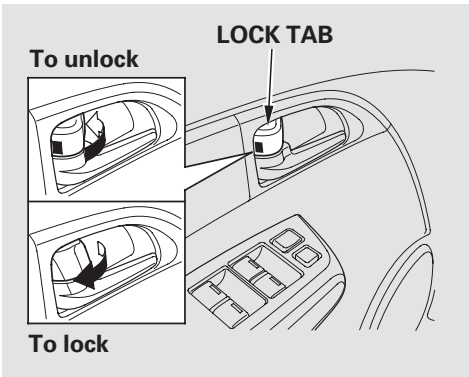

The lock tab on each passenger's door locks and unlocks that door.

When the door is unlocked, you can see the red indicator on the lock tab above the inner door handle.

All doors and the hatch can be locked from the outside by using the key in the driver's door. To unlock only the driver's door, insert the key, turn it clockwise, and release it. The remaining doors and the hatch unlock when you turn the key a second time within a few seconds.

You can customize the door lock/ unlock settings (see page 108).

CONTINUED

To lock any passenger's door when getting out of the vehicle, pull the lock tab rearward and close the door. To lock the driver's door, remove the key from the ignition switch, pull the lock tab rearward or push the front of the master switch, then close the door.

Default setting
When the vehicle speed reaches about 10 mph (U.S.)/15 km/h (Canada) or more, all the doors and the hatch lock automatically.

When you shift to P after driving, the driver's door unlocks.

Lockout Prevention
If you forget and leave the key in the ignition switch, lockout prevention will not allow you to lock the driver's door. With any door or the hatch open and the key in the ignition switch, locking with master door lock switch is disabled. If the driver's door is closed, the lock tab on the driver's door is not disabled. Pulling the driver's lock tab rearward will lock all doors and the hatch. If you try to lock an open driver's door by pulling the lock tab rearward, the driver's door lock tab pops out and unlocks the driver's door.

Childproof Door Locks

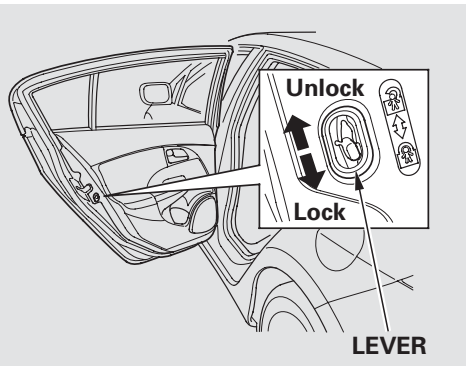

The childproof door locks are designed to prevent children seated in the rear from accidentally opening the rear doors. Each rear door has a lock lever near the edge. With the lever in the LOCK position (lever is down), the door cannot be opened from the inside regardless of the position of the lock tab. To open the door, push the lock tab forward and use the outside door handle.

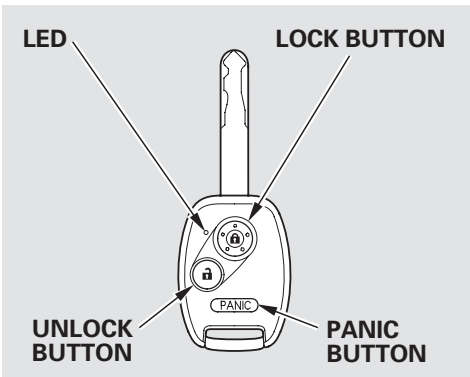

LOCK — Press this button once to lock all doors and the hatch. Some exterior lights will flash once. When you press LOCK twice within 5 seconds, the horn will sounds to verify that the doors are locked. You cannot lock the doors if any door or the hatch is not fully closed or if the key is in the ignition switch.

On LX and EX models
If you press the LOCK button twice within 5 seconds, you will hear a horn to verify that the security system has set.

UNLOCK — Press this button once to unlock the driver's door (or all the doors and the hatch depending on the door lock setting). Press it twice to unlock the remaining doors and the hatch. Some exterior lights will flash twice when you press the button the first time.

If you do not open any door or the hatch within 30 seconds, they will automatically relock, and the security system (if equipped) will reset.

The ceiling light and the door activated spotlights come on when you press the UNLOCK button if the lights are in the door activated position. If you do not open any door or the hatch within 30 seconds (or whatever setting of the interior light dimming time is set to), the light(s) will fade out. If you relock the doors and the hatch with the remote transmitter before 30 seconds have elapsed, the light(s) will go off immediately.

The keyless lock acknowledgment beep and flashing of the lights can be deactivated (see page 114).

To change the lock/unlock setting and the relock timer setting, refer to the customized settings on page 108 .

CONTINUED

PANIC — Press and hold this button for about 1 second to attract attention; the horn will sound, and the exterior lights will flash for about 30 seconds. To cancel panic mode, press any other button on the remote transmitter, or turn the ignition switch to the ON (II) position. Panic mode does not work when the key is in the ignition switch.

Remote Transmitter Care

- Avoid dropping or throwing the transmitter.
- Protect the transmitter from extreme temperatures.
- Do not immerse the transmitter in any liquid.
- If you lose a transmitter, the replacement needs to be reprogrammed by your dealer.

Replacing the Transmitter Battery

If it takes several pushes on the button to lock or unlock the doors, replace the battery as soon as possible.

Battery type: CR1616

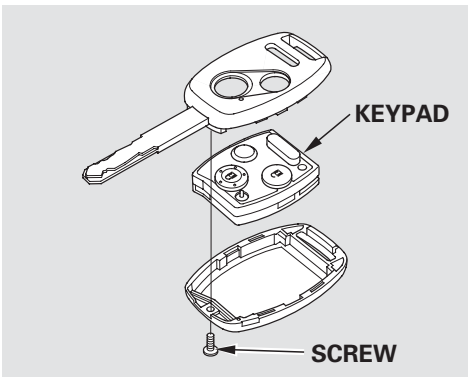

To replace the battery:

1. Remove the screw at the base of the transmitter with a small Phillips-head screwdriver.

NOTE: Be careful when removing this screw as the head of the screw can strip out.

2. Separate the keypad from the transmitter by pushing any button from outside.

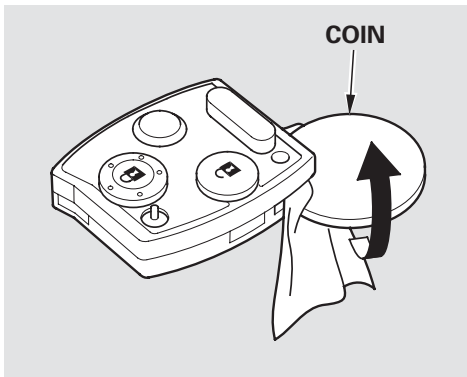

3. Place a cloth on the edge of the keypad to prevent scratches, and remove the upper half by carefully prying on the edge with a coin.

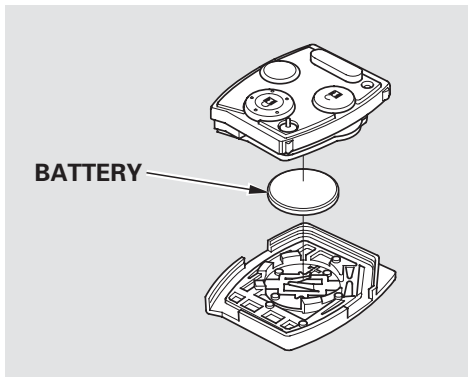

4. Remove the old battery and note the polarity. Make sure the polarity of the new battery is the same (+ side facing down), then insert it in the keypad.

5. Snap the two halves of the keypad, then install the parts in reverse order.

CONTINUED

An improperly disposed of battery can hurt the environment.
Always confirm local regulations for battery disposal.

As required by the FCC:
This device complies with Part 15 of the FCC rules. Operation is subject to the following two conditions: (1) This device may not cause harmful interference, and (2) this device must accept any interference received, including interference that may cause undesired operation.

Changes or modifications not expressly approved by the party responsible for compliance could void the user's authority to operate the equipment.

This device complies with Industry Canada Standard RSS-210.
Operation is subject to the following two conditions: (1) this device may not cause interference, and (2) this device must accept any interference that may cause undesired operation of the device.

The hatch will lock or unlock when you lock/unlock the driver's door with the key, the remote transmitter, the master door lock switch, or the lock tab on the driver's door.

To unlock the hatch, turn the key clockwise twice, push the rear of the master door lock switch, or push UNLOCK twice on the remote transmitter.

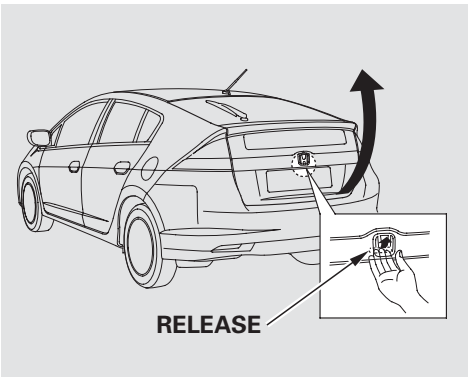

To open the hatch, push the release, and lift up. To close the hatch, use the handle to lower it, then press down on the back edge.

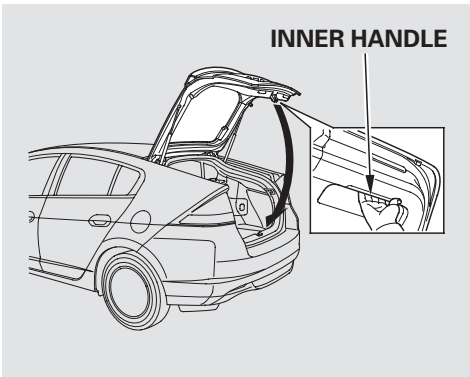

Keep the hatch closed at all times while driving to avoid damaging the hatch and to prevent exhaust gas from getting into the interior. See **Carbon Monoxide Hazard** on page 56.

Unlocking the Hatch

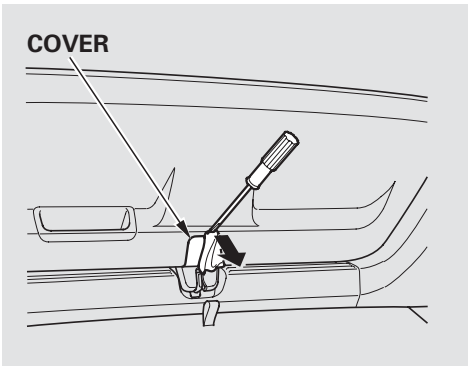

If the power door lock system cannot unlock the hatch, unlock it manually.

Place a cloth on the top side of the cover to prevent scratches, then use a small flat-tip screwdriver to remove the cover on the back of the hatch.

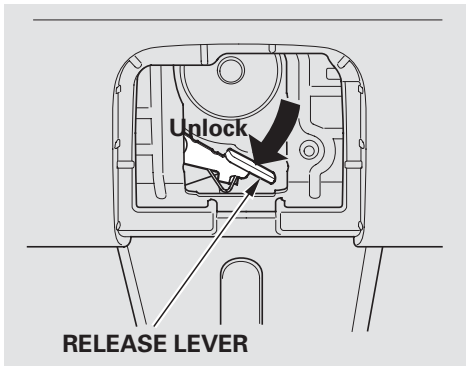

Push the release lever to the lower left as shown, and push the hatch to open it.

If you need to unlock the hatch manually, it means there is a problem with the hatch. Have the vehicle checked by your dealer.

Front Seat Adjustments

See pages 14 — 15 for important safety information and warnings about how to properly position seats and seat-backs.
Make all adjustments before you start driving.

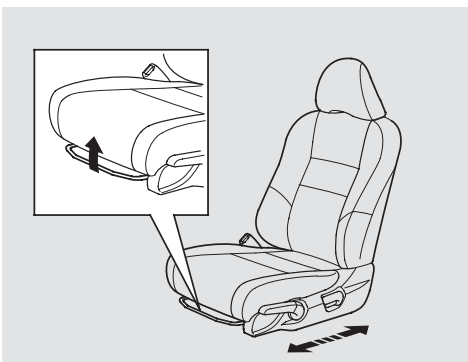

To adjust the seat forward or backward, pull up on the bar under the seat cushion's front edge. Move the seat to the desired position, and release the bar. Try to move the seat to make sure it is locked in position.

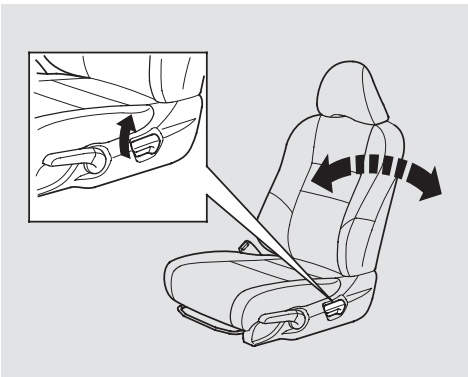

To change the seat-back angle of the front seat, pull up the lever on the outside of the seat bottom.

Once a seat is adjusted correctly, rock it back and forth to make sure it is locked in position.

Driver's Seat Height Adjustment

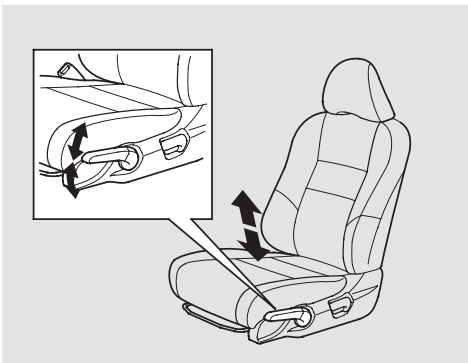

The height of your driver's seat is adjustable. To raise the seat, repeatedly pull up the lever on the outside of the seat cushion. To lower the seat, push the lever down repeatedly.

Head Restraints

See page 16 for important safety information and a warning about improperly positioning head restraints.

Your vehicle is equipped with head restraints in all seating positions to help protect you and your passengers from the likelihood of whiplash and other injuries.

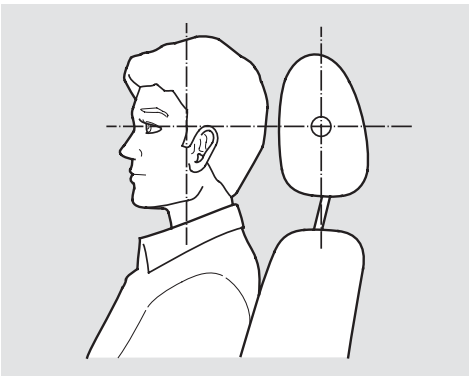

They are most effective when you adjust them so the center of the back of the occupant's head rests against the center of the restraint.

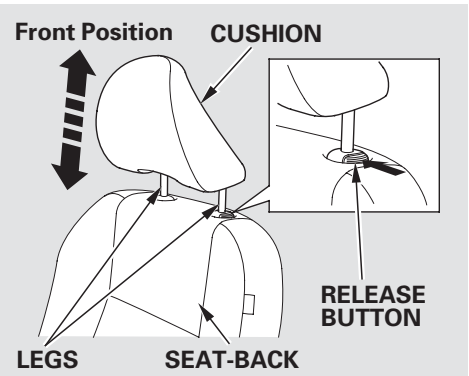

Adjusting the Head Restraint

The front and rear outer head restraints adjust for height. You need both hands to adjust the restraint. Do not attempt to adjust it while driving. To raise it, pull upward. To lower the restraint, push the release button and push the restraint down.

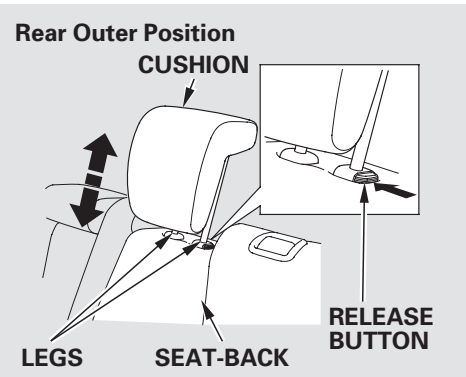

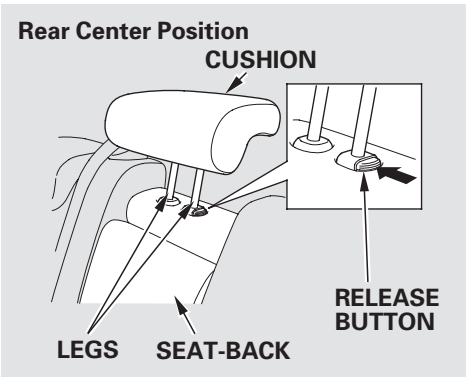

When a passenger is seated in the rear center seating position, the center head restraint should be adjusted up or down, to match the passenger's height.

Removing the Head Restraint

To remove a head restraint for cleaning or repair, pull it up as far as it will go. Push the release button, then pull the restraint out of the seat-back.

For Rear Seat Head Restraints

The seat-back must be folded forward (see page 145) to get ceiling clearance for removal of the head restraints.

CONTINUED

⚠ WARNING

Failure to reinstall, or correctly reinstall, the head restraints can result in severe injury during a crash.

Always replace the head restraints before driving.

When reinstalling a head restraint, put the legs back in place. Then adjust it to the appropriate height while pressing the release button.

Make sure the head restraint locks in position when you reinstall it.

Active Head Restraints

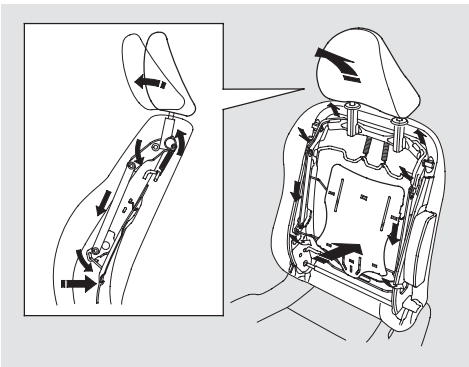

The driver's and front passenger's seats have active head restraints. If the vehicle is struck severely from the rear, the occupant properly secured with the seat belt will be pushed against the seat-back and the head restraint will automatically move forward.

This reduces the distance between the restraint and the occupant's head. It also helps protect the occupants against the likelihood of whiplash and injuries to the neck and upper spine.

After a collision, the activated restraint should return to its normal position.

If the restraints do not return to their normal position, or in the event of a severe collision, have the vehicle inspected by a Honda dealer.

For a head restraint system to work properly:

- Do not hang any items on the head restraints, or from the restraint legs.
- Do not place any object between an occupant and the seat-back.
- Install each restraint in its proper location.
- Only use genuine Honda replacement head restraints.

Folding the Rear Seats Down
The rear seat-backs can be folded down for more cargo room.

Each side folds down separately, so you can still carry one or two passengers in the rear seat.

Remove any items from the seat before folding down the seat-back, and make sure there are no items on the floor before folding down the seats.

1. Lower the rear head restraints to their lowest positions. If you fold down the right side seat-back, also adjust the rear center head restraint to its lowest position.

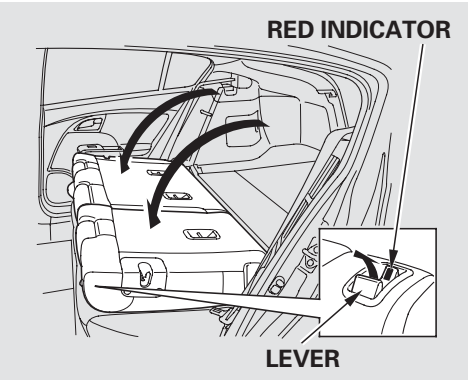

2. Unlock the seat-back by pulling up the release lever on the outer side of each rear seat-back.
3. Fold the seat-back forward.

   Do not put any heavy items on the seat-back when it is folded down.

CONTINUED

Reverse this procedure to return the seat-back to the upright position. Pull on the seat-back to make sure it is latched. If the seat-back is not latched fully, the seat belt will not work properly and you will see the red indicator behind the release lever as shown on the previous page.

Do not put any heavy items on the seat-back when it is folded down.

Make sure the seat-back and seat cushion are locked securely and all rear shoulder belts are positioned in front of the rear seat-backs.

Make sure all items in the cargo area are secured. Loose items can fly forward and cause injury if you have to brake hard (See **Carrying Cargo** on page 258).

Armrest

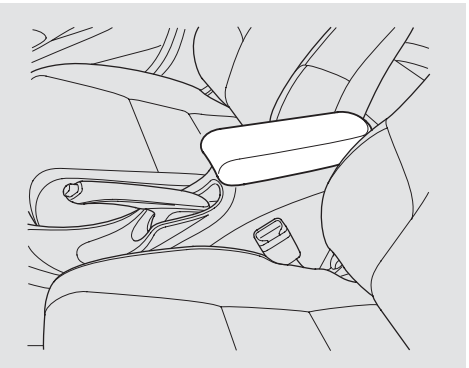

U.S. LX and EX models
The lid of the console compartment can be used as an armrest.

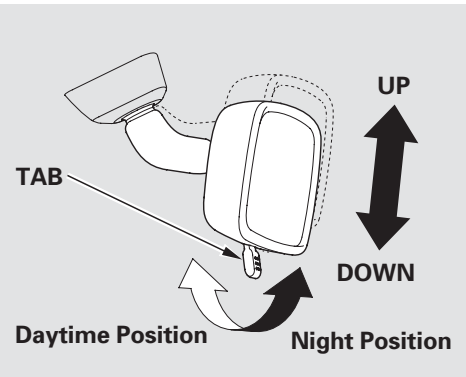

Keep the inside and outside mirrors clean and adjusted for best visibility. Be sure to adjust the mirrors before you start driving.

The inside mirror has day and night positions. The night position reduces glare from headlights behind you. Flip the tab on the bottom edge of the mirror to select the day or night position.

Adjusting the Power Mirrors

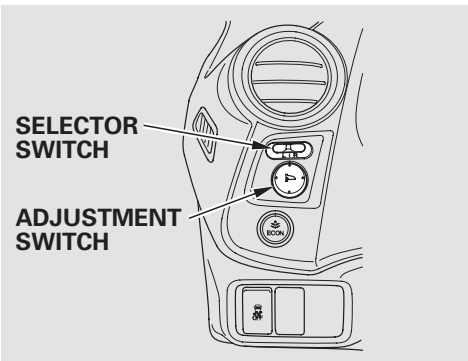

1. Turn the ignition switch to the ON (II) position.

2. Move the selector switch to L (driver's side) or R (passenger's side).

3. Push the appropriate edge of the adjustment switch to move the mirror right, left, up, or down.

4. When you finish, move the selector switch to the center (off) position. This turns the adjustment switch off to keep your settings.

Power Mirror Heaters

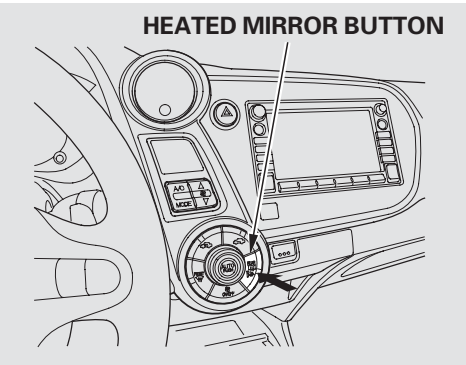

On U.S. EX models and all Canadian models

The outside mirrors are heated to remove fog and frost. With the ignition switch in the ON (II) position, turn on the heaters by pressing the rear window defogger button. The indicator in the button comes on as a reminder. Press the button again to turn the heaters and the defogger off.

This heated mirror function has a timer (see page 126).

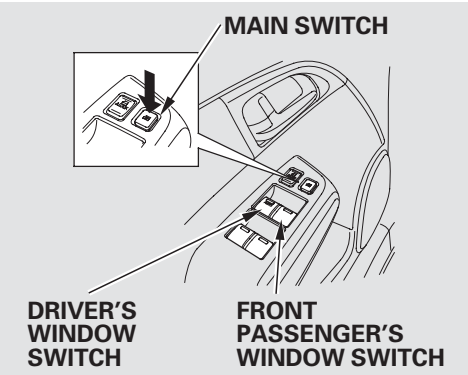

Turn the ignition switch to the ON (II) position to raise or lower any window. To open a window, push the switch down and hold it. Release the switch when you want the window to stop. Pull back on the switch and hold it to close the window.

⚠ WARNING

Closing a power window on someone's hands or fingers can cause serious injury.

Make sure your passengers are away from the windows before closing them.

AUTO — To open or close the driver's window, push or pull the window switch firmly down or up to the second detent, and release it. The window will automatically go down or up all the way. To stop the window, pull or push the window switch briefly.

CONTINUED

When you push the main switch in, the indicator comes on and the passengers' windows cannot be raised or lowered. Use the main switch when you have children in the vehicle so they do not injure themselves by operating the windows unintentionally. To cancel this feature, push on the switch again. The switch will pop out.

The windows and the main switch feature will operate for up to 10 minutes after you turn off the ignition switch. Opening either front door cancels this function.

AUTO REVERSE — If the driver's window senses any obstacle while it is closing automatically, it will reverse direction, and then stop. To close the window, remove the obstacle, then use the window switch again.

Auto reverse stops sensing when the window is almost closed. You should always check that all passengers and objects are away from the window before closing it.

NOTE: The driver's window auto reverse function is disabled when you continuously pull up the switch.

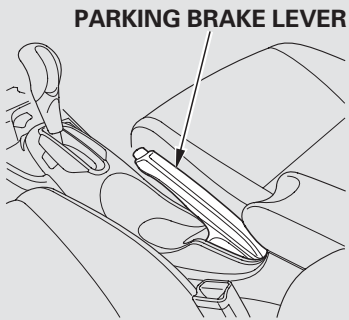

EX model is shown.

To apply the parking brake, pull the lever up fully. To release it, pull up slightly, push the button, and lower the lever. The parking brake indicator on the instrument panel should go out when the parking brake is fully released (see page 63).

If you drive without releasing the parking brake, a beeper will sound, and you will also see a “RELEASE PARKING BRAKE” message on the multi-information display.

NOTICE

Driving the vehicle with the parking brake applied can damage the rear brakes and hubs. A beeper will sound if the vehicle is put into gear with the parking brake on.

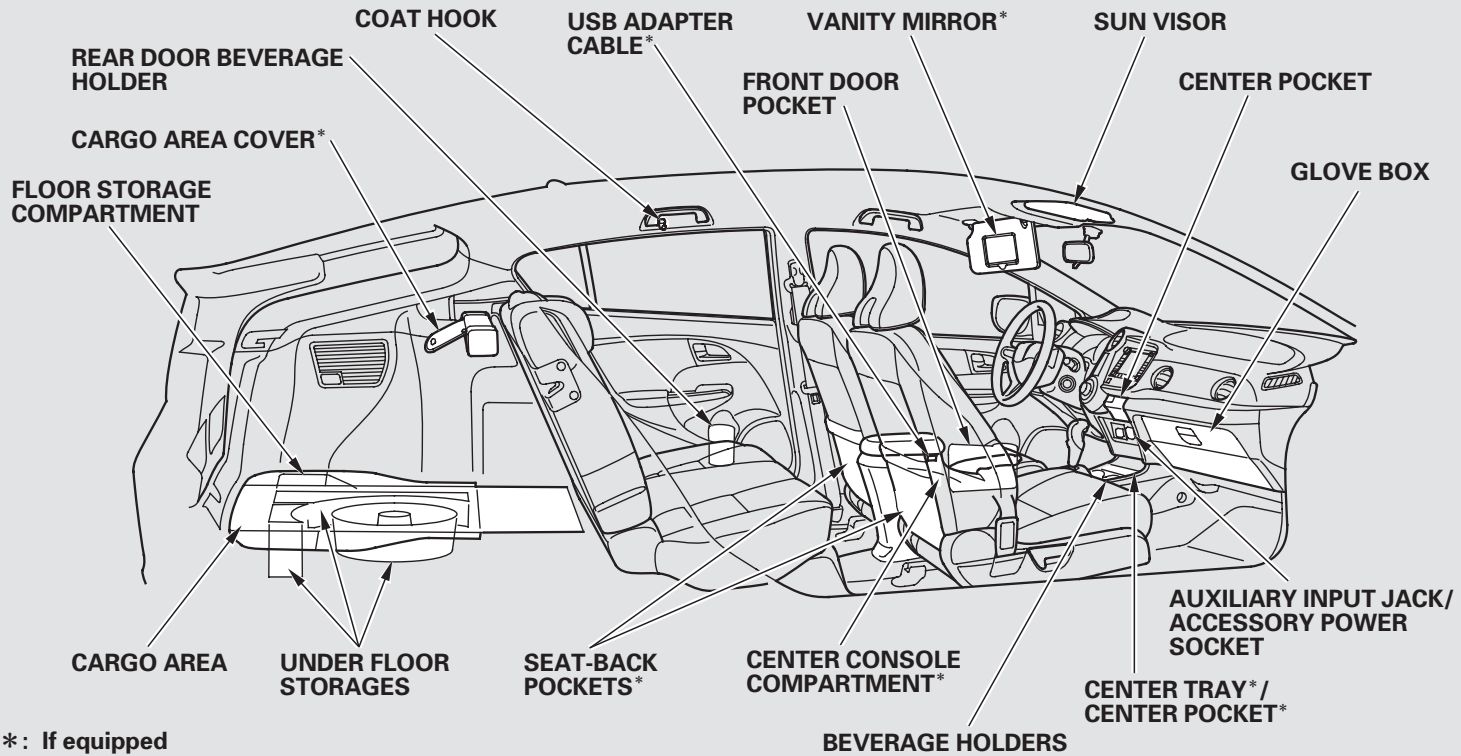

*: If equipped

EX model with navigation system is shown.

Cargo Area Cover

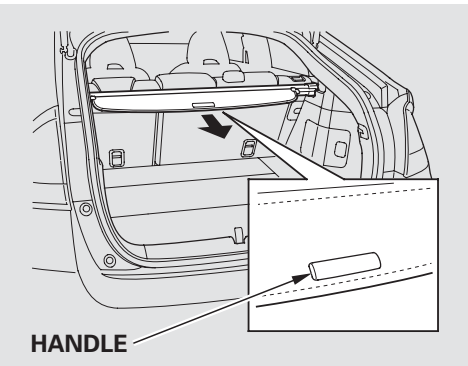

On Canadian EX model only
You can use the cargo area cover to conceal your parcels and protect them from direct sunlight.

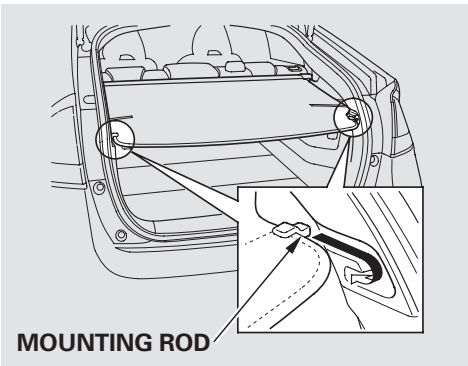

To extend the cargo area cover, pull out the cover from the housing by pulling the handle on the cover's leading edge, then clip the mounting rods in the slots at both sides of the hatch opening.

To retract the cover, slip the rods out of the hooks and guide the cover so it rolls back fully into its housing.

Do not store parcels on the cargo area cover. The cover may break if weight is placed on it.

CONTINUED

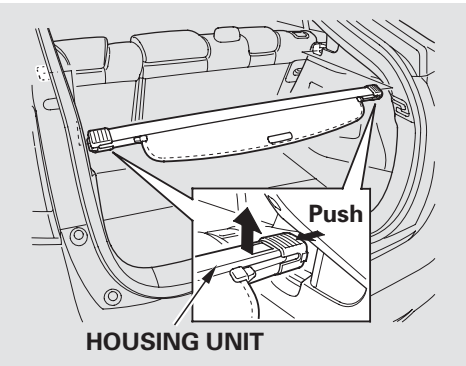

The cargo area cover housing unit can be removed to give you more cargo space.

Release each side of the housing unit by pushing one end of the unit toward the other end and lifting it upward.

To reinstall the cargo area cover housing unit, place one end of the unit in the holder on the side panel, then push it into the side panel slightly and insert the other end into its holder.

Make sure the housing unit is securely placed so it will not come loose while you are driving.

Storing the Cargo Area Cover

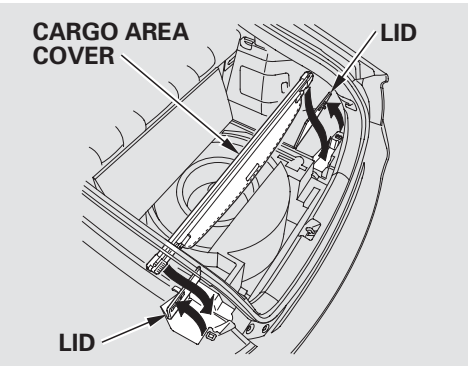

You can store the cargo area cover under the cargo area floor.

1. Open the cargo floor lid.

2. Open the cargo area cover holder lids located on both sides of the cargo area floor.

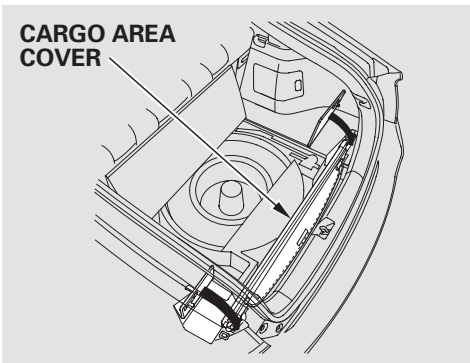

3. Store the cover in its holders as shown in the illustration above.

4. Reinstall the cargo floor lid.

Under Floor Storages

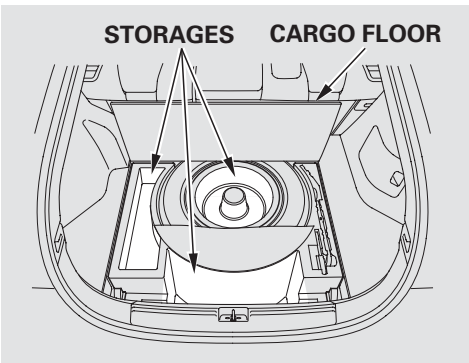

To open the cargo floor, fold the cargo floor forward.

Floor Storage Compartments

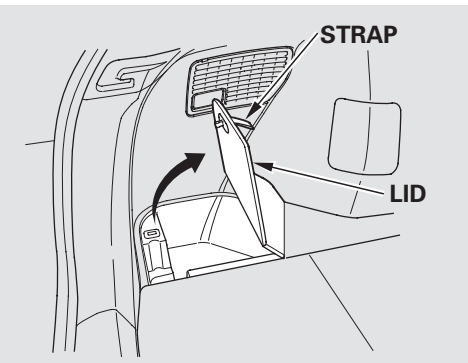

To use the storage compartment located on the left side of the cargo area floor, hold the strap and raise the lid.

Close the lid by pressing until it latches.

Beverage Holders

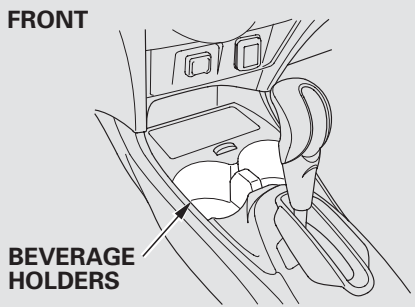

EX model

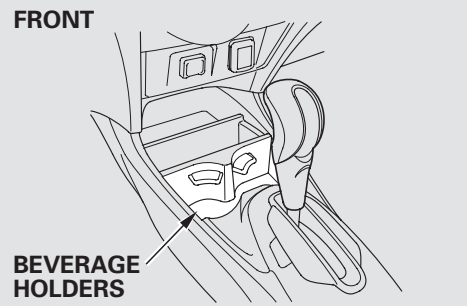

Insight model and LX model

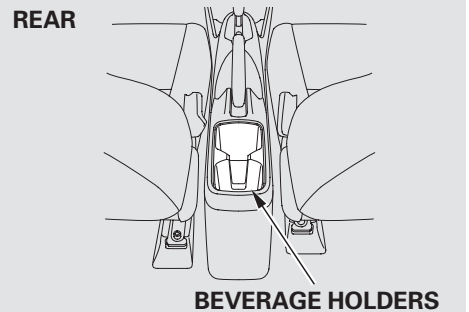

Insight model and Canadian LX model

Be careful when you are using the beverage holders. A spilled liquid that is very hot can scald you or your passengers. Liquid can also spill from the front and rear door pocket beverage holders when you open or close the doors. Use only resealable containers in the door pockets.

Spilled liquids can damage the upholstery, carpeting, and electrical components in the interior.

Accessory Power Socket

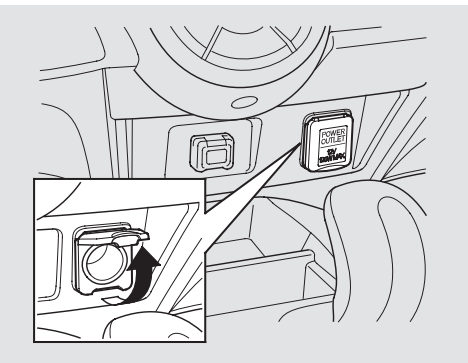

Your vehicle has an accessory power socket in the front console panel.

To use an accessory power socket, the ignition switch must be in the ACCESSORY (I) or ON (II) position.

This socket is intended to supply power for 12 volt DC accessories that are rated 120 watts or less (10 amps).

It will not power an automotive type cigarette lighter element.

Make sure to put the socket cover back in place to prevent any small foreign objects from getting into the socket.

Console Compartment

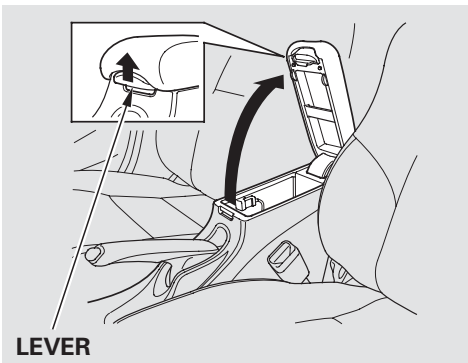

On EX and U.S. LX models
To open the console compartment, pull up on the lever and lift the armrest.

To close, lower the armrest, and push it down until it latches.

Glove Box

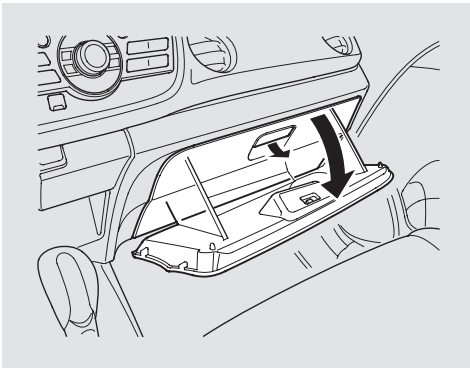

Open the glove box by pulling the handle to the left. Close it with a firm push.

On EX models only
The glove box light comes on when the parking lights are on.

⚠ WARNING

An open glove box can cause serious injury to your passenger in a crash, even if the passenger is wearing the seat belt.

Always keep the glove box closed while driving.

Center Tray

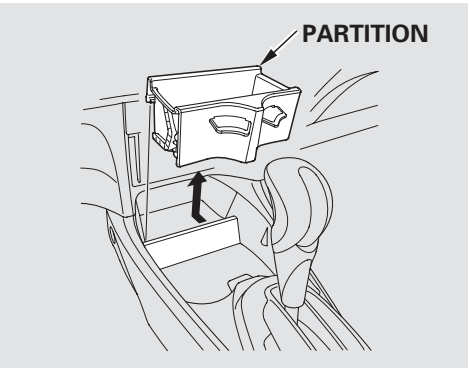

There is a tray in the front of the center console. You can also take the partition out to extend the tray.

When you use the front beverage holders, you need to put the partition back to the original position on the center console.

Center Pockets

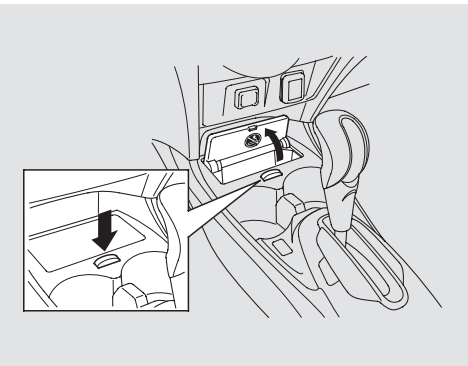

On EX models
To open the center pocket, press the release button. The lid will unlatch and swing up. To close it, push the lid down until it latches.

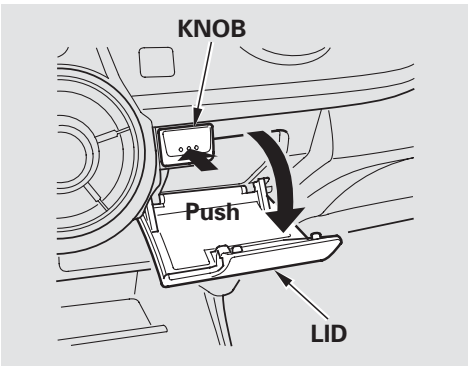

On all models
To open the center pocket, push on the knob. To close it, push the lid up until it latches.

Coat Hook

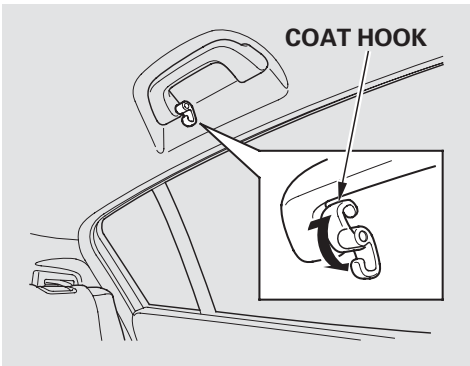

To use a coat hook, slide it out slightly, then pull it down.

Make sure the coat hook is pulled up when you are not using it. This hook is not designed for large or heavy items.

Sun Visors

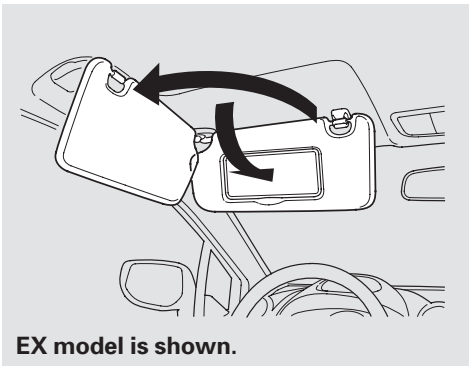

To use the sun visor, pull it down. You can also use the sun visor at the side window. Remove the support rod from the clip and swing the sun visor toward the side window.

Make sure you put the sun visor back in place when you are getting into or out of the vehicle.

Vanity Mirror

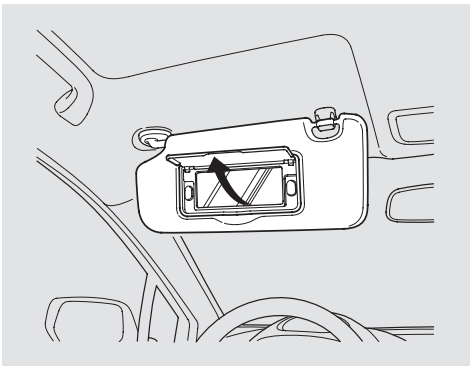

On U.S. EX models and Canadian models

To use the vanity mirror on the back of the sun visor, pull up the cover.

Ceiling Light

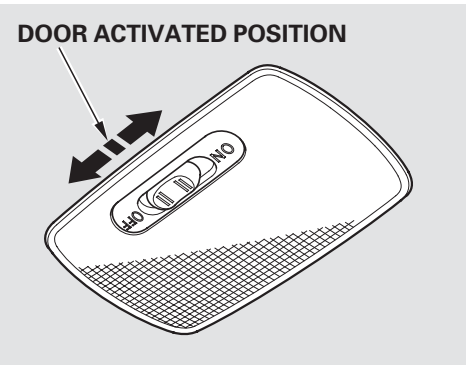

The ceiling light has a three-position switch: ON, Door Activated, and OFF. In the Door Activated (center) position, the light comes on when you:

- Open any door.
- Unlock the driver's door with the key or remote transmitter.

After all doors are closed tightly, the light dims slightly, then fades out in about 30 seconds.

The ceiling light (with the switch in the center position) comes on when you remove the key from the ignition switch. If you do not open a door, the light stays on, then fades out in about 30 seconds.

To change the "INTERIOR LIGHT DIMMING TIME" setting, see page 105.

If you leave any door open without the key in the ignition switch, the ceiling light will go off after about 15 minutes.

Spotlights

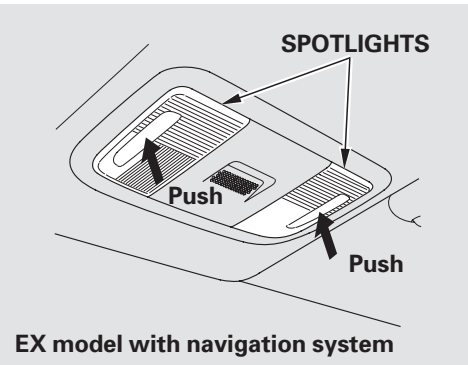

EX model with navigation system

Turn on a spotlight by pushing the lens. Push the lens again to turn it off. You can use the spotlights at all times.

CONTINUED

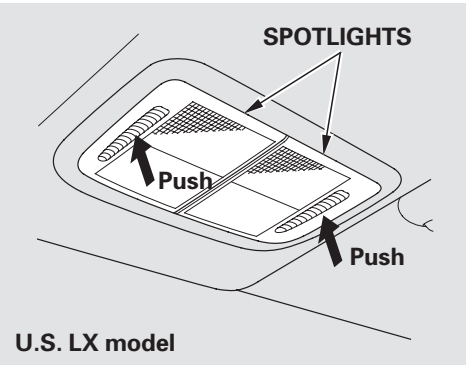

Cargo Area Light

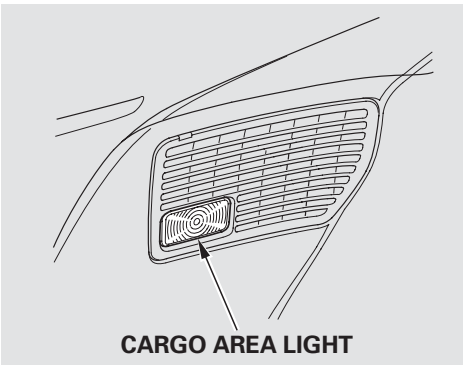

Your vehicle has a cargo area light on the left side panel of the cargo area. It comes on when you open the hatch.

The climate control system in your vehicle provides a comfortable driving environment in all weather conditions.

The standard audio system has many features. This section describes those features and how to use them.

Your vehicle has an anti-theft audio system that requires a code number to enable it.

The security system helps to discourage vandalism and theft of your vehicle.

Climate Control System 164
Audio System 170
Insight model
Playing the AM/FM Radio..... 171
Playing a Disc..... 175
Disc Player Error Messages 182
LX model and EX model without navigation system
Playing the FM/AM Radio..... 183
Playing a Disc..... 190
Disc Player Error Messages 196
Playing an iPod®..... 197
iPod® Error Messages 203
Playing a USB Flash Memory Device 204
USB Flash Memory Device Error Messages..... 213
FM/AM Radio Reception..... 214
Protecting Your Discs..... 216
Remote Audio Controls..... 219
Auxiliary Input Jack..... 220
Radio Theft Protection..... 221
Setting the Clock 222
Security System 223
Cruise Control..... 224
Bluetooth® HandsFreeLink® 227

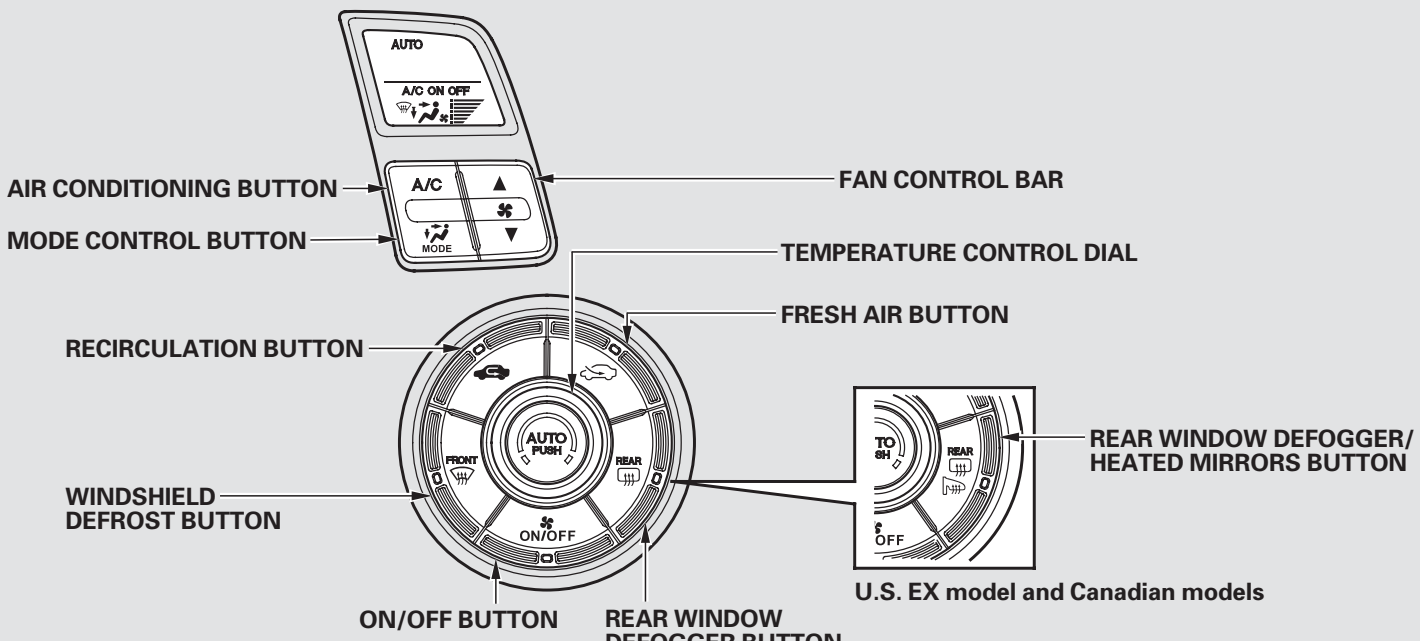
AUTO
A/C ON OFF
A/C
MODE
AIR CONDITIONING BUTTON
MODE CONTROL BUTTON
FAN CONTROL BAR
TEMPERATURE CONTROL DIAL
FRESH AIR BUTTON
RECIRCULATION BUTTON
AUTO PUSH
FRONT
REAR
ON/OFF
WINDSHIELD DEFROST BUTTON
ON/OFF BUTTON
REAR WINDOW DEFOGGER BUTTON
REAR WINDOW DEFOGGER/ HEATED MIRRORS BUTTON
OFF
U.S. EX model and Canadian models

Voice Control System
On models with navigation system
The climate control system for your vehicle can also be operated using the voice control system. See the navigation system manual for complete details.

Using Automatic Climate Control
The automatic climate control system in your vehicle maintains the interior temperature you select. The system also adjusts the fan speed and airflow levels.

1. Press the AUTO button. You will see AUTO in the display.

2. Set the desired temperature by turning the temperature control dial.

   The system automatically selects the proper mix of conditioned and/or heated air that will, as quickly as possible, raise or lower the interior temperature to your preference.

During the auto idle stop, the air conditioning system will be turned off. If the ECON mode is selected, the fan may also be turned off.

Temperature Control
Turning this dial clockwise increases the temperature of the airflow.

CONTINUED

When you set the temperature to its lower limit (Lo) or its upper limit (Hi), the system runs at full cooling or heating only. It does not regulate the interior temperature.

When you adjust a fan control, the fan is taken out of AUTO mode.

ON/OFF Button
Each time you press this button, the climate control system switches between on and off. Turning on the system with this button selects your last climate control selection.

To Turn Everything Off
To turn the system completely off, press the ON/OFF button.

- Keep the system completely off for short periods only.
- To keep stale air and mustiness from collecting, you should have the fan running at all times.

Semi-automatic Operation
You can manually select various functions of the climate control system when it is in fully automatic mode. All other features remain automatically controlled. Making any manual selection causes the word AUTO in the display to go out.

Fan Control
Press the ▲ side of the bar to increase the fan speed and airflow. Press the ▼ side of the bar to decrease them.

Air Conditioning (A/C) Button
This button turns the air conditioning on and off. You will see A/C ON or A/C OFF in the display.

When you turn the A/C off, the system cannot regulate the inside temperature if you set the temperature control below the outside temperature.

Recirculation Button
When the recirculation indicator is on, air from the vehicle's interior is sent throughout the system again.

Select recirculation mode when driving through dusty or smoky conditions, then return to fresh air mode.

Fresh Air Button
The outside air intakes for the climate control system are at the base of the windshield. Keep this area clear of leaves and other debris.

When the fresh air indicator is on, air is brought in from the outside of the vehicle.

The system should be left in fresh air mode under almost all conditions. Keeping the system in recirculation mode, particularly with the A/C off, can cause the windows to fog up.

Rear Window Defogger Button
This button turns the rear window defogger on and off (see page 126).

On U.S. EX models and all Canadian models
Pushing this button also turns the power mirror heaters on and off.

CONTINUED

Mode Control
Use the mode control button to select the vents the air flows from. Some air will flow from the dashboard vents in all modes.

Airflow is divided between the floor and corner vents and the defroster vents at the base of the windshield.

Air flows from the floor vents.

Airflow is divided between the vents in the dashboard and the floor vents.

Air flows from the center and corner vents in the dashboard.

Windshield Defroster Button
This button directs the main airflow to the windshield for faster defrosting. It also overrides any mode selection you may have made.

When you select , the system automatically switches to fresh air mode and turns on the A/C. For faster defrosting, manually set the fan speed to high. You can also increase airflow to the windshield by closing the corner vents on the dashboard.

When you turn off by pressing the button again, the system returns to its former settings.

To remove fog from the inside of the windows, set as follows:

1. Select . The system automatically switches to fresh air mode and turns on the A/C.
2. Adjust the temperature so the airflow feels warm.
3. Select to help clear the rear window.
4. To increase airflow to the windshield, close the corner vents. For faster defogging, manually set the fan speed to high.

For your safety, make sure you have a clear view through all the windows before driving.

Sunlight, Temperature, and Humidity Sensors

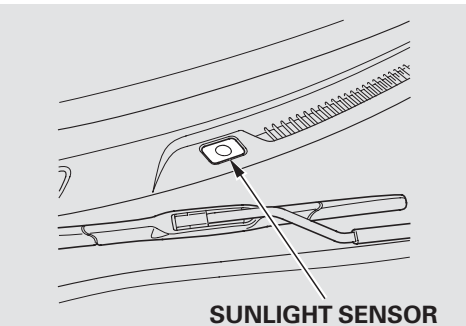

Insight model and LX model

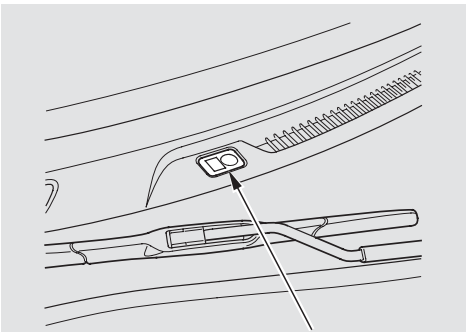

EX models

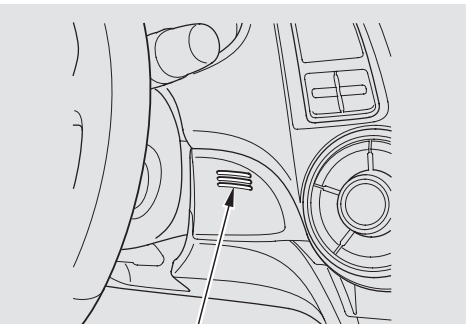

To regulate the interior temperature and humidity, the climate control system has two sensors. A sunlight sensor is located in the top of the dashboard and a temperature/humidity sensor is next to the steering column. Do not cover the sensors or spill any liquid on them.

Audio System

An audio system is standard on all models. Read the appropriate pages (as shown below) to use your vehicle's audio system.

For Insight model, see pages 171 through 182.

For LX and EX models without navigation system, see pages 183 through 213.

For EX model with navigation system, see navigation system manual for how to operate the audio system.

Insight model

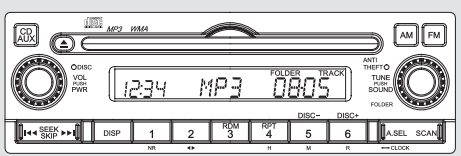

LX and EX models without navigation system

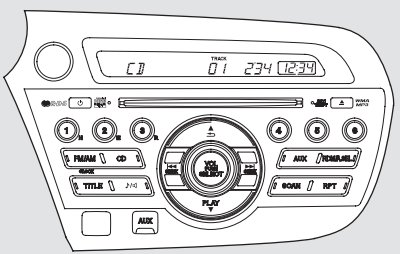

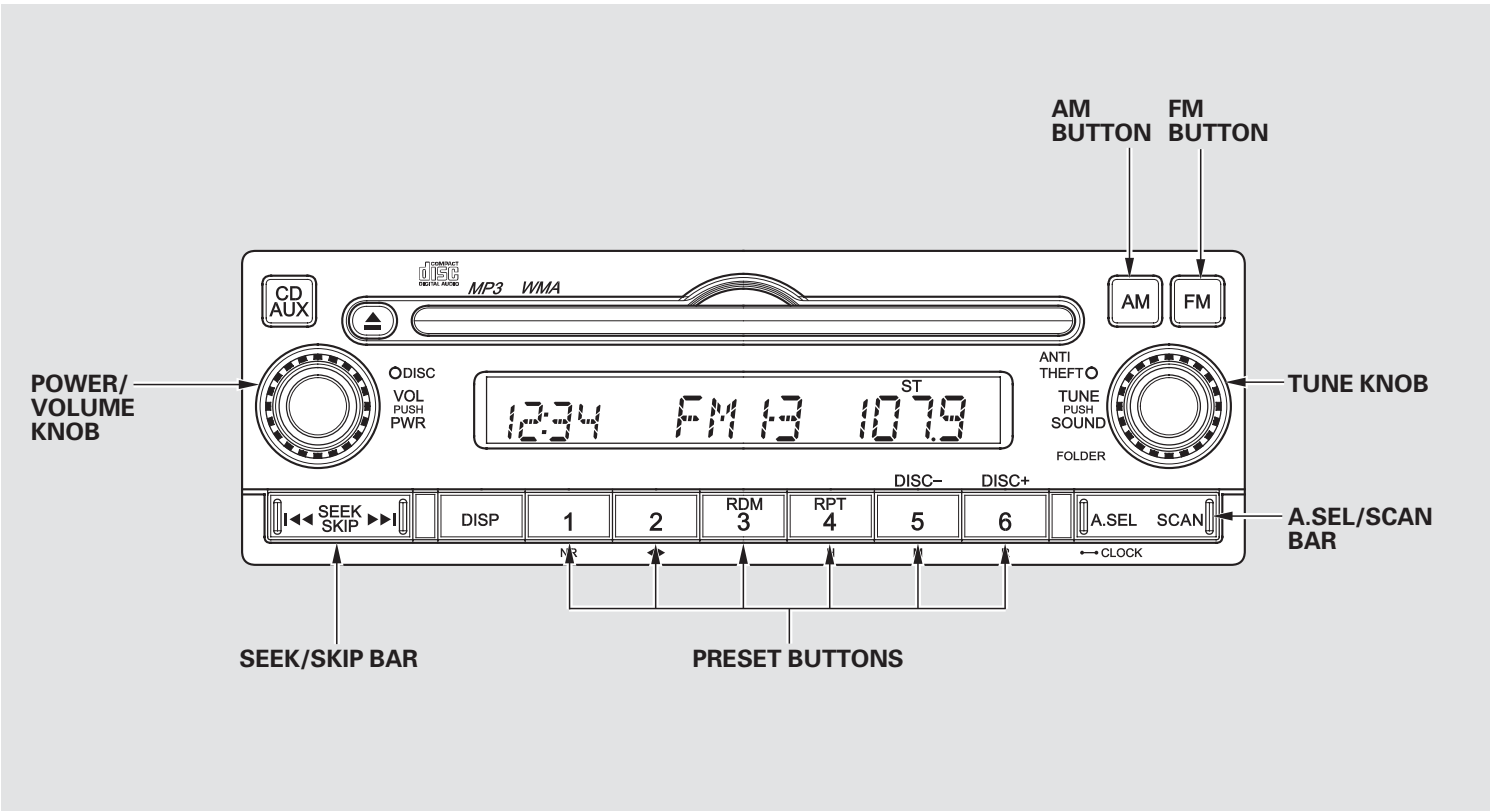
AM BUTTON
FM BUTTON
CD AUX
MP3 WMA
AM
FM
POWER/ VOLUME KNOB
DISC
VOL
PUSH
PWR
ST
12:34 FM 1-3 107.9
ANTI THEFT
TUNE
PUSH
SOUND
FOLDER
TUNE KNOB
DISC–
DISC+
SEEK SKIP
DISP
1
2
RDM 3
RPT 4
5
6
A.SEL
SCAN
CLOCK
A.SEL/SCAN BAR
SEEK/SKIP BAR
PRESET BUTTONS

To Play the AM/FM Radio
The ignition switch must be in the ACCESSORY (I) or ON (II) position. Turn the system on by pushing the power/volume knob or the AM or FM button. Adjust the volume by turning the power/volume knob.

The band and frequency that the radio was last tuned to is displayed. To change bands, press the AM or FM button. On the FM band, ST will be displayed if the station is broadcasting in stereo. Stereo reproduction on AM is not available.

To Select a Station
You can use any of five methods to find radio stations on the selected band: tune, seek, scan, the preset buttons, and auto select.

TUNE — Use the TUNE knob to tune the radio to a desired frequency. Turn the knob to the right to tune to a higher frequency, and turn it to the left to tune to a lower frequency.

SEEK/SKIP — The seek function searches up and down from the current frequency to find a station with a strong signal. To activate it, press the ⏮ or ⏭ side of the SEEK bar, then release it.

SCAN — The scan function samples all stations with strong signals on the selected band. To activate it, press the right side of the A. SEL/SCAN bar, then release it. You will see SCAN in the display. The system will scan for a station with a strong signal. When it finds one, it will stop and play that station for about 10 seconds.

If you do nothing, the system will then scan for the next strong station and play it for 10 seconds. When it plays a station you want to listen to, press the SCAN side of the bar again.

Preset — Each preset button can store one frequency on AM and two frequencies on FM.

1. Select the desired band, AM or FM. You can store one frequency on FM1, and one frequency on FM2 with each preset button.

2. Use the tune, seek, or scan function to tune the radio to a desired station.

3. Pick a preset button (1—6), then press and hold it until you hear a beep.

4. Repeat steps 1 through 3 to store a total of six stations on AM and twelve stations on FM.

AUTO SELECT — If you are traveling and can no longer receive your preset stations, you can use the auto select feature to find stations in the local area.

Press the left side of the A. SEL/SCAN bar. You will see A. SEL flashing in the display, and the system goes into scan mode for several seconds. It stores the frequencies of six AM, and twelve FM stations in the preset buttons.

You will see a “0” displayed after pressing a preset button if auto select cannot find a strong station for every preset button.

If you do not like the stations auto select has stored, you can store other frequencies on the preset buttons as previously described.

To turn off auto select, press the A. SEL side of the bar. This restores the presets you originally set.

For information on AM/FM radio frequencies and reception, see page 214.

Adjusting the Sound
Press the SOUND (TUNE) knob repeatedly to display the BASS, TREBLE, FADER, BALANCE, and SVC (speed-sensitive volume compensation) settings.

BASS — Adjusts the bass.

TREBLE — Adjusts the treble.

FADER — Adjusts the front-to-back strength of the sound.

BALANCE — Adjusts the side-to-side strength of the sound.

SVC — Adjusts the volume level based on the vehicle speed.

Each mode is shown in the display as it changes. Turn the TUNE knob to adjust the setting to your liking.

Except SVC adjustment
When the level reaches the center, you will see "C" in the display.

Wait a few seconds and the display returns to normal.

Speed-sensitive Volume Compensation (SVC)
The SVC mode controls the volume based on vehicle speed. The faster you go, the louder the audio volume becomes. As you slow down, the audio volume decreases.

The SVC has four modes: SVC OFF, SVC LOW, SVC MID, and SVC HIGH. Turn the TUNE knob to adjust the setting to your liking. If you feel the sound is too loud, choose low. If you feel the sound is too quiet, choose high.

Audio System Lighting
You can use the instrument panel brightness control knob to adjust the illumination of the audio system (see page 124). The audio system illuminates when the parking lights are on, even if the radio is turned off.

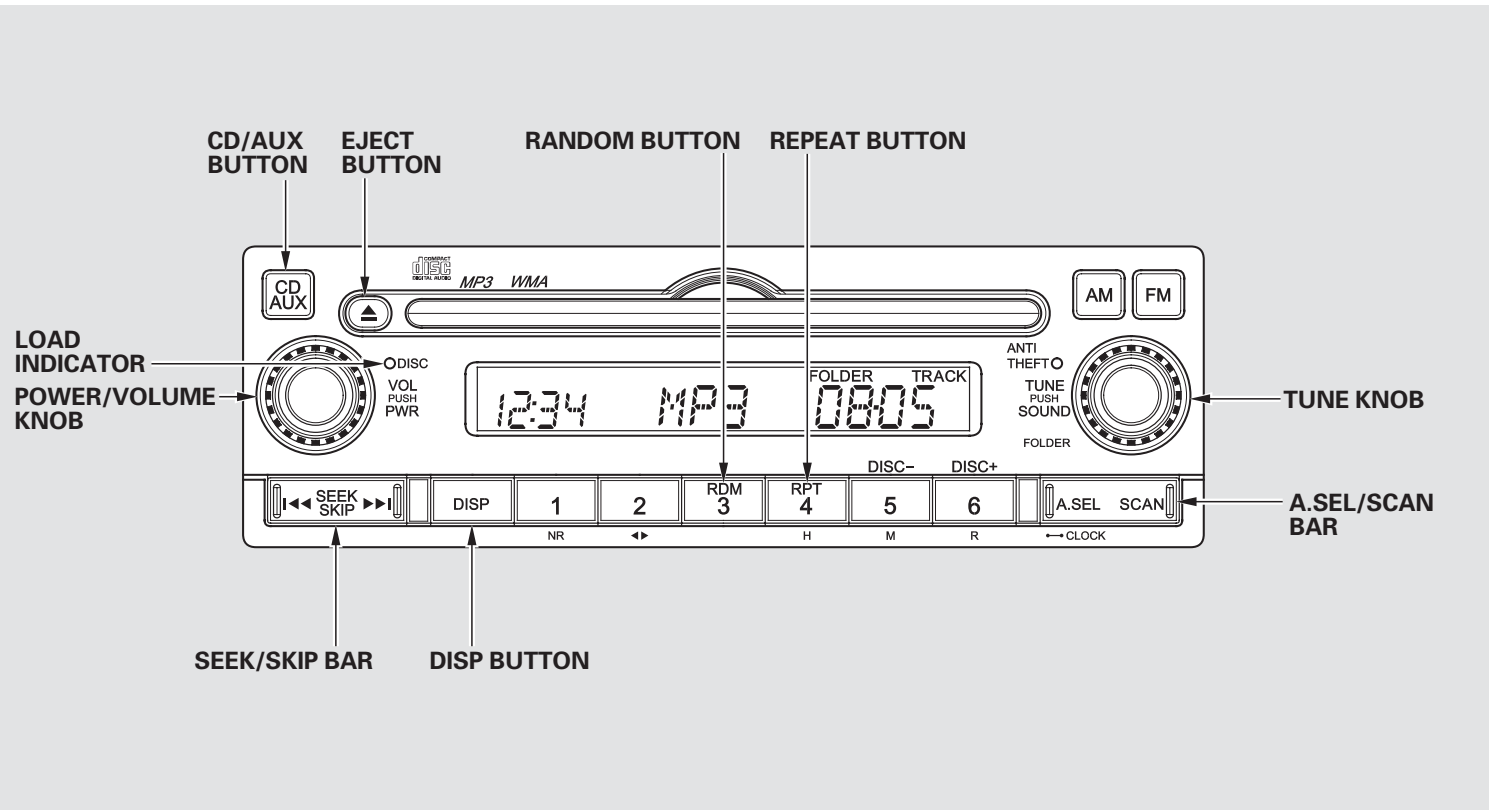
CD/AUX BUTTON
EJECT BUTTON
RANDOM BUTTON
REPEAT BUTTON
LOAD INDICATOR
POWER/VOLUME KNOB
TUNE KNOB
A.SEL/SCAN BAR
SEEK/SKIP BAR
DISP BUTTON
CD AUX
MP3 WMA
AM
FM
DISC
VOL
PUSH
PWR
12:34 MP3 0805
FOLDER
TRACK
ANTI THEFT
TUNE
PUSH
SOUND
FOLDER
DISC–
DISC+
SEEK SKIP
DISP
1
2
RDM
3
RPT
4
5
6
A.SEL
SCAN
NR
H
M
R
CLOCK

To Play a Disc
To load or play a disc, the ignition switch must be in the ACCESSORY (I) or ON (II) position.

You operate the disc player with the same controls used for the radio. To select the disc player, press the CD/AUX button. You will see “CD” in the display.

NOTICE

Do not use discs with adhesive labels. The label can curl up and cause the disc to jam in the unit.

This audio system can also play CD-Rs and CD-RWs compressed in MP3 or WMA formats. When playing a disc in MP3, you will see “MP3” in the display. In WMA format, “WMA” will appear in the display. You can select up to 99 folders, or up to 255 tracks/files.

NOTE:
If a file on an MP3 or WMA disc is protected by digital rights management (DRM), the audio unit displays FORMAT, and then skips to the next file.

Video CDs and DVDs do not work in this unit.

Depending on the software the files were made with, it may not be possible to play some files, or display some text data.

To Load a Disc
Insert a disc about halfway into the disc slot. The drive will pull the disc in the rest of the way to play it. You operate the disc player with the same controls used for the radio. The number of the current track is shown in the display. When playing a disc in MP3 or WMA, the numbers of the current folder and file are shown. The system will continuously play a disc until you change modes.

You cannot load and play 3-inch (8-cm) discs in this system.

Text Data Display Function
Each time you press the DISP button, the display shows you the text data on a disc, if the disc was recorded with text data.

You can see the album, artist, and track name in the display. If a disc is recorded in MP3 or WMA, you can see the folder and file name, and the album, artist, and track tag.

With the folder name, you will see the FOLDER indicator in the display. The TRACK indicator is shown with the file or track name.

The display shows up to 10 characters of selected text data (the folder name, file name, etc.). If the text data has more than 10 characters, you will see the first 9 characters and the > indicator in the display. Press and hold the DISP button until the next 10 characters are shown.

CONTINUED

You will also see some text data under these conditions:

- When a new folder, file, or track is selected.
- When you change the audio mode to play a disc with text data or in MP3 or WMA.
- When you insert a disc, and the system begins to play.

When playing a CD-DA with text data, the album and track name are shown in the display. With a disc in MP3 or WMA, the display shows the folder and file name.

To Change or Select Tracks/Files

You can use the SEEK/SKIP bar while a disc is playing to select passages and change tracks (files in MP3/WMA mode).

SEEK/SKIP — Each time you press and release the ►►I side of the SEEK/SKIP bar, the player skips forward to the beginning of the next track (file in MP3 or WMA mode). Press and release the I◄◄ side, to skip backward to the beginning of the current track. Press it again to skip to the beginning of the previous track.

To move rapidly within a track, press and hold the ►►I or I◄◄ side of the SEEK/SKIP bar.

In MP3 or WMA mode
FOLDER SELECTION — To select a different folder, turn the TUNE knob to move to the beginning of the next folder. Turn the knob to the right to skip to the next folder, and to the left to move to the beginning of the current folder. Turn it again to skip to the beginning of the previous folder. Turning the TUNE knob more than one click skips several folders at a time.

REPEAT (TRACK/FILE REPEAT) — To continuously replay a track (files in MP3 or WMA mode), press and release the RPT button. You will see "RPT" in the display. Press and hold the RPT button for 2 seconds to turn it off.

In MP3 or WMA mode
FOLDER-REPEAT — This feature, when activated, replays all files in the selected folder in the order they are compressed. To activate folder repeat, press the RPT button twice. You will see F-RPT in the display. The system continuously replays the current folder. Press the RPT button again to turn it off. Pressing the RDM button, or selecting a different folder with the TUNE knob also turns off the repeat feature.

Each time you press and release the RPT button, the mode changes from file repeat to folder repeat, then to normal play.

RANDOM (Random within a disc) — This feature plays the tracks within a disc (the files in MP3 or WMA mode) in random order. To activate random play, press and release the RDM button. In MP3 or WMA mode, press the RDM button repeatedly to select RDM (within a disc random play). You will see "RDM" in the display. Press the RDM button for 2 seconds to return to normal play.

CONTINUED

In MP3 or WMA mode
FOLDER-RANDOM — This feature, when activated, plays all files on the selected folder in random order. To activate folder random, press the RDM button. You will see F-RDM in the display. The system will then select and play files randomly. This continues until you deactivate folder random by pressing and holding the RDM button for 2 seconds.

Each time you press and release the RDM button, the mode changes from folder random play to random play (within a disc random play), then to normal play.

SCAN (TRACK/FILE SCAN) — The scan function samples all tracks (files in MP3 or WMA) on the disc in the order they are recorded on the disc. To activate scan, press and release the SCAN bar. You will see SCAN in the display. You will get a 10 second sampling of each track/file on the disc. Press and hold the SCAN button for about 2 seconds to get out of scan mode and play the last track/file sampled.

Pressing either side of the SEEK/SKIP bar also turns off the scan feature.

In MP3 or WMA mode
F-SCAN (FOLDER SCAN) — This feature, when activated, samples the first file of each folder on the disc. To activate folder scan, press the SCAN bar twice. You will see F-SCAN in the display.

The system plays the first file in the first folder for about 10 seconds. If you do nothing, the system will then play the first files in the next folders for 10 seconds. After playing the first file in the last folder, the system plays normally.

Pressing either side of the SEEK/SKIP bar, selecting a different folder with the TUNE knob, or pressing the SCAN bar, also turns off folder scan.

Each time you press and release the SCAN bar, the mode changes from scan to folder scan, then to normal play.

To Stop Playing a Disc
Press the eject button (⏏) to remove the disc. If you eject the disc, but do not remove it from the slot, the system will automatically reload the disc after 10 seconds and put it in pause mode. To begin playing, press the CD/AUX button.

You can also eject the disc when the ignition switch is off.

To play the radio when a disc is playing, press the AM or FM button. Press the CD/AUX button again to switch back to the disc player.

If you turn the system off while a disc is playing, either with the power/volume knob or by turning off the ignition switch, the disc will stay in the drive. When you turn the system back on, the disc will begin playing where it left off.

Protecting Discs
For information on how to handle and protect compact discs, see page 216.

Disc Player Error Messages (Insight model)

If you see an error message in the display while playing a disc, find the cause in the chart to the right. If you cannot clear the error message, take your vehicle to your dealer.
The chart on the right explains the error messages you may see in the display while playing a disc.
If you see an error message in the display while playing a disc, press the eject button. After ejecting the disc, check it for damage or deformation. If there is no damage, insert the disc again.
For additional information on damaged discs, see page 217 .

The audio system will try to play the disc. If there is still a problem, the error message will reappear. Press the eject button, and pull out the disc. Insert a different disc. If the new disc plays, there is a problem with the first disc. If the error message cycle repeats and you cannot clear it, take your vehicle to a dealer.

Error Message	Cause	Solution
CD FORMAT	Track/File format not supported	Current track will be skipped. The next supported track or file plays automatically.
BAD DISC CHECK MANUAL PUSH EJECT	Mechanical Error	Press the eject button and pull out the disc. Check the disc for serious damage, signs of deformation, excessive scratches, and/or dirt see page 217. Insert the disc again. If the code does not disappear, or the disc cannot be removed, consult your dealer. Do not try to force the disc out of the player.
BAD DISC CHECK MANUAL	Servo Error	

The ejected disc will not be reloaded automatically.

Playing the FM/AM Radio (LX model and EX model without navigation system)

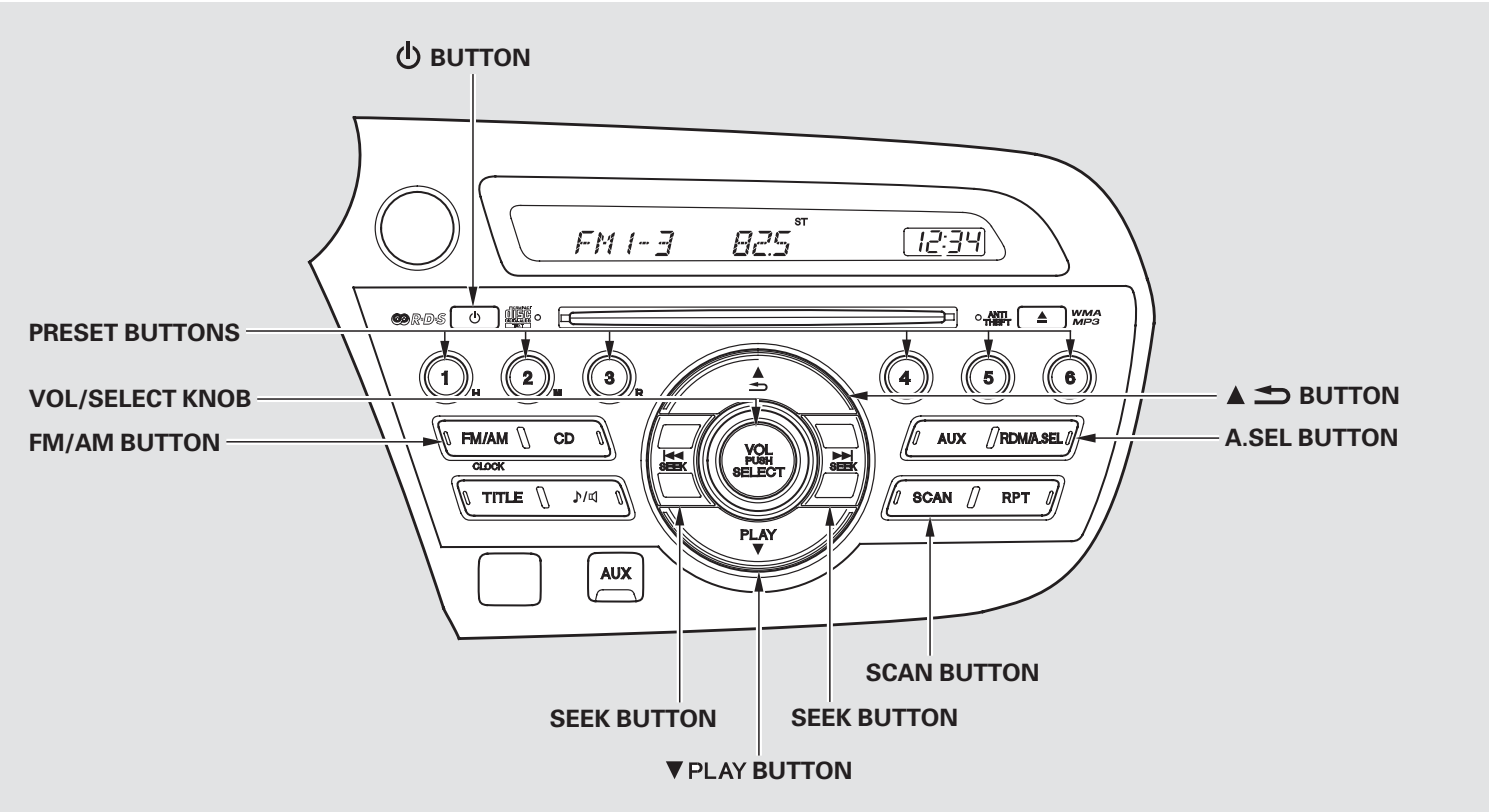

Features

Playing the FM/AM Radio (LX model and EX model without navigation system)

To Play the FM/AM Radio
The ignition switch must be in the ACCESSORY (I) or ON (II) position. Turn the system on by pushing the FM/AM button. Adjust the volume by turning the VOL/SELECT knob.

The band and frequency that the radio was last tuned to are displayed. To change bands, press the FM/AM button. On the FM band, ST will be displayed if the station is broadcasting in stereo. Stereo reproduction in AM is not available.

To Select a Station
You can use any of five methods to find radio stations on the selected band: tune, seek, scan, the preset buttons, and auto select.

TUNE — Use the SEEK button to tune to a desired frequency. Press the ▶▶| SEEK button to tune to a higher frequency, and the |◀◀ SEEK button to tune to a lower frequency.

You can also operate the tune function by using the VOL/SELECT knob. Press the VOL/SELECT knob and you will see "SEL" in the display. Turn the knob right to tune to a higher frequency, or left to tune to a lower frequency. To turn it off, press the VOL/SELECT knob or ▲ ⮌ button, or ▼PLAY button. The system will return to the normal display about 10 seconds after you stop adjusting the tune mode.

SEEK — The SEEK function searches up and down from the current frequency to find a station with a strong signal. To activate it, press and hold the |◀◀ SEEK or ▶▶| SEEK side of the SEEK button until you hear a beep, then release it.

SCAN — The scan function samples all stations with strong signals on the selected band. To activate it, press the SCAN button, then release it. You will see SCAN in the display. When the system finds a strong signal, it will stop and play that station for about 10 seconds.

If you do nothing, the system will then scan for the next strong station and play it for 10 seconds. When it plays a station you want to listen to, press the SCAN button again.

Preset — Each preset button can store one frequency on AM and two frequencies on FM.

1. Select the desired band, AM or FM.

2. Use the tune, seek, or scan function to tune the radio to a desired station.

3. Pick a preset button (1—6), then press and hold it until you hear a beep.

4. Repeat steps 1 through 3 to store a total of six stations on AM and twelve stations on FM.

AUTO SELECT — If you are traveling and can no longer receive your preset stations, you can use the auto select feature to find stations in the local area.

Press the A. SEL button. "A. SEL" flashes in the display, and the system goes into scan mode for several seconds. It stores the frequencies of six AM and twelve FM stations in the preset buttons.

You will see a "0" displayed after pressing a preset button if auto select cannot find a strong station for that preset button.

If you do not like the stations auto select has stored, you can store other frequencies on the preset buttons as previously described.

To turn off auto select, press the A. SEL button. This restores the presets you originally set.

For information on FM/AM radio frequencies and reception, see page 214 .

Radio Data System (RDS)
On the FM band, you can select a favorite station and display the program service name provided by the radio data system (RDS).

Program Service (PS) Name Display
The program service name display function shows the name of the station you are listening to. You can turn this function on or off.

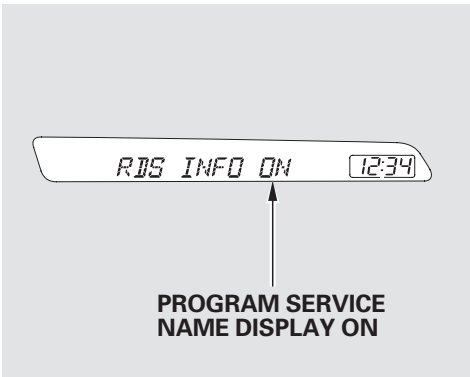

To switch the function between on and off, press and release the TITLE button. With the system on, you will see the “RDS INFO ON” message on the display. If the station you are listening to is an RDS station, the display shows the station name.

If the station you are listening to is not an RDS station, the display continues to show the frequency with the PS name display function on.

When you turn off this function by pressing the TITLE button, the display shows “RDS INFO OFF.”

Radio Data System (RDS) Category

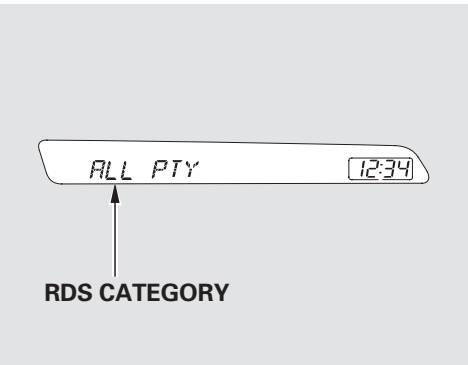

With the FM band selected, you can select the program category provided by the RDS. Press ▲ ⮌ or ▼ PLAY button to display and select an RDS category. The principal RDS categories are shown as follows;

ALL PTY: All RDS category stations
ROCK: Rock, classic rock and soft rock music
COUNTRY: Country music
SOFT: Adult hits and soft music
TOP 40: Top 40 hits
OLDIES: Nostalgia music and oldies
R & B: Rhythm and blues, and soft rhythm and blues
RELIGION: Programs concerned with religion.
CLASSIC: Classical music
JAZZ: Jazz
INFO: News, information, sports, talk shows, foreign language, personality, public, college, and weather
TRAFFIC: Traffic information

Press ▲ ⮌ or ▼ PLAY button to select an RDS category. The display shows the selected RDS category name for about 10 seconds. You can use the search or scan function to find radio stations in the selected RDS category. If you do nothing while the RDS category name is displayed, the selected category is canceled.

CONTINUED

RDS Program Search
This function searches a frequency for a strong signal from the frequency that carry the selected RDS category information. This can help you to find a station in your favorite category. To activate it, press the SEEK or SEEK side of the SEEK button. You will see the selected RDS category name blinking while searching it. When the system finds a station, the selected RDS category name will be displayed again for about 5 seconds.

If the system does not find a station, “NOTHING” blinks for about five seconds, then the system goes back to the last selected station.

RDS Program SCAN
The scan function samples all stations with strong signals on the selected RDS category. To activate it, press and release the SCAN button. You will see SCAN in the display. The system will scan for a station with a strong signal in the selected RDS category. You will also see the selected RDS category name blinking while searching it. When it finds a strong signal, it will stop and play that station for about 10 seconds.

If you do nothing, the system will scan for the next strong station and play it for 10 seconds. When it plays a station that you want to listen to, press the SCAN button again.

If the system does not find a station, “NOTHING” blinks for about five seconds, then the system goes back to the last selected station.

You can use the RDS program search or scan function even if the RDS information display function is off. In this case, the display shows a frequency in place of a RDS station name.

Adjusting the Sound
Press the sound ( ) button to select an appropriate setting: bass, treble, fader, balance, and SVC (speed-sensitive volume compensation). Turn the VOL/SELECT knob to adjust the setting.

BAS — Adjusts the bass.

TREBLE — Adjusts the treble.

FADER — Adjusts the front-to-back strength of the sound.

BALANCE — Adjusts the side-to-side strength of the sound.

Each mode is shown in the display as it changes. Turn the VOL/SELECT knob to adjust the setting to your liking. When the level reaches the center, you will see “C” in the display.

SVC — Adjusts the volume level based on the vehicle speed.

Wait 10 seconds and the display returns to normal.

Speed-sensitive Volume Compensation (SVC)
The SVC mode controls the volume based on vehicle speed. The faster you go, the louder the audio volume becomes. As you slow down, the audio volume decreases.

The SVC has four modes: SVC OFF, SVC LOW, SVC MID, and SVC HIGH. Turn the VOL/SELECT knob to adjust the setting to your liking. If you feel the sound is too loud, choose low. If you feel the sound is too quiet, choose high.

Audio System Lighting
You can use the instrument panel brightness control knob to adjust the illumination of the audio system (see page 124). The audio system illuminates when the parking lights are on, even if the system is turned off.

Playing a Disc (LX model and EX model without navigation system)

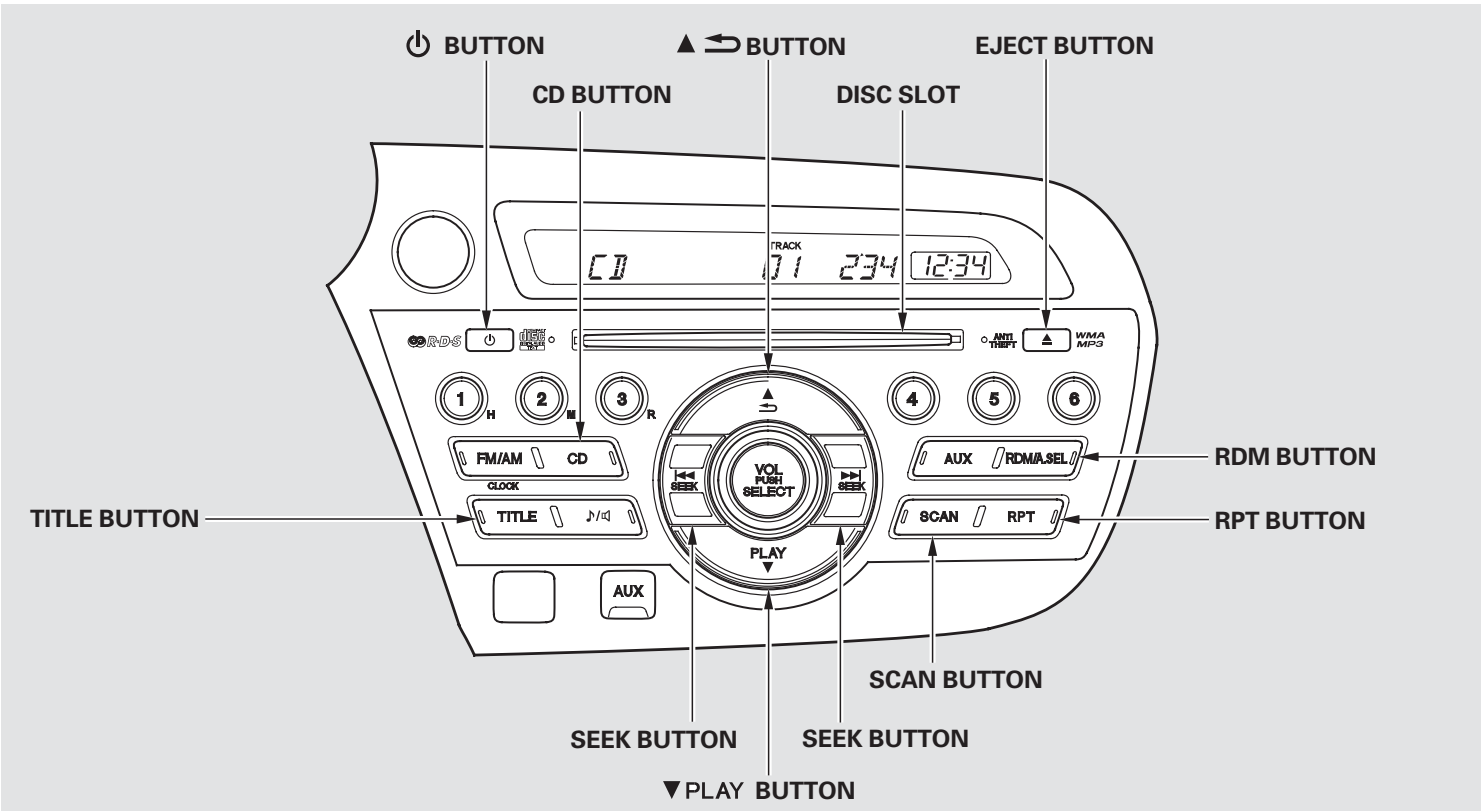

To Play a Disc
You operate the in-dash disc player with the same controls used for the radio. To select the disc player, press the CD button. You will see “CD” in the display. The folder or track numbers are shown in the display. You can also select the displayed information with the TITLE button (see page 192). The system will continuously play a disc until you change modes.

NOTICE

Do not use discs with adhesive labels. The label can curl up and cause the disc to jam in the unit.

This audio system can also play CD-Rs and CD-RWs compressed in MP3 or WMA formats. The numbers of the folder and track playing are shown in the display on the disc player. A disc can support more than 99 folders, and each folder can hold more than 255 playable files. A disc can hold up to 999 files in total.

When there are more than 99 folders in a disc, the audio display only shows two digits.

NOTE:
If a file on a WMA disc is protected by digital rights management (DRM), the audio unit displays UNSUPPORTED, and then skips to the next file.

If you have a disc that is a combination of CD-DA tracks and MP3/WMA files, you can choose the format to listen by pressing the CD button.

Video CDs and DVDs will not work in this unit.

A disc compressed in AAC format cannot be played in this audio system.

Depending on the software the files were made with, it may not be possible to play some files, or display some text data.

CONTINUED

To Load a Disc
Insert a disc about halfway into the disc slot. The drive will pull the disc in the rest of the way to play it. You operate the disc player with the same controls used for the radio. The number of the current track is shown in the display. When playing a disc in MP3 or WMA, the numbers of the current folder and file are shown. The system will continuously play a disc until you change modes.

You cannot load and play 3-inch (8-cm) discs in this system.

For information on how to handle and protect compact discs, see page 216.

Text Data Display Function
Each time you press the TITLE button, the display shows you the text, if the disc was recorded with text data.

You can see the album, artist, and track name in the display. If a disc is recorded in MP3 or WMA, you can see the folder and file name, and the album, artist, and track tag.

With the folder name, you will see the FOLDER indicator in the display. The TRACK indicator is shown with the file or track name.

When you press and release the TITLE button while a disc without text data is playing, you will see “NO INFO” on the display.

The display shows up to 16 characters of selected text data (the folder name, file name, etc.).

If the text data has more than 16 characters, you will see the first 15 characters and the > indicator on the display. Press and hold the TITLE button until the next 16 characters are shown. You can see up to 31 characters of text data.

If you press and hold the TITLE button again, the display shows the first 15 characters again.

If any letter is not available, it is replaced with " . " (dot) in the display. When the disc has no text data, you will see "NO INFO" on the display.

You will also see some text data under these conditions:

- When a new folder, file, or track is selected.
- When you change the audio mode to play a disc with text data or in MP3 or WMA.
- When you insert a disc, and the system begins to play.

When playing a CD-DA with text data, the album and track name are shown in the display. With a disc in MP3 or WMA, the display shows the folder and file name.

To Change or Select Tracks/Files

You can use the SEEK button while a disc is playing to change tracks (files in MP3/WMA mode).

In MP3/WMA mode, use the ▲ ⮌ or ▼PLAY button to select folders in the disc, and use the SEEK button to change files.

SEEK/SKIP — Each time you press and release the ▶▶| SEEK side, the player skips forward to the beginning of the next track (files in MP3/WMA mode). Press and release the |◀◀ SEEK side to skip backward to the beginning of the current track. Press it again to skip to the beginning of the previous track.

To move rapidly within a track, press and hold the ▶▶| SEEK, or the |◀◀ SEEK button.

You can also operate the track selection by using the VOL/SELECT knob. Press the VOL/SELECT knob and you will see "SEL" in the display. Turn the knob to switch the track number. Press the VOL/SELECT knob or ▼PLAY button to set your selection. To turn it off, press the ▲ ⮌ button.

CONTINUED

In MP3/WMA mode
FOLDER SELECTION — To select a different folder, press the ▲ ⮌ or ▼PLAY button. Press the ▲ ⮌ button to skip to the next folder, and the ▼PLAY button to skip to the previous folder.

You can also operate the folder and file selection by using the VOL/SELECT knob. Press the VOL/SELECT knob and you will see "SEL" in the display. Turn the knob to switch the folder number and press the knob to set your selection. To turn it off, press the ▲ ⮌ button repeatedly.

REPEAT (TRACK/FILE REPEAT) — To continuously replay a track (file in MP3/WMA mode), press and release the RPT button. You will see RPT in the display. Press and hold the RPT button to turn it off.

In MP3/WMA mode
FOLDER-REPEAT — This feature, when activated, replays all the files in the selected folder in the order they are compressed in MP3/WMA. To activate folder repeat mode, press the RPT button repeatedly until you see F-RPT in the display. The system continuously replays the current folder. Press and hold the RPT button to turn it off.

Each time you press and release the RPT button, the mode changes from file repeat to folder repeat, then to normal play.

RANDOM (Random within a disc) — This feature plays the tracks within a disc in random order. In MP3/WMA mode, all files in all folders are played in random order. To activate random mode, press the RDM button repeatedly until you see RDM in the display. Press and hold the RDM button to turn it off.

In MP3/WMA mode
FOLDER-RANDOM — This feature, when activated, plays the files in the current folder in random order, rather than in the order they are compressed in MP3/WMA. To activate folder random play, press the RDM button. You will see F-RDM in the display. The system will then select and play files randomly. This continues until you deactivate folder random play by pressing and holding the RDM button.

Each time you press and release the RDM button, the mode changes from folder random play, to within a disc random play, then to normal play.

SCAN — The SCAN function samples all the tracks on the disc in the order they are recorded on the disc (all files in the current folder in MP3 or WMA mode). To activate the scan feature, press and release the SCAN button. You will see "SCAN" in the display. You will get a 10 second sampling of each track/file in the disc/folder. Press and hold the SCAN button to get out of scan mode and play the last track sampled.

In MP3/WMA mode
FOLDER-SCAN — This feature, when activated, samples the first file in each folder on the disc in the order they are recorded. To activate the folder scan feature, press the SCAN button repeatedly. You will see "F-SCAN" in the display. The system will then play the first file in the main folders for about 10 seconds. When it plays a file that you want to continue listening to, press and hold the SCAN button. When the system samples the first file of all folders, F-SCAN is canceled, and the system plays normally.

Each time you press and release the SCAN button, the mode changes from file scan to folder scan, then to normal play.

To Stop Playing a Disc
Press the eject button (⏏) to remove the disc. If you eject the disc, but do not remove it from the slot, the system will automatically reload the disc after 10 seconds and begin playing.

Press the FM/AM button to switch to the radio while a disc is playing. To play the disc, press the CD button.

If you turn the system off while a disc is playing, either with the (⏻) button or by turning off the ignition switch, the disc will stay in the drive. When you turn the system back on, the disc will begin playing where it left off.

Protecting Discs
For information on how to handle and protect compact discs, see page 216.

Disc Player Error Messages (LX model and EX model without navigation system)

The chart on the right explains the error messages you may see in the display while playing a disc.

If you see an error message in the display while playing a disc, press the eject button. After ejecting the disc, check it for damage or deformation. If there is no damage, insert the disc again.
For the additional information on damaged discs, see page 217 .

The audio system will try to play the disc. If there is still a problem, the error message will reappear. Press the eject button, and pull out the disc.

Insert a different disc. If the new disc plays, there is a problem with the first disc. If the error message cycle repeats and you cannot clear it, take your vehicle to a dealer.

Error Message	Cause	Solution
UNSUPPORTED	Track/File format not supported	Current track will be skipped. The next supported track or file plays automatically.
BAD DISC PLEASE CHECK OWNERS MANUAL PUSH EJECT	Mechanical Error	Press the EJECT button and pull out the disc. Check the disc for serious damage, signs of deformation, excessive scratches, and/or dirt (see page 217). Insert the disc again. If the code does not disappear, or the disc cannot be removed, consult your dealer. Do not try to force the disc out of the player.
CHECK DISC	FOCUS Error	Press the EJECT button and pull out the disc. Make sure it is inserted correctly in the disc player. Make sure the disc is not scratched or damaged. For more information, see page 217.
	TOC Error	

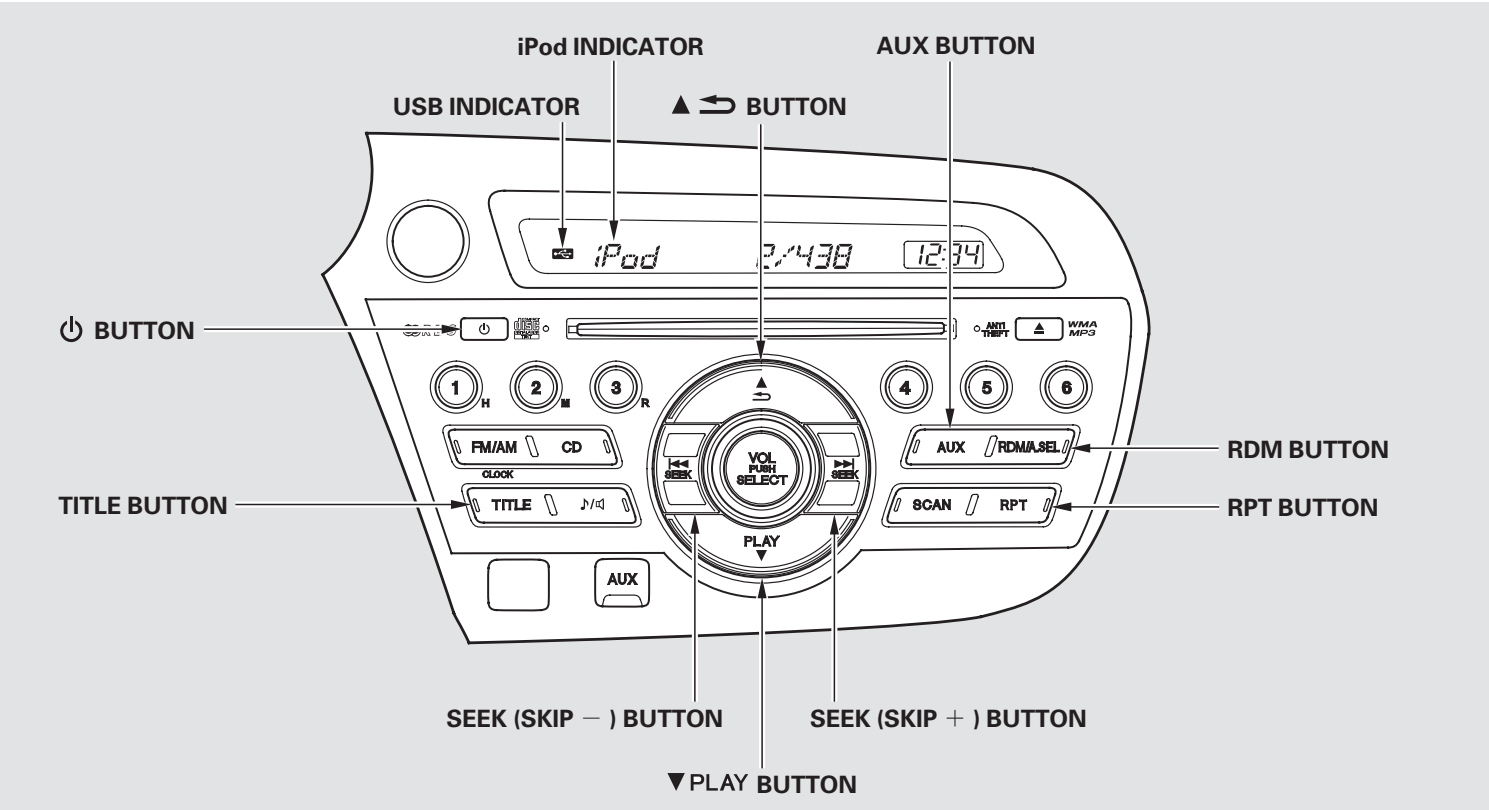
iPod INDICATOR
AUX BUTTON
USB INDICATOR
▲ ⮌ BUTTON
⏻ BUTTON
RDM BUTTON
TITLE BUTTON
RPT BUTTON
SEEK (SKIP −) BUTTON
SEEK (SKIP +) BUTTON
▼PLAY BUTTON
iPod
12:34
ANTI THEFT
WMA MP3
1
2
3
4
5
6
H
M
R
FM/AM
CD
CLOCK
TITLE
AUX
RDM/A.SEL
SCAN
RPT
SEEK
VOL PUSH SELECT
PLAY
AUX

To Play an iPod®
This audio system can play the audio files on the iPod® with the same controls used for the in-dash disc player. To play an iPod, connect it to the USB adapter cable in the console compartment by using your dock connector, then press the AUX button. The ignition switch must be in the ACCESSORY (I) or ON (II) position. The iPod will also be recharged with the ignition switch in these positions.

The system will only play songs stored on the iPod with iTunes.

iPod and iTunes are registered trademarks owned by Apple Inc.

iPod models confirmed to be compatible with your audio system using the USB adapter cable are:

Model
iPod classic 80/160 G
iPod classic 120 G
iPod classic 160 G (launch in 2009)
iPod (5th generation)
iPod nano
iPod touch

This system may not work with all software versions of these devices.

NOTE:
- Do not connect your iPod using a hub.
- Do not keep the iPod in the vehicle. Direct sunlight and high heat will damage it.
- Do not use an extension cable between the USB adapter cable equipped with your vehicle and your dock connector.
- We recommend backing up your data before playing it.
- Some devices cannot be powered or charged via the USB adapter. If this is the case, use the accessory adapter to supply power to your device.

Connecting an iPod

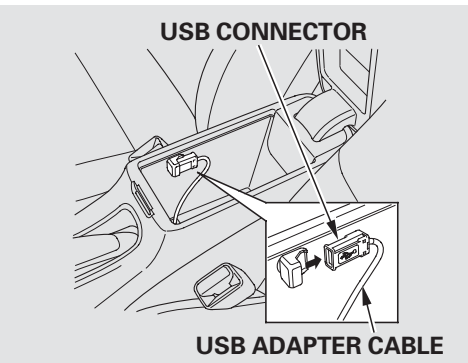

1. Unclip the USB connector by pivoting it, and pull out the USB adapter cable in the console compartment.

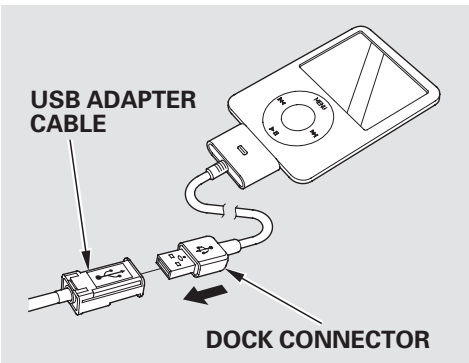

2. Connect your dock connector to the iPod correctly and securely.

3. Install the dock connector to the USB adapter cable securely.

If the iPod indicator does not appear in the audio display, check the connections, and try to reconnect the iPod a few times.

If the audio system still does not recognize the iPod, the iPod may need to be reset. Follow the instructions that came with your iPod, or you can find reset instructions online at *www.apple.com/*

CONTINUED

Text Data Display Function
Each time you press the TITLE button the display mode switches between the album name, the song name, the artist name, or name off (which turns off the text display).

The display shows up to 16 characters of the selected data. If the text data has more than 16 characters, you will see the first 15 characters and the > indicator in the display. Press and hold the TITLE button until the next 16 characters are shown.

To Change or Select Files
Use the SKIP button while an iPod is playing to change files.

SKIP – Each time you press the SEEK (SKIP +) button, the system skips forward to the beginning of the next file. Press the SEEK (SKIP –) button, to skip backward to the beginning of the current file. Press it again to skip to the beginning of the previous file.

To move rapidly within a file, press and hold either side (SEEK or SEEK) of the SKIP button.

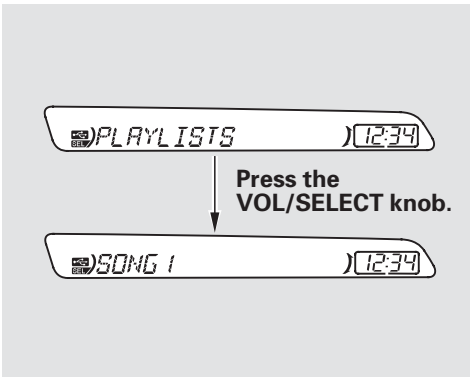

You can also select a file from any list on the iPod menu: playlists, artists, albums and songs, by using the VOL/SELECT knob. Push the VOL/SELECT knob to switch the display to an iPod menu, then turn the VOL/SELECT knob to select a desired list. Press the VOL/SELECT knob to set your selection.

The display shows items on the selected list. Turn the VOL/SELECT knob to select an item, then press the VOL/SELECT knob to set your selection.

If you select “ALL,” all available files on the selected list are played.

Pressing the ▲ ⮌ button goes back to the previous display and pressing the TITLE button cancels this setting mode.

To Select Repeat or Shuffle Mode:
You can select any type of repeat and shuffle mode by using the RPT button or the RDM button.

REPEAT — This feature continuously plays a file. To activate the repeat feature, press the RPT button. You will see “RPT” in the display. To turn it off, press the RPT button again.

SHUFFLE ALL — This feature plays all available files in a selected list (playlists, artists, albums or songs) in random order. To activate the shuffle all feature, press the RDM button. You will see “RDM” in the display. To turn it off, press and hold the RDM button.

CONTINUED

SHUFFLE ALBUM — This feature plays all available albums in a selected list (playlists, artists, albums or songs) in random order. The files in each album are played in the recorded order. To activate the shuffle album feature, press the RDM button repeatedly. You will see "F-RDM" in the display. To turn it off, press and hold the RDM button.

Each time you press the RDM button, the mode changes from shuffle all play to shuffle album play, then to normal play.

To Stop Playing Your iPod
To play the radio when an iPod is playing, press the FM/AM button. If a disc is in the audio unit, press the CD button to play the disc.

Disconnecting an iPod
You can disconnect the iPod at any time when you see the "OK to disconnect" message* in the iPod display. Always make sure you see the "OK to disconnect" message in the iPod display before you disconnect it. Make sure to follow the iPod's instructions on how to disconnect the dock connector from the USB adapter cable.

*: The displayed message may vary on models or versions. On some models, there is no message to disconnect.

If you reconnect the same iPod, the system may begin playing where it left off, depending on what mode the iPod is in when it is reconnected.

When you disconnect the iPod while it is playing, the display shows "USB NO DATA."

iPod® Error Messages (U.S. LX model and EX model without navigation system)

If you see an error message on the audio display while playing an iPod, find the solution in the chart to the right. If you cannot clear the error message, take your vehicle to your dealer.

Error Message	Cause	Solution
USB ERROR	USB ROM Error	There is a problem with the USB adapter unit.
BAD USB DEVICE PLEASE CHECK OWNERS MANUAL	Appears when an incompatible device is connected	Disconnect the device. Then, turn the audio system off, and turn it on again. Do not reconnect the device that caused the error.
iPod NO SONG	No files in iPod	Appears when the iPod is empty. Store some files in the iPod.
UNSUPPORTED VER.	Use of unsupported iPod	Appears when an unsupported iPod is connected. See page 198 for the specification information for iPods. If it appears when a supported iPod is connected, update the iPod software to the newer version.
CONNECT RETRY	Recognition failure of iPod	Appears when the system dose not acknowledge the iPod. Reconnect the iPod.

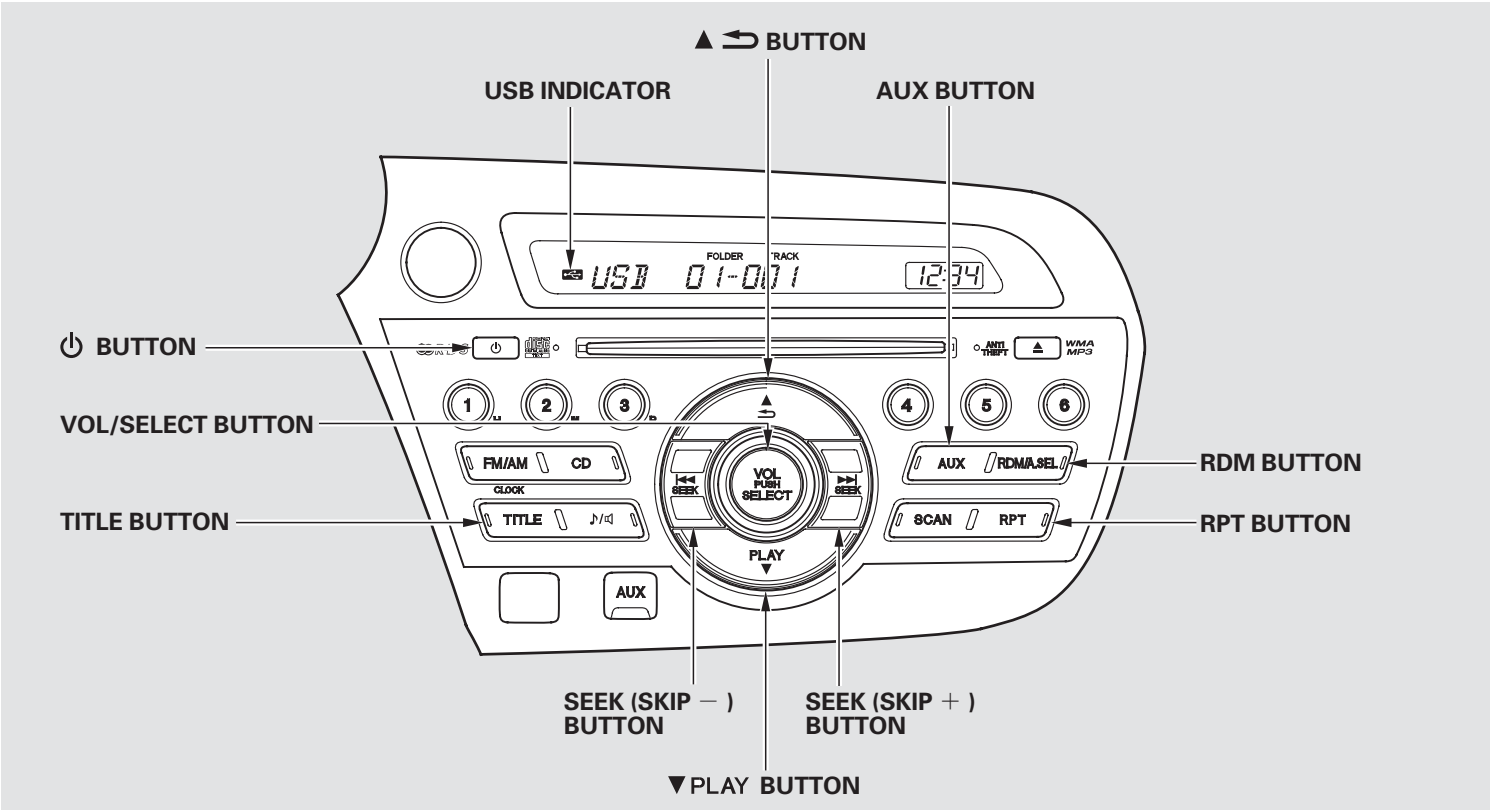
▲ ⮌ BUTTON
USB INDICATOR
AUX BUTTON
⏻ BUTTON
VOL/SELECT BUTTON
TITLE BUTTON
RDM BUTTON
RPT BUTTON
SEEK (SKIP −) BUTTON
SEEK (SKIP +) BUTTON
▼PLAY BUTTON
FOLDER
TRACK
USB 01-011
12:34
FM/AM
CD
CLOCK
TITLE
AUX
RDM/A.SEL
SCAN
RPT
SEEK
VOL PUSH SELECT
PLAY
ANTI THEFT
WMA MP3

To Play a USB Flash Memory Device

This audio system can operate the audio files on a USB flash memory device with the same controls used for the in-dash disc player. To play a USB flash memory device, connect it to the USB adapter cable in the console compartment, then press the AUX button.

The audio system reads and plays the audio files on the USB flash memory device in MP3, WMA or AAC* formats. Depending on the format, the display shows MP3, WMA or AAC when a USB flash memory device is playing.

*: Only AAC format files recorded with iTunes are playable on this audio unit.

The recommended USB flash memory devices are 256 MB or higher, and formatted with the FAT file system. Some digital audio players may be compatible as well. Some USB flash memory devices (such as devices with security lock-out features, etc.) will not work in this audio unit.

CONTINUED

NOTE:

- Do not use a device such as a card reader or hard drive as the device or your files may be damaged.
- Do not connect your USB flash memory device using a hub.
- Do not use an extension cable to the USB adapter cable equipped with your vehicle.
- Do not keep a USB flash memory device in the vehicle. Direct sunlight and high heat will damage it.
- We recommend backing up your data before playing a USB flash memory device.
- Some devices cannot be powered or charged via the USB adapter. If this is the case, use the accessory adapter to supply power to your device.
- Depending on the type and number of files, it may take some time before they begin to play.
- Depending on the software the files were made with, it may not be possible to play some files, or display some text data.
- Depending on the type of encoding and writing software used, there may be cases where character information does not display properly.

Connecting a USB Flash Memory Device

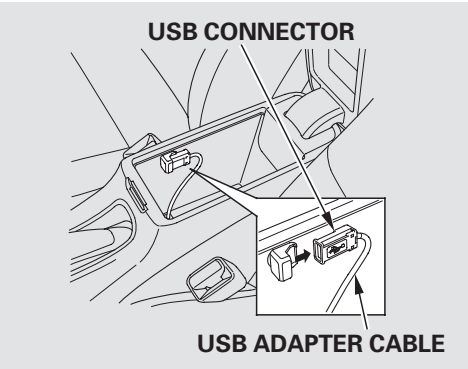

1. Unclip the USB connector by pivoting it, and pull out the USB adapter cable in the console compartment.

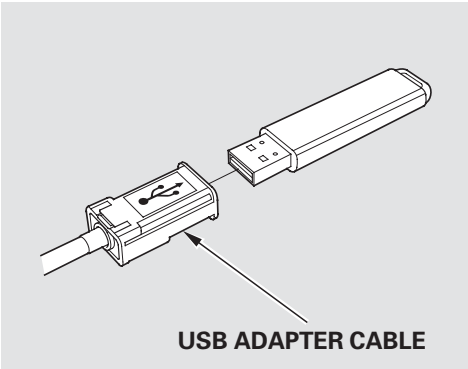

2. Connect the USB flash memory device to the USB connector correctly and securely.

When the USB flash memory device is connected, the USB indicator is shown in the display.

CONTINUED

Text Data Display Function
Each time you press the TITLE button, the display mode shows you in sequence, the folder name, the file name, the artist name, the album name, the song name, or name off (which turns off the text display).

The display shows up to 16 characters of the selected data. If the text data has more than 16 characters, you will see the first 15 characters and the > indicator in the display. Press and hold the TITLE button until the next 16 characters are shown.

FOLDER SELECTION — To select a different folder, press the ▲ button or ▼PLAY button. Press the ▲ button to skip to the next folder, and press the ▼PLAY button to skip to the beginning of the previous folder.

To Change or Select Files
Use the SKIP button while a USB flash memory device is playing to change files.

SKIP — Each time you press the SEEK (SKIP +) button, the system skips forward to the beginning of the next file. Press the SEEK (SKIP −) button, to skip backward to the beginning of the current file. Press it again to skip to the beginning of the previous file.

To move rapidly within a file, press and hold either side (SEEK or SEEK) of the SKIP button.

To Select a File from Folder and File Lists

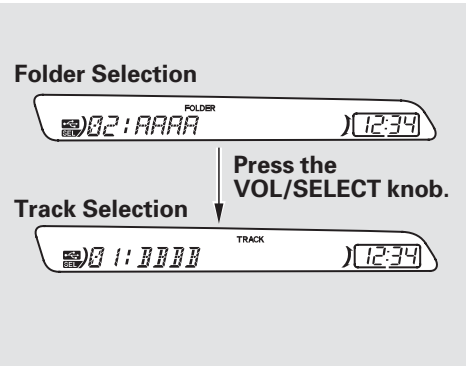

You can also select a folder or file by using the VOL/SELECT knob. Push the VOL/SELECT knob to switch the display to the folder or file list, then turn the VOL/SELECT knob to select a folder or file. Press the VOL/SELECT knob to set your selection.

Pressing the ▲ ⮌ button goes back to the previous display and pressing the TITLE button cancels this setting mode.

To Select Repeat, Random or Scan Mode:

You can select any type of repeat, random and scan modes by using the RPT button, RDM button, or SCAN button.

CONTINUED

REPEAT — This feature continuously plays a file. To activate the repeat feature, press the RPT button. You will see “RPT” in the display. To turn it off, press and hold the RPT button.

FOLDER REPEAT — This feature replays all the files in the selected folder in the order they are stored. To activate the folder repeat feature, press the RPT button repeatedly. You will see “F-RPT” in the display. To turn it off, press and hold the RPT button.

Each time you press and release the RPT button, the mode changes from file repeat to folder repeat, then to normal play.

RANDOM — This feature plays all the files in random order. To activate the track random feature, press the RDM button. You will see “RDM” in the display. To turn it off, press and hold the RDM button.

FOLDER RANDOM — This feature plays the files in the current folder in random order. To activate the folder random feature, press the RDM button repeatedly. You will see “F-RDM” in the display. To turn it off, press and hold the RDM button.

Each time you press the RDM button, the mode changes from track random, play to folder random play, then to normal play.

SCAN — This feature samples all files in the current folder in the order they are stored. To activate the scan feature, press the SCAN button. You will see “SCAN” in the display. You will get a 10 second sampling of each file in the folder. Press and hold the SCAN button to get out of the scan mode and play the last file sampled.

FOLDER SCAN — This feature samples the first file in each folder in the order they are stored. To activate the folder scan feature, press the SCAN button repeatedly. You will see “F-SCAN” in the display. You will get a 10 second sampling of the first file in each folder. Press and hold the SCAN button to get out of the folder scan mode and play the last file sampled.

Each time you press and release the SCAN button, the mode changes from file scan to folder scan, then to normal play.

To Stop Playing a USB Flash Memory Device

To play the radio when a USB flash memory device is playing, press the FM/AM button. If a disc is in the audio unit, press the CD button to play the disc.

Disconnecting a USB Flash Memory Device

You can disconnect the USB flash memory device at any time even if the USB mode is selected on the audio system. Always follow the USB flash memory device's instructions when you remove it.

When you disconnect the USB flash memory device while it is playing, the display shows "USB NO DATA."

If you reconnect the same USB flash memory device, the system will begin playing where it left off.

USB Flash Memory Device Error Messages (U.S. LX model and EX model without navigation system)

If you see an error message on the audio display while playing a USB flash memory device, find the solution in the chart to the right. If you cannot clear the error message, take your vehicle to your dealer.

Error Message	Cause	Solution
USB ERROR	USB ROM Error	There is a problem with the USB adapter unit.
BAD USB DEVICE PLEASE CHECK OWNERS MANUAL	Appears when an incompatible device is connected	Disconnect the device. Then, turn the audio system off, and turn it on again. Do not reconnect the device that caused the error.
UNPLAYABLE FILE	Use of unsupported files	Appears when the files in the USB flash memory device are DRM or an unsupported format. This error message appears for about 3 seconds, then plays the next song.
USB NO SONG	No files in USB flash memory device	Appears when the USB flash memory device is empty or there are no MP3, WMA, or AAC files in the USB flash memory device. Save some MP3, WMA, or AAC files in the USB flash memory device.
UNSUPPORTED	Use of unsupported USB flash memory device	Appears when an unsupported device is connected. See page 205 for the specification information for the USB flash memory device. If it appears when the supported device is connected, reconnect the device.

Radio Frequencies
The radio can receive the complete AM and FM bands.
Those bands cover these frequencies:

AM band: 530 to 1,710 kHz
FM band: 87.7 to 107.9 MHz

Radio stations on the AM band are assigned frequencies at least 10 kHz apart (530, 540, 550). Stations on the FM band are assigned frequencies at least 0.2 MHz apart (87.9, 88.1, 88.3).

Stations must use these exact frequencies. It is fairly common for stations to round-off the frequency in their advertising, so your radio could display a frequency of 100.9 even though the announcer may identify the station as “FM101.”

Radio Reception
How well the radio receives stations is dependent on many factors, such as the distance from the station’s transmitter, nearby large objects, and atmospheric conditions.

A radio station’s signal gets weaker as you get farther away from its transmitter. If you are listening to an AM station, you will notice the sound volume becoming weaker, and the station drifting in and out. If you are listening to an FM station, you will see the stereo indicator flickering off and on as the signal weakens. Eventually, the stereo indicator will go off and the sound will fade completely as you get out of range of the station’s signal.

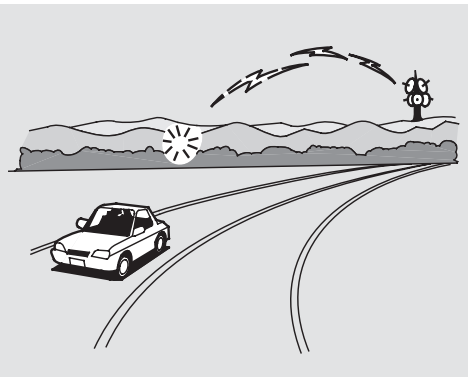

Driving very near the transmitter of a station that is broadcasting on a frequency close to the frequency of the station you are listening to can also affect your radio’s reception. You may temporarily hear both stations, or hear only the station you are close to.

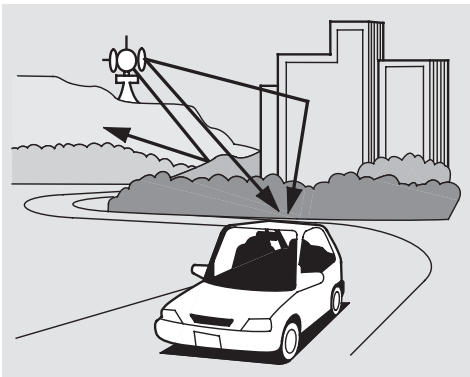

Radio signals, especially on the FM band, are deflected by large objects such as buildings and hills. Your radio then receives both the direct signal from the station's transmitter, and the deflected signal. This causes the sound to distort or flutter. This is a main cause of poor radio reception in city driving.

Radio reception can be affected by atmospheric conditions such as thunderstorms, high humidity, and even sunspots. You may be able to receive a distant radio station one day and not receive it the next day because of a change in conditions.

Electrical interference from passing vehicles and stationary sources can cause temporary reception problems.

As required by the FCC:
Changes or modifications not expressly approved by the party responsible for compliance could void the user's authority to operate the equipment.

Protecting Your Discs

General Information

- When using CD-R or CD-RW discs, use only high quality discs labeled for audio use.
- When recording a CD-R or CD-RW, the recording must be closed for it to be used by the system.
- Play only standard round discs. Odd-shaped discs may jam in the drive or cause other problems.
- Handle your discs properly to prevent damage and skipping.

NOTICE

Do not use discs with adhesive labels. The label can curl up and cause the disc to jam in the unit.

Protecting Discs

When a disc is not being played, store it in its case to protect it from dust and other contamination. To prevent warpage, keep discs out of direct sunlight and extreme heat.

To clean a disc, use a clean soft cloth. Wipe across the disc from the center to the outside edge.

A new disc may be rough on the inner and outer edges. The small plastic pieces causing this roughness can flake off and fall on the recording surface of the disc, causing skipping or other problems. Remove these pieces by rubbing the inner and outer edges with the side of a pencil or pen.

Never try to insert foreign objects in the disc player.

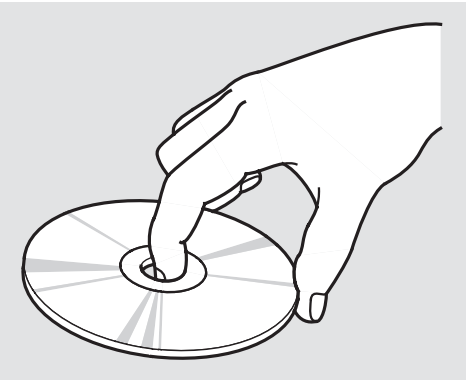

Handle a disc by its edges; never touch either surface. Do not place stabilizer rings or labels on the disc. These, along with contamination from finger prints, liquids, and felt-tip pens, can cause the disc to not play properly, or possibly jam in the drive.

Additional Information on Recommended Discs
The in-dash disc player/changer has a sophisticated and delicate mechanism. If you insert a damaged disc as indicated in this section, it may become stuck inside and damage the audio unit.

Examples of these discs are shown to the right:

1. Bubbled, wrinkled, labeled, and excessively thick discs

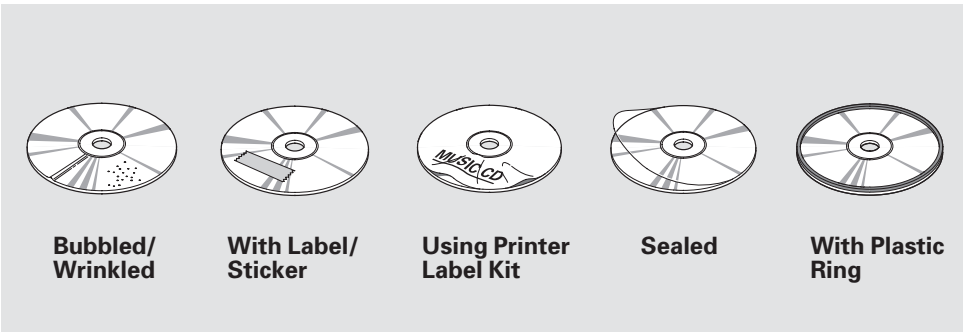

2. Damaged discs

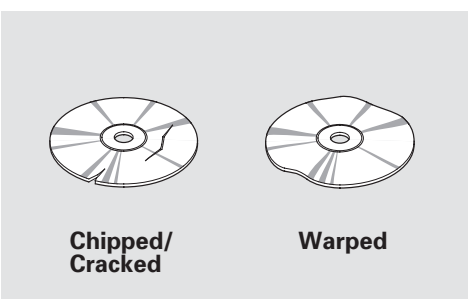

3. Poor quality discs

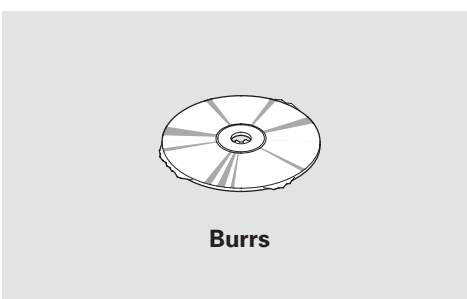

CONTINUED

4. Small, irregular shaped discs

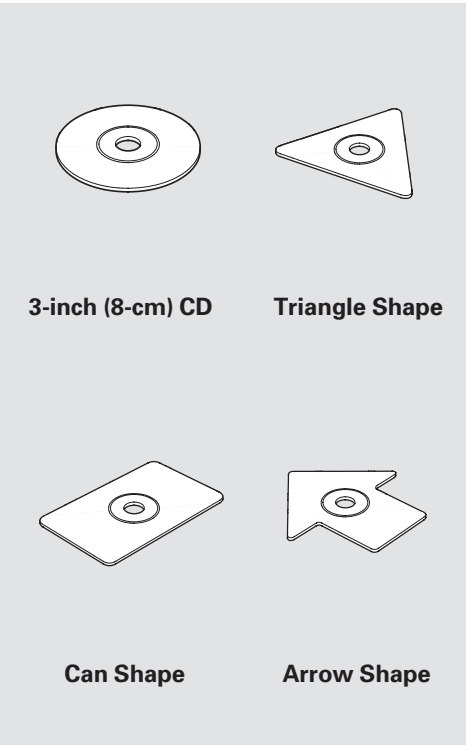

5. Discs with scratches, dirty discs

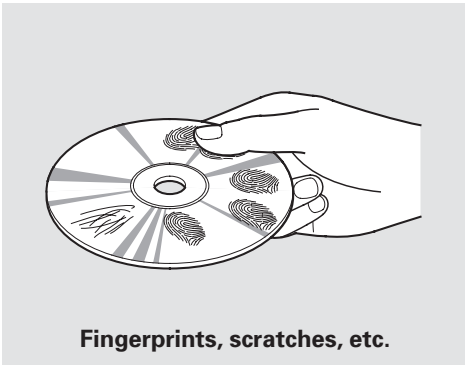

- CD-R or CD-RW may not play due to the recording conditions.
- Scratches and fingerprints on the discs may cause the sound to skip.

- Recommended discs are printed with the following logo.

- Audio unit may not play the following formats.

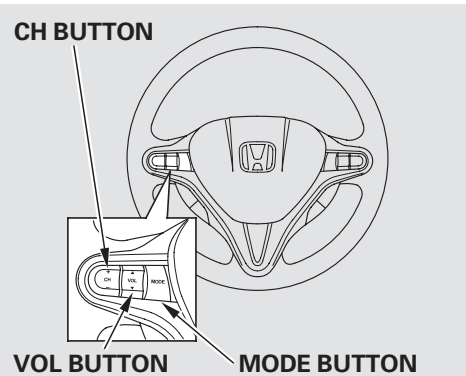

On U.S. LX model and EX models
Three controls for the audio system are mounted in the steering wheel hub. These let you control basic functions without removing your hand from the wheel.

The VOL button adjusts the volume up (▲) or down (▼). Press the top or bottom of the button and hold it until the desired volume is reached, then release it.

The MODE button changes the mode. Pressing the button repeatedly selects FM1, FM2, AM, disc or a PC card (if a disc or a PC card is loaded), or an audio unit connected to the auxiliary input jack or the USB adapter cable.

If you are listening to the radio, use the CH button to change stations. Each time you press the top (+) of the button, the system goes to the next preset station on the band you are listening to. Press the bottom (−) to go back to the previous station. If you press and hold the CH button (+) or (−), the system goes into the seek mode. It finds a station with a strong signal.

If you are playing a disc, iPod or USB flash memory device, the system skips to the beginning of the next track (file in MP3, WMA or AAC format) each time you press the top (+) of the CH button. Press the bottom (−) to return to the beginning of the current track/file. Press it twice to return to the previous track/file.

You will see the track/file number and the elapsed time. If the disc has text data or is compressed in MP3 or WMA, you can also see any other information (track title, file name, folder name, etc.).

CONTINUED

In MP3 or WMA mode, you can use the seek function to select folders. Press and hold the top (+) of the CH button until you hear a beep to skip forward to the first file of the next folder. Press the bottom (−) to skip backward to the previous folder.

If you are playing a PC card, press the top (+) of the CH button to advance to the next file. Press the bottom (−) to go back to the previous file.

Auxiliary Input Jack

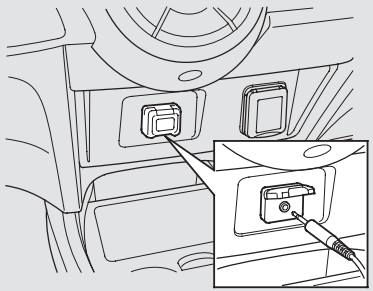

On Insight model and EX model with navigation system

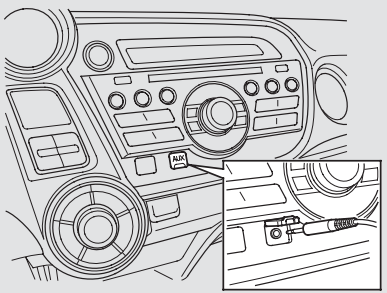

On LX model and EX model without navigation system

Your vehicle has the auxiliary input jack on the front panel. The system will accept auxiliary input from standard audio accessories using a 1/8 inch (3.5 mm) stereo miniplug.

When a compatible audio unit is connected to the jack, press the CD/AUX (on vehicles with navigation system) or AUX (on vehicles without navigation system) button to select it.

If your vehicle's battery is disconnected or goes dead, the audio system disables itself. If this happens, you will see "ENTER CODE" in the frequency display next time you turn on the system. Use the preset bars (icons on models with navigation system) to enter the five-digit code. The code is on the Anti-theft Identification Card included in your owner's manual kit. When it is entered correctly, the radio will start playing.

The Anti-theft Identification Card also lists your audio serial number. It is best to store the card in a safe place at home. In addition, you should write the audio system's serial number in this owner's manual.

If you make a mistake entering the code, do not start over; complete the five-digit sequence, then enter the correct code. You have ten tries to enter the correct code. If you are unsuccessful in ten attempts, you must then leave the system on for one hour before trying again.

The system will retain your AM and FM presets even if power is disconnected.

U.S. owners
We recommend that you register the security code at Owner Link (owners.honda.com.) If you lose the Anti-theft Identification Card before registering the code at Owner Link, you must obtain the code from your dealer or *https://radio-navicode.honda.com/*. To do this, you will need the audio system's serial number. If you do not have the serial number with you, ask your dealer or go to *https://radio-navicode.honda.com/* for information on how to retrieve it.

Canadian owners
If you lose the Anti-theft Identification Card, you must obtain the code from your dealer. To do this, you will need the audio system's serial number. If you do not have the serial number with you, ask your dealer how to retrieve it.

On models with navigation system
You need to enter a separate code for the navigation system to reactivate. The Anti-theft Card also lists the navigation system's security code and serial number. Follow the same procedure to retrieve the serial number and obtain the code, and read the navigation system manual for details.

Setting the Clock (Models without navigation system)

To set the time, press the CLOCK button until you hear a beep. The displayed time begins to blink.

Change the hours by pressing the H (hour) button until the numbers advance to the desired time. Change the minutes by pressing the M (minute) button until the numbers advance to the desired time.

Press the CLOCK button again to enter the set time.

You can quickly set the time to the nearest hour. If the displayed time is before the half hour, press and hold the CLOCK button, then press the R (reset) button to set the time back to the previous hour. If the displayed time is after the half hour, the same procedure sets the time forward to the beginning of the next hour.

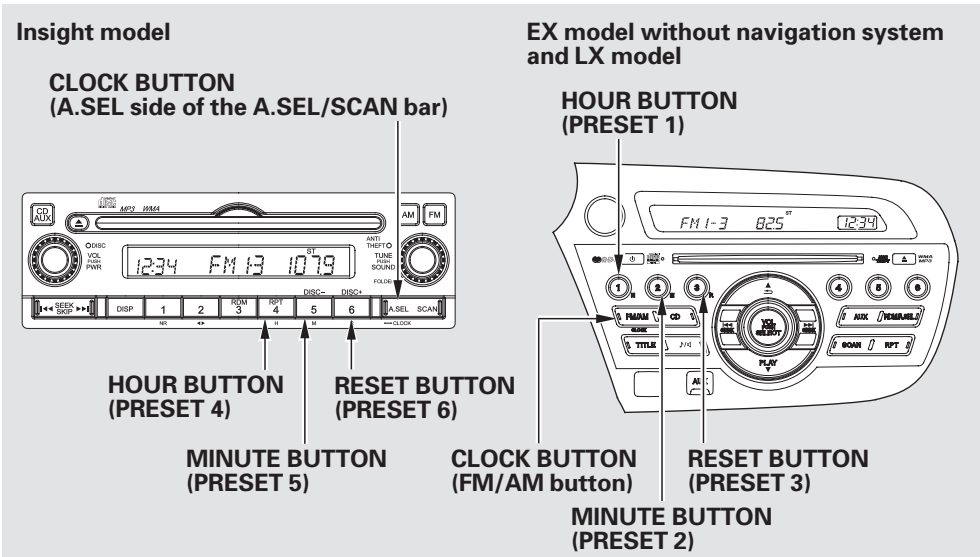

For example: 1:06 will reset to 1:00
1:52 will reset to 2:00

When you set the time, the ignition switch must be ACCESSORY (I) or ON (II) position.

On LX and EX models
The security system helps to protect your vehicle and valuables from theft. The horn sounds and a combination of headlights, parking lights, side marker lights and taillights flashes if someone attempts to break into your vehicle or remove the audio unit. This alarm continues for two minutes, then the system resets. To deactivate the system before the two minutes have elapsed, unlock the driver's door with the key or the remote transmitter.
The security system sets automatically 15 seconds after you lock the doors, hood, and the hatch. For the system to activate, you must lock the doors and the hatch from the outside with the key, or use driver's lock tab, door lock master switch, or remote transmitter. The security system indicator on the instrument panel starts blinking immediately to show you the system is setting itself.

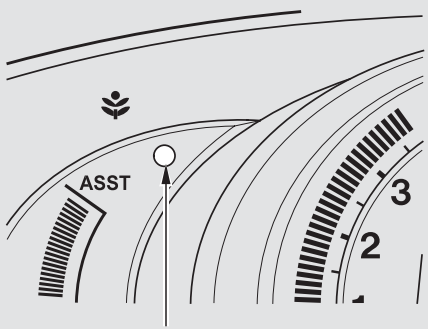

SECURITY SYSTEM INDICATOR

Once the security system is sets, opening any door, the hatch, or the hood without using the key or the remote transmitter, will cause the alarm to activate. It also activates if the audio unit is removed from the dashboard or the wiring is cut.

The alarm also activates if a passenger inside the locked vehicle turns the ignition switch on.

The security system does not set if the hood, hatch, or any door is not fully closed. If the system will not set, check the door and hatch open indicator on the instrument panel and multi-information display (see page 12) to see if the doors and hatch are fully closed. Since it is not part of the monitor display, manually check the hood.

NOTE: To see if the system is set after you exit the vehicle, press the LOCK button on the remote transmitter within five seconds. If the system is set, the horn will beep once.

Do not attempt to alter this system or add other devices to it.

On LX and EX models
Cruise control allows you to maintain a set speed above 25 mph (40 km/h) without keeping your foot on the accelerator pedal. It should be used for cruising on straight, open highways. It is not recommended for city driving, winding roads, slippery roads, heavy rain, or bad weather.

⚠ WARNING

Improper use of the cruise control can lead to a crash.

Use the cruise control only when traveling on open highways in good weather.

Using the Cruise Control

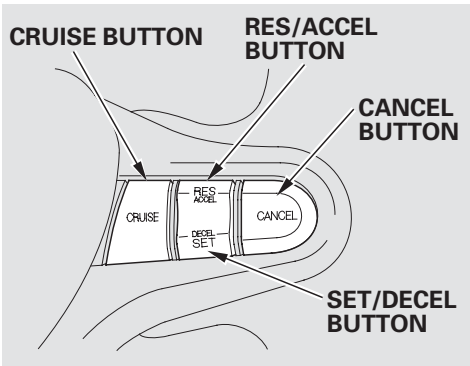

1. Push the CRUISE button on the steering wheel. The CRUISE MAIN indicator on the instrument panel comes on.

2. Accelerate to the desired cruising speed above 25 mph (40 km/h).

3. Press and release the SET/DECEL button on the steering wheel. The CRUISE CONTROL indicator on the instrument panel comes on to show the system is now activated.

Cruise control may not hold the set speed when you are going up and down hills. If your vehicle speed increases going down a hill, use the brakes to slow down. This will cancel the cruise control. To resume the set speed, press the RES/ACCEL button. The CRUISE CONTROL indicator on the instrument panel will come back on.

Changing the Set Speed
You can increase the set cruising speed in any of these ways:

- Press and hold the RES/ACCEL button. When you reach the desired cruising speed, release the button.
- To increase your speed in very small amounts, tap the RES/ACCEL button. Each time you do this, the vehicle will speed up about 1 mph (1.6 km/h).
- Push on the accelerator pedal. Accelerate to the desired cruising speed, then press the SET/DECEL button.

You can decrease the set cruising speed in any of these ways:

- Press and hold the SET/DECEL button. Release the button when you reach the desired speed.
- To slow down in very small amounts, tap the SET/DECEL button. Each time you do this, your vehicle will slow down about 1 mph (1.6 km/h).
- Tap the brake pedal lightly with your foot. The CRUISE CONTROL indicator on the instrument panel will go out. When the vehicle slows to the desired speed, press the SET/DECEL button.

Even with the cruise control turned on, you can still use the accelerator pedal to speed up for passing. After completing the pass, take your foot off the accelerator pedal. The vehicle will return to the set cruising speed.

Resting your foot on the brake pedal causes cruise control to cancel.

Canceling Cruise Control

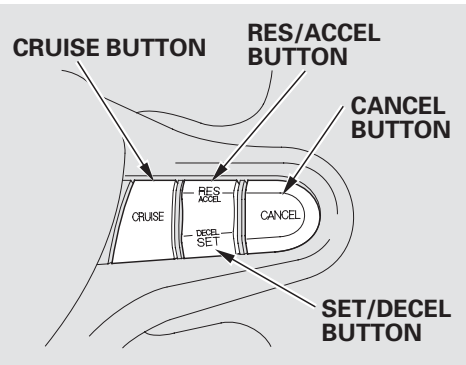

You can cancel cruise control in any of these ways:

- Tap the brake pedal.
- Push the CANCEL button on the steering wheel.
- Push the CRUISE button on the steering wheel.

EX models only
Tapping either of the paddle shifters shifts the speed up or down, but does not cancel the cruise control. For more information on driving with paddle shifters, see page 278.

Resuming the Set Speed

When you push the CANCEL button, or tap the brake pedal, the system will remember the previously-set cruising speed. To return to that speed, accelerate to above 25 mph (40 km/h) and then press and release the RES/ACCEL button. The CRUISE CONTROL indicator comes on. The vehicle will accelerate to the same cruising speed as before.

Pressing the CRUISE button turns the system off and erases the previous cruising speed.

Bluetooth® HandsFreeLink® (HFL) allows you to place and receive phone calls using voice commands, without handling your cell phone.

To use HFL, you need a Bluetooth-compatible cell phone. For a list of compatible phones, pairing procedures, and special feature capabilities:

In the U.S., visit *handsfreelink.honda.com* or call (888) 528-7876.

In Canada, visit *www.handsfreelink.ca,* or call (888) 528-7876.

Using HFL

HFL Buttons

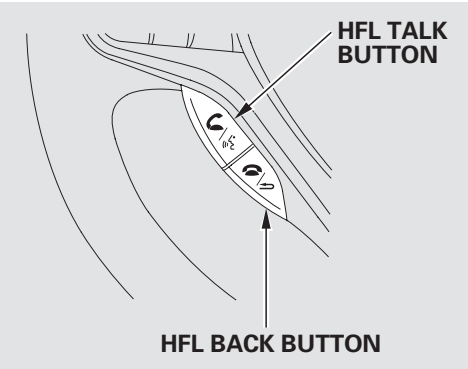

HFL Talk button — Press and release to give a command or answer a call.

HFL Back button — Press and release to end a call, go back to the previous command, or cancel the command.

CONTINUED

Voice Control Tips

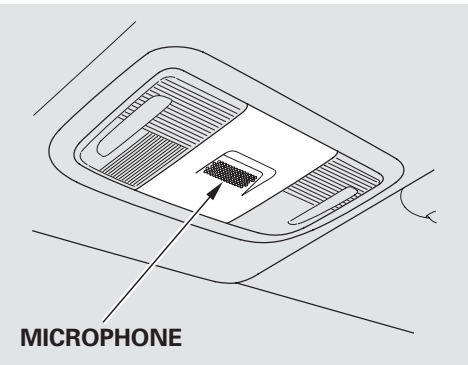

- Air or wind noise from the dashboard and side vents and all windows may interfere with the microphone. Adjust or close them as necessary.

- Press and release the HFL Talk button each time you want to make a command. After the beep, speak in a clear, natural tone.

- Try to reduce all background noise. If the microphone picks up voices other than yours, commands may be misinterpreted.

- Many commands can be spoken together. For example, you can say “Call 123-456-# # # #” or “Dial Peter.”

- To change the volume level of HFL, use the audio system volume knob or the steering wheel volume controls.

Help Features

- To hear general HFL information, including help on pairing a phone or setting up the system, say "Tutorial."
- For help at any time, including a list of available commands, say "Hands free help."

Information Display

As an incoming call notification, you will see the following display:

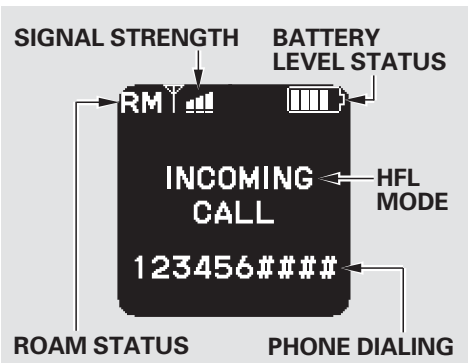

The Bluetooth icon will also appear on the display when a phone is linked.

Some phones may send battery, signal strength, and roaming status information to HFL.

CONTINUED

How to Use HFL

The ignition switch must be in the ACCESSORY (I) or ON (II) position.

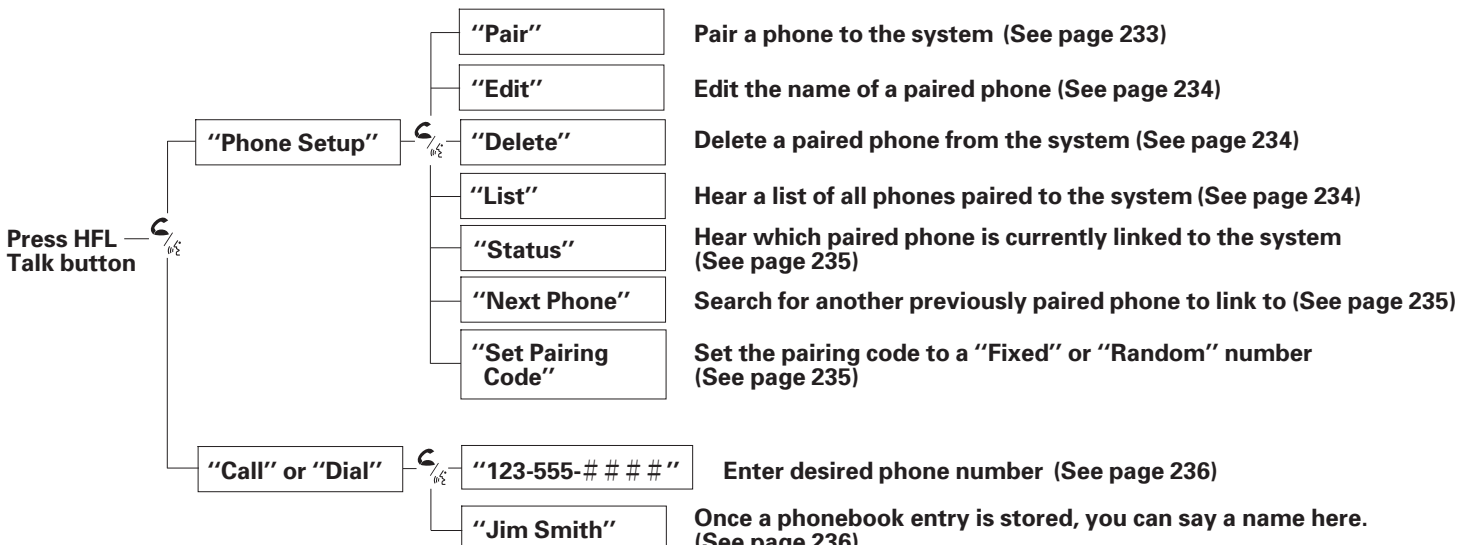

Press and release the HFL Talk button each time you give a command.

Press HFL Talk button

- **"Redial"** — Redial the last number called (See page 237)
- **"Transfer"** — Transfer a call from HFL to your phone, or from your phone to HFL (See page 238)
- **"Mute"** — Mute your voice to the person at the other end of the call (See page 238)
- **"Send"** — Send numbers or names during a call (See page 238)
- **"Phonebook"**
  - **"Store"** — Store a phonebook entry (See page 239)
  - **"Edit"** — Edit the number of an existing phonebook entry (See page 239)
  - **"Delete"** — Delete a phonebook entry (See page 240)
  - **"Receive Contact"** — If your phone supports this function, use this to transfer contacts from your phone to HFL (See page 240)
  - **"List"** — Hear a list of all stored phonebook entries (See page 240)

Press and release the HFL Talk button each time you give a command.

CONTINUED

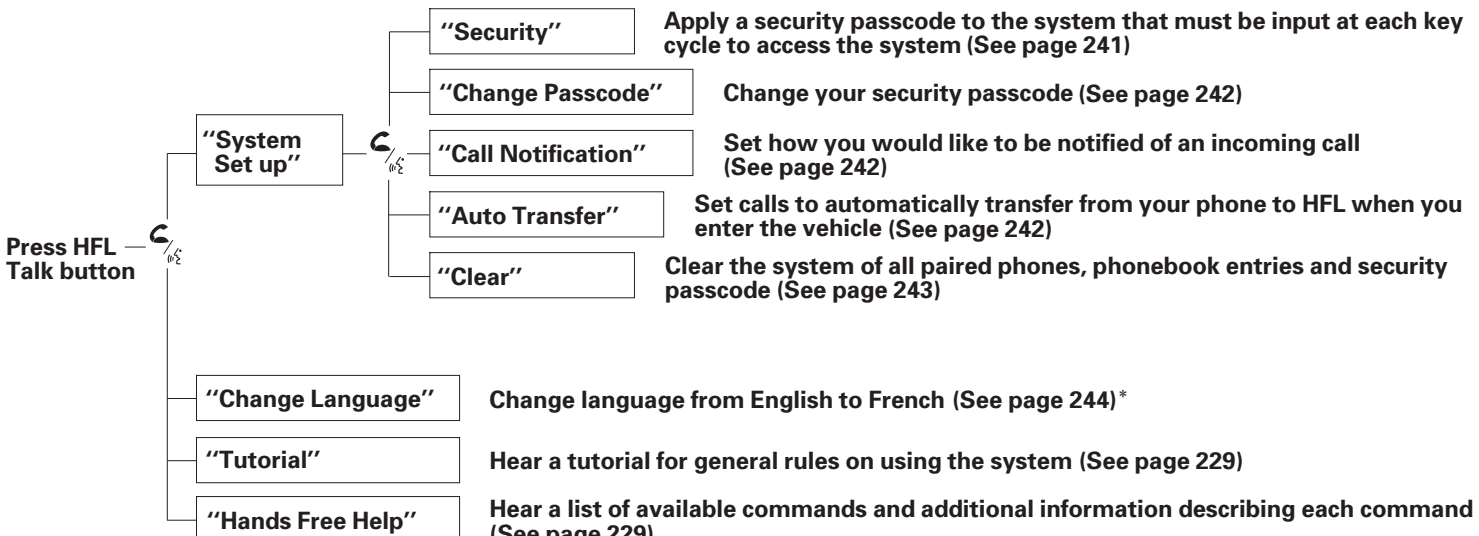

Press and release the HFL Talk button each time you give a command.

* : Canadian models

To use HFL, you need to pair your Bluetooth-compatible cell phone to the system.

Phone Setup
This command group is available for paired cell phones.

Phone pairing tips

- You cannot pair your phone while the vehicle is moving.
- Your phone must be in discovery or search mode to pair. Refer to your phone's manual.
- Up to six phones can be paired.
- Your phone's battery may drain faster when it is paired to HFL.
- If after three minutes your phone is not ready to pair or a phone is not found, the system will time out and return to idle.

To pair a cell phone:

1. Press and release the HFL Talk button. If you are pairing a phone for the first time, HFL will give you information about the pairing process. If it is not the first phone you are pairing, say "**Phone setup**" and say "**Pair**."
2. Follow the HFL prompts and put your phone in discovery or search mode. HFL will give you a 4-digit pairing code and begin searching for your phone.
3. When your phone finds a Bluetooth device, select HFL from the options and enter the 4-digit code from the previous step.
4. Follow the HFL prompts and name the newly paired phone.

CONTINUED

To rename a paired phone:
Press and release the HFL Talk button before a command.

1. Say "**Phone setup**."

2. Say "**Edit**" after the prompts.

3. If there is more than one phone paired to the system, HFL will ask you which phone's name you want to change. Follow the HFL prompts and rename the phone.

To delete a paired phone:
Press and release the HFL Talk button before a command.

1. Say "**Phone setup**."

2. Say "**Delete**" after the prompts.

3. HFL will ask you which phone you want to delete. Follow the HFL prompts to continue with the deletion.

To hear the names of all paired phones:
Press and release the HFL Talk button before a command.

1. Say "**Phone setup**."

2. Say "**List**" after the prompts.

3. HFL will read out all the paired phone's names.

To hear which paired phone is currently linked:
Press and release the HFL Talk button before a command.

1. Say "**Phone setup**."

2. Say "**Status**" after the prompts.

3. HFL will tell you which phone is linked to the system.

To change from the currently linked phone to another paired phone:
Press and release the HFL Talk button before a command.

1. Say "**Phone setup**."

2. Say "**Next phone**" after the prompts.

3. HFL disconnects the linked phone and searches for another paired phone.

4. Once another phone is found, it is linked to the system. HFL will inform you which phone is now linked.

If no other phones are found or paired, HFL will inform you that the original phone is linked again.

To change the pairing code setting:
Press and release the HFL Talk button before a command.

1. Say "**Phone setup**."

2. Say "**Set pairing code**" after the prompts.

3. If you want HFL to create a random code each time you pair a phone, say "**Random**." If you want to choose your own 4-digit code to be used each time, say "**Fixed**" and follow the HFL prompts.

Making a Call
You can make calls using a name in the HFL phonebook or any phone number. You can also redial the last number called.

HFL uses a Class 2 Bluetooth, which means, the maximum range between your phone and vehicle is 30 feet (10 meters).

During a call, HFL allows you to talk up to 30 minutes after you remove the key from the ignition switch. However, this may weaken the vehicle's battery.

To make a call using a name in the HFL phonebook:
Press and release the HFL Talk button before a command.

1. Say "**Call**" or "**Dial**."
2. Follow the HFL prompts and say the name stored in the HFL phonebook that you want to call.
3. Follow the HFL prompts to confirm the name and make the call.

To make a call using a phone number:
Press and release the HFL Talk button before a command.

1. Say "**Call**" or "**Dial**."
2. Follow the HFL prompts and say the phone number you want to dial.
3. Follow the HFL prompts to confirm the number and say "**Call**" or "**Dial**."

Once connected, you will hear the person you called through the audio speakers.

To redial the last number called by HFL:
Press and release the HFL Talk button and say "**Redial**."

Receiving a Call
When you receive a call, an incoming call notification (if activated) will play and interrupt the audio system if it is on.

Press the HFL Talk button to answer the call, or the HFL Back button to hang up.

Call Waiting
If your phone has Call Waiting, press and release the HFL Talk button to put the original call on hold and answer the incoming call.

To return to the original call, press the HFL Talk button again. If you don't want to answer the incoming call, disregard it and continue with your original call. If you want to hang up the original call and answer the new call, press the HFL Back button.

Transferring a Call
You can transfer a call from HFL to your phone, or from your phone to HFL.

Press and release the HFL Talk button and say "**Transfer**."

Muting a Call
You can mute your voice to the person you are talking to during a call.

To mute your voice during a call, press and release the HFL Talk button and say "**Mute**."

To unmute your voice, press and release the HFL Talk button and say "**Mute**" again.

Send Numbers or Names During a Call
HFL allows you to send numbers or names during a call. This is useful when you call a menu-driven phone system.

To send a name or number during a call:
Press and release the HFL Talk button before a command.

1. Say "**Send**."
2. Follow the HFL prompts and say the name or number you want to send.
3. Follow the HFL prompts to send the tones and continue the call.

NOTE: To send a pound (#), say "pound." To send a star (*), say "star."

Phonebook
You can store up to 50 names with their associated numbers in HFL. The numbers you store can be not only phone numbers but other types, such as account numbers or passwords, which can be sent during a menu-driven call.

To store a phonebook entry:
Press and release the HFL Talk button before a command.

1. Say "**Phonebook**."
2. Say "**Store**" after the prompts.
3. Say a name you want to list as your phonebook entry.
4. Say the number you want to store for the name entry.
5. Follow the HFL prompts and say "**Enter**" to store the entry.

NOTE:
- Avoid using duplicate name entries.
- Avoid using "home" as a name entry.
- It is easier for HFL to recognize a multisyllabic or longer name. For example, use "Peter" instead of "Pete," or "John Smith" instead of "John."

To edit the number stored in a name:
Press and release the HFL Talk button before a command.

1. Say "**Phonebook**."
2. Say "**Edit**" after the prompts.
3. Follow the HFL prompts and say the name entry you want to edit.
4. When asked, say the new number for that name.
5. Follow the HFL prompts to complete the edit.

CONTINUED

To delete a name:
Press and release the HFL Talk button before a command.

1. Say "**Phonebook**."
2. Say "**Delete**" after the prompts.
3. Say the name you want to delete and follow the HFL prompts to complete the deletion.

To list all names in the phonebook:
Press and release the HFL Talk button before a command.

1. Say "**Phonebook**."
2. Say "**List**" after the prompts.
3. HFL begins reading the names in the order they were stored.
4. If you hear a name you want to call, immediately press the HFL Talk button and say "**Call**."

To store a specific phone number from your cell phone directly to the HFL phonebook (available on some phones):
Press and release the HFL Talk button before a command.

1. Say "**Phonebook**."
2. Say "**Receive contact**" after the prompts.
3. Follow the HFL prompts, select a number from your cell phone, and send it to HFL.
4. Follow the HFL prompts and name the number, or say "**Discard**" if it is not the number you want to store.
5. Follow the HFL prompts if you want to store another number.

System Setup
This command group allows you to change or customize HFL basic settings.

To set a 4-digit passcode to lock the HFL system for security purposes:
Press and release the HFL Talk button before a command.

1. Say "**System setup**."
2. Say "**Security**" after the prompts.
3. Follow the HFL prompts and say the 4-digit passcode you want to set.
4. Follow the HFL prompts to confirm the number.

NOTE: Once a passcode is set, you will need to enter it to use HFL each time you start the vehicle. If you forget the code, your dealer will have to reset it for you, or you will have to clear the entire system (see page 243).

CONTINUED

To change your security passcode:
Press and release the HFL Talk button before a command.

1. Say "**System setup**."
2. Say "**Change passcode**" after the prompts.
3. Follow the HFL prompts and say the new 4-digit passcode.
4. Follow the HFL prompts to confirm the number.

***To select either a ring tone or a prompt as the incoming call notification**:**
Press and release the HFL Talk button before a command.

1. Say "**System setup**."
2. Say "**Call notification**" after the prompts.
3. Follow the HFL prompts and say "**Ring tone**" or "**Prompt**." You can also say "**Off**" for no audible incoming call notification.

* : The default setting is a ring tone.

To activate or deactivate the auto transfer function:
If you get into the vehicle while you are on the phone, the call can be automatically transferred to HFL with the ignition switch in the ACCESSORY (I) or ON (II) position.

Press and release the HFL Talk button before a command.

1. Say "**System setup**."
2. Say "**Auto transfer**" after the prompts.
3. HFL will let you know if auto transfer is on or off, depending on the previous setting. Follow the HFL prompts to change the setting.

To clear the system:
This operation clears the passcodes, paired phones, all names in the HFL phonebook, and all imported phonebook data.

Press and release the HFL Talk button before a command.

1. Say "**System setup**."

2. Say "**Clear**" after the prompts.

3. Follow the HFL prompts to continue to complete the clearing procedure.

You can also clear the system when you have forgotten the passcode and cannot access HFL. When HFL asks you for the passcode, say "**System clear**." Paired phones, all names in the HFL phonebook and all imported phonebook data will be lost.

Quick Language Selection
Canadian models only
To quickly change the language:
Press and release the HFL Talk button before a command.

1. Say the language you want to change to in that language.

2. Follow the HFL prompts.

Change Language
Canadian models only
To change the system language between English and French:
Press and release the HFL Talk button before a command.

1. Say "**Change language**."

2. Follow the HFL prompts to change the language to English or French.

If you have not named your paired phone in the language you just selected, HFL will ask you to name it in the current language.

When French is your currently selected language, you can give voice commands in French.

***Bluetooth*® Wireless Technology**
The *Bluetooth*® word mark and logos are registered trademarks owned by Bluetooth SIG, Inc. and any use of such marks by Honda Motor Co., Ltd. is under license. Other trademarks and trade names are those of their respective owners.

As required by the FCC:
This device complies with Part 15 of the FCC rules. Operation is subject to the following two conditions: (1) This device may not cause harmful interference, and (2) this device must accept any interference received, including interference that may cause undesired operation.

Changes or modifications not expressly approved by the party responsible for compliance could void the user's authority to operate the equipment.

This device complies with Industry Canada Standard RSS-210.
Operation is subject to the following two conditions: (1) this device may not cause interference, and (2) this device must accept any interference that may cause undesired operation of the device.

Before you begin driving your vehicle, you should know what gasoline to use and how to check the levels of important fluids. You also need to know how to properly store luggage or packages. The information in this section will help you. If you plan to add any accessories to your vehicle, please read the information in this section first.

Break-in Period 246
Fuel Recommendation 246
Service Station Procedures 247
Refueling..... 247
Tighten Fuel Cap Message 249
Opening and Closing the Hood..... 250
Oil Check 251
Engine Coolant Check 252
Fuel Economy 253
Accessories and Modifications 256
Carrying Cargo 258

Break-in Period
Help assure your vehicle's future reliability and performance by paying extra attention to how you drive during the first 600 miles (1,000 km). During this period:

- Avoid full-throttle starts and rapid acceleration.
- Do not change the oil until the scheduled maintenance time.
- Avoid hard braking for the first 200 miles (300 km).

You should also follow these recommendations with an overhauled or exchanged engine, or when the brakes are replaced.

Fuel Recommendation
Your vehicle is designed to operate on unleaded gasoline with a pump octane number of 87 or higher. Use of a lower octane gasoline can cause a persistent, heavy metallic rapping noise that can lead to engine damage.

NOTICE

To help prevent harmful fuel system and engine deposits, use high quality fuel containing detergent and additives. In addition, in order to maintain good performance, fuel economy, and emissions control, we strongly recommend the use of gasoline that does NOT contain harmful manganese-based fuel additives such as MMT, if such gasoline is available.

Use of gasoline with these additives may adversely affect performance, and cause the malfunction indicator lamp on your instrument panel to come on. If this happens, contact your dealer for service. Some gasoline today is blended with oxygenates such as ethanol. Your vehicle is designed to operate on oxygenated gasoline containing up to 10% ethanol by volume. Do not use gasoline containing methanol. If you notice any undesirable operating symptoms, try another service station or switch to another brand of gasoline.

Because the level of detergency and additives in gasoline vary in the market, Honda endorses the use of "TOP TIER Detergent Gasoline" where available to help maintain the performance and reliability of your vehicle. TOP TIER Detergent Gasoline meets a new gasoline standard jointly established by leading automotive manufacturers to meet the needs of today's advanced engines. Qualifying gasoline retailers will, in most cases, identify their gasoline as having met "TOP TIER Detergent Gasoline" standards at the retail location. This fuel is guaranteed to contain the proper level of detergent additives and be free of metallic additives. The proper level of detergent additives, and absence of harmful metallic additives in gasoline, help avoid build-up of deposits in your engine and emission control system.

For further important fuel-related information for your vehicle, or information on gasoline that does not contain MMT, visit Owner Link at *owners.honda.com*. In Canada, visit *www.honda.ca* for additional information on gasoline. For more information on top tier gasoline, visit *www.toptiergas.com.*

Refueling

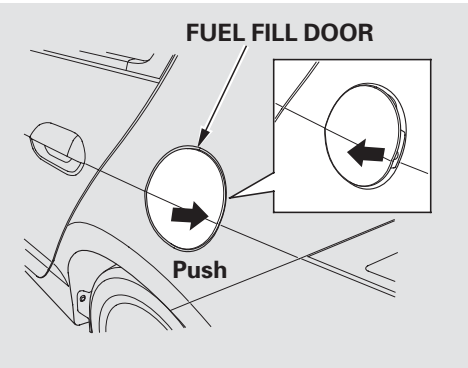

1. Park with the driver's side closest to the service station pump.

2. Outside of the vehicle, push on the right side edge of the fuel fill door in the middle until you hear a click. The fuel fill door will pop up slightly. Pull it outward to open it.

CONTINUED

⚠ WARNING

Gasoline is highly flammable and explosive. You can be burned or seriously injured when handling fuel.

- Stop the engine, and keep heat, sparks, and flame away.
- Handle fuel only outdoors.
- Wipe up spills immediately.

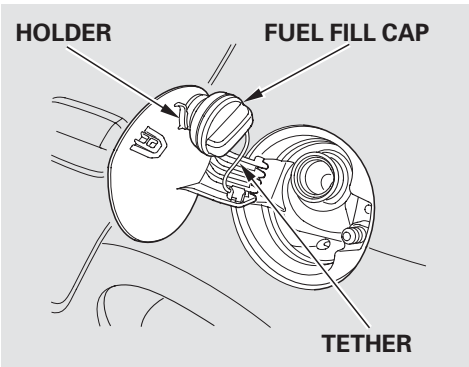

3. Remove the fuel fill cap slowly. You may hear a hissing sound as pressure inside the tank equalizes. The fuel fill cap is attached to the fuel filler with a tether. Place the cap in the holder on the fuel fill door.

4. Stop filling the tank after the fuel nozzle automatically clicks off. Do not try to “top off” the tank. This leaves some room in the fuel tank for the fuel to expand with temperature changes.

   If the fuel nozzle keeps clicking off even though the tank is not full, there may be a problem with your vehicle’s fuel vapor recovery system. The system helps keep fuel vapor from going into the atmosphere. Try filling at another pump. If this does not fix the problem, consult your dealer.

5. Screw the fuel fill cap back on until it clicks at least once. If you do not properly tighten the cap, you will see a “TIGHTEN FUEL CAP” message on the multi-information display. If the system still detects an evaporative system leak after retightening the cap, the malfunction indicator lamp may come on (see page 367).

6. Push the fuel fill door closed until it latches.

Tighten Fuel Cap Message

Your vehicle’s on board diagnostic system will detect a loose or missing fuel fill cap as an evaporative system leak. The first time a leak is detected a “TIGHTEN FUEL CAP” message appears on the multi-information display.

Turn the engine off, and confirm the fuel fill cap is installed. If it is, loosen it, then retighten it until it clicks at least once. The message should go off after several days of normal driving once you tighten or replace the fuel fill cap. To scroll to another message, press the INFO button.

The “TIGHTEN FUEL CAP” message will appear each time you restart the engine until the system turns the message off.

CONTINUED

If the system still detects a leak in the vehicle's evaporative emissions system, the malfunction indicator lamp (MIL) comes on. If the fuel fill cap was not already tightened, turn the engine off, and check or retighten the fuel fill cap until it clicks at least once. The MIL should go off after several days of normal driving once the cap is tightened or replaced. If the MIL does not go off, have your vehicle inspected by a dealer. For more information, see page 367 .

Opening and Closing the Hood

1. Park the vehicle, and set the parking brake. Pull the hood release handle located under the lower left corner of the dashboard. The hood will pop up slightly.

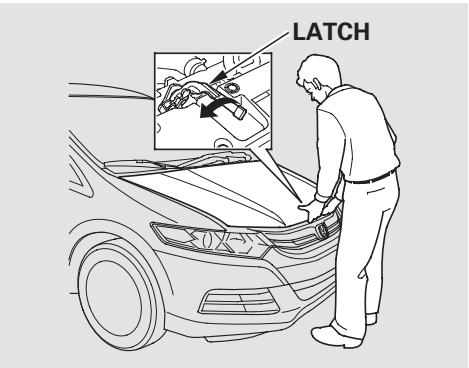

2. Put your fingers under the front edge of the hood near the center. Slide your hand to the left until you feel the hood latch handle. Push this handle to the left to release the hood. Lift up the hood.

   If the hood latch handle moves stiffly, or if you can open the hood without lifting the handle, the mechanism should be cleaned and lubricated.

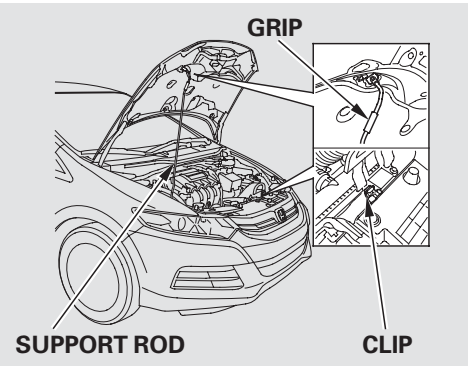

3. Holding the grip, pull the support rod out of its clip. Insert the end into the designated hole in the hood.

To close the hood, lift it up slightly to remove the support rod from the hole. Put the support rod back into its holding clip. Lower the hood to about a foot (30 cm) above the fender, then let it drop. Make sure it is securely latched.

Oil Check

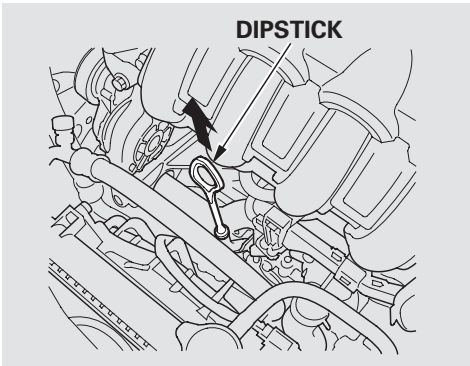

Wait a few minutes after turning the engine off before you check the oil.

1. Remove the dipstick (orange loop).
2. Wipe off the dipstick with a clean cloth or paper towel.
3. Insert the dipstick all the way back into its hole.

CONTINUED

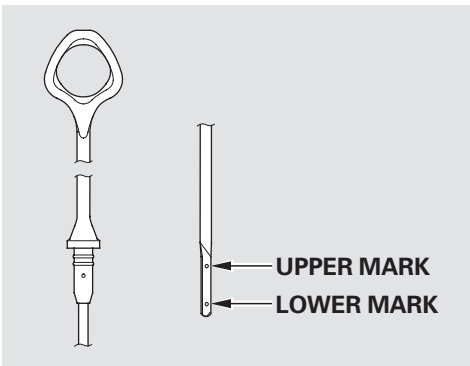

4. Remove the dipstick again, and check the level. It should be between the upper and lower marks.

If it is near or below the lower mark, see **Adding Engine Oil** on page 312 .

Engine Coolant Check

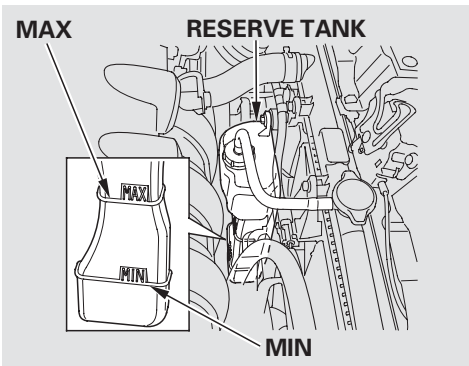

Look at the coolant level in the radiator reserve tank. Make sure it is between the MAX and MIN lines. If it is below the MIN line, see **Adding Engine Coolant** on page 317 for information on adding the proper coolant.

Refer to **Owner's Maintenance Checks** on page 309 for information about checking other items on your vehicle.

Actual Mileage and EPA Fuel Economy Estimates Comparison. Fuel economy is not a fixed number. It varies based on driving conditions, driving habits, and vehicle condition. Therefore, it is not possible for one set of estimates to predict fuel economy precisely for all drivers in all environments.

The EPA fuel economy estimates shown in the example to the right are a useful tool for comparison when buying a vehicle. EPA estimates include:

City MPG — Represents urban driving in light traffic. A range of miles per gallon achieved is also provided.

Highway MPG — Represents a mixture of rural and interstate driving, in a warmed-up vehicle, typical of longer trips in free-flowing traffic. A range of miles per gallon achieved is also provided.

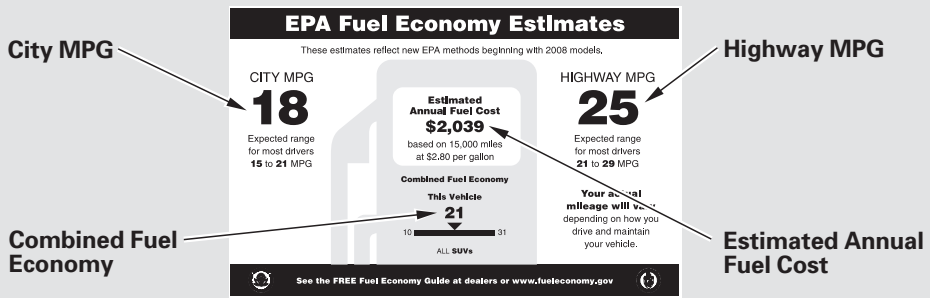

(Sample U.S. EPA label shown)

Combined Fuel Economy — Represents a combination of city and highway driving. The scale represents the range of combined fuel economy for other vehicles in the class.

Estimated Annual Fuel Cost — Provides an estimated annual fuel cost, based on 15,000 miles (20,000 km) per year multiplied by the cost per gallon (based on EPA fuel cost data) divided by the combined fuel economy.

For more information on fuel economy ratings and factors that affect fuel economy, visit *www.fueleconomy.gov* (Canada: Visit *www.vehicles.gc.ca*)

Fuel Economy Factors
The following factors can lower your vehicle's fuel economy:
- Aggressive driving (hard acceleration and braking)
- Excessive idling, accelerating and braking in stop-and-go traffic
- Cold engine operation (engines are more efficient when warmed up)
- Driving with a heavy load or the air conditioner running
- Improperly inflated tires

Improving Fuel Economy

Vehicle Maintenance
A properly maintained vehicle maximizes fuel economy. Poor maintenance can significantly reduce fuel economy. Always maintain your vehicle according to the maintenance messages displayed on the multi-information display (see **Owner's Maintenance Checks** on page 309). For example:

- **Use the recommended viscosity motor oil, displaying the API Certification Seal (see page 313).**

- **Maintain proper tire inflation** — An underinflated tire increases "rolling resistance," which reduces fuel economy.

- **Avoid carrying excess weight in your vehicle** — It puts a heavier load on the engine, increasing fuel consumption.

- **Keep your vehicle clean** — In particular, a build-up of snow or mud on your vehicle's underside adds weight and rolling resistance. Frequent cleaning helps your fuel economy.

Drive Efficiently
- **Drive moderately** — Rapid acceleration, abrupt cornering, and hard braking increase fuel consumption.

- **Observe the speed limit** — Aerodynamic drag has a big effect on fuel economy at speeds above 45 mph (75 km/h). Reduce your speed and you reduce the drag. Trailers, car top carriers, roof racks and bike racks are also big contributors to increased drag.

- **Avoid excessive idling** — Idling results in 0 miles per gallon (0 kms per liter).

- Use the ECON mode as much as possible.

- **Minimize the use of the air conditioning system** — The A/C puts an extra load on the engine which makes it use more fuel. Use the fresh-air ventilation when possible.

- **Plan and combine trips** — Combine several short trips into one. A warmed-up engine is more fuel efficient than a cold one.

Calculating Fuel Economy

Measuring Techniques
Direct calculation is the recommended source of information about your actual fuel economy. Using frequency of fill-ups or taking fuel gauge readings are NOT accurate measures of fuel economy. Fuel economy may improve over the first several thousand miles (kilometers).

Checking Your Fuel Economy

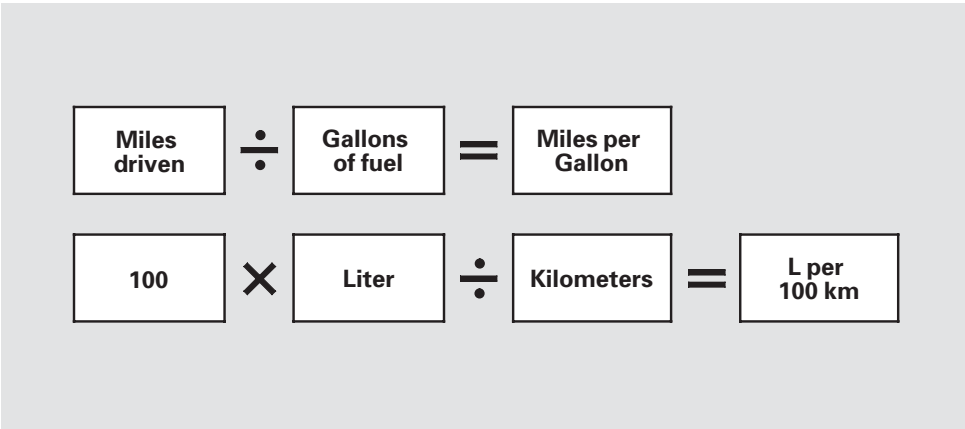

1) Fill the fuel tank until the nozzle automatically clicks off.
2) Reset trip counter to zero.
3) Record the total gallons (liters) needed to refill.
4) Follow one of the simple calculations above.

Modifying your vehicle, or installing non-Honda accessories, may make your vehicle unsafe. Before you make any modifications or add any accessories, be sure to read the following information.

Accessories
Your dealer has Honda accessories that allow you to personalize your vehicle. These accessories have been designed and approved for your vehicle, and are covered by warranty.

Although non-Honda accessories may fit on your vehicle, they may not meet factory specifications, and could adversely affect your vehicle's handling, stability, and reliability.

⚠ WARNING

Improper accessories or modifications can affect your vehicle's handling, stability, and performance, and cause a crash in which you can be hurt or killed.

Follow all instructions in this owner's manual regarding accessories and modifications.

When properly installed, cellular phones, alarms, two-way radios, and low-powered audio systems should not interfere with your vehicle's computer controlled systems, such as your airbags, anti-lock brakes, and tire pressure monitoring system (if equipped).

Before installing any accessory:

- Make sure the accessory does not obscure any lights, or interfere with proper vehicle operation or performance.
- Be sure electronic accessories do not overload electrical circuits (see page 369) or interfere with the proper operation of your vehicle.
- Before installing any electronic accessory, have the installer contact your dealer for assistance. If possible, have your dealer inspect the final installation.
- Do not install accessories on the side pillars or across the rear windows. Accessories installed in these areas may interfere with proper operation of the side curtain airbags.

Modifying Your Vehicle
Removing parts from your vehicle, or replacing components with non-Honda components could seriously affect your vehicle's handling, stability, and reliability.

Some examples are:

- Lowering your vehicle with a non-Honda suspension kit that significantly reduces ground clearance can allow the undercarriage to hit speed bumps or other raised objects, which could cause the airbags to deploy.

- Raising your vehicle with a non-Honda suspension kit can affect the handling, stability, and reliability.

- Non-Honda wheels, because they are a universal design, can cause excessive stress on suspension components and will not be compatible with the tire pressure monitoring system (TPMS)*.

- Larger or smaller wheels and tires can interfere with the operation of your vehicle's anti-lock brakes and other systems.

- Modifying your steering wheel or any other part of your vehicle's safety features can make the systems ineffective.

If you plan to modify your vehicle, consult your dealer.

* : U.S. models

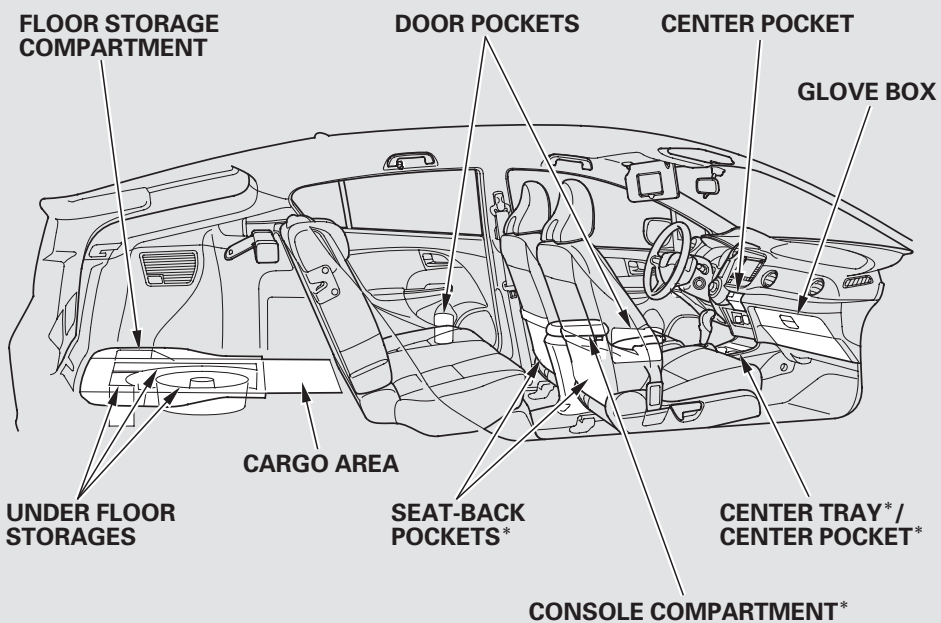

EX with navigation system model is shown.
∗ : If equipped

Your vehicle has several convenient storage areas:

- Glove box
- Door pockets
- Seat-back pockets*
- Under floor storages
- Floor storage compartment
- Center tray
- Console compartment*
- Center pocket(s)*
- Cargo area

However, carrying too much cargo, or improperly storing it, can affect your vehicle's handling, stability, stopping distance, and tires, and make it unsafe. Before carrying any type of cargo, be sure to read the following pages.

∗ : If equipped

Load Limits
The maximum load for your vehicle is 850 lbs (385 kg).

See Tire And Loading Information label attached to the driver's doorjamb.

Label Example

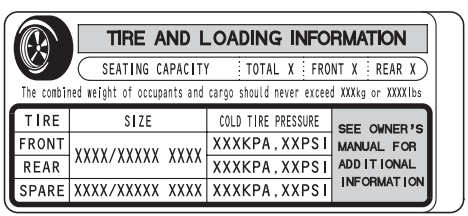
TIRE AND LOADING INFORMATION

SEATING CAPACITY | TOTAL X | FRONT X | REAR X

The combined weight of occupants and cargo should never exceed XXXkg or XXXXlbs

TIRE	SIZE	COLD TIRE PRESSURE	SEE OWNER'S MANUAL FOR ADDITIONAL INFORMATION
FRONT	XXXX/XXXXX XXXX	XXXKPA, XXPSI	
REAR		XXXKPA, XXPSI	
SPARE	XXXX/XXXXX XXXX	XXXKPA, XXPSI	

This figure includes the total weight of all occupants, cargo, and accessories, and the tongue load if you are towing a trailer.

⚠ WARNING

Overloading or improper loading can affect handling and stability and cause a crash in which you can be hurt or killed.

Follow all load limits and other loading guidelines in this manual.

Steps for Determining Correct Load Limit —

(1) Locate the statement "The combined weight of occupants and cargo should never exceed XXX kg or XXX lbs." on your vehicle's placard.

(2) Determine the combined weight of the driver and passengers that will be riding in your vehicle.

(3) Subtract the combined weight of the driver and passengers from XXX kg or XXX lbs.

(4) The resulting figure equals the available amount of cargo and luggage load capacity. For example, if the "XXX" amount equals 1,400 lbs. and there will be five 150 lb. passengers in your vehicle, the amount of available cargo and luggage load capacity is 650 lbs.
(1,400 − 750 (5 × 150) = 650 lbs.)

(5) Determine the combined weight of luggage and cargo being loaded on the vehicle. That weight may not safely exceed the available cargo and luggage load capacity calculated in Step 4.

(6) If your vehicle will be towing a trailer, load from your trailer will be transferred to your vehicle. Consult this manual to determine how this reduces the available cargo and luggage load capacity of your vehicle.

CONTINUED

Example 1	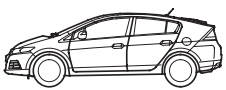	≧		+	
	Max Load 850 lbs (385 kg)		**Passenger Weight 150 lbs x 2 = 300 lbs (68 kg x 2 = 136 kg)**		**Cargo Weight 550 lbs (249 kg)**
Example 2	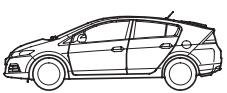	≧		+	
	Max Load 850 lbs (385 kg)		**Passenger Weight 150 lbs x 4 = 600 lbs (68 kg x 4 = 272 kg)**		**Cargo Weight 250 lbs (113 kg)**
Example 3	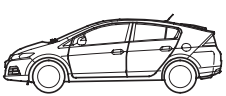	≧		+	
	Max Load 850 lbs (385 kg)		**Passenger Weight 150 lbs x 5 = 750 lbs (68 kg x 5 = 340 kg)**		**Cargo Weight 100 lbs (45 kg)**

In addition, the total weight of the vehicle, all occupants, accessories, cargo, and trailer tongue load must not exceed the Gross Vehicle Weight Rating (GVWR) or the Gross Axle Weight Rating (GAWR). Both are on a label on the driver's doorjamb.

Carrying Items in the Passenger Compartment

- Store or secure all items that could be thrown around and hurt someone during a crash.

- Be sure items placed on the floor behind the front seats cannot roll under the seats and interfere with the driver's ability to operate the pedals, the operation of the seats, or the operation of the sensors under the seats.

- Keep the glove box closed while driving. If it is open, a passenger could injure their knees during a crash or sudden stop.

Carrying Cargo in the Cargo Area

- Distribute cargo evenly on the floor of the hatch, placing the heaviest items on the bottom and as far forward as possible.

  Try to secure the items with rope or cord so they will not shift while you are driving.

- Do not place items on the cargo area cover (if equipped), or stack objects higher than the top of the back seat. They could block your view and be thrown about the vehicle during a crash or sudden stop.

- Do not spill any liquids on or around the IMA battery. Spilled liquids may damage the IMA battery. If you accidentally spill liquids on or around the battery, ensure that the spill is completely wiped up at the earliest possible time.

- If you carry large items that prevent you from closing the hatch, exhaust gas can enter the passenger area. To avoid the possibility of **carbon monoxide poisoning**, follow the instructions on page 56 .

- If you fold the rear seats down, tie down items that could be thrown about the vehicle during a crash or sudden stop. Keep all cargo below the bottom of the windows. If it is higher, it could interfere with proper operation of the side curtain airbags.

Refer to page 145 for folding rear seats.

Air Intake

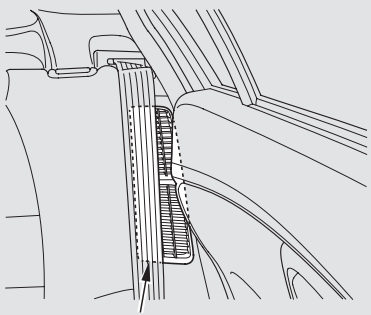

The air intake for the IMA battery and electronics is located on the rear left pillar. Do not block this air intake. Doing so may cause the IMA battery and the power control unit to overheat, causing the IMA to shut down. It will start working again after it cools.

Do not spill any liquids over the air intake or insert any foreign objects in it. This may damage the IMA battery and the power control unit.

This section gives you tips on starting the engine under various conditions, and how to operate the automatic transmissions (CVT). It also includes important information on parking your vehicle, the braking system, the vehicle stability assist (VSA®) system, and the tire pressure monitoring system (TPMS).

Preparing to Drive 264
Starting the Engine..... 265
Eco Assist System 266
Automatic Transmission (CVT) .. 273
Driving with the Paddle Shifters..... 278
Auto Idle Stop..... 283
Parking..... 286
Braking System..... 287
Anti-lock Brakes (ABS) 289
Tire Pressure Monitoring System (TPMS) 291
Vehicle Stability Assist (VSA®), aka Electronic Stability Control (ESC), System 295
Hill Start Assist System 297
Towing a Trailer 298

You should do the following checks and adjustments before you drive your vehicle.

1. Make sure all windows, mirrors, and outside lights are clean and unobstructed. Remove frost, snow, or ice.

2. Check that the hood and hatch are fully closed.

3. Visually check the tires. If a tire looks low, use a gauge to check its pressure (see page 340).

4. Check that any items you may be carrying are stored properly or fastened down securely.

5. Check the seat adjustment (see page 141).

6. Check the adjustment of the inside and outside mirrors (see page 147).

7. Check the steering wheel adjustment (see page 128).

8. Make sure the doors are securely closed and locked.

9. Fasten your seat belt. Check that your passengers have fastened their seat belts (see page 17).

10. When you start the engine, check the gauges and indicators in the instrument panel, and the messages on the multi-information display (see pages 61 , 72 and 89).

1. Apply the parking brake.

2. In cold weather, turn off all electrical accessories to reduce the drain on the battery.

3. Make sure the shift lever is in Park. Press on the brake pedal.

4. Without touching the accelerator pedal, turn the ignition key to the START (III) position. Do not hold the key in the START (III) position for more than 15 seconds at a time. If the engine does not start right away, pause for at least 10 seconds before trying again.

NOTICE

The immobilizer system protects your vehicle from theft. If an improperly coded key (or other device) is used, the engine's fuel system is disabled. For more information, see page 130.

Starting in Cold Weather

In cold weather, the conventional starter is used instead of the IMA system starter. This is normal.

NOTICE

The engine is harder to start in cold weather. Also, the thinner air found at altitudes above 8,000 feet (2,400 meters) adds to this problem.

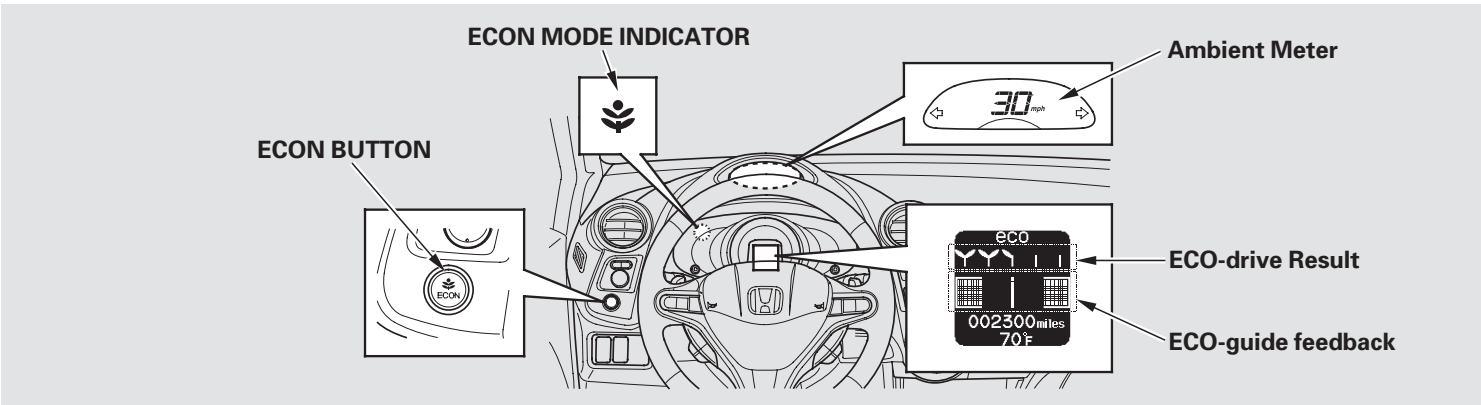

Eco Assist System is a driver feedback system designed to help you develop and maintain a fuel efficient driving style.

The system monitors your driving style, and can display how it impacts your vehicle's fuel economy. You can then make adjustments to your driving style to maximize fuel economy. (For additional information on fuel economy, see page 253 .)

Your vehicle's fuel economy may improve more with the ECON mode on (see page 127).

The driver feedback information is shown in two locations:

- The ambient meter, located behind the speedometer (see page 72).
- The multi-information display (see page 75).

Eco Guide Feedback

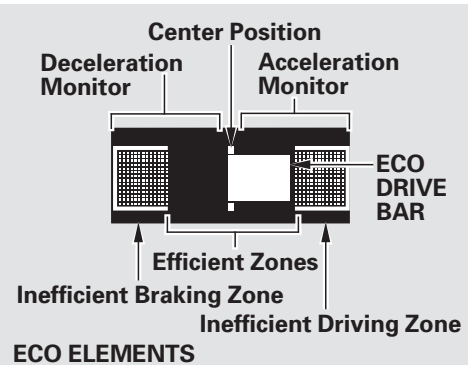

The Eco Drive Bar on the Eco guide feedback display appears on the multi-information display while you drive.

- During acceleration, the bar extends to the right of the center line.
- During deceleration, the bar extends to the left of the center line.
- If the bar stays within the Efficient Driving Zones, your current driving style is conducive to good fuel economy.
- If the bar extends into the Inefficient Driving Zones, your current driving style is not conducive to good fuel economy.

It is recommended to drive in the D position for better fuel efficiency.

Eco Drive Bar Examples

Driving Style	Eco Drive Bar
Slow, steady acceleration - maximizes fuel economy	
Slow deceleration - maximizes fuel economy	
Moderate acceleration	
Moderate deceleration	
Aggressive/ Inconsistent acceleration - lowers fuel economy	
Aggressive deceleration - lowers fuel economy	

CONTINUED

Ambient Meter

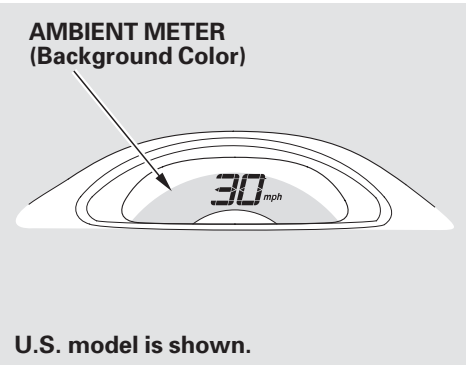

The Ambient Meter (the light behind the speedometer) changes color to show the effects of your driving style. This feature can be turned off (see page 103).

Meter Background Color	Fuel Economy
Green	High
Blue Green	
Blue	Low

Eco Assist Scoring

A point system is used so you can monitor your driving style and the impact on fuel economy. Points are:

- Accumulated when your driving style is fuel efficient
- Deducted when your style is not fuel efficient

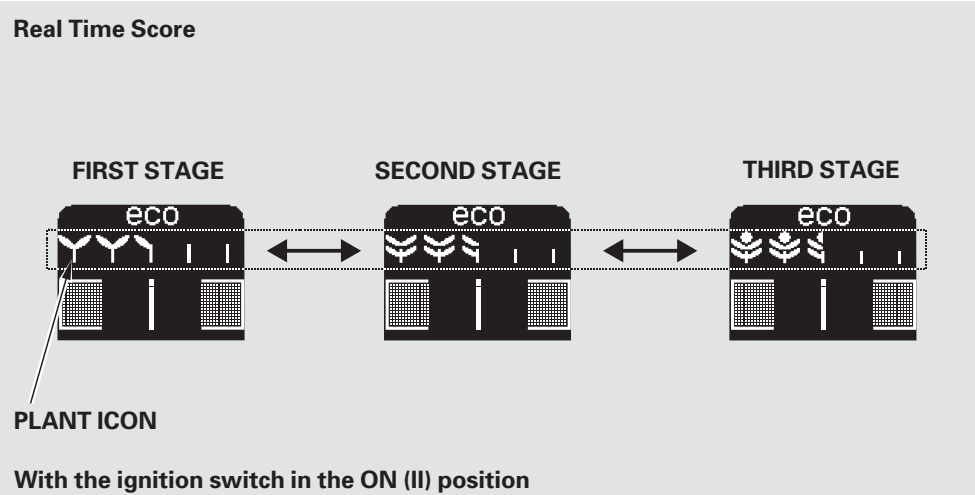

Eco Assist scoring is displayed on the multi-information display in the following ways:

Real Time Score — Your current trip is represented on the Eco Guide screen, starting without any leaves on the plants. Leaves then accumulate during the current trip, as long as you maintain an economic driving style.

CONTINUED

Drive Cycle Score — The score from your just completed trip is represented on the Eco Score screen by the “plant” icons.

Lifetime Points — Cumulative, or lifetime trips, which build up over time, represented by a bar graph at the bottom of the Eco Score display.

Each time you turn the ignition switch to the LOCK (0) position, the Eco Score displays for a few seconds to show your current stage and lifetime points.

Drive Cycle Score/Lifetime Points

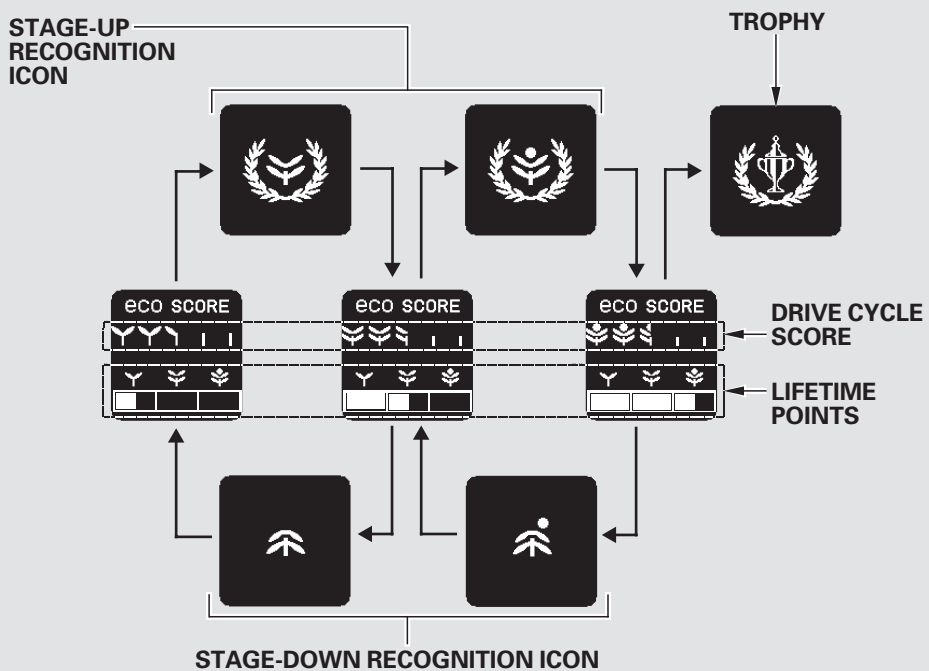

When turning off the ignition switch

There are three Eco stages, with five plants per stage. As you accumulate a specified number of leaves, you advance from one stage to the next. The plant grows leaves from left to right, or loses them from right to left. A trophy icon appears once you have reached the maximum third stage score.

The scoring system for points is based on:
- Braking and accelerating
- Vehicle speed
- ECON button usage
- Idle duration

Real time scores must accumulate over time to result in a stage change. In order to build lifetime points and advance to the next stage, you need to keep your efficient driving style every time you make a trip. It can take several months to move from one stage to the next. Individual results will vary.

Stages/Displays and Icons	Definition
First Stage	A total of two leaves can be put on each plant icon.
Second Stage	A total of four leaves can be added to each plant icon.
Third Stage	A circular shaped icon, which represents a blossom, can be added on top of each plant icon with four leaves.
Maximum Score Icons **First Stage** **Second Stage** **Third Stage**	An icon appears once you have reached the maximum score for each stage and are moving up to the next stage. These icons appear briefly when the ignition switch is turned off. Once the 3rd stage maximum score is reached, the system continues to monitor your driving. If you maintain a fuel efficient driving style, your score remains at the highest stage. If you drive less efficiently, points will be deducted and you may drop (stage down) to the previous stage.

CONTINUED

As you progress to a higher level, the system monitors your driving style more strictly. As a result, you must further refine your driving style to continue to move up to the next level.

The following are some of the conditions that may affect your score:

- Extremely high or low ambient temperature
- Inconsistent acceleration use, such as pumping the pedal repeatedly within a short period of time
- Frequent use of the climate control system
- Short distance trips

Reset the System

The following procedure clears all leaves and your lifetime points. This procedure must be followed exactly.

Turn the ignition switch to the ON (II) position. Confirm that the ECON mode is OFF. If it is OFF, proceed to step 1. Do **not** run the engine.

If the ECON mode is on, press and release the ECON button to turn it off. You also need to turn the ignition switch off.

Turn the ignition switch to the ON (II) position again. Do **not** run the engine.

Complete the following steps within 30 seconds:

1. Press and release the brake pedal at least two times. The ambient meter color changes from blue to green*.

   *: The ambient meter color changes only if the multi-information display's meter color change setting is on. (See page 103 .)

2. Press and release the ECON button two times (ECON mode comes on, then goes off). The ambient meter color goes off, and the accumulated data is cleared.

3. Turn the ignition switch to the LOCK (0) position.

Continuously Variable Transmission (CVT)
Honda's Continuously Variable Transmission's unique design provides a smooth, constant flow of power. It is electronically controlled for more precise operation and better fuel economy.

Shift Lever Position Indicators

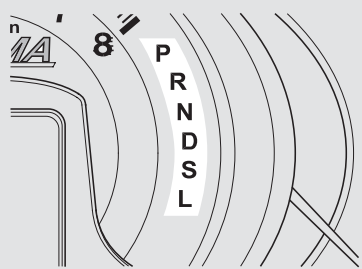

Insight and LX models

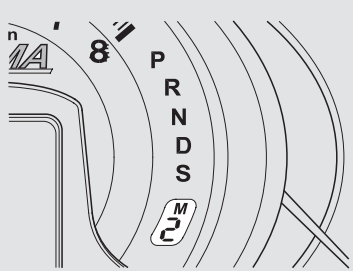

EX models

These indicators on the instrument panel show which position the shift lever is in.

The "D" indicator comes on for a few seconds when you turn the ignition switch to the ON (II) position. If it flashes while driving (in any shift position), it indicates a possible problem in the transmission.

If the malfunction indicator lamp comes on along with the "D" indicator, there is a problem with the automatic transmission control system. Avoid rapid acceleration, and have the transmission checked by your dealer as soon as possible. When the "D" indicator warns of a possible problem with the transmission, you will see a "CHECK TRANSMISSION" message on the multi-information display.

Shifting

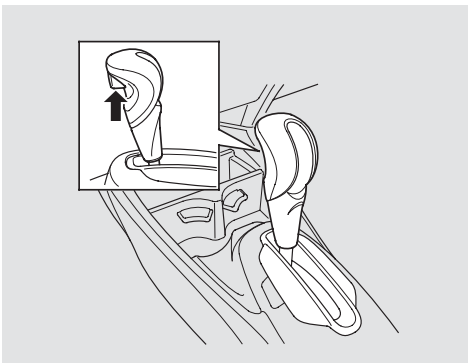

To shift from Park to any position, press the brake pedal, the release button on the front of the shift lever, then pull the lever. You cannot shift out of Park when the ignition switch is in the LOCK (0) or the ACCESSORY (I) position.

Insight and LX models

To shift from:	Do this:
P to R	Press the brake pedal and press the release button.
R to P N to R D to S S to L	Press the release button.
L to S S to D D to N N to D R to N	Move the lever.

EX models

To shift from:	Do this:
P to R	Press the brake pedal and press the release button.
R to P N to R D to S	Press the release button.
S to D D to N N to D R to N	Move the lever.

Park (P) — This position mechanically locks the transmission. Use Park whenever you are turning off or starting the engine. To shift out of Park, you must press on the brake pedal and have your foot off the accelerator pedal. Press the release button on the front of the shift lever to move it.

If you have done all of the above and still cannot move the lever out of Park, see **Shift Lock Release** on page 277 .

You must also press the release button to shift into Park. To avoid transmission damage, come to a complete stop before shifting into Park. The shift lever must be in Park before you can remove the key from the ignition switch.

Reverse (R) — Press the brake pedal and the release button on the front of the shift lever to shift from Park to reverse. To shift from reverse to neutral, come to a complete stop, and then shift. Press the release button before shifting into reverse from neutral.

Neutral (N) — Use Neutral if you need to restart a stalled engine or if it is necessary to stop briefly with the engine idling. Always shift to the Park position if you need to leave the vehicle for any reason. Press on the brake pedal when you are moving the shift lever from Neutral to another position.

Drive (D) — Use this position for your normal driving. The transmission automatically adjusts to keep the engine at the best speed for driving conditions. To help the engine warm up faster, the transmission will select ratios that allow the engine to run at higher speeds when it is cold.

Insight and LX models

Second (S) — To shift into the S position, press the release button on the front of the shift lever, and move the lever to S. Selecting Second shifts the transmission into a lower range of ratios for better acceleration and increased engine braking. Use Second when you are going down a steep hill.

CONTINUED

Insight and LX models
Low (L) — To shift to Low, press the release button on the front of the shift lever. Use Low to make better use of engine power when climbing, and for maximum engine braking when going down steep hills.

For faster acceleration when in D, S, or L, the transmission will automatically "kick down" to a lower range of ratios by pushing the accelerator pedal to the floor.

EX models
Second (S) — To shift into the S position, press the release button on the front of the shift lever, and move the lever to S. The S position is similar to D, except the range of ratios are different for better acceleration and increased engine braking.

With the shift lever in D or S, you can also use the paddle shifters to shift the transmission up or down. With the paddle shifters, you can operate the transmission much like a manual transmission without a clutch pedal. For more information on driving with the paddle shifters, see page 278 .

Speed Limiter
When the vehicle reaches the maximum speed in any shift position, you may feel the engine cut in and out. This is caused by a limiter (112 mph, 180 km/h) in the engine's computer controls. The engine will run normally when you reduce the speed to below the maximum.

Shift Lock Release
This allows you to move the shift lever out of Park if the normal method of pushing on the brake pedal and pressing the release button does not work.

1. Set the parking brake.

2. Remove the key from the ignition switch.

3. Put a cloth on the notch of the shift lock release slot cover to prevent scratches. Using a small flat-tip screwdriver or a metal fingernail file, carefully pry on the notch of the cover to remove it.

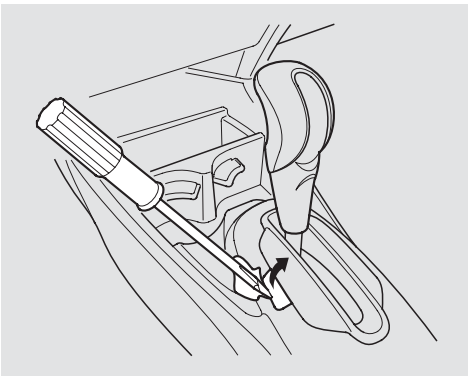

4. Insert the key in the shift lock release slot.

5. Push down on the key while you press the release button on the shift lever and move the shift lever out of Park to neutral.

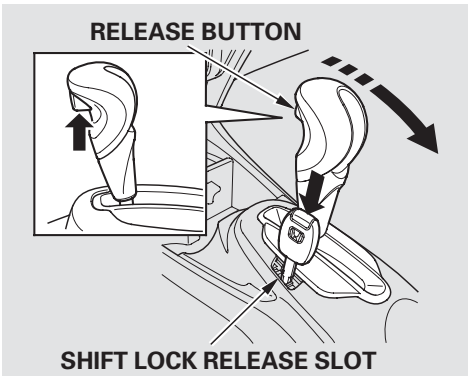

6. Remove the key from the shift lock release slot, then reinstall the cover. Make sure the notch on the cover is on the left side. Insert the key into the ignition switch, press the brake pedal, and restart the engine.

If you need to use the shift lock release, it means your vehicle is developing a problem. Have it checked by your dealer.

Using the Paddle Shifters in the D position (D-Paddle Shift Mode)
On EX models
When you are driving in the D position, pulling either paddle shifter switches from the D-normal shift mode to the D-paddle shift mode. You can shift the transmission up or down through seven-stages manually with the paddle shifters.

Downshifting gives you more power when climbing, and provides engine braking when going down a steep hill.

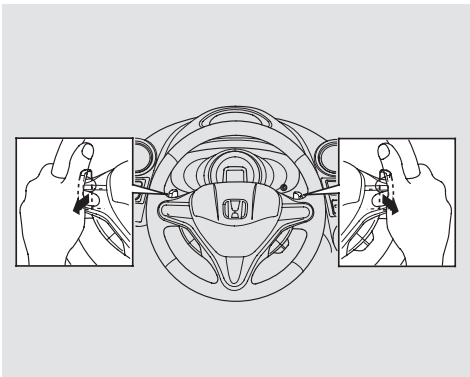

To shift up or down, use the + (right) or − (left) paddle shifter on either side of the steering wheel.

Pull the + (right) paddle shifter to upshift. Pull − (left) to downshift.

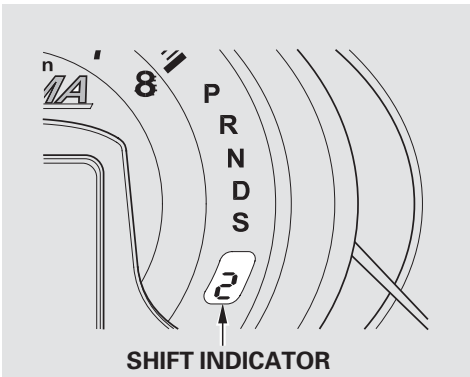

When you pull either paddle shifter, the shift indicator shows you the selected speed number.

When the transmission returns to ordinary automatic transmission (CVT), the displayed shift indicator disappears.

Downshifting with the − (left) paddle shifter allows you to increase the engine braking when going down steep or long hills, and provides more power when climbing uphills. You can upshift the transmission manually to reduce the rpm.

The transmission control system monitors the accelerator pedal use and your driving conditions. When you press the accelerator pedal as in the normal driving, the system judges that you are driving at a constant cruising speed without using the paddle shifters. Under these conditions, D-paddle shift mode is canceled, and the transmission automatically returns to ordinary automatic transmission (CVT).

To cancel the D-paddle shift mode manually, pull and hold the + side paddle shifter until the shift indicator goes out.

The transmission remains in the selected speed if you do not accelerate.

CONTINUED

Each time you pull either paddle shifter, the transmission shifts one speed up or down. If you want to shift up or down more than two speeds, pull the paddle shifter twice, pause, and then pull it again.

The automatic transmission (CVT) will not allow you to shift if:

- You downshift before the engine speed reaches the highest threshold of the lower speed.

  If you try to do this, the shift indicator will flash the number of the lower speed several times, then return to a higher speed.

- You upshift before the engine speed reaches the lowest threshold of the higher speed.

- You pull both paddle shifters at the same time.

- You pull one of the two paddle shifters with another paddle shifter being pulled.

The transmission downshifts to first speed and returns to ordinary automatic transmission (CVT) when the vehicle comes to a complete stop and the vehicle speed is about 6 mph (10 km/h).

If there is a problem in the transmission while you are driving with the paddle shifters, the D indicator flashes, the D-paddle shift mode is canceled, and the transmission returns to ordinary automatic transmission (CVT).

Using the Paddle Shifters in the S position (7-Speed Manual Shift Mode)

On EX models

With the shift lever in the S position, you can select the 7-Speed Manual shift mode to shift speeds; much like a manual transmission using the paddle shifters, but without a clutch pedal.

To enter the 7-speed manual shift mode, press the release button on the front of the shift lever, move the lever to the S position, then pull either paddle shifter. To cancel the 7-speed manual shift mode and return to the ordinary automatic transmission (CVT), move the shift lever from the S position. When moving the shift lever, be careful not to operate incorrectly. While you are driving in the 7-speed manual shift mode, the transmission will not automatically return to the ordinary automatic transmission (CVT).

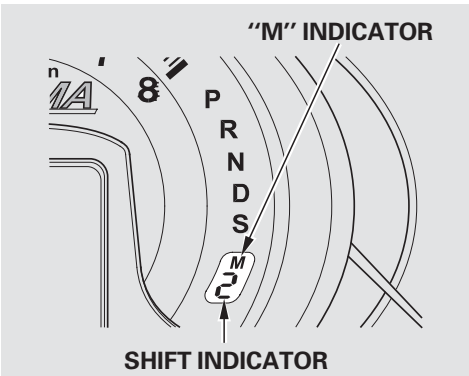

When you move the shift lever from the "D" to the "S" position and pull either paddle shifter, the shift indicator displays "M" along with the selected speed number.

To upshift, pull the + (right) paddle shifter. To downshift, pull the − (left) paddle shifter.

If you keep depressing the accelerator pedal without pulling the paddle shifter, the speed will be automatically shifted up just before the tachometer's red zone.

The transmission also shifts automatically as the vehicle comes to a complete stop. It downshifts to first speed when the vehicle speed reaches 6 mph (10 km/h) or less.

Downshifting with the − (left) paddle shifter allows you to increase the engine braking when going down steep or long hills, and provides more power when climbing uphills. You can upshift the transmission manually to reduce the rpm.

CONTINUED

The automatic transmission (CVT) will not allow you to shift if:

- You downshift before the engine speed reaches the highest threshold of the lower speed.

  If you try to do this, the shift indicator will flash the number of the lower speed several times, then return to a higher speed.

- You upshift before the engine speed reaches the lowest threshold of the higher speed.

- You pull both paddle shifters at the same time.

- You pull one of the two paddle shifters with another paddle shifter being pulled.

Recommended Shift Points
Drive in the highest speed number that lets the engine run and accelerate smoothly. This will give you effective emissions control. The following shift points are recommended:

Shift up	Normal acceleration
1 → 2	15 mph (24 km/h)
2 → 3	25 mph (40 km/h)
3 → 4	40 mph (64 km/h)
4 → 5	45 mph (72 km/h)
5 → 6	50 mph (81 km/h)
6 → 7	55 mph (89 km/h)

L (Low) mode — To shift to Low, pull and hold both paddle shifters simultaneously until you see L in the shift indicator. Use Low to get more power when climbing, and for maximum engine braking when going down steep hills.

To help maximize fuel economy, your vehicle has an Auto Idle Stop function. Depending on environmental conditions and vehicle operation, the engine will shut off when you come to a stop.

The engine automatically stops when the vehicle comes to a stop with the shift lever in the D position and the brake pedal pressed.
The engine may also stop when vehicle speed drops below 7 mph (11 km/h) with the brake pedal pressed.

While the auto idle stop function is activated, the auto idle stop indicator in the instrument panel blinks (see page 285).

When the ECON mode is on, the engine is more likely to stop than when it is off (see page 127).

The engine will not stop automatically under the following conditions:

- Vehicle speed does not go above 9 mph (15 km/h) after starting the engine.
- The pointer of the charge/assist gauge does not move when accelerating or decelerating.
- The engine coolant temperature is low.
- The transmission fluid temperature is low.
- The vehicle is stopped with the shift position in P, R, S, or L.
- When the vehicle is stopped on an incline.
- The windshield defroster is on.
- The fan speed is selected to high (more than four steps on the horizontal fan speed indicators).
- The IMA battery charge is low.

CONTINUED

The engine may not stop automatically under the following conditions:

- The ECON button is off, and there is a significant difference between the ambient temperature and the temperature setting of the climate control system.
- The climate control system is dehumidifying the air.
- The vehicle is stopped by braking suddenly.

When the ECON button is on, the engine is more likely to stop. See page 127 for the ECON button.

The engine automatically restarts when:

The brake pedal is released.

Under the following conditions, the engine restarts even if the brake pedal is pressed:

- The shift position is changed to R or L.
- The accelerator pedal is pressed
- The pressure to the brake pedal is reduced and the vehicle starts moving while stopped on an incline.
- The IMA battery charge becomes low.
- The windshield defroster button is pressed.
- The engine coolant temperature becomes low.
- The pressure on the brake pedal is repeatedly applied and released slightly during a stop.
- The ECON button is off, and the difference between the ambient temperature and the temperature setting of the climate control system becomes significant.
- The climate control system starts to dehumidify the interior

Auto Idle Stop Indicator

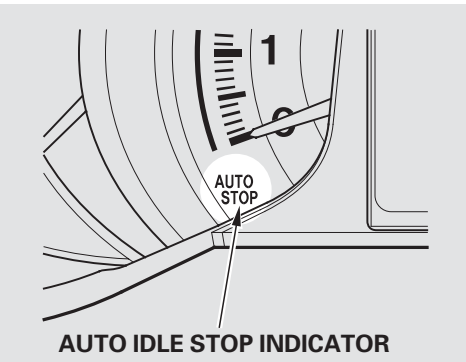

This indicator blinks when the auto idle stop system is in operation. If the driver's door is opened while the indicator is blinking, the buzzer sounds to notify that the auto idle stop system is active.

If the auto idle stop function turns off the engine for a long time, the charge of the IMA and 12 volt batteries becomes low, and the engine may not restart automatically. Always turn the ignition switch to the LOCK (0) position, set the parking brake, and remove the key if you are getting out of the vehicle.

The time that auto idle stop is activated may be reduced if you operate the windshield wipers with the climate control system on.

Always use the parking brake when you park your vehicle. Make sure the parking brake is set firmly, or your vehicle may roll if it is parked on an incline.

Set the parking brake before you put the transmission in Park. This keeps the vehicle from moving and putting pressure on the parking mechanism in the transmission.

Parking Tips

- Make sure the windows are closed.
- Turn off the lights.
- Place any packages, valuables, etc. in the cargo area or take them with you.
- Lock the doors and the hatch.

  LX and EX models
  Check the indicator on the instrument panel to verify that the security system is set.
- Never park over dry leaves, tall grass, or other flammable materials. The hot three way catalytic converter could cause these materials to catch on fire.
- If the vehicle is facing uphill, turn the front wheels away from the curb.
- If the vehicle is facing downhill, turn the front wheels toward the curb.
- Make sure the parking brake is fully released before driving away. Driving with the parking brake partially set can overheat or damage the rear brakes.

Your vehicle is equipped with front disc brakes. The brakes on the rear wheels are drum. A power assist helps reduce the effort needed on the brake pedal. The ABS helps you retain steering control when braking very hard.

Resting your foot on the pedal keeps the brakes applied lightly, builds up heat, reduces their effectiveness and reduces brake pad life. In addition, fuel economy can be reduced. It also keeps your brake lights on all the time, confusing drivers behind you.

Constant application of the brakes when going down a long hill builds up heat and reduces their effectiveness. Use the engine to assist the brakes by taking your foot off the accelerator and downshifting to a lower speed.

Check the brakes after driving through deep water. Apply the brakes moderately to see if they feel normal. If not, apply them gently and frequently until they do. Be extra cautious in your driving.

Braking System Design
The hydraulic system that operates the brakes has two separate circuits. Each circuit works diagonally across the vehicle (the left-front brake is connected with the right-rear brake, etc.). If one circuit should develop a problem, you will still have braking at two wheels.

The following features are also equipped:

Creep Aid System
With the shift lever in D, S or L, this feature applies brake pressure briefly as you release the brake pedal to prevent the vehicle from moving unexpectedly.

Brake-Assist
This feature helps you apply the brakes with less force during an emergency braking situation.

Brake Pad Wear Indicators
If the brake pads need replacing, you will hear a distinctive, metallic screeching sound when you apply the brake pedal. If you do not have the brake pads replaced, they will screech all the time. It is normal for the brakes to occasionally squeal or squeak when you apply them.

The anti-lock brake system (ABS) helps prevent the wheels from locking up, and helps you retain steering control by pumping the brakes rapidly, much faster than a person can do it.

The electronic brake distribution (EBD) system, which is part of the ABS, also balances the front-to-rear braking distribution according to vehicle loading.

You should never pump the brake pedal. Let the ABS work for you by always keeping firm, steady pressure on the brake pedal. This is sometimes referred to as “stomp and steer.”

You will feel a pulsation in the brake pedal when the ABS activates, and you may hear some noise. This is normal: it is the ABS rapidly pumping the brakes. On dry pavement, you will need to press on the brake pedal very hard before the ABS activates. However, you may feel the ABS activate immediately if you are trying to stop on snow or ice.

ABS Indicator

If this indicator comes on, the anti-lock function of the braking system has shut down. The brakes still work like a conventional system, but without anti-lock. You should have your dealer inspect your vehicle as soon as possible.

When the ABS indicator comes on, you will also see a “CHECK ABS SYSTEM” message on the multi-information display.

If the ABS indicator comes on while driving, test the brakes as shown on page 368 .

CONTINUED

If the ABS indicator and the brake system indicator come on together, and the parking brake is fully released, the EBD system may also be shut down.

Test your brakes as instructed on page 368 . If the brakes feel normal, drive slowly and have your vehicle repaired by your dealer as soon as possible. Avoid sudden hard braking which could cause the rear wheels to lock up and possibly lead to a loss of control.

Important Safety Reminders

ABS does not reduce the time or distance it takes to stop the vehicle. It only helps with steering control during braking.

ABS will not prevent a skid that results from changing direction abruptly, such as trying to take a corner too fast or making a sudden lane change. Always drive at a safe speed for the road and weather conditions.

ABS cannot prevent a loss of stability. Always steer moderately when you are braking hard. Severe or sharp steering wheel movement can still cause your vehicle to veer into oncoming traffic or off the road.

A vehicle with ABS may require a longer distance to stop on loose or uneven surfaces, such as gravel or snow, than a vehicle without anti-lock.

U.S. models only
Your vehicle is equipped with a tire pressure monitoring system (TPMS) that turns on every time you start the engine and monitors the pressure in your tires while driving.

Each tire has its own pressure sensor. If the air pressure of a tire becomes significantly low, the sensor in that tire immediately sends a signal that causes the low tire pressure/TPMS indicator in the instrument panel to come on. If this happens, you will see a "CHECK TIRE PRESSURE" message on the multi-information display.

Low Tire Pressure/ TPMS Indicator

When the low tire pressure/TPMS indicator is on, one or more of your tires is significantly underinflated. You should stop and check your tires as soon as possible, and inflate them to the proper pressure as indicated on the vehicle's tire information placard.

If you cannot make the low tire pressure/TPMS indicator and message on the multi-information display go out after inflating the tires to the specified values, have your dealer check the system as soon as possible.

If you think you can safely drive a short distance to a service station, proceed slowly to the station, then inflate the tire to the recommended pressure.

If the tire is flat, or if the tire pressure is too low to continue driving, replace the tire with the compact spare tire (see page 350).

Driving on a significantly under-inflated tire causes the tire to overheat and can lead to tire failure. Under-inflation also reduces fuel efficiency and tire tread life, and may affect the vehicle's handling and stopping ability.

Because tire pressure varies by temperature and other conditions, the low tire pressure/TPMS indicator may come on unexpectedly.

CONTINUED

For example, if you check and fill your tires in a warm area, then drive in extremely cold weather, the tire pressure will be lower than measured and could be underinflated and cause the low tire pressure/ TPMS indicator to come on. Or, if you check and adjust your tire pressure in cooler conditions, and drive into extremely hot conditions, the tires may become overinflated. However, the low tire pressure/ TPMS indicator will not come on if the tires are overinflated.

Refer to page 340 for tire inflation guidelines.

If there is a problem with the TPMS, this indicator begins to flash. It stops flashing after approximately 1 minute, then stays on. You will also see a “CHECK TPMS SYSTEM” message on the multi-information display (see TPMS System Failure).

Although your tire pressure is monitored, you must manually check the tire pressures monthly.

Each tire, including the spare, should be checked monthly when the vehicle is cold, and set to the recommended inflation pressure as specified on the vehicle placard and in the owner’s manual (see page 341).

TPMS System Failure

If there is a problem with the TPMS, you will see the above message on the multi-information display.

If you see this message, the system is off and is not monitoring the tire pressures. Have the system checked by your dealer as soon as possible.

Also, the low tire pressure/TPMS indicator begins to flash, then stays on (see page 291).

If the low tire pressure/TPMS indicator comes on, or the multi-information display shows a "CHECK TPMS SYSTEM" message, the VSA system automatically turns on even when the VSA system is turned off by pressing the VSA OFF switch (see page 296). If this happens, you cannot turn the VSA system off by pressing the VSA OFF switch again.

When you restart the vehicle with the compact spare tire, the TPMS system message will also be displayed on the multi-information display after several miles (kilometers) driving.

Changing a Tire with TPMS

If you have a flat tire, the low tire pressure/TPMS indicator will come on. Replace the flat tire with the compact spare tire (see page 351).

After the flat tire is replaced with the spare tire, the low tire pressure/ TPMS indicator stays on while driving. After several miles (kilometers) driving, this indicator begins to flash, then stays on again. You will also see a "CHECK TPMS SYSTEM" message on the multi-information display. This is normal; the system cannot monitor the spare tire pressure. Manually check the spare tire pressure to be sure it is correct.

This indicator and the warning message on the multi-information display will go off, after several miles (kilometers) driving, when the spare tire is replaced with the specified regular tire equipped with the tire pressure monitor sensor.

Each wheel (except the compact spare tire wheel) is equipped with a tire pressure sensor. You must use TPMS specific wheels. It is recommended that you always have your tires serviced by your dealer or qualified technician.

CONTINUED

Never use a puncture-repairing agent in a flat tire. If used, you will have to replace the tire pressure sensor. Have the flat tire repaired by your dealer as soon as possible.

As required by the FCC:
This device complies with Part 15 of the FCC rules. Operation is subject to the following two conditions: (1) This device may not cause harmful interference, and (2) this device must accept any interference received, including interference that may cause undesired operation.

Changes or modifications not expressly approved by the party responsible for compliance could void the user's authority to operate the equipment.

This device complies with Industry Canada Standard RSS-210.
Operation is subject to the following two conditions: (1) this device may not cause interference, and (2) this device must accept any interference that may cause undesired operation of the device.

The vehicle stability assist (VSA) system helps to stabilize the vehicle during cornering if the vehicle turns more or less than desired. It also assists you in maintaining traction while accelerating on loose or slippery road surfaces. It does this by regulating the engine's output and by selectively applying the brakes.

When VSA activates, you may notice that the engine does not respond to the accelerator in the same way it does at other times. There may also be some noise from the VSA hydraulic system. You will also see the VSA activation indicator blink.

The VSA system cannot enhance the vehicle's driving stability in all situations and does not control your vehicle's entire braking system. It is still your responsibility to drive and corner at reasonable speeds and to leave a sufficient margin of safety.

VSA OFF Indicator

When VSA is off, the VSA OFF indicator comes on as a reminder.

Vehicle Stability Assist (VSA) System Indicator

When VSA activates, you will see the VSA system indicator blink.

If this indicator comes on while driving, pull to the side of the road when it is safe, and turn off the engine. Reset the system by restarting the engine. If the VSA system indicator stays on or comes back on while driving, have the VSA system inspected by your dealer.

If the indicator does not come on when the ignition switch is turned to the ON (II) position, there may be a problem with the VSA system. Have your dealer inspect your vehicle as soon as possible.

The VSA system indicator will also come on when there is a problem in the hill start assist system. For more information, see page 297 .

NOTE: The main function of the VSA system is generally known as Electronic Stability Control (ESC). The system also includes a traction control function.

When the VSA system indicator comes on, you will also see a "CHECK VSA SYSTEM" or "CHECK HILL START ASSIST SYSTEM" message on the multi-information display.

On U.S. models
If the low tire pressure/TPMS indicator comes on (see page 291), or the multi-information display shows a “CHECK TPMS SYSTEM” message with the indicator flashing (see page 292), the VSA system automatically turns on even if the VSA system is turned off with the VSA OFF switch. In this case, you cannot turn the VSA system off by pressing the VSA OFF switch again.

Without VSA, your vehicle will have normal braking and cornering ability, but it will not have VSA traction and stability enhancement.

VSA OFF Switch

This switch is under the driver’s side vent. To turn the VSA system on and off, press and hold it until you hear a beep.

When VSA is off, the VSA activation indicator comes on as a reminder. Press and hold the switch again. It turns the system back on.

VSA is turned on every time you start the engine, even if you turned it off the last time you drove the vehicle.

In certain unusual conditions when your vehicle gets stuck in shallow mud or fresh snow, it may be easier to free it with the VSA temporarily switched off. When the VSA system is off, the traction control system is also off. You should only attempt to free your vehicle with the VSA off if you are not able to free it when the VSA is on.

Immediately after freeing your vehicle, be sure to switch the VSA on again. We do not recommend driving your vehicle with the VSA and traction control systems switched off.

VSA and Tire Sizes
Driving with varying tire or wheel sizes may cause the VSA to malfunction. When replacing tires, make sure they are of the same size and type as your original tires (see page 344).

If you install winter tires, make sure they are the same size as those that were originally supplied with your vehicle. Exercise the same caution during winter driving as you would if your vehicle was not equipped with VSA.

Hill Start Assist System
Your vehicle is equipped with a hill start assist feature to help prevent the vehicle from rolling on inclines as you move your foot from the brake pedal to the accelerator.

To activate hill start assist, you must come to a complete stop and make sure the shift lever is in any of D, S or L (either in D or S on models with the paddle shifters) when facing uphill, or reverse when facing downhill. Release the brake pedal. The brakes remain engaged briefly to keep the vehicle from rolling forward or backward while you move your foot from the brake pedal to the accelerator pedal. Gently apply the accelerator pedal as in normal driving. Hill start assist will release brake pressure gradually as you accelerate.

Hill start assist may not prevent your vehicle from rolling downhill on a very steep or slippery slope, and will not operate on small inclines.

Hill start assist is not a replacement for the parking brake. If parking your vehicle, ensure that the transmission is in Park, and the parking brake is fully applied before exiting the vehicle. You should also turn off the engine before exiting the vehicle.

The VSA system indicator will come on when there is a problem in the hill start assist system. With the VSA system indicator on, the hill start assist system will not activate.

Hill start assist will still operate even when VSA is switched off.

Your vehicle is not designed to tow a trailer. Attempting to do so can void your warranties.

This section explains why it is important to keep your vehicle well maintained and how to follow basic maintenance safety precautions.

This section also includes instructions on how to read the Maintenance Minder messages on the multi-information display, and instructions for simple maintenance tasks you may want to take care of yourself.

If you have the skills and tools to perform more complex maintenance tasks on your vehicle, you may want to purchase the service manual. See page 399 for information on how to obtain a copy, or see your dealer.

U.S. Vehicles:
Maintenance, replacement, or repair of emissions control devices and systems may be done by any automotive repair establishment or individual using parts that are "certified" to EPA standards.

Maintenance Safety 300
Maintenance Minder™ 301
Fluid Locations 311
Adding Engine Oil 312
Changing the Oil and Filter 314
Engine Coolant 317
Windshield Washers 319
Automatic Transmission Fluid 320
Continuously Variable Transmission (CVT) 320
Brake Fluid 321
Lights 323
Audio Antenna 333
Cleaning the Seat Belts 333
Floor Mats 333
Dust and Pollen Filter 334
Wiper Blades 334
Tires 340
Checking the 12 Volt Battery 346
Vehicle Storage 348

All service items not detailed in this section should be performed by a certified technician or qualified mechanic.

Important Safety Precautions
To eliminate potential hazards, read the instructions before you begin, and make sure you have the tools and skills required.

- Make sure your vehicle is parked on level ground, the parking brake is set, and the engine is off.
- To clean parts, use a commercially available degreaser or parts cleaner, not gasoline.
- To reduce the possibility of fire or explosion, keep cigarettes, sparks, and flames away from the battery and all fuel-related parts.
- Wear eye protection and protective clothing when working with the battery or compressed air.

⚠ WARNING

Improperly maintaining this vehicle or failing to correct a problem before driving can cause a crash in which you can be seriously hurt or killed.

Always follow the inspection and maintenance recommendations and schedules in this owner's manual.

Potential Vehicle Hazards
- **Carbon Monoxide poison from engine exhaust.** Be sure there is adequate ventilation whenever you operate the engine.
- **Burns from hot parts.** Let the engine and exhaust system cool down before touching any parts.
- **Injury from moving parts.** Do not run the engine unless instructed to do so.

⚠ WARNING

Failure to properly follow maintenance instructions and precautions can cause you to be seriously hurt or killed.

Always follow the procedures and precautions in this owner's manual.

Some of the most important safety precautions are given here. However, we cannot warn you of every conceivable hazard that can arise in performing maintenance. Only you can decide whether or not you should perform a given task.

Your vehicle displays engine oil life and maintenance service items on the multi-information display to show you when you should have your dealer perform engine oil replacement and indicated maintenance service.

Based on the engine operating conditions, the onboard computer in your vehicle calculates the remaining engine oil life and displays it as a percentage.

Engine Oil Life Display

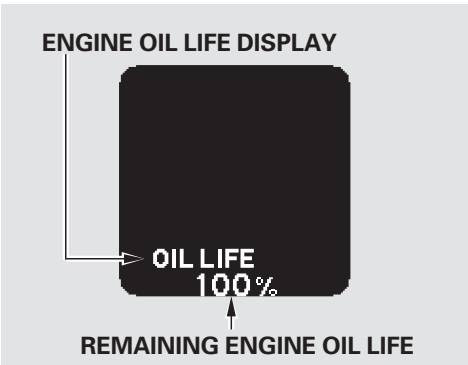

To see the current engine oil life displayed on the multi-information display, turn the ignition switch to the ON (II) position, and press the SEL/RESET button on the steering wheel repeatedly until the engine oil life is displayed.

The remaining engine oil life is shown on the display according to this table:

Calculated Engine Oil Life (%)	Displayed Engine Oil Life (%)
100% – 91%	100%
90% – 81%	90%
80% – 71%	80%
70% – 61%	70%
60% – 51%	60%
50% – 41%	50%
40% – 31%	40%
30% – 21%	30%
20% – 16%	20%
15% – 11%	15%
10% – 6%	10%
5% – 1%	5%
0%	0%

CONTINUED

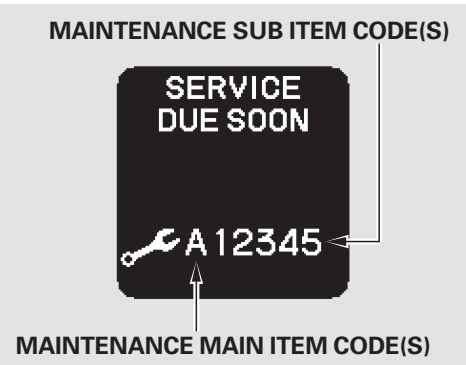

When the remaining engine oil life is 15 to 6 percent, the multi-information display shows a “SERVICE DUE SOON” message along with the maintenance item code(s) indicating the main and sub items required at the time of the oil change. Refer to page 310 for a complete list of the maintenance main items and sub items.

Pressing either INFO button (▲/▼) switches the display from the message to another display. Once you switch the display, this message will go off.

Along with the message, the system message indicator comes on (see page 70).

The message appears on the multi-information display each time you turn the ignition switch to the ON (II) position.

This message reminds you that your vehicle will soon be due for scheduled maintenance.

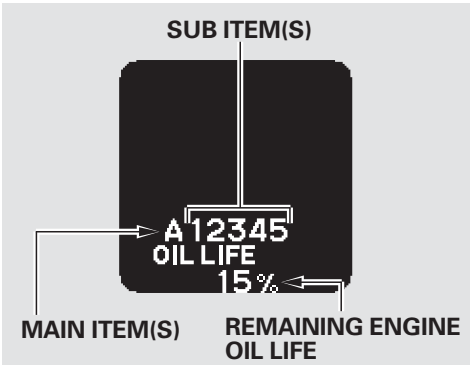

Press the SEL/RESET button on the steering wheel repeatedly to select the engine oil life information. Along with the “OIL LIFE” message, you will see the percentage of the remaining engine oil life and the maintenance item codes on the multi-information display.

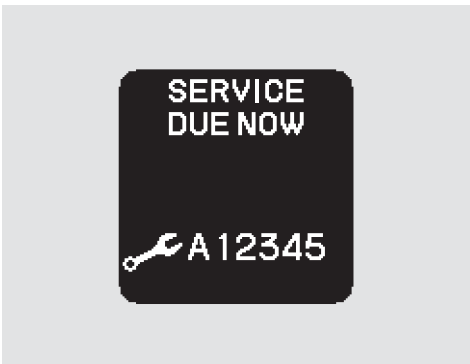

When the remaining oil life is 5 to 1 percent, the multi-information display shows a “SERVICE DUE NOW” message with the same maintenance items “SERVICE DUE SOON” was displayed with. When you see this message, have the indicated maintenance performed as soon as possible.

Pressing either INFO button (▲/▼) switches the display from the message to another display. Once you switch the display, this message will go off.

Along with the message, the system message indicator comes on (see page 70).

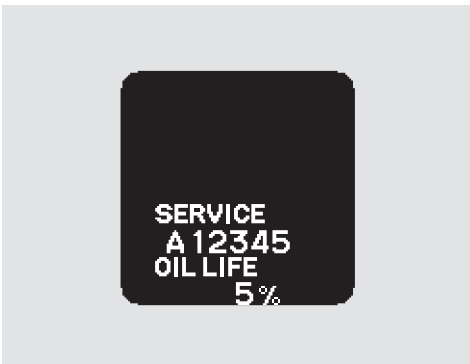

Press the SEL/RESET button on the steering wheel repeatedly to select the engine oil life. The message “SERVICE,” along with “5%,” and the maintenance item code are displayed on the multi-information display when the calculated engine oil life is 1—5 percent (see page 301).

CONTINUED

If the indicated maintenance service is not done and the remaining engine oil life reaches 0%, the multi-information display will show the message “SERVICE PAST DUE” and the maintenance item code(s). This message is displayed when the total distance traveled is less than 10 miles (for U.S. models) or 10 km (for Canadian models) after the engine oil life became 0%.

These messages will come on every time you turn the ignition switch to the ON (II) position.

Immediately have the service performed, and make sure to reset the display as described on page 306 .

Pressing either INFO button (▲/▼) switches the display from the message to another display. To see the message again, press either INFO button repeatedly.

Along with the message, the system message indicator comes on (see page 70).

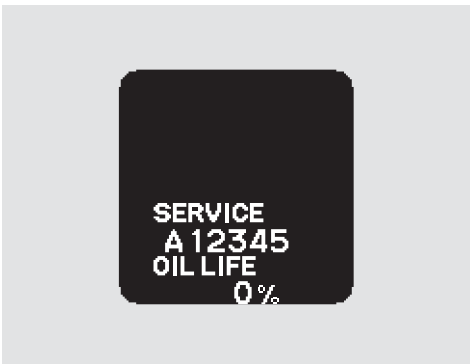

Press the SEL/RESET button on the steering wheel repeatedly to select the engine oil life. The message “SERVICE,” along with “0%,” and the maintenance item code are displayed on the multi-information display when the calculated engine oil life is 0—1 percent.

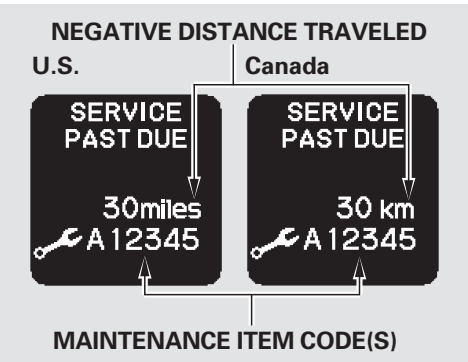

If the indicated required service is not done and the remaining engine oil life becomes 0%, the multi-information display will show a "SERVICE PAST DUE" message, the total distance traveled after the remaining oil life became 0%, and the maintenance item code(s).

This message is displayed again when you drive over 10 miles (for U.S. models) or 10 km (for Canadian models) after seeing the 0% message.

Immediately have the service performed, and make sure to reset the display as described on page 306 .

Pressing either INFO button (▲/▼) switches the display from the message to another display. To see the message again, press either INFO button repeatedly.

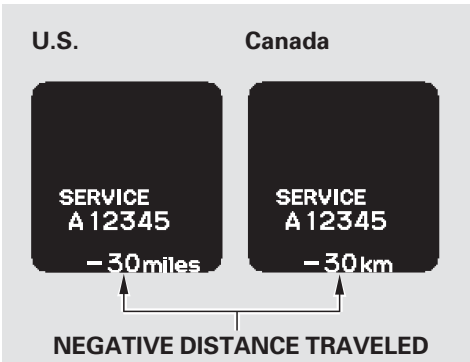

When you press the SEL/RESET button to select the engine oil life, the message "SERVICE," along with the maintenance item code(s) and the total negative distance traveled after the oil life became 0%, will be displayed on the multi-information display.

Maintenance Main Items and Sub Items

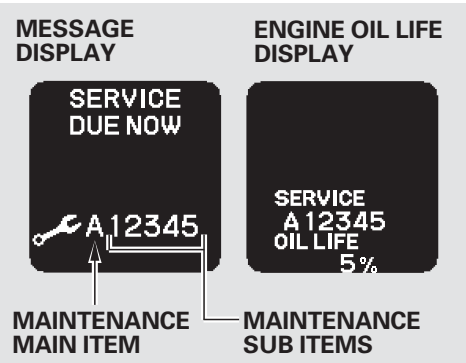

All the maintenance items displayed in the multi-information display are in code.

For an explanation of the maintenance codes, see page 310 .

Resetting the Engine Oil Life Display

Your dealer will reset the display after completing the required maintenance service. You will see “OIL LIFE 100%” on the display the next time you turn the ignition switch to the ON (II) position.

If maintenance service is done by someone other than your dealer, reset the Maintenance Minder as follows:

1. Turn the ignition switch to the ON (II) position.

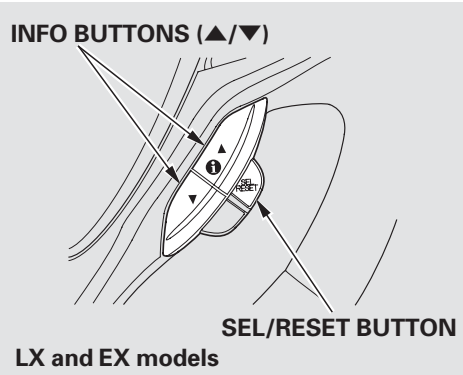

2. If the engine oil life is not displayed, press the SEL/RESET button on the steering wheel repeatedly.

3. Press and hold the SEL/RESET button on the steering wheel for more than 10 seconds. The remaining engine oil life reset mode will be shown on the multi-information display.

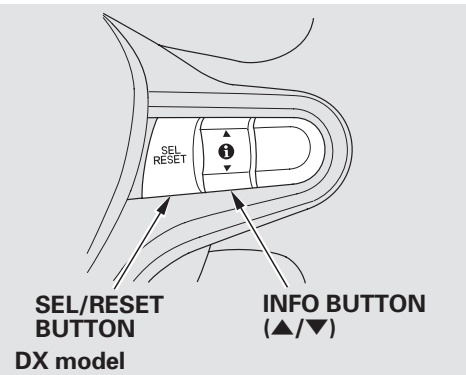

4. Select “RESET” by pressing the INFO (▲/▼) button, then press the SEL/RESET button to reset the engine oil life display. The maintenance item code(s) will disappear, and the engine oil life will reset to “100.” If you want to cancel the oil life reset mode, select “CANCEL.”

Important Maintenance Precautions

If you have the required service done but do not reset the display, or reset the display without doing the service, the system will not show the correct maintenance intervals. This can lead to serious mechanical problems because you will no longer have an accurate record of when maintenance is needed.

CONTINUED

Your authorized Honda dealer knows your vehicle best and can provide competent, efficient service.

However, service at a dealer is not mandatory to keep your warranties in effect. Maintenance may be done by any qualified service facility or person who is skilled in this type of automotive service. Make sure to have the service facility or person reset the display as previously described. Keep all receipts as proof of completion, and have the person who does the work fill out your Honda Service History or Canadian Maintenance Log. Check your warranty booklet for more information.

We recommend using Honda parts and fluids whenever you have maintenance done. These are manufactured to the same high quality standards as the original components, so you can be confident of their performance and durability.

U.S. Vehicles:
According to state and federal regulations, failure to perform maintenance on the items marked with # will not void your emissions warranties. However, all maintenance services should be performed in accordance with the intervals indicated by the multi-information display.

Owner's Maintenance Checks
You should check the following items at the specified intervals. If you are unsure of how to perform any check, turn to the appropriate page listed.

- Engine oil level — Check every time you fill the fuel tank. See page 251 .
- Engine coolant level — Check the radiator reserve tank every time you fill the fuel tank. See page 252 .
- Automatic transmission — Check the fluid level monthly. See page 320 .
- Brakes — Check the fluid level monthly. See page 321 .
- Tires — Check the tire pressure monthly. Examine the tread for wear and foreign objects. See page 340 .
- Lights — Check the operation of all the lights monthly. See page 323 .

CONTINUED

Maintenance Minder™

Symbol	Maintenance Main Items
A	• Replace engine oil*

B	• Replace engine oil* and oil filter
	• Inspect front and rear brakes
	• Check parking brake adjustment
	• Inspect these items:
	  • Tie rod ends, steering gear box, and boots
	  • Suspension components
	  • Driveshaft boots
	  • Brake hoses and lines (including ABS/VSA)
	  • All fluid levels and condition of fluids
	  • Exhaust system#
	  • Fuel lines and connections#

* : If the message ''SERVICE'' does not appear more than 12 months after the display is reset, change the engine oil every year.

: See information on maintenance and emissions warranty in the first column on page 309 .

NOTE:
- Independent of the Maintenance Minder information, replace the brake fluid every 3 years.
- Inspect idle speed every 160,000 miles (256,000 km).
- Adjust the valves during services A, B, 1, 2, or 3 if they are noisy.

Symbol	Maintenance Sub Items
1	• Rotate tires

2	• Replace air cleaner element
	  If you drive in dusty conditions, replace every 15,000 miles (24,000 km).
	• Replace dust and pollen filter
	  If you drive primarily in urban areas that have high concentrations of soot in the air from industry and from diesel-powered vehicles, replace every 15,000 miles (24,000 km).
	• Inspect drive belt

3	• Replace transmission fluid
4	• Replace spark plugs • Inspect valve clearance
5	• Replace engine coolant

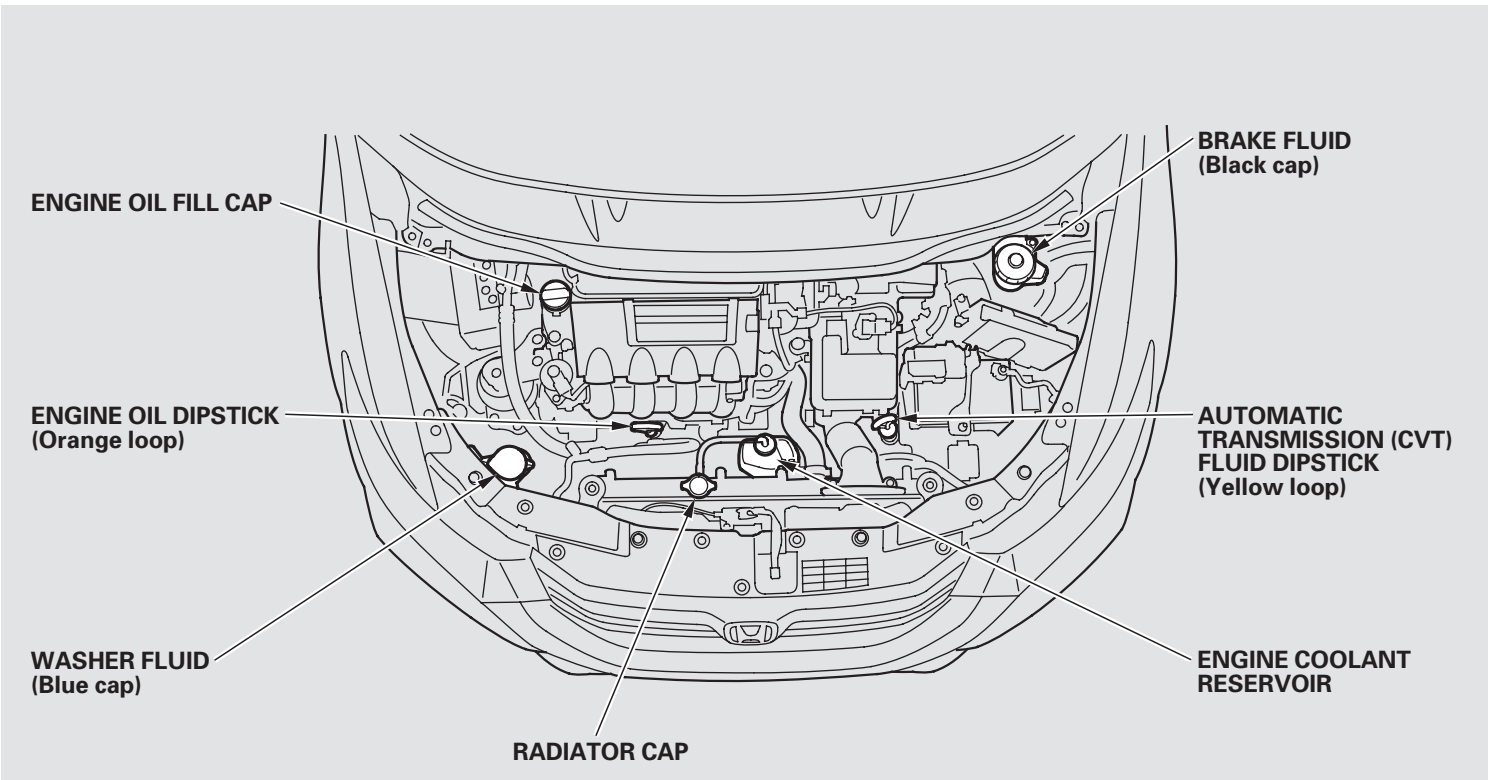
ENGINE OIL FILL CAP
ENGINE OIL DIPSTICK
(Orange loop)
WASHER FLUID
(Blue cap)
RADIATOR CAP
BRAKE FLUID
(Black cap)
AUTOMATIC
TRANSMISSION (CVT)
FLUID DIPSTICK
(Yellow loop)
ENGINE COOLANT
RESERVOIR

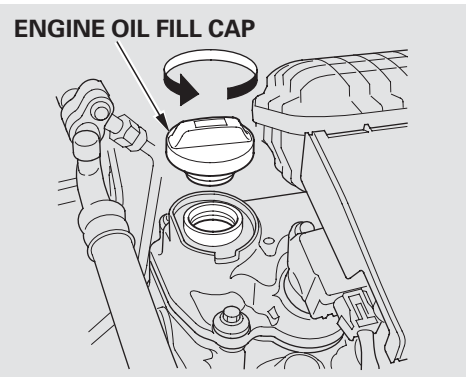

Unscrew and remove the engine oil fill cap on the valve cover. Pour the oil slowly and carefully so you do not spill any. Clean up any spills immediately. Spilled oil could damage components in the engine compartment.

Reinstall the engine oil fill cap, and tighten it securely. Wait a few minutes, and recheck the oil level on the engine oil dipstick. Do not fill above the upper mark; you could damage the engine.

Recommended Engine Oil

Oil is a major contributor to your engine's performance and longevity. Always use a premium-grade 0W-20 detergent oil displaying the API Certification Seal. This seal indicates the oil is energy conserving, and that it meets the American Petroleum Institute's latest requirements.

API CERTIFICATION SEAL

Honda Motor Oil is the preferred 0W-20 lubricant for your vehicle. It is highly recommended that you use Honda Motor Oil in your vehicle for optimum engine protection. Make sure the API Certification Seal says “For Gasoline Engines”.

The oil viscosity or weight is provided on the container’s label.

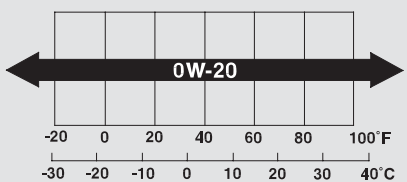

Ambient Temperature

A very low-viscosity, fuel-efficient 0W-20 oil is the engine lubricant for your Insight. This oil is formulated to help your engine use less fuel.

Synthetic Oil

You may use a synthetic motor oil if it meets the same requirements given for a conventional motor oil: it displays the API Certification Seal and it is the proper weight. You must follow the oil and filter change intervals shown on the multi-information display.

Engine Oil Additives

Your vehicle does not require any oil additives. Additives may adversely affect the engine or transmission performance and durability.

Changing the Oil and Filter

Always change the oil and filter according to the maintenance messages shown on the multi-information display. The oil and filter collect contaminants that can damage your engine if they are not removed regularly.

Changing the oil and filter requires special tools and access from underneath the vehicle. The vehicle should be raised on a service station-type hydraulic lift for this service. Unless you have the knowledge and proper equipment, you should have this maintenance done by a skilled mechanic.

1. Run the engine until it reaches normal operating temperature, then shut it off.

2. Open the hood, and remove the engine oil fill cap.

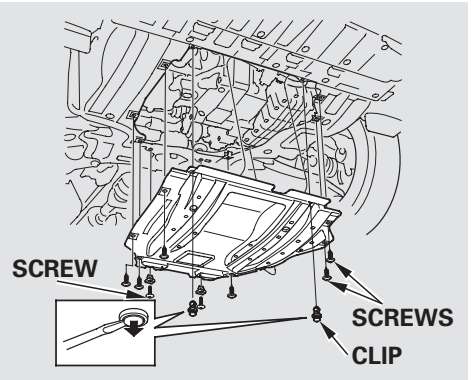

3. Remove the screws with a Phillips-head screwdriver, and clips with a flat-tip screwdriver, then pull the under-cover down.

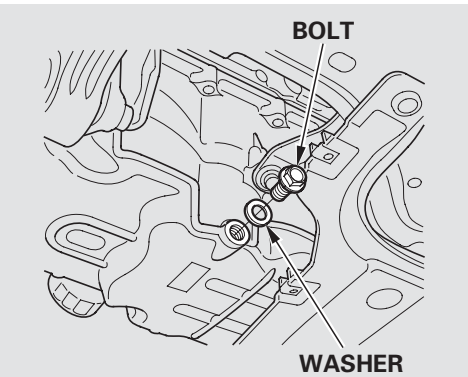

4. Remove the oil drain bolt and washer from the bottom of the engine. Drain the oil into an appropriate container.

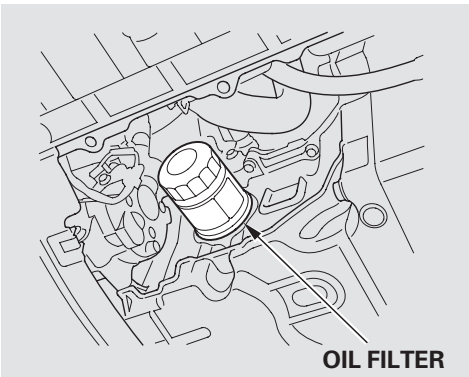

5. Remove the oil filter, and let the remaining oil drain. A special wrench (available from your dealer) is required.

   Make sure the oil filter gasket is not stuck to the contacting surface of the engine. If it is, remove it before installing a new oil filter.

6. Install a new oil filter according to the instructions that come with it. Make sure to clean off any dirt and dust on the contacting surface of a new oil filter.

7. Put a new washer on the drain bolt, then reinstall the drain bolt. Tighten the drain bolt to:

   29 lbf·ft (39 N·m , 4.0 kgf·m)

8. Refill the engine with the recommended oil.

   Engine oil change capacity (including filter):

   3.4 US qt (3.2 ℓ)

CONTINUED

9. Reinstall the engine oil fill cap. Start the engine. The oil pressure indicator should go out within 5 seconds. If it does not, turn off the engine, and check your work.

10. Let the engine run for several minutes, then check the drain bolt and oil filter for leaks.

11. Turn off the engine, let it sit for several minutes, then check the oil level on the dipstick. If necessary, add more oil.

12. Put the under-cover back in place and reinstall the holding clips and screws. Lock the clips securely by pushing on the center of each clip.

NOTICE

Improper disposal of engine oil can be harmful to the environment. If you change your own oil, please dispose of the used oil properly. Put it in a sealed container and take it to a recycling center. Do not discard it in a trash bin or dump it on the ground.

Adding Engine Coolant

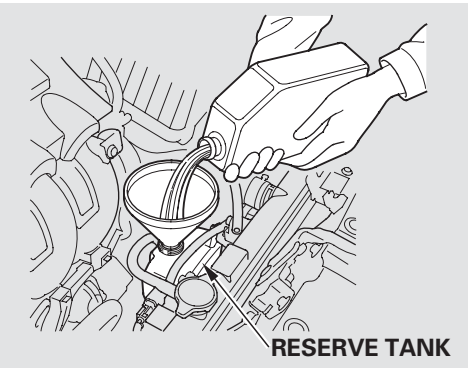

If the coolant level in the reserve tank is at or below the MIN line, add coolant to bring it up to between the MIN and MAX lines. Inspect the cooling system for leaks.

Always use Honda Long-life Antifreeze/Coolant Type 2. This coolant is pre-mixed with 50 percent antifreeze and 50 percent distilled water. Never add straight antifreeze or plain water.

If Honda antifreeze/coolant is not available, you may use another major-brand non-silicate coolant as a temporary replacement. Make sure it is a high-quality coolant recommended for aluminum engines. Continued use of any non-Honda coolant can result in corrosion, causing the cooling system to malfunction or fail. Have the cooling system flushed and refilled with Honda antifreeze/coolant as soon as possible.

NOTICE

If you regularly drive your vehicle under severe conditions in very low temperature (under −31°F, −35°C), a higher concentration of coolant should be used. Consult your Honda dealer for more information on the proper coolant.

CONTINUED

If the reserve tank is completely empty, you should also check the coolant level in the radiator.

⚠ WARNING

Removing the radiator cap while the engine is hot can cause the coolant to spray out, seriously scalding you.

Always let the engine and radiator cool down before removing the radiator cap.

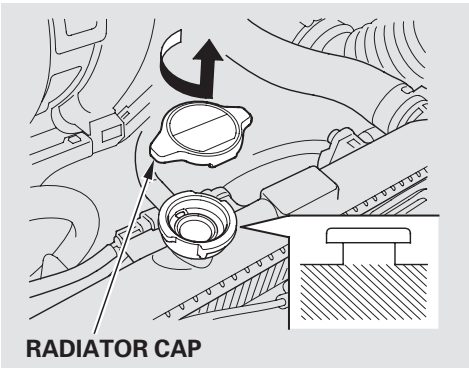

1. Make sure the engine and radiator are cool.

2. Relieve any pressure in the cooling system by turning the radiator cap counterclockwise, without pressing down.

3. Remove the radiator cap by pushing down and turning counterclockwise.

4. The coolant level should be up to the base of the filler neck. Add coolant if it is low.

   Pour the coolant slowly and carefully so you do not spill any. Clean up any spill immediately; it could damage components in the engine compartment.

5. Put the radiator cap back on, and tighten it fully.

6. Pour coolant into the reserve tank. Fill it to halfway between the MAX and MIN marks. Put the cap back on the reserve tank.

Do not add any rust inhibitors or other additives to your vehicle's cooling system. They may not be compatible with the coolant or engine components.

Check the fluid level in the windshield washer reservoir at least monthly during normal use.

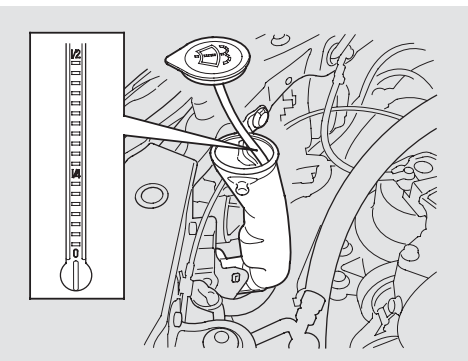

On U.S. models
Check the fluid level by removing the cap and looking at the level gauge.

On all Canadian models
If the washer fluid is low, a "WASHER FLUID LOW" message appears on the multi-information display.

Fill the reservoir with a good-quality windshield washer fluid. This increases the cleaning capability and prevents freezing in cold weather.

When you refill the reservoir, clean the edges of the windshield wiper blades with windshield washer fluid on a clean cloth. This will help to condition them.

NOTICE

Do not use engine antifreeze or a vinegar/water solution in the windshield washer reservoir. Antifreeze can damage your vehicle's paint, while a vinegar/water solution can damage the windshield washer pump. Use only commercially-available windshield washer fluid.

Continuously Variable Transmission (CVT)
Check the fluid level with the engine at normal operating temperature.

1. Park the vehicle on level ground. Start the engine, let it run until the radiator fan comes on, then shut off the engine. For accurate results, wait about 60 seconds (but no longer than 90 seconds) before doing step 2.

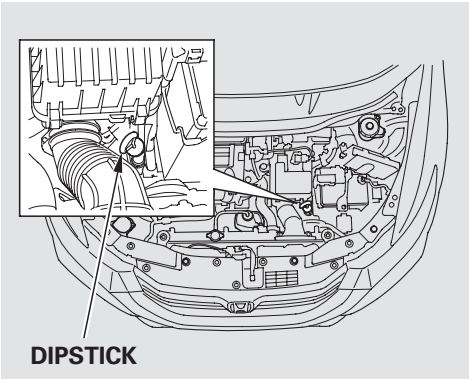

2. Remove the dipstick (yellow loop) from the transmission, and wipe it with a clean cloth.

3. Insert the dipstick all the way into the transmission securely as shown in the illustration.

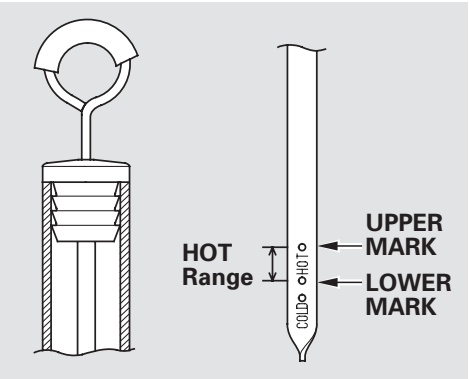

4. Remove the dipstick and check the fluid level. There is a HOT side and a COLD side on the dipstick. The fluid level should be between the upper and lower marks on the HOT side.

5. If the level is below the lower mark, add fluid into the dipstick hole to bring it to the level between the upper and lower marks.

   Pour the fluid slowly and carefully so you do not spill any. Clean up any spill immediately; it could damage components in the engine compartment.

   Always use Honda CVTF (continuously variable transmission fluid).

6. Insert the dipstick all the way back into the transmission securely.

The transmission should be drained and refilled with new fluid when this service is indicated by a maintenance message on the multi-information display.

If you are not sure how to add fluid, contact your dealer.

Brake Fluid
Check the brake fluid level in the reservoirs monthly.

You will also see the “BRAKE FLUID LOW” message on the multi-information display when the brake fluid level is low.

Independent of the Maintenance Minder information, replace the brake fluid every 3 years.

CONTINUED

Always use Honda Heavy Duty Brake Fluid DOT 3. If it is not available, you should use only DOT 3 or DOT 4 fluid, from a sealed container, as a temporary replacement.

Using any non-Honda brake fluid can cause corrosion and decrease the life of the system. Have the brake system flushed and refilled with Honda Heavy Duty Brake Fluid DOT 3 as soon as possible.

Brake fluid marked DOT 5 is not compatible with your vehicle's braking system and can cause extensive damage.

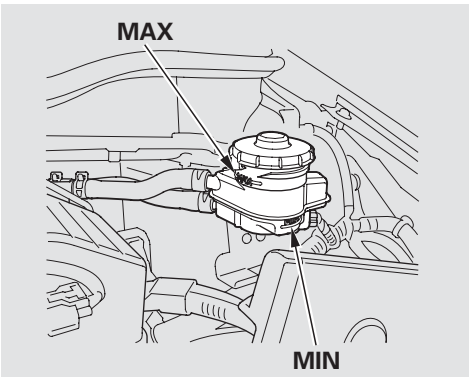

The fluid level should be between the MIN and MAX marks on the side of the reservoir. If the level is at or below the MIN mark, your brake system needs attention. Have the brake system inspected for leaks or worn brake pads.

Headlight Aiming

The headlights were properly aimed when your vehicle was new. If you regularly carry heavy items in the cargo area, readjustment may be required. Adjustments should be done by your dealer or another qualified technician.

Replacing a Headlight Bulb

Your vehicle has halogen headlight bulbs. When replacing a bulb, handle it by its base, and protect the glass from contact with your skin or hard objects. If you touch the glass, clean it with denatured alcohol and a clean cloth.

NOTICE

Halogen headlight bulbs get very hot when lit. Oil, perspiration, or a scratch on the glass can cause the bulb to overheat and shatter.

High Beam Headlight

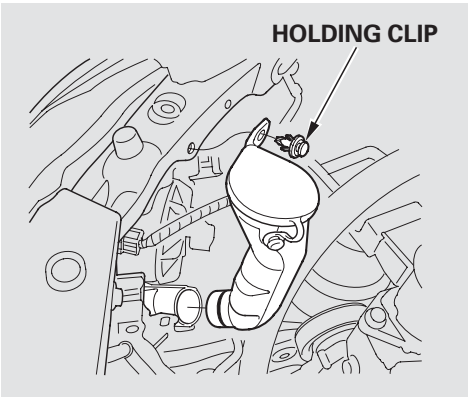

1. Open the hood.
   To change the bulb on the right side, remove the upper part of the windshield washer reservoir tank. Use a flat-tip screwdriver to remove the holding clip, then remove the upper part by pulling it straight up.

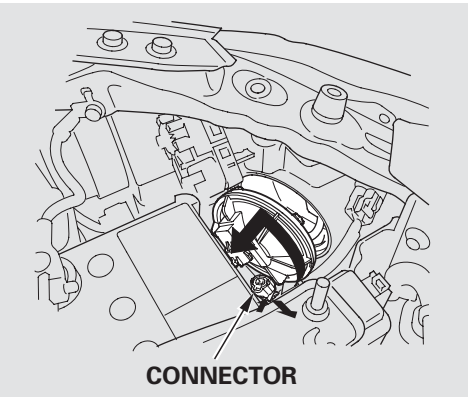

2. Remove the electrical connector from the cover by pushing on the tab to unlock it, then slide the connector off the cover.

3. Remove the cover on the back of the headlight assembly by turning it counterclockwise.

CONTINUED

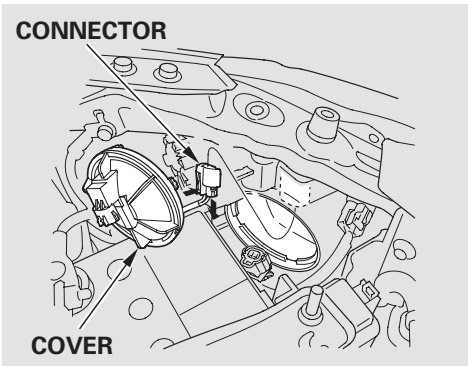

4. Remove the electrical connector from the bulb by pushing on the tab and pulling the connector down.

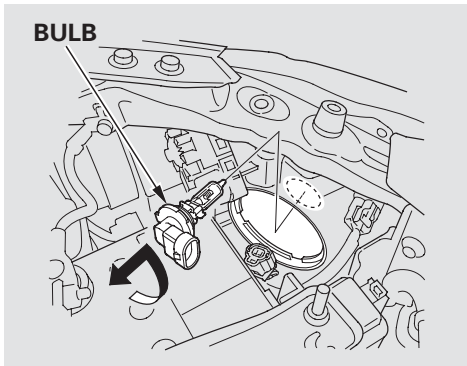

5. Remove the bulb from the headlight assembly by turning it one-quarter turn counterclockwise.

6. Install the new bulb, and turn it one-quarter turn clockwise to lock it in place.

7. Push the electrical connector back onto the bulb. Make sure it is on all the way.

8. Reinstall the cover over the back of the headlight assembly and turn it clockwise to lock it in place. Push the electrical connector back onto the cover.

9. Turn on the headlights to test the new bulb.

(Right side)

10. Install the upper part of the windshield washer reservoir tank in the reverse order of removal.

Low Beam Headlight

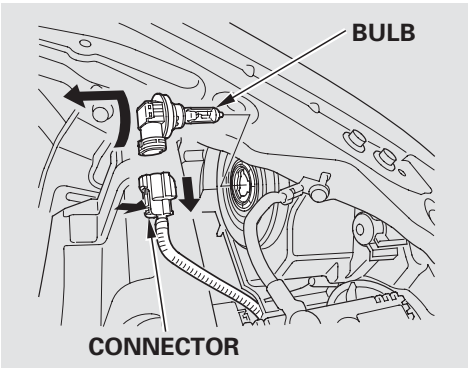

1. Open the hood.

2. Remove the electrical connector from the bulb by pushing on the tab and pulling the connector down.

3. Remove the bulb from the headlight assembly by turning it one-quarter turn counterclockwise.

4. Install the new bulb, and turn it one-quarter turn clockwise to lock it in place.

5. Push the electrical connector back onto the bulb. Make sure it is on all the way.

6. Turn on the headlights to test the new bulb.

Replacing a Front Parking Light Bulb

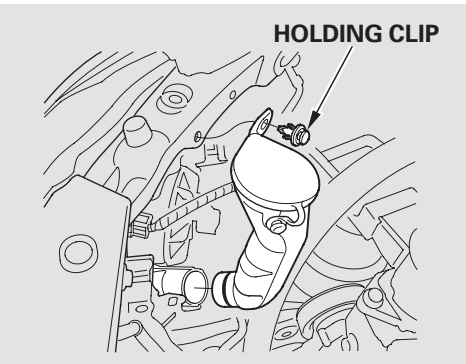

1. Open the hood.
   To change the bulb on the right side, remove the upper part of the windshield washer reservoir tank. Use a flat-tip screwdriver to remove the holding clip, then remove the upper part by pulling it straight up.

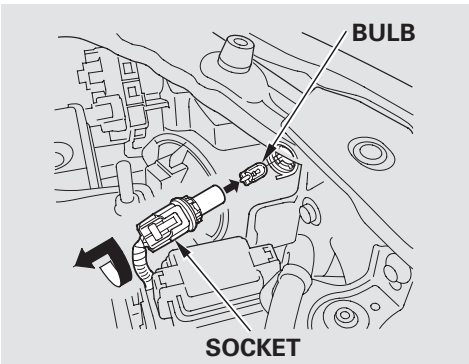

2. Remove the socket from the headlight assembly by turning it one-quarter turn counterclockwise.

3. Pull the bulb straight out of its socket. Push the new bulb straight into the socket until it bottoms.

4. Install the socket back into the headlight assembly. Turn it clockwise to lock it in place.

5. Turn on the lights to make sure the new bulb is working.

   (Right side)
6. Install the upper part of the windshield washer reservoir tank in the reverse order of removal.

Replacing the Front Turn Signal Light Bulb

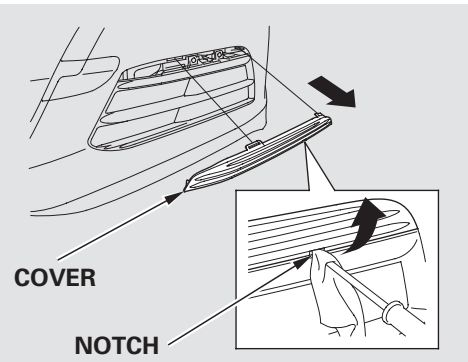

1. Place a cloth on the notch of the light assembly garnish to prevent scratches. Remove the cover by carefully prying in the notch with a flat-tip screwdriver.

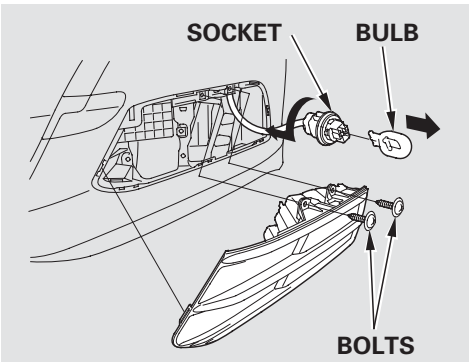

2. Remove the bolts and pull the front turn signal light assembly from the bumper while taking the tab out from the holder.

3. Remove the socket from the front turn signal light assembly by turning it one-quarter turn counterclockwise.

4. Pull the bulb straight out of its socket. Push the new bulb straight into the socket until it bottoms.

5. Insert the socket back into the front turn signal light assembly. Turn it clockwise to lock it in place.

6. Turn on the lights to make sure the new bulb is working.

7. Install the light assembly in the reverse order of removal. Make sure to secure the bolts.

8. Install the garnish in the original position securely.

Replacing a Front Side Marker Light Bulb

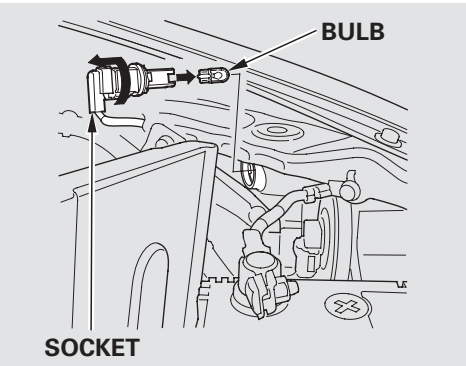

1. Open the hood.

2. Remove the socket from the headlight assembly by turning it one-quarter turn counterclockwise.

3. Pull the bulb straight out of its socket. Push the new bulb straight into the socket until it bottoms.

4. Install the socket back into the headlight assembly. Turn it clockwise to lock it in place.

5. Turn on the lights to make sure the new bulb is working.

Replacing the Rear Bulbs

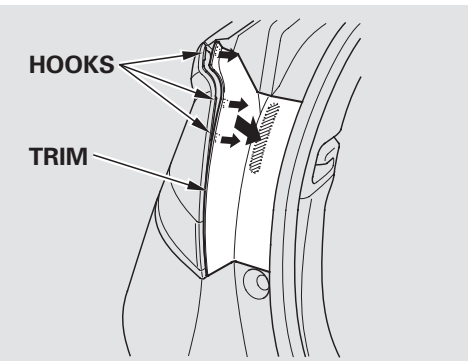

1. Open the hatch.

2. Push on the area of the trim as shown in the illustration above to detach the upper hooks from the light assembly.

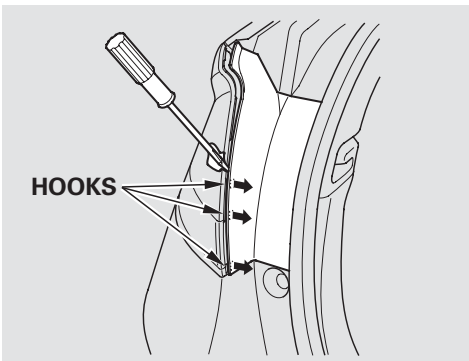

3. Pry on the gap between the trim and light assembly carefully with a flat-tip screwdriver to detach the lower hooks.

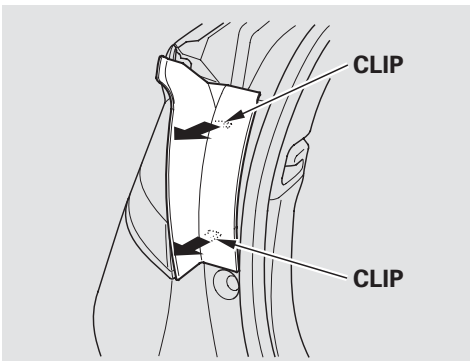

4. Make sure that all hooks are removed from the light assembly. Unclip the top half of the trim from the body by pulling it out. Then unclip the bottom half.

CONTINUED

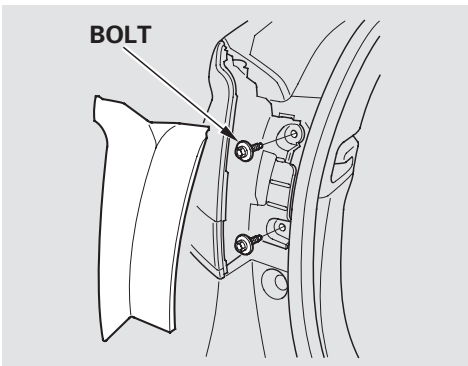

5. Remove the two mounting bolts with an 8 mm wrench.

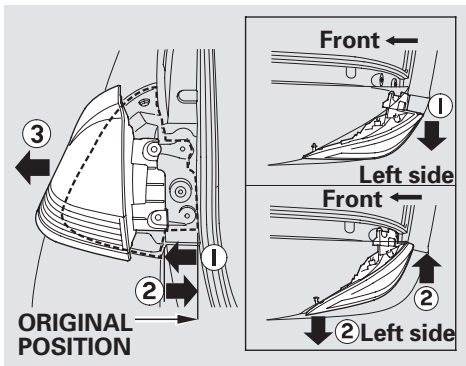

6. Pull the rear of the light assembly out as shown in the illustration above (①), then push the assembly back to the original position carefully (②). The front part of the rear light assembly raises slightly (③).

7. Determine which of the three bulbs is burned out: back-up light, turn signal, or side marker.

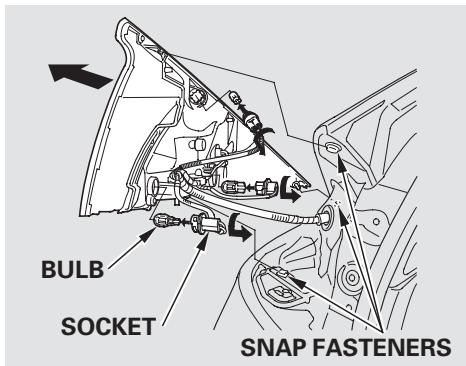

8. Pull the whole light assembly outwards from the body carefully.

9. Remove the socket by turning it one-quarter turn counterclockwise.

10. Remove the burned out bulb by pulling it straight out of its socket.

11. Install the new bulb in the socket by pushing it straight in the socket until it bottoms.

12. Reinstall the socket into the light assembly. Turn it clockwise to lock it in place.

13. Test the lights to make sure the new bulb is working.

14. When reinstalling the taillight assembly, align and pop the snap fasteners in place. Reinstall and tighten the two mounting bolts.

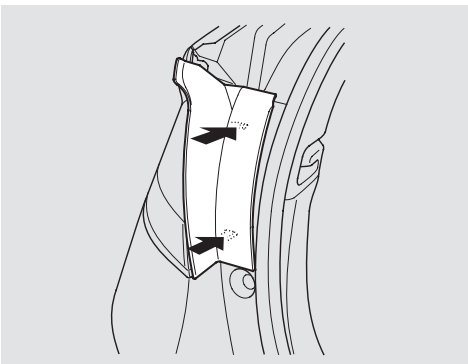

15. To reinstall the trim, set the bottom edge of the trim in the original position and push the bottom half of the trim to clip it back securely. Then push the upper half of the trim to secure the top clip.

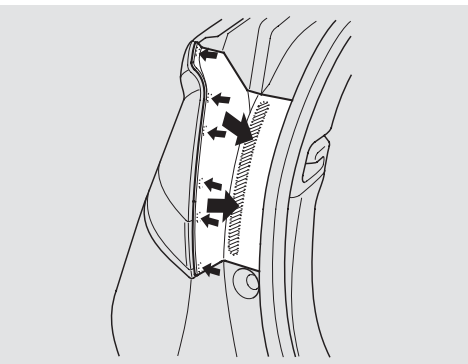

16. Secure the hooks by pushing on the areas of the trim as shown in the illustration above.

Stop/taillights
The stop/taillights should be replaced by your dealer.

Side Turn Signal Lights
EX models
Each outside mirror has side turn signal lights. The lights should be replaced by your dealer.

Rear License Plate Light Bulbs
The license plate has two lights above it. The bulbs should be replaced by your dealer.

High-mount Brake Light
The high-mount brake light should be replaced by your dealer.

Audio Antenna

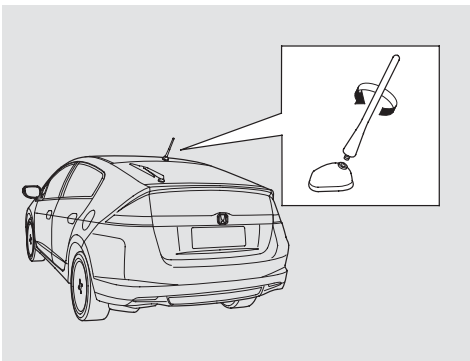

Before using an automatic car wash, remove the audio antenna so it does not get damaged. Remove the antenna by unscrewing it. When you reinstall the antenna, tighten it securely.

Before entering or parking in areas with low ceiling height, remove the antenna.

Cleaning the Seat Belts

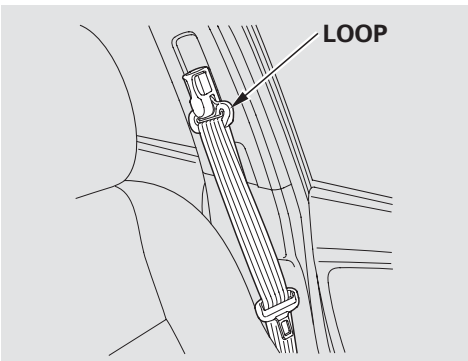

If your seat belts get dirty, use a soft brush with a mixture of mild soap and warm water to clean them. Do not use bleach, dye, or cleaning solvents. Let the belts air dry before you use the vehicle.
Dirt build-up in the loops of the seat belt anchors can cause the belts to retract slowly. Wipe the insides of the loops with a clean cloth dampened in mild soap and warm water or isopropyl alcohol.

Floor Mats

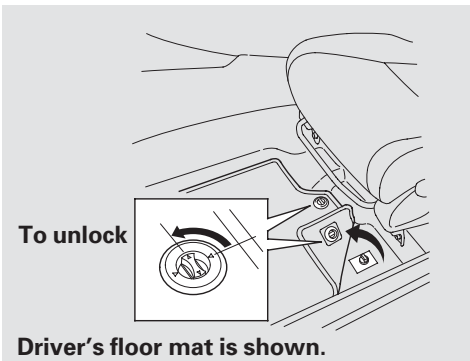

Driver's floor mat is shown.

On LX and EX models
The driver's floor mat that came with your vehicle hooks over the floor mat anchors. To lock each anchor, turn the knob clockwise. This keeps the floor mat from sliding forward and possibly interfering with the pedals.

When cleaning or replacing, turn the knob counterclockwise to unhook the floor mat.

CONTINUED

If you remove a floor mat, make sure to re-anchor it when you put it back in your vehicle.

If you use a non-Honda floor mat, make sure it fits properly and that it can be used with the floor mat anchors. Do not put additional floor mats on top of the anchored mats.

Make sure the rear floor mats are properly positioned. If not, the floor mat will interfere with the seat operation and make the front passenger's weight sensors ineffective.

Dust and Pollen Filter
This filter removes the dust and pollen that is brought in from the outside through the climate control system.

Have your dealer replace the filter when this service is indicated by a maintenance message on the multi-information display. It should be replaced every 15,000 miles (24,000 km) if you drive primarily in urban areas that have high concentrations of soot in the air, or if the flow from the climate control system becomes less than usual.

Wiper Blades
Check the condition of the wiper blades at least every 6 months. Replace them if you find signs of cracking in the rubber, and areas that are getting hard or if they leave streaks and unwiped areas when used.

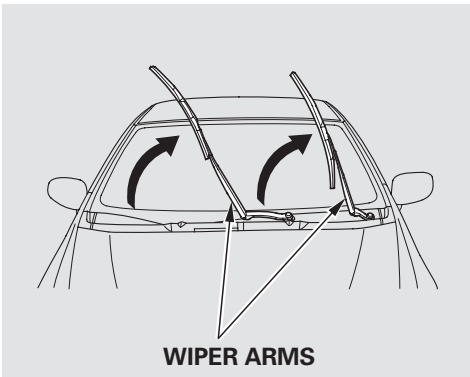

To replace a wiper blade:

1. Raise each wiper arm off the windshield, lifting the driver's side first, then the passenger's side.

NOTICE

Do not open the hood when the wiper arms are raised, or you will damage the hood and wiper arms.

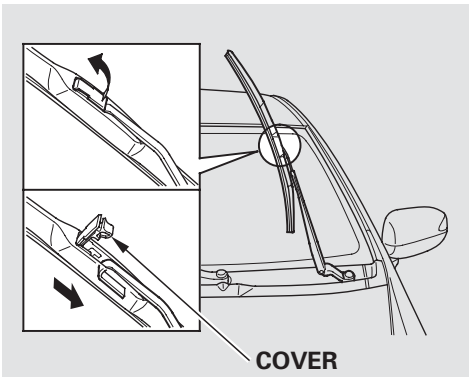

2. Disconnect the blade assembly from the wiper arm:

   - Put a cloth on the edge of the lock tab to prevent scratches, then push up on the lock tab carefully with a flat-tip screwdriver.

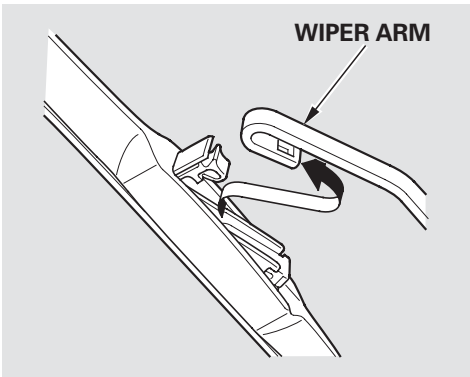

   - Pivot the blade assembly toward the wiper arm until it releases from the wiper arm.

When replacing a wiper blade, make sure not to drop the wiper blade or wiper arm down on the windshield.

CONTINUED

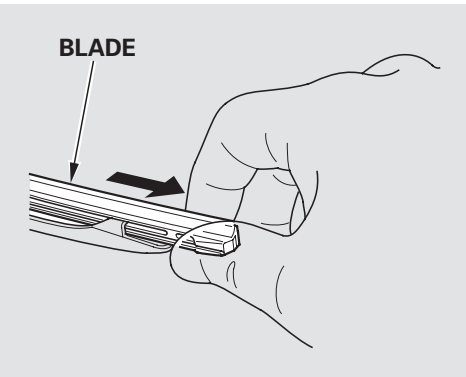

3. Remove the blade from its holder by grabbing the tabbed end of the blade. Pull firmly until the tabs come out of the holder.

4. Examine the new wiper blades. If they have no plastic or metal reinforcement along the back edge, remove the metal reinforcement strips from the old wiper blade, and install them in the slots along the edge of the new blade.

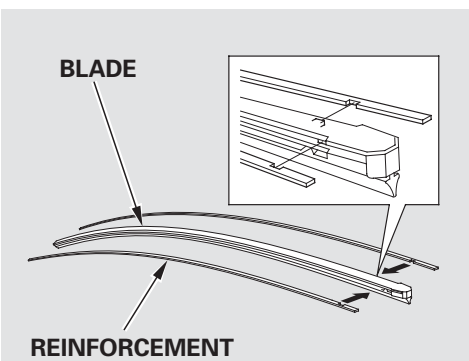

Make sure the two rubber tabs inside the blade fit to each notch of the reinforcement, as shown.

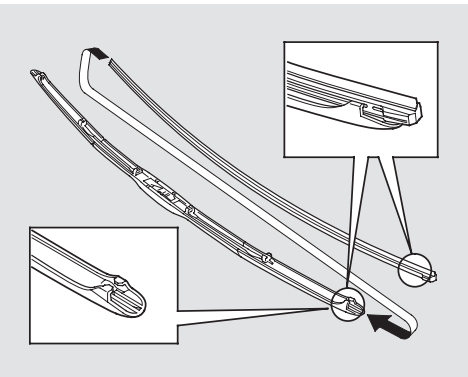

5. Place the top of the wiper blade on the end of the blade assembly, and slide the blade onto the assembly. Make sure the blade is completely installed.

6. Slide the wiper blade assembly onto the wiper arm. Make sure it locks in place.

7. Make sure the blade is completely installed and that its edge is not bunched up.

8. Lower the wiper arm down against the windshield, the passenger's side first, then the driver's side.

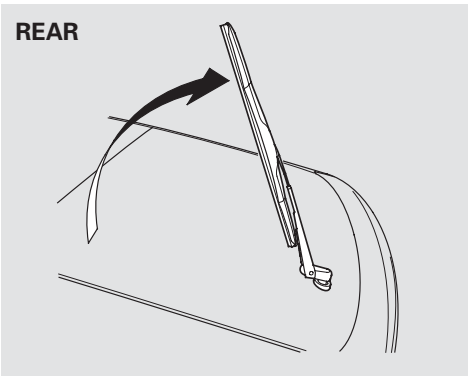

To replace a rear wiper blade:

1. Raise the wiper arm off the rear window.

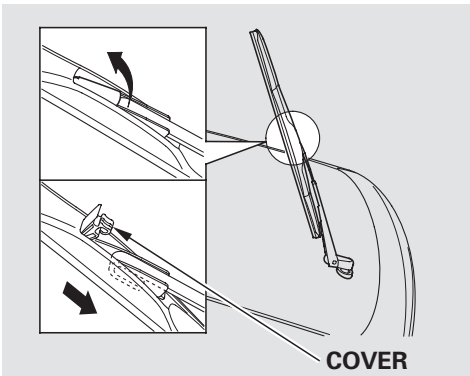

2. Disconnect the blade assembly from the wiper arm by pulling up the cover.

CONTINUED

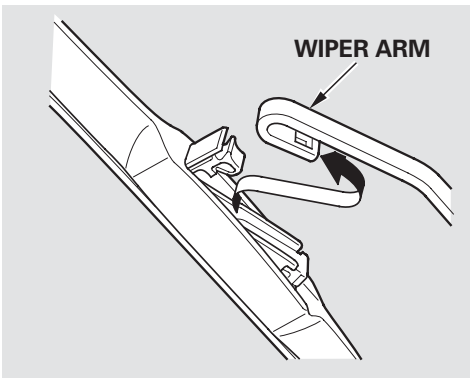

3. Push the blade assembly toward the base of the arm.

   When replacing a wiper blade, make sure not to drop the wiper blade or wiper arm down on the windshield.

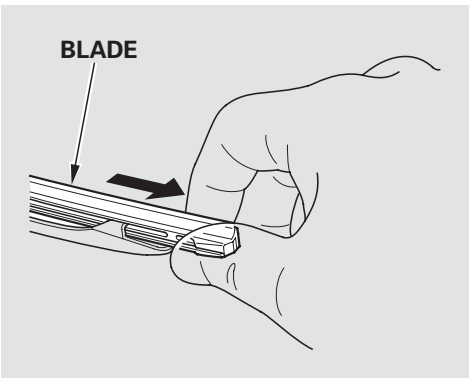

4. Remove the blade from its holder by grabbing the tabbed end of the blade. Pull firmly until the tabs come out of the holder.

5. Examine the new wiper blades. If they have no plastic or metal reinforcement along the back edge, remove the metal reinforcement strips from the old wiper blade, and install them in the slots along the edge of the new blade.

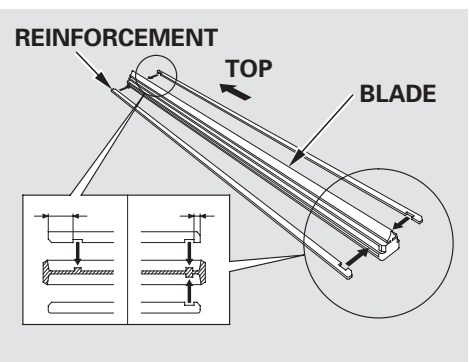

Make sure the two rubber tabs inside the blade fit to each notch of the reinforcement, as shown.

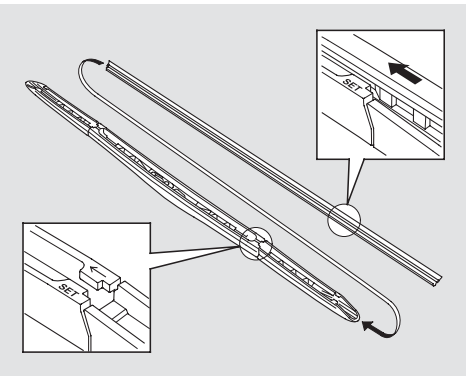

6. Place the top of the wiper blade on the end of the blade assembly, and slide the blade onto the assembly. Make sure the blade is completely installed.

7. Slide the wiper blade assembly onto the wiper arm. Make sure it locks in place.

8. Make sure the blade is completely installed and that its edge is not bunched up.

9. Lower the wiper arm down against the windshield.

CONTINUED

Tires

To safely operate your vehicle, your tires must be the proper type and size, in good condition with adequate tread, and correctly inflated.

The following pages give more detailed information on how to take care of your tires and what to do when they need to be replaced.

⚠ WARNING

Using tires that are excessively worn or improperly inflated can cause a crash in which you can be seriously hurt or killed.

Follow all instructions in this owner's manual regarding tire inflation and maintenance.

Inflation Guidelines

Keeping the tires properly inflated provides the best combination of handling, tread life, and riding comfort.

- Underinflated tires wear unevenly, adversely affect handling and fuel economy, and are more likely to fail from being overheated.
- Overinflated tires can make your vehicle ride more harshly, are more prone to damage from road hazards, and wear unevenly.

On U.S. models

The tire pressure monitoring system (TPMS) warns you when a tire pressure is low. See page 291 for more information.

On all Canadian models

We recommend that you visually check your tires every day. If you think a tire might be low, check it immediately with a tire gauge.

On U.S. models

Even though your vehicle is equipped with TPMS, we recommend that you visually check your tires every day. If you think a tire might be low, check it immediately with a tire gauge.

Use a gauge to measure the air pressure in each tire at least once a month. Even tires that are in good condition may lose 1 to 2 psi (10 to 20 kPa, 0.1 to 0.2 kgf/cm^2) per month. Remember to check the spare tire at the same time.

Check the air pressures when the tires are cold. This means the vehicle has been parked for at least 3 hours, or driven less than 1 mile (1.6 km). Add or release air, if needed, to match the recommended cold tire pressures.

If you check air pressures when the tires are hot (driven for several miles/kilometers), you will see readings 4 to 6 psi (30 to 40 kPa, 0.3 to 0.4 kgf/cm²) higher than the cold readings. This is normal. Do not let air out to match the recommended cold air pressure. The tire will be underinflated.

You should get your own tire pressure gauge and use it whenever you check your tire pressures. This will make it easier for you to tell if a pressure loss is due to a tire problem and not due to a variation between gauges.

While tubeless tires have some ability to self-seal if they are punctured, you should look closely for punctures if a tire starts losing pressure.

Recommended Tire Pressures
The following chart shows the recommended cold tire pressures for most normal driving conditions.

Tire Size	Cold Tire Pressure
P185/60R15 84T	Front/Rear: 33 psi (230 kPa , 2.3 kgf/cm²)

The compact spare tire pressure is:
60 psi (420 kPa , 4.2 kgf/cm²)

For convenience, the recommended tire sizes and cold tire pressures are on a label on the driver's doorjamb.

For additional information about your tires, see page 384 .

Tire Inspection
Every time you check inflation, you should also examine the tires for damage, foreign objects, and wear.

You should look for:

- Bumps or bulges in the tread or side of the tire. Replace the tire if you find either of these conditions.
- Cuts, splits, or cracks in the side of the tire. Replace the tire if you can see fabric or cord.
- Excessive tread wear.

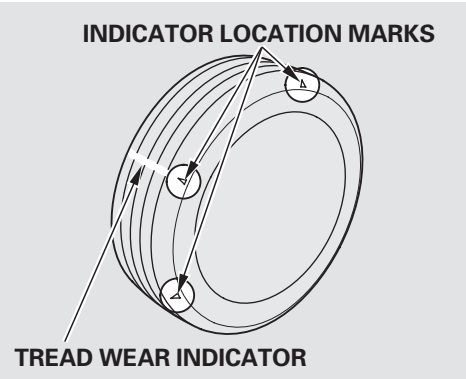

Your tires have wear indicators molded into the tread. When the tread wears down, you will see a 1/2 inch (12.7 mm) wide band across the tread. This shows there is less than 1/16 inch (1.6 mm) of tread left on the tire.

A tire this worn gives very little traction on wet roads. You should replace the tire if you can see three or more tread wear indicators.

Tire Service Life

The service life of your tires is dependent on many factors, including, but not limited to, driving habits, road conditions, vehicle loading, inflation pressure, maintenance history, speed, and environmental conditions (even when the tires are not in use).

In addition to your regular inspections and inflation pressure maintenance, it is recommended that you have annual inspections performed once the tires reach five years old. It is also recommended that all tires, including the spare, be removed from service after 10 years from the date of manufacture, regardless of their condition or state of wear.
The last four digits of the TIN (tire identification number) are found on the sidewall of the tire and indicate the date of manufacture (See **Tire Labeling** on page 385).

Tire Maintenance

In addition to proper inflation, correct wheel alignment helps to decrease tire wear. If you find a tire is worn unevenly, have your dealer check the wheel alignment.

Have your dealer check the tires if you feel a consistent vibration while driving. A tire should always be rebalanced if it is removed from the wheel. When you have new tires installed, make sure they are balanced. This increases riding comfort and tire life. For best results, have the installer perform a dynamic balance.

NOTICE

Improper wheel weights can damage your vehicle's aluminum wheels. Use only Honda wheel weights for balancing.

Tire Rotation

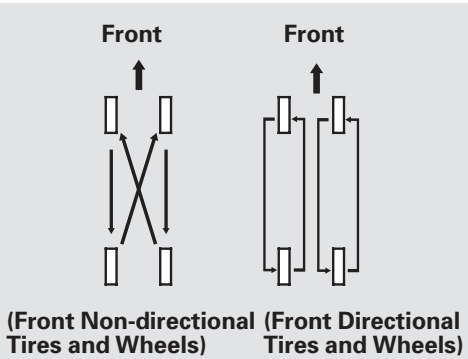

To help increase tire life and distribute wear more evenly, rotate the tires according to the maintenance messages displayed on the multi-information display. Move the tires to the positions shown in the illustration each time they are rotated. If you purchase directional tires, rotate only front-to-back.

Replacing Tires and Wheels

Replace your tires with radial tires of the same size, load range, speed rating, and maximum cold tire pressure rating (as shown on the tire's sidewall).

Mixing radial and bias-ply tires on your vehicle can reduce braking ability, traction, and steering accuracy. Using tires of a different size or construction can cause the ABS and vehicle stability assist system (VSA) to work inconsistently.

The ABS and VSA system work by comparing the speed of each wheel. When replacing tires, use the same size originally supplied with the vehicle. Tire size and construction can affect wheel speed and may cause the system to activate.

It is best to replace all four tires at the same time. If that is not possible or necessary, replace the two front tires or two rear tires as a pair. Replacing just one tire can seriously affect your vehicle's handling.

If you ever replace a wheel, make sure that the wheel's specifications match those of the original wheels.

On U.S. models
Also be sure you use only TPMS specific wheels. If you do not, the tire pressure monitoring system will not work.

Replacement wheels are available at your dealer.

CONTINUED

⚠ WARNING

Installing improper tires on your vehicle can affect handling and stability. This can cause a crash in which you can be seriously hurt or killed.

Always use the size and type of tires recommended in this owner's manual.

Wheel and Tire Specifications

Wheels:
15 x 6J

Tires:
P185/60R15 84T

See page 384 for DOT tire quality grading information, and page 384 for tire size information.

Winter Driving

Tires marked "M + S" or "All Season" on the sidewall have an all-weather tread design suitable for most winter driving conditions.

For the best performance in snowy or icy conditions, you should install snow tires or tire chains. They may be required by local laws under certain conditions.

Snow Tires

If you mount snow tires on your vehicle, make sure they are radial tires of the same size and load range as original tires. Mount snow tires on all four wheels. The traction provided by snow tires on dry roads may be lower than your original tires. Check with the tire dealer for maximum speed recommendations.

Tire Chains

Mount tire chains on your tires when required by driving conditions or local laws. Install them only on the front tires.

Because your vehicle has limited tire clearance, Honda strongly recommends using the chains listed below, made by Security Chain Company (SCC).

Cable-type: SCC RADIAL CHAIN SC1026

When installing cables, follow the manufacturer's instructions, and mount them as tight as you can. Make sure they are not contacting the brake lines or suspension. Drive slowly with them installed. If you hear them coming into contact with the body or chassis, stop and investigate. Remove them as soon as you begin driving on cleared roads.

NOTICE

Traction devices that are the wrong size or improperly installed can damage your vehicle's brake lines, suspension, body, and wheels. Stop driving if they are hitting any part of the vehicle.

⚠ WARNING

Using the wrong chains, or not properly installing chains, can damage the brake lines and cause a crash in which you can be seriously injured or killed.

Follow all instructions in this owner's manual regarding the selection and use of tire chains.

Wheels

Clean the wheels as you would the rest of the exterior. Wash them with the same solution, and rinse them thoroughly.

If equipped

Aluminum alloy wheels have a protective clear-coat that keeps the aluminum from corroding and tarnishing. Cleaning the wheels with harsh chemicals (including some commercial wheel cleaners) or a stiff brush can damage the clear-coat. To clean the wheels, use a mild detergent and a soft brush or sponge.

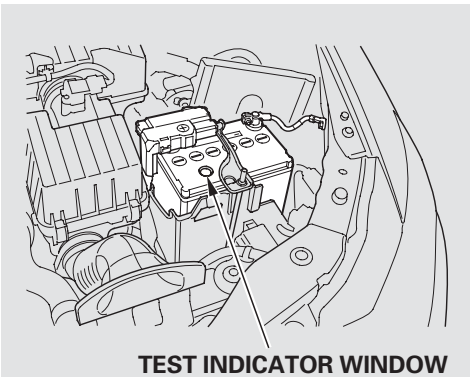

Check the condition of the 12 volt battery monthly by looking at the test indicator window. The label on the battery explains the test indicator's colors.

Check the terminals for corrosion (a white or yellowish powder). To remove it, cover the terminals with a solution of baking soda and water. It will bubble up and turn brown. When this stops, wash it off with plain water. Dry off the battery with a cloth or paper towel. Coat the terminals with grease to help prevent further corrosion.

If additional 12 volt battery maintenance is needed, see your dealer or a qualified technician.

WARNING: Battery posts, terminals, and related accessories contain lead and lead compounds. **Wash your hands after handling.**

If you need to connect the battery to a charger, disconnect both cables to prevent damaging your vehicle's electrical system. Always disconnect the negative (−) cable first, and reconnect it last.

⚠ WARNING

The battery gives off explosive hydrogen gas during normal operation.

A spark or flame can cause the battery to explode with enough force to kill or seriously hurt you.

Wear protective clothing and a face shield, or have a skilled technician do the battery maintenance.

If your vehicle's 12 volt battery is disconnected or goes dead, the IMA battery level gauge reading will not be correct the next time you turn the ignition switch to the ON (II) position. It will show less than the actual level temporarily. It will show the correct level after you drive for at least 30 minutes.

If your vehicle's battery is disconnected, or goes dead, the time setting may be lost. To reset the time, see page 222 .

If your vehicle's battery is disconnected or goes dead, the audio system may disable itself. The next time you turn on the radio, you will see "ENTER CODE" in the frequency display. Use the preset buttons to enter the code (see page 221).

On vehicles with navigation system
The navigation system will also disable itself. The next time you turn on the ignition switch, the system will require you to enter a PIN before it can be used. Refer to the navigation system manual.

If you need to park your vehicle for an extended period (more than 1 month), there are several things you should do to prepare it for storage. Proper preparation helps prevent deterioration and makes it easier to get your vehicle back on the road. If possible, store your vehicle indoors.

- Fill the fuel tank.
- Wash and dry the exterior completely.
- Clean the interior. Make sure the carpeting, floor mats, etc., are completely dry.
- Leave the parking brake off. Put the transmission in Park.
- Block the rear wheels.
- If the vehicle is to be stored for a longer period, it should be supported on jackstands so the tires are off the ground.
- Leave one window open slightly (if the vehicle is being stored indoors).
- Disconnect the 12 volt battery.
- Support the front and rear wiper blade arms with a folded towel or rag so they do not touch the windshield.
- To minimize sticking, apply a silicone spray lubricant to all door and hatch seals. Also, apply a vehicle body wax to the painted surfaces that mate with the door and hatch seals.
- Cover the vehicle with a “breathable” cover, one made from a porous material such as cotton. Non-porous materials, such as plastic sheeting, trap moisture, which can damage the paint.
- Reconnect the 12 volt battery and drive your vehicle every month for about 30 minutes. This will keep the IMA battery charged and in good condition.
- If possible, periodically run the engine until it reaches full operating temperature (the cooling fans cycle on and off twice). Preferably, do this once a month.

NOTICE

If this vehicle is unused for over one month, the service life of the 100V Nickel-Metal Hydride battery will be reduced and the battery may be permanently damaged.

This section covers the more common problems that motorists experience with their vehicles. It gives you information about how to safely evaluate the problem and what to do to correct it. If the problem has stranded you on the side of the road, you may be able to get going again. If not, you will also find instructions on getting your vehicle towed.

Compact Spare Tire..... 350
Changing a Flat Tire 351
If the Engine Won't Start..... 358
Jump Starting 360
If the Engine Overheats 362
Low Oil Pressure Indicator 365
12 Volt Battery Charging System Indicator..... 366
Malfunction Indicator Lamp 367
Brake System Indicator 368
Fuses 369
Fuse Locations..... 374
Emergency Towing 376
If Your Vehicle Gets Stuck..... 377

Use the compact spare tire as a temporary replacement only. Get your regular tire repaired or replaced, and put it back on your vehicle as soon as you can.

Check the air pressure of the compact spare tire every time you check the other tires. It should be inflated to:
60 psi (420 kPa , 4.2 kgf/cm²)

Follow these precautions:

- Never exceed 50 mph (80 km/h).
- This tire gives a harsher ride and less traction on some road surfaces. Use greater caution while driving.
- Do not mount snow chains on the compact spare tire.
- Do not use your compact spare tire on another vehicle unless it is the same make and model.

On U.S. models

- After the flat tire is replaced with the spare tire, the low tire pressure/TPMS indicator stays on while driving. After several miles (kilometers) driving, this indicator begins to flash, then stays on again. You will also see a “CHECK TPMS SYSTEM” message on the multi-information display. This is normal; the system cannot monitor the spare tire pressure. Manually check the spare tire pressure to be sure it is correct.

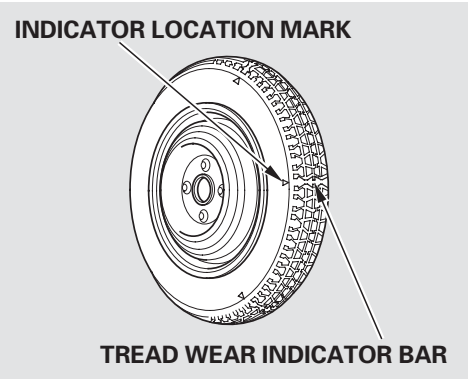

Replace the tire when you can see the tread wear indicator bars. The replacement tire should be the same size and design, mounted on the same wheel. The spare tire is not designed to be mounted on a regular wheel, and the spare wheel is not designed for mounting a regular tire.

If you have a flat tire while driving, stop in a safe place to change it. Drive slowly along the shoulder until you get to an exit or an area to stop that is far away from the traffic lanes.

⚠ WARNING

The vehicle can easily roll off the jack, seriously injuring anyone underneath.

Follow the directions for changing a tire exactly, and never get under the vehicle when it is supported only by the jack.

1. Park the vehicle on firm, level, and non-slippery ground. Put the transmission in Park. Apply the parking brake.

2. Turn on the hazard warning lights, and turn the ignition switch to the LOCK (0) position. Have all passengers get out of the vehicle while you change the tire.

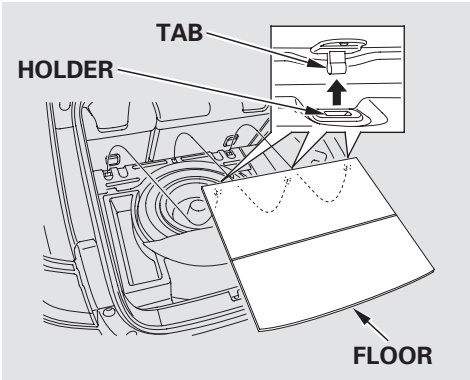

3. Open the hatch.

4. Remove the cargo area floor by carefully pulling the front edge of the floor straight up.

CONTINUED

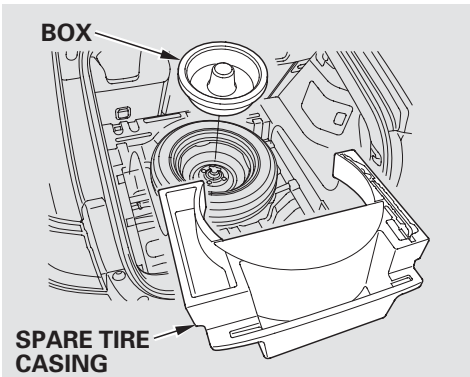

5. Take the box out of the spare tire.

6. Take the spare tire casing out of the cargo area.

7. Unscrew the wing bolt and take the spare tire out of its well.

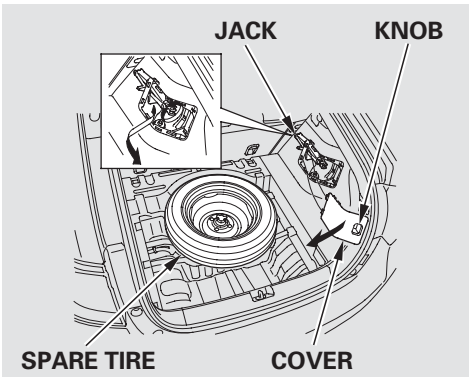

8. Remove the jack compartment cover by pulling the knob.

9. Turn the jack's end bracket counterclockwise to loosen it, then remove the jack.

10. Loosen each wheel nut 1/2 turn with the wheel nut wrench.

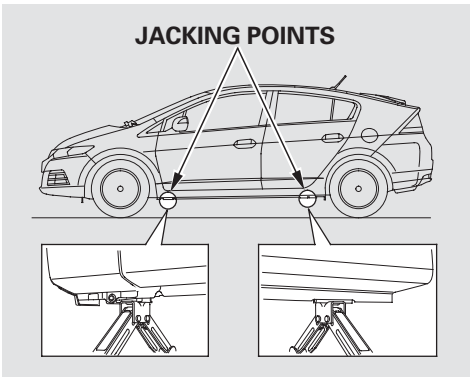

11. Place the jack under the jacking point nearest the tire you need to change. Turn the end bracket clockwise until the top of the jack contacts the jacking point. Make sure the jacking point tab is resting in the jack notch.

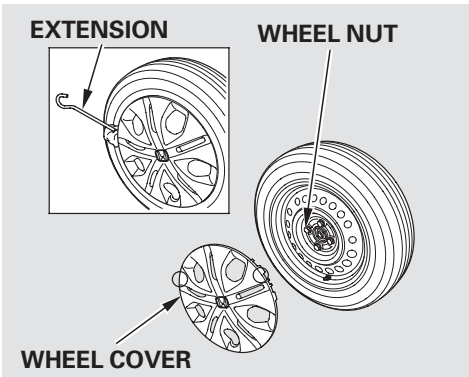

Insight and LX models

12. Remove the wheel cover by carefully prying under its edge with the flat tip of the extension.

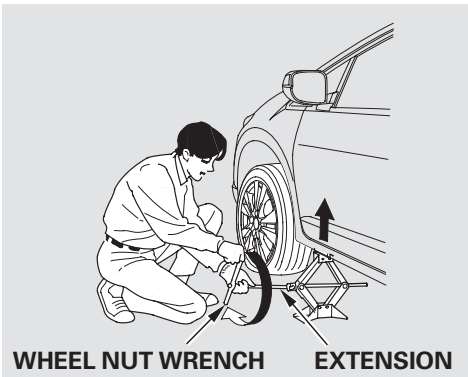

13. Use the extension and the wheel nut wrench as shown to raise the vehicle until the flat tire is off the ground.

14. Remove the wheel nuts, then remove the flat tire. Handle the wheel nuts carefully; they may be hot from driving. Place the flat tire on the ground with the outside surface facing up.

CONTINUED

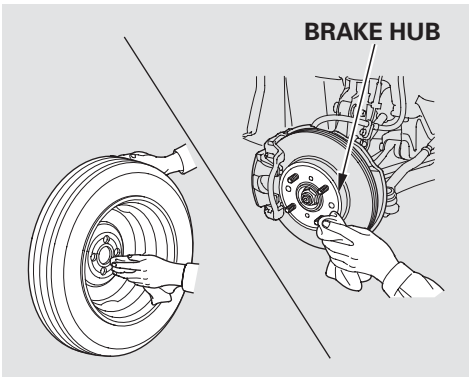

15. Before mounting the spare tire, wipe any dirt off the mounting surface of the wheel and hub with a clean cloth. Wipe the hub carefully; it may be hot from driving.

16. Put on the spare tire. Put the wheel nuts back on finger-tight, then tighten them in a crisscross pattern with the wheel nut wrench until the wheel is firmly against the hub. Do not try to tighten the wheel nuts fully.

17. Lower the vehicle to the ground, and remove the jack.

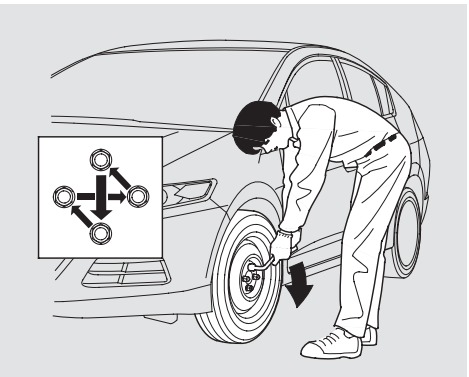

18. Tighten the wheel nuts securely in the same crisscross pattern. Have the wheel nut torque checked at the nearest automotive service facility.
    Tighten the wheel nuts to:
    80 lbf·ft (108 N·m , 11 kgf·m)

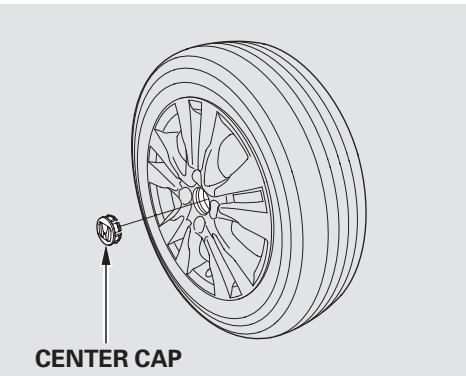

EX models

19. Remove the center cap (if equipped) before storing the flat tire in the cargo area well.

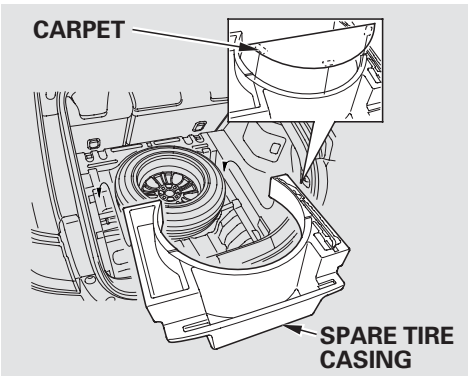

20. Place the flat tire face down in the spare tire well.

21. Remove the carpet from the spare tire casing and store it in the casing.

22. Install the spare tire casing in the original position in the spare tire well.

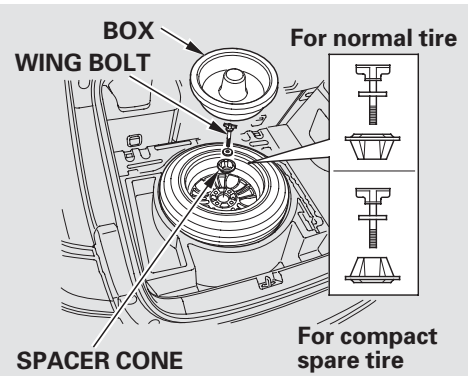

23. Remove the spacer cone from the wing bolt, turn it over, and put it back on the bolt.

24. Secure the flat tire by screwing the wing bolt back into its hole. Store the box in the wheel of the flat tire.

CONTINUED

25. Store the tools in the spare tire casing and the jack in its holder. Turn the jack's end bracket clockwise to lock it in place, and reinstall the cover.

⚠ WARNING

Loose items can fly around the interior in a crash and could seriously injure the occupants.

Store the wheel, jack, and tools securely before driving.

26. Store the center cap in the cargo area. Make sure it does not get scratched or damaged.

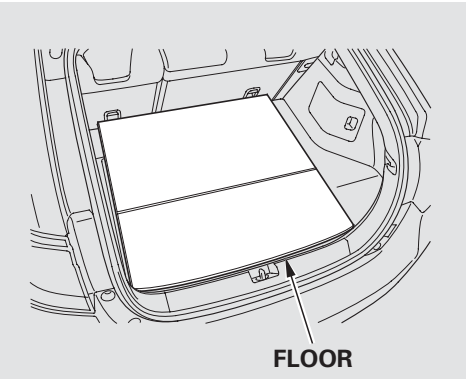

27. Place the cargo area floor in its original position. Close the hatch.

U.S. models only

28. Your vehicle's original tire has a tire pressure monitoring system sensor. To replace a tire, refer to **Changing a Tire with TPMS** (see page 293).

Installing a wheel cover

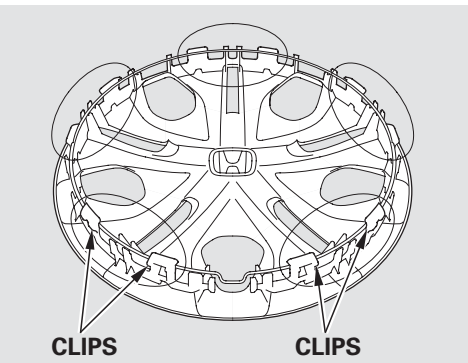

Insight and LX models

1. Make sure the wire support ring is hooked into the clips around the edge of the wheel cover.

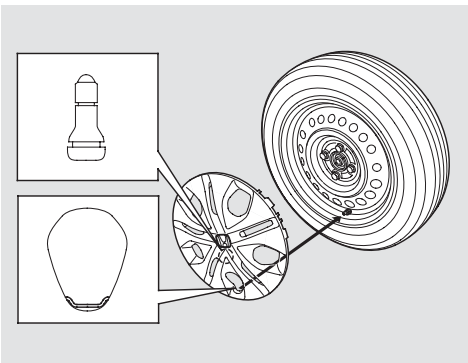

2. Align the valve mark on the wheel cover to the tire valve on the wheel, then install the wheel cover.

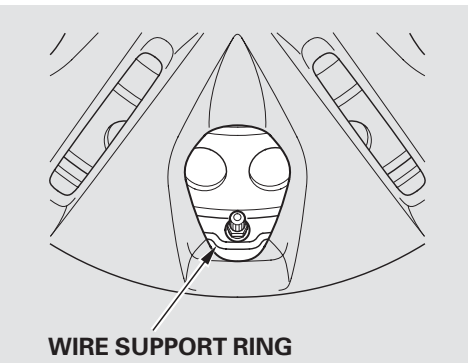

3. Make sure the wire support ring is on the outer side of the tire valve as shown.

The engine normally starts with the IMA motor. If the engine does not start while the IMA battery charge is normally sufficient, check the following:

- Check the transmission interlock. The transmission must be in Park or neutral or the starter will not operate.
- Are you using a properly coded key? An improperly coded key will cause the immobilizer system indicator in the instrument panel to blink rapidly (see page 130).
- Are you using the proper starting procedure? Refer to **Starting the Engine** on page 265 .
- Do you have fuel? Check the fuel gauge; the low fuel indicator may not be working.
- There may be an electrical problem, such as no power to the fuel pump. Check all the fuses (see page 369).

When the IMA battery charge is low, the starter motor is used to start the engine. If the engine does not start, check the following:

- Turn the ignition switch to the ON (II) position. Turn on the headlights, and check their brightness. If the headlights are very dim or do not come on at all, the battery is discharged. See **Jump Starting** on page 360 .

- Turn the ignition switch to the START (III) position. If the headlights do not dim, check the condition of the fuses. If the fuses are OK, there is probably something wrong with the electrical circuit for the ignition switch or starter motor. You will need a qualified technician to determine the problem. See **Emergency Towing** on page 376 .

If the headlights dim noticeably or go out when you try to start the engine, either the 12 volt battery is discharged or the connections are corroded. Check the condition of the 12 volt battery and terminal connections (see page 346). You can then try jump starting the vehicle from a booster 12 volt battery (see page 360).

If you find nothing wrong, you will need a qualified technician to find the problem. See **Emergency Towing** on page 376 .

Although this seems like a simple procedure, you should take several precautions.

⚠ WARNING

A battery can explode if you do not follow the correct procedure, seriously injuring anyone nearby.

Keep all sparks, open flames, and smoking materials away from the battery.

You cannot start your vehicle by pushing or pulling it.

To jump start your vehicle:

1. Open the hood, and check the physical condition of the 12 volt battery.

NOTICE

If a battery sits in extreme cold, the electrolyte inside can freeze. Attempting to jump start with a frozen battery can cause it to rupture.

2. Turn off all the electrical accessories: climate control, audio system, lights, etc. Put the transmission in Park, and set the parking brake.

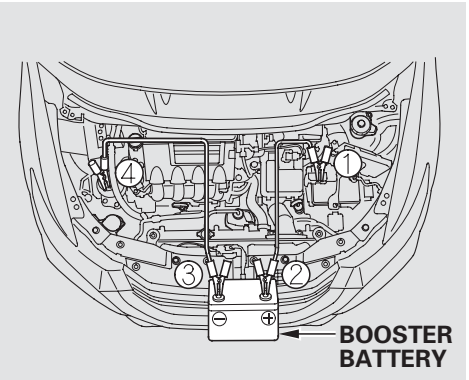

The numbers in the illustration show you the order to connect the jumper cables.

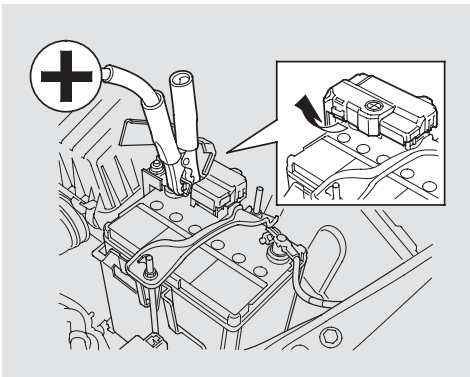

3. Connect one jumper cable to the positive (+) terminal on your battery. Connect the other end to the positive (+) terminal on the booster battery.

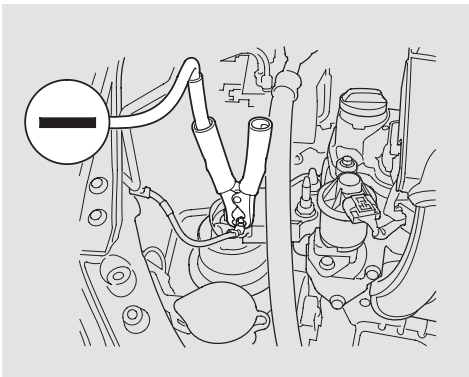

4. Connect the second jumper cable to the negative (−) terminal on the booster battery. Connect the other end to the grounding strap as shown. Do not connect this jumper cable to any other part of the engine.

5. If the booster battery is in another vehicle, have an assistant start that vehicle and run it at a fast idle.

6. Start the vehicle. If the starter motor still operates slowly, check that the jumper cables have good metal-to-metal contact.

7. Once your vehicle is running, disconnect the negative cable from your vehicle, then from the booster battery. Disconnect the positive cable from your vehicle, then from the booster battery.

Keep the ends of the jumper cables away from each other and any metal on the vehicle until everything is disconnected. Otherwise, you may cause an electrical short.

CONTINUED

If your vehicle's 12 volt battery is disconnected or goes dead, the IMA battery level gauge reading will not be correct the next time you turn the ignition switch to the ON (II) position. It will show less than the actual level temporarily. It will show the correct level after you drive for at least 30 minutes.

If the Engine Overheats

The high temperature indicator should be off under most conditions. If the engine coolant temperature gets higher than normal, the indicator will blink. If it stays on, you should determine the reason (hot day, driving up a steep hill, etc.).

You will also see a "WATER TEMP HOT" message on the multi-information display (see page 67).

If the vehicle overheats, you should take immediate action. The only indication may be the high temperature indicator blinking or remaining on. Or you may see steam or spray coming from under the hood.

NOTICE

Driving with the high temperature indicator on can cause serious damage to your engine.

⚠ WARNING

Steam and spray from an overheated engine can seriously scald you.

Do not open the hood if steam is coming out.

1. Safely pull to the side of the road. Put the transmission in Park, and set the parking brake. Turn off all the accessories, and turn on the hazard warning lights.

2. If you see steam and/or spray coming from under the hood, turn off the engine. Wait until you see no more signs of steam or spray, then open the hood.

3. If you do not see steam or spray, leave the engine running, and check the high temperature indicator. If the high heat is due to overloading, the engine should start to cool down almost immediately. If it does, wait until the high temperature indicator goes off, then continue driving.

4. If the high temperature indicator stays on, turn off the engine.

5. Look for any obvious coolant leaks, such as a split radiator hose. Everything is still extremely hot, so use caution. If you find a leak, it must be repaired before you continue driving (see **Emergency Towing** on page 376).

6. If you don't find an obvious leak, check the coolant level in the radiator reserve tank (see page 252). Add coolant if the level is below the MIN mark.

7. If there was no coolant in the reserve tank, you may need to add coolant to the radiator. Let the engine cool down until the high temperature indicator goes off before checking the radiator.

CONTINUED

⚠ WARNING

Removing the radiator cap while the engine is hot can cause the coolant to spray out, seriously scalding you.

Always let the engine and radiator cool down before removing the radiator cap.

8. Using gloves or a large heavy cloth, turn the radiator cap counterclockwise, without pushing down, to the first stop. After the pressure releases, push down on the cap, and turn it until it comes off.

9. Start the engine, and set the temperature to maximum heat (climate control to AUTO at " Hi "). Add coolant to the radiator up to the base of the filler neck. If you do not have the proper coolant mixture available, you can add plain water. Remember to have the cooling system drained and refilled with the proper mixture as soon as you can.

10. Put the radiator cap back on tightly. Run the engine, and check the high temperature indicator. If it begins to blink or comes on again, the engine needs repair (see **Emergency Towing** on page 376).

11. If the temperature stays normal, check the coolant level in the radiator reserve tank. If it has gone down, add coolant to the MAX mark. Put the cap back on tightly.

This indicator should never come on when the engine is running. If it starts flashing or stays on, the oil pressure has dropped very low or lost pressure. Serious engine damage is possible, and you should take immediate action.

You will also see a “CHECK ENGINE OIL LEVEL” message on the multi-information display when this indicator comes on.

The indicator notifies you of low oil pressure and does not measure the oil level. Check your vehicle’s oil level at each refueling.

NOTICE

Running the engine with low oil pressure can cause serious mechanical damage almost immediately. Turn off the engine as soon as you can safely get the vehicle stopped.

1. Safely pull off the road, and shut off the engine. Turn on the hazard warning lights.

2. Let the vehicle sit for a minute. Open the hood, and check the oil level (see page 251). An engine very low on oil can lose pressure during cornering and other driving maneuvers.

3. If necessary, add oil to bring the level back to the full mark on the dipstick (see page 312).

4. Start the engine and watch the oil pressure indicator. If it does not go out within 10 seconds, turn off the engine. There is a mechanical problem that needs to be repaired before you can continue driving (see **Emergency Towing** on page 376).

The engine running generates the oil pressure. When the Auto Idle Stop is activated, the engine is stopped, the oil pressure is dropped, and the low oil pressure indicator does not come on.

12 Volt Battery Charging System Indicator

If the charging system indicator comes on brightly when the engine is running, the 12 volt battery is not being charged.

You will also see a “CHECK CHARGING SYSTEM” message on the multi-information display (see page 89).

Immediately turn off all electrical accessories. Try not to use other electrically operated controls such as the power windows. Keep the engine running; starting the engine will discharge the battery rapidly.

Go to a service station or garage where you can get technical assistance.

This indicator may blink after you start the vehicle in the morning when the temperature is below −20°F (−30°C). It will stop blinking when the IMA battery warms up.

If the indicator comes on while driving, it means one of the engine's emissions control systems may have a problem. Even though you may feel no difference in your vehicle's performance, it can reduce your fuel economy and cause increased emissions. Continued operation may cause serious damage.

If you have recently refueled your vehicle, the indicator coming on could be due to a loose or missing fuel fill cap. You will also see a "TIGHTEN FUEL CAP" message on the multi-information display. Tighten the cap until it clicks at least once (see page 249). Tightening the cap will not turn the indicator off immediately; it can take several days of normal driving.

If the indicator comes on repeatedly, even though it may turn off as you continue driving, have your vehicle checked by your dealer as soon as possible.

NOTICE

If you keep driving with the Malfunction Indicator Lamp on, you can damage your vehicle's emissions controls and engine. Those repairs may not be covered by your vehicle's warranties. This indicator may also come on with the ''D'' indicator.

Readiness Code

Your vehicle has certain "readiness codes" that are part of the on-board diagnostics for the emissions systems. In some states, part of the emissions testing is to make sure these codes are set. If they are not set, the test cannot be completed.

If your vehicle's battery has been disconnected or gone dead, these codes are erased. It can take several days of driving under various conditions to set the codes again.

To check if they are set, turn the ignition switch to the ON (II) position, without starting the engine. The malfunction indicator lamp will come on for 20 seconds. If it then goes off, the readiness codes are set. If it blinks five times, the readiness codes are not set. If possible, do not take your vehicle for an emissions test until the readiness codes are set. Refer to **Emissions Testing** for more information (see page 392).

You will also see a "CHECK EMISSION SYSTEM" message on the multi-information display. For more information, see page 89 .

Brake System Indicator

U.S. Canada

BRAKE (!) **(Red)**

The brake system indicator normally comes on when you turn the ignition switch to the ON (II) position and as a reminder to check the parking brake. If you do not release the parking brake, the indicator will stay on, and you will see a "RELEASE PARKING BRAKE" message on the multi-information display.

If the brake system indicator comes on while driving, the brake fluid level is probably low. Press lightly on the brake pedal to see if it feels normal. If it does, check the brake fluid level the next time you stop at a service station (see page 321).

If the fluid level is low, take your vehicle to a dealer, and have the brake system inspected for leaks or worn brake pads.

However, if the brake pedal does not feel normal, you should take immediate action. A problem in one part of the system's dual circuit design will still give you braking at two wheels. You will feel the brake pedal go down much farther before the vehicle begins to slow down, and you will have to press harder on the pedal.

Slow down and pull to the side of the road when it is safe. Because of the long distance needed to stop, it is hazardous to drive the vehicle. You should have it towed and repaired as soon as possible (see **Emergency Towing** on page 376).

If this indicator comes on for any other reason, have your vehicle inspected by your dealer. There may be a malfunction with the electric brake distribution (EBD) system. Avoid hard braking and high speed driving.

You will also see a "BRAKE FLUID LOW" or "CHECK BRAKE SYSTEM" message on the multi-information display (see page 89).

If you must drive the vehicle a short distance in this condition, drive slowly and carefully.

If the ABS indicator comes on with the brake system indicator, have your vehicle inspected by your dealer immediately.

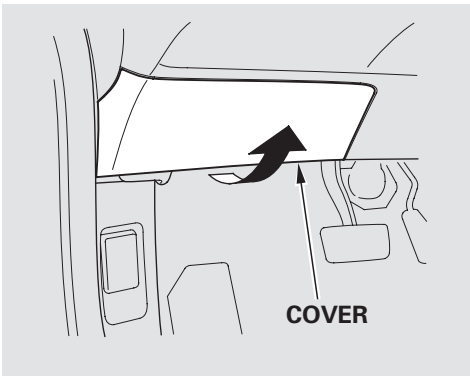

The vehicle's fuses are contained in three fuse boxes.

The interior fuse box is behind the dashboard on the driver's side.

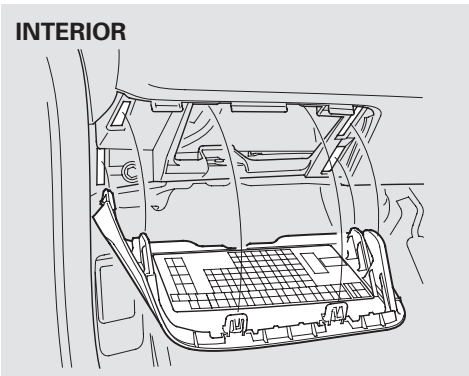

The interior fuse box label is attached on the back side of the cover. To see the interior fuse box label, remove the cover by pulling it toward you while holding the bottom center part of cover.

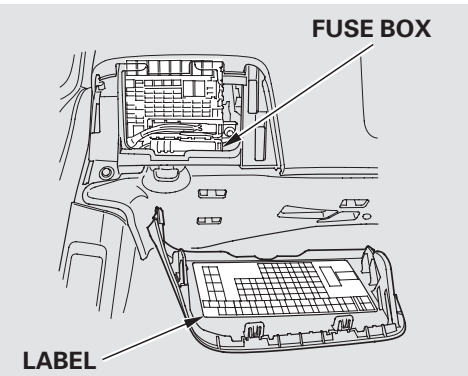

CONTINUED

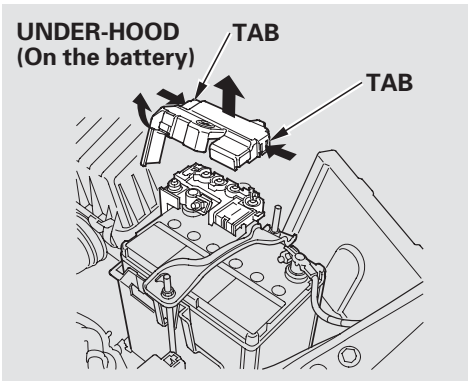

The under-hood fuse is on the positive terminal of the battery. To open it, push the tabs as shown.

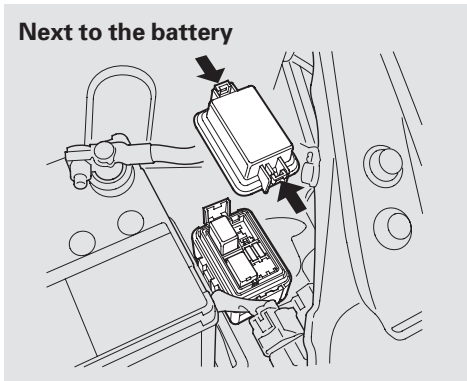

The under-hood fuse box is located next to the battery. To open it, push the tab as shown.

Checking and Replacing Fuses
If something electrical in your vehicle stops working, the first thing you should check for is a blown fuse. Determine from the chart on pages 374 and 375 , or the diagram on the fuse box lid, which fuse or fuses control that device. Check those fuses first, but check all the fuses before deciding that a blown fuse is the cause. Replace any blown fuses, and check if the device works.

1. Turn the ignition switch to the LOCK (0) position. Make sure the headlights and all other accessories are off.

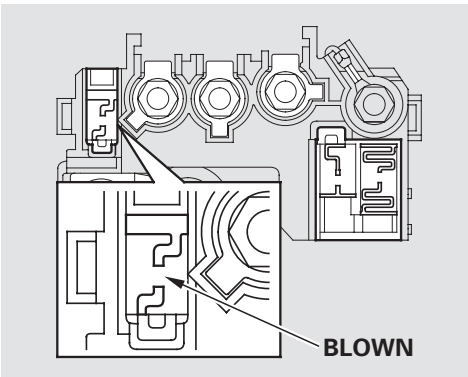

2. Remove the cover from the under-hood fuse box located on the battery (see page 370).

3. Check each of the large fuses in the under-hood fuse box on the 12 volt battery by looking through the top at the wire inside. Replacement of these fuses should be done by your dealer.

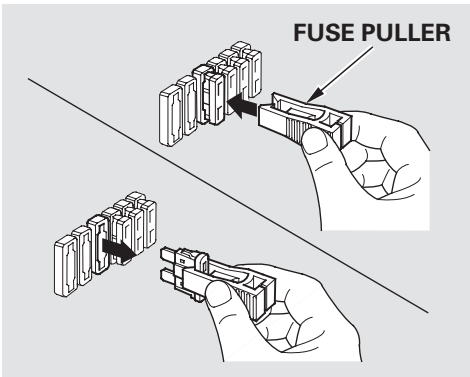

4. Check the smaller fuses in the under-hood fuse boxes and all the fuses in the interior fuse box by pulling out each one with the fuse puller provided in the interior fuse box.

CONTINUED

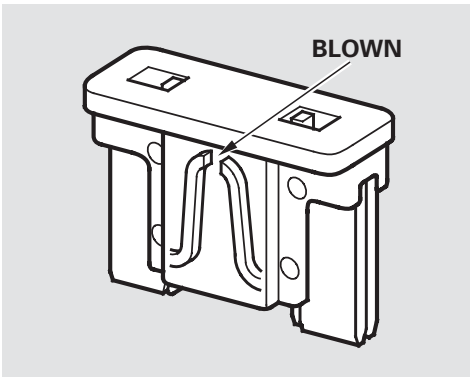

5. Look for a blown wire inside the fuse. If it is blown, replace the fuse with one of the spare fuses of the same rating or lower.

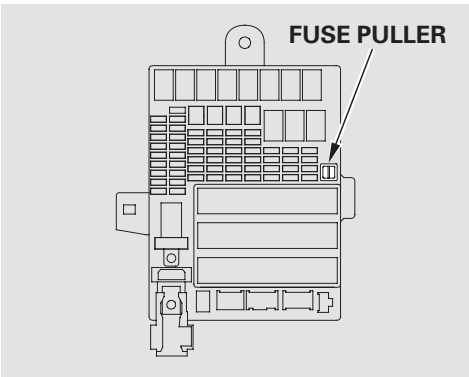

The fuse puller is in the interior fuse box.

If you cannot drive the vehicle without fixing the problem, and you do not have a spare fuse, take a fuse of the same rating or a lower rating from one of the other circuits. Make sure you can do without that circuit temporarily (such as the accessory power socket or radio).

If you replace the blown fuse with a spare fuse that has a lower rating, it might blow out again. This does not indicate that anything is wrong. Replace the fuse with one of the correct rating as soon as you can.

NOTICE

Replacing a fuse with one that has a higher rating greatly increases the chances of damaging the electrical system. If you do not have a replacement fuse with the proper rating for the circuit, install one with a lower rating.

6. If the replacement fuse of the same rating blows in a short time, there is probably a serious electrical problem with your vehicle. Leave the blown fuse in that circuit, and have your vehicle checked by a qualified technician.

When the audio system is disabled, the clock setting in the audio system is canceled. You need to reset the clock according to the instructions in the audio system section in this owner's manual.

INTERIOR FUSE BOX

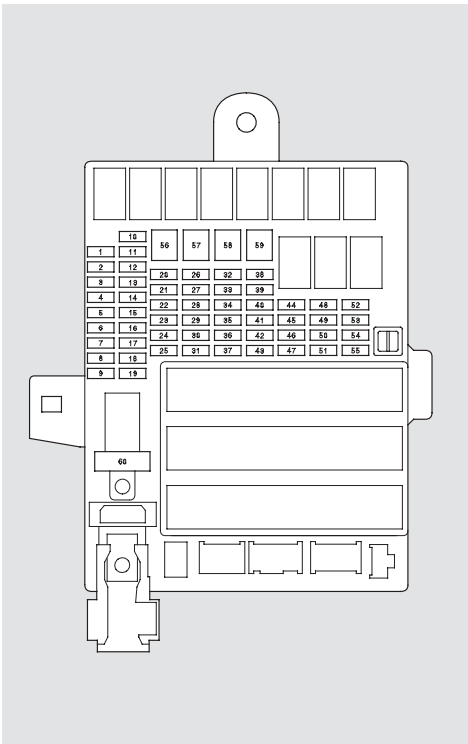

No.	Amps.	Circuits Protected
1	15 A	Back Up
2	(7.5 A)	TPMS*
3	20 A	Driver's Power Window
4	—	Not Used
5	10 A	Back Up Light
6	10 A	SRS
7	10 A	Transmission SOL
8	7.5 A	OPDS
9	—	Not Used
10	7.5 A	A/C
11	7.5 A	ABS/VSA
12	10 A	IMA
13	20 A	ACC Socket
14	7.5 A	Accessory
15	7.5 A	Daytime Running Light
16	10 A	Rear Wiper
17	20 A	Front Passenger's Power Window
18	20 A	Rear Passenger's Side Power Window
19	20 A	Rear Driver's Side Power Window
20	15 A	Fuel Pump
21	15 A	Washer
22	7.5 A	Meter

No.	Amps.	Circuits Protected
23	10 A	Hazard
24	10 A	Stop/Horn
25	—	Not Used
26	10 A	LAF
27	30 A	Door Lock Main
28	20 A	Headlight Main
29	10 A	Small Light
30	30 A	Radiator Fan Motor
31	7.5 A	IGPS
32	10 A	Right Headlight Low Beam
33	20 A	IG Coil
34	10 A	Left Headlight Low Beam
35	15 A	Door Lock Motor 2 (Lock)
36	15 A	Door Lock Motor 1 (Lock)
37	30 A	ABS/VSA FSR
38	15 A	Selectable Door Lock
39	15 A	IGP
40	—	Not Used
41	—	Not Used
42	10 A	IMA 1
43	7.5 A	MG Clutch
44	7.5 A	STS

* : U.S. models

No.	Amps.	Circuits Protected
45	7.5 A	Hatch Lock
46	—	Not Used
47	30 A	Condenser Fan Motor
48	10 A	Left Headlight High Beam
49	15 A	Door Lock Motor 2 (Unlock)
50	15 A	Door Lock Motor 1 (Unlock)
51	10 A	Right Headlight High Beam
52	15 A	DBW
53	10 A	IMA 2
54	—	Not Used
55	10 A	Heated Mirror*2, *3
56	30 A	Front Wiper
57	30 A	Blower Motor
58	30 A	ABS/VSA Motor
59	30 A	Rear Defogger*1
	40 A	Rear Defogger*2, *3
60	—	Not Used
	50 A	IG Main

*1 : Insight model and U.S. LX model
*2 : Canadian models
*3 : EX models

UNDER-HOOD FUSE BOXES

On the battery

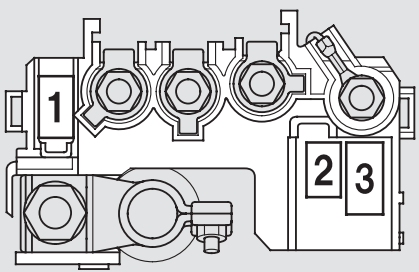

No.	Amps.	Circuits Protected
1	100 A	Battery, Main, ACG
2	60 A	EPS
3	20 A	Horn, Stop, Hazard

Next to the battery

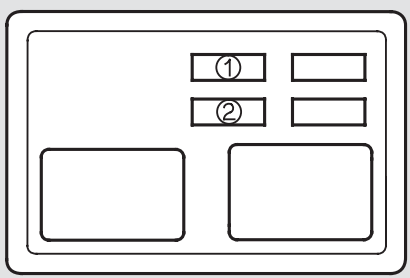

No.	Amps.	Circuits Protected
1	15 A	Ignition Coil (EX)
2	15 A	Ignition Coil (IN)

If your vehicle needs to be towed, call a professional towing service or organization. Never tow your vehicle with just a rope or chain. It is very dangerous.

There are two ways to tow your vehicle:

Flat-bed Equipment — The operator loads your vehicle on the back of a truck. **This is the best way to transport your vehicle.**

Wheel-lift Equipment — The tow truck uses two pivoting arms that go under the tires (front) and lift them off the ground. The other two tires remain on the ground. **This is an acceptable way to tow your vehicle.**

If, due to damage, your vehicle must be towed with the front wheels on the ground, do this:

- Start the engine.
- Shift to the D position and hold for 5 seconds, then to N.
- Turn off the engine.
- Release the parking brake.
- Leave the ignition switch in the ACCESSORY (I) position so the steering wheel does not lock.

NOTICE

Improper towing preparation will damage the transmission. Follow the above procedure exactly. If you cannot shift the transmission or start the engine, your vehicle must be transported with the front wheels off the ground.

With the front wheels on the ground, it is best to tow the vehicle no farther than 50 miles (80 km), and keep the speed below 35 mph (55 km/h).

NOTICE

Trying to lift or tow your vehicle by the bumpers will cause serious damage. The bumpers are not designed to support the vehicle's weight.

NOTICE

The steering system can be damaged if the steering wheel is locked. Leave the ignition switch in the ACCESSORY (I) position, and make sure the steering wheel turns freely before you begin towing.

If Your Vehicle Gets Stuck

If your vehicle gets stuck in sand, mud, or snow, call a towing service to pull it out (see page 376).

For very short distances, such as freeing the vehicle, you can use the detachable towing hook that mounts on the anchor in the front bumper.

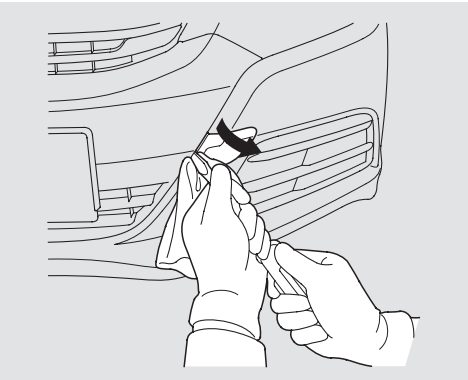

To use the towing hook:

1. Remove the cover from the front bumper using your fingers, or pry it off using a cloth and a flat-tip screwdriver to prevent scratches.

2. Remove the towing hook and wheel nut wrench from the tool case in the cargo area.

CONTINUED

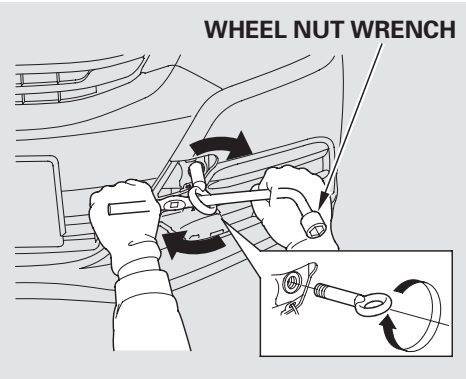

3. Screw the towing hook into the hole, and tighten it with the wheel nut wrench.

NOTICE

To avoid damage to your vehicle, use the towing hook for straight, flat ground towing only. Do not tow at an angle. The tow hook should not be used to tow the vehicle onto a flat bed. Do not use it as a tie down.

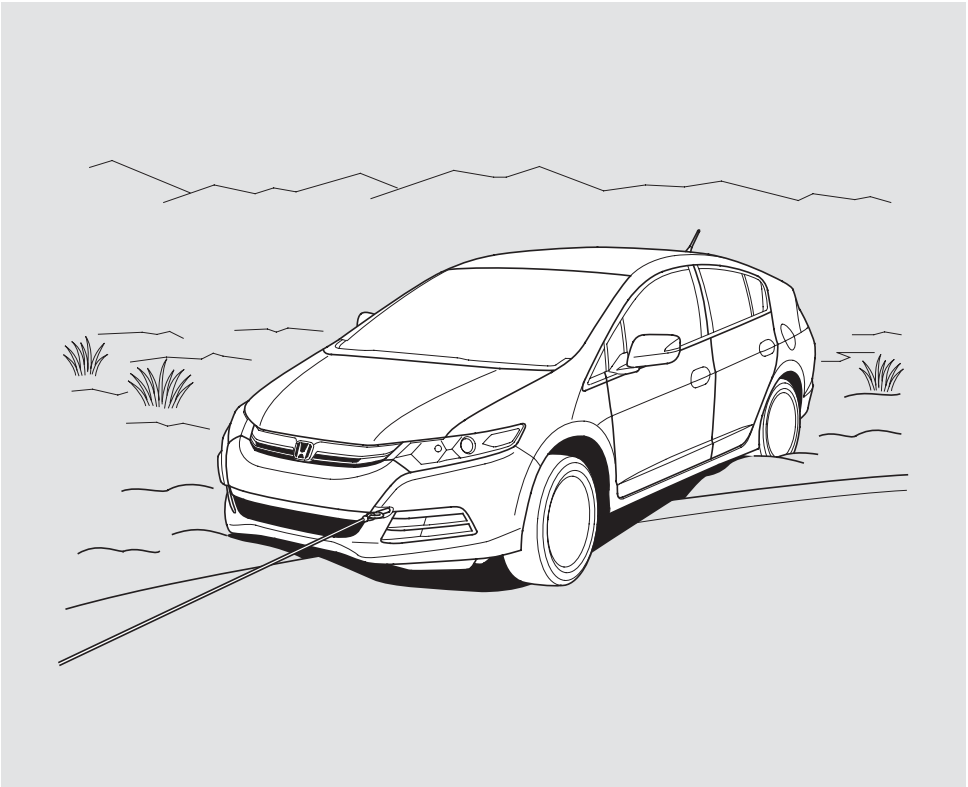

The diagrams in this section give you the dimensions and capacities of your vehicle and the locations of the identification numbers. It also includes information you should know about your vehicle's tires and emissions control systems.

Identification Numbers 380
Specifications 382
DOT Tire Quality Grading (U.S. Vehicles) 384
Uniform Tire Quality Grading 384
Treadwear 384
Traction..... 384
Temperature 385
Tire Labeling..... 385
Tire Pressure Monitoring System (TPMS) — Required Federal Explanation..... 387
Emissions Controls..... 389
The Clean Air Act..... 389
Crankcase Emissions Control System..... 389
Evaporative Emissions Control System..... 389
Onboard Refueling Vapor Recovery 389
Exhaust Emissions Controls 390
PGM-FI System 390
Ignition Timing Control System..... 390
Exhaust Gas Recirculation (EGR) System..... 390
Three Way Catalytic Converter..... 390
Replacement Parts..... 390
Three Way Catalytic Converter... 391
Emissions Testing 392

Your vehicle has several identifying numbers in various places.

The vehicle identification number (VIN) is the 17-digit number your dealer uses to register your vehicle for warranty purposes. It is also necessary for licensing and insuring your vehicle. The easiest place to find the VIN is on a plate fastened to the top of the dashboard. You can see it by looking through the windshield on the driver's side. It is also on the certification label attached to the driver's doorjamb, and is stamped on the engine compartment bulkhead. The VIN is also provided in bar code on the certification label.

The VIN is also located on the engine bulkhead. Remove the cover on the engine compartment bulkhead to view the VIN. Always close the cover when finished.

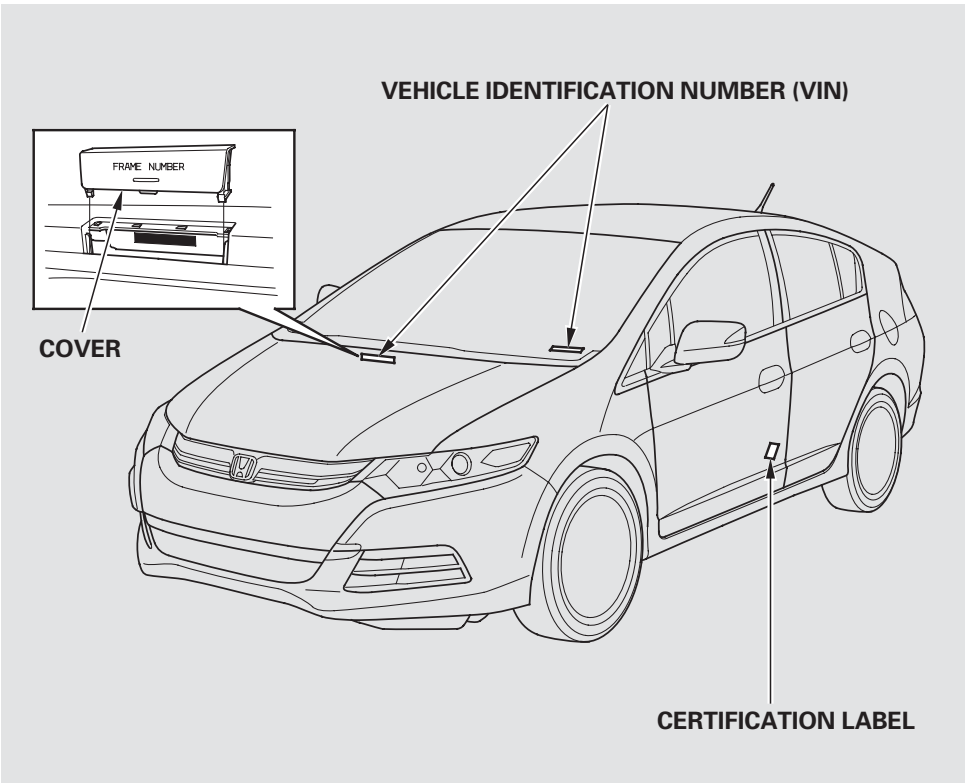

The engine number is stamped into the engine block.

The transmission number is on a label on top of the transmission.

The IMA Motor Number is stamped on the motor housing.

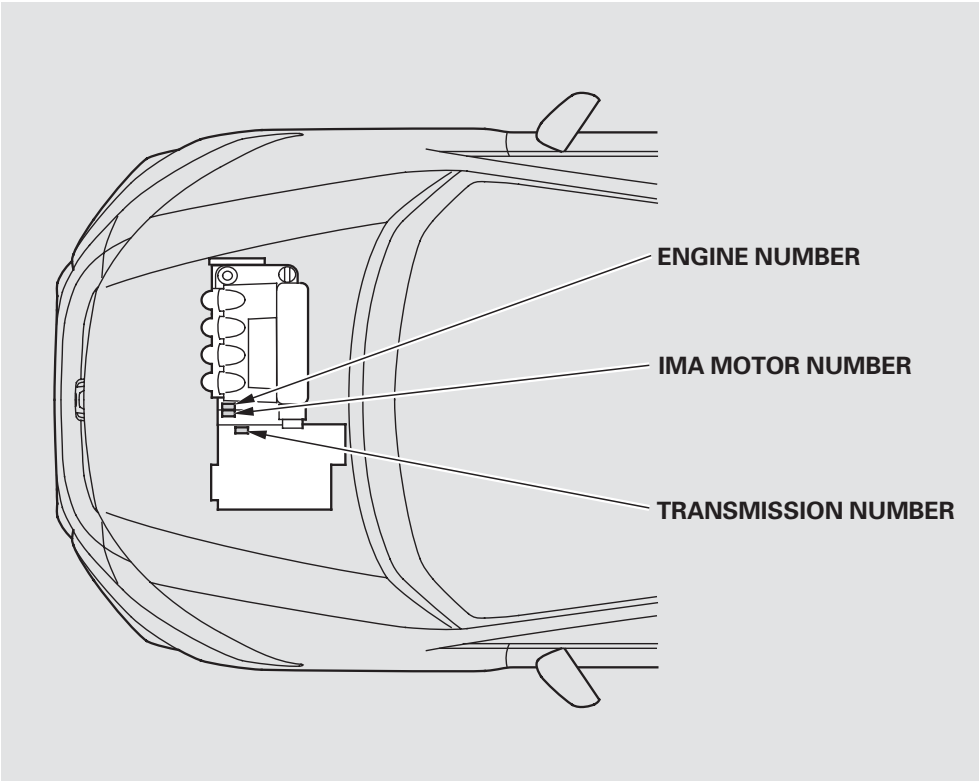

Specifications

Dimensions

Length		172.3 in (4,377 mm)
Width		66.7 in (1,695 mm)
Height		56.2 in (1,427 mm)
Wheelbase		100.4 in (2,550 mm)
Track	Front	58.3 in (1,481 mm)
	Rear	58.0 in (1,472 mm)

Weights

Gross vehicle weight rating	See the certification label attached to the driver's doorjamb.

Seating Capacities

Total	5
Front	2
Rear	3

Engine

Type	Water cooled 4-stroke SOHC i-VTEC gasoline engine with Hybrid Electric Motor
Bore x Stroke	2.87 x 3.15 in (73.0 x 80.0 mm)
Displacement	82 cu-in (1,339 cm^3)
Compression ratio	10.8 : 1
Spark plugs	DILFR6J11(NGK)

Capacities

Fuel tank		Approx. 10.6 US gal (40 ℓ)
Engine coolant	Change*1	1.165 US gal (4.41 ℓ)
	Total	1.295 US gal (4.90 ℓ)
Engine oil	Change*2	
	Including filter	3.4 US qt (3.2 ℓ)
	Without filter	3.2 US qt (3.0 ℓ)
	Total	4.0 US qt (3.8 ℓ)
Automatic transmission fluid (CVTF)	Change	3.0 US qt (2.8 ℓ)
	Total	5.5 US qt (5.2 ℓ)
Windshield washer reservoir	U.S. Vehicles	2.6 US qt (2.5 ℓ)
	Canada Vehicles	4.76 US qt (4.50 ℓ)

*1 : Including the coolant in the reserve tank and that remaining in the engine
Reserve tank capacity: 0.116 US gal (0.44 ℓ)

*2 : Excluding the oil remaining in the engine

Air Conditioning

Refrigerant type	HFC-134a (R-134a)
Charge quantity	15.8－17.6 oz (450－500 g)
Lubricant oil type	SP-10

Lights

Headlights	High	12 V － 60 W (HB3)
	Low	12 V － 55 W (H11)
Front turn signal lights		12 V － 21 W (Amber)
Front parking lights		12 V － 5 W
Front side marker lights		12 V － 5 W
Side turn signal lights (door mirror)*1		LED type*2
Rear turn signal lights		12 V － 21 W (Amber)
Stop/taillights		LED type*2
Back-up lights		12 V － 16 W
Rear side marker lights		12 V － 2 CP
License plate lights		12 V － 5 W
Spot lights*1 *3		12 V － 8 W
Ceiling light		12 V － 8 W
Cargo area light		12 V － 5 W
High-mount brake light		LED type*2
Glove box light*1		12 V － 3.4 W

*1 : EX models
*2 : Replacement of a light bulb should be done by your dealer.
*3 : LX model

12 Volt Battery

Capacity	12 V － 35 AH/20 HR 12 V － 28 AH/5 HR

Fuses

Interior	See page 374 or the fuse label attached to the inside of the fuse box door under the steering column.
Under-hood	See page 375 or the fuse box cover.

Alignment

Toe-in	Front	0 ± 0.12 in (0 ± 3 mm)
	Rear	in 0.10 ± 0.10 in (2.5 ± 2.5 mm)
Camber	Front	0° ± 1°
	Rear	－1.5° ± 1°
Caster	Front	3°30′ ± 0.5°

Tires

Size	Front/Rear	P185/60R15 84T
	Spare	T135/80D15 99M
Pressure	Front/Rear	33 psi (230 kPa , 2.3 kgf/cm^2)
	Spare	60 psi (420 kPa , 4.2 kgf/cm^2)

DOT Tire Quality Grading (U.S. Vehicles)

The tires on your vehicle meet all U.S. Federal Safety Requirements. All tires are also graded for treadwear, traction, and temperature performance according to Department of Transportation (DOT) standards. The following explains these gradings.

Uniform Tire Quality Grading
Quality grades can be found where applicable on the tire sidewall between tread shoulder and maximum section width. For example:

Treadwear 200
Traction AA
Temperature A

All passenger car tires must conform to Federal Safety Requirements in addition to these grades.

Treadwear
The treadwear grade is a comparative rating based on the wear rate of the tire when tested under controlled conditions on a specified government test course. For example, a tire graded 150 would wear one and one-half (1 1/2) times as well on the government course as a tire graded 100. The relative performance of tires depends upon the actual conditions of their use, however, and may depart significantly from the norm due to variations in driving habits, service practices and differences in road characteristics and climate.

Traction
The traction grades, from highest to lowest, are AA, A, B, and C. Those grades represent the tire's ability to stop on wet pavement as measured under controlled conditions on specified government test surfaces of asphalt and concrete. A tire marked C may have poor traction performance.

Warning: The traction grade assigned to this tire is based on straight-ahead braking traction tests, and does not include acceleration, cornering, hydroplaning, or peak traction characteristics.

Temperature
The temperature grades are A (the highest), B, and C, representing the tire's resistance to the generation of heat and its ability to dissipate heat when tested under controlled conditions on a specified indoor laboratory test wheel. Sustained high temperature can cause the material of the tire to degenerate and reduce tire life, and excessive temperature can lead to sudden tire failure. The grade C corresponds to a level of performance which all passenger car tires must meet under the Federal Motor Vehicle Safety Standard No. 109. Grades B and A represent higher levels of performance on the laboratory test wheel than the minimum required by law.

Warning: The temperature grade for this tire is established for a tire that is properly inflated and not overloaded. Excessive speed, underinflation, or excessive loading, either separately or in combination, can cause heat buildup and possible tire failure.

Tire Labeling
The tires that came on your vehicle have a number of markings. Those you should be aware of are described below.

TIRE LABELING EXAMPLE

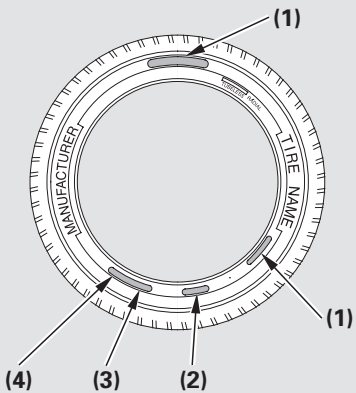

(1) Tire Size
(2) Tire Identification Number (TIN)
(3) Maximum Tire Pressure
(4) Maximum Tire Load

CONTINUED

Tire Size
Whenever tires are replaced, they should be replaced with tires of the same size. Following is an example of tire size with an explanation of what each component means.

P185/60R15 84T

P — Vehicle type (P indicates passenger vehicle).

185 — Tire width in millimeters.

60 — Aspect ratio (the tire's section height as a percentage of its width).

R — Tire construction code (R indicates radial).

15 — Rim diameter in inches.

84 — Load index (a numerical code associated with the maximum load the tire can carry).

T — Speed symbol (an alphabetical code indicating the maximum speed rating).

Tire Identification Number (TIN)
The tire identification number (TIN) is a group of numbers and letters that look like the following example. TIN is located on the sidewall of the tire.

DOT EUYU 2KNR 2202

DOT — This indicates that the tire meets all requirements of the U.S. Department of Transportation.

EUYU — Manufacturer's identification mark.

2KNR — Tire type code.

2202 — Date of manufacture.
Year
Week

Glossary of Tire Terminology

Cold Tire Pressure — The tire air pressure when the vehicle has been parked for at least three hours or driven less than 1 mile (1.6 km).

Load Rating — Means the maximum load that a tire is rated to carry for a given inflation pressure.

Maximum Inflation Pressure — The maximum tire air pressure that the tire can hold.

Maximum Load Rating — Means the load rating for a tire at the maximum permissible inflation pressure for that tire.

Recommended Inflation Pressure — The cold tire inflation pressure recommended by the manufacturer.

Treadwear Indicators (TWI) — Means the projections within the principal grooves designed to give a visual indication of the degrees of wear of the tread.

Tire Pressure Monitoring System (TPMS) — Required Federal Explanation

U.S. models only

Each tire, including the spare (if provided), should be checked monthly when cold and inflated to the inflation pressure recommended by the vehicle manufacturer on the vehicle placard or tire inflation pressure label.

(If your vehicle has tires of a different size than the size indicated on the vehicle placard or tire inflation pressure label, you should determine the proper tire inflation pressure for those tires.)

As an added safety feature, your vehicle has been equipped with a tire pressure monitoring system (TPMS) that illuminates a low tire pressure telltale

when one or more of your tires is significantly under-inflated.

Accordingly, when the low tire pressure telltale illuminates, you should stop and check your tires as soon as possible, and inflate them to the proper pressure.

CONTINUED

Driving on a significantly under-inflated tire causes the tire to overheat and can lead to tire failure. Under-inflation also reduces fuel efficiency and tire tread life, and may affect the vehicle's handling and stopping ability.

Please note that the TPMS is not a substitute for proper tire maintenance, and it is the driver's responsibility to maintain correct tire pressure, even if under-inflation has not reached the level to trigger illumination of the TPMS low tire pressure telltale.

Your vehicle has also been equipped with a TPMS malfunction indicator to indicate when the system is not operating properly. The TPMS malfunction indicator is combined with the low tire pressure telltale. When the system detects a malfunction, the telltale will flash for approximately one minute and then remain continuously illuminated. This sequence will continue upon subsequent vehicle start-ups as long as the malfunction exists.

When the malfunction indicator is illuminated, the system may not be able to detect or signal low tire pressure as intended.

TPMS malfunctions may occur for a variety of reasons, including the installation of replacement or alternate tires or wheels on the vehicle that prevent the TPMS from functioning properly.

Always check the TPMS malfunction telltale after replacing one or more tires or wheels on your vehicle to ensure that the replacement or alternate tires and wheels allow the TPMS to continue to function properly.

The burning of gasoline in your vehicle's engine produces several by-products. Some of these are carbon monoxide (CO), oxides of nitrogen (NOx), and hydrocarbons (HC). Gasoline evaporating from the tank also produces hydrocarbons. Controlling the production of NOx, CO, and HC is important to the environment. Under certain conditions of sunlight and climate, NOx and HC react to form photochemical "smog." Carbon monoxide does not contribute to smog creation, but it is a poisonous gas.

The Clean Air Act
The United States Clean Air Act* sets standards for automobile emissions. It also requires that automobile manufacturers explain to owners how their emissions controls work and what to do to maintain them. This section summarizes how the emissions controls work.

* In Canada, Honda vehicles comply with the Canadian emission requirements, as specified in an agreement with Environment Canada, at the time they are manufactured.

Crankcase Emissions Control System
Your vehicle has a positive crankcase ventilation system. This keeps gasses that build up in the engine's crankcase from going into the atmosphere. The positive crankcase ventilation valve routes them from the crankcase back to the intake manifold. They are then drawn into the engine and burned.

Evaporative Emissions Control System
As gasoline evaporates in the fuel tank, an evaporative emissions control canister filled with charcoal adsorbs the vapor. It is stored in this canister while the engine is off. After the engine is started and warmed up, the vapor is drawn into the engine and burned during driving.

Onboard Refueling Vapor Recovery
The onboard refueling vapor recovery (ORVR) system captures the fuel vapors during refueling. The vapors are adsorbed in a canister filled with activated carbon. While driving, the fuel vapors are drawn into the engine and burned off.

Exhaust Emissions Controls

The exhaust emissions controls include four systems: PGM-FI, ignition timing control, exhaust gas recirculation, and three way catalytic converter. These four systems work together to control the engine's combustion and minimize the amount of HC, CO, and NOx that come out the tailpipe. The exhaust emissions control systems are separate from the crankcase and evaporative emissions control systems.

PGM-FI System

The PGM-FI system uses sequential multiport fuel injection.
It has three subsystems: air intake, engine control, and fuel control. The powertrain control module (PCM) uses various sensors to determine how much air is going into the engine. It then controls how much fuel to inject under all operating conditions.

Ignition Timing Control System

This system constantly adjusts the ignition timing, reducing the amount of HC, CO, and NOx produced.

Exhaust Gas Recirculation (EGR) System

The exhaust gas recirculation (EGR) system takes some of the exhaust gas and routes it back into the intake manifold. Adding exhaust gas to the air/fuel mixture reduces the amount of NOx produced when the fuel is burned.

Three Way Catalytic Converter

The three way catalytic converter is in the exhaust system. Through chemical reactions, it converts HC, CO, and NOx in the engine's exhaust to carbon dioxide (CO_2), nitrogen (N_2), and water vapor.

Replacement Parts

The emissions control systems are designed and certified to work together in reducing emissions to levels that comply with the Clean Air Act. To make sure the emissions remain low, you should use only new Honda replacement parts or their equivalent for repairs. Using lower quality parts may increase the emissions from your vehicle.

The emissions control systems are covered by warranties separate from the rest of your vehicle. Read your warranty manual for more information.

The three way catalytic converter contains precious metals that serve as catalysts, promoting chemical reactions to convert the exhaust gasses without affecting the metals. The catalytic converter is referred to as a three-way catalyst, since it acts on HC, CO, and NOx. A replacement unit must be an original Honda part or its equivalent.

The three way catalytic converter must operate at a high temperature for the chemical reactions to take place. It can set on fire any combustible materials that come near it. Park your vehicle away from high grass, dry leaves, or other flammables.

THREE WAY CATALYTIC CONVERTERS

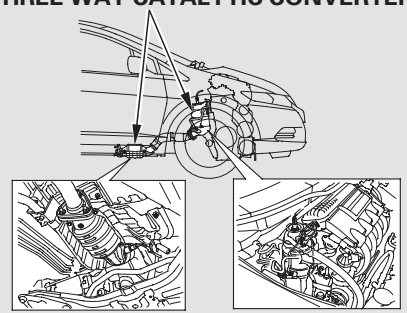

U.S. model is shown.

The defective three way catalytic converters contribute to air pollution, and can impair your engine's performance. Follow these guidelines to protect your vehicle's three way catalytic converters.

- Always use unleaded gasoline. Even a small amount of leaded gasoline can contaminate the catalyst metals, making the three way catalytic converter ineffective.
- Keep the engine well maintained.
- Have your vehicle diagnosed and repaired if it is misfiring, back-firing, stalling, or otherwise not running properly.

Testing of Readiness Codes
If you take your vehicle for an emissions test shortly after the battery has been disconnected or gone dead, it may not pass the test. This is because of certain “readiness codes” that must be set in the on-board diagnostics for the emissions systems. These codes are erased when the battery is disconnected, and set again only after several days of driving under a variety of conditions.

If the testing facility determines that the readiness codes are not set, you will be requested to return at a later date to complete the test. If you must get the vehicle retested within the next two or three days, you can condition the vehicle for retesting by doing the following.

1. Make sure the gas tank is nearly, but not completely, full (around 3/4).

2. Make sure the vehicle has been parked with the engine off for 6 hours or more.

3. Make sure the ambient temperature is between 40° and 95°F (4° and 35°C).

4. Without touching the accelerator pedal, start the engine, and let it idle for 20 seconds.

5. Keep the vehicle in Park. Increase the engine speed to 2,000 rpm, and hold it there for about 3 minutes.

6. Without touching the accelerator pedal, let the engine idle for 20 seconds.

7. Select a nearby lightly traveled major highway where you can maintain a speed of 50 to 60 mph (80 to 97 km/h) for at least 20 minutes. Drive on the highway in D. Do not use the cruise control. When traffic allows, drive for 90 seconds without moving the accelerator pedal. (Vehicle speed may vary slightly; this is okay.) If you cannot do this for a continuous 90 seconds because of traffic conditions, drive for at least 30 seconds, then repeat it two more times (for a total of 90 seconds).

8. Then drive in city/suburban traffic for at least 10 minutes. When traffic conditions allow, let the vehicle coast for several seconds without using the accelerator pedal or the brake pedal.

9. Make sure the vehicle has been parked with the engine off for 30 minutes.

If the testing facility determines the readiness codes are still not set, see your dealer.

Warranty and Customer Relations

Customer Service Information..... 396
Warranty Coverages 397
Reporting Safety Defects..... 398
Authorized Manuals..... 399

Honda dealership personnel are trained professionals. They should be able to answer all your questions. If you encounter a problem that your dealership does not solve to your satisfaction, please discuss it with the dealership's management. The service manager or general manager can help. Almost all problems are solved in this way.

If you are dissatisfied with the decision made by the dealership's management, contact Honda Customer Service.

U.S. Owners:
American Honda Motor Co., Inc.
Honda Automobile Customer Service
Mail Stop 500-2N-7A
1919 Torrance Boulevard
Torrance, California 90501-2746

Tel: (800) 999-1009

Canadian Owners:
Honda Canada Inc.
Customer Relations
180 Honda Boulevard
Markham, ON
L6C 0H9

Tel: 1-888-9-HONDA-9
Fax: 1-877-939-0909
E-Mail: honda_cr@ch.honda.com

In Puerto Rico and the U.S. Virgin Islands:
Bella International
P.O. Box 190816
San Juan, PR 00919-0816

Tel: (787) 620-7546

When you call or write, please give us this information:

- Vehicle Identification Number (see page 380)
- Name and address of the dealer who services your vehicle
- Date of purchase
- Odometer reading of your vehicle
- Your name, address, and telephone number
- A detailed description of the problem
- Name of the dealer who sold the vehicle to you

U.S. Owners
Your new vehicle is covered by these warranties:

New Vehicle Limited Warranty — covers your new vehicle, except for the emissions control systems and accessories, against defects in materials and workmanship.

Emissions Control Systems Defects Warranty and Emissions Performance Warranty — these two warranties cover your vehicle's emissions control systems. Time, mileage, and coverage are conditional. Please read your warranty booklet for exact information.

Seat Belt Limited Warranty — a seat belt that fails to function properly is covered by a limited warranty. Please read your warranty booklet for details.

Rust Perforation Limited Warranty — all exterior body panels are covered for rust-through from the inside for the specified time period with no mileage limit.

Accessory Limited Warranty — Honda accessories are covered under this warranty. Time and mileage limits depend on the type of accessory and other factors. Please read your warranty booklet for details.

Replacement Parts Limited Warranty — covers all Honda replacement parts against defects in materials and workmanship.

Replacement Battery Limited Warranty — provides prorated coverage for a replacement battery purchased from your dealer.

Replacement Muffler Lifetime Limited Warranty — provides coverage for as long as the purchaser of the muffler owns the vehicle.

Restrictions and exclusions apply to all these warranties. Please read the 2012 Honda warranty information booklet that came with your vehicle for precise information on warranty coverages. Your vehicle's original tires are covered by their manufacturer. Tire warranty information is in a separate booklet.

Canadian Owners
Please refer to the 2012 warranty manual that came with your vehicle.

In the US
If you believe that your vehicle has a defect which could cause a crash or could cause injury or death, you should immediately inform the National Highway Traffic Safety Administration (NHTSA), in addition to notifying American Honda Motor Co., Inc.

If NHTSA receives similar complaints, it may open an investigation, and if it finds that a safety defect exists in a group of vehicles, it may order a recall and remedy campaign. However, NHTSA cannot become involved in individual problems between you, your dealer, or American Honda Motor Co., Inc.

To contact NHTSA, you may call the Vehicle Safety Hotline toll-free at 1-888-327-4236
(TTY: 1-800-424-9153); go to
http://www.safercar.gov; or write to: Administrator, NHTSA, 1200 New Jersey Avenue, SE., Washington, DC 20590.
You can also obtain other information about motor vehicle safety from *http://www.safercar.gov*.

In Canada
If you believe that your vehicle has a defect which could cause a crash or could cause injury or death, you should immediately inform Honda Canada Inc. and you may also inform Transport Canada.

If Transport Canada receives similar complaints, it may open an investigation, and if it finds that a safety defect exists in a group of vehicles, it may lead to a recall and remedy campaign. However, Transport Canada cannot become involved in individual problems between you, your dealer, or Honda Canada Inc.

To contact Transport Canada's Defect Investigations and Recalls Division, you may call 1-800-333-0510. For more information on reporting safety defects or about motor vehicle safety, go to *http://www.tc.gc.ca/roadsafety*.

Purchasing Factory Authorized Manuals (U.S. only)

The publications shown below can be purchased from Helm Incorporated. You can order by phone or online:

- Call Helm Inc. at 1-800-782-4356 (credit card orders only)
- Go online at *www.helminc.com*

If you are interested in other years or models, contact Helm Inc. at 1-800-782-4356.

Publication Form Number	Form Description
61TM802	2012 Honda Insight Service Manual
61TM802EL	2012 Honda Insight Electrical Troubleshooting Manual
61TM830	2012 Model Series Honda Insight Body Repair Manual
31TM8620	2012 Honda Insight Owner's Manual
31TM8820	2012 Honda Insight Navigation System Owner's Manual
31TM8M20	2012 Honda Insight Honda Service History
31TM8Q20	2012 Honda Insight Technology Reference Guide
HON-R	Order Form for Previous Years- Indicate Year and Model Desired

Service Manual:
Covers maintenance and recommended procedures for repair to engine and chassis components. It is written for the journeyman mechanic, but it is simple enough for most mechanically inclined owners to understand.

Electrical Troubleshooting Manual:
Complements the Service Manual by providing in-depth troubleshooting information for each electrical circuit in your vehicle.

Body Repair Manual:
Describes the procedures involved in the replacement of damaged body parts.

A

Accessories 256
ACCESSORY (Ignition Key Position) 131
Accessory Power Socket 157
Active Head Restraints 144
Additives, Engine Oil 313
Airbag (SRS) 10, 25
Airbags, Additional Information 25
  Additional Safety Precautions 37
  Advanced Airbag System 30
  Airbag Service 36
  How the Passenger Airbag Off Indicator Works 35
  How the Side Airbag Off Indicator Works 34
  How the SRS Indicator Works ... 34
  How Your Front Airbags Work 28
  How Your Side Airbags Work 32
  How Your Side Curtain Airbags Work 33
  SRS Components 25
Air Conditioning System 164
Air Pressure, Tires 341
Ambient Meter 72
Antifreeze 317
Anti-lock Brakes (ABS)
  Indicator 64, 289
  Operation 289
Anti-theft, Audio System 221
Anti-theft Steering Column Lock 131
Armrest 146
Audio System 170
Auto Door Locking 109
Auto Door Unlocking 110
Auto Idle Stop 283
Automatic Seat Belt Tensioners 23
Automatic Speed Control 224
Automatic Transmission (CVT) .. 273
  Capacity, Fluid 382
  Checking Fluid Level 420
  Paddle Shifters in the D Position 278
  Paddle Shifters in the S Position 281
  Recommended Shift Points 282
  Shifting 274
  Shift Lever Position Indicators 273
  Shift Lever Positions 275
  Shift Lock Release 277
Auxiliary Input Jack 220

B

Battery
  Charging System Indicator 63, 366
  Jump Starting 360
  Maintenance 346
  Specifications 383
Before Driving 245
Belts, Seat 9, 21
Beverage Holder 156
Bluetooth® HandsFreeLink® 227
Brakes
  Anti-lock System (ABS) 289
  Break-in, New Linings 246
  Bulb Replacement 332
  Fluid 321
  Pad Wear Indicator 288
  Parking 151
  System Indicator 63, 64, 368

CONTINUED

Braking System 287
Break-in, New Vehicle 246
Brightness Control,
  Instruments 124
Bulb Replacement
  Back-up Lights 329
  Brake Lights 332
  Front Side Marker Lights 328
  Front Turn Signal Lights 327
  Headlights 323
  Parking Lights 326
  Rear Turn Signal Lights 329
  Specifications 383
Bulbs, Halogen 323

C

Cargo Area Cover 153
Cargo Area Light 162
Capacities Chart 382
Carbon Monoxide Hazard 56
Carrying Cargo 258
CAUTION, Explanation of iii
Ceiling Light 161
Center Pockets 159
Center Tray 158
Certification Label 380
Chains 314
Changing a Flat Tire 351
Changing Oil
  How to 314
  When to 301
Charging System Indicator 63, 366
Checklist, Before Driving 264
Child Safety 38
Child Seats
  LATCH Anchor System 47
  Lower Anchor 47
  Tether Anchor 51
Childproof Door Locks 134
Climate Control 164
Clock, Setting the 222
CO in the Exhaust 389
Cold Weather, Starting in 265
Compact Spare 350
Console Compartment 158
Controls, Instruments and 59
Coolant
  Adding 317
  Checking 252
  Proper Solution 317
  Temperature Indicator 67
Crankcase Emissions Control
  System 389
Cruise Control Operation 224
Customer Service 396

D

DANGER, Explanation of iii
Dashboard 3, 60
Daytime Running Lights 123
Defects, Reporting Safety 398
Defogger, Rear Window 126
Defrosting the Windows 167, 168
Dimensions 382
Dimming the Headlights 120
Dipstick
  Automatic Transmission 320
  Engine Oil 251
Directional Signals 120
Disc Brake Pad Wear
  Indicators 288
Disc Player 190
Disposal of Used Oil 316

Doors
Auto Door Locking 109
Auto Door Unlocking 110
Childproof Door Locks 134
Locking and Unlocking 133
DOT Tire Quality Grading 384
Driver and Passenger Safety 5
Driving 263
Economy 253
Dust and Pollen Filter 334

E

Eco Assist System 266
Eco Guide Feedback Monitor 81
ECON Button 124
ECON Mode 124
Economy, Fuel 253
Emergencies on the Road 349
Battery, Jump Starting 360
Brake System Indicator 63, 368
Changing a Flat Tire 351
Charging System Indicator 63, 366
Checking the Fuses 371
Low Oil Pressure Indicator 62, 365
Malfunction Indicator Lamp 62, 367
Overheated Engine 362
Emergency Brake 151
Emergency Flashers 125
Emergency Hatch Opener 140
Emergency Towing 376
Emissions Controls 389
Emissions Testing 392
Engine
Adding Engine Coolant 317
Coolant Temperature Indicator 67
If It Won't Start 358
Malfunction Indicator Lamp 62, 367
Oil Life Display 301
Oil Pressure Indicator 62, 365
Oil, What Kind to Use 312
Overheating 362
Specifications 382
Speed Limiter 276
Starting 265
Evaporative Emissions Controls 389
Exhaust Fumes 56
Expectant Mothers, Use of Seat Belts by 19

F

Fan, Interior 166
Features 163
Filling the Fuel Tank 247
Filters
Dust and Pollen 334
Oil 315
Flashers, Hazard Warning 125
Flat Tire, Changing a 351
Floor Mats 333
Fluids
Automatic Transmission 320
Brake 321
Windshield Washer 319
FM Stereo Radio Reception 214
Four-way Flashers 125
Front Airbags 10, 25

CONTINUED

Fuel 246
Fill Door and Cap 247
Gauge 73
Octane Requirement 246
Oxygenated 246
Reserve Indicator 70
Tank, Filling the 247
Fuses, Checking the 371

G

Gas Mileage, Improving 253
Gasoline 246
Fuel Reserve Indicator 70
Gauge 73
Octane Requirement 246
Tank, Filling the 247
Gas Station Procedures 247
Gauges
Charge/Assist 74
Fuel 73
Gearshift Lever Positions 273
Automatic Transmission 273
Glove Box 158

H

Halogen Headlight Bulbs 323
HandsFreeLink® 227
Hatch 139
Opening 139
Open Indicator 68
Hazard Warning Flashers 125
Headlights
Aiming 323
Daytime Running Lights 123
High Beam Indicator 69
Reminder Beeper 121
Replacing Halogen Bulbs 323
Turning on 121
Head Restraints 142
Heated Mirrors 148
High Altitude, Starting at 265
High-Low Beam Switch 120
Hill Start Assist System 297
Hood, Opening the 250
Horn 4

I

Identification Number, Vehicle 380
Ignition
Keys 129
Switch 131
Timing Control System 390
IMA System Power Flow
Monitor 84
Immobilizer System 130
Important Safety Precautions 6
Indicators, Instrument Panel 62
Indicators, Messages (MID) 62, 89
ABS (Anti-lock Brake) 64
Auto Idle Stop 66
Brake (Parking and Brake
System) 63, 368
Cruise Control 69
Cruise Main 69
Door/Hatch Open 12, 68
DRL (Daytime Running
Lights) 123
EPS (Electric Power Steering) 68
ECON Mode 71
High Beam 69
High Temperature (Coolant) 67
IMA Battery Level 85
IMA System 66
Key (Immobilizer System) 63

Indicators, Messages (MID)
Lights On 69
Low Fuel 70
Low Oil Pressure 62, 365
Low Temperature (Coolant) 67
Low Tire Pressure/
TPMS 66, 291
Malfunction Indicator Lamp 367
Security System 70
Side Airbag Off 65
Seat Belt..... 21, 62
SRS 34, 64
System Message 70
TPMS 341, 342
Turn Signal and Hazard
Warning 69
12 Volt Battery Charging
System..... 63, 366
VSA Off 65
VSA System 65
Infant Restraint 43
Infant Seats
LATCH Anchorage System 47
Lower Anchors 47
Tether Anchors..... 51
Inflation, Recommended Tire 341
Pressures 341
Information Display..... 72
Inside Mirror 147
Inspection, Tire 341
Instrument Panel 61
Instrument Panel Brightness 124
Interior Lights 161
Introduction i
iPod® 197

J

Jacking up the Vehicle 353
Jack, Tire 352
Jump Starting 360

K

Keys..... 129

L

Label, Certification 380
Lane Change, Signaling 121
Lap/Shoulder Belts 17, 22
LATCH Anchorage System..... 47
Lights
Bulb Replacement 323
Indicator..... 69
Parking..... 118
Turn Signal 118
Load Limits..... 259
LOCK (Ignition Key Position) 131
Locks
Anti-theft Steering Column 131
Fuel Fill Door 248
Hatch..... 139
Power Door 133
Low Coolant Level..... 252
Low Fuel Indicator 70
Lower Anchors..... 47
Low Oil Pressure Indicator 62, 365
Lubricant Specifications Chart 382

CONTINUED

M

Maintenance 299
Main Items and Sub Items 306
Minder 301
Owner's Maintenance Checks 309
Safety 300
Malfunction Indicator Lamp .. 62, 367
Meters, Gauges 61, 72
Methanol in Gasoline 246
Mirrors 147
Adjusting 147
Heated 148

N

Neutral Gear Position 275
New Vehicle Break-in 246
NOTICE, Explanation of i
Numbers, Identification 380

O

Octane Requirement, Gasoline 246, 296
Odometer 79
Oil
Change, How to 314
Change, When to 301
Checking Engine 251
Pressure Indicator 62, 365
Selecting Proper Viscosity 313
ON (Ignition Key Position) 132
Onboard Refueling Vapor Recovery 389
Outside Mirrors 147
Outside Temperature Indicator 80
Overheating, Engine 362
Owner's Maintenance Checks 309
Oxygenated Fuels 240

P

Paddle Shifters 278
Panel Brightness Control 124
Park Gear Position 275
Parking 286
Parking Brake 151
Parking Brake and Brake System Indicator 63, 368
Parking Lights 120
Parking Over Things that Burn ... 286
PGM-FI System 390
Playing the Radio 171, 183
Playing a Disc 175, 190
Playing an iPod® 197
Playing a USB Flash Memory Device 204
Pollen Filter 334
Pregnancy, Using Seat Belts 19
Protecting Adults and Teens 12
Additional Safety Precautions 20
Advice for Pregnant Women 19
Protecting Children 38
Protecting Infants 43
Protecting Larger Children 52
Protecting Small Children 44

R

Radiator Overheating 362
Radio/Disc/Sound System 170
Radio Theft Protection 221
Readiness Codes 367, 392
Rear Lights, Bulb Replacement 329
Rear View Mirror 147

Rear Window Defogger 126
Reclining the Seat-backs..... 141
Recommended Shift Points..... 282
Remote Audio Controls..... 219
Remote Transmitter..... 135
Replacement Information
  Dust and Pollen Filter 334
  Engine Oil and Filter 314
  Fuses 371
  Light Bulbs 323
  Maintenance Minder™..... 301
  Tires 340
  Wiper Blades 337
Replacing Seat Belts After a Crash 24
Reporting Safety Defects..... 398
Reserve Tank, Engine Coolant..... 252, 317
Restraint, Child 38
Reverse Gear Position..... 275
Rotation, Tire 343

S

Safety Belts..... 9, 21
Safety Defects, Reporting..... 398
Safety Features 8
  Airbags..... 10
  Seat Belts 9
Safety Labels, Location of 57
Safety Messages iii
Seat Belts 9, 21
  Additional Information..... 21
  Automatic Seat Belt Tensioners..... 23
  Cleaning 333
  Lap/Shoulder Belt..... 17, 22
  Maintenance..... 24, 333
  Reminder Light and Beeper..... 21, 62
  System Components..... 21
  Use During Pregnancy..... 19
  Wearing a Lap/Shoulder Belt 17, 22
Seats, Adjusting the..... 141
Security System 223
Serial Number 380
Service Intervals 310
Service Manual 399
Service Station Procedures 247
Setting the Clock 222
Shift Lever Position Indicators 273
Shift Lock Release..... 277
Side Airbags 10, 32
  Off Indicator..... 34, 65
Side Curtain Airbags 33
Side Marker Lights, Bulb Replacement..... 328
Signaling Turns..... 121
Snow Tires..... 344
Spare Tire
  Inflating..... 350
  Specifications 383
Specifications Charts..... 382
Speed Control..... 224
Speed-Sensitive Volume Compensation (SVC) 189
Spotlights 161

CONTINUED

SRS, Additional Information..... 25
Additional Safety Precautions.... 37
Advanced Airbag System 30
Airbag Service..... 36
How the Passenger Airbag Off Indicator Works..... 35
How the Side Airbag Off Indicator Works..... 34
How the SRS Indicator Works... 34
How Your Front Airbags Work..... 28
How Your Side Airbags Work.... 32
How Your Side Curtain Airbags Work..... 33
SRS Components 25
SRS Indicator..... 34, 64
START (Ignition Key Position) ... 131
Starting the Engine..... 265
In Cold Weather at High Altitude 265
With a Dead Battery 360
Steam Coming from Engine..... 362
Steering Wheel
Adjustments 128
Anti-theft Column Lock 131
Storing Your Vehicle..... 348
Sun Visors..... 160
Supplemental Restraint System
Servicing 36
SRS Indicator..... 34, 64
System Components..... 25
SVC..... 189
Synthetic Oil..... 313

T

Taillights, Changing Bulbs 332
Taking Care of the Unexpected .. 349
Technical Descriptions
DOT Tire Quality Grading..... 384
Emissions Control Systems..... 389
Emissions Testing 392
Oxygenated Fuels..... 246
Three Way Catalytic Converter..... 391
Temperature Indicator..... 67
Tether Anchorage Points 51
Theft Protection..... 221
Three Way Catalytic Converter... 390
Tighten Fuel Cap Message..... 249
Time, Setting the 222
Tire Chains..... 344
Tire, How to Change a Flat 351
Tire Information 384
Tire Labeling..... 385
Tire Pressure Monitoring System (TPMS) 291, 387
Check TPMS..... 387
Low Tire Pressure/TPMS Indicator..... 66, 291
Required Federal Explanation..... 387
Tires 340
Air Pressure 341
Chains 344
Checking Wear 342
Compact Spare..... 350
DOT Tire Quality Grading..... 384
Inflation..... 340
Inspection 341
Maintenance..... 342
Replacing 343
Rotating..... 343
Service Life..... 342

Tires
Snow 344
Specifications 383
Tools, Tire Changing 352
Towing
A Trailer..... 298
Emergency Towing 376
Transmission
Checking Fluid Level, Automatic 320
Fluid Selection..... 321
Identification Number..... 381
Shifting the Automatic..... 274
Treadwear 342
Trip Meter 79
Turn Signals 121

U

Unexpected, Taking Care of the 349
Uniform Tire Quality Grading 384
Unleaded Gasoline..... 246
USB Adapter Cable 207
USB Flash Memory Device..... 205
Used Oil, How to Dispose of 316

V

Vanity Mirror 160
Vehicle Capacity Load 259
Vehicle Dimensions..... 382
Vehicle Identification Number..... 380
Vehicle Stability Assist (VSA®) System..... 295
VSA Activation Indicator 65, 295
VSA Off Switch 296
VSA System Indicator 65, 295
Vehicle Storage 348
Ventilation 167
VIN 380
Viscosity, Oil..... 313

W

WARNING, Explanation of iii
Warning Labels, Location of 57
Warranty Coverages 397
Washer, Windshield
Checking the Fluid Level 319
Operation 119
Wheels
Adjusting the Steering 128
Alignment and Balance..... 342
Cleaning 345
Compact Spare 350
Nut Wrench..... 352
Windows
Auto Reverse..... 150
Operating the Power 149
Rear, Defogger 167
Windshield
Cleaning 119
Defroster 168
Washers 119
Wipers, Windshield
Changing Blades..... 334
Operation 119
Worn Tires 341
Wrecker, Emergency Towing..... 376

Service Information Summary

Gasoline:
Unleaded gasoline, pump octane number of 87 or higher.

Fuel Tank Capacity:
10.6 US gal (40 ℓ)

Recommended Engine Oil:
API Premium grade 0W-20 detergent oil (see page 362).

Oil change capacity (including filter):
3.4 US qt (3.2 ℓ)

Automatic Transmission Fluid (CVTF):
Use Honda CVT Fluid (continuously variable transmission fluid) only

Fluid change capacity:
3.0 US qt (2.8 ℓ)

Brake Fluid:
Honda Heavy Duty Brake Fluid DOT 3 preferred, or a DOT 3 or DOT 4 brake fluid as a temporary replacement (see page 371).

Tire Pressure (measured cold):
Front/Rear:
33 psi (230 kPa , 2.3 kgf/cm^2)

Spare Tire:
60 psi (420 kPa , 4.2 kgf/cm^2)