2015 PATHFINDER HYBRID

OWNER'S MANUAL

For your safety, read carefully and keep in this vehicle.

FOREWORD

Welcome to the growing family of new NISSAN owners. This vehicle is delivered to you with confidence. It was produced using the latest techniques and strict quality control.

This manual was prepared to help you understand the operation and maintenance of your vehicle so that you may enjoy many miles (kilometers) of driving pleasure. Please read through this manual before operating your vehicle.

A separate Warranty Information Booklet explains details about the warranties covering your vehicle. The "NISSAN Service and Maintenance Guide" explains details about maintaining and servicing your vehicle. Additionally, a separate Customer Care/Lemon Law Booklet (U.S. only) will explain how to resolve any concerns you may have with your vehicle, as well as clarify your rights under your state's lemon law.

Your NISSAN dealership knows your vehicle best. When you require any service or have any questions, they will be glad to assist you with the extensive resources available to them.

In addition to factory-installed options, your vehicle may also be equipped with additional accessories installed by NISSAN or by your NISSAN dealer prior to delivery. It is important that you familiarize yourself with all disclosures, warnings, cautions and instructions concerning proper use of such accessories prior to operating the vehicle and/or accessory. See a NISSAN dealer for details concerning the particular accessories with which your vehicle is equipped.

READ FIRST—THEN DRIVE SAFELY

Before driving your vehicle, please read this Owner's Manual carefully. This will ensure familiarity with controls and maintenance requirements, assisting you in the safe operation of your vehicle.

⚠ WARNING

IMPORTANT SAFETY INFORMATION REMINDERS FOR SAFETY!

Follow these important driving rules to help ensure a safe and comfortable trip for you and your passengers!

- **NEVER drive under the influence of alcohol or drugs.**
- **ALWAYS observe posted speed limits and never drive too fast for conditions.**
- **ALWAYS give your full attention to driving and avoid using vehicle features or taking other actions that could distract you.**
- **ALWAYS use your seat belts and appropriate child restraint systems. Pre-teen children should be seated in the rear seat.**
- **ALWAYS provide information about the proper use of vehicle safety features to all occupants of the vehicle.**
- **ALWAYS review this Owner's Manual for important safety information.**

For descriptions specified for 4-wheel drive models, a **4WD** mark is placed at the beginning of the applicable sections/items.

As with other vehicles with features for off-road use, failure to operate 4-wheel drive models correctly may result in loss of control or an accident. Be sure to read "Driving safety precautions" in the "Starting and driving" section of this manual.

ON-PAVEMENT AND OFF-ROAD DRIVING

This vehicle will handle and maneuver differently from an ordinary passenger car because it has a higher center of gravity for off-road use. As with other vehicles with features of this type, failure to operate this vehicle correctly may result in loss of control or an accident.

Be sure to read "On-pavement and off-road driving precautions", and "Avoiding collision and rollover", and "Driving safety precautions", in the "Starting and driving" section of this manual.

MODIFICATION OF YOUR VEHICLE

This vehicle should not be modified. Modification could affect its performance, safety or durability, and may even violate governmental regulations. In addition, damage or performance problems resulting from modifications may not be covered under NISSAN warranties.

This manual includes information for all features and equipment available on this model. Features and equipment in your vehicle may vary depending on model, trim level, options selected, order, date of production, region or availability. Therefore, you may find information about features or equipment that are not included or installed on your vehicle.

All information, specifications and illustrations in this manual are those in effect at the time of printing. NISSAN reserves the right to change specifications, performance, design or component suppliers without notice and without obligation. From time to time, NISSAN may update or revise this manual to provide Owners with the most accurate information currently available. Please carefully read and retain with this manual all revision updates sent to you by NISSAN to ensure you have access to accurate and up-to-date information regarding your vehicle. Current versions of vehicle Owner's Manuals and any updates can also be found in the Owner section of the NISSAN website at **https://owners.nissanusa.com/nowners/navigation/manualsGuide**. If you have questions concerning any information in your Owner's Manual, contact NISSAN Consumer Affairs. See the NISSAN CUSTOMER CARE PROGRAM page in this Owner's Manual for contact information.

IMPORTANT INFORMATION ABOUT THIS MANUAL

You will see various symbols in this manual. They are used in the following ways:

⚠ WARNING

This is used to indicate the presence of a hazard that could cause death or serious personal injury. To avoid or reduce the risk, the procedures must be followed precisely.

⚠ CAUTION

This is used to indicate the presence of a hazard that could cause minor or moderate personal injury or damage to your vehicle. To avoid or reduce the risk, the procedures must be followed carefully.

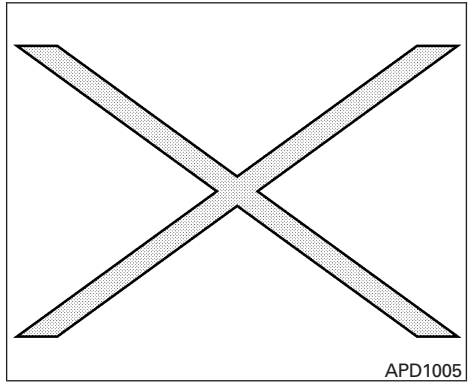

If you see this symbol, it means **"Do not do this"** or **"Do not let this happen."**

If you see a symbol similar to these in an illustration, it means the arrow points to the front of the vehicle.

Arrows in an illustration that are similar to these indicate movement or action.

Arrows in an illustration that are similar to these call attention to an item in the illustration.

CALIFORNIA PROPOSITION 65 WARNING

⚠ WARNING

Engine exhaust, some of its constituents, and certain vehicle components contain or emit chemicals known to the State of California to cause cancer and birth defects or other reproductive harm. In addition, certain fluids contained in vehicles and certain products of component wear contain or emit chemicals known to the State of California to cause cancer and birth defects or other reproductive harm.

CALIFORNIA PERCHLORATE ADVISORY

Some vehicle parts, such as lithium batteries, may contain perchlorate material. The following advisory is provided: "Perchlorate Material – special handling may apply, See www.dtsc.ca.gov/hazardouswaste/perchlorate/".

BLUETOOTH® is a trademark owned by Bluetooth SIG, Inc. and licensed to Visteon and Clarion.

SiriusXM® Satellite Radio requires subscription, sold separately. Not available in Alaska, Hawaii or Guam. For additional information, visit www.siriusxm.com.

© 2014 NISSAN NORTH AMERICA, INC.

All rights reserved. No part of this Owner's Manual may be reproduced or stored in a retrieval system, or transmitted in any form, or by any means, electronic, mechanical, photocopying, recording or otherwise, without the prior written permission of Nissan North America, Inc.

NISSAN CUSTOMER CARE PROGRAM

NISSAN CARES . . .

Both NISSAN and your NISSAN dealer are dedicated to serving all your automotive needs. Your satisfaction with your vehicle and your NISSAN dealer are our primary concerns. Your NISSAN dealer is always available to assist you with all your automobile sales and service needs.

However, if there is something that your NISSAN dealer cannot assist you with or you would like to provide NISSAN directly with comments or questions, please contact the NISSAN Consumer Affairs Department using our toll-free number:

For U.S. customers
1-800-NISSAN-1
(1-800-647-7261)

For Canadian customers
1-800-387-0122

The Consumer Affairs Department will ask for the following information:

- Your name, address, and telephone number
- Vehicle identification number (attached to the top of the instrument panel on the driver's side)
- Date of purchase
- Current odometer reading
- Your NISSAN dealer's name
- Your comments or questions

OR

You can write to NISSAN with the information at:

For U.S. customers
Nissan North America, Inc.
Consumer Affairs Department
P.O. Box 685003
Franklin, TN 37068-5003
or via e-mail at:
nnaconsumeraffairs@nissan-usa.com

For Canadian customers
Nissan Canada Inc.
5290 Orbitor Drive
Mississauga, Ontario L4W 4Z5
or via e-mail at:
information.centre@nissancanada.com

If you prefer, visit us at:
www.nissanusa.com (for U.S. customers) or
www.nissan.ca (for Canadian customers)

We appreciate your interest in NISSAN and thank you for buying a quality NISSAN vehicle.

Table of Contents

HEV Overview	HEV
Illustrated table of contents	0
Safety—Seats, seat belts and supplemental restraint system	1
Instruments and controls	2
Pre-driving checks and adjustments	3
Monitor, climate, audio, phone and voice recognition systems	4
Starting and driving	5
In case of emergency	6
Appearance and care	7
Maintenance and do-it-yourself	8
Technical and consumer information	9
Index	10

HEV Overview

NISSAN PUREDRIVE™ Hybrid System HEV-2
Lithium-ion (Li-ion) Battery. HEV-2
High-voltage cautions. HEV-3
Road accident cautions HEV-3
Emergency shut-off system HEV-4
Operation of the hybrid system. HEV-4
Starting and slow speed driving HEV-5
Medium or high speed driving. HEV-5
Rapid acceleration. HEV-5
Deceleration and braking HEV-5
Stopping HEV-5
Energy monitors HEV-6
Assist charge gauge HEV-6
Energy Flow
(models with navigation system). HEV-6
Fuel Economy
(models with navigation system). HEV-7
Fuel Economy
(models without navigation system). HEV-8
Fuel economy history
(models with navigation system). HEV-8
Fuel economy history
(models without navigation system). HEV-9
Regenerative brake HEV-10
Efficient use of your vehicle HEV-10
Hybrid vehicle precautions. HEV-10
High-voltage components and their locations . . HEV-10
Hybrid vehicle characteristics HEV-12

NISSAN PUREDRIVE™ HYBRID SYSTEM

The NISSAN PUREDRIVE™ Hybrid System combines the power of a gasoline engine and an electric motor to help minimize fuel consumption and emissions.

Depending on driving conditions, the vehicle runs on a combination of the gasoline engine and the electric motor, whichever is best for those conditions.

Because the gasoline engine charges the Lithium-ion (Li-ion) battery as needed, the battery does not have to be charged from an outside source like an all-electric vehicle.

⚠ WARNING

If you continue to drive the vehicle while the warning is displayed, the hybrid system may become temporarily inoperative and the system can not provide power to the wheels. This can result in reduced or zero vehicle speed. The reduced speed or zero speed may be lower than other traffic, which could increase the chance of a collision. If the vehicle cannot maintain a safe driving speed, pull to the side of the road in a safe area. If this occurs, place the shift lever in the "P" position, ignition in the READY position with the vehicle stopped until the display turns off. The Hybrid system overheat warning and the SHIFT "P" warning messages will be alternately displayed. For additional information, refer to "Shift to Park" in the "Instruments and controls" section of this manual.

LITHIUM-ION (Li-ion) BATTERY

⚠ WARNING

Your vehicle contains a sealed Lithium ion (Li-ion) high-voltage battery. If the Li-ion battery is disposed of improperly, there is a risk of severe burns and electrical shock that may result in serious injury or death and there is also a risk of environmental damage.

⚠ CAUTION

Do not misuse the Li-ion battery (to use the Li-ion battery for completely another purpose).

The Li-ion battery is used to drive the electric motors in the NISSAN PUREDRIVE™ Hybrid System.

The Li-ion battery has a limited service life. Contact your NISSAN dealer for information about recycling or disposal of the battery.

HIGH-VOLTAGE CAUTIONS

⚠ WARNING

- **The NISSAN PUREDRIVE™ Hybrid System uses high voltage up to approximately 144 volts. The system can be hot during and after starting. Be careful of both the high voltage and the high temperature. Obey the warning labels attached to the vehicle.**
- **Never disassemble, remove or replace high-voltage parts and harnesses as well as their connectors. Doing so can cause severe burns or electric shock that may result in serious injury or death. High-voltage harnesses are colored orange. The vehicle high-voltage system has no user serviceable parts. Take your vehicle to a NISSAN dealer for any necessary maintenance.**
- **Never try to remove the service plug located in the trunk. The service plug is used only when the vehicle is serviced by trained technicians wearing personal protection equipment and is part of the high-voltage system. Touching the service plug can cause severe burns or electric shock that may result in serious injury or death.**

ROAD ACCIDENT CAUTIONS

⚠ WARNING

In case of a collision:

- **If your vehicle is drivable, pull your vehicle off the road, put the transmission in the P (Park) position, apply the parking brake and turn the NISSAN PUREDRIVE™ Hybrid System off.**
- **Check to see if there are exposed high-voltage parts and cables. Never touch the parts and cables. For their locations, refer to "High-voltage components and their locations" in this section. To avoid personal injury, never touch high-voltage wiring, connectors, and other high-voltage parts, such as electric motor inverter and Li-ion battery. An electric shock may occur if exposed electric wires are visible when viewed from inside or outside of your vehicle. Therefore, never touch exposed electric wires.**
- **If the vehicle receives a strong impact to the floor while driving, stop the vehicle in a safe location and check the floor.**
- **Inspect the ground under the vehicle. If liquid has leaked onto the ground, the fuel system may have been damaged. Leave the vehicle as soon as possible.**
- **Leaks or damage to the Li-ion battery may result in a fire. If you discover them, contact emergency services immediately. Since the fluid leak may be lithium organic electrolyte from the Li-ion battery, never touch the fluid leak inside or outside the vehicle. If the fluid contacts your skin or eyes, wash it off immediately with a large amount of water and receive immediate medical attention to help avoid serious injury.**
- **If a fire occurs in the hybrid vehicle, leave the vehicle as soon as possible. Only use a type ABC, BC or C fire extinguisher that is meant for use on electrical fires. Using water or the incorrect fire extinguisher can result in serious injury or death from electrical shock.**
- **If you are not able to safely assess the vehicle due to vehicle damage, do not touch the vehicle. Leave the vehicle and contact emergency services. Advise first responders that this is a hybrid vehicle.**

- **In the event of an accident that requires body repair and painting, the vehicle should be delivered to a NISSAN dealer to have the Li-ion battery pack and high-voltage parts such as the inverter, including the wiring harness, removed prior to painting. Li-ion battery packs exposed to heat in the paint booth will experience capacity loss. Damaged Li-ion battery packs may also pose safety risks to untrained mechanics and repair personnel.**

EMERGENCY SHUT-OFF SYSTEM

The emergency shut-off system is activated and the high-voltage system automatically turns off in the following conditions:

- Front and side collisions in which the air bags are deployed.
- Certain rear collisions.
- Certain NISSAN PUREDRIVE™ Hybrid System malfunctions

For the above collisions and the certain hybrid system malfunctions, the READY to drive indicator light will turn off. For additional information, refer to “Warning/indicator lights and audible reminders” in the “Instruments and controls” section of this manual.

The emergency shut-off activates for the above collisions to minimize risk of an event that could cause injury or an accident. If the emergency shut-off system activates, the hybrid system may not switch to READY to drive position. Contact a NISSAN dealer. Even if the ignition switch is switched to READY to drive position, the system may shut off suddenly. Therefore, drive cautiously to the nearest NISSAN dealer or contact a NISSAN dealer as soon as possible.

OPERATION OF THE HYBRID SYSTEM

To start the NISSAN PUREDRIVE™ Hybrid System, depress the brake pedal and place the ignition switch in the ON position when the transmission is in the P (Park) position.

⚠ CAUTION

Do not start the system in N (Neutral) position under cold condition of the system. Start in the P (Park) position in that case.

The READY to drive indicator light flashes until the hybrid system is ready to drive.

If starting in a low temperature environment, the flashing time of the READY to drive indicator light becomes longer. It cannot move out from P range during flashing.

When the READY to drive indicator light illuminates, the vehicle can be driven, even if the gasoline engine is not running.

NOTE:

The gasoline engine starts and stops automatically. It may stop during deceleration or when the vehicle is stopped.

The gasoline engine may automatically run in the following conditions:

- The level of remaining charge in the Li-ion battery is low. The engine runs to charge the Li-ion battery and to provide power to drive the vehicle.
- The temperature of the engine coolant is low.
- When the A/C is used.
- When L (Low) position is engaged and Over Drive is off.
- When opening the door.
- When engine hood is opened.
- When applying the brakes.
- Based on driving conditions.
- The shift lever is shifted to the P (Park) position, the driver's seat belt is released and the driver's side door is then opened.

The hybrid system operates as follows based on driving conditions and the Li-ion battery charge.

The engine is hard to stop during these driving conditions:

- When the A/C is on and outside temperature is high/low.
- When repeatedly starting and stopping the engine.

STARTING AND SLOW SPEED DRIVING

In some cases, the vehicle can be driven by electric motor during extremely slow speed creep, but the engine starts when accelerating or releasing the brakes.

MEDIUM OR HIGH SPEED DRIVING

The system automatically controls the gasoline engine and electric motor in order to obtain the optimum fuel mileage and performance, depending on the driving situation and available Li-ion battery charge.

When the remaining battery level is low, the Li-ion battery is charged by the electric motor that is driven to generate electric power while the vehicle is driving.

RAPID ACCELERATION

The vehicle is accelerated using both the gasoline engine and the electric motor depending on the available Li-ion battery charge.

DECELERATION AND BRAKING

The Li-ion battery is charged by the electric motor that changes the energy of the rotating wheels into electric power. For additional information, refer to "Regenerative brake" in this section.

STOPPING

The gasoline engine may stop running to save fuel depending on the available Li-ion battery charge.

The NISSAN PUREDRIVE™ Hybrid System monitors the status of power being sent to the electric motor and the Li-ion battery state of charge. The status is shown on the assist charge gauge in the meter and the energy flow/remaining Li-ion battery charge in the vehicle information display. System status can also be shown on the navigation system display (if so equipped) and the meter when the screen is in the energy flow mode or energy/fuel history mode.

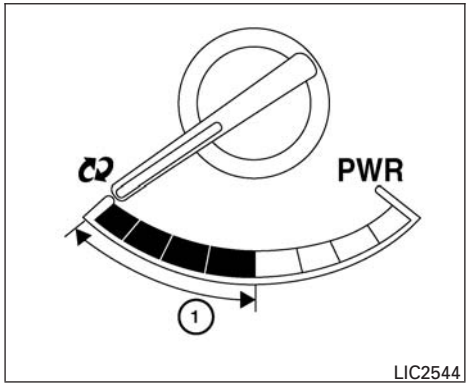

ASSIST CHARGE GAUGE

This meter displays the actual electric motor power consumption and the charging power to the Li-ion battery.

For additional information, refer to “Assist charge gauge” in the “Instruments and controls” section.

ENERGY FLOW (models with navigation system)

When you use this system, make sure the hybrid system is in the READY to drive mode. For additional information, refer to “Operation of the hybrid system” in this section.

If you use the system with the hybrid system off (ignition switch placed in the ACC position) for a long time, it will discharge the 12-volt battery power, and the hybrid system will not start.

Energy monitor for various operating modes can be displayed on the navigation system monitor and the meter.

Push the INFO button on the control panel, highlight the “Energy Flow” key on the display using the NISSAN controller, and push the ENTER button.

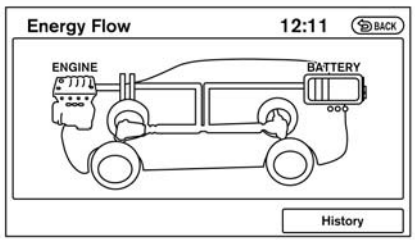

NJE0003

This is an example of the Energy Flow display. The Energy Flow display changes, depending on the following operating conditions. The graphic indicates the amount of power in the Li-ion battery.

The following are displayed on the Energy Flow screen:

- When the vehicle is powered only by the electric motor or gasoline engine.
- When the vehicle is powered by both the electric motor and the gasoline engine.
- When the vehicle is charging the Li-ion battery with the regenerative brake and gasoline engine.
- When the vehicle is powered by the gasoline engine and is charging the Li-ion battery.
- When there is no Energy Flow in the vehicle

The Energy Flow and remaining Li-ion battery charge can be also shown on the vehicle information display. For additional information, refer to “Trip computer” in the “Instruments and controls” section.

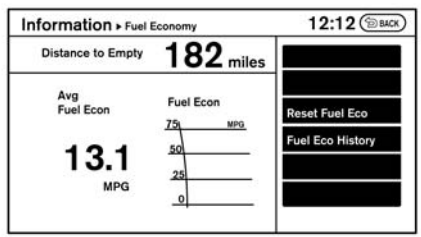

NJE0013

FUEL ECONOMY (models with navigation system)

Press the INFO button then touch the FUEL ECONOMY key on the display screen.

This screen displays the rate of fuel consumption and distance to empty.

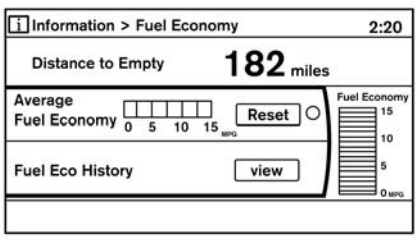

NJE0012

FUEL ECONOMY (models without navigation system)

Press the INFO button. Using the NISSAN controller, select FUEL ECONOMY menu option.

This screen displays the rate of fuel consumption and distance to empty.

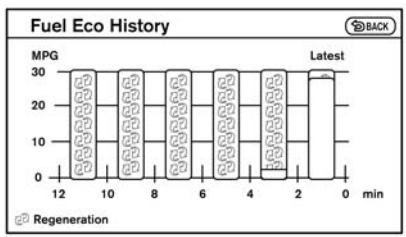

NJE0008

FUEL ECONOMY HISTORY (models with navigation system)

The Fuel Economy History screen appears in the display with the navigation system when the screen is in the Fuel Economy History mode.

1. Push the INFO button on the control panel and highlight the “Energy Flow” key on the display using the NISSAN controller. Then push the ENTER button.
2. Highlight the “History” key, and push the ENTER button.

The Fuel Economy History can be displayed on the navigation system monitor. This displays the vehicle’s average fuel consumption and regenerative electric power at 2 minute intervals.

The displayed values on the screen indicate general driving conditions. Accuracy varies with driving habits and road conditions.

1. Regenerated energy in the past 12 minutes: The regenerated energy in the past 12 minutes is indicated with symbols. One symbol indicates 30 watt-hour. The energy of 30 watt-hour illuminates a 30 watt bulb for an hour.
2. Fuel consumption in the past 12 minutes: Fuel consumption in the past 12 minutes is displayed.
3. Current fuel consumption (Latest column): The current fuel consumption is calculated and displayed based on distance and fuel consumption.

NOTE:

Information shown in the yellow column means current (within 2 minutes) and information shown in the blue columns means past (more than 2 minutes).

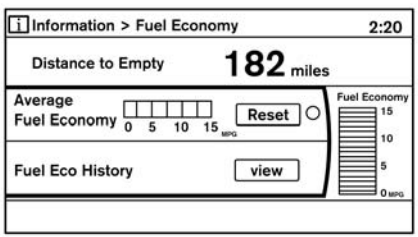

NJE0012

FUEL ECONOMY HISTORY (models without navigation system)

The Fuel Economy History screen appears when the display screen is in the Fuel Economy History mode.

1. Press the INFO button on the control panel.
2. Select the FUEL ECONOMY on the vehicle information display. This will display fuel economy information.

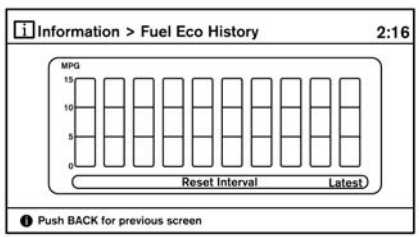

NJE0010

3. The Fuel Eco History can be displayed by touching the VIEW key on the display screen. This displays the vehicle's average fuel consumption and regenerative electric power at 2 minute intervals.

The displayed values on the screen indicate general driving conditions. Accuracy varies with driving habits and road conditions.

- Regenerated energy in the past 12 minutes: The regenerated energy in the past 12 minutes is indicated with symbols. One symbol indicates 30 watt-hour. The energy of 30 watt-hour illuminates a 30 watt bulb for an hour.
- Fuel consumption in the past 12 minutes: Fuel consumption in the past 12 minutes is displayed.
- Current fuel consumption (Latest column): The current fuel consumption is calculated and displayed based on distance and fuel consumption.

NOTE:

Information shown in the yellow column means current (within 2 minutes) and information shown in the blue columns means past (more than 2 minutes).

REGENERATIVE BRAKE

This vehicle is equipped with two braking systems.

- Hydraulic brake system
- Regenerative brake system

When the vehicle decelerates while the vehicle is driven with the shift lever in the D (drive) position, the Li-ion battery can be charged by the electric motor. The electric motor converts the energy of the rotating wheels into electric power under the following circumstances:

- When the accelerator pedal is released
- When the brake pedal is depressed
- When there is no malfunction in the brake system or the NISSAN PUREDRIVE™ Hybrid System

The regenerative brake may not work properly if the vehicle is installed with tires and road wheels other than the ones specified in this manual.

While the regenerative cooperative brake system is operating, you might feel slight vibration or hear the system working when braking. This is normal.

The regenerative cooperative brake system controls both hydraulic and regenerative brakes. If you feel unusual deceleration when braking, have a NISSAN dealer check both the brake and hybrid systems.

EFFICIENT USE OF YOUR VEHICLE

Drive your vehicle with smooth acceleration and deceleration.

- While driving, energy is recovered through the regenerative brake as the vehicle decelerates. However, for most efficient use, do not accelerate or decelerate your vehicle more than necessary.
- Avoid abrupt acceleration and deceleration.
- The power of the Li-ion battery can be checked on the Energy Flow in the center display (models with navigation system) or Li-ion battery status meter in the vehicle information display. For additional information, refer to “Energy Flow (models with navigation system)” or “Trip computer” in the “Instruments and controls” section of this manual. Gradual or non-abrupt acceleration and deceleration will make more effective use of the electric power.
- When parking, be sure to place the shift lever in the P (Park) position. While driving, place the shift lever in the D (Drive) position.

HYBRID VEHICLE PRECAUTIONS

HIGH-VOLTAGE COMPONENTS AND THEIR LOCATIONS

⚠ WARNING

- **The NISSAN PUREDRIVE™ Hybrid System uses high voltage up to approximately 144 volts. The system can be hot during and after starting. Be careful of both the high voltage and the high temperature. Obey the warning labels attached to the vehicle.**
- **Never touch, disassemble, remove or replace the high-voltage parts, harnesses and their connectors. High-voltage harnesses are orange. Touching, disassembling, removing or replacing those parts and harnesses can cause severe burns or electric shock that may result in serious injury or death.**

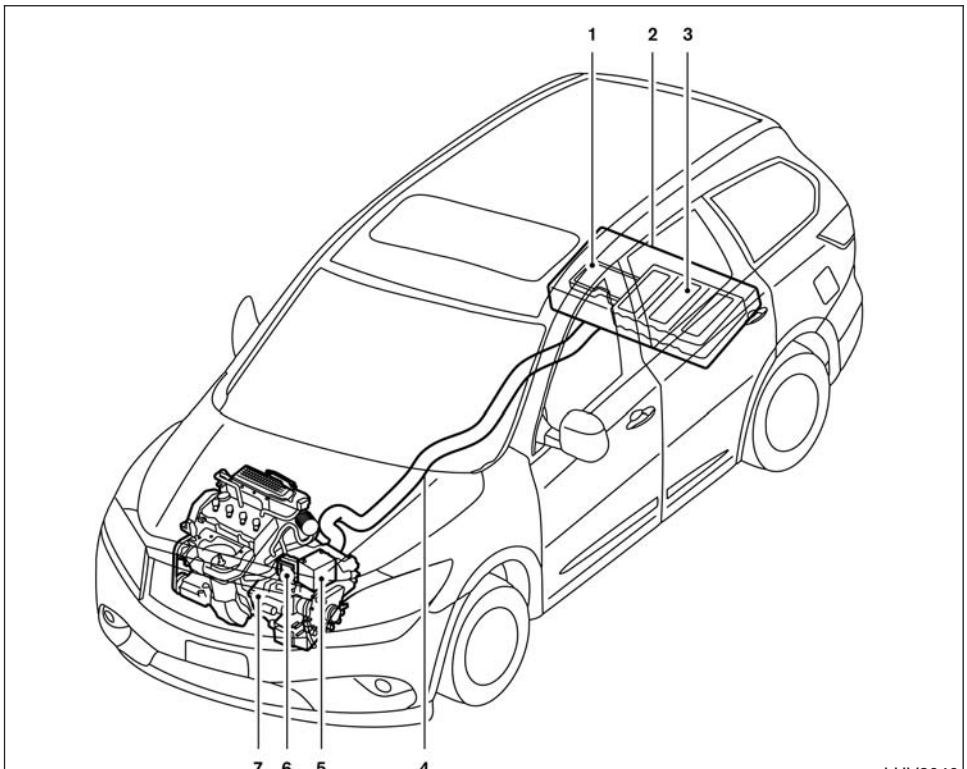

1. DC/DC Converter
2. Service Plug
3. Lithium-ion (Li-ion) Battery
4. High-Voltage Harness
5. 12–volt Battery
6. Traction Motor Inverter
7. Traction Motor

The hybrid system uses high voltage up to approximately 144 volts. High-voltage components are indicated in the illustration. High-voltage harnesses are orange. The system can be hot during and after starting. Be careful of both the high voltage and the high temperature.

HYBRID VEHICLE CHARACTERISTICS

⚠ WARNING

- **When you leave your vehicle, be sure to place the ignition switch in the OFF position.**
- **Be sure to put the transmission in the P (Park) position because the vehicle can move when the READY to drive indicator light is on even if the gasoline engine is not running. When the READY to drive indicator light is on, do not leave your vehicle in a shift position other than the P (Park) position. The vehicle will creep and start abruptly if the accelerator pedal is depressed by mistake. This may cause serious injury or death.**

⚠ CAUTION

If the vehicle is parked for a long period of time, the battery discharges gradually. To avoid this occurrence, drive the vehicle for approximately 30 minutes at least once every two to three months. Otherwise, the Li-ion battery may be damaged. If the Li-ion battery is completely discharged and the hybrid system cannot be activated, contact an NISSAN dealer.

High-voltage parts and harnesses on the hybrid vehicles emit approximately the same amount of electromagnetic waves as the conventional gasoline-powered vehicles or home electronic appliances despite their electromagnetic shieldings.

Charging the Li-ion battery while driving is important. The vehicle cannot run if the Li-ion battery is discharged. In the N (Neutral) position, the Li-ion battery does not recharge. Leaving the transmission in the N (Neutral) position for an extended period of time may discharge the Li-ion battery. The Li-ion battery recharges when the shift lever is in any position other than N (Neutral).

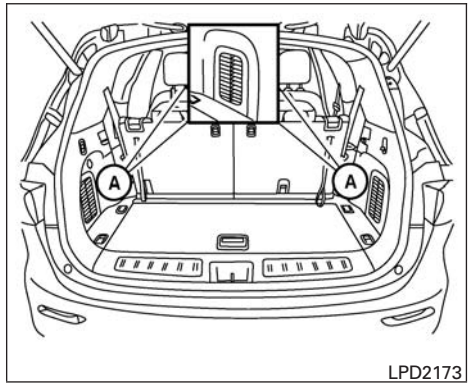

An air vent is located on the rear side trim panels Ⓐ to cool the high-voltage battery. If the vent is covered, the Li-ion battery will overheat resulting in reduced output performance of the hybrid system. For additional information, refer to “Lithium-ion (Li-ion) battery air vent” in the “Appearance and care” section of this manual.

You may hear the noise of the cooling fan from the air vent.

⚠ CAUTION

Do not place objects over or into the air vent. The Li-ion battery or DC/DC converter may overheat and be damaged.

⚠ CAUTION

Do not load large amounts of water in open containers (aquariums or buckets) into the vehicle. If the water spills onto the Li-ion battery, it may cause a short circuit and damage the battery.

⚠ CAUTION

It may cause a short circuit and damage the Li-ion battery or DC/DC converter.

Noise and vibration

After the hybrid system is activated, the following noises and vibrations that are unique to the hybrid system may occur. The following situations do not indicate a malfunction:

- Electric motor noise from the engine compartment
- Noise from the rear of the vehicle when the hybrid system activates or deactivates
- Noise and vibration when the gasoline engine starts running or stops
- Operating noise or electric motor noise when releasing the accelerator pedal or depressing the brake pedal
- Engine noise due to rapid acceleration
- Fan noise from the air inlet located on the rear parcel shelf
- Noise from the climate control system

MEMO

0 Illustrated table of contents

Air bags, seat belts and child restraints 0-2
Exterior front 0-3
Exterior rear. 0-4
Passenger compartment 0-5
Instrument panel. 0-6
Engine Compartment Check Locations 0-8
Warning/indicator lights 0-9

AIR BAGS, SEAT BELTS AND CHILD RESTRAINTS

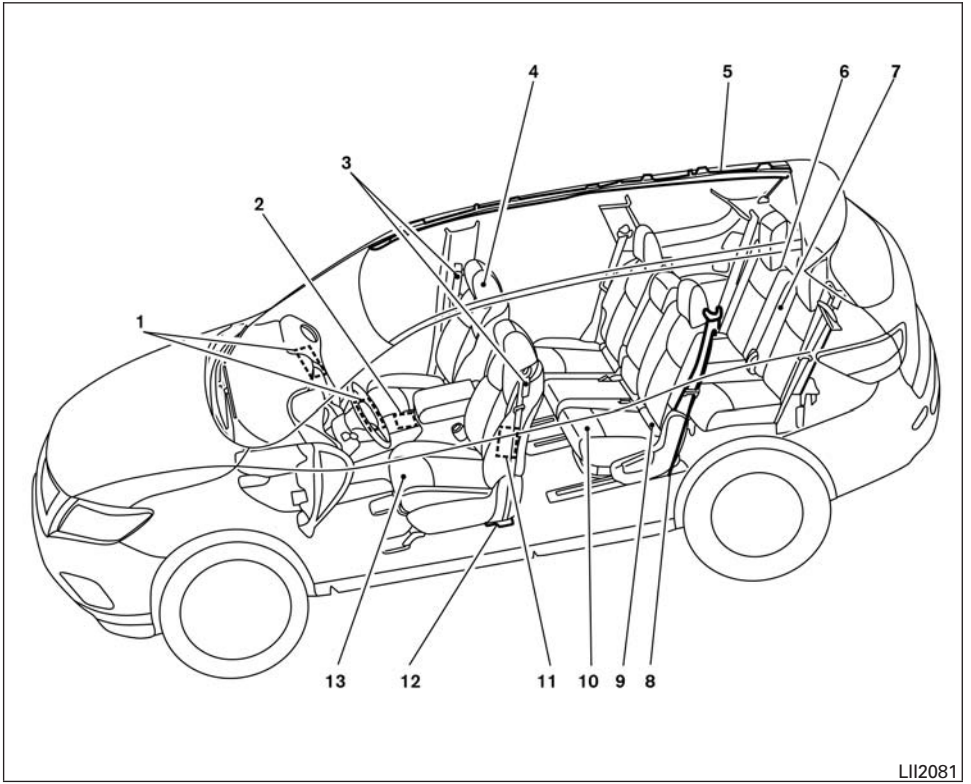

1. Supplemental front-impact air bags (P.1-47)
2. Occupant classification sensor (weight sensor) (P.1-65)
3. Seat belts (P. 1-16)
4. Head restraints/headrests (P.1-11)
5. Roof-mounted curtain side-impact and rollover supplemental air bag (P. 1-47)
6. 3rd row bench seat top tether strap anchor (located on bottom of seatback) (P. 1-43)
7. Folding 3rd row bench (P. 1-8)
8. 2nd row seat top tether strap anchor (located on bottom of seatback) (P. 1-42)
9. LATCH (Lower Anchors and Tethers for CHildren) (P. 1-27)
10. Folding 2nd row bench (P. 1-10)
11. Front seat-mounted side-impact supplemental air bag (P. 1-47)
12. Seat belt with pretensioner (P. 1-16)
13. Front seats (P. 1-2)

See the page number indicated in parentheses for operating details.

EXTERIOR FRONT

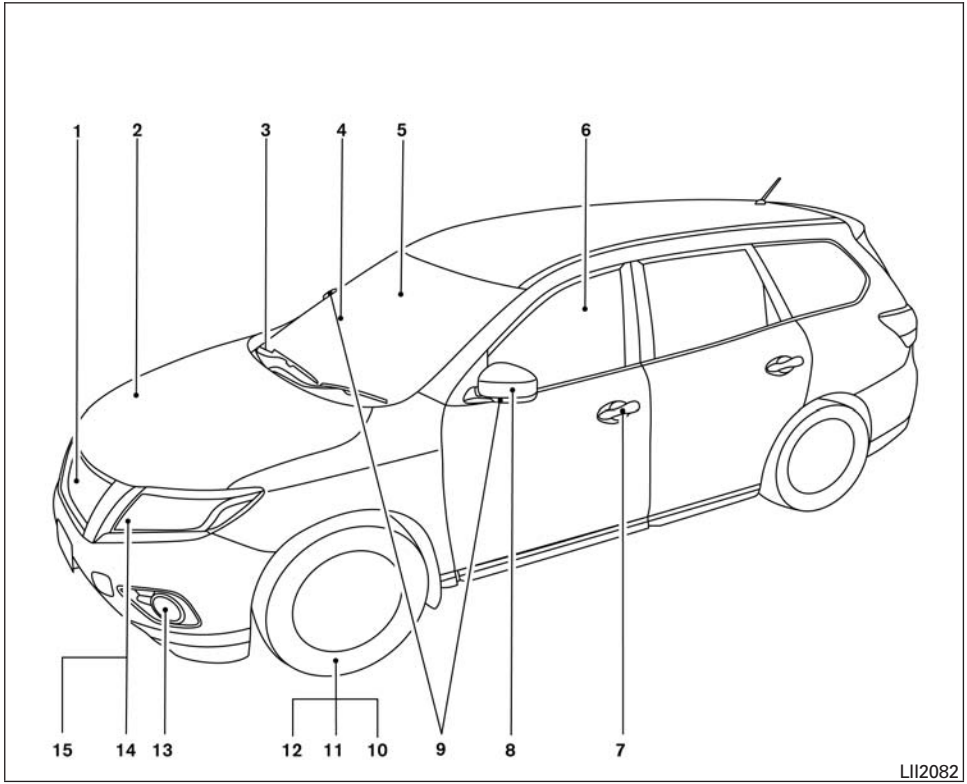

1. Front view camera (if so equipped) (P. 4-28)
2. Engine hood (P. 3-22)
3. Windshield wiper and washer switch, wiper blades (P. 2-33, 8-20)
4. Windshield (P. 8-20)
5. Compass display (if so equipped) (P. 2-6)
6. Power windows (P. 2-55)
7. Door locks, NISSAN Intelligent Key®, remote engine start (if so equipped), keys (P. 3-5, 3-2, 3-2)
8. Mirrors (P. 3-33)
9. Side view camera (if so equipped) (P. 4-28)
10. Tire pressure monitoring system (P. 8-30)
11. Flat tire (P. 6-3)
12. Tire chains (P. 8-37)
13. Fog light switch (P. 2-36)
14. Replacing bulbs (P. 8-26)
15. Headlight and turn signal switch (P. 2-36)

See the page number indicated in parentheses for operating details.

EXTERIOR REAR

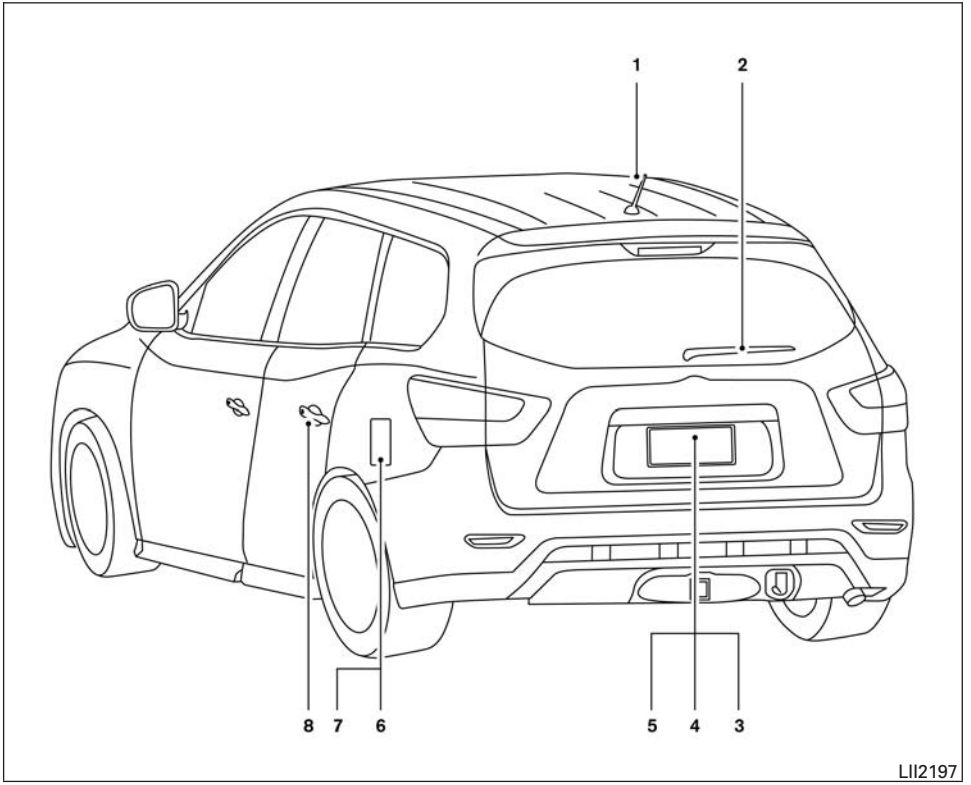

1. Antenna (P. 4-95)
2. Rear window wiper and washer switch (P. 2-35)
3. Liftgate release (power - P. 3-23, manual - P. 3-23)
4. Rearview camera (P.4-21)
5. Replacing bulbs (P. 8-26)
6. Fuel-filler cap, fuel recommendation (P. 3-28, P. 10-8)
7. Fuel-filler door (P. 3-28)
8. Child safety rear door lock (P. 3-7)

See the page number indicated in parentheses for operating details.

PASSENGER COMPARTMENT

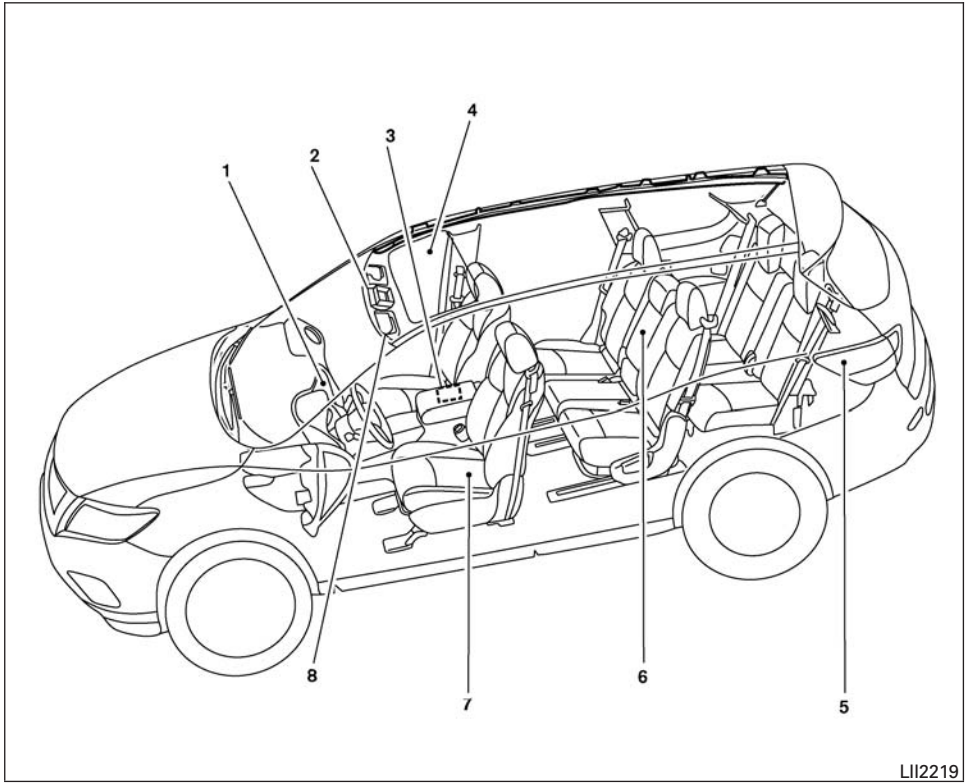

1. Glove box (P. 2-49)
2. Map lights (P. 2-62)
3. Storage (P. 2-48)
4. Power moonroof (if so equipped)/ panoramic sunshade (if so equipped) (P. 2-57, 2-59)
5. Luggage hooks (P. 2-48)
6. Cup holders (P. 2-51)
7. Seats (P. 1-2, 1-6, 1-8)
8. Sun visors (P. 3-32)

See the page number indicated in parentheses for operating details.

INSTRUMENT PANEL

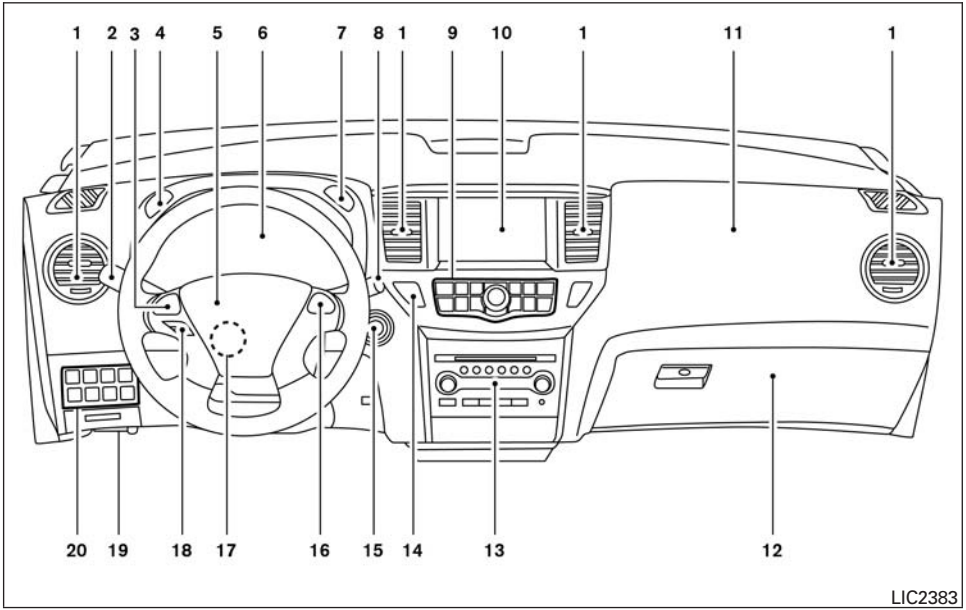

1. Vent (P. 4-41)
2. Headlight/fog light/turn signal switch (P. 2-36)
3. Control panel and Vehicle Information Display switches (P.2-19)
4. Instrument brightness control (P. 2-39)
5. Driver supplemental air bag/Horn (P.1-47, P. 2-41)
6. Meters, gauges, warning/indicator lights and Vehicle Information Display (P. 2-3, 2-9, 2-19)
7. Twin trip odometer reset switch (P. 2-4)
8. Windshield wiper/washer switch and rear window wiper/washer switch (P. 2-33, P. 2-35)
9. Control panel with Navigation System/ Control panel without Navigation System (P. 4-10, 4-4)
10. Display screen (P. 4-10)
11. Front passenger supplemental air bag (P. 1-47)
12. Glove box (P. 2-49)
13. Audio system controls (P. 4-47)/ Automatic heater and air conditioning controls (P. 4-42)
14. Hazard warning flasher switch (P. 6-2)
15. Push-button ignition switch (P. 5-10)
16. Cruise control main/set switches (P. 5-31)
17. Tilt steering wheel control (P. 3-31)
18. Bluetooth® Hands-free Phone System (P. 4-109, 4-124)
19. Hood release (P. 3-22)

20. Vehicle Dynamic Control (VDC) OFF switch (P. 2-45)
    Tow mode switch (P. 2-46)
    Liftgate release switch (if so equipped) (P. 3-23)
    Heated steering wheel switch (if so equipped) (P. 2-44)
    Power inverter switch (if so equipped) (P. 2-45)
    Power liftgate main switch (if so equipped) (P. 3-23)
    Blind Spot Warning (if so equipped)/ Rear Cross Traffic Alert (if so equipped) switch (P. 5-19, 5-25)

*: Refer to the separate Navigation System Owner's Manual (if so equipped).

For additional information, refer to the page number indicated in parentheses for operating details.

ENGINE COMPARTMENT CHECK LOCATIONS

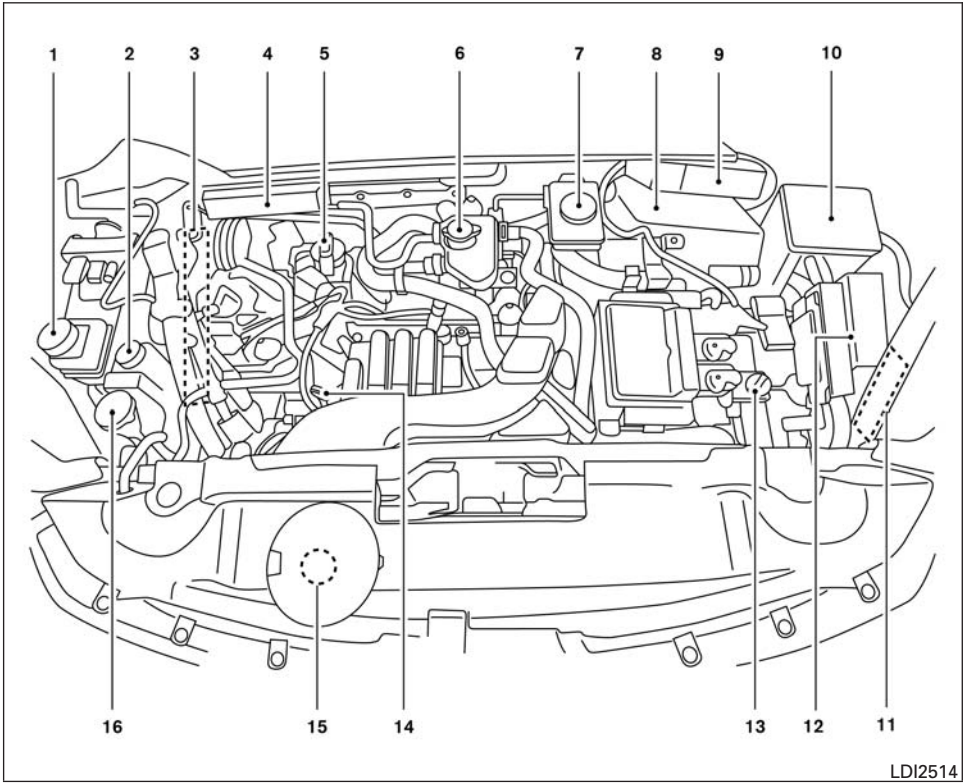

QR25DER engine

1. Power steering fluid reservoir (P. 8-14)
2. Engine coolant reservoir (P. 8-7)
3. Drive belt location (P. 8-17)
4. Fuse box (P. 8-22)
5. Engine oil filler cap (P. 8-10)
6. Inverter coolant reservoir (P. 8-9)
7. Brake fluid reservoir (P. 8-14)
8. Air cleaner (P. 8-19)
9. Fusible link box and remote positive battery terminal (P. 8-22)
10. Fuse box (P. 8-22)
11. Fuse box/fusible links (P. 8-22)
12. Fuse box/fusible links (P. 8-22)
13. 12–volt battery (P. 8-16)
14. Engine oil dipstick (P. 8-10)
15. Radiator cap (P. 8-7)
16. Windshield-washer fluid reservoir (P. 8-15)

See the page number indicated in parentheses for operating details.

NOTE:

Hybrid system engine compartment cover(s) removed for clarity.

WARNING/INDICATOR LIGHTS

Warning light	Name	Page
ABS	Anti-lock Braking System (ABS) warning light	2-10
BRAKE or	Brake warning light	2-10
	12–volt battery charge warning light	2-11
	Electronically controlled brake warning light (yellow)	2-11
	Engine oil pressure warning light	2-12
	High temperature warning light	2-12
	Pure Drive Hybrid™ system warning light	2-12

Warning light	Name	Page
	Low tire pressure warning light	2-12
	Low windshield-washer fluid warning light	2-14
	Master warning light	2-14
PS	Power steering warning light	2-14
	Seat belt warning light and chime	2-14
	Supplemental air bag warning light	2-15

Indicator light	Name	Page
EV	EV indicator light	2-15
	Front fog light indicator light	2-15
OFF	Front passenger air bag status light	2-15
	High beam indicator light (blue)	2-15
	Hill descent control system on indicator light (if so equipped)	2-15
	Low temperature indicator light	2-16
	Malfunction Indicator Light (MIL)	2-16
O/D OFF	Overdrive off indicator light	2-17

Indicator light	Name	Page
	READY to drive indicator light	2-17
	Security indicator light	2-17
	Side light and headlight indicator light (green)	2-17
	Slip indicator light	2-17
TOW	Tow mode ON indicator light	2-17
	Turn signal/hazard indicator lights	2-17
OFF	Vehicle Dynamic Control (VDC) off indicator light	2-17

MEMO

1 Safety—Seats, seat belts and supplemental restraint system

Seats 1-2
Front manual seat adjustment (if so equipped for passenger's seat) 1-2
Front power seat adjustment (if so equipped) 1-4
2nd row bench seat adjustment 1-6
3rd row bench seat adjustment 1-8
Armrests 1-9
Flexible seating 1-9
Head restraints/Headrests 1-11
Adjustable head restraint/headrest components 1-12
Non-adjustable head restraint/headrest components 1-12
Remove 1-13
Removable (without Dual head restraint/headrest DVD system only) 1-13
Install 1-14
Adjust 1-14
Folding head restraint/headrest 1-15
Seat belts 1-16
Precautions on seat belt usage 1-16
Seat belt warning light 1-19
Pregnant women 1-19
Injured persons 1-19
Three-point type seat belt with retractor 1-19
Seat belt extenders 1-22
Seat belt maintenance 1-23
Child safety 1-23
Infants 1-24
Small children 1-24
Larger children 1-24
Child restraints 1-25
Precautions on child restraints 1-25
LATCH (Lower Anchors and Tethers for CHildren) System 1-27
Rear-facing child restraint installation using LATCH 1-30
Rear-facing child restraint installation using the seat belts 1-32
Forward-facing child restraint installation using LATCH 1-35
Installing top tether strap 1-38
2nd row bench seat 1-38
Forward-facing child restraint installation using the seat belts 1-39
Installing top tether strap 1-42
2nd row bench seat 1-43

Installing top tether strap
(3rd row bench seat). 1-43
Booster seats 1-44
Supplemental restraint system (SRS) 1-47
Precautions on SRS 1-47
Supplemental air bag warning labels. 1-64
Supplemental air bag warning light 1-65

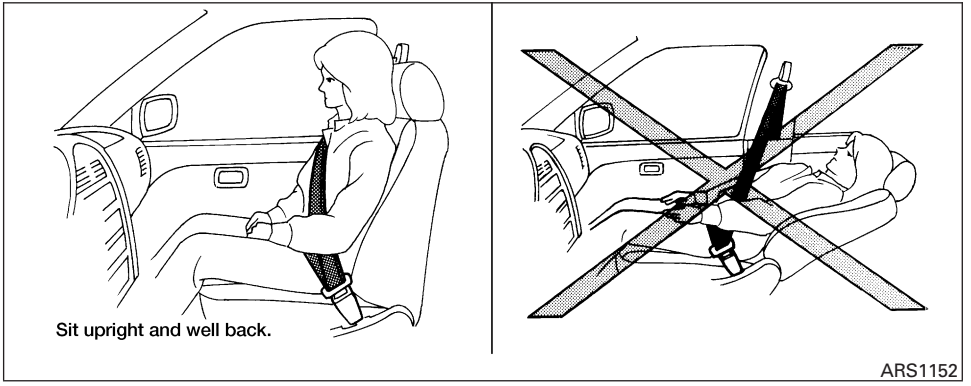

⚠ WARNING

- **Do not ride in a moving vehicle when the seatback is reclined. This can be dangerous. The shoulder belt will not be against your body. In an accident, you could be thrown into it and receive neck or other serious injuries. You could also slide under the lap belt and receive serious internal injuries.**
- **For the most effective protection when the vehicle is in motion, the seat should be upright. Always sit well back in the seat with both feet on the floor and adjust the seat properly. For additional information, refer to "Precautions on seat belt usage" in this section.**
- **After adjustment, gently rock in the seat to make sure it is securely locked.**
- **Do not leave children unattended inside the vehicle. They could unknowingly activate switches or controls. Unattended children could become involved in serious accidents.**
- **Do not adjust the driver's seat while driving so full attention may be given to vehicle operation. The seat may move suddenly and could cause loss of control of the vehicle.**
- **The seatback should not be reclined any more than needed for comfort. Seat belts are most effective when the passenger sits well back and straight up in the seat. If the seatback is reclined, the risk of sliding under the lap belt and being injured is increased.**

⚠ CAUTION

When adjusting the seat positions, be sure not to contact any moving parts to avoid possible injuries and/or damage.

FRONT MANUAL SEAT ADJUSTMENT (if so equipped for passenger's seat)

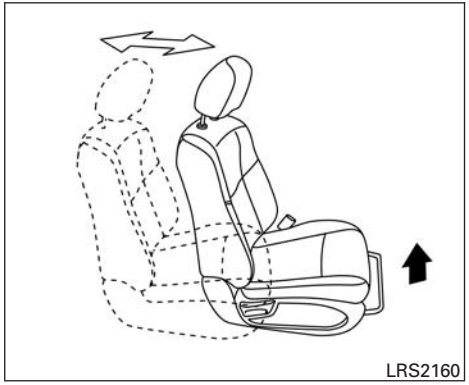

Forward and backward

Pull the center of the bar up and hold it while you slide the seat forward or backward to the desired position. Release the bar to lock the seat in position.

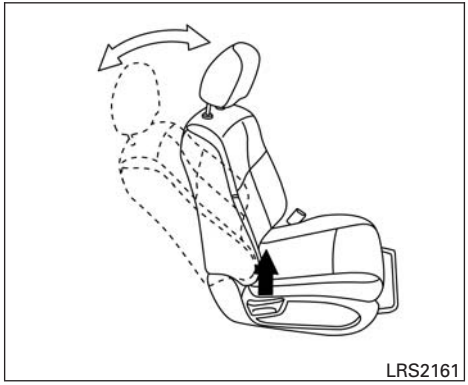

Reclining

To recline the seatback, pull the lever up and lean back. To bring the seatback forward, pull the lever up and lean your body forward. Release the lever to lock the seatback in position.

The reclining feature allows adjustment of the seatback for occupants of different sizes for added comfort and to help obtain proper seat belt fit. For additional information, refer to “Precautions on seat belt usage” in this section. Also, the seatback can be reclined to allow occupants to rest when the vehicle is stopped and the shift lever is in the P (Park) position.

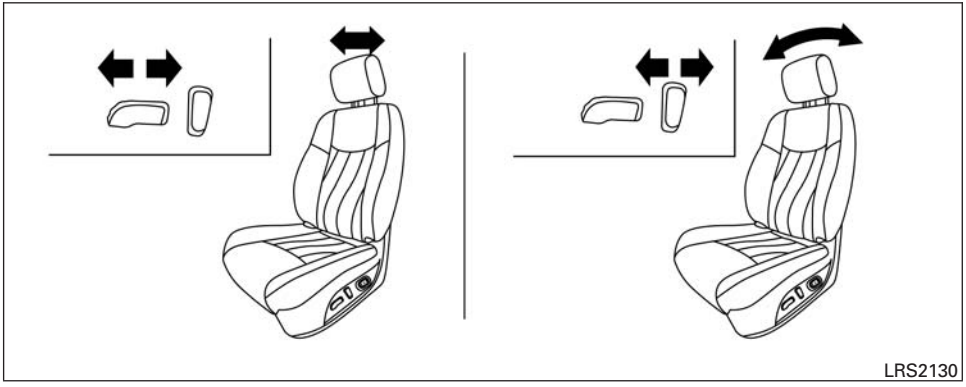

FRONT POWER SEAT ADJUSTMENT (if so equipped)

Operating tips

- The power seat motor has an auto-reset overload protection circuit. If the motor stops during operation, wait 30 seconds, then reactivate the switch.
- Do not operate the power seat switch for a long period of time when the Hybrid System is not in the READY mode. This will discharge the vehicle battery.

For additional information, refer to “Automatic drive positioner” in “Pre-driving checks and adjustments” for automatic drive positioner operation.

Forward and backward

Moving the switch forward or backward will slide the seat forward or backward to the desired position.

Reclining

Move the recline switch backward until the desired angle is obtained. To bring the seatback forward again, move the switch forward and move your body forward. The seatback will move forward.

The reclining feature allows adjustment of the seatback for occupants of different sizes for added comfort and to help obtain proper seat belt fit. For additional information, refer to “Precautions on seat belt usage” in this section. Also, the seatback can be reclined to allow occupants to rest when the vehicle is stopped and the shift lever is in P (Park).

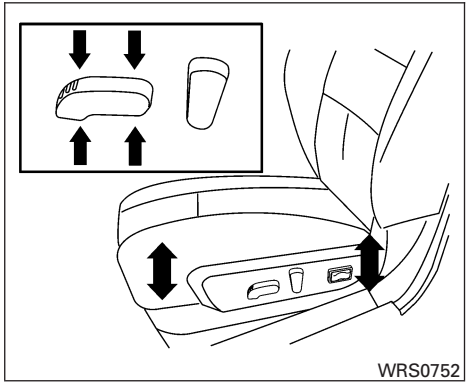

Seat lifter (driver's seat)

Push the front or rear end of the switch up or down to adjust the angle and height of the seat cushion.

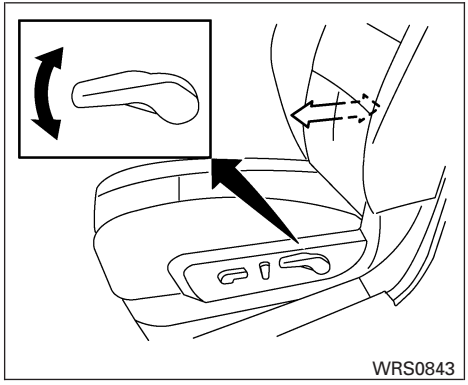

Manual (if so equipped)

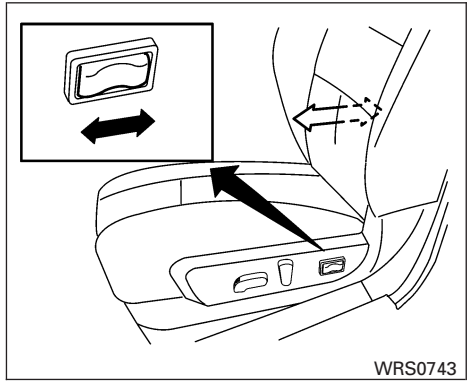

Power (if so equipped)

Lumbar support (driver's seat)

The lumbar support feature provides adjustable lower back support to the driver. Move the lever up or down (manual) or push the front or back end of the switch (power) to adjust the seat lumbar area.

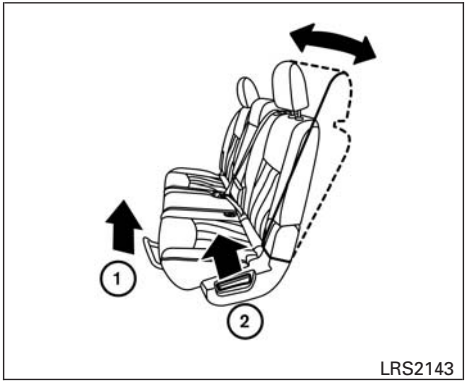

Outboard seats

2ND ROW BENCH SEAT ADJUSTMENT

Forward and backward

Pull the center of the bar ① up and hold it while you slide the seat forward or backward to the desired position. Release the bar to lock the seat in position.

Reclining

To recline the seatback, pull up on the lever ② and lean back. To bring the seatback forward, pull the lever ② up and lean your body forward. Release the lever to lock the seatback in position.

The recline feature allows adjustment of the seatback for occupants of different sizes for added comfort and to help obtain proper seat belt fit. For additional information, refer to "Precautions on seat belt usage" in this section. Also, the seatback can be reclined to allow occupants to rest when the vehicle is stopped and the shift lever is in P (Park).

⚠ WARNING

- **After adjustment, gently rock in the seat to make sure it is securely locked.**
- **Do not ride in a moving vehicle when the seatback is reclined. This can be dangerous. The shoulder belt will not be against your body. In an accident, you could be thrown into it and receive neck or other serious injuries. You could also slide under the lap belt and receive serious internal injuries.**
- **For the most effective protection when the vehicle is in motion, the seat should be upright. Always sit well back in the seat and adjust the seat belt properly. For additional information, refer to "Precautions on seat belt usage" in this section.**

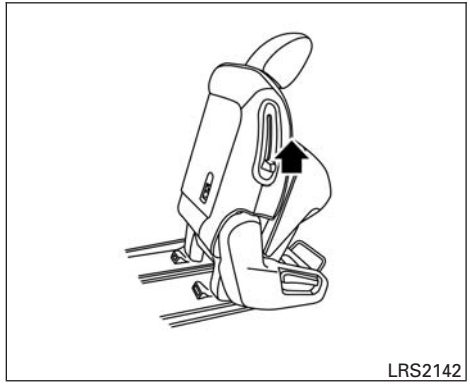

One touch walk-in function

The 3rd row can be accessed from outside the vehicle by using the seatback release lever located on the upper outboard side of the seatback on the 2nd row bench seat. If a child safety seat is installed on the passenger's side of the 2nd row seat, the 3rd row can be accessed without removing the child safety seat.

Multi-mode

⚠ WARNING

When returning the seat to its original position, confirm that the seat and seatback are locked properly.

⚠ CAUTION

- **Be careful not to pinch your hand or foot or bump your head when operating the walk-in seat.**
- **Do not drive with the 2nd row seat tipped up.**
- **Be careful not to allow the 2nd row seat to pinch, hit any part of your body or other people when operating the 2nd row seat. Make sure the seat path is clear of all objects before moving the seat.**

To enter the 3rd row from outside the vehicle, lift up on the seatback lever located on the upper outboard side of the seatback on the 2nd row bench seat. This will release the back of the seat and fold up the seat cushion. This will also release the seat tracks so you will be able to slide the seat forward or backward.

Slide the entire seat forward for access to the 3rd row.

To return the seat to a locked position, push the upper seatback rearward until the seatback and tracks are locked. Push the seat cushion down.

Child seat access mode

The passenger's side of the 2nd row seat can be slid forward for easy entry or exit from the 3rd row bench seat without a child safety seat being removed.

To enter the 3rd row from outside the vehicle, lift up on the seatback lever located on the upper outboard side of the seatback on the 2nd row bench seat. This will release the seatback. Then tilt the seat and release the tracks so you will be able to slide the seat forward or backward.

Slide the entire seat forward for access to the rear seats.

To return the seat to a locked position, push the upper seatback rearward until the seatback and track are locked.

⚠ WARNING

- **Do not leave a child in the child safety seat when operating the child seat access mode.**
- **When returning the seat to its original position, confirm that the seat and seatback are locked properly.**

⚠ CAUTION

- **Be careful not to pinch your hand or foot or bump your head when operating the walk-in seat.**
- **Do not drive with the 2nd row seat tipped up.**
- **Be careful not to allow the 2nd row seat to pinch, hit any part of your body or other people when operating the 2nd row seat. Make sure the seat path is clear of all objects before moving the seat.**

Exiting the 3rd row

To exit the 3rd row from either seating position, lift the upper seatback release lever to the uppermost position. This will release the back of the seat, then fold the seat cushion up and release the tracks.

Slide the entire seat forward.

To return the seat to a locked position, push the upper seatback rearward until the seatback and track are locked.

⚠ WARNING

When returning the seat to its original position, confirm that the seat and seatback are locked properly.

⚠ CAUTION

Be careful not to pinch your hand or foot or bump your head when operating the walk-in seat.

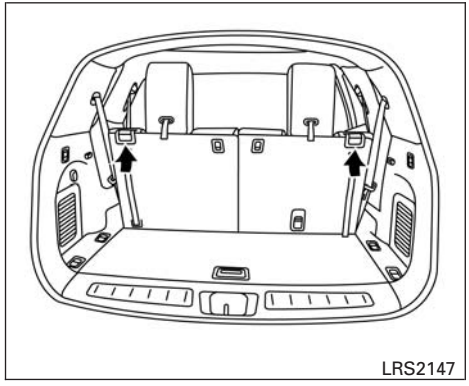

Outboard seats

3RD ROW BENCH SEAT ADJUSTMENT

Reclining

To recline the seatback, pull up on the latch located on the outside corner of each seatback. Lean back until the desired angle is obtained.

To bring the seatback forward again, pull up on the latch and pull the seatback upright until the desired angle is obtained.

The recline feature allows adjustment of the seatback for occupants of different sizes for added comfort and to help obtain proper seat belt fit. For additional information, refer to “Precautions on seat belt usage” in this section. Also, the seatback can be reclined to allow occupants to rest when the vehicle is stopped and the shift lever is in P (Park).

⚠ WARNING

- **After adjustment, gently rock in the seat to make sure it is securely locked.**
- **Do not ride in a moving vehicle when the seatback is reclined. This can be dangerous. The shoulder belt will not be against your body. In an accident, you could be thrown into it and receive neck or other serious injuries. You could also slide under the lap belt and receive serious internal injuries.**
- **For the most effective protection when the vehicle is in motion, the seat should be upright. Always sit well back in the seat and adjust the seat belt properly. For additional information, refer to “Precautions on seat belt usage” in this section.**

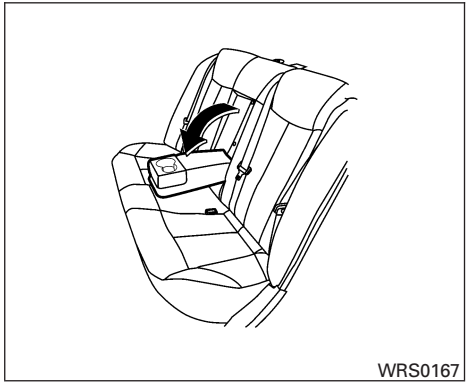

ARMRESTS

The 2nd row bench seat comes equipped with an armrest. Pull the armrest down until it rests on the seat cushion.

FLEXIBLE SEATING

⚠ WARNING

- **Never allow anyone to ride in the cargo area or on the rear seats when they are in the fold-down position. In a collision, people riding in these areas without proper restraints are more likely to be seriously injured or killed.**
- **Do not allow people to ride in any area of your vehicle that is not equipped with seats and seat belts. Be sure everyone in your vehicle is in a seat and using a seat belt properly.**
- **Do not fold down the rear seats when occupants are in the rear seat area or any luggage is on the rear seats.**
- **Head restraints/headrests should be adjusted properly as they may provide significant protection against injury in an accident. Always replace and adjust them properly if they have been removed for any reason.**
- **If the head restraints/headrests are removed for any reason, they should be securely stored to prevent them from causing injury to passengers or damage to the vehicle in case of sudden braking or an accident.**
- **When returning the seatbacks to the upright position, be certain they are completely secured in the latched position. If they are not completely secured, passengers may be injured in an accident or sudden stop.**
- **Properly secure all cargo to help prevent it from sliding or shifting. Do not place cargo higher than the seatbacks. In a sudden stop or collision, unsecured cargo could cause personal injury.**

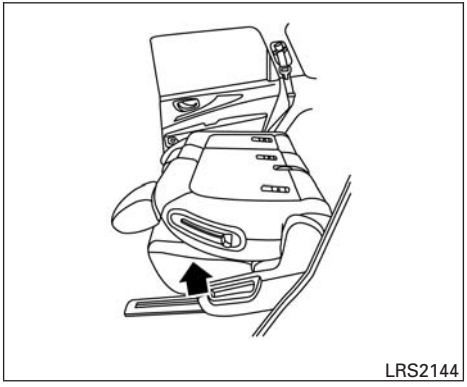

Folding the 2nd row bench seat

To fold the 2nd row bench seat flat for maximum cargo hauling:

1. Make sure that the head restraints/headrests are lowered. For maximum cargo hauling, remove the center head restraints/headrests. To remove the head restraints/headrests, push and hold the lock knob while moving the head restraints/headrests in an upward direction. Store the head restraints/headrests properly so it is not loose in the vehicle.
2. Stow the 2nd row seat belts in the seat belt hooks found on the sides of the vehicle.
3. Lift up on the recline lever on the side of the outboard seats to fold the seatbacks flat.
4. To return the 2nd row bench seats to a seating position, push up on the seatback until it latches in place.

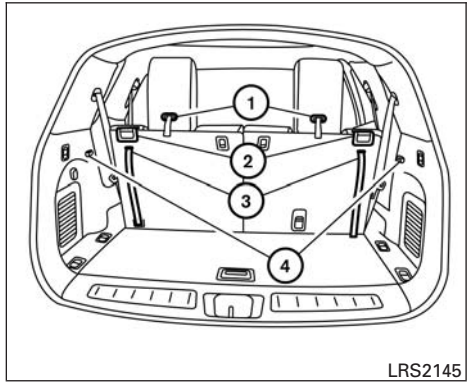

Folding the 3rd row bench seat

To fold the 3rd row seats flat for maximum cargo capacity:

1. Pull the strap ① to release the head restraint/headrest forward.
2. Stow the 3rd row seat belts in the seat belt hooks ④ found on the sides of the cargo area.
3. Pull up on the latch ② located in the upper corner of each seatback and lower the seatback forward over the seat base.

To return the 3rd row seats to a seating position:

1. Use the pull straps ③ to raise each seatback. Pull back until the seatback latches into position. **Make sure to properly raise each seatback to an upright and secured position.**
2. Do not use the pull strap to return the head restraint/headrest to the upright position. Pull back on the head restraint/headrest until it latches in the upright position.

⚠WARNING

When the seat is returned to the normal seating position, the head restraints/headrests must be returned to the upright position to properly protect vehicle occupants.

⚠WARNING

Head restraints/headrests supplement the other vehicle safety systems. They may provide additional protection against injury in certain rear end collisions. Adjustable head restraints/headrests must be adjusted properly, as specified in this section. Check the adjustment after someone else uses the seat. Do not attach anything to the head restraint/headrest stalks or remove the head restraint/headrest. Do not use the seat if the head restraint/headrest has been removed. If the head restraint/headrest was removed, reinstall and properly adjust the head restraint/headrest before an occupant uses the seating position. Failure to follow these instructions can reduce the effectiveness of the head restraints/headrests. This may increase the risk of serious injury or death in a collision.

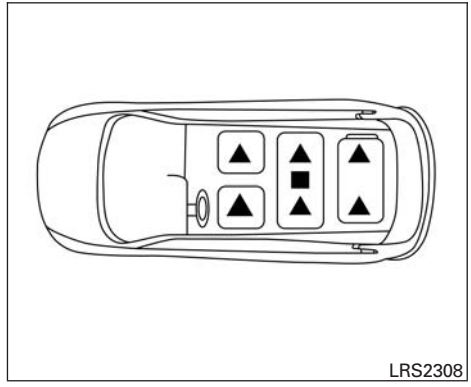

The illustration shows the seating positions equipped with head restraints/headrests.

▲ Indicates the seating position is equipped with a head restraint.

■ Indicates the seating position is equipped with a headrest.

+ Indicates the seating position is not equipped with a head restraint or headrest (if applicable).

- Your vehicle is equipped with a head restraint/headrest that may be integrated, adjustable or non-adjustable.

- Adjustable head restraints/headrests have multiple notches along the stalk(s) to lock them in a desired adjustment position.
- The non-adjustable head restraints/headrests have a single locking notch to secure them to the seat frame.
- Proper Adjustment:
  - For the adjustable type, align the head restraint/headrest so the center of your ear is approximately level with the center of the head restraint/headrest.
  - If your ear position is still higher than the recommended alignment, place the head restraint/headrest at the highest position.
- If the head restraint/headrest has been removed, ensure that it is reinstalled and locked in place before riding in that designated seating position.

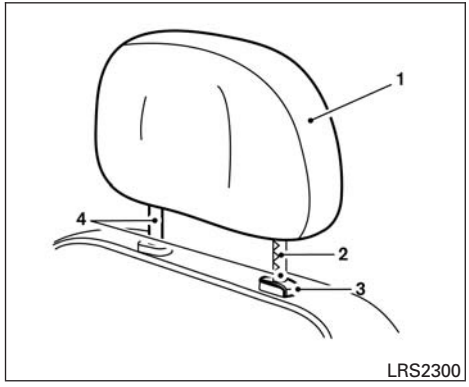

ADJUSTABLE HEAD RESTRAINT/ HEADREST COMPONENTS

1. Removable head restraint/headrest
2. Multiple notches
3. Lock knob
4. Stalks

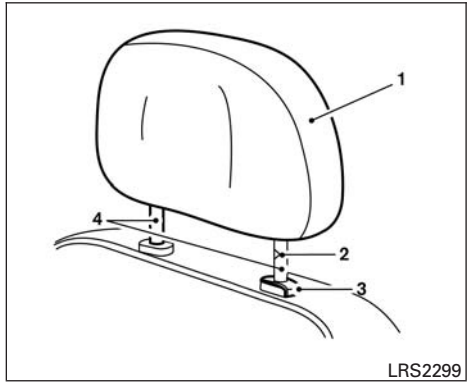

NON-ADJUSTABLE HEAD RESTRAINT/HEADREST COMPONENTS

1. Removable head restraint/headrest
2. Single notch
3. Lock knob
4. Stalks

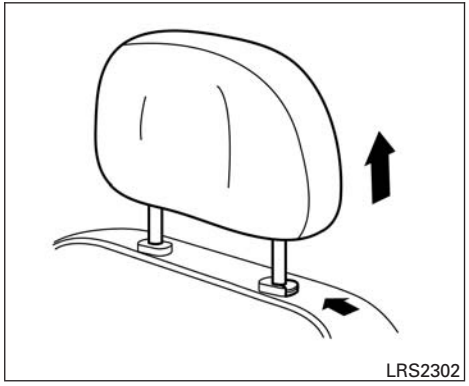

REMOVE

Use the following procedure to remove the head restraint/headrest:

1. Pull the head restraint/headrest up to the highest position.
2. Push and hold the lock knob.
3. Remove the head restraint/headrest from the seat.
4. Store the head restraint/headrest properly in a secure place so it is not loose in the vehicle.
5. Reinstall and properly adjust the head restraint/headrest before an occupant uses the seating position.

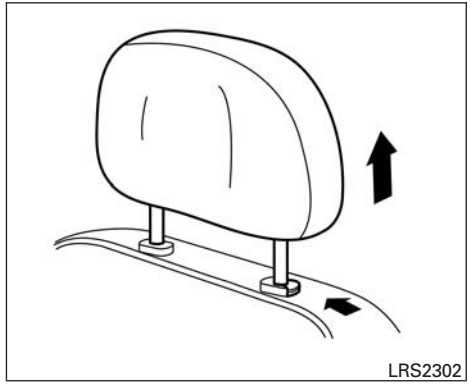

REMOVABLE (without Dual head restraint/headrest DVD system only)

⚠ CAUTION

Do not remove head restraint/headrest from vehicles equipped with Dual head restraint/headrest DVD system. Removal may damage the system wiring.

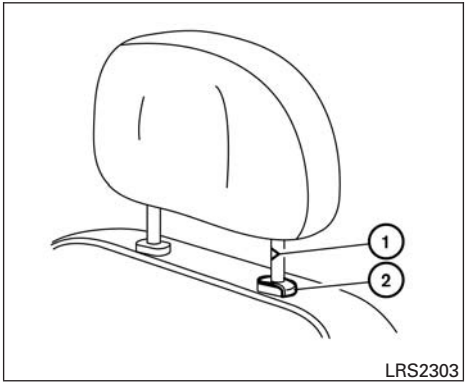

LRS2303

INSTALL

1. Align the head restraint/headrest stalks with the holes in the seat. Make sure that the head restraint/headrest is facing the correct direction. The stalk with the notch (notches) ① must be installed in the hole with the lock knob ②.
2. Push and hold the lock knob and push the head restraint/headrest down.
3. Properly adjust the head restraint/headrest before an occupant uses the seating position.

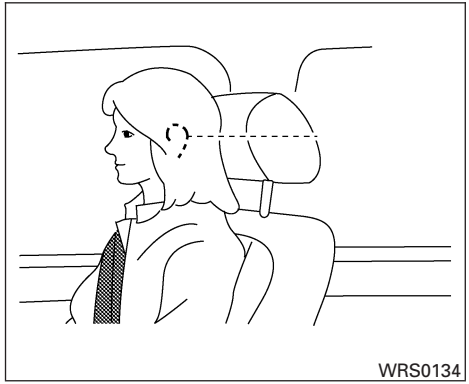
WRS0134

ADJUST

For adjustable head restraint/headrest

Adjust the head restraint/headrest so the center is level with the center of your ears. If your ear position is still higher than the recommended alignment, place the head restraint/headrest at the highest position.

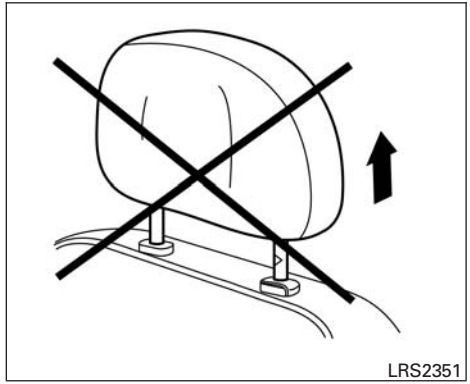
LRS2351

For non-adjustable head restraint/headrest

Make sure the head restraint/headrest is positioned so the lock knob is engaged in the notch before riding in that designated seating position.

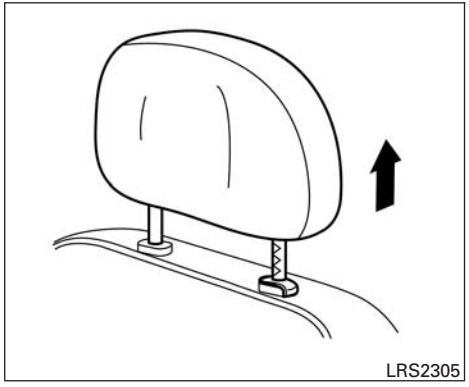

Raise

To raise the head restraint/headrest, pull it up.

Make sure the head restraint/headrest is positioned so the lock knob is engaged in the notch before riding in that designated seating position.

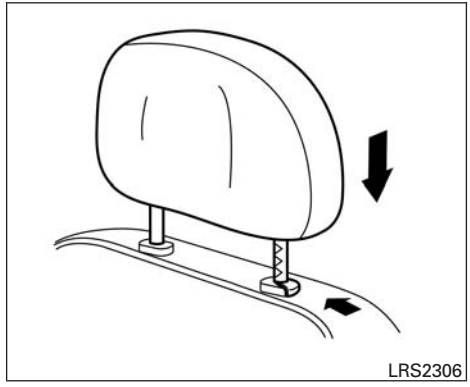

Lower

To lower, push and hold the lock knob and push the head restraint/headrest down.

Make sure the head restraint/headrest is positioned so the lock knob is engaged in the notch before riding in that designated seating position.

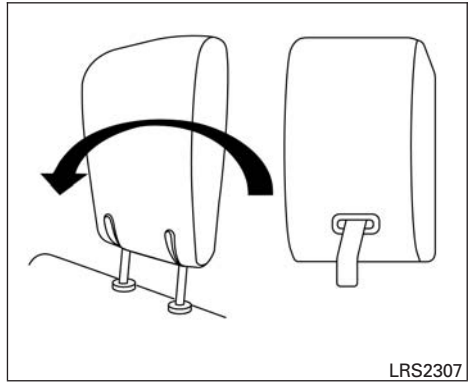

FOLDING HEAD RESTRAINT/ HEADREST

To fold the head restraint/headrest, pull the strap located on the rear of the head restraint/headrest.

If the head restraint/headrest has been folded, make sure that it is returned to the upright position.

Make sure the head restraint/headrest is positioned so the lock knob is engaged in the notch before riding in that designated seating position.

⚠ WARNING

When the seat is returned to the normal seating position, the head restraint/headrest must be returned to the upright position to properly protect vehicle occupants.

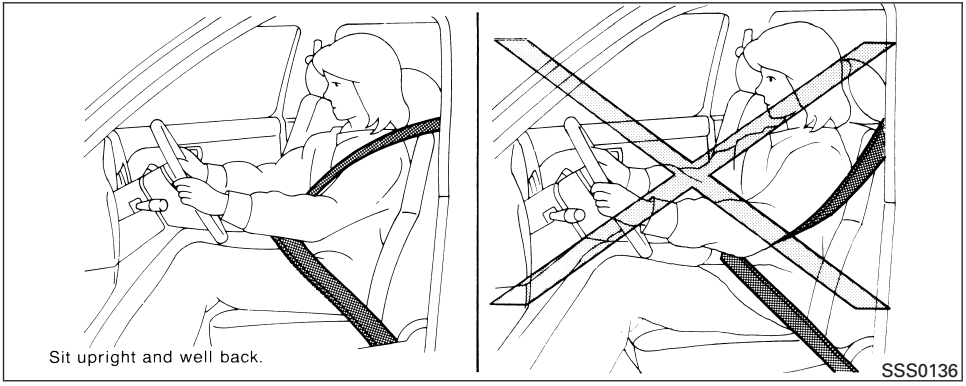

PRECAUTIONS ON SEAT BELT USAGE

If you are wearing your seat belt properly adjusted and you are sitting upright and well back in your seat with both feet on the floor, your chances of being injured or killed in a collision and/or the severity of injury may be greatly reduced. NISSAN strongly encourages you and all of your passengers to buckle up every time you drive, even if your seating position includes a supplemental air bag.

Most U.S. states and Canadian provinces or territories specify that seat belts be worn at all times when a vehicle is being driven.

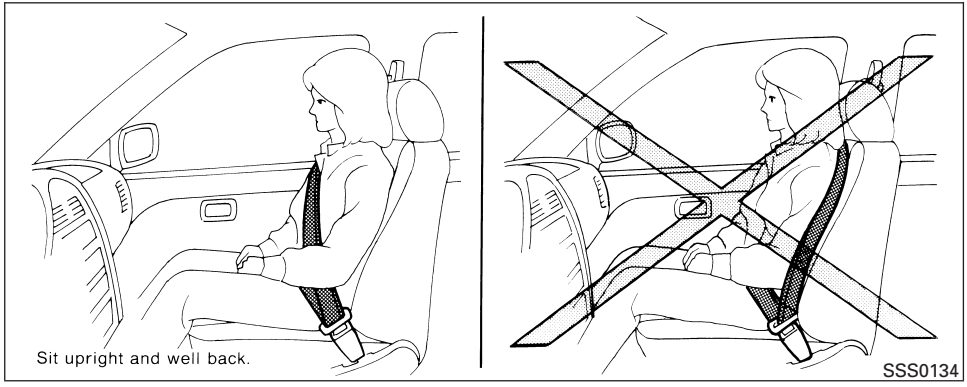

⚠ WARNING

- **Every person who drives or rides in this vehicle should use a seat belt at all times. Children should be properly restrained in the rear seat and, if appropriate, in a child restraint.**

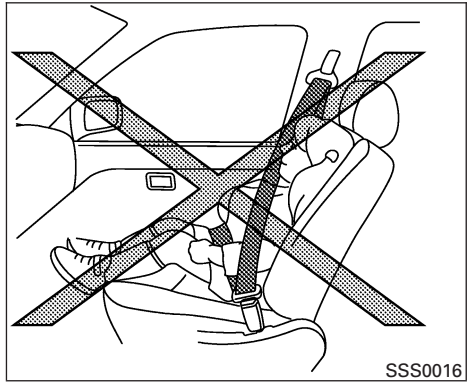

⚠ WARNING

- **The seat belt should be properly adjusted to a snug fit. Failure to do so may reduce the effectiveness of the entire restraint system and increase the chance or severity of injury in an accident. Serious injury or death can occur if the seat belt is not worn properly.**

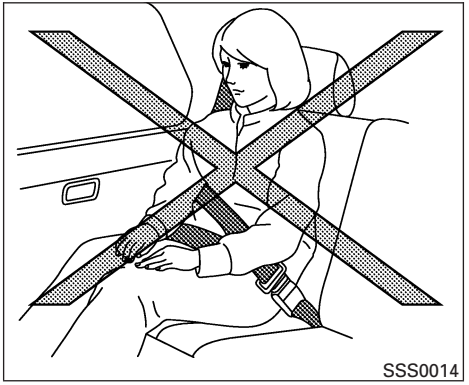

⚠ WARNING

- **Always route the shoulder belt over your shoulder and across your chest. Never put the belt behind your back, under your arm or across your neck. The belt should be away from your face and neck, but not falling off your shoulder.**
- **Position the lap belt as low and snug as possible AROUND THE HIPS, NOT THE WAIST. A lap belt worn too high could increase the risk of internal injuries in an accident.**
- **Be sure the seat belt tongue is securely fastened to the proper buckle.**
- **Do not wear the seat belt inside out or twisted. Doing so may reduce its effectiveness.**
- **Do not allow more than one person to use the same seat belt.**
- **Never carry more people in the vehicle than there are seat belts.**
- **If the seat belt warning light glows continuously while the ignition is turned ON with all doors closed and all seat belts fastened, it may indicate a malfunction in the system. Have the system checked by a NISSAN dealer.**
- **No changes should be made to the seat belt system. For example, do not modify the seat belt, add material, or install devices that may change the seat belt routing or tension. Doing so may affect the operation of the seat belt system. Modifying or tampering with the seat belt system may result in serious personal injury.**
- **Once a seat belt pretensioner has activated, it cannot be reused and must be replaced together with the retractor. See your NISSAN dealer.**
- **Removal and installation of pretensioner system components should be done by a NISSAN dealer.**
- **All seat belt assemblies, including retractors and attaching hardware, should be inspected after any collision by a NISSAN dealer. NISSAN recommends that all seat belt assemblies in use during a collision be replaced unless the collision was minor and the belts show no damage and continue to operate properly. Seat belt assemblies not in use during a collision should also be inspected and replaced if either damage or improper operation is noted.**
- **All child restraints and attaching hardware should be inspected after any collision. Always follow the restraint manufacturer's inspection instructions and replacement recommendations. The child restraints should be replaced if they are damaged.**

SEAT BELT WARNING LIGHT

Both the driver's and passenger's front seats are equipped with a seat belt warning light. The warning light, located on the instrument panel, will show the status of the driver and passenger seat belt.

NOTE:

The front passenger seat belt warning light will not light up if the seat is not occupied.

For additional information, refer to "Warning/indicator lights and audible reminders" in the "Instruments and controls" section of this manual.

PREGNANT WOMEN

NISSAN recommends that pregnant women use seat belts. The seat belt should be worn snug and always position the lap belt as low as possible around the hips, not the waist. Place the shoulder belt over your shoulder and across your chest. Never run the lap/shoulder belt over your abdominal area. Contact your doctor for specific recommendations.

INJURED PERSONS

NISSAN recommends that injured persons use seat belts. Check with your doctor for specific recommendations.

THREE-POINT TYPE SEAT BELT WITH RETRACTOR

⚠ WARNING

- **Every person who drives or rides in this vehicle should use a seat belt at all times.**
- **Do not ride in a moving vehicle when the seatback is reclined. This can be dangerous. The shoulder belt will not be against your body. In an accident, you could be thrown into it and receive neck or other serious injuries. You could also slide under the lap belt and receive serious internal injuries.**
- **For the most effective protection when the vehicle is in motion, the seat should be upright. Always sit well back in the seat with both feet on the floor and adjust the seat belt properly.**
- **Do not allow children to play with the seat belts. Most seating positions are equipped with Automatic Locking Retractor (ALR) mode seat belts. If the seat belt becomes wrapped around a child's neck with the ALR mode activated, the child can be seriously injured or killed if the seat belt retracts and becomes tight. This can occur even if the vehicle is parked. Unbuckle the seat belt to release the child. If the seat belt cannot be unbuckled or is already unbuckled, release the child by cutting the seat belt with a suitable tool (such as a knife or scissors) to release the seat belt.**

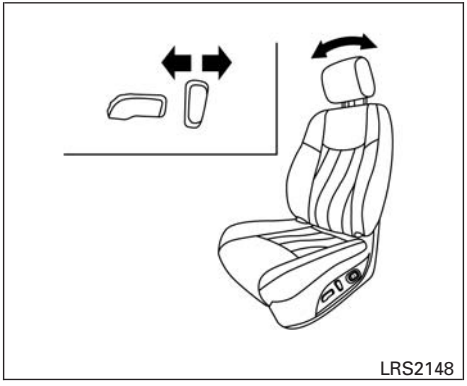

Front seat shown

Fastening the seat belts

1. Adjust the seat. For additional information, refer to “Seats” in this section.

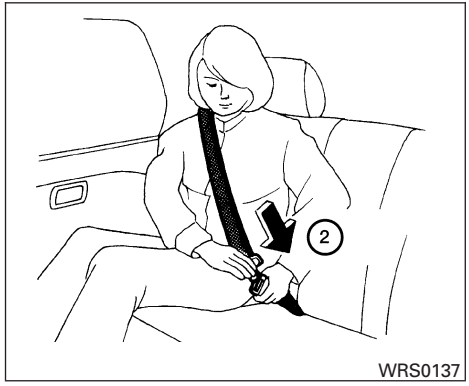

② Slowly pull the seat belt out of the retractor and insert the tongue into the buckle until you hear and feel the latch engage.

- **The retractor is designed to lock during a sudden stop or on impact. A slow pulling motion permits the seat belt to move and allows you some freedom of movement in the seat.**
- **If the seat belt cannot be pulled from its fully retracted position, firmly pull the belt and release it. Then smoothly pull the belt out of the retractor.**

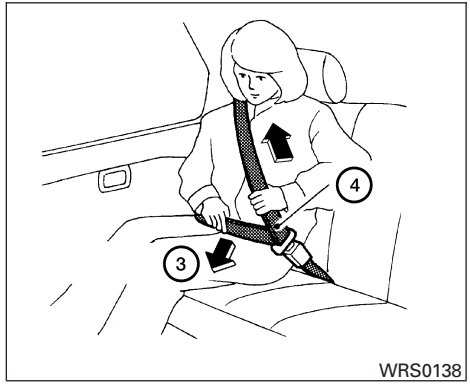

③ Position the lap belt portion **low and snug on the hips** as shown.

④ Pull the shoulder belt portion toward the retractor to take up extra slack. Be sure the shoulder belt is routed over your shoulder and across your chest.

The front passenger seat and the rear seating positions three-point seat belts have two modes of operation:

- Emergency Locking Retractor (ELR)
- Automatic Locking Retractor (ALR)

The ELR mode allows the seat belt to extend and retract to allow the driver and passengers some freedom of movement in the seat. The ELR locks the seat belt when the vehicle slows down rapidly or during certain impacts.

The ALR mode (child restraint mode) locks the seat belt for child restraint installation.

When the ALR mode is activated, the seat belt cannot be extended again until the seat belt tongue is detached from the buckle and fully retracted. The seat belt returns to the ELR mode after the seat belt fully retracts. For additional information, refer to “Child restraints” in this section.

The ALR mode should be used only for child restraint installation. During normal seat belt use by an occupant, the ALR mode should not be activated. If it is activated, it may cause uncomfortable seat belt tension.

⚠ WARNING

When fastening the seat belts, be certain that the seatbacks are completely secured in the latched position. If they are not completely secured, passengers may be injured in an accident or sudden stop.

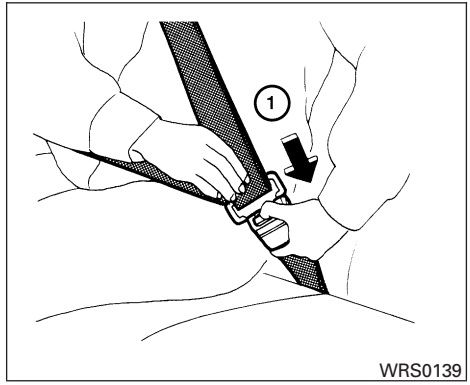

Unfastening the seat belts

① To unfasten the seat belt, press the button on the buckle. The seat belt automatically retracts.

Checking seat belt operation

Seat belt retractors are designed to lock seat belt movement by two separate methods:

- When the seat belt is pulled quickly from the retractor
- When the vehicle slows down rapidly

To increase your confidence in the seat belts, check the operation as follows:

- Grasp the shoulder belt and pull forward quickly. The retractor should lock and restrict further belt movement.

If the retractor does not lock during this check or if you have any questions about seat belt operation, see a NISSAN dealer.

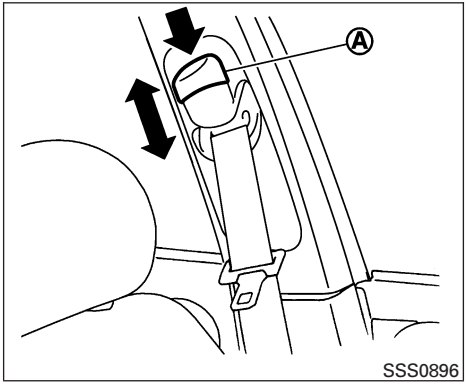

Ⓐ Shoulder belt height adjust button

Shoulder belt height adjustment (front and rear outboard seats)

The shoulder belt anchor height should be adjusted to the position best for you. For additional information, refer to “Precautions on seat belt usage” in this section.

To adjust, push the button and then move the shoulder belt anchor to the desired position, so the belt passes over the center of the shoulder. The belt should be away from your face and neck, but not falling off your shoulder. Release the adjustment button to lock the shoulder belt anchor into position.

⚠ WARNING

- **After adjustment, release the adjustment button and try to move the shoulder belt anchor up and down to make sure it is securely fixed in position.**
- **The shoulder belt anchor height should be adjusted to the position best for you. Failure to do so may reduce the effectiveness of the entire restraint system and increase the chance or severity of injury in an accident.**
- **The shoulder belt should rest on the middle of the shoulder. It must not rest against the neck.**
- **Be sure that the seat belt is not twisted in any way.**
- **Be sure that the shoulder belt anchor is secured by trying to move the shoulder belt anchor up and down after adjustment.**

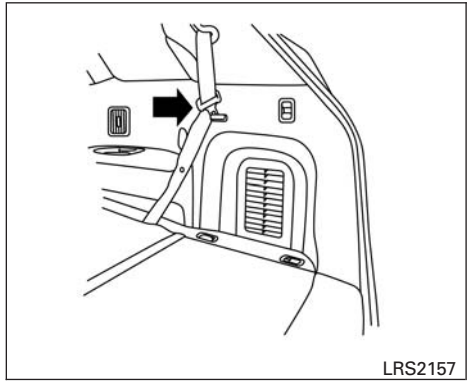

3rd row shown; 2nd row similar

Seat belt hook

When the seat belt is not in use and when folding down the rear seats, hook the rear seat belts on the seat belt hooks.

SEAT BELT EXTENDERS

If, because of body size or driving position, it is not possible to properly fit the lap/shoulder belt and fasten it, an extender that is compatible with the installed seat belts is available for purchase. The extender adds approximately 8 in (200 mm) of length and are available for the:

- Driver and front passenger seating position

- 2nd and 3rd row seating position

See a NISSAN dealer for assistance with purchasing an extender if an extender is required.

⚠WARNING

- **Only NISSAN seat belt extenders, made by the same company which made the original equipment seat belts, should be used with NISSAN seat belts.**
- **Adults and children who can use the standard seat belt should not use an extender. Such unnecessary use could result in serious personal injury in the event of an accident.**
- **Never use seat belt extenders to install child restraints. If the child restraint is not secured properly, the child could be seriously injured in a collision or a sudden stop.**

SEAT BELT MAINTENANCE

- **To clean the seat belt webbing,** apply a mild soap solution or any solution recommended for cleaning upholstery or carpet. Then wipe with a cloth and allow the seat belts to dry in the shade. Do not allow the seat belts to retract until they are completely dry.
- **If dirt builds up in the shoulder belt guide of the seat belt anchors,** the seat belts may retract slowly. Wipe the shoulder belt guide with a clean, dry cloth.
- **Periodically check to see that the seat belt and the metal components,** such as buckles, tongues, retractors, flexible wires and anchors, work properly. If loose parts, deterioration, cuts or other damage on the webbing is found, the entire seat belt assembly should be replaced.

⚠WARNING

Do not allow children to play with the seat belts. Most seating positions are equipped with Automatic Locking Retractor (ALR) mode seat belts. If the seat belt becomes wrapped around a child's neck with the ALR mode activated, the child can be seriously injured or killed if the seat belt retracts and becomes tight. This can occur even if the vehicle is parked. Unbuckle the seat belt to release the child. If the seat belt cannot be unbuckled or is already unbuckled, release the child by cutting the seat belt with a suitable tool (such as a knife or scissors) to release the seat belt.

Children need adults to help protect them. They need to be properly restrained.

In addition to the general information in this manual, child safety information is available from many other sources, including doctors, teachers, government traffic safety offices, and community organizations. Every child is different, so be sure to learn the best way to transport your child.

There are three basic types of child restraint systems:

- Rear-facing child restraint
- Forward-facing child restraint
- Booster seat

The proper restraint depends on the child's size. Generally, infants up to about 1 year and less than 20 lbs (9 kg) should be placed in rear-facing child restraints. Forward-facing child restraints are available for children who outgrow rear-facing child restraints and are at least 1 year old. Booster seats are used to help position a vehicle lap/shoulder belt on a child who can no longer use a forward-facing child restraint.

⚠ WARNING

Infants and children need special protection. The vehicle's seat belts may not fit them properly. The shoulder belt may come too close to the face or neck. The lap belt may not fit over their small hip bones. In an accident, an improperly fitting seat belt could cause serious or fatal injury. Always use appropriate child restraints.

All U.S. states and Canadian provinces or territories require the use of approved child restraints for infants and small children. For additional information, refer to "Child restraints" in this section.

A child restraint may be secured in the vehicle by using either the LATCH (Lower Anchors and Tethers for CHildren) system or with the vehicle seat belt. For additional information, refer to "Child restraints" in this section.

NISSAN recommends that all pre-teens and children be restrained in the rear seat. Studies show that children are safer when properly restrained in the rear seat than in the front seat.

This is especially important because your vehicle has a supplemental restraint system (air bag system) for the front passenger. For additional information, refer to "Supplemental restraint system (SRS)" in this section.

INFANTS

Infants up to at least 1 year old should be placed in a rear-facing child restraint. NISSAN recommends that infants be placed in child restraints that comply with Federal Motor Vehicle Safety Standards or Canadian Motor Vehicle Safety Standards. You should choose a child restraint that fits your vehicle and always follow the manufacturer's instructions for installation and use.

SMALL CHILDREN

Children that are over 1 year old and weigh at least 20 lbs (9 kg) should remain in a rear-facing child restraint as long as possible up to the height or weight limit of the child restraint. Children who outgrow the height or weight limit of the rear-facing child restraint and are at least 1 year old should be secured in a forward-facing child restraint with a harness. Refer to the manufacturer's instructions for minimum and maximum weight and height recommendations. NISSAN recommends that small children be placed in child restraints that comply with Federal Motor Vehicle Safety Standards or Canadian Motor Vehicle Safety Standards. You should choose a child restraint that fits your vehicle and always follow the manufacturer's instructions for installation and use.

LARGER CHILDREN

Children should remain in a forward-facing child restraint with a harness until they reach the maximum height or weight limit allowed by the child restraint manufacturer.

Once a child outgrows the height or weight limit of the harness-equipped forward-facing child restraint, NISSAN recommends that the child be placed in a commercially available booster seat to obtain proper seat belt fit. For a seat belt to fit properly, the booster seat should raise the child so that the shoulder belt is properly positioned across the chest and the top, middle portion of the shoulder. The shoulder belt should not cross the neck or face and should not fall off the shoulder. The lap belt should lie snugly across the lower hips or upper thighs, not the abdomen. A booster seat can only be used in seating positions that have a three-point type seat belt. The booster seat should fit the vehicle seat and have a label certifying that it complies with Federal Motor Vehicle Safety Standards or Canadian Motor Vehicle Safety Standards. Once the child has grown so the shoulder belt is no longer on or near the face and neck and the lap belt can be positioned properly across the lower hips or upper thighs, use the seat belt without the booster seat.

⚠ WARNING

Never let a child stand or kneel on any seat and do not allow a child in the cargo area. The child could be seriously injured or killed in a sudden stop or collision.

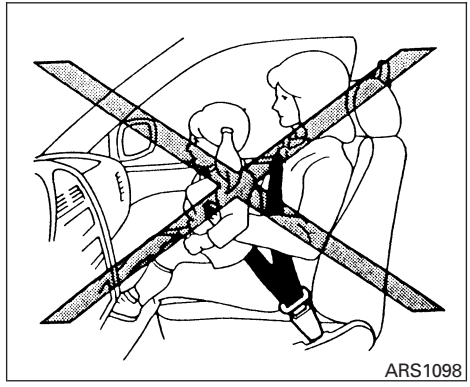
ARS1098

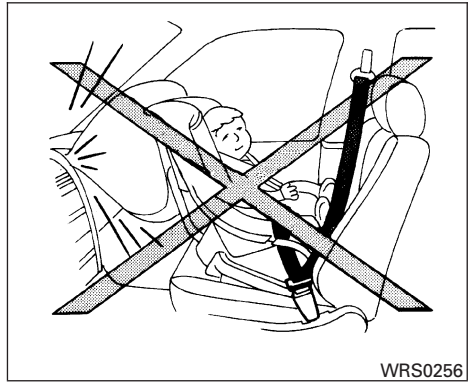
WRS0256

PRECAUTIONS ON CHILD RESTRAINTS

⚠ WARNING

- **Failure to follow the warnings and instructions for proper use and installation of child restraints could result in serious injury or death of a child or other passengers in a sudden stop or collision:**
  - **The child restraint must be used and installed properly. Always follow all of the child restraint manufacturer's instructions for installation and use.**

- **Infants and children should never be held on anyone's lap. Even the strongest adult cannot resist the forces of a collision.**
- **Do not put a seat belt around both a child and another passenger.**
- **NISSAN recommends that all child restraints be installed in the rear seat. Studies show that children are safer when properly restrained in the rear seat than in the front seat. If you must install a forward-facing child restraint in the front seat, refer to "Forward-facing child restraint installation using the seat belts" in this section.**
- **Even with the NISSAN Advanced Air Bag System, never install a rear-facing child restraint in the front seat. An inflating air bag could seriously injure or kill a child. A rear-facing child restraint must only be used in the rear seat.**
- **Be sure to purchase a child restraint that will fit the child and vehicle. Some child restraints may not fit properly in your vehicle.**
- **Child restraint anchorages are designed to withstand only those loads imposed by correctly fitted child restraints. Under no circumstances are they to be used to attach adult seat belts, or other items or equipment to the vehicle. Doing so could damage the child restraint anchorages. The child restraint will not be properly installed using the damaged anchorage, and a child could be seriously injured or killed in a collision.**
- **Never use the anchor points for adult seat belts or harnesses.**
- **A child restraint with a top tether strap should not be used in the front passenger seat.**
- **Keep seatbacks as upright as possible after fitting the child restraint.**
- **Infants and children should always be placed in an appropriate child restraint while in the vehicle.**

- **When the child restraint is not in use, keep it secured with the LATCH system or a seat belt. In a sudden stop or collision, loose objects can injure occupants or damage the vehicle.**

⚠ CAUTION

A child restraint in a closed vehicle can become very hot. Check the seating surface and buckles before placing a child in the child restraint.

This vehicle is equipped with a universal child restraint anchor system, referred to as the LATCH (Lower Anchors and Tethers for CHildren) system. Some child restraints include rigid or webbing-mounted attachments that can be connected to these anchors. For additional information, refer to "LATCH (Lower Anchors and Tethers for CHildren) system" in this section.

If you do not have a LATCH compatible child restraint, the vehicle seat belts can be used.

Several manufacturers offer child restraints for infants and children of various sizes. When selecting any child restraint, keep the following points in mind:

- Choose only a restraint with a label certifying that it complies with Federal Motor Vehicle Safety Standard 213 or Canadian Motor Vehicle Safety Standard 213.
- Check the child restraint in your vehicle to be sure it is compatible with the vehicle's seat and seat belt system.

- If the child restraint is compatible with your vehicle, place your child in the child restraint and check the various adjustments to be sure the child restraint is compatible with your child. Choose a child restraint that is designed for your child's height and weight. Always follow all recommended procedures.
- If the combined weight of the child and child restraint is less than 65 lbs (29.5 kg), you may use either the LATCH anchors or the seat belt to install the child restraint (not both at the same time).
- If the combined weight of the child and child restraint is greater than 65 lbs (29.5 kg), use the vehicle's seat belt (not the lower anchors) to install the child restraint.
- Be sure to follow the child restraint manufacturer's instructions for installation.

All U.S. states and Canadian provinces or territories require that infants and small children be restrained in an approved child restraint at all times while the vehicle is being operated. Canadian law requires the top tether strap on forward-facing child restraints be secured to the designated anchor point on the vehicle.

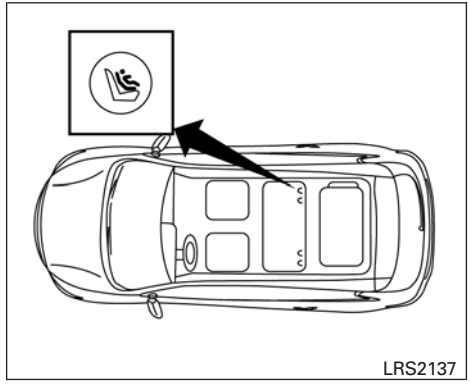

LATCH system lower anchor locations - bench seat

LATCH (Lower Anchors and Tethers for CHildren) SYSTEM

Your vehicle is equipped with special anchor points that are used with LATCH system compatible child restraints. This system may also be referred to as the ISOFIX or ISOFIX compatible system. With this system, you do not have to use a vehicle seat belt to secure the child restraint unless the combined weight of the child and child restraint exceeds 65 lbs (29.5 kg). If the combined weight of the child and child restraint is greater than 65 lbs (29.5 kg), use the vehicle's seat belt (not the lower anchors) to install the child restraint. Be sure to follow the child restraint manufacturer's instructions for installation.

The LATCH lower anchor points are provided to install child restraints in the following positions only:

- 2nd row bench seat – outboard seating positions

LATCH lower anchor

⚠ WARNING

Failure to follow the warnings and instructions for proper use and installation of child restraints could result in serious injury or death of a child or other passengers in a sudden stop or collision:

- **Attach LATCH system compatible child restraints only at the locations shown in the illustration.**
- **Do not secure a child restraint in the 2nd row center position using the LATCH system anchors. The child restraint will not be secured properly.**

- **Inspect the lower anchors by inserting your fingers into the lower anchor area. Feel to make sure there are no obstructions over the anchors such as seat belt webbing or seat cushion material. The child restraint will not be secured properly if the lower anchors are obstructed.**
- **Child restraint anchorages are designed to withstand only those loads imposed by correctly fitted child restraints. Under no circumstances are they to be used to attach adult seat belts, or other items or equipment to the vehicle. Doing so could damage the child restraint anchorages. The child restraint will not be properly installed using the damaged anchorages, and a child could be seriously injured or killed in a collision.**

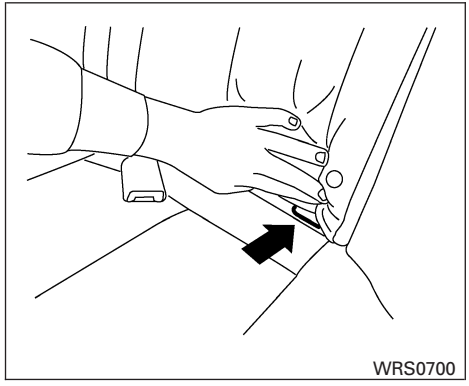

LATCH lower anchor location

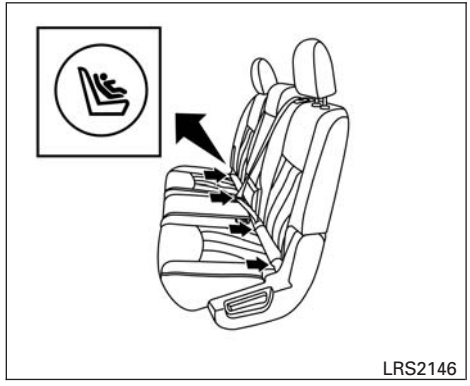

LATCH label locations 2nd row bench

LATCH lower anchor location

The LATCH lower anchors are located at the rear of the seat cushion near the seatback. A label is attached to the seatback to help you locate the LATCH lower anchors.

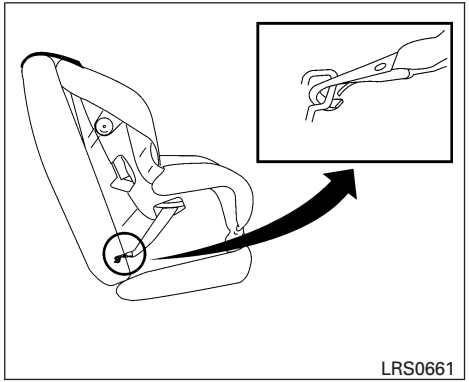

LATCH webbing-mounted attachment

Installing child restraint LATCH lower anchor attachments

LATCH compatible child restraints include two rigid or webbing-mounted attachments that can be connected to two anchors located at certain seating positions in your vehicle. With this system, you do not have to use a vehicle seat belt to secure the child restraint. Check your child restraint for a label stating that it is compatible with LATCH. This information may also be in the instructions provided by the child restraint manufacturer.

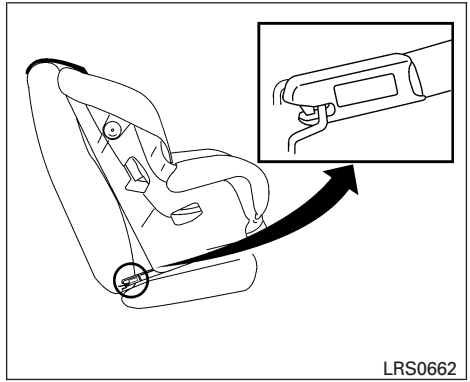

LATCH rigid-mounted attachment

When installing a child restraint, carefully read and follow the instructions in this manual and those supplied with the child restraint.

Top tether anchor

⚠ WARNING

- **Do not allow cargo to contact the top tether strap when it is attached to the top tether anchor. Properly secure the cargo so it does not contact the top tether strap. Cargo that is not properly secured or cargo that contacts the top tether strap may damage it during a collision. A child could be seriously injured or killed in a collision if the top tether strap is damaged.**
- **Child restraint anchorages are designed to withstand only those loads imposed by correctly fitted child restraints. Under no circumstances are they to be used to attach adult seat belts, or other items or equipment to the vehicle. Doing so could damage the child restraint anchorages. The child restraint will not be properly installed using the damaged anchorages, and a child could be seriously injured or killed in a collision.**

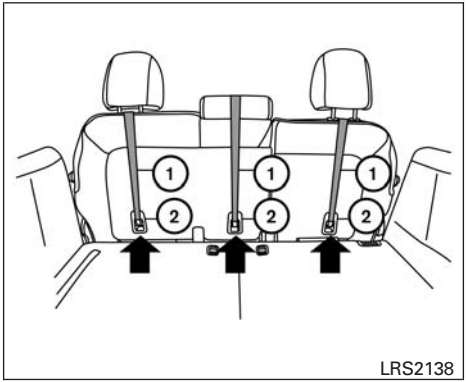

2nd row bench seat

① Top tether strap

② Anchor point

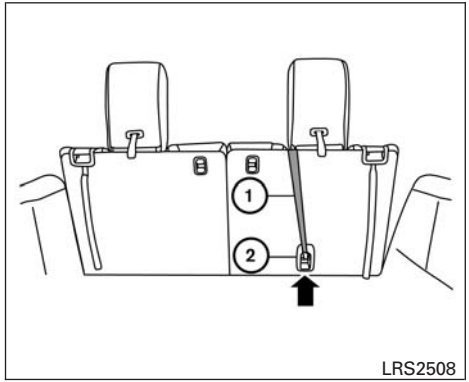

3rd row bench seat

Top tether anchor point locations

Anchor points are located in the following locations:

- 2nd row bench on the bottom of the seatback in the seating positions shown.
- 3rd row bench on the bottom of the seatback on the passenger side seating position as shown.

If you have any questions when installing a top tether strap, consult your NISSAN dealer for details.

REAR-FACING CHILD RESTRAINT INSTALLATION USING LATCH

For additional information, refer to all Warnings and Cautions in the “Child Safety” and “Child Restraint” sections of this manual before installing a child restraint.

NISSAN does not recommend the use of the lower anchors if the combined weight of the child and the child restraint exceeds 65 lbs (29.5 kg). If the combined weight of the child and the child restraint is greater than 65 lbs (29.5 kg), use the vehicle’s seat belt (not the lower anchors) to install the child restraint. Be sure to follow the child restraint manufacturer’s instructions for installation.

Follow these steps to install a rear-facing child restraint in the 2nd row seats using the LATCH system:

1. Position the child restraint on the seat. Always follow the child restraint manufacturer’s instructions.

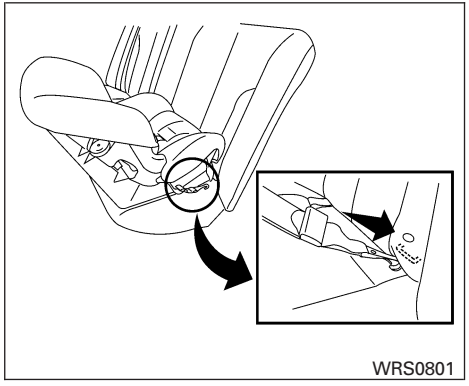

Rear-facing webbing-mounted – step 2

2. Secure the child restraint anchor attachments to the LATCH lower anchors. Check to make sure the LATCH attachment is properly attached to the lower anchors.

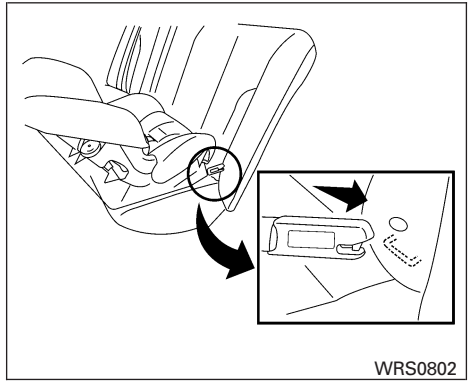

Rear-facing rigid-mounted – step 2

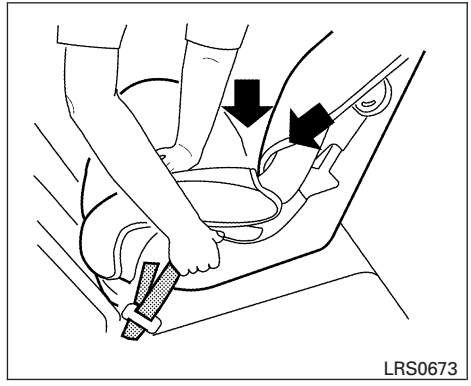

Rear-facing – step 3

3. For child restraints that are equipped with webbing-mounted attachments, remove any additional slack from the anchor attachments. Press downward and rearward firmly in the center of the child restraint with your hand to compress the vehicle seat cushion and seatback while tightening the webbing of the anchor attachments.

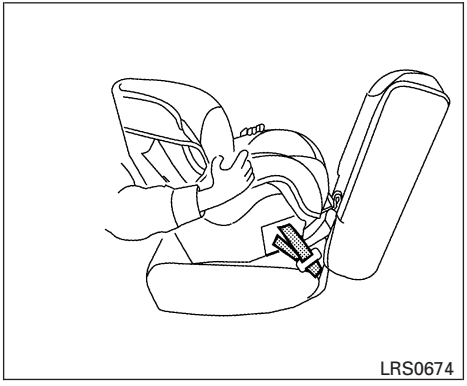

Rear-facing – step 4

4. After attaching the child restraint, test it before you place the child in it. Push it from side to side while holding the child restraint near the LATCH attachment path. The child restraint should not move more than 1 inch (25 mm), from side to side. Try to tug it forward and check to see if the LATCH attachment holds the restraint in place. If the restraint is not secure, tighten the LATCH attachment as necessary, or put the restraint in another seat and test it again. You may need to try a different child restraint or try installing by using the vehicle seat belt (if applicable). Not all child restraints fit in all types of vehicles.
5. Check to make sure the child restraint is properly secured prior to each use. If the child restraint is loose, repeat steps 2 through 4.

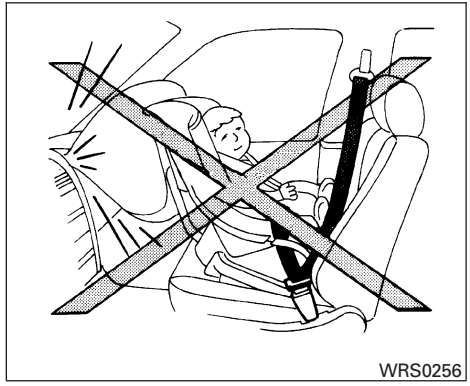

REAR-FACING CHILD RESTRAINT INSTALLATION USING THE SEAT BELTS

⚠ WARNING

The three-point seat belt with Automatic Locking Retractor (ALR) must be used when installing a child restraint. Failure to use the ALR mode will result in the child restraint not being properly secured. The restraint could tip over or be loose and cause injury to a child in a sudden stop or collision. Also, it can change the operation of the front passenger air bag. For additional information, refer to "Supplemental air bag warning light" in this section.

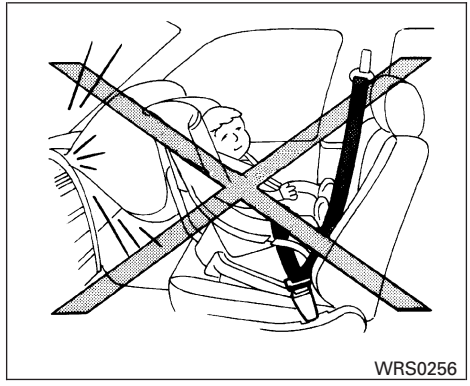

Rear-facing – step 1

For additional information, refer to all Warnings and Cautions in the "Child safety" and "Child restraints" sections of this manual before installing a child restraint.

NISSAN does not recommend the use of the lower anchors if the combined weight of the child and the child restraint exceeds 65 lbs (29.5 kg). If the combined weight of the child and the child restraint is greater than 65 lbs (29.5 kg), use the vehicle's seat belt (not the lower anchors) to install the child restraint. Be sure to follow the child restraint manufacturer's instructions for installation.

Follow these steps to install a rear-facing child restraint using the vehicle seat belts in the rear seats:

1. **Child restraints for infants must be used in the rear-facing direction and therefore must not be used in the front seat.** Position the child restraint on the seat. Always follow the restraint manufacturer's instructions.

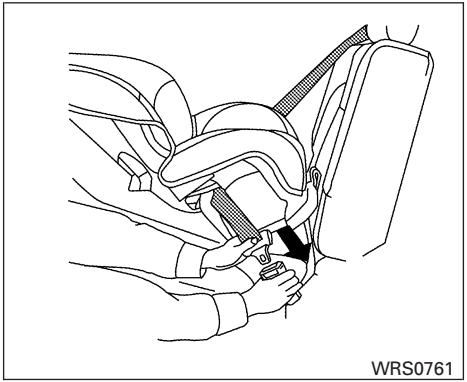

Rear-facing – step 2

2. Route the seat belt tongue through the child restraint and insert it into the buckle until you hear and feel the latch engage. Be sure to follow the child restraint manufacturer's instructions for belt routing.

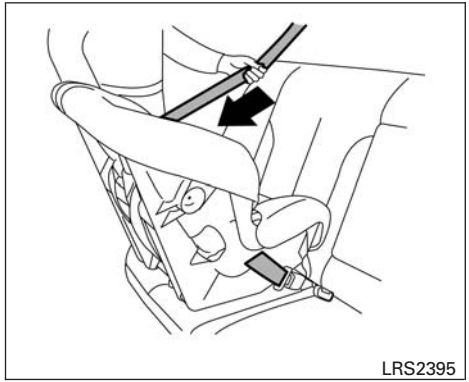

Rear-facing – step 3

3. Pull the shoulder belt until the belt is fully extended. At this time, the seat belt retractor is in the ALR mode (child restraint mode). It reverts to the ELR mode when the seat belt is fully retracted.

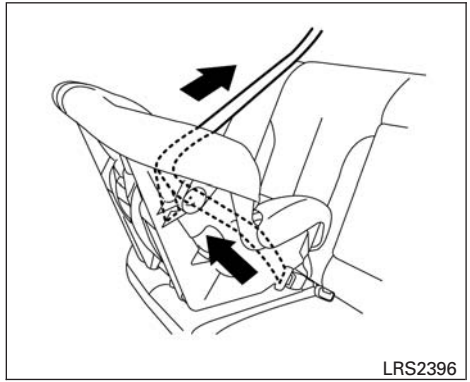

Rear-facing – step 4

4. Allow the seat belt to retract. Pull up on the shoulder belt to remove any slack in the belt.

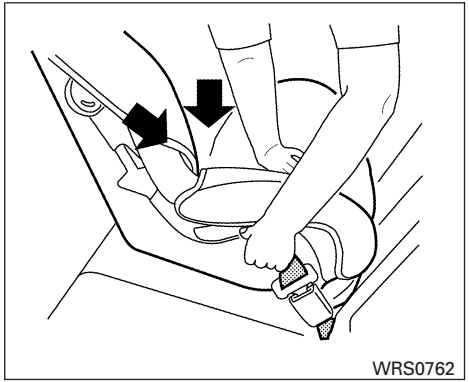

Rear-facing – step 5

5. Remove any additional slack from the seat belt; press downward and rearward firmly in the center of the child restraint to compress the vehicle seat cushion and seatback while pulling up on the seat belt.

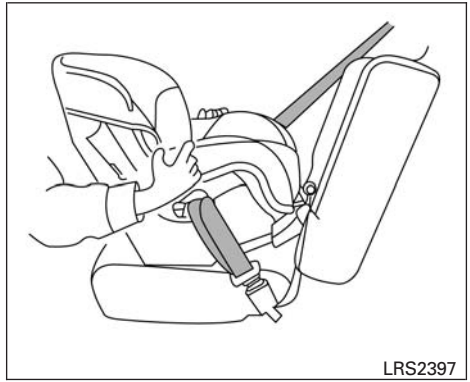

Rear-facing – step 6

6. After attaching the child restraint, test it before you place the child in it. Push it from side to side while holding the child restraint near the seat belt path. The child restraint should not move more than 1 inch (25 mm), from side to side. Try to tug it forward and check to see if the belt holds the restraint in place. If the restraint is not secure, tighten the seat belt as necessary, or put the restraint in another seat and test it again. You may need to try a different child restraint. Not all child restraints fit in all types of vehicles.
7. Check to make sure that the child restraint is properly secured prior to each use. If the seat belt is not locked, repeat steps 1 through 6.

After the child restraint is removed and the seat belt fully retracted, the ALR mode (child restraint mode) is canceled.

FORWARD-FACING CHILD RESTRAINT INSTALLATION USING LATCH

For additional information, refer to all Warnings and Cautions in the “Child Safety” and “Child Restraints” sections of this manual before installing a child restraint.

NISSAN does not recommend the use of the lower anchors if the combined weight of the child and the child restraint exceeds 65 lbs (29.5 kg). If the combined weight of the child and the child restraint is greater than 65 lbs (29.5 kg), use the vehicle’s seat belt (not the lower anchors) to install the child restraint. Be sure to follow the child restraint manufacturer’s instructions for installation.

Follow these steps to install a forward-facing child restraint in the 2nd row seats using the LATCH system:

1. Position the child restraint on the seat. Always follow the child restraint manufacturer's instructions.

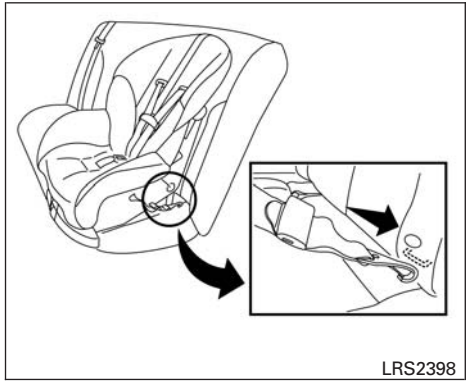

Forward-facing webbing-mounted – step 2

2. Secure the child restraint anchor attachments to the LATCH lower anchors. Check to make sure the LATCH attachment is properly attached to the lower anchors.

   If the child restraint is equipped with a top tether strap, route the top tether strap and secure the tether strap to the tether anchor point. For additional information, refer to "Installing top tether strap" in this section. Do not install child restraints that require the use of a top tether strap in seating positions that do not have a top tether anchor.

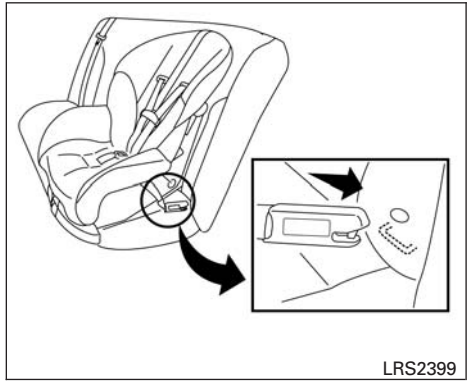

Forward-facing rigid-mounted – step 2

3. The back of the child restraint should be secured against the vehicle seatback.

   If necessary, adjust or remove the head restraint/headrest to obtain the correct child restraint fit. If the head restraint/headrest is removed, store it in a secure place. **Be sure to reinstall the head restraint/headrest when the child restraint is removed.** For additional information, refer to "Head restraints/headrests" in this section for head restraint/headrest adjustment information.

If the seating position does not have an adjustable head restraint/headrest and it is interfering with the proper child restraint fit, try another seating position or a different child restraint.

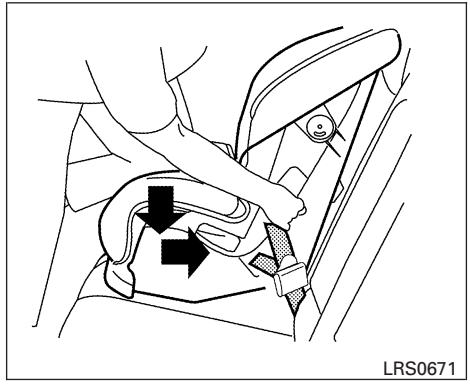

Forward-facing – step 4

4. For child restraints that are equipped with webbing-mounted attachments, remove any additional slack from the anchor attachments. Press downward and rearward firmly in the center of the child restraint with your knee to compress the vehicle seat cushion and seatback while tightening the webbing of the anchor attachments.
5. Tighten the tether strap according to the manufacturer's instructions to remove any slack.

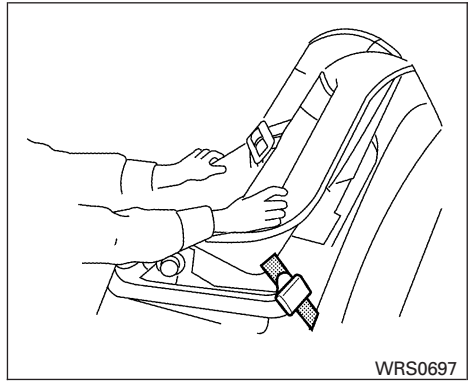

Forward-facing – step 6

6. After attaching the child restraint, test it before you place the child in it. Push it from side to side while holding the child restraint near the LATCH attachment path. The child restraint should not move more than 1 inch (25 mm), from side to side. Try to tug it forward and check to see if the LATCH attachment holds the restraint in place. If the restraint is not secure, tighten the LATCH attachment as necessary, or put the restraint in another seat and test it again. You may need to try a different child restraint. Not all child restraints fit in all types of vehicles.

7. Check to make sure the child restraint is properly secured prior to each use. If the child restraint is loose, repeat steps 3 through 6.

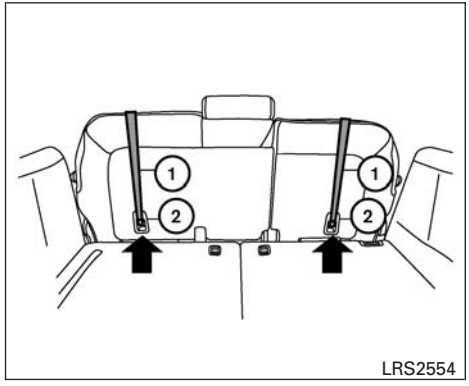

2nd row bench seat

① Top tether strap

② Anchor point

INSTALLING TOP TETHER STRAP

The child restraint top tether strap must be used when installing the child restraint with the LATCH lower anchor attachments.

First, secure the child restraint with the LATCH lower anchors (2nd row bench outboarding seating positions only).

2ND ROW BENCH SEAT

OUTBOARD SEATING POSITIONS

1. Remove the head restraint/headrest and store it in a secure place. Be sure to reinstall the head restraint/headrest when the child restraint is removed. For additional information, refer to “Head restraints/headrests” in this section for headrestraint/headrest adjustment, removal and installation information.
2. Position the top tether strap ① over the seatback.
3. Secure the tether strap to the tether anchor point ② on the bottom of the seatback behind the child restraint.
4. Tighten the tether strap according to the manufacturer’s instructions to remove any slack.

⚠ WARNING

Child restraint anchorages are designed to withstand only those loads imposed by correctly fitted child restraints. Under no circumstances are they to be used to attach adult seat belts, or other items or equipment to the vehicle. Doing so could damage the child restraint anchorages. The child restraint will not be properly installed using the damaged anchorage, and a child could be seriously injured or killed in a collision.

FORWARD-FACING CHILD RESTRAINT INSTALLATION USING THE SEAT BELTS

⚠ WARNING

The three-point seat belt with Automatic Locking Retractor (ALR) must be used when installing a child restraint. Failure to use the ALR mode will result in the child restraint not being properly secured. The restraint could tip over or be loose and cause injury to a child in a sudden stop or collision. Also, it can change the operation of the front passenger air bag. For additional information, refer to "Front passenger air bag and status light" in this section.

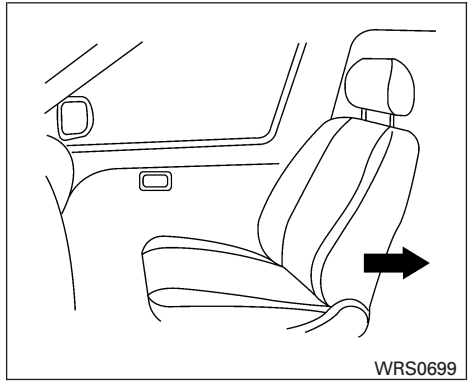

Forward-facing (front passenger seat) – step 1

For additional information, refer to all Warnings and Cautions in the "Child Safety" and "Child Restraint" sections of this manual before installing a child restraint.

NISSAN does not recommend the use of the lower anchors if the combined weight of the child and the child restraint exceeds 65 lbs (29.5 kg). If the combined weight of the child and the child restraint is greater than 65 lbs (29.5 kg), use the vehicle's seat belt (not the lower anchors) to install the child restraint. Be sure to follow the child restraint manufacturer's instructions for installation.

Follow these steps to install a forward-facing child restraint using the vehicle seat belt in the rear seats or in the front passenger seat:

1. **If you must install a child restraint in the front seat, it should be placed in a forward-facing direction only. Move the seat to the rearmost position. Child restraints for infants must be used in the rear-facing direction and, therefore, must not be used in the front seat.**
2. Position the child restraint on the seat. Always follow the child restraint manufacturer's instructions.

   The back of the child restraint should be secured against the vehicle seatback.

   If necessary, adjust or remove the head restraint/headrest to obtain the correct child restraint fit. If the head restraint/headrest is removed, store it in a secure place. **Be sure to reinstall the head restraint/headrest when the child restraint is removed.** For additional information, refer to "Head restraints/headrests" in this section for head restraint/headrest adjustment, removal and installation information.

If the seating position does not have an adjustable head restraint/headrest and it is interfering with the proper child restraint fit, try another seating position or a different child restraint.

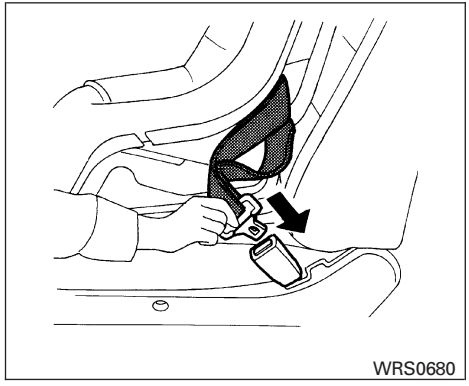

Forward-facing – step 3

3. Route the seat belt tongue through the child restraint and insert it into the buckle until you hear and feel the latch engage. Be sure to follow the child restraint manufacturer's instructions for belt routing.

   If the child restraint is equipped with a top tether strap, route the top tether strap and secure the tether strap to the tether anchor point (2nd row installation and 3rd row passenger side only). For additional information, refer to "Installing top tether strap" in this section. Do not install child restraints that require the use of a top tether strap in seating positions that do not have a top tether anchor.

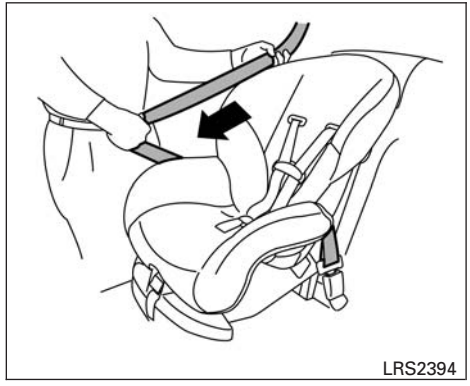

Forward-facing – step 4

4. Pull the shoulder belt until the belt is fully extended. At this time, the seat belt retractor is in the ALR mode (child restraint mode). It reverts to ELR mode when the seat belt is fully retracted.

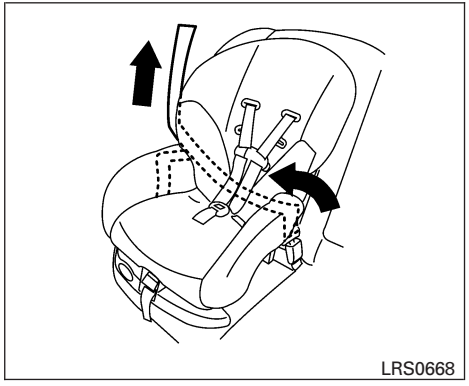

Forward-facing – step 5

5. Allow the seat belt to retract. Pull up on the shoulder belt to remove any slack in the belt.

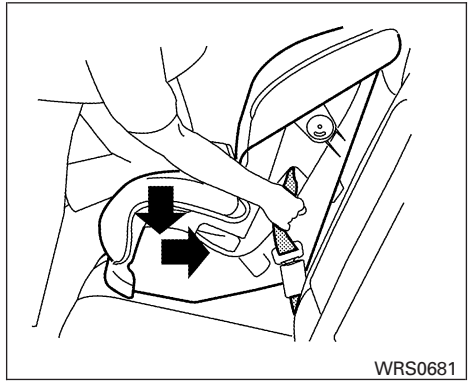

Forward-facing – step 6

6. Remove any additional slack from the seat belt; press downward and rearward firmly in the center of the child restraint with your knee to compress the vehicle seat cushion and seatback while pulling up on the seat belt.

7. Tighten the tether strap according to the manufacturer's instructions to remove any slack.

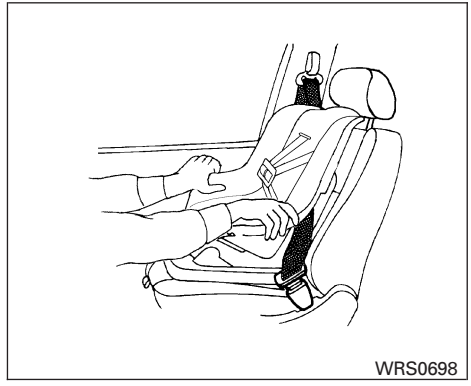

Forward-facing – step 8

8. After attaching the child restraint, test it before you place the child in it. Push it from side to side while holding the child restraint near the seat belt path. The child restraint should not move more than 1 inch (25 mm), from side to side. Try to tug it forward and check to see if the belt holds the restraint in place. If the restraint is not secure, tighten the seat belt as necessary, or put the restraint in another seat and test it again. You may need to try a different child restraint. Not all child restraints fit in all types of vehicles.

9. Check to make sure the child restraint is properly secured prior to each use. If the seat belt is not locked, repeat steps 2 through 8.

Forward-facing – step 10

10. If the child restraint is installed in the front passenger seat, place the ignition switch in the ON position. The front passenger air bag status light should illuminate. If this light is not illuminated refer to “Front passenger air bag and status light” in this section. **Move the child restraint to another seating position.** Have the system checked by a NISSAN dealer.

After the child restraint is removed and the seat belt is fully retracted, the ALR mode (child restraint mode) is canceled.

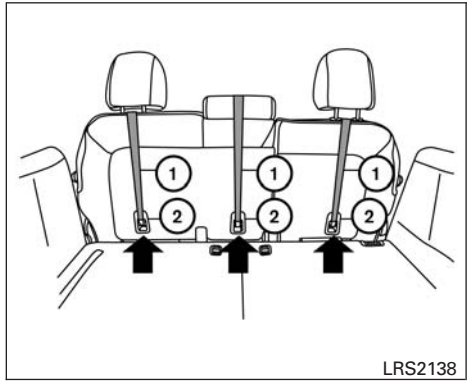

2nd row bench seat

① Top tether strap

② Anchor point

INSTALLING TOP TETHER STRAP

The child restraint top tether strap must be used when installing the child restraint with seat belts.

First, secure the child restraint with the seat belt.

2ND ROW BENCH SEAT

OUTBOARD SEATING POSITIONS

1. Remove the head restraint/headrest and store it in a secure place. Be sure to reinstall the head restraint/headrest when the child restraint is removed. For additional information, refer to “Head restraints/headrests” in this section for headrestraint/headrest adjustment, removal and installation information.
2. Position the top tether strap ① over the seatback.
3. Secure the tether strap to the tether anchor point ② on the bottom of the seatback behind the child restraint.
4. Tighten the tether strap according to the manufacturer’s instructions to remove any slack.

CENTER SEATING POSITION

1. Remove the head restraint/headrest and store it in a secure place. Be sure to reinstall the head restraint/headrest when the child restraint is removed. For additional information, refer to “Head restraints/headrests” in this section for headrestraint/headrest adjustment, removal and installation information.
2. Position the top tether strap ① over the seatback.
3. Secure the tether strap to the tether anchor point ② on the bottom of the seatback behind the child restraint.
4. Tighten the tether strap according to the manufacturer’s instructions to remove any slack. Make sure the headrestraint/headrest does not contact the top tether strap.

If you have any questions when installing a top tether strap, consult your NISSAN dealer for details.

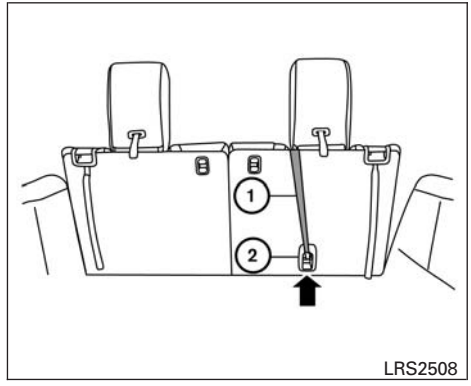

3rd row bench seat

① Top tether strap

② Anchor point

INSTALLING TOP TETHER STRAP (3rd row bench seat)

⚠WARNING

In the 3rd row bench seat, a child restraint with a top tether strap can only be used on the passenger side seating position. Do not place in the driver’s side seating position and attempt to angle the tether strap to the passenger side seating position.

The passenger side of the 3rd row bench seat is the seating position that can use a top tether strap.

First, secure the child restraint with the seat belt, as applicable.

1. Position the top tether strap to the outboard side of the head restraint/headrest as shown.
2. Secure the tether strap to the tether anchor point on the bottom of the seatback behind the child restraint.
3. Tighten the tether strap according to the manufacturer's instructions to remove any slack. Make sure the head restraint/headrest does not contact the top tether strap.

If you have any questions when installing a top tether strap, consult your NISSAN dealer for details.

BOOSTER SEATS

Precautions on booster seats

⚠ WARNING

If a booster seat and seat belt are not used properly, the risk of a child being injured in a sudden stop or collision greatly increases:

- **Make sure the shoulder portion of the belt is away from the child's face and neck and the lap portion of the belt does not cross the stomach.**
- **Make sure the shoulder belt is not behind the child or under the child's arm.**
- **A booster seat must only be installed in a seating position that has a lap/shoulder belt.**

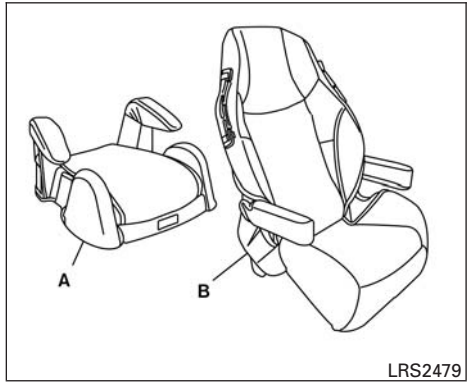

A. Low back booster seat

B. High back booster seat

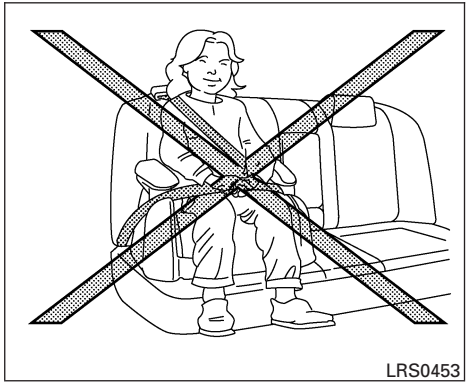

Booster seats of various sizes are offered by several manufacturers. When selecting any booster seat, keep the following points in mind:

- Choose only a booster seat with a label certifying that it complies with Federal Motor Vehicle Safety Standard 213 or Canadian Motor Vehicle Safety Standard 213.
- Check the booster seat in your vehicle to be sure it is compatible with the vehicle's seat and seat belt system.
- Make sure the child's head will be properly supported by the booster seat or vehicle seat. The seatback must be at or above the center of the child's ears. For example, if a low back booster seat is chosen, the vehicle seatback must be at or above the center of the child's ears. If the seatback is lower than the center of the child's ears, a high back booster seat should be used.
- If the booster seat is compatible with your vehicle, place the child in the booster seat and check the various adjustments to be sure the booster seat is compatible with the child. Always follow all recommended procedures.

All U.S. states and Canadian provinces or territories require that infants and small children be restrained in an approved child restraint at all times while the vehicle is being operated.

The instructions in this section apply to booster seat installation in the rear seats or the front passenger seat.

Booster seat installation

⚠ CAUTION

Do not use the lap/shoulder belt in the Automatic Locking Retractor (ALR) mode when using a booster seat with the seat belts.

For additional information, refer to all Warnings and Cautions in the “Child Safety,” “Child Restraint” and “Booster Seats” sections of this manual before installing a child restraint.

Follow these steps to install a booster seat in the 2nd or 3rd rows or in the front passenger seat:

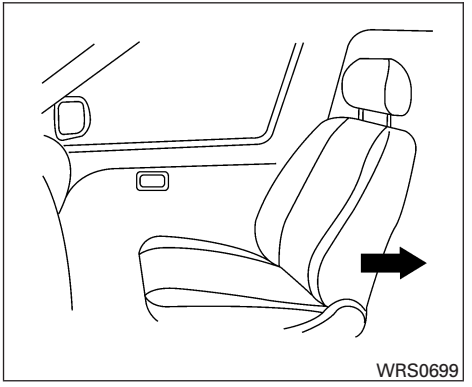

1. **If you must install a booster seat in the front seat, move the seat to the rearmost position.**
2. Position the booster seat on the seat. Only place it in a front-facing direction. Always follow the booster seat manufacturer’s instructions.

Front passenger position

3. The booster seat should be positioned on the vehicle seat so that it is stable.

   If necessary, adjust or remove the head restraint/headrest to obtain the correct booster seat fit. If the head restraint/headrest is removed, store it in a secure place. **Be sure to reinstall the head restraint/headrest when the booster seat is removed.** For additional information, refer to “Head restraints/headrests” in this section for head restraint/headrest adjustment, removal and installation information.

If the seating position does not have an adjustable head restraint/headrest and it is interfering with the proper booster seat fit, try another seating position or a different booster seat.

4. Position the lap portion of the seat belt low and snug on the child's hips. Be sure to follow the booster seat manufacturer's instructions for adjusting the seat belt routing.
5. Pull the shoulder belt portion of the seat belt toward the retractor to take up extra slack. Be sure the shoulder belt is positioned across the top, middle portion of the child's shoulder. Be sure to follow the booster seat manufacturer's instructions for adjusting the seat belt routing.
6. Follow the warnings, cautions and instructions for properly fastening a seat belt shown in "Three-point type seat belt with retractor" in this section.

LRS0865

7. If the booster seat is installed in the front passenger seat, place the ignition switch in the ON position. The front passenger air bag status light may or may not illuminate, depending on the size of the child and the type of booster seat being used. For additional information, refer to "Front passenger air bag and status light" in this section.

PRECAUTIONS ON SRS

This SRS section contains important information concerning the following systems:

- Driver and passenger supplemental front-impact air bag (NISSAN Advanced Air Bag System)
- Front seat-mounted side-impact supplemental air bag
- Roof-mounted curtain side-impact and roll-over supplemental air bag
- Seat belt with pretensioner

Supplemental front-impact air bag system

The NISSAN Advanced Air Bag System can help cushion the impact force to the head and chest of the driver and front passenger in certain frontal collisions.

Front seat-mounted side-impact supplemental air bag system

This system can help cushion the impact force to the chest area of the driver and front passenger in certain side-impact collisions. The side air bags are designed to inflate on the side where the vehicle is impacted.

Roof-mounted curtain side-impact and rollover supplemental air bag system

This system can help cushion the impact force to the head of occupants in front and rear outboard seating positions in certain side-impact or rollover collisions. In a side impact, the curtain air bags are designed to inflate on the side where the vehicle is impacted. In a rollover, the curtain air bags are designed to inflate and remain inflated for a short time.

The SRS is designed to **supplement** the crash protection provided by the driver and front passenger seat belts and is **not a substitute** for them. Seat belts should always be correctly worn and the occupant seated a suitable distance away from the steering wheel, instrument panel and door finishers. For additional information, refer to "Seat belts" in this section for instructions and precautions on seat belt usage.

The supplemental air bags operate only when the ignition switch is placed in the ON position.

After placing the ignition switch in the ON position, the supplemental air bag warning light illuminates. The supplemental air bag warning light will turn off after about 7 seconds if the system is operational.

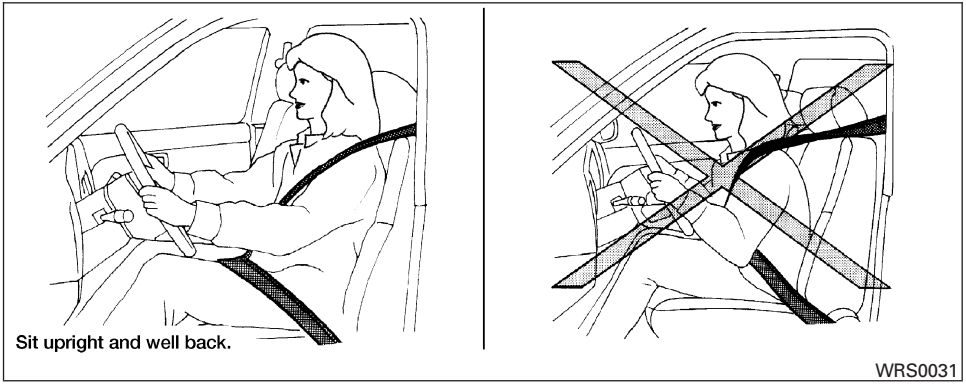

⚠ WARNING

- **The front air bags ordinarily will not inflate in the event of a side impact, rear impact, rollover, or lower severity frontal collision. Always wear your seat belts to help reduce the risk or severity of injury in various kinds of accidents.**
- **The front passenger air bag will not inflate if the passenger air bag status light is lit or if the front passenger seat is unoccupied. For additional information, refer to "Front passenger air bag and status light" in this section.**
- **The seat belts and the front air bags are most effective when you are sitting well back and upright in the seat. The front air bags inflate with great force. Even with the NISSAN Advanced Air Bag System, if you are unrestrained, leaning forward, sitting sideways or out of position in any way, you are at greater risk of injury or death in a crash. You may also receive serious or fatal injuries from the front air bag if you are up against it when it inflates. Always sit back against the seatback and as far away as practical from the steering wheel or instrument panel. Always use the seat belts.**

- **The driver and front passenger seat belt buckles are equipped with sensors that detect if the seat belts are fastened. The Advanced Air Bag System monitors the severity of a collision and seat belt usage then inflates the air bags as needed. Failure to properly wear seat belts can increase the risk or severity of injury in an accident.**
- **The front passenger seat is equipped with an Occupant Classification Sensor (weight sensor) that turns the front passenger air bag OFF under some conditions. This sensor is only used in this seat. Failure to be properly seated and wearing the seat belt can increase the risk or severity of injury in an accident. For additional information, refer to "Front passenger air bag and status light" in this section.**
- **Keep hands on the outside of the steering wheel. Placing them inside the steering wheel rim could increase the risk that they are injured when the front air bag inflates.**

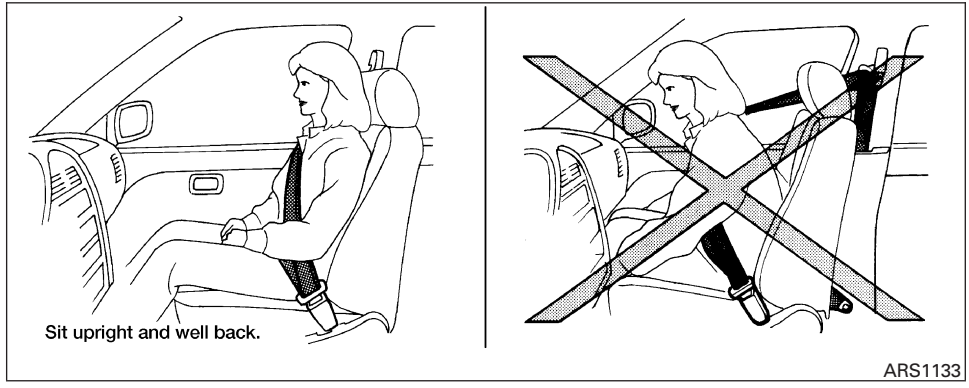

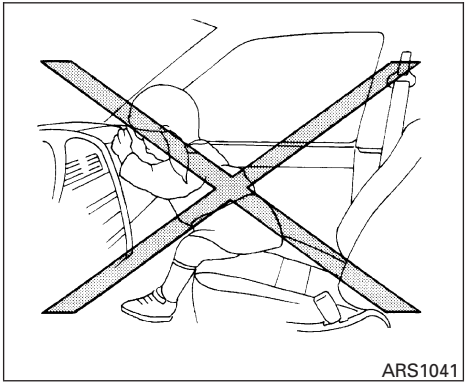
ARS1041

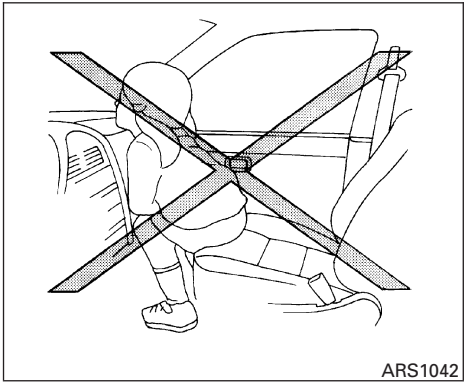
ARS1042

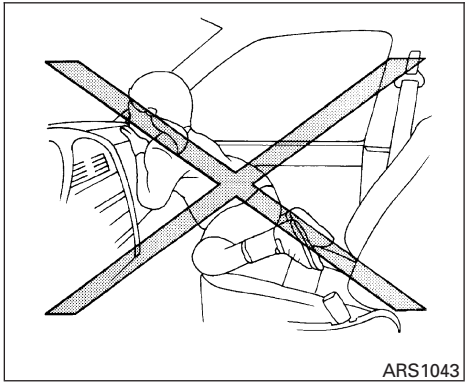
ARS1043

⚠ WARNING

- **Never let children ride unrestrained or extend their hands or face out of the window. Do not attempt to hold them in your lap or arms. Some examples of dangerous riding positions are shown in the illustrations.**

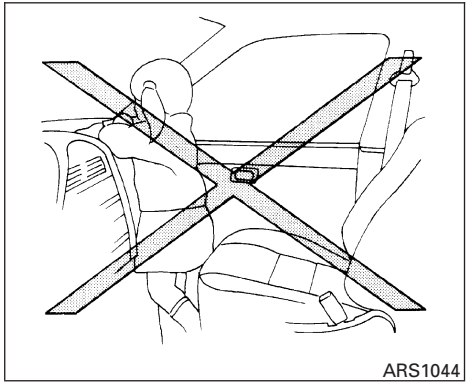
ARS1044

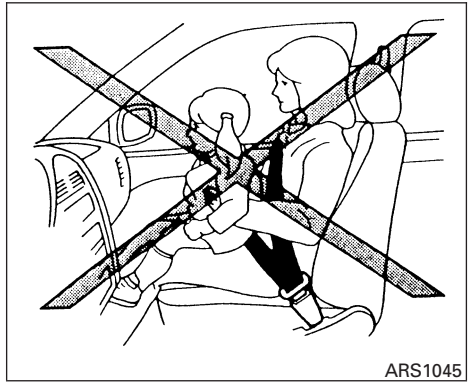
ARS1045

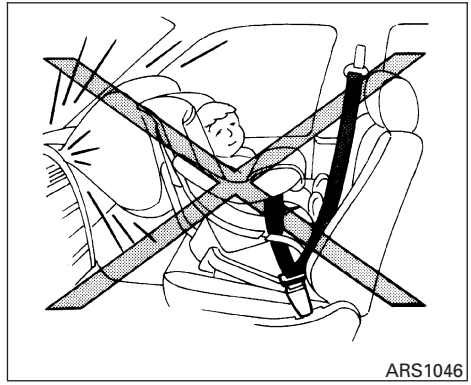
ARS1046

⚠ WARNING

- **Children may be severely injured or killed when the front air bags, side air bags or curtain air bags inflate if they are not properly restrained. Pre-teens and children should be properly restrained in the rear seat, if possible.**
- **Even with the NISSAN Advanced Air Bag System, never install a rear-facing child restraint in the front seat. An inflating front air bag could seriously injure or kill your child. For additional information, refer to "Child restraints" in this section.**

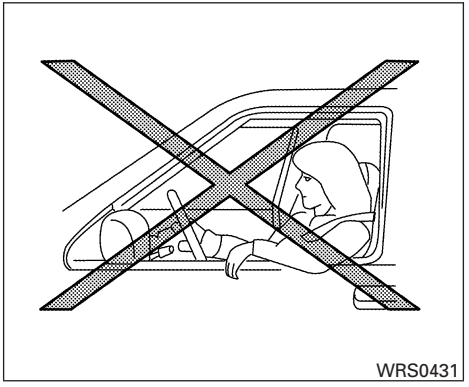
WRS0431

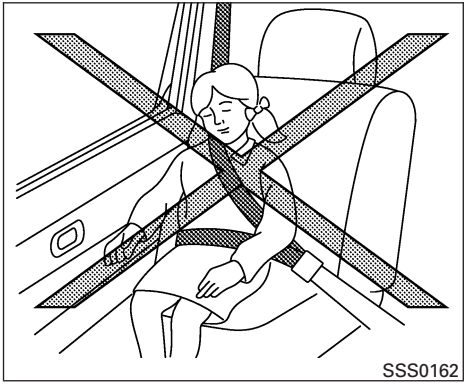
SSS0162

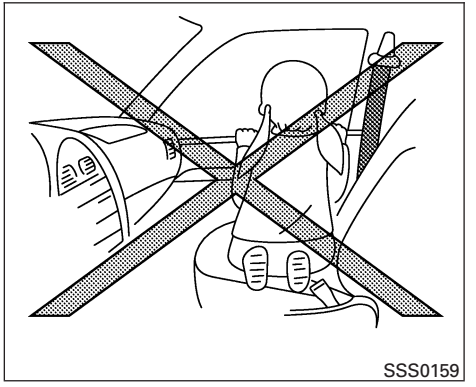
SSS0159

⚠ WARNING

Front seat-mounted side-impact supplemental air bags and roof-mounted curtain side-impact and rollover supplemental air bags:

- **The side air bags and curtain air bags ordinarily will not inflate in the event of a frontal impact, rear impact, or lower severity side collision. Always wear your seat belts to help reduce the risk or severity of injury in various kinds of accidents.**

⚠ WARNING

- **The seat belts, the side air bags and curtain air bags are most effective when you are sitting well back and upright in the seat with both feet on the floor. The side air bag and curtain air bag inflate with great force. Do not allow anyone to place their hand, leg or face near the side air bag on the side of the seatback of the front seat or near the side roof rails. Do not allow anyone sitting in the front seats or rear outboard seats to extend their hand out of the window or lean against the door. Some examples of dangerous riding positions are shown in the previous illustrations.**

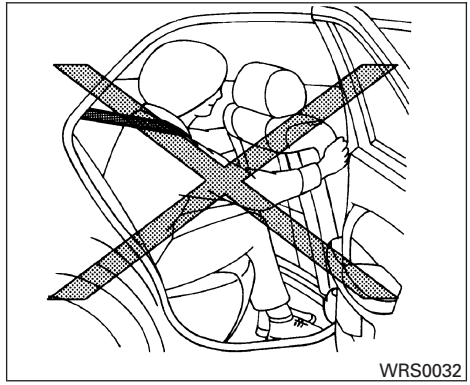

⚠ WARNING

- **When sitting in the 2nd row rear seat, do not hold onto the seatback of the front seat. If the side air bag inflates, you may be seriously injured. Be especially careful with children, who should always be properly restrained. Some examples of dangerous riding positions are shown in the illustrations**
- **Do not use seat covers on the front seatbacks. They may interfere with side air bag inflation.**

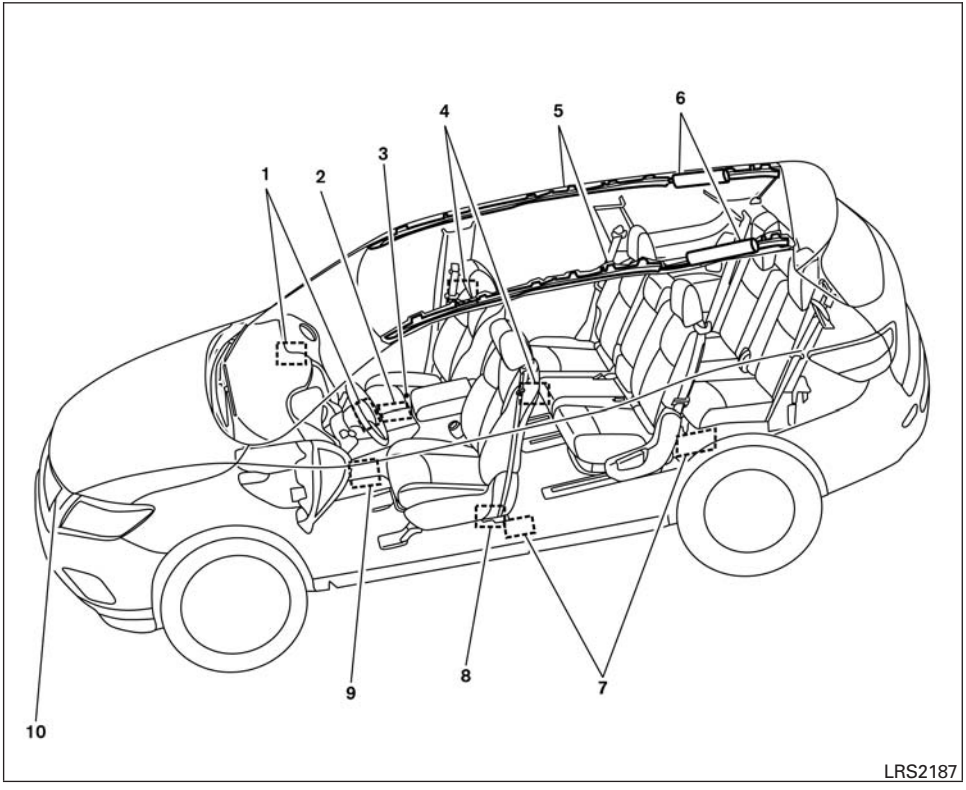

NISSAN Advanced Air Bag System (front seats)

1. Supplemental front-impact air bag modules
2. Air bag Control Unit (ACU)
3. Occupant classification sensor (weight sensor)
4. Front seat-mounted side-impact supplemental air bag modules
5. Roof-mounted curtain side-impact and rollover supplemental air bags
6. Roof-mounted curtain side-impact and rollover supplemental air bag inflators
7. Satellite sensors
8. Seat belt with pretensioner
9. Pressure sensors in door (driver's side shown; passenger side similar)
10. Crash zone sensor

⚠ WARNING

To ensure proper operation of the passenger's advanced air bag system, please observe the following items.

- **Do not allow a passenger in the 2nd row to push or pull on the seatback pocket.**

- **Do not place heavy loads heavier than 2.2 lb (1 kg) on the seatback, head restraint/headrest or in the seatback pocket.**
- **Do not store luggage behind the seat that can press into the seatback.**
- **Do not position the front passenger seat so it contacts the 2nd row. If the front seat does contact the 2nd row, the air bag system may determine a sensor malfunction has occurred and the front passenger air bag status light may illuminate and the supplemental air bag warning light may flash.**
- **If a forward-facing child restraint is installed in the front passenger seat, do not position the front passenger seat so the child restraint contacts the instrument panel. If the child restraint does contact the instrument panel, the system may determine the seat is occupied and the passenger air bag may deploy in a collision. Also the front passenger air bag status light may not illuminate. For additional information, refer to "Child restraints" in this section for information about installing and using child restraints.**
- **Confirm the operating condition with the front passenger air bag status light.**
- **If you notice that the front passenger air bag status light is not operating as described in this section, please take your vehicle to your NISSAN dealer to check the occupant classification system.**
- **Until you have confirmed with your dealer that your passenger seat occupant classification system is working properly, position the occupants in the rear seating positions.**

This vehicle is equipped with the NISSAN Advanced Air Bag System for the driver and front passenger seats. This system is designed to meet certification requirements under U.S. regulations. It is also permitted in Canada. **All of the information, cautions and warnings in this manual must be followed.**

The driver supplemental front-impact air bag is located in the center of the steering wheel. The passenger supplemental front-impact air bag is mounted in the dashboard above the glove box. The front air bags are designed to inflate in higher severity frontal collisions, although they may inflate if the forces in another type of collision are similar to those of a higher severity frontal impact. They may not inflate in certain frontal collisions. Vehicle damage (or lack of it) is not always an indication of proper front air bag system operation.

The NISSAN Advanced Air Bag System has dual stage inflators. It also monitors information from the crash zone sensor and the Air bag Control Unit (ACU). Inflator operation is based on the severity of a collision and seat belt usage for the driver. For the front passenger, the occupant classification sensor is also monitored. Based on information from the sensor, only one front air bag may inflate in a crash, depending on the crash severity. Additionally, the front passenger air bag may be automatically turned OFF under some conditions, depending on the weight detected on the passenger seat and how the seat belt is used. If the front passenger air bag is OFF, the passenger air bag status light will be illuminated (if the seat is unoccupied, the light will not be illuminated, but the air bag will be off). For additional information, refer to "Front passenger air bag and status light" in this section. One front air bag inflating does not indicate improper performance of the system.

If you have any questions about your air bag system, please contact NISSAN or your NISSAN dealer. If you are considering modification of your vehicle due to a disability, you may also contact NISSAN. Contact information is contained in the front of this Owner's Manual.

When a front air bag inflates, a fairly loud noise may be heard, followed by the release of smoke. This smoke is not harmful and does not indicate a fire. Care should be taken to not inhale it, as it may cause irritation and choking. Those with a history of a breathing condition should get fresh air promptly.

Front air bags, along with the use of seat belts, help to cushion the impact force on the face and chest of the front occupants. They can help save lives and reduce serious injuries. However, an inflating front air bag may cause facial abrasions or other injuries. Front air bags do not provide restraint to the lower body.

Even with NISSAN advanced air bags, seat belts should be correctly worn and the driver and passenger seated upright as far as practical away from the steering wheel or instrument panel. The front air bags inflate quickly in order to help protect the front occupants. Because of this, the force of the front air bag inflating can increase the risk of injury if the occupant is too close to, or is against, the front air bag module during inflation.

The front air bags deflate quickly after a collision.

The front air bags operate only when the ignition switch is placed in the ON position.

After placing the ignition switch in the ON position, the supplemental air bag warning light illuminates. The supplemental air bag warning light will turn off after about 7 seconds if the system is operational.

Front passenger air bag and status light

⚠ WARNING

The front passenger air bag is designed to automatically turn OFF under some conditions. Read this section carefully to learn how it operates. Proper use of the seat, seat belt and child restraints is necessary for most effective protection. Failure to follow all instructions in this manual concerning the use of seats, seat belts and child restraints can increase the risk or severity of injury in an accident.

Status light

The front passenger seat is equipped with an Occupant Classification Sensor (weight sensor) that turns the front passenger air bag on or off depending on the weight applied to the passenger seat. The status of the passenger air bag (ON or OFF) is indicated by a passenger air bag status light which is located on the instrument panel.

After the ignition switch is placed in the "ON" position, the front passenger air bag status light on the instrument panel illuminates for about 7 seconds and then turns off or remains illuminated depending on the front passenger seat occupied status. The light operates as follows:

- Unoccupied passenger's seat: The light is OFF and the front passenger air bag is OFF and will not inflate in a crash.
- Passenger's seat occupied by a small adult, child or child restraint as outlined in the Safety section of the owner's manual: The light illuminates to indicate that the front passenger air bag is OFF and will not inflate in a crash.
- Occupied passenger seat and the passenger meet the conditions as outlined in the Safety section of the owner's manual: The light is OFF to indicate that the front passenger air bag is operational.

In addition to the above, certain objects placed on the front passenger seat may also cause the light to operate as described above depending on their weight.

For additional information related to the normal operation and troubleshooting of this Occupant Classification Sensor system, please refer to "Normal operation" and "Troubleshooting" in this section.

Front passenger air bag

The front passenger air bag is designed to automatically turn OFF when the vehicle is operated under some conditions as described below in accordance with U.S. regulations. If the front passenger air bag is OFF it will not inflate in a crash. The driver air bag and other air bags in your vehicle are not part of this system.

The purpose of the regulation is to help reduce the risk of injury or death from an inflating air bag to certain front passenger seat occupants, such as children, by requiring the air bag to be automatically turned OFF. Certain sensors are used to meet the requirements.

The occupant classification sensor in this vehicle is a weight sensor. It is designed to detect an occupant and objects on the seat by weight. For example, if a child is in the front passenger seat, the Advanced Air Bag System is designed to turn the passenger air bag OFF in accordance with the regulations. Also, if a child restraint of the type specified in the regulations is on the seat, its weight and the child's weight can be detected and cause the air bag to turn OFF.

Front passenger seat adult occupants who are properly seated and using the seat belt as outlined in this manual should not cause the passenger air bag to be automatically turned OFF. For small adults it may be turned OFF, however if the occupant takes his/her weight off the seat cushion (for example, by not sitting upright, by sitting on an edge of the seat, or by otherwise being out of position), this could cause the sensor to turn the air bag OFF. Always be sure to be seated and wearing the seat belt properly for the most effective protection by the seat belt and supplemental air bag.

NISSAN recommends that pre-teens and children be properly restrained in a rear seat. NISSAN also recommends that appropriate child restraints and booster seats be properly installed in a rear seat. If this is not possible, the occupant classification sensor is designed to operate as described above to turn the front passenger air

bag OFF for specified child restraints as required by the regulations. Failing to properly secure child restraints and to use the ALR mode may allow the restraint to tip or move in a collision or sudden stop. This can also result in the passenger air bag inflating in a crash instead of being OFF. For additional information, refer to “Child restraints” in this section for proper use and installation.

If the front passenger seat is not occupied, the passenger air bag is designed not to inflate in a crash. However, heavy objects placed on the seat could result in air bag inflation, because of the object’s weight detected by the occupant classification sensor. Other conditions could also result in air bag inflation, such as if a child is standing on the seat, or if two children are on the seat, contrary to the instructions in this manual. Always be sure that you and all vehicle occupants are seated and restrained properly.

Using the passenger air bag status light, you can monitor when the front passenger air bag is automatically turned OFF with the seat occupied. The light will not illuminate when the front passenger seat is unoccupied.

If an adult occupant is in the seat but the passenger air bag status light is illuminated (indicating that the air bag is OFF), it could be that the person is a small adult, or is not sitting on the seat properly or not using the seat belt properly.

If a child restraint must be used in the front seat, the passenger air bag status light may or may not be illuminated, depending on the size of the child and the type of child restraint being used. If the air bag status light is not illuminated (indicating that the air bag might inflate in a crash), it could be that the child restraint or seat belt is not being used properly. Make sure that the child restraint is installed properly, the seat belt is used properly and the occupant is positioned properly. If the air bag status light is not illuminated, reposition the occupant or child restraint in a rear seat.

If the passenger air bag status light will not illuminate even though you believe that the child restraint, the seat belts and the occupant are properly positioned, the system may be sensing an unoccupied seat (in which case the air bag is OFF). Your NISSAN dealer can check that the system is OFF by using a special tool. However, until you have confirmed with your dealer that your air bag is working properly, reposition the occupant or child restraint in a rear seat.

The air bag system and passenger air bag status light will take a few seconds to register a change in the passenger seat status. For example, if a large adult who is sitting in the front passenger seat exits the vehicle, the passenger air bag status light will go from OFF to ON for a few seconds and then to OFF. This is normal system operation and does not indicate a malfunction.

If a malfunction occurs in the front passenger air bag system, the supplemental air bag warning light , located in the meter and gauges area of the instrument panel, will blink. Have the system checked by a NISSAN dealer.

Normal operation

In order for the Occupant Classification System to classify the right front passenger based on weight, please follow the precautions and steps outlined below:

Precautions

- Make sure there are no objects weighing over 2.2 lbs (1 kg) hanging on the seat or placed in the seat-back pocket.
- Make sure that a child seat or other object is not pressing against the rear of the seat-back.
- Make sure that a rear passenger is not pushing or pulling on the back of the front passenger’s seat.
- Make sure that the front seat or seat-back is not forced back against an object on the seat or floor behind it.

- Make sure that there is no object placed under the front passenger's seat.

Steps

1. Adjust the seat as outlined in the "Seats" section of the Owner's Manual. Sit upright, leaning against the seat back, and centered on the seat cushion with your feet comfortably extended to the floor.
2. Make sure there are no objects on the occupant's lap.
3. Fasten the seat belt as outlined in the "Seat belts" section of the Owner's Manual.
4. Remain in this position for 30 seconds allowing the system to classify the passenger before the vehicle is put into motion.
5. Ensure proper classification by checking the passenger air bag status light.

NOTE:

This vehicle's Occupant Classification System locks the classification during driving so it is important that you confirm that the passenger is properly classified prior to driving. Also, the Occupant Classification System may recalculate the weight of the occupant when the vehicle comes to a stop (i.e stop light, stop sign etc.), so front passenger seat occupants should continue to remain seated as outlined above.

Troubleshooting

If you think the passenger air bag status light is incorrect:

1. If the light is ON with no front passenger and no objects on the front passenger seat:

This may be due to the following conditions that may be interfering with the weight sensors:

- An object weighing over 2.2 lbs (1 kg) hanging on the seat or placed in the seat-back pocket.
- A child seat or other object pressing against the rear of the seat-back.
- A rear passenger pushing or pulling on the back of the front passenger's seat.
- The front seat or seat-back is forced back against an object on the seat or floor behind it.
- An object placed under the front passenger's seat.
- An object placed between the seat cushion and center console or between door and cushion.

If the vehicle is moving please come to a stop when it is safe to do so. Check and correct any of the above conditions. Restart the vehicle and wait one minute.

NOTE:

A system check will be performed during which the passenger air bag status light will remain lit for about 7 seconds initially.

If the light is still on after this, the vehicle should be checked by a NISSAN dealer as soon as possible.

2. If the light is ON with an adult occupying the front passenger seat:

- Occupant is a small adult → the air bag light is functioning as intended. The front passenger air bag is suppressed.

However, if the occupant is not a small adult, then this may be due to the following conditions that may be interfering with the weight sensors:

- Occupant is not sitting upright, leaning against the seat back, and centered on the seat cushion with feet comfortably extended to the floor.
- A child seat or other object pressing against the rear of the seat-back.
- A rear passenger pushing or pulling on the back of the front passenger's seat.
- The front seat or seat-back is forced back against an object on the seat or floor behind it.
- An object placed under the front passenger's seat.
- An object placed between the seat cushion and center console or between the seat cushion and the door.

If the vehicle is moving please come to a stop when it is safe to do so. Check and correct any of the above conditions. Restart the vehicle and wait one minute.

NOTE:

A system check will be performed during which the passenger air bag status light will remain lit for about 7 seconds initially.

If the light is still on after this, the person should be advised not to ride in the front passenger seat and the vehicle should be checked by a NISSAN dealer as soon as possible.

3. If the light is OFF with small adult, child or child restraint occupying the front passenger seat.

   This may be due to the following conditions that may be interfering with the weight sensors:

- Small adult or child is not sitting upright, leaning against the seat back, and centered on the seat cushion with feet comfortably extended to the floor.
- The child restraint is not properly installed, as outlined in the "Child restraints" section of the Owner's Manual.
- An object weighing over 2.2 lbs (1 kg) hanging on the seat or placed in the seat-back pocket.
- A child seat or other object pressing against the rear of the seat-back.
- A rear passenger pushing or pulling on the back of the front passenger's seat.
- The front seat or seat-back is forced back against an object on the seat or floor behind it.
- An object placed under the front passenger's seat.
- An object placed between the seat cushion and center console.

If the vehicle is moving please come to a stop when it is safe to do so. Check and correct any of the above conditions. Restart the vehicle and wait one minute.

NOTE:

A system check will be performed during which the passenger air bag status light will remain lit for about 7 seconds initially.

If the light is still OFF after this, the small adult, child or child restraint should be repositioned in the rear seat and the vehicle should be checked by a NISSAN dealer as soon as possible.

Other supplemental front-impact air bag precautions

⚠ WARNING

- **Do not place any objects on the steering wheel pad or on the instrument panel. Also, do not place any objects between any occupant and the steering wheel or instrument panel. Such objects may become dangerous projectiles and cause injury if the front air bags inflate.**
- **Immediately after inflation, several front air bag system components will be hot. Do not touch them; you may severely burn yourself.**
- **No unauthorized changes should be made to any components or wiring of the supplemental air bag system. This is to prevent accidental inflation of the supplemental air bag or damage to the supplemental air bag system.**
- **Do not make unauthorized changes to your vehicle's electrical system, suspension system or front end structure. This could affect proper operation of the front air bag system.**
- **Tampering with the front air bag system may result in serious personal injury. Tampering includes changes to the steering wheel and the instrument panel assembly by placing material over the steering wheel pad and above the instrument panel or by installing additional trim material around the air bag system.**
- **Removing or modifying the front passenger seat may affect the function of the air bag and result in serious personal injury.**
- **Modifying or tampering with the front passenger seat may result in serious personal injury. For example, do not change the front seats by placing material on the seat cushion or by installing additional trim material, such as seat covers, on the seat that are not specifically designed to assure proper air bag operation. Additionally, do not stow any objects under the front passenger seat or the seat cushion and seatback. Such objects may interfere with the proper operation of the occupant classification sensor (weight sensor).**
- **No unauthorized changes should be made to any components or wiring of the seat belt system. This may affect the front air bag system. Tampering with the seat belt system may result in serious personal injury.**
- **Work on and around the front air bag system should be done by a NISSAN dealer. Installation of electrical equipment should also be done by a NISSAN dealer. The Supplemental Restraint System (SRS) wiring harnesses* should not be modified or disconnected. Unauthorized electrical test equipment and probing devices should not be used on the air bag system.**
- **A cracked windshield should be replaced immediately by a qualified repair facility. A cracked windshield could affect the function of the supplemental air bag system.**

***The SRS wiring harness connectors are yellow and orange for easy identification.**

When selling your vehicle, we request that you inform the buyer about the front air bag system and guide the buyer to the appropriate sections in this Owner's Manual.

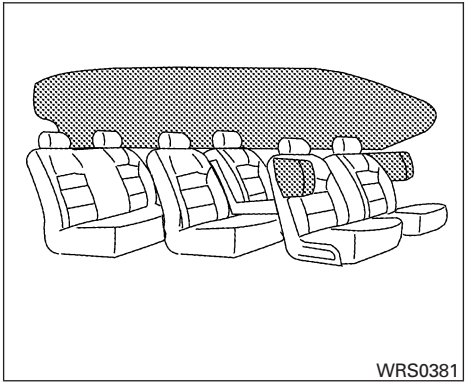

Front seat-mounted side-impact supplemental air bag and roof-mounted curtain side-impact and rollover supplemental air bag systems

The side air bags are located in the outside of the seatback of the front seats. The curtain air bags are located in the side roof rails in all three rows. **All of the information, cautions and warnings in this manual must be followed.** The side air bags and curtain air bags are designed to inflate in higher severity side collisions, although they may inflate if the forces in another type of collision are similar to those of a higher severity impact. They are designed to inflate on the side where the vehicle is impacted. They may not inflate in certain side collisions.

Curtain air bags are also designed to inflate in certain types of rollover collisions or near rollovers. As a result, certain vehicle movements (for example, during severe off-roading) may cause the curtain air bags to inflate.

Vehicle damage (or lack of it) is not always an indication of proper side air bag and curtain air bag operation.

When the side air bags and curtain air bags inflate, a fairly loud noise may be heard, followed by release of smoke. This smoke is not harmful and does not indicate a fire. Care should be taken not to inhale it, as it may cause irritation and choking. Those with a history of a breathing condition should get fresh air promptly.

Side air bags, along with the use of seat belts, help to cushion the impact force on the chest of the front occupants. Curtain air bags help to cushion the impact force to the head of occupants in the front and rear outboard seating positions in all rows. They can help save lives and reduce serious injuries. However, an inflating side air bag or curtain air bag may cause abrasions or other injuries. Side air bags and curtain air bags do not provide restraint to the lower body.

The seat belts should be correctly worn and the driver and passenger seated upright as far as practical away from the side air bag. Rear seat passengers should be seated as far away as practical from the door finishers and side roof rails. The side air bags and curtain air bags inflate quickly in order to help protect the occupants. Because of this, the force of the side air bags and curtain air bags inflating can increase the risk of injury if the occupant is too close to, or is against, these air bag modules during inflation. The side air bag will deflate quickly after the collision is over.

The curtain air bag will remain inflated for a short time.

The side air bags and curtain air bags operate only when the ignition switch is placed in the ON position.

After placing the ignition switch in the ON position, the supplemental air bag warning light illuminates. The supplemental air bag warning light will turn off after about 7 seconds if the system is operational.

⚠ WARNING

- **Do not place any objects near the seatback of the front seats. Also, do not place any objects (an umbrella, bag, etc.) between the front door finisher and the front seat. Such objects may become dangerous projectiles and cause injury if a side air bag inflates.**
- **Right after inflation, several side air bag and curtain air bag system components will be hot. Do not touch them; you may severely burn yourself.**
- **No unauthorized changes should be made to any components or wiring of the side air bag and curtain air bag systems. This is to prevent damage to or accidental inflation of the side air bag and curtain air bag systems.**
- **Do not make unauthorized changes to your vehicle's electrical system, suspension system or side panel. This could affect proper operation of the curtain air bag systems.**
- **Tampering with the side air bag system may result in serious personal injury. For example, do not change the front seats by placing material near the seatbacks or by installing additional trim material, such as seat covers, around the side air bag.**
- **Work around and on the side air bag and curtain air bag systems should be done by a NISSAN dealer. Installation of electrical equipment should also be done by a NISSAN dealer. The SRS wiring harnesses* should not be modified or disconnected. Unauthorized electrical test equipment and probing devices should not be used on the side air bag or curtain air bag systems.**

*** The SRS wiring harness or connectors are yellow or orange for easy identification.**

When selling your vehicle, we request that you inform the buyer about the side air bags and curtain air bag system and guide the buyer to the appropriate sections in this Owner's Manual.

Seat belts with pretensioners (front seats)

⚠ WARNING

- **If the vehicle becomes involved in a collision but a pretensioner is not activated, be sure to have the pretensioner system checked and, if necessary, replaced by your NISSAN dealer.**
- **No unauthorized changes should be made to any components or wiring of the pretensioner system. This is to prevent damage to or accidental activation of the pretensioners. Tampering with the pretensioner system may result in serious personal injury.**
- **Work around and on the pretensioner system should be done by a NISSAN dealer. Installation of electrical equipment should also be done by a NISSAN dealer. Unauthorized electrical test equipment and probing devices should not be used on the pretensioner system.**
- **If you need to dispose of a pretensioner or scrap the vehicle, contact a NISSAN dealer. Incorrect disposal procedures could cause personal injury.**

The pretensioner system may activate with the supplemental air bag system in certain types of collisions. Working with the seat belt retractor, the pretensioner helps tighten the seat belt when the vehicle becomes involved in certain types of collisions, helping to restrain front seat occupants.

The pretensioner is encased with the seat belt retractor. These seat belts are used the same way as conventional seat belts.

When a pretensioner activates, smoke is released and a loud noise may be heard. This smoke is not harmful and does not indicate a fire. Care should be taken not to inhale it, as it may cause irritation and choking. Those with a history of a breathing condition should get fresh air promptly.

After pretensioner activation, load limiters allow the seat belt to release webbing (if necessary) to reduce forces against the chest.

The supplemental air bag warning light is used to indicate malfunctions in the pretensioner system. For additional information, refer to "Supplemental air bag warning light" in this section. If the operation of the supplemental air bag warning light indicates there is a malfunction, have the system checked by a NISSAN dealer.

When selling your vehicle, we request that you inform the buyer about the pretensioner system and guide the buyer to the appropriate sections in this Owner's Manual.

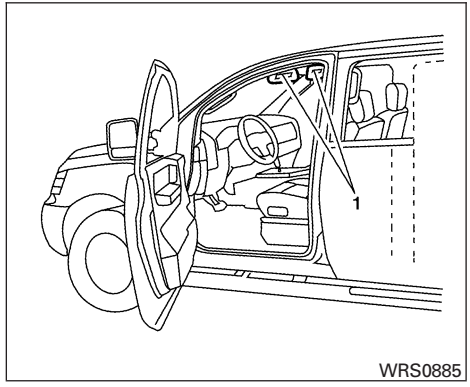

1. SRS Air Bag Warning Labels

   The warning labels are located on the surface of the sun visor.

SUPPLEMENTAL AIR BAG WARNING LABELS

Warning labels about the supplemental front-impact air bag system are placed in the vehicle as shown in the illustration.

SUPPLEMENTAL AIR BAG WARNING LIGHT

The supplemental air bag warning light, displaying in the instrument panel, monitors the circuits for the air bag systems, pretensioners and all related wiring.

When the ignition switch is placed in the ON position, the supplemental air bag warning light illuminates for about 7 seconds and then turns off. This means the system is operational.

If any of the following conditions occur, the front air bag, side air bag, curtain air bag and pretensioner systems need servicing:

- The supplemental air bag warning light remains on after approximately 7 seconds.
- The supplemental air bag warning light flashes intermittently.
- The supplemental air bag warning light does not come on at all.

Under these conditions, the front air bag, side air bag, curtain air bag or pretensioner systems may not operate properly. They must be checked and repaired. Take your vehicle to the nearest NISSAN dealer.

⚠ WARNING

If the supplemental air bag warning light is on, it could mean that the front air bag, side air bag, curtain air bag and/or pretensioner systems will not operate in an accident. To help avoid injury to yourself or others, have your vehicle checked by a NISSAN dealer as soon as possible.

Repair and replacement procedure

The front air bags, side air bags, curtain air bags and pretensioners are designed to inflate on a one-time-only basis. As a reminder, unless it is damaged, the supplemental air bag warning light remains illuminated after inflation has occurred. Repair and replacement of these supplemental air bag systems should be done only by a NISSAN dealer.

When maintenance work is required on the vehicle, the front air bags, side air bags, curtain air bags, pretensioners and related parts should be pointed out to the person performing the maintenance. The ignition switch should always be in the LOCK position when working under the hood or inside the vehicle.

⚠ WARNING

- **Once a front air bag, side air bag, or curtain air bag has inflated, the air bag module will not function again and must be replaced. Additionally, the activated pretensioners must also be replaced. The air bag module and pretensioner should be replaced by a NISSAN dealer. The air bag module and pretensioner cannot be repaired.**
- **The front air bag, side air bag, curtain air bag systems and the pretensioner system should be inspected by a NISSAN dealer if there is any damage to the front end or side portion of the vehicle.**
- **If you need to dispose of a supplemental air bag or pretensioner or scrap the vehicle, contact a NISSAN dealer. Incorrect disposal procedures could cause personal injury.**

MEMO

2 Instruments and controls

Instrument panel 2-2
Meters and gauges 2-3
Speedometer and odometer 2-4
Tachometer 2-5
Fuel gauge 2-5
Assist Charge Gauge 2-6
Compass display (if so equipped) 2-6
Zone variation change procedure 2-7
Warning/indicator lights and audible reminders 2-9
Checking bulbs 2-10
Warning lights 2-10
Indicator lights 2-15
Audible reminders 2-18
Vehicle Information Display 2-18
How to use the vehicle information display 2-19
Startup display 2-19
Settings 2-19
Vehicle information display warnings and indicators 2-27
Security systems 2-31
Vehicle security system 2-31
NISSAN vehicle immobilizer system 2-32
Windshield wiper and washer switch 2-33
Switch operation 2-34
Rear window wiper and washer switch 2-35
Rear window and outside mirror defroster switch 2-36
Headlight and turn signal switch 2-36
Headlight control switch 2-37
Daytime running light system (Canada only) 2-39
Instrument brightness control 2-39
Turn signal switch 2-39
Fog light switch 2-40
Horn 2-41
Heated seats (if so equipped) 2-41
Heated 2nd row seats (if so equipped) 2-42
Climate controlled seat switch (if so equipped) 2-43
Heated steering wheel (if so equipped) 2-44
Vehicle Dynamic Control (VDC) off switch 2-45
Power inverter switch (if so equipped) 2-45
Tow mode switch 2-46
Power outlets 2-46
12v outlets 2-46
120v outlet (if so equipped) 2-48
Storage 2-48
Map pockets 2-48
Seatback pocket 2-49

Glove box 2-49
Console box 2-49
Sunglasses holder 2-50
Cup holders 2-51
Storage tray 2-53
Luggage hooks 2-53
Cargo area storage bin 2-54
Roof rack 2-54
Windows 2-55
Power windows 2-55
Moonroof (if so equipped) 2-57
Power moonroof 2-57
Panoramic sunshade (if so equipped) 2-59
Interior light 2-61
Console light 2-61
Personal lights 2-62
Map lights 2-62
Cargo light 2-62
HomeLink® universal transceiver 2-63
Programming HomeLink® 2-64
Programming HomeLink® for Canadian customers and gate openers 2-65
Operating the HomeLink® universal transceiver 2-65
Programming trouble-diagnosis 2-66
Clearing the programmed information 2-66
Reprogramming a single HomeLink® button 2-66
If your vehicle is stolen 2-66

INSTRUMENT PANEL

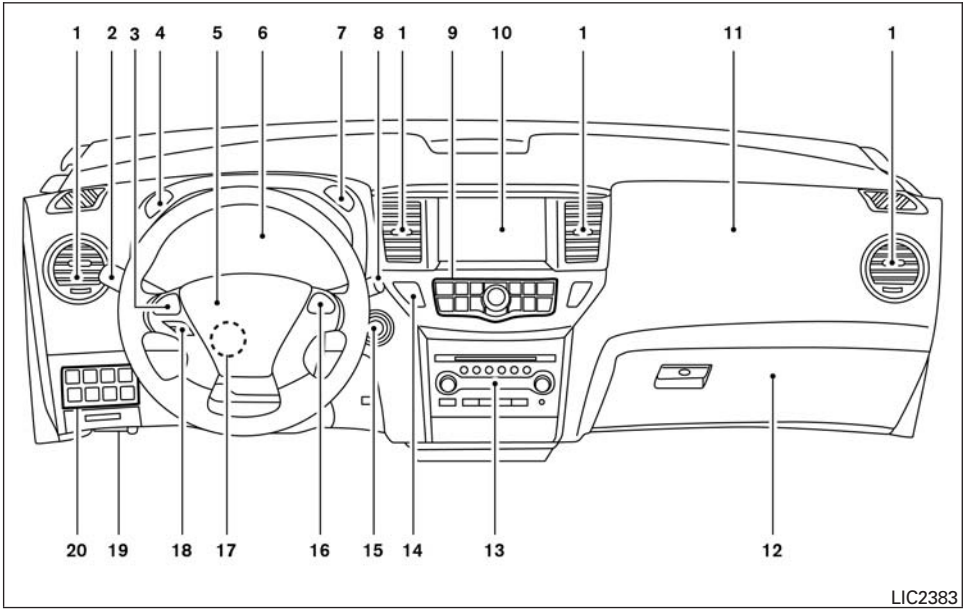

1. Vent (P. 4-41)
2. Headlight/fog light/turn signal switch (P. 2-36)
3. Control panel and Vehicle Information Display switches (P. 2-19)
4. Instrument brightness control (P. 2-39)
5. Driver supplemental air bag/Horn (P.1-47, P. 2-41)
6. Meters, gauges, warning/indicator lights and Vehicle Information Display (P. 2-3, 2-9, 2-19)
7. Twin trip odometer reset switch (P. 2-4)
8. Windshield wiper/washer switch and rear window wiper/washer switch (P. 2-33, P. 2-35)
9. Control panel with Navigation System/ Control panel without Navigation System (P. 4-10, 4-4)
10. Display screen (P. 4-10)
11. Front passenger supplemental air bag (P. 1-47)
12. Glove box (P. 2-49)
13. Audio system controls (P. 4-47)/ Automatic heater and air conditioning controls (P. 4-42)
14. Hazard warning flasher switch (P. 6-2)
15. Push-button ignition switch (P. 5-10)
16. Cruise control main/set switches (P. 5-31)
17. Tilt steering wheel control (P. 3-31)
18. Bluetooth® Hands-free Phone System (P. 4-109, 4-124)
19. Hood release (P. 3-22)

20. Vehicle Dynamic Control (VDC) OFF switch (P. 2-45)
    Tow mode switch (P. 2-46)
    Liftgate release switch (if so equipped) (P. 3-23)
    Heated steering wheel switch (if so equipped) (P. 2-44)
    Power inverter switch (if so equipped) (P. 2-45)
    Power liftgate main switch (if so equipped) (P. 3-23)
    Blind Spot Warning (if so equipped)/ Rear Cross Traffic Alert (if so equipped) switch (P. 5-19, 5-25)

*: Refer to the separate Navigation System Owner's Manual (if so equipped).

For additional information, refer to the page number indicated in parentheses for operating details.

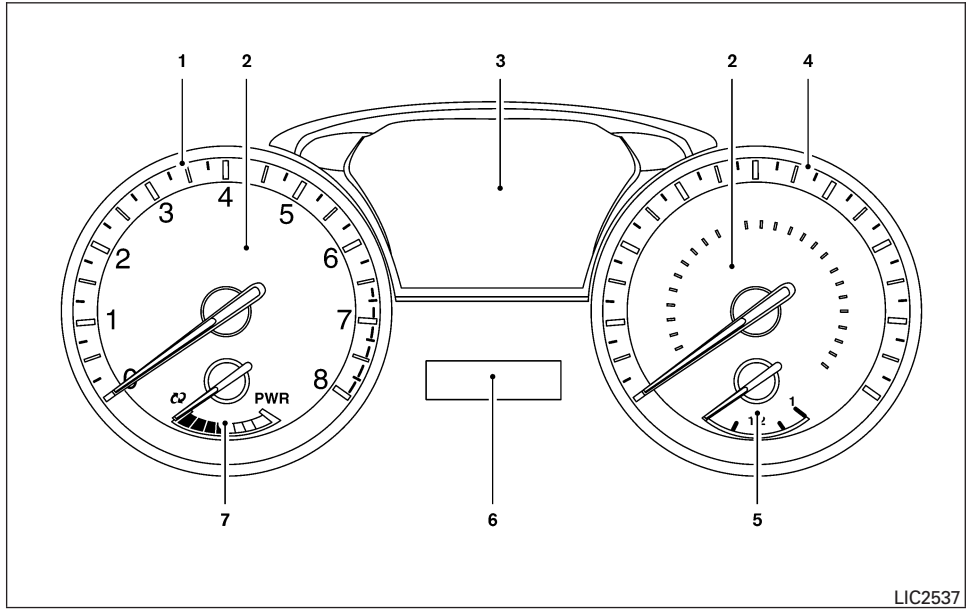

1. Tachometer
2. Warning/indicator lights
3. Vehicle Information Display
4. Speedometer
5. Fuel gauge
6. Odometer/Twin trip odometer
7. Assist Charge Gauge

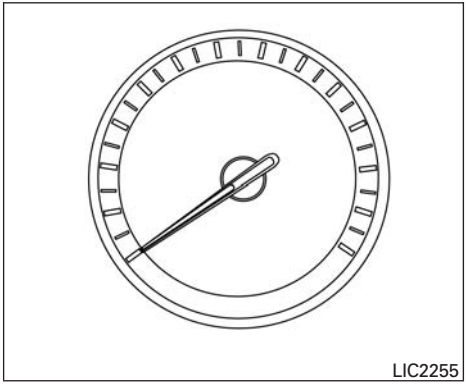

SPEEDOMETER AND ODOMETER

Speedometer

The speedometer indicates vehicle speed.

Odometer/Twin trip odometer

The odometer ① and the twin trip odometer ② are displayed below the Vehicle Information Display when the ignition switch is placed in the ON position.

The odometer records the total distance the vehicle has been driven.

The twin trip odometer records the distance of individual trips.

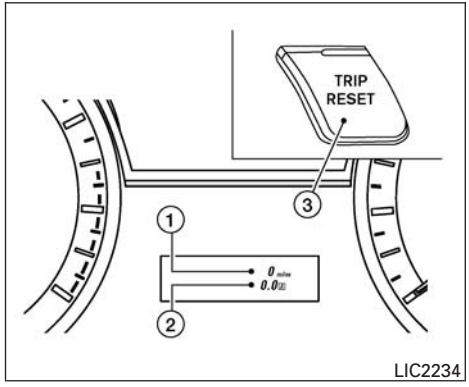

Changing the display:

Pushing the TRIP RESET ③ switch on the right of the instrument panel to change the display as follows:

Trip **A** → Trip **B** → Trip **A**

Resetting the trip odometer:

Pushing the TRIP RESET switch ③ for more than 1 second resets the currently displayed trip odometer to zero.

Average fuel economy and distance to empty information is also available. For additional information, refer to “Vehicle Information Display” in this section.

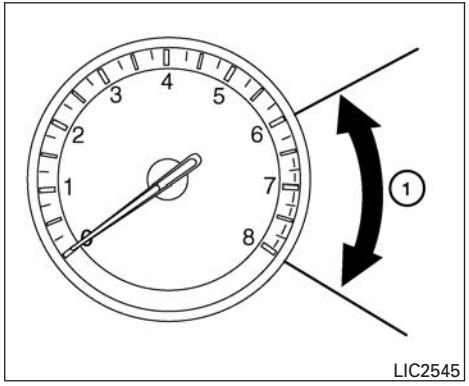

TACHOMETER

The tachometer indicates engine speed in revolutions per minute (rpm). Do not rev engine into the red zone ①.

⚠ CAUTION

When engine speed approaches the red zone, reduce engine speed. Operating the engine in the red zone may cause serious engine damage.

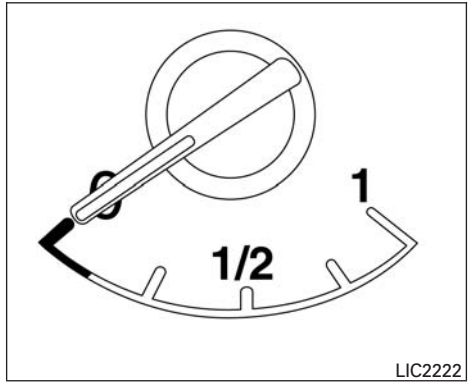

FUEL GAUGE

The gauge indicates the **approximate** fuel level in the tank.

The gauge may move slightly during braking, turning, acceleration, or going up or down hills.

The gauge needle returns to 0 (Empty) after the ignition switch is placed in the OFF position.

The low fuel warning light comes on when the amount of fuel in the tank is getting low.

Refill the fuel tank before the gauge registers 0 (Empty).

The ⛽ indicates that the fuel-filler door is located on the driver's side of the vehicle.

⚠ CAUTION

- **If the vehicle runs out of fuel, the Malfunction Indicator Light (MIL) may come on. Refuel as soon as possible. After a few driving trips. the light should turn off. If the light remains on after a few driving trips, have the vehicle inspected by a NISSAN dealer.**
- **For additional information, refer to "Malfunction Indicator Light (MIL)" in this section.**

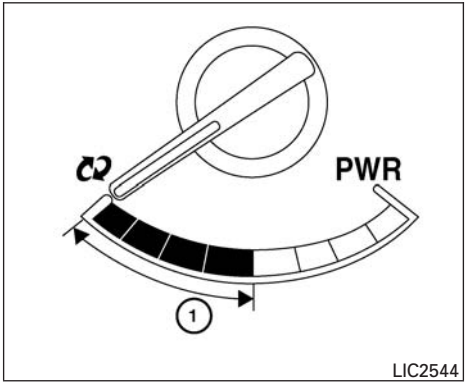

LIC2544

ASSIST CHARGE GAUGE

The Assist Charge Gauge indicates the condition of the electric motor. When the needle is between the center and “charge” (① range), this indicates that the electric motor is generating power to recharge the Li-ion battery.

When the needle is between the center and the PWR side, this indicates that the electric motor is powering the drive wheels and the Li-ion battery is discharging.

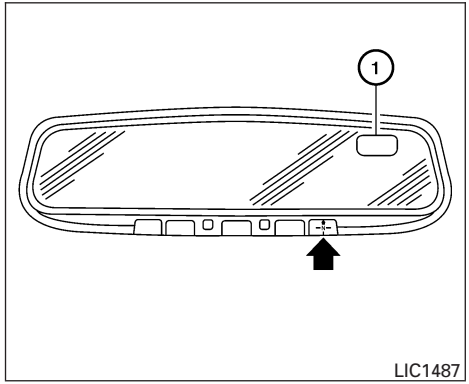

LIC1487

Push the button for about 1 second when the ignition switch is placed in the ON position to toggle the compass direction display ① on or off. The display will indicate the direction that the vehicle is heading.

N: North
E: East
S: South
W: West

If the display reads “C”, calibrate the compass by driving the vehicle in 3 complete circles at less than 5 MPH (8 km/h).

You can also calibrate the compass by driving your vehicle on your everyday route. The compass will be calibrated once it has tracked 3 complete circles.

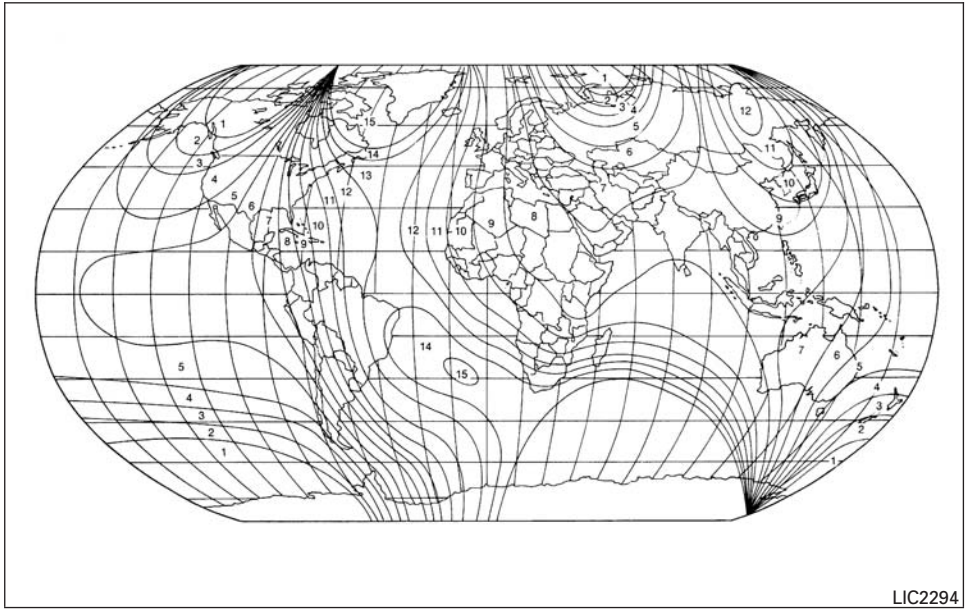

ZONE VARIATION CHANGE PROCEDURE

The difference between magnetic north and geographical north is known as variance. In some areas, this difference can sometimes be great enough to cause false compass readings. Follow these instructions to set the variance for your particular location if this happens:

1. Press and hold the button for about 11 seconds or the button for about 8 seconds. The current zone number will appear in the display. Release the button.
2. Find your current location on the zone map. Refer to the illustration.
3. Press the or the button repeatedly to toggle through the zone numbers until the desired number appears in the display. Once you have selected a zone number, the display will show a compass direction within a few seconds.

Inaccurate compass direction:

The compass display is equipped with automatic correction function. If the correct direction is not shown, follow this procedure.

1. With the display turned on, press and hold the button for about 13 seconds or the for about 10 seconds. The “C” icon in the compass display will illuminate.
2. Calibrate the compass by driving the vehicle in three complete circles at a maximum speed of 8 km/h (5 MPH).
3. After completing the circles, the display should return to normal.

⚠ CAUTION

- **Do not install a ski rack, antenna, etc., which are attached to the vehicle by means of a magnet. They affect the operation of the compass.**
- **When cleaning the mirror, use a paper towel or similar material dampened with glass cleaner. Do not spray glass cleaner directly on the mirror as it may cause the liquid cleaner to enter the mirror housing.**

WARNING/INDICATOR LIGHTS AND AUDIBLE REMINDERS

ABS	Anti-lock Braking System (ABS) warning light	PS	Power steering warning light	O/D OFF	Overdrive off indicator light
BRAKE or	Brake warning light		Seat belt warning light and chime		READY to drive indicator light
	12–volt battery charge warning light		Supplemental air bag warning light		Security indicator light
	Electronically controlled brake warning light (yellow)	EV	EV indicator light		Side light and headlight indicator light (green)
	Engine oil pressure warning light		Front fog light indicator light		Slip indicator light
	High temperature warning light	OFF	Front passenger air bag status light	TOW	Tow mode ON indicator light
	Pure Drive Hybrid™ system warning light		High beam indicator light (blue)		Turn signal/hazard indicator lights
	Low tire pressure warning light		Hill descent control system on indicator light (if so equipped)	OFF	Vehicle Dynamic Control (VDC) off indicator light
	Low windshield-washer fluid warning light		Low temperature indicator light		
	Master warning light		Malfunction Indicator Light (MIL)		

CHECKING BULBS

With all doors closed, apply the parking brake and place the ignition switch to the ON position without starting the engine. The following lights will come on:

, , , , PS , ,

The following lights (if equipped) come on briefly and then go off:

, , , , , O/D OFF ,

If any light fails to come on, it may indicate a burned-out bulb or an open circuit in the electrical system. Have the system repaired promptly.

WARNING LIGHTS

For additional information on warnings and indicators, refer to “Vehicle information display” in this section.

ABS Anti-lock Braking System (ABS) warning light

When the ignition switch is placed in the ON position, the Anti-lock Braking System (ABS) warning light illuminates and then turns off. This indicates the ABS is operational.

If the ABS light comes on while the hybrid system is running, it may indicate the anti-lock braking system is not functioning properly. Have the system checked by a NISSAN dealer.

If an ABS malfunction occurs, the anti-lock function is turned off. The brake system then operates normally, but without anti-lock assistance. For additional information, refer to “Brake system” in the “Starting and driving” section of this manual.

BRAKE or Brake warning light

This light functions for both the parking brake and the foot brake systems.

- Parking brake indicator
- Low brake fluid warning light
- Hydraulic brake system warning light

Parking brake indicator

When the ignition switch is placed in the ON position and the hybrid system is in the READY mode, the light comes on when the parking brake is applied.

Low brake fluid warning light

When the ignition switch is placed in the ON position and the hybrid system is in the READY mode, the light warns of a low brake fluid level. Check the brake fluid level. Add brake fluid as necessary. For additional information, refer to “Brake fluid” in the Maintenance and do-it-yourself” section of your NISSAN Owner’s Manual. If the brake fluid level is correct, refer to “Hydraulic brake system warning light” in this section.

Hydraulic brake system warning light

When the ignition switch is placed in the ON position and the hybrid system is in the READY mode, this light warns that the hydraulic brake system is not functioning properly. If the brake warning light comes on with the parking brake not applied when the hybrid system is in READY mode, perform the following:

1. Check the brake fluid level. Add brake fluid as necessary. For additional information, refer to “Brake fluid” in the Maintenance and do-it-yourself” section of this manual.
2. If the brake fluid level is correct, have the warning system checked by a NISSAN dealer.

If the hydraulic brake warning light comes on when the parking brake is not applied and the electronically controlled brake system warning light also comes on, stop the vehicle immediately and call a NISSAN dealer.

⚠ WARNING

- **Your brake system may not be working properly if the warning light is on. Driving could be dangerous. If you judge it to be safe, drive carefully to the nearest service station for repairs. Otherwise, have your vehicle towed because driving it could be dangerous.**
- **Pressing the brake pedal with the engine stopped and/or a low brake fluid level may increase your stopping distance and braking will require greater pedal effort as well as pedal travel.**
- **If the brake fluid level is below the MINIMUM or MIN mark on the brake fluid reservoir, do not drive until the brake system has been checked at a NISSAN dealer.**
- **Your brake system may not be working properly if both the brake warning light and electronically controlled brake system light come on when the hybrid system is in READY mode and the parking brake is not applied. Driving could be dangerous. If you judge it to be safe, drive carefully to the nearest service station for repairs. Otherwise, have your vehicle towed because driving it could be dangerous.**

12–volt battery charge warning light

If the light comes on when the READY indicator comes ON, it may indicate the charging system is not functioning properly. See a NISSAN dealer immediately.

⚠ CAUTION

The charging system may not be functioning properly if the 12–volt battery charge warning light comes on while the hybrid system is running. The hybrid system will stop operating when the 12–volt battery becomes discharged. Immediately stop the vehicle in a safe place and contact a NISSAN dealer.

Electronically controlled brake warning light (yellow)

When the ignition switch is placed in the ON position and the hybrid system is in the READY mode, the light stays on for about 2 seconds. If the light comes on at any other time, it may indicate the regenerative brake and/or the electronically controlled brake systems are not functioning properly. Have the system checked by a NISSAN dealer.

If the hydraulic brake warning light also comes on when the parking brake is not applied, stop the vehicle **immediately** and call a NISSAN dealer. For additional information, refer to “Brake system” in the “Starting and driving” section of this manual.

⚠WARNING

- **Your brake system may not be working properly if both the brake warning light and electronically controlled brake system light come on when the hybrid system is in READY mode and the parking brake is not applied. Driving could be dangerous. If you judge it to be safe, drive carefully to the nearest service station for repairs. Otherwise, have your vehicle towed because driving it could be dangerous.**

Engine oil pressure warning light

This light warns of low engine oil pressure. If the light flickers or comes on during normal driving, pull off the road in a safe area, stop the engine **immediately** and call a NISSAN dealer or other authorized repair shop.

The engine oil pressure warning light is not designed to indicate a low oil level. Use the dipstick to check the oil level. For additional information, refer to "Engine oil" in the "Maintenance and do-it-yourself" section of this manual.

⚠CAUTION

Running the engine with the engine oil pressure warning light on could cause serious damage to the engine almost immediately. Such damage is not covered by warranty. Turn off the engine as soon as it is safe to do so.

High temperature warning light

When the ignition switch is placed in the ON position, the high temperature warning light illuminates and then turns off. This indicates that the high temperature sensor in the engine coolant system is operational.

⚠CAUTION

If the high temperature warning light illuminates while the engine is running, it may indicate the engine temperature is extremely high. Stop the vehicle safely as soon as possible. If the vehicle is overheated, continuing vehicle operation may seriously damage the engine. For additional information, refer to "If your vehicle overheats" in the "In case of emergency" section.

Pure Drive Hybrid™ warning light

When the ignition switch is in the "ON" position, the hybrid system warning light illuminates. After starting the hybrid system, the hybrid system warning light turns off.
If the hybrid system warning light illuminates while driving, it may indicate that there is a malfunction in the electric motor and/or other hyrbrid system components.
Stop your vehicle immediately and contact an NISSAN dealer.

Low tire pressure warning light

Your vehicle is equipped with a TPMS that monitors the tire pressure of all tires except the spare.

The low tire pressure warning light warns of low tire pressure or indicates that the TPMS is not functioning properly.

After the ignition switch is placed in the ON position, this light illuminates for about 1 second and turns off.

Low tire pressure warning:

If the vehicle is being driven with low tire pressure, the warning light will illuminate. A "Tire Press Low - Add Air" warning also appears in the vehicle information display.

When the low tire pressure warning light illuminates, you should stop and adjust the tire pressure of all four tires to the recommended COLD tire pressure shown on the Tire and Loading Information label located in the driver's door opening. The low tire pressure warning light does not automatically turn off when the tire pressure is adjusted. After the tire is inflated to the recommended pressure, the vehicle must be driven at speeds above 16 MPH (25 km/h) to activate the TPMS and turn off the low tire pressure warning light. Use a tire pressure gauge to check the tire pressure.

The "Tire Press Low - Add Air" warning appears each time the ignition switch is placed in the ON position as long as the low tire pressure warning light remains illuminated.

For additional information, refer to "Vehicle information display" in the "Instruments and controls" section and "Tire Pressure Monitoring System (TPMS)" in the "Starting and driving" section and in the "In case of emergency" section of this mannual.

TPMS malfunction:

If the TPMS is not functioning properly, the low tire pressure warning light will flash for approximately 1 minute when the ignition switch is placed in the ON position. The light will remain on after the 1 minute. Have the system checked by a NISSAN dealer. The "Tire Pressure Low - Add Air" warning does not appear if the low tire pressure warning light illuminates to indicate a TPMS malfunction.

For additional information, refer to "Tire Pressure Monitoring System (TPMS)" in the "Starting and driving" section and "Tire pressure" in the "Maintenance and do-it-yourself" section of this manual.

⚠ WARNING

- **Radio waves could adversely affect electric medical equipment. Those who use a pacemaker should contact the electric medical equipment manufacturer for the possible influences before use.**
- **If the light does not illuminate with the ignition switch placed in the ON position, have the vehicle checked by a NISSAN dealer as soon as possible.**
- **If the light illuminates while driving, avoid sudden steering maneuvers or abrupt braking, reduce vehicle speed, pull off the road to a safe location and stop the vehicle as soon as possible. Driving with under-inflated tires may permanently damage the tires and increase the likelihood of tire failure. Serious vehicle damage could occur and may lead to an accident and could result in serious personal injury. Check the tire pressure for all four tires. Adjust the tire pressure to the recommended COLD tire pressure shown on the Tire and Loading Information label located in the driver's door opening to turn the low tire pressure warning light OFF. If the light still illuminates while driving after adjusting the tire pressure, a tire may be flat. If you have a flat tire, replace it with a spare tire as soon as possible.**
- **When a spare tire is mounted or a wheel is replaced tire pressure will not be indicated, the TPMS will not function and the low tire pressure warning light will flash for approximately 1 minute. The light will remain on after 1 minute. Contact your NISSAN dealer as soon as possible for tire replacement and/or system resetting.**

- **Replacing tires with those not originally specified by NISSAN could affect the proper operation of the TPMS.**

⚠CAUTION

- **The TPMS is not a substitute for the regular tire pressure check. Be sure to check the tire pressure regularly.**
- **If the vehicle is being driven at speeds of less than 16 MPH (25 km/h), the TPMS may not operate correctly.**
- **Be sure to install the specified size of tires to the 4 wheels correctly.**

Low windshield-washer fluid warning light

This light comes on when the windshield-washer fluid is at a low level. Add windshield-washer fluid as necessary. For additional information, refer to “Windshield-washer fluid” in the “Maintenance and do-it-yourself” section of this manual.

Master warning light

When the ignition switch is in the ON position, the master warning light illuminates if any of the following are displayed on the vehicle information display:

- No key warning
- Low fuel warning
- Low washer fluid warning
- Parking brake release warning
- Door open warning
- Loose fuel cap warning
- Check tire pressure warning

For additional information, refer to “Vehicle Information Display” in this section.

PS Power steering warning light

⚠WARNING

- **If the engine is not running or is turned off while driving, the power assist for the steering will not work. Steering will be harder to operate.**
- **When the power steering warning light illuminates with the engine running, there will be no power assist for the steering. You will still have control of the vehicle, but the steering will be much harder to operate. Have the power steering system checked by a NISSAN dealer.**

When the ignition switch is in the ON position, the power steering warning light illuminates. After starting the engine, the power steering warning light turns off. This indicates that the electric power steering system is operational. If the power steering warning light illuminates while the engine is running, it may indicate the power steering system is not functioning properly and may need servicing. Have the hydraulic pump electric power steering system checked by a NISSAN dealer. For additional information, refer to “Power steering” in the “Starting and driving” section of this manual.

Seat belt warning light and chime

The light and chime remind you to fasten your seat belts. The light illuminates whenever the ignition switch is placed in the ON or START position and remains illuminated until the driver’s seat belt is fastened. At the same time, the chime sounds for about 6 seconds unless the driver’s seat belt is securely fastened.

The seat belt warning light may also illuminate if the front passenger’s seat belt is not fastened when the front passenger’s seat is occupied . For 7 seconds after the ignition switch is placed in the ON position, the system does not activate the warning light for the front passenger.

For additional information, refer to “Seat belts” in the “Safety—Seats, seat belts and supplemental restraint system” section of this manual for precautions on seat belt usage.

Supplemental air bag warning light

When the ignition switch is placed in the ON or START position, the supplemental air bag warning light illuminates for about 7 seconds and then turns off. This means the system is operational.

If any of the following conditions occur, the front air bag, side air bag, curtain air bag, and pretensioner systems need servicing and your vehicle must be taken to a NISSAN dealer:

- The supplemental air bag warning light remains on after approximately 7 seconds.
- The supplemental air bag warning light flashes intermittently.
- The supplemental air bag warning light does not come on at all.

Unless checked and repaired, the supplemental restraint system (air bag system) and/or the seat belts with pretensioner system may not function properly. For additional information, refer to “Supplemental restraint system (SRS)” in the “Safety—Seats, seat belts and supplemental restraint system” section of this manual.

⚠ WARNING

If the supplemental air bag warning light is on, it could mean that the front air bag, side air bag, curtain air bag and/or pretensioner systems will not operate in an accident. To help avoid injury to yourself or others, have your vehicle checked by a NISSAN dealer as soon as possible.

INDICATOR LIGHTS

For additional information on warnings and indicators, refer to “Vehicle information display” in this section.

EV indicator light

This light illuminates when the engine stops running.

Front fog light indicator light

The front fog light indicator light illuminates when the front fog lights are ON. Refer to “Fog light switch” in this section.

Front passenger air bag status light

The front passenger air bag status light will be lit and the passenger front air bag will be OFF depending on how the front passenger seat is being used.

For front passenger air bag status light operation, refer to “Front passenger air bag and status light” in the “Safety — Seats, seat belts and supplemental restraint system” section of this manual.

High beam indicator light (blue)

This blue light comes on when the headlight high beams are on and goes out when the low beams are selected.

The high beam indicator light also comes on when the passing signal is activated.

Hill descent control system on indicator light (if so equipped)

When the ignition switch is placed in the ON position, this light comes on briefly and then turns off.

The light comes on when the hill descent control system is activated.

If the hill descent control switch is on and the indicator light blinks, the system is not engaged.

If the indicator light does not come on when the hill descent switch is on, the system may not be functioning properly. Have the system checked by a NISSAN dealer.

For additional information, refer to “Hill descent control system on indicator light” in this section and “Hill descent control system” in the “Starting and driving” section of this manual.

Low temperature indicator light (blue)

The low temperature indicator light illuminates when the engine coolant temperature is low.

When the ignition switch is placed in the ON position, the low temperature indicator light illuminates and then turns off after the engine coolant has warmed up.

If the low temperature indicator light stays illuminated after the engine has sufficiently warmed up, it may indicate the low temperature sensor in the engine coolant system is not functioning properly and may need servicing. Have the system checked, and if necessary repaired, by a NISSAN dealer promptly.

Malfunction Indicator Light (MIL)

If this indicator light comes on steady or blinks while the engine is running, it may indicate a potential emission control malfunction.

The MIL may also come on steady if the fuel-filler cap is loose or missing, or if the vehicle runs out of fuel. Check to make sure the fuel-filler cap is installed and closed tightly, and that the vehicle has at least 3 gallons (11.4 liters) of fuel in the fuel tank.

After a few driving trips, the light should turn off if no other potential emission control system malfunction exists.

If this indicator light comes on steady for 20 seconds and then blinks for 10 seconds when the engine is not running, it indicates that the vehicle is not ready for an emission control system inspection/maintenance test. For additional information, refer to “Readiness for inspection/maintenance (I/M) test” in the “Technical and consumer information” section of this manual.

Operation

The MIL will come on in one of two ways:

- MIL on steady — An emission control system malfunction has been detected. Check the fuel-filler cap if the LOOSE FUEL CAP warning appears in the vehicle information display. If the fuel-filler cap is loose or missing, tighten or install the cap and continue to drive the vehicle. The light should turn off after a few driving trips. If the light does not turn off after a few driving trips, have the vehicle inspected by a NISSAN dealer. You do not need to have your vehicle towed to the dealer.
- MIL blinking — An engine misfire has been detected which may damage the emission control system. To reduce or avoid emission control system damage:
  - do not drive at speeds above 45 MPH (72 km/h).
  - avoid hard acceleration or deceleration.
  - avoid steep uphill grades.
  - if possible, reduce the amount of cargo being hauled or towed.

The MIL may stop blinking and come on steady. Have the vehicle inspected by a NISSAN dealer. You do not need to have your vehicle towed to the dealer.

⚠ CAUTION

Continued vehicle operation without having the emission control system checked and repaired as necessary could lead to poor driveability, reduced fuel economy, and possible damage to the emission control system.

O/D OFF Overdrive OFF indicator light

The overdrive off indicator light illuminates when the overdrive off mode is selected.

For additional information, refer to “Continuously Variable Transmission (CVT)” in the “Starting and driving” section of this manual.

READY to drive indicator light

The READY to drive indicator light illuminates when the hybrid system is powered and the vehicle may be driven.

Security indicator light

This light blinks when the ignition switch is placed in the OFF, LOCK or ACC position.

The blinking security indicator light indicates that the security systems equipped on the vehicle are operational.

For additional information, refer to “Security systems” in this section.

Side light and headlight indicator light (green)

The side light and headlight indicator light illuminates when the side light or headlight position is selected. For additional information, refer to “Headlight and turn signal switch” in this section.

Slip indicator light

This indicator will blink when the VDC system is operating, thus alerting the driver to the fact that the road surface is slippery and the vehicle is nearing its traction limits.

You may feel or hear the system working; this is normal.

The light will blink for a few seconds after the VDC system stops limiting wheel spin.

The indicator light also comes on when you place the ignition switch in the ON position. The light will turn off after approximately 2 seconds if the system is operational. If the light does not come on have the system checked by a NISSAN dealer.

TOW Tow mode ON indicator light

This light comes on when the tow mode function is ON.

Turn signal/hazard indicator lights

The appropriate light flashes when the turn signal switch is activated.

Both lights flash when the hazard switch is turned on.

OFF Vehicle Dynamic Control (VDC) off indicator light

This indicator light comes on when the VDC off switch is pushed to OFF. This indicates the VDC system is not operating.

Push the VDC off switch again or restart the engine and the system will operate normally. For additional information, refer to “Vehicle Dynamic Control (VDC) system” in the “Starting and driving” section of this manual.

The VDC light also comes on when you place the ignition switch in the ON position. The light will turn off after about 2 seconds if the system is operational. If the light stays on or comes on along with the indicator light while you are driving, have the VDC system checked by a NISSAN dealer.

While the VDC system is operating, you might feel slight vibration or hear the system working when starting the vehicle or accelerating, but this is normal.

AUDIBLE REMINDERS

Brake pad wear warning

The disc brake pads have audible wear warnings. When a disc brake pad requires replacement, it makes a high pitched scraping sound when the vehicle is in motion, whether or not the brake pedal is depressed. Have the brakes checked as soon as possible if the warning sound is heard.

Key reminder chime

A chime sounds if the driver’s door is opened while the ignition switch is placed in the ACC or OFF position or placed in the OFF or LOCK position with the Intelligent Key left in the vehicle. Make sure the ignition switch is placed in the LOCK position, and take the Intelligent Key with you when leaving the vehicle.

Light reminder chime

With the ignition switch placed in the OFF position, a chime sounds when the driver’s door is opened if the headlights or parking lights are on.

Turn the headlight control switch off before leaving the vehicle.

NISSAN Intelligent Key® door buzzer

The Intelligent Key door buzzer sounds if the Intelligent Key is left inside the vehicle when locking the doors. When the buzzer sounds, be sure to check both the vehicle and the Intelligent Key. For additional information, refer to “NISSAN Intelligent Key®” in the “Pre-driving checks and adjustments” section of this manual.

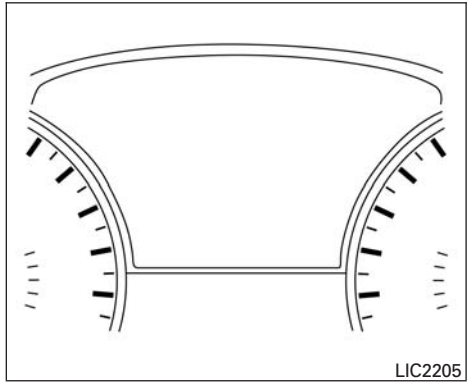

The vehicle information display is located to the left of the speedometer. It displays such items as:

- Vehicle settings
- HEV energy flow
- Trip computer information
- Drive system warnings and settings (if so equipped)
- Cruise control system information
- NISSAN Intelligent Key® operation information
- Indicators and warnings
- Tire pressure information

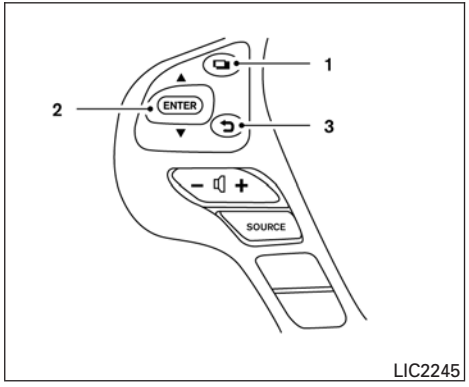

HOW TO USE THE VEHICLE INFORMATION DISPLAY

The vehicle information display can be changed using the buttons ❑ and ENTER located on the steering wheel.

1. ❑ — select/enter the Vehicle information menu items or to change from one display screen to the next (i.e. trip, TPMS, Fuel economy)
2. ▲▼ — navigate through the items in vehicle information
   ENTER — change or select an item in the vehicle information display
3. ↩ — go back to the previous menu

The ENTER and ▲▼ buttons also control audio and control panel functions. For additional information, refer to “Steering wheel switch for audio control” in the “Monitor, climate, audio, phone and voice recognition systems” section of this manual.

STARTUP DISPLAY

When the vehicle in placed in the ON or ACC position the screens that display in the vehicle information include:

- Active system status (if so equipped)
- Trip computer
- Tire pressure information
- 4 x 4 (if so equipped)
- Fuel economy
- Warnings

Warnings will only display if there are any present, for additional information, refer to “Vehicle information display warnings and indicators” regarding warnings and indicators in this section.

To control what items display in the vehicle information display, refer to “Main menu selection” in this section.

SETTINGS

The setting mode allows you to change the information displayed in the vehicle information display:

- Parking Aids (if so equipped)
- Vehicle Settings
- Main Menu Selection
- Body Color
- Maintenance
- Alarms
- Language
- Unit
- Welcome Effects
- Factory Reset

Parking Aids (if so equipped)

To turn on or off the system displayed in the “Parking Aids” menu use the ▲▼ button to select and the ENTER button.

For additional information, refer to “RearView Monitor” in the “Monitor, climate, audio, phone and voice recognition systems” section.

Vehicle Settings

The vehicle settings allows the customer to change settings for interior lights, intelligent key settings, unlock settings and other vehicle settings.

The vehicle settings can be changed using the ❑ , ▲▼ , and the ENTER buttons.

Welcome light (if so equipped)

The welcome light can be set to be ON or OFF. From the Vehicle Settings menu, select “Welcome Light”. Use the ENTER button to turn this feature ON or OFF.

Auto Room Lamp

The interior lights can be set to be ON or OFF if any door is unlocked. From the Vehicle Settings menu, select “Auto Room Light”. Use the ENTER button to turn this feature ON or OFF.

Light Sensitivity (if so equipped)

The light sensitivity can be set to illuminate earlier based on the brightness outside the vehicle. From the Vehicle Settings menu, select “Light Sensitivity”. Use the ENTER button to change the sensitivity.

Light Off Delay (if so equipped)

The duration of the automatic headlights can be changed from 0 to 180 seconds. From the Vehicle Settings menu, select “Light Off Delay”. Use the ENTER button to change the duration.

Wiper with Speed

The wiper with speed can be set to be ON or OFF. From the Vehicle Settings menu, select “Wiper with Speed”. Use the ENTER button to turn this feature ON or OFF.

I-Key Door Lock

When this item is turned on, the request switch on the door is activated. From the Vehicle Settings menu, select “I-Key Door Unlock”. Use the ENTER button to activate this function.

Selective-Unlock

When this item is turned on, only the driver’s door is unlocked first after the door unlock operation. When the door handle request switch on the driver’s or front passenger’s side door is pushed to be unlocked, only the corresponding door is unlocked first. All the doors can be unlocked if the door unlock operation is performed again within 1 minute. When this item is turned to OFF, all the doors will be unlocked after the door unlock operation is performed once. From the Vehicle Settings menu, select “Selective Unlock”. Use the ENTER button to activate this function.

Auto Door Unlock

The auto door unlock function automatically unlocks all the doors when the shift lever is placed in the P (Park) position. From the Vehicle Settings menu, select “Auto Door Unlock”. Use the ENTER button to enable/disable this function.

Answer back horn

When the answer back horn is on, the horn will chirp and the hazard indicators will flash once when locking the vehicle with the Intelligent Key.

Remote Start (if so equipped)

The remote start function can be turned on or off. If the setting is OFF the vehicle cannot be started using the Intelligent Key. From the Vehicle Settings menu, select “Remote Start”. Use the ENTER button to enable/disable.

Battery Saver

The battery saver automatically turns off the ignition after a period of time when the ignition switch is left in the ACC or ON position.

Exit Seat Slide (if so equipped)

When the exit seat slide is ON the driver's seat will move backward for easy exit when the ignition switch is placed in the OFF position and the driver's door is opened.

After getting into the vehicle and placing the ignition switch in the ACC position, the driver's seat will move to the previous set position. For additional information, refer to "Automatic drive positioner" in the "Pre-driving checks and adjustments" section of this manual regarding setting the seat position. Use the ENTER button to enable/disable this function.

Exit steering up (if so equipped)

When the exit steering up feature is turned ON, the steering wheel moves upward for easy exit when the ignition switch is in the OFF position and the driver's door is opened.

After getting into the vehicle and placing the ignition switch in the ACC position, the steering wheel moves to the previous position. For additional information, refer to "Tilt and telescopic operation" in the "Pre-driving checks and adjustments" section of this manual regarding setting the steering wheel position . Use the ENTER button to enable/disable this function.

Main Menu Selection

The items that display can be enabled/disabled when the ignition switch is placed in the ON position. To change the items that display.

Use the ▲▼ button to select and the ENTER button to change a menu item:

- Trip Computer
- Energy Flow
- Fuel Economy
- 4WD (if so equipped)
- Tire Pressures
- Engine Temperature

Trip Computer

The trip computer can be enabled/disabled to display in the vehicle information display when the ignition switch is placed in the ON position.

From the "Main Menu Selection" select "Trip Computer" to display in the vehicle information display when the ignition is placed in the ON position.

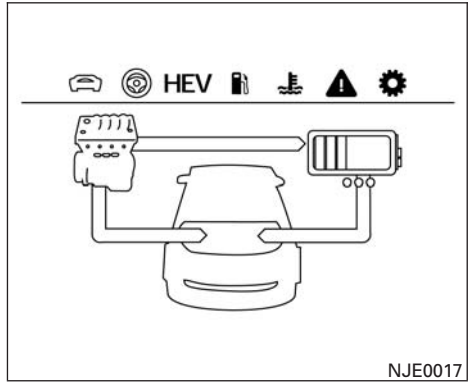

Energy flow

The energy flow can be enabled/disabled to display in the vehicle information display when the ignition switch is placed in the ON position.

From the "Main Menu Selection" select "Energy Flow" to display the energy flow information when the ignition switch is placed in the ON position.

Fuel Economy

The fuel economy can be enabled/disabled to display in the vehicle information display when the ignition switch is placed in the ON position.

From the “Main Menu Selection” select “Fuel Economy” to display in the vehicle information display when the ignition is placed in the ON position.

4WD (if so equipped)

The 4WD can be enabled/disabled to display in the vehicle information display when the ignition switch is placed in the ON position.

From the “Main Menu Selection” select “4WD” to display the 4WD information when the ignition switch is placed in the ON position.

Tire Pressures

The tire pressures can be enabled/disabled to display in the vehicle information display when the ignition switch is placed in the ON position.

From the “Main Menu Selection” select “Tire Pressures” to display in the vehicle information display when the ignition is placed in the ON position.

Engine Temperature

The engine temperature can be enabled/disabled to display in the vehicle information display when the ignition switch is placed in the ON position.

From the “Main Menu Selection” select “Engine Temp” to display the engine temperature information when the ignition switch is placed in the ON position.

Body Color

The color of the vehicle that displays in the vehicle information display when the ignition switch is placed in the ON position can be changed.

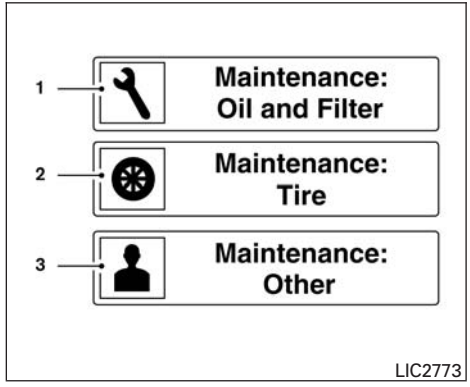

1. scheduled service: oil and oil filter
2. tires
3. other

Maintenance

The maintenance mode allows you to set alerts for the reminding of maintenance intervals. To change an item:

1. Press the ❑ button.
2. Use the ▲▼ button until “Settings” is selected, and press ENTER.

3. Select “Maintenance” using the button and press ENTER.

Oil and Filter

This indicator appears when the customer set distance comes for changing the engine oil and filter. You can set or reset the distance for checking or replacing these items. For scheduled maintenance items and intervals, refer to your “NISSAN Service and Maintenance Guide.”

Tire

This indicator appears when the customer set distance is reached for replacing tires. You can set or reset the distance for replacing tires.

WARNING

The tire replacement indicator is not a substitute for regular tire checks, including tire pressure checks. For additional information, refer to “Changing Wheels and Tires” in “Maintenance & Do- It-Yourself” section of this manual. Many factors including tire inflation, alignment, driving habits and road conditions affect tire wear and when tires should be replaced. Setting the tire replacement indicator for a certain driving distance does not mean your tires will last that long. Use the tire replacement indicator as a guide only and always perform regular tire checks. Failure to perform regular tire checks, including tire pressure checks could result in tire failure. Serious vehicle damage could occur and may lead to a collision, which could result in serious personal injury or death.

Other

This indicator appears when the customer set distance is reached for checking or replacing maintenance items other than the engine oil, oil filter and tires. Other maintenance items can include such things as air filter or tire rotation. The distance for checking or replacing the items can be set or reset.

Alarms

This setting allows the customer to set alarms for outside temperature and a timer alert.

1. Press the button.
2. Use the button until “Settings” is selected, and press ENTER.
3. Select “Alarms” using the button and press ENTER.

Outside Temperature

This setting allows the customer to enable/disable the alert for low outside temperature in the vehicle information display.

1. Use the button to select “Outside Temperature”.
2. Press the ENTER button to turn ON/OFF the outside temperature in the vehicle information display.

Timer Alert

This setting allows the driver to set an alert to notify a set time has been reached.

1. Use the button to select “Timer Alert”.
2. Press the ENTER button.

3. To change the timer amount, use the ▲▼ button and the ENTER button to save the selected time amount.

Language

The language of the vehicle information display can be changed to:

- US English
- French
- Spanish

Use the ❑ , ▲▼ , and the ENTER buttons to select and change the language of the vehicle information display. The language of the center display/navigation can be changed independently of the vehicle information display. For vehicles not equipped with Navigation refer to "How to use the SETTING button" for vehicles equipped with Navigation in the "System" in the "Monitor, climate, audio, phone and voice recognition systems" section of this manual.

Units

The units that are shown in the vehicle information display can be changed:

- Mileage
- Tire pressures
- Temperature

Use the ❑ , ▲▼ , and the ENTER buttons to select and change the units of the vehicle information display. The units of the navigation screen can be changed independently of the vehicle information display. For vehicles equipped with Navigation, refer to "System" in the "Monitor, climate, audio, phone and voice recognition systems" section of this manual.

Mileage

The unit for the mileage that displays in the vehicle information display can be changed to:

- miles, MPG, Inch
- km/h, l/100km, cm
- km/h, km/l, cm

Use the ▲▼ and the ENTER buttons to select and change the unit.

Tire Pressures

The unit for tire pressure that displays in the vehicle information display can be changed to:

- psi
- kPa
- bar
- Kgf/cm^2

Use the ▲▼ and the ENTER buttons to select and change the unit.

Temperature

The temperature that displays in the vehicle information display can be changed from:

- °F (Fahrenheit)
- °C (Celsius)

Use the ENTER button to toggle choices.

Welcome Effects

The welcome screen display can be turned ON/OFF to display when the ignition switch is placed in the ACC or ON position. To enable/disable the welcome screen:

1. Press the ❑ button.
2. Use the ▲▼ buttons to select "Settings", and press ENTER.
3. Select "Welcome Effects" using the ▲▼ buttons and press ENTER to turn this function ON or OFF.

Factory Reset

The settings in the vehicle information display can be reset back to the factory default. To reset the vehicle information display:

1. Press the ❑ button.
2. Use the ▲▼ buttons to select “Settings”, and press the ENTER button.
3. Select “Factory Reset” using the ▲▼ buttons and press the ENTER button.
4. Select “YES” to return all settings back to default by pressing the ENTER button.

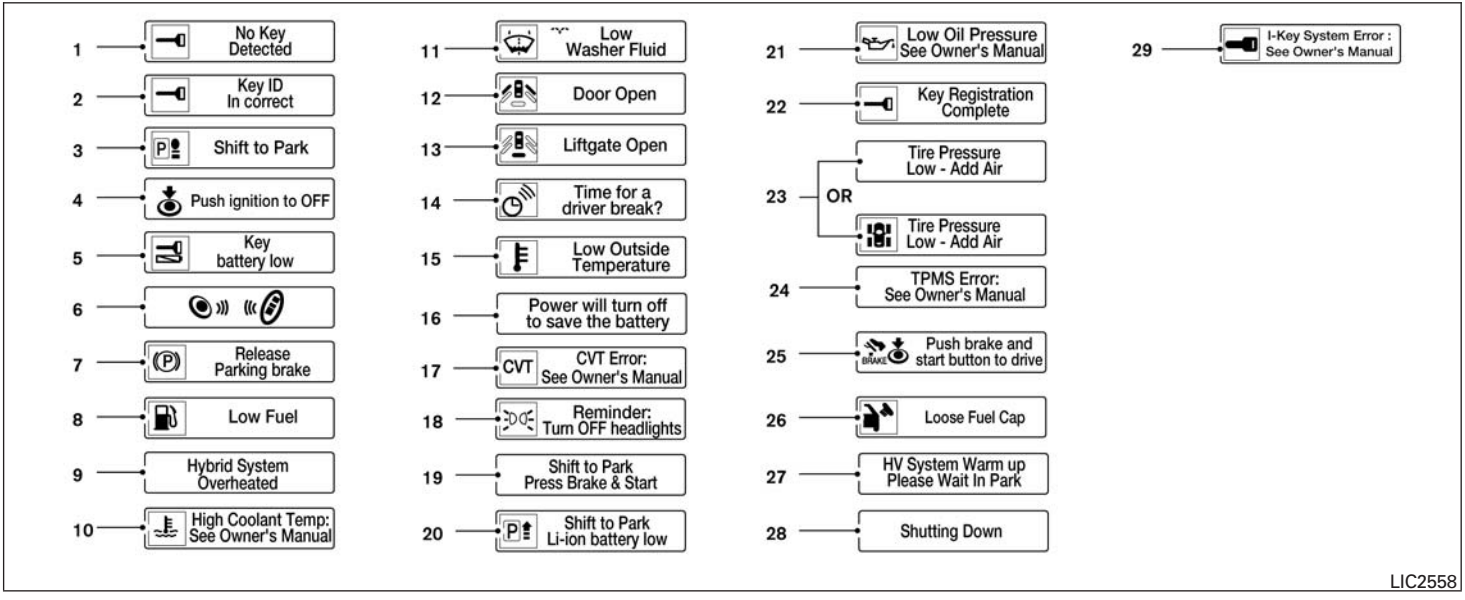
1 No Key Detected
2 Key ID In correct
3 Shift to Park
4 Push ignition to OFF
5 Key battery low
6
7 Release Parking brake
8 Low Fuel
9 Hybrid System Overheated
10 High Coolant Temp: See Owner's Manual
11 Low Washer Fluid
12 Door Open
13 Liftgate Open
14 Time for a driver break?
15 Low Outside Temperature
16 Power will turn off to save the battery
17 CVT Error: See Owner's Manual
18 Reminder: Turn OFF headlights
19 Shift to Park Press Brake & Start
20 Shift to Park Li-ion battery low
21 Low Oil Pressure See Owner's Manual
22 Key Registration Complete
23 Tire Pressure Low - Add Air
OR
Tire Pressure Low - Add Air
24 TPMS Error: See Owner's Manual
25 Push brake and start button to drive
26 Loose Fuel Cap
27 HV System Warm up Please Wait In Park
28 Shutting Down
29 I-Key System Error : See Owner's Manual
LIC2558

VEHICLE INFORMATION DISPLAY WARNINGS AND INDICATORS

1. No Key Detected
2. Key ID Incorrect
3. Shift to Park
4. Push ignition to OFF
5. Key battery low (if so equipped)
6. Engine start operation for Intelligent Key system
7. Release parking brake
8. Low Fuel
9. Hybrid System Overheated
10. High Coolant Temp: See Owners Manual
11. Low Washer Fluid
12. Door Open
13. Liftgate Open
14. Timer Alert – Time for a driver break?
15. Low Outside Temperature
16. Power will turn off to save the battery
17. CVT Error: See Owner's Manual
18. Reminder: Turn OFF headlights
19. Shift to Park Press Brake & Start
20. Shift to Park Li-ion battery low
21. Low Oil Pressure
22. Key Registration Complete
23. Tire Pressure Low - Add Air
24. TPMS Error
25. Remote Start (if so equipped)
26. Loose Fuel Cap
27. HV System Warm up Please Wait In Park
28. Shutting Down
29. I-Key System Error: See Owners Manual

No Key Detected

This warning appears when the Intelligent Key is left outside the vehicle with the ignition switch in the ON or ACC position. Make sure the Intelligent Key is inside the vehicle.

Key ID Incorrect

This warning appears when the ignition switch is placed from the OFF position and the Intelligent Key is not recognized by the system. You cannot start the engine with an unregistered key.

For additional information, refer to "NISSAN Intelligent Key®" in the "Pre-driving checks and adjustments" section of this manual.

Shift to Park warning

This will be displayed in the following conditions:

- When the shift lever is in any position except P (Park) and the push button ignition switch has been placed in the "OFF" position from the "ON" position.
- When the shift lever is operated while the READY to drive indicator light is flashing.
- The driver's door is opened with the shift lever in N, D or R.
- When the vehicle cannot be driven because the hybrid system temperature has become too high.
- The Lithium-ion (Li-ion) battery drops because the shift lever is in the N position.
- If a malfunction occurs in a situation other than those described above and the engine cannot start automatically.

When this warning appears, place the shift lever in the P (Park) position. When the shift “P” warning appears, a buzzer will sound.
This will turn off in the following conditions:

- When the shift lever has been placed in the P (Park) position.
- When the push button ignition switch has been pushed to “ON”.

Push ignition to OFF

After the Push ignition to OFF warning illuminates, the warning will illuminate if the ignition switch is placed in the ACC position when the shift lever is moved to the P (Park) position.

To turn off the Push warning, place the ignition switch in the ON position and then in the LOCK position.

Key Battery Low (if so equipped)

This indicator illuminates when the Intelligent Key battery is running out of power.

If this indicator illuminates, replace the battery with a new one. For additional information, refer to “Battery replacement” in the “Maintenance and do-it-yourself” section of this manual.

Engine start operation for Intelligent Key system

This indicator appears when the battery of the Intelligent Key is low and when the Intelligent Key system and the vehicle are not communicating normally.

If this appears, touch the ignition switch with the Intelligent Key while depressing the brake pedal. For additional information, refer to “NISSAN Intelligent Key® battery discharge” in the “Starting and driving” section of this manual.

Release Parking Brake

This warning illuminates in the message area of the vehicle information display when the parking brake is set and the vehicle is driven.

Low Fuel

This warning illuminates when the fuel level in the fuel tank is getting low. Refuel as soon as it is convenient, preferably before the fuel gauge reaches 0 (Empty). **There will be a small reserve of fuel in the tank when the fuel gauge needle reaches 0 (Empty).**

Hybrid System Overheated

This warning appears when the temperature of the hybrid system is extremely high. Stop the vehicle in a safe location as soon as possible. Avoid quick starting or abrupt acceleration. When the warning turns off, the vehicle can be driven.

If the warning appears again soon after it turns off, have the vehicle checked by a NISSAN dealer.

Do not drive the vehicle with the warning on. Doing so could cause a hybrid system malfunction.

⚠ WARNING

If you continue to drive the vehicle while the warning is displayed, the hybrid system may become temporarily inoperative and the system can not provide power to the wheels. This can result in reduced or zero vehicle speed. The reduced speed or zero speed may be lower than other traffic, which could increase the chance of a collision. If the vehicle cannot maintain a safe driving speed, pull to the side of the road in a safe area. If this occurs, place the shift lever in the “P” position, ignition in the READY position with the vehicle stopped until the display turns off. The Hybrid system overheat warning and the SHIFT “P” warning messages will be alternately displayed. For additional information, refer to “Shift to Park” in this section.

High Coolant Temp: See Owners Manual

This warning appears when the temperature of the engine coolant is too high. Stop the vehicle in a safe location as soon as possible. Avoid quick starting or abrupt acceleration. When the warning turns off, the vehicle can be driven.

If the warning appears again soon after it turns off, have the vehicle checked by an NISSAN dealer.

Low Washer Fluid

This warning illuminates when the windshield-washer fluid is at a low level. Add windshield-washer fluid as necessary. For additional information, refer to "Windshield-washer fluid" in the "Maintenance and do-it-yourself" section of this manual.

Door/liftgate Open

This warning illuminates when a door has been opened when the engine is running.

Boot (liftgate) Open

This warning illuminates when the liftgate has been opened when the engine is running.

Timer Alert – Time for a driver break?

This indicator appears when the set time is reached. The time can be set up to 6 hours. For setting the timer, refer to "Timer alert" in this section.

Low Outside Temperature

This warning appears if the outside temperature is below 37°F (3°C). The temperature can be changed to display in Celsius or Fahrenheit. For additional information, refer to "Temperature" in this section.

Power will turn off to save the battery

This warning appears in message area of the vehicle information display after a period of time if the shift lever has not moved from the P (Park) position.

CVT Error: See Owner's Manual

This warning illuminates when the there is a problem with the CVT system. If this warning comes on, have the system checked by a NISSAN dealer.

Reminder: Turn OFF headlights

This warning appears when the headlights are left in the ON position when exiting the vehicle. Place the headlight switch in the OFF or AUTO position. For additional information, refer to "Headlight and turn signal switch" in this section.

Shift to Park Press Brake & Start

This warning appears in the vehicle information display before the vehicle has been started due to a low battery state of charge. To start the vehicle, move the shift lever to the "P" (Park) position and apply the brake. Push the ignition switch to the ON position.

Shift to Park Li-ion battery low

This message appears when the Li-ion battery is getting low. To charge the Li-ion battery, place the shift lever in the "P" (Park). After the engine is started, this message disappears.

Low Oil Pressure

This warning appears in message area of the vehicle information display if low oil pressure is detected. This gauge is not designed to indicate low oil level. **The low oil pressure warning is not designed to indicate a low oil level.** Use the dipstick to check the oil level. For additional information, refer to "Engine oil" in the "Maintenance and do-it-yourself" section of this manual.

Key registration complete

This appears when a new Intelligent Key is registered to the vehicle.

Tire Pressure Low - Add Air warning

This warning appears when the low tire pressure warning light in the meter illuminates and low tire pressure is detected. The warning appears each time the ignition switch is placed in the ON position as long as the low tire pressure warning light remains illuminated. If this warning appears, stop the vehicle and adjust the tire pressures of all four tires to the recommended COLD tire pressure shown on the Tire and Loading Information label. For additional information, refer to “Low tire pressure warning light” in this section and “Tire Pressure Monitoring System (TPMS)” in the “Starting and driving” section of this manual.

TPMS Error: See Owner’s Manual

This warning appears when there is an error with your TPMS. If this warning comes on, have the system checked by a NISSAN dealer.

Push to start

This warning appears in the vehicle information display when the vehicle has been started using the remote start function. To start the vehicle, apply the brake and place the ignition switch in the ON position.

Loose Fuel Cap

This warning appears when the fuel-filler cap is not tightened correctly after the vehicle has been refueled. For additional information, refer to “Fuel-filler cap” in the “Pre-driving checks and adjustments” section of this manual.

HV System Warm Up Please Wait In Park

This warning appears when the Hybrid System has not reached full operating temperature. When the warning turns off, the vehicle can be driven.

Shutting Down

This warning appears when the Hybrid System has been turned off. This warning also may appear when the ignition is turned off, however, this is not a malfunction of the system.

I-Key System Error: See Owner’s Manual (if so equipped)

After the ignition switch is pushed to the ON position, this light comes on for about 2 seconds and then turns off.

The I-Key System Error message warns of a malfunction with the Intelligent Key system. If the light comes on while the engine is stopped, it may be impossible to start the engine.

If the light comes on while the engine is running, you can drive the vehicle. However in these cases, contact a NISSAN dealer for repair as soon as possible.

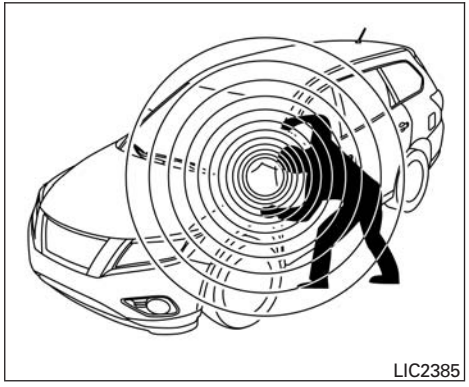
LIC2385

Your vehicle may have two types of security systems:

- Vehicle security system
- NISSAN Vehicle Immobilizer System

VEHICLE SECURITY SYSTEM

The vehicle security system provides visual and audible alarm signals if someone opens the doors, trunk lid or the hood when the system is armed. It is not, however, a motion detection type system that activates when a vehicle is moved or when a vibration occurs.

The system helps deter vehicle theft but cannot prevent it, nor can it prevent the theft of interior or exterior vehicle components in all situations. Always secure your vehicle even if parking for a brief period. Never leave your Intelligent Key in the vehicle, and always lock the vehicle when unattended. Be aware of your surroundings, and park in secure, well-lit areas whenever possible.

Many devices offering additional protection, such as component locks, identification markers, and tracking systems, are available at auto supply stores and specialty shops. Your NISSAN dealer may also offer such equipment. Check with your insurance company to see if you may be eligible for discounts for various theft protection features.

How to arm the vehicle security system

1. Close all windows. **(The system can be armed even if the windows are open.)**
2. Remove the Intelligent Key from the vehicle.
3. Close all doors, hood and trunk/liftgate. Lock all doors. The doors can be locked with the Intelligent Key, door handle request switch (if so equipped), power door lock switch or mechanical key.
4. Confirm that the security indicator light comes on. The security light stays on for about 30 seconds. The vehicle security system is now pre-armed. After about 30 seconds the vehicle security system automatically shifts into the armed phase. The security light begins to flash once every 3 seconds. If, during the 30-second pre-arm time period, the driver's door is unlocked by the key or the key fob, or the ignition switch is placed in the ACC or ON position, the system will not arm.

- **Even when the driver and/or passengers are in the vehicle, the system will activate with all the doors, hood and trunk lid locked with the ignition switch placed in the LOCK position. When placing the ignition switch in the ACC or ON position, the system will be released.**

Vehicle security system activation

The vehicle security system will give the following alarm:

- The headlights blink and the horn sounds intermittently.
- The alarm automatically turns off after a period of time. However, the alarm reactivates if the vehicle is tampered with again. The alarm can be shut off by unlocking the driver's door with the key, or by pressing the button on the Intelligent Key.

The alarm is activated by:

- opening the door or hood without using the key or Intelligent Key (even if the door is unlocked by releasing the door inside lock switch).

How to stop an activated alarm

The alarm stops only by unlocking the driver's door or the trunk/liftgate with the key, pressing the button on the Intelligent Key, or pressing the request switch on the driver's or passenger's door with the Intelligent Key in range of the door handle.

NISSAN VEHICLE IMMOBILIZER SYSTEM

The NISSAN Vehicle Immobilizer System will not allow the engine to start without the use of a registered key.

Never leave these keys in the vehicle.

FCC Notice:

For USA:

This device complies with part 15 of the FCC Rules. Operation is subject to the following two conditions: (1) This device may not cause harmful interference, and (2) this device must accept any interference received, including interference that may cause undesired operation.

NOTE:

Changes or modifications not expressly approved by the party responsible for compliance could void the user's authority to operate the equipment.

For Canada:

This device complies with Industry Canada licence-exempt RSS standard(s). Operation is subject to the following two conditions: (1) this device may not cause interference, and (2) this device must accept any interference, including interference that may cause undesired operation of the device.

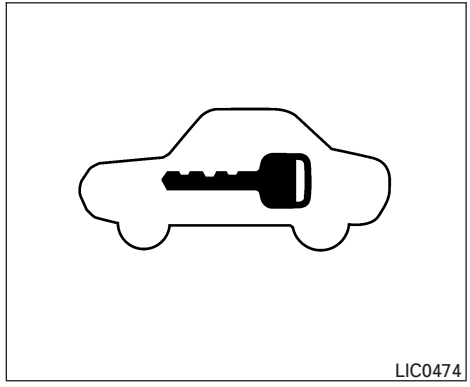

Security indicator light

The security indicator light blinks whenever the ignition switch is placed in the OFF, LOCK or ACC position. This function indicates the NISSAN Vehicle Immobilizer System is operational.

If the NISSAN Vehicle Immobilizer System is malfunctioning, the light will remain on while the ignition switch is placed in the ON position.

If the light still remains on and/or the engine will not start, see a NISSAN dealer for NISSAN Vehicle Immobilizer System service as soon as possible. Please bring all registered keys that you have when visiting your NISSAN dealer for service.

WINDSHIELD WIPER AND WASHER SWITCH

⚠ WARNING

In freezing temperatures the washer solution may freeze on the window and obscure your vision which may lead to an accident. Warm the window with the defroster before you wash the window.

⚠ CAUTION

- **Do not operate the washer continuously for more than 30 seconds.**
- **Do not operate the washer if the reservoir tank is empty.**
- **Do not fill the window washer reservoir with washer fluid concentrates at full strength. Some methyl alcohol based washer fluid concentrates may permanently stain the grille if spilled while filling the window washer reservoir.**
- **Pre-mix washer fluid concentrates with water to the manufacturer's recommended levels before pouring the fluid into the window washer reservoir. Do not use the window washer reservoir to mix the washer fluid concentrate and water.**

If the windshield wiper operation is interrupted by snow or ice, the wiper may stop moving to protect its motor. If this occurs, turn the wiper switch to the OFF position and remove the snow or ice that is on and around the wiper arms. In approximately 1 minute, turn the switch on again to operate the wiper.

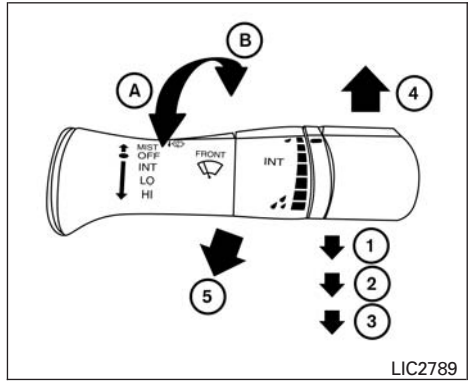

Type A (if so equipped)

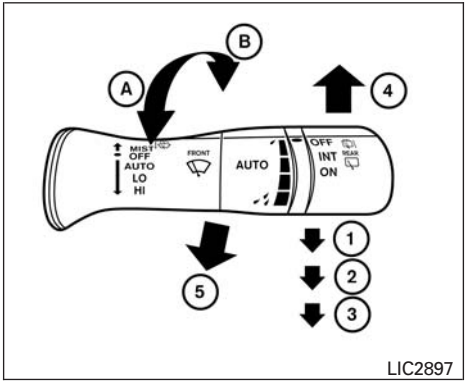

Type B (if so equipped)

SWITCH OPERATION

The windshield wiper and washer operates when the ignition switch is in the ON position.

Push the lever down to operate the wiper at the following speed:

① Intermittent (INT) — intermittent operation can be adjusted by turning the knob toward Ⓐ (Slower) or Ⓑ (Faster). Also, the intermittent operation speed varies in accordance with the vehicle speed. (For example, when the vehicle speed is high, the intermittent operation speed will be faster.)

② Low (LO) — continuous low speed operation

③ High (HI) — continuous high speed operation

Push the lever up ④ to have 1 sweep operation (MIST) of the wiper.

Pull the lever toward you ⑤ to operate the washer. The wiper will also operate several times.

REAR WINDOW WIPER AND WASHER SWITCH

⚠ WARNING

In freezing temperatures the washer solution may freeze on the window and obscure your vision. Warm the rear window with the defroster before you wash the rear window.

⚠ CAUTION

- **Do not operate the washer continuously for more than 30 seconds.**
- **Do not operate the washer if the reservoir is empty.**
- **Do not fill the windshield-washer fluid reservoir with washer fluid concentrates at full strength. Some methyl alcohol based washer fluid concentrates may permanently stain the grille if spilled while filling the windshield-washer fluid reservoir.**
- **Pre-mix washer fluid concentrates with water to the manufacturer's recommended levels before pouring the fluid into the windshield-washer fluid reservoir. Do not use the windshield-washer fluid reservoir to mix the washer fluid concentrate and water.**

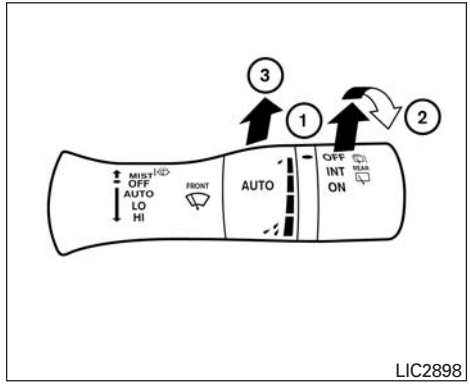

LIC2898

If the rear window wiper operation is interrupted by snow, etc., the wiper may stop moving to protect its motor. If this occurs, turn the wiper switch to OFF and remove the snow, etc. on and around the wiper arms. After about 1 minute, turn the switch ON again to operate the wiper.

The rear window wiper and washer operate when the ignition switch is in the ON position. Turn the switch clockwise from the OFF position to operate the wiper.

① Intermittent (INT) — intermittent operation (not adjustable)

② Low (ON) — continuous low speed operation

Push the switch forward ③ to operate the washer. The wiper will also operate several times.

REAR WINDOW AND OUTSIDE MIRROR DEFROSTER SWITCH

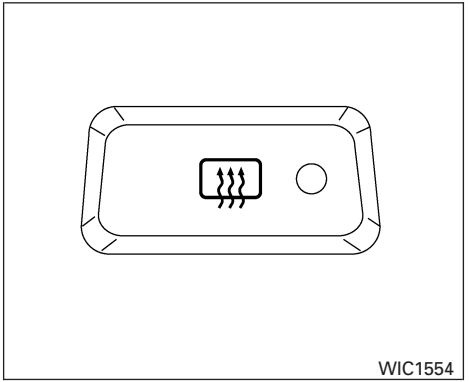

Type A (if so equipped)

To defrost the rear window glass and outside mirrors (if so equipped), start the engine and push the rear window defroster switch on. The rear window defroster indicator light on the switch comes on. Push the switch again to turn the defroster off.

The rear window defroster automatically turns off after approximately 15 minutes.

⚠ CAUTION

When cleaning the inner side of the rear window, be careful not to scratch or damage the rear window defroster.

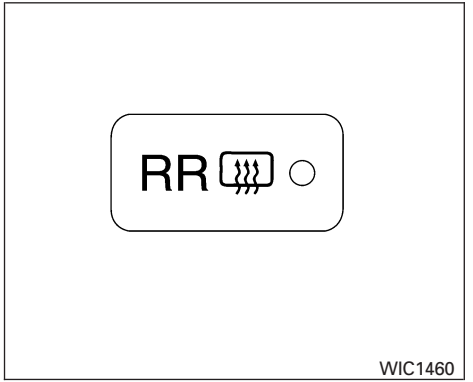

Type B (if so equipped)

NOTE:

The top and bottom few rows of wires on the rear window are not part of the rear window defroster system. These wires make up the antenna for the audio system.

HEADLIGHT AND TURN SIGNAL SWITCH

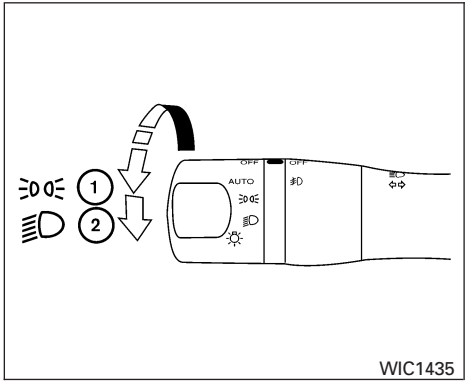

Type A (if so equipped)

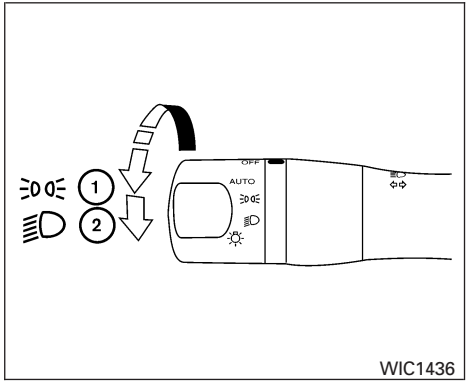

Type B (if so equipped)

HEADLIGHT CONTROL SWITCH

Lighting

① When turning the switch to the position, the front parking, tail, license plate and instrument panel lights come on.

② When turning the switch to the position, the headlights come on and all the other lights remain on.

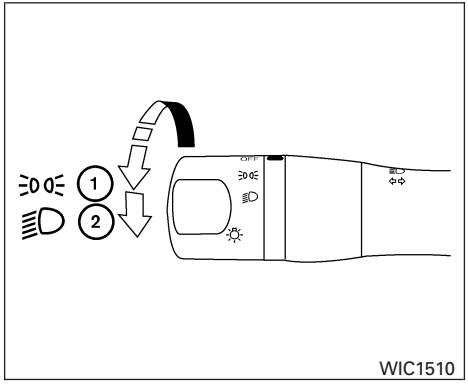

Type C (if so equipped)

⚠ CAUTION

Use the headlights with the engine running to avoid discharging the vehicle battery.

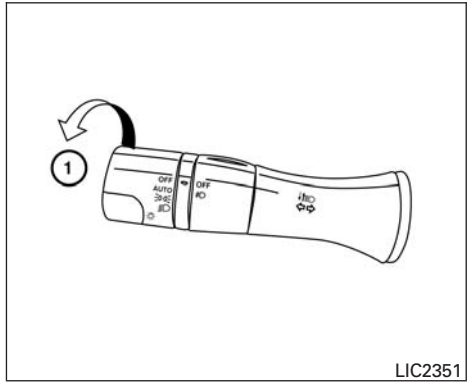

Autolight system

The autolight system allows the headlights to turn on and off automatically. The autolight system can:

- Turn on the headlights, front parking, tail, license plate and instrument panel lights automatically when it is dark.
- Turn off all the lights when it is light.
- Keep all the lights on for a period of time after you place the ignition switch in the OFF position and all doors are closed.

NOTE:

Autolight activation sensitivity and the time delay for autolight shutoff can be adjusted. For additional information, refer to "Vehicle information display" in this section.

To turn on the autolight system:

1. Turn the headlight switch to the AUTO position ①.
2. Turn the ignition switch to ON.
3. The autolight system automatically turns the headlights on and off.

Initially, if the ignition switch is turned off and a door is opened and left open, the headlights remain on for a period of time. If another door is opened while the headlights are on, then the timer is reset.

To turn the autolight system off, turn the switch to the OFF, , or position.

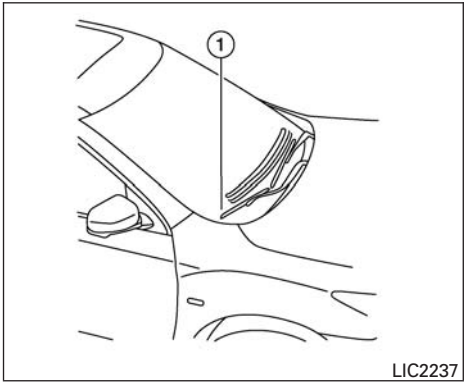

Be sure you do not put anything on top of the autolight sensor located in the top side ① of the instrument panel. The autolight sensor controls the autolight; if it is covered, the autolight sensor reacts as if it is dark out and the headlights will illuminate. If this occurs while parked with the engine off and the ignition switch placed in the ON position, your vehicle's battery could become discharged.

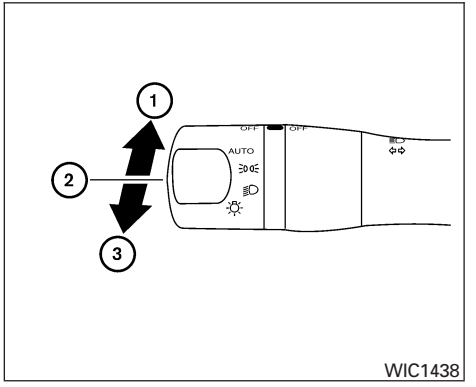

Headlight beam select

① To select the high beam function, push the lever forward. The high beam lights come on and the light illuminates.

② Pull the lever back to select the low beam.

③ Pulling and releasing the lever flashes the headlight high beams on and off.

Battery saver system

The battery saver automatically turns off the ignition after a period of time when the ignition switch is left in the ACC or ON position.

DAYTIME RUNNING LIGHT SYSTEM (Canada only)

The daytime running lights automatically illuminate when the engine is started with the parking brake released. The daytime running lights operate with the headlight switch in the OFF position or in the position. Turn the headlight switch to the position for full illumination when driving at night.

If the parking brake is applied before the engine is started, the daytime running lights do not illuminate. The daytime running lights illuminate when the parking brake is released. The daytime running lights will remain on until the ignition switch is placed in the OFF position.

WARNING

When the daytime running light system is active, tail lights on your vehicle are not on. It is necessary at dusk to turn on your headlights. Failure to do so could cause an accident injuring yourself and others.

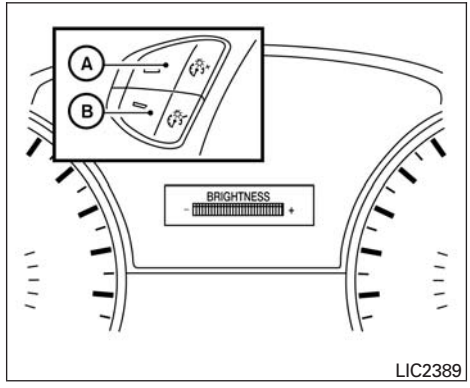

LIC2389

INSTRUMENT BRIGHTNESS CONTROL

Push the "+" button Ⓐ to increase the brightness of instrument panel lights when driving at night.

Push the "-" button Ⓑ to decrease the brightness of instrument panel lights when driving at night.

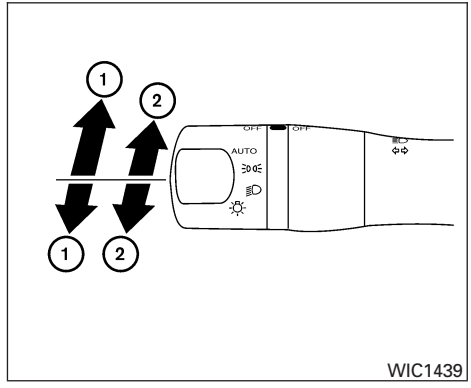

WIC1439

TURN SIGNAL SWITCH

Turn signal

① Move the lever up or down to signal the turning direction. When the turn is completed, the turn signal cancels automatically.

Lane change signal

② Move the lever up or down until the turn signal begins to flash, but the lever does not latch, to signal a lane change. Hold the lever until the lane change is completed.
Move the lever up or down until the turn signal begins to flash, but the lever does not latch, and release the lever. The turn signal will automatically flash three times.

Choose the appropriate method to signal a lane change based on road and traffic conditions.

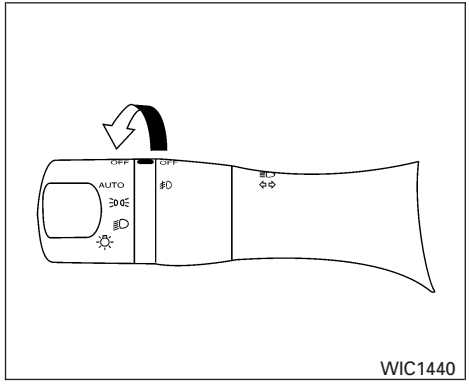

Type A (if so equipped)

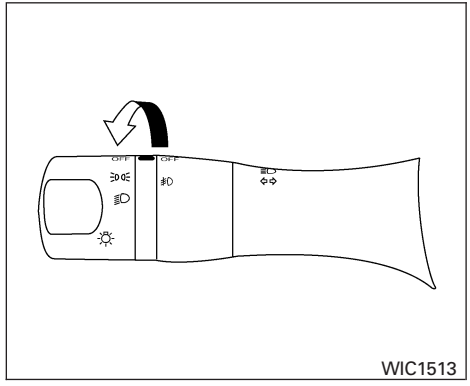

Type B (if so equipped)

FOG LIGHT SWITCH

To turn the fog lights on, turn the headlight switch to the position, then turn the fog light switch to the position.

To turn the fog lights on with the headlight switch in the AUTO position, the headlights must be on, then turn the fog light switch to the position.

To turn the fog lights off, turn the fog light switch to the OFF position.

The headlights must be on and the low beams selected for the fog lights to operate. The fog lights automatically turn off when the high beam headlights are selected.

HORN

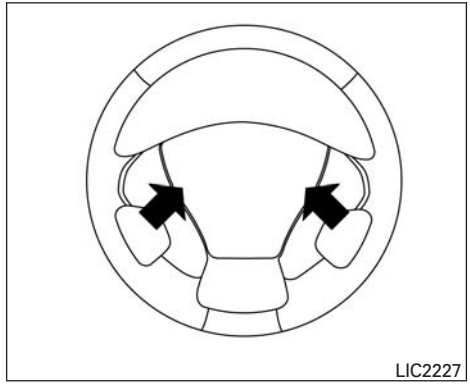

To sound the horn, push near the horn icon on the steering wheel.

⚠ WARNING

Do not disassemble the horn. Doing so could affect proper operation of the supplemental front air bag system. Tampering with the supplemental front air bag system may result in serious personal injury.

HEATED SEATS (if so equipped)

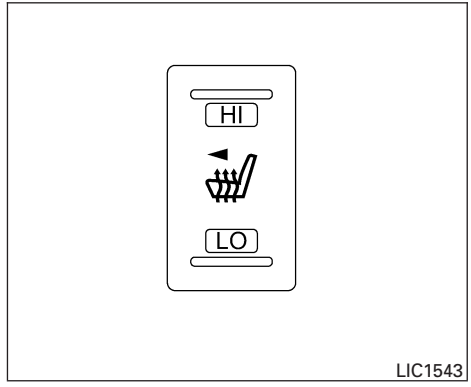

The front seats are warmed by built-in heaters.

1. Start the engine.
2. Push the LO or HI position of the switch, as desired. The indicator light in the switch will illuminate.

   The heater is controlled by a thermostat, automatically turning the heater on and off. The indicator light will remain on as long as the switch is on.
3. When the seat is warmed or before you leave the vehicle, be sure to turn the switch off.

WARNING

Do not use or allow occupants to use the seat heater if you or the occupants cannot monitor elevated seat temperatures or have an inability to feel pain in body parts that contact the seat. Use of the seat heater by such people could result in serious injury.

CAUTION

- **The battery could run down if the seat heater is operated while the engine is not running.**
- **Do not use the seat heater for extended periods or when no one is using the seat.**
- **Do not put anything on the seat which insulates heat, such as a blanket, cushion, seat cover, etc. Otherwise, the seat may become overheated.**
- **Do not place anything hard or heavy on the seat or pierce it with a pin or similar object. This may result in damage to the heater.**
- **Any liquid spilled on the heated seat should be removed immediately with a dry cloth.**
- **When cleaning the seat, never use gasoline, benzine, thinner, or any similar materials.**
- **If any malfunctions are found or the heated seat does not operate, turn the switch off and have the system checked by your NISSAN dealer.**

HEATED 2ND ROW SEATS (if so equipped)

WARNING

Do not use or allow occupants to use the seat heater if you or the occupants cannot monitor elevated seat temperatures or have an inability to feel pain in body parts that contact the seat. Use of the seat heater by such people could result in serious injury.

CAUTION

- **The battery could run down if the seat heater is operated while the engine is not running.**
- **Do not use the seat heater for extended periods or when no one is using the seat.**
- **Do not put anything on the seat which insulates heat, such as a blanket, cushion, seat cover, etc. Otherwise, the seat may become overheated.**
- **Do not place anything hard or heavy on the seat or pierce it with a pin or similar object. This may result in damage to the heater.**
- **Any liquid spilled on the heated seat should be removed immediately with a dry cloth.**

- **When cleaning the seat, never use gasoline, benzine, thinner, or any similar materials.**
- **If any malfunctions are found or the heated seat does not operate, turn the switch off and have the system checked by a NISSAN dealer.**

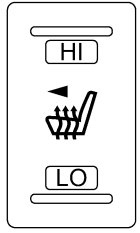

LIC1543

The 2nd row seats are warmed by built-in heaters. The switches are located on the rear of the front center console and can be operated independently of each other.

1. Start the engine.
2. Push the LO or HI position of the switch, as desired. The indicator light in the switch will illuminate.

   The heater is controlled by a thermostat, automatically turning the heater on and off. The indicator light will remain on as long as the switch is on.
3. When the seat is warmed or before you leave the vehicle, be sure to turn the switch off.

CLIMATE CONTROLLED SEAT SWITCH (if so equipped)

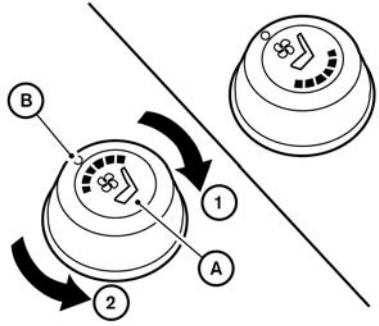

LIC2877

The climate controlled seat warms up or cools down the front seat by blowing warm or cool air from under the surface of the seat. The climate control switch is located on the center console.

The climate controlled seat can be operated as follows:

1. Start the engine.
2. Turn the control knob Ⓐ to the heat side ① or the cool side ②. The indicator light Ⓑ on the control knob will illuminate.

3. Adjust the desired amount of air using the control knob. The climate controlled seat blower remains on low speed for approximately 60 seconds after turning the switch on or selecting the desired temperature.
4. When the vehicle's interior is warmed or cooled, or before you leave the vehicle, be sure to turn the control knob to the Off (center) position. The indicator light Ⓑ on the control knob goes off with the switch in the off (center) position.

To check the air filter for the climate controlled seat, contact a NISSAN dealer.

⚠WARNING

Do not use or allow occupants to use the climate controlled seats if you or the occupants can not monitor seat temperatures or have an inability to feel pain in those body parts in contact with the seat. Use of the climate controlled seats by such people could result in serious injury.

⚠CAUTION

- **The battery could run down if the climate control seat is operated while the engine is not running.**
- **Do not use the climate control seat for extended periods or when no one is using the seat.**
- **Do not put anything on the seat which insulates heat, such as a blanket, cushion, seat cover, etc. Otherwise, the seat may become overheated.**
- **Do not place anything hard or heavy on the seat or pierce it with a pin or similar objects. This may result in damage to the climate controlled seat.**
- **Any liquid spilled on the seat should be removed immediately with a dry cloth**
- **The climate controlled seat has an air filter. Do not operate the climate controlled seat without an air filter. This may result in damage to the system.**
- **When cleaning the seat, never use gasoline, benzine, thinner, or any similar materials.**
- **If any malfunctions are found or the climate controlled seat does not operate, turn the switch off and have the system checked by your NISSAN dealer.**

HEATED STEERING WHEEL (if so equipped)

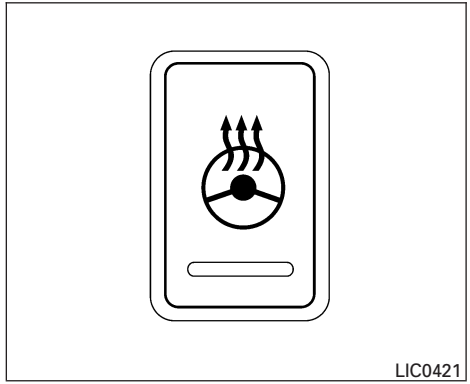

The heated steering wheel system is designed to operate only when the surface temperature of the steering wheel is below approximately 68°F (20°C).

Push the heated steering wheel switch to warm the steering wheel after the engine starts. The indicator light will come on.

If the surface temperature of the steering wheel is below 68°F (20°C), the system will heat the steering wheel to approximately 86°F (30°C), then turn off automatically.

Push the switch again to turn the heated steering wheel off manually. The indicator light will go off.

NOTE:

The heated steering wheel switch is equipped with a 30 minute timer. After the switch has been activated for 30 minutes, the system will automatically turn off. If the surface temperature of the steering wheel is above 68°F (20°C) when the switch is turned on, the system will not heat the steering wheel. This is not a malfunction.

VEHICLE DYNAMIC CONTROL (VDC) OFF SWITCH

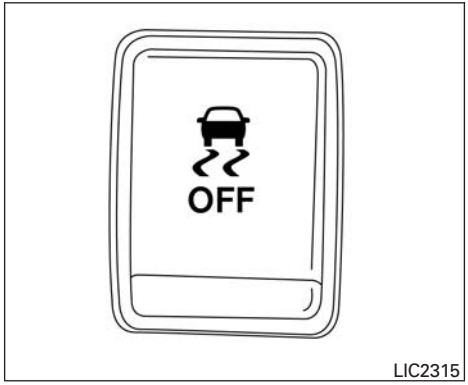

The vehicle should be driven with the VDC system on for most driving conditions.

If the vehicle is stuck in mud or snow, the VDC system reduces the engine output to reduce wheel spin. The engine speed will be reduced even if the accelerator is depressed to the floor. If maximum engine power is needed to free a stuck vehicle, turn the VDC system off.

To turn off the VDC system, push the VDC OFF switch. The indicator will come on.

Push the VDC OFF switch again or restart the engine to turn on the system. For additional information, refer to “Vehicle Dynamic Control (VDC) system” in the “Starting and driving” section of this manual.

POWER INVERTER SWITCH (if so equipped)

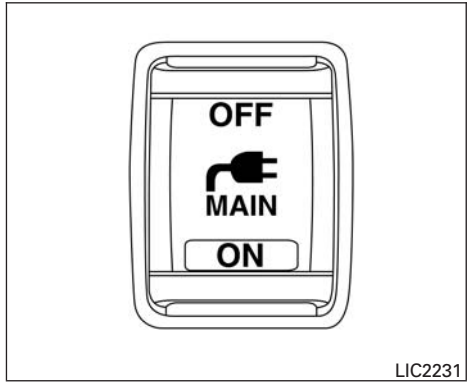

To use the outlets for devices that require 120v power, place the ignition in the ON position and push the power inverter switch.

The switch will illuminate when enabled.

⚠ CAUTION

- **Use power outlets with the engine running to avoid discharging the vehicle battery.**
- **Do not attempt to use this while driving.**
- **Do not use double adapters or more than one electrical accessory, doing so could significantly drain the battery of your vehicle.**

TOW MODE SWITCH

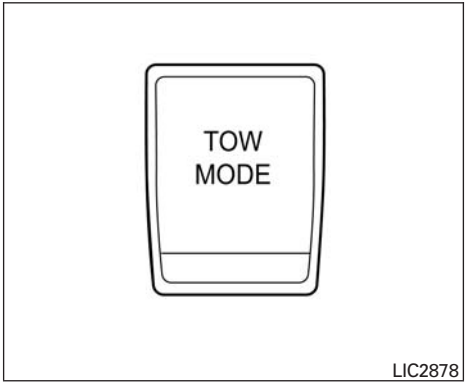

Tow mode should be used when pulling a heavy trailer or hauling a heavy load. Driving the vehicle in the tow mode with no trailer/load or light trailer/light load will not cause any damage. However, fuel economy may be reduced, and the transmission/engine driving characteristics may feel unusual.

Press the tow mode switch to activate tow mode. The indicator light on the tow mode switch illuminates when tow mode is selected. Press the tow mode switch again to turn tow mode OFF.

Tow mode is automatically canceled when the ignition switch is placed in the OFF position.

For additional information, refer to “Tow mode” in the “Technical and consumer information” in this section.

POWER OUTLETS

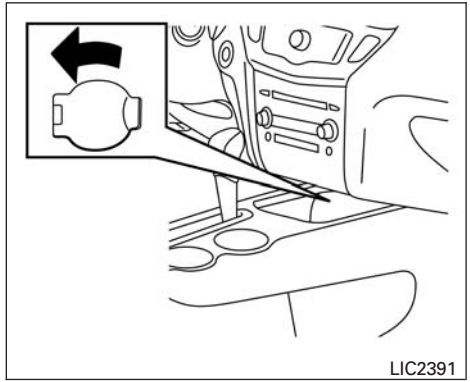

Instrument Panel

12V OUTLETS

The power outlets are for powering electrical accessories such as cellular telephones. They are rated at 12 volt, 120W (10A) maximum.

The front and center console power outlets are powered only when the ignition switch is in the ACC or ON position.

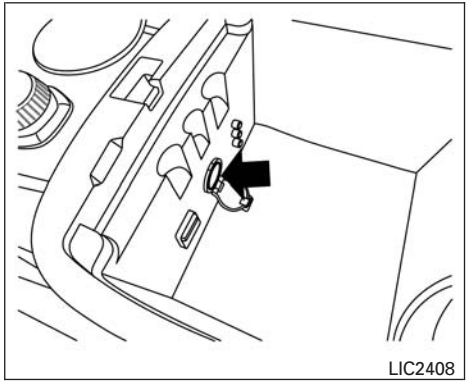

Center Console

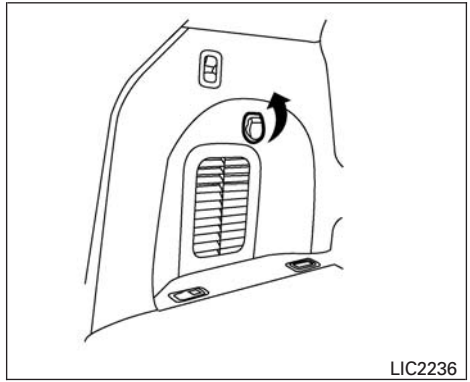

Cargo Area

⚠ CAUTION

- **The outlet and plug may be hot during or immediately after use.**
- **Only certain power outlets are designed for use with a cigarette lighter unit. Do not use any other power outlet for an accessory lighter. See your NISSAN dealer for additional information.**
- **Do not use with accessories that exceed a 12 volt, 120W (10A) power draw.**
- **Do not use double adapters or more than one electrical accessory.**
- **Use power outlets with the engine running to avoid discharging the vehicle battery.**
- **Avoid using power outlets when the air conditioner, headlights or rear window defroster is on.**
- **Before inserting or disconnecting a plug, be sure the electrical accessory being used is turned OFF.**
- **Push the plug in as far as it will go. If good contact is not made, the plug may overheat or the internal temperature fuse may open.**
- **When not in use, be sure to close the cap. Do not allow water or any other liquid to contact the outlet.**

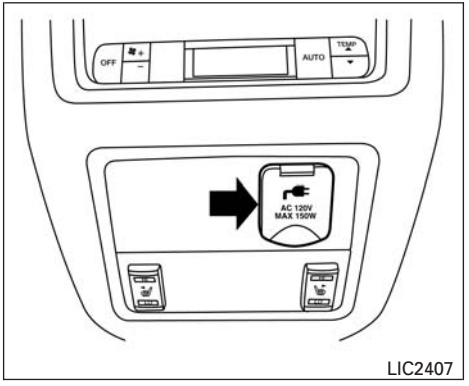

2nd Row

120V OUTLET (if so equipped)

CAUTION

- **The outlet and plug may be hot during or immediately after use.**
- **Use power outlets with the engine running to avoid discharging the vehicle battery.**
- **Do not use double adaptors or more than one electrical accessory.**
- **Avoid using power outlets when the air conditioner, headlights or rear window defroster is on.**
- **Before inserting or disconnecting a plug, be sure the electrical accessory being used is turned OFF.**
- **Push the plug in as far as it will go. If good contact is not made, the plug may overheat or the internal temperature fuse may open.**
- **When not in use, be sure to close the cap. Do not allow water or any other liquid to contact the outlet.**

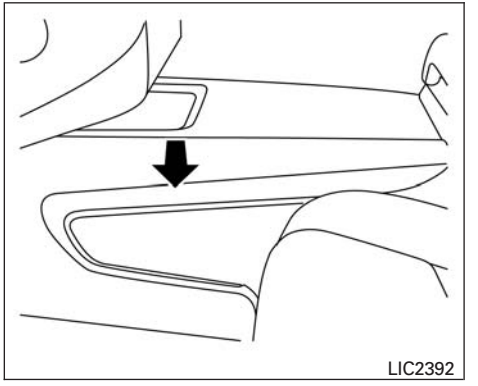

Front Console

MAP POCKETS

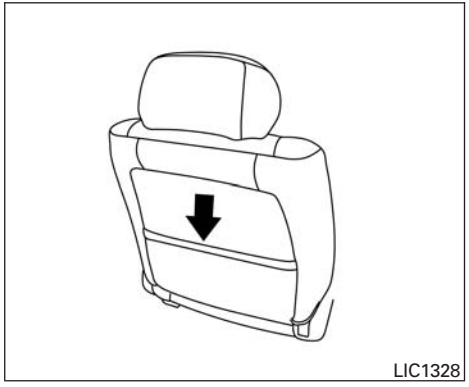

SEATBACK POCKET

The seatback pocket is located on the back of the driver's seat. The pocket can be used to store maps.

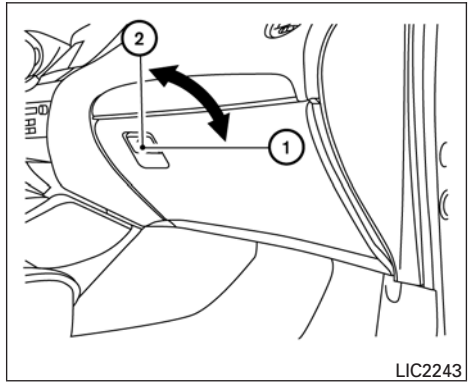

GLOVE BOX

Open the glove box by pulling the handle. Use the master key when locking ① or unlocking ② the glove box.

⚠WARNING

Keep glove box lid closed while driving to help prevent injury in an accident or a sudden stop.

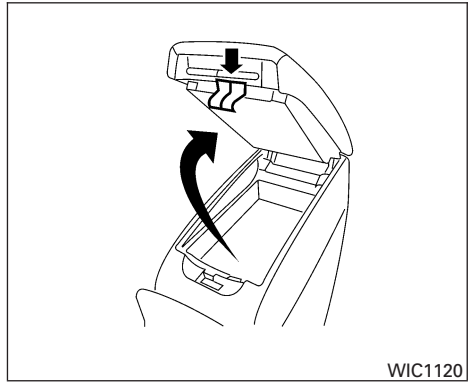

CONSOLE BOX

Upper half

Pull up on the driver's side latch to open the upper half of the console box.

The upper half of the console box may be used for storage of cellular phones. An access hole is provided at the front of the upper half of the console box for a phone or iPod® cord routing to the power outlet.

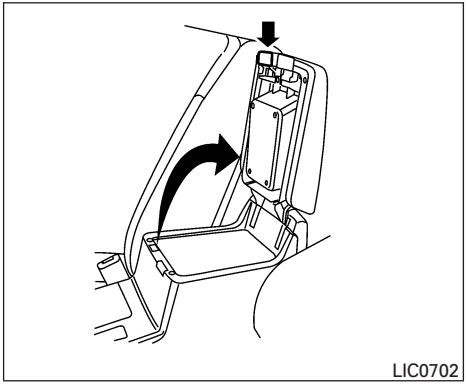

Lower half

Pull up on the passenger's side latch to open the lower half of the console box. A power outlet is located inside the console box and there is storage for compact discs.

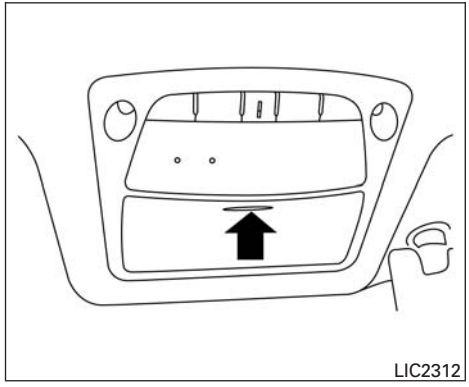

SUNGLASSES HOLDER

To open the sunglasses holder, push and release.

⚠ WARNING

- **Keep the sunglasses holder closed while driving to prevent an accident.**

⚠ CAUTION

- **Do not leave sunglasses in the sunglasses holder while parking in direct sunlight. The heat may damage the sunglasses.**
- **Do not use for anything other than sunglasses.**

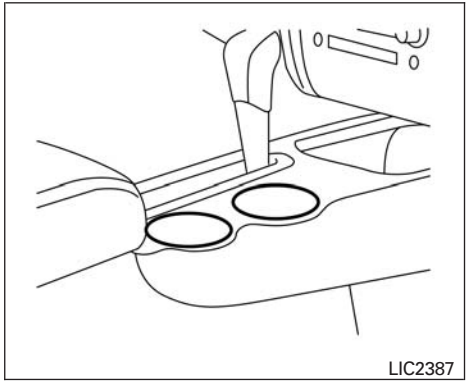

Front console

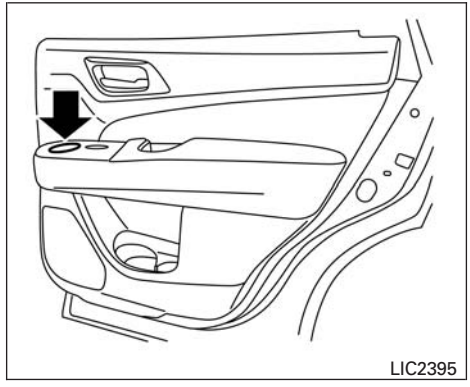

Rear door

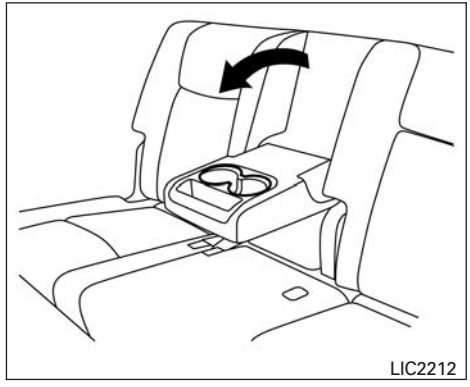

2nd row

CUP HOLDERS

⚠ CAUTION

Do not recline the rear seatback when you use the cup holders on the rear armrest. Doing so may cause the beverages to spill over, and if they are hot, they may scald the passengers.

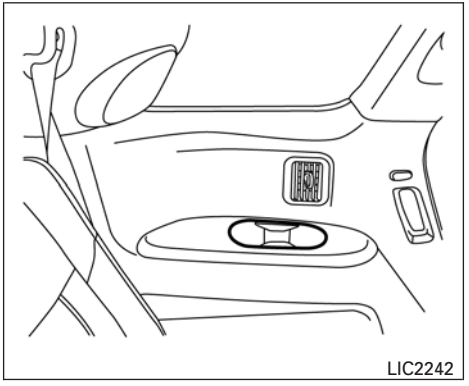

3rd row

CAUTION

- **Avoid abrupt starting and braking when the cup holder is being used to prevent spilling the drink. If the liquid is hot, it can scald you or your passenger.**
- **Use only soft cups in the cup holder. Hard objects can injure you in an accident.**

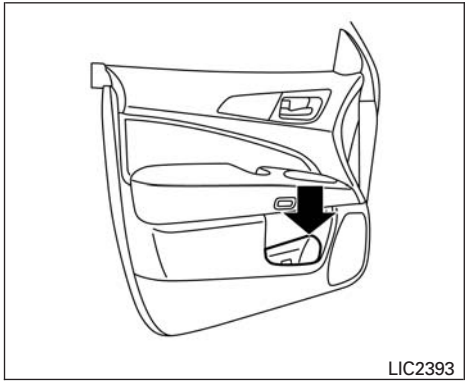

Bottle holder — front

CAUTION

- **Do not use bottle holder for any other objects that could be thrown about in the vehicle and possibly injure people during sudden braking or an accident.**
- **Do not use bottle holder for open liquid containers.**

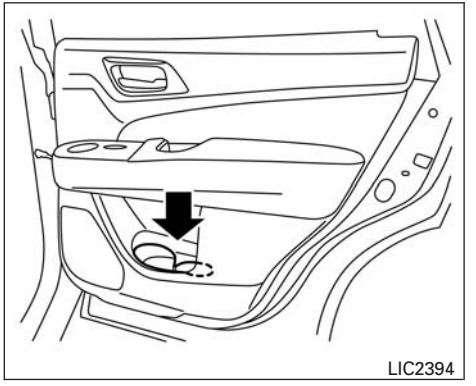

Bottle holder — rear

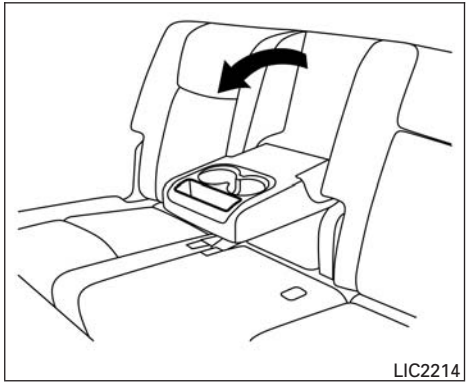

STORAGE TRAY

⚠ WARNING

Do not place sharp objects in the trays to help prevent injury in an accident or sudden stop.

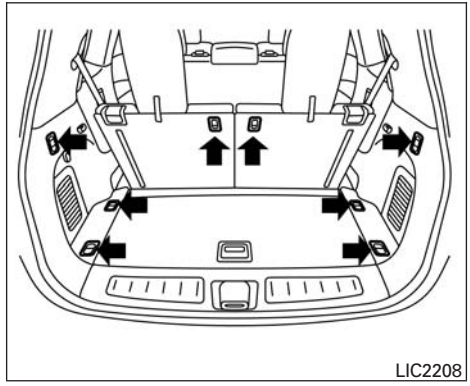

LUGGAGE HOOKS

When securing items using luggage hooks located on the back of the seat or side finisher do not apply a load over more than 6.5 lbs (29 N) to a single hook.

The luggage hooks that are located on the floor should have loads less than 110 lbs (490 N) to a single hook.

The luggage hooks can be used to secure cargo with ropes or other types of straps.

⚠ WARNING

- **Properly secure all cargo with ropes or straps to help prevent it from sliding or shifting. Do not place cargo higher than the seatbacks. In a sudden stop or collision, unsecured cargo could cause personal injury.**
- **Use suitable ropes and hooks to secure cargo.**
- **Never allow anyone to ride in the luggage area. It is extremely dangerous to ride in a cargo area inside of a vehicle. In a collision, people riding in these areas are more likely to be seriously injured or killed.**
- **Do not allow people to ride in any area of your vehicle that is not equipped with seats and seat belts.**
- **The child restraint top tether strap may be damaged by contact with items in the cargo area. Secure any items in the cargo area. Your child could be seriously injured or killed in a collision if the top tether strap is damaged.**
- **Be sure everyone in your vehicle is in a seat and using a seat belt properly.**

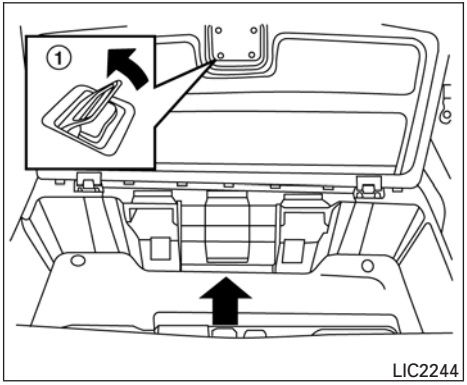

CARGO AREA STORAGE BIN

To access the floor storage area, push down ① to raise the handle, then pull up on the handle to lift the luggage board.

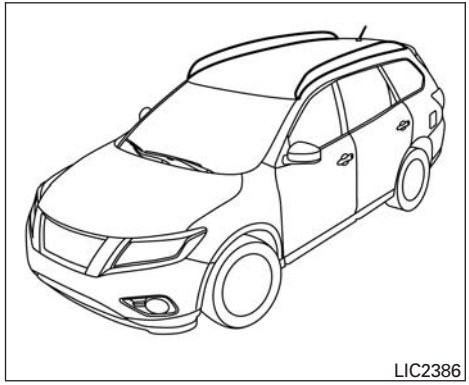

ROOF RACK

Genuine NISSAN accessory cross bars are available through your NISSAN dealer. Contact an NISSAN dealer for crossbar or other equipment information.

Always distribute the luggage evenly on the cross bars. Do not load more than 150 lb (68 kg) on the cross bars. Observe the maximum load limit shown on the cross bars or roof carriers when you attach them on the roof cross bars. Contact an NISSAN dealer for crossbar or other equipment information.

Do not apply any load directly to the roof side rails. Cross bars must be installed before applying load/cargo/luggage to the roof of the vehicle.

Be careful that your vehicle does not exceed the Gross Vehicle Weight Rating (GVWR) or its Gross Axle Weight Rating (GAWR front and rear). The GVWR and GAWR are located on the F.M.V.S.S. or C.V.M.S.S. certification label (located on the driver's door pillar). For additional information regarding GVWR and GAWR, refer to "Vehicle loading information" in the "Technical and customer information" section of this manual.

⚠ WARNING

- **Drive extra carefully when the vehicle is loaded at or near the cargo carrying capacity, especially if the significant portion of that load is carried on the cross bars.**
- **Heavy loading of the cross bars has the potential to affect the vehicle stability and handling during sudden or unusual handling maneuvers.**
- **Roof rack cross bars should be evenly distributed.**
- **Do not exceed maximum roof rack cross bars load.**

- **Properly secure all cargo with ropes or straps to help prevent it from sliding or shifting. In a sudden stop or collision, unsecured cargo could cause personal injury.**

⚠ CAUTION

Always install the cross bars onto the roof side rails before loading cargo of any kind. Loading cargo directly onto the roof side rails or the vehicle's roof may cause vehicle damage.

POWER WINDOWS

⚠ WARNING

- **Make sure that all passengers have their hands, etc. inside the vehicle while it is in motion and before closing the windows. Use the window lock switch to prevent unexpected use of the power windows.**
- **Do not leave children unattended inside the vehicle. They could unknowingly activate switches or controls and become trapped in a window. Unattended children could become involved in serious accidents.**

The power windows operate when the ignition switch is placed in the ON position, or for a period of time after the ignition switch is placed in the OFF position. If the driver's or passenger's door is opened during this period of time, the power to the windows is canceled.

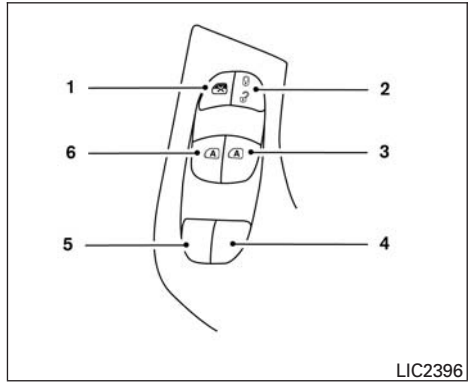

1. Window lock button
2. Power door lock switch
3. Front passenger side automatic switch
4. Right rear passenger side switch
5. Left rear passenger side switch
6. Driver side automatic switch

Driver's side power window switch

The driver's side control panel is equipped with switches to open or close all of the windows.

To open a window, push the switch to the first detent and continue to hold down until the desired window position is reached. To close a window, pull the switch to the first detent and continue to hold up until the desired window position is reached.

Locking passengers' windows

When the window lock switch is depressed, only the driver's side window can be opened or closed. Push it again to cancel the window lock function.

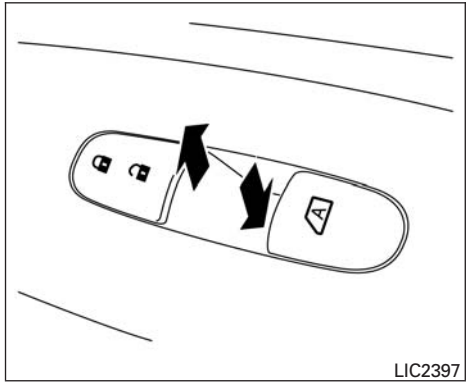

Front passenger's power window switch

The passenger's window switch operates only the corresponding passenger's window. To open the window partially, push the switch down lightly until the desired window position is reached. To close the window partially, pull the switch up until the desired window position is reached.

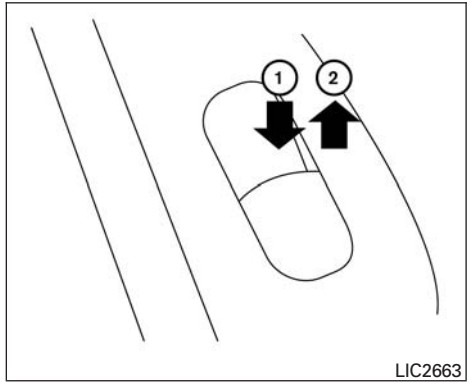

Rear power window switch

The rear power window switches open or close only the corresponding windows. To open the window, push the switch and hold it down ①. To close the window, pull the switch up ②.

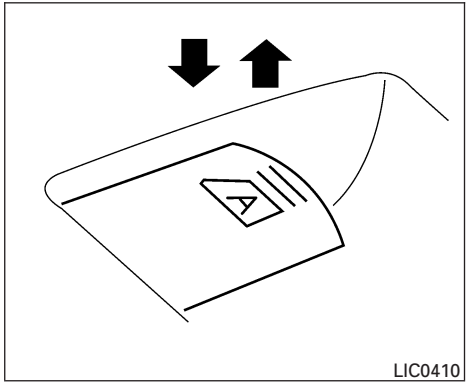
LIC0410

Automatic operation

To fully open a window equipped with automatic operation, press the window switch down to the second detent and release it; it need not be held. The window automatically opens all the way. To stop the window, lift the switch up while the window is opening.

Auto-reverse function

The auto-reverse function can be activated when a window is closed by automatic operation.

Depending on the environment or driving conditions, the auto-reverse function may be activated if an impact or load similar to something being caught in the window occurs.

⚠ WARNING

There are some small distances immediately before the closed position which cannot be detected. Make sure that all passengers have their hands, etc., inside the vehicle before closing the window.

If the vehicle's battery is disconnected, replaced, or jump started, the power window auto-reverse function may not operate properly. If this occurs, please contact the dealer to re-initialize the power window auto-reverse system.

If the control unit detects something caught in a window equipped with automatic operation as it is closing, the window will be immediately lowered.

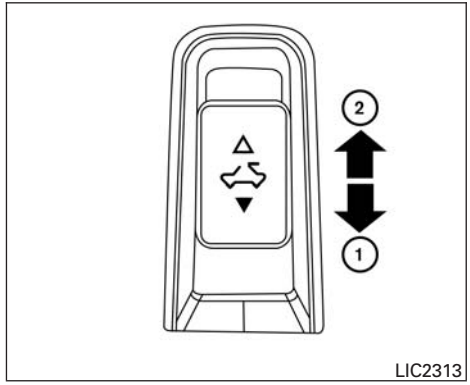

LIC2313

POWER MOONROOF

The moonroof will only operate when the ignition switch is placed in the ON position. The power moonroof is operational for a period of time, even if the ignition switch is placed in the ACC or OFF position. If the driver's door or the front passenger's door is opened during this period of time, the power to the moonroof is canceled.

Sliding the moonroof

To fully open or close the moonroof, push the switch to the open ② or close ① position and release it; it need not be held. The roof will

automatically open or close all the way. To stop the roof, push the switch once more while it is opening or closing.

Tilting the moonroof

To tilt up, first close the moonroof, then push the switch to the tilt up position ① and release it; it need not be held. To tilt down the moonroof, push the switch to the tilt down position ②.

Resetting the moonroof switch

If the moonroof does not operate properly, perform the following procedure to initialize the moonroof operation system.

1. Turn ignition switch ON.
2. Press and hold the moonroof tilt switch forward until the moonroof stops.
3. Release the moonroof switch.
4. Press and hold the tilt up switch within 6 seconds.
5. The roof glass will Tilt-Down, Slide-Close, Slide-Open, Slide-Close, Tilt-Up, Tilt-Down.
6. Release the switch; initialization is complete if the moonroof operates normally.

If the moonroof does not operate properly after performing the procedure above, have your vehicle checked by a NISSAN dealer.

Auto-reverse function (when closing or tilting down the moonroof)

The auto-reverse function can be activated when the moonroof is closed or tilted down by automatic operation when the ignition switch is placed in the ON position or for a period of time after the ignition switch is placed in the OFF position.

Depending on the environment or driving conditions, the auto-reverse function may be activated if an impact or load similar to something being caught in the moonroof occurs.

⚠ WARNING

There are some small distances immediately before the closed position which cannot be detected. Make sure that all passengers have their hands, etc., inside the vehicle before closing the moonroof.

When closing

If the control unit detects something caught in the moonroof as it moves to the front, the moonroof will immediately open backward.

When tilting down

If the control unit detects something caught in the moonroof as it tilts down, the moonroof will immediately tilt up.

If the auto-reverse function malfunctions and repeats opening or tilting up the moonroof, keep pushing the tilt down switch within 5 seconds after it happens; the moonroof will fully close gradually. Make sure nothing is caught in the moonroof.

⚠ WARNING

- **In an accident you could be thrown from the vehicle through an open moonroof. Always use seat belts and child restraints.**
- **Do not allow anyone to stand up or extend any portion of their body out of the moonroof opening while the vehicle is in motion or while the moonroof is closing.**

⚠ CAUTION

- **Remove water drops, snow, ice or sand from the moonroof before opening.**
- **Do not place heavy objects on the moonroof or surrounding area.**

Sunshade

Open and close the sunshade by sliding it forward or backward.

If the moonroof does not close

Have your NISSAN dealer check and repair the moonroof.

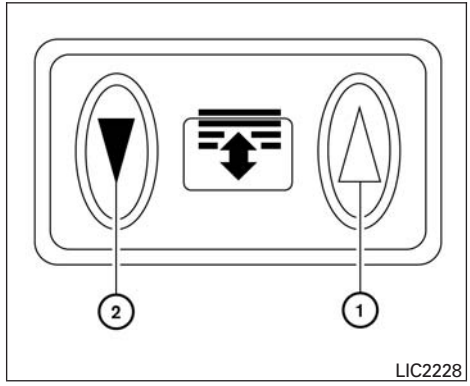

PANORAMIC SUNSHADE (if so equipped)

The panoramic sunshade operates when the ignition switch is in the ON position. The sunshade switch is located near the roof console. When opening or closing the sunshade the switch need not be held.

To open the sunshade:

- To fully open the sunshade, push the switch ① toward the open position.

To close the sunshade:

- To fully close the sunshade, push the switch ② toward the close position.

⚠ WARNING

- **To avoid personal injury, keep your hands, fingers and head away from the sunshade arm, the arm rail and sunshade inlet port.**
- **Do not allow children near the rear sunshade system. They could be injured.**
- **Do not place objects on or near the rear sunshade. This could cause improper operation or damage it.**
- **Do not pull or push the rear sunshade. This could cause improper operation or damage it.**

⚠ CAUTION

- **Do not place objects (such as newspapers, handkerchiefs, etc.) on the sunshade inlet port. Doing so may entangle these objects in the sunshade when it is extending or retracting, causing improper operation or damage to the sunshade.**

- **Do not push the sunshade arm with your hands, etc., as this may deform it. Improper operation or damage to the sunshade may result.**
- **Do not put any object into the sunshade inlet port as this may result in improper operation or damage the sunshade.**
- **Do not hang any object on the arm rail as this may result in improper operation or damage the sunshade.**
- **Do not forcefully pull the sunshade. Doing so may elongate the sunshade. Improper operation or damage to the sunshade may result.**

Restarting the sunshade switch

If the sunshade does not operate properly, perform the following procedure to initialize the sunshade operation system.

1. Switch the vehicle ignition to the ACCESSORY or RUN mode.
2. Press and hold the sunshade close switch.
3. Sunshade will begin moving towards the close position only while the switch is continually pressed. (this disables the obstacle detection).
4. Sunshade will stop for about 4 seconds.
5. Sunshade drive cable will travel in the open direction for .394 in. (10 mm) then reverse direction and stop at the normal close position.
6. Release the sunshade close switch. Initialization procedure is complete.

If the moonroof does not operate properly after performing the procedure above, have your vehicle checked by a NISSAN dealer.

Auto-reverse function (when closing the sunshade)

The auto-reverse function can be activated when the sunshade is closed by automatic operation when the ignition switch is placed in the ON position or for a period of time after the ignition switch is placed in the OFF position.

Depending on the environment or driving conditions, the auto-reverse function may be activated if an impact or load similar to something being caught in the sunshade occurs.

⚠ WARNING

There are some small distances immediately before the closed position which cannot be detected. Make sure that all of the passengers have their hands, etc., inside the vehicle before closing the sunshade.

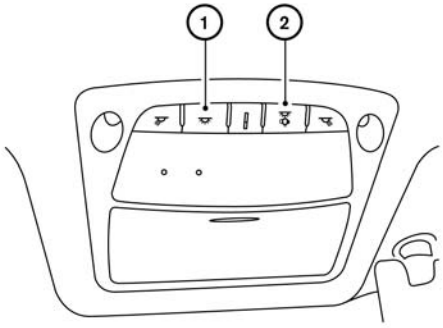

LIC2302

When the ON switch ① is pressed, the footwell lights (if so equipped), step lights (if so equipped), map lights and rear personal lights will automatically turn on and stay on for a period of time when:

- The doors are unlocked by the Intelligent Key, a key or the request switch (if so equipped) while all doors are closed and the ignition switch is in the OFF position.
- When individually pushed.

When the OFF switch ② is pushed, the interior lights do not illuminate even when pushed.

NOTE:

The footwell lights and step lights illuminate when the driver and passenger doors are open regardless of the interior light switch position. These lights will turn off automatically after a period of time while doors are open to prevent the battery from becoming discharged.

⚠ CAUTION

Do not use for extended periods of time with the engine stopped. This could result in a discharged battery.

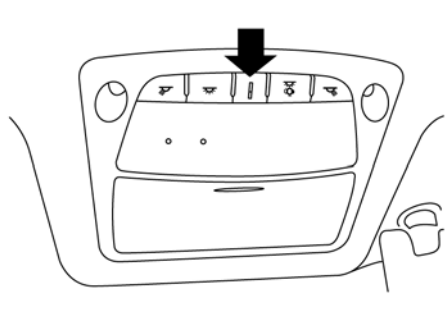
LIC2303

CONSOLE LIGHT

The console light will turn on whenever the parking lights or headlights are illuminated.

The console light brightness can be adjusted with the illumination brightness control.

PERSONAL LIGHTS

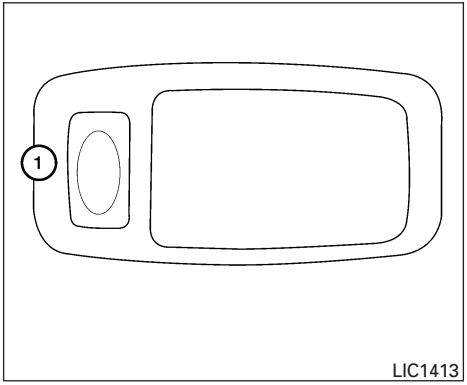

LIC1413

To turn on the personal lights, press and release the switch ①.

To turn the personal lights off, press and release the switch ①.

MAP LIGHTS

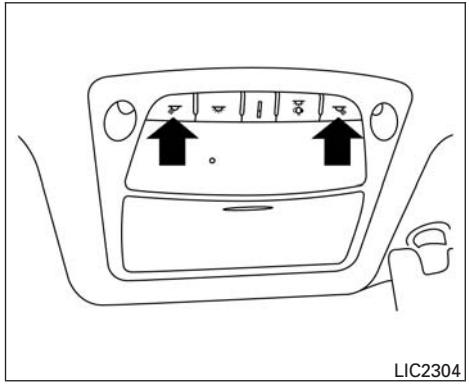
LIC2304

Push the button to turn the map lights on. To turn them off, press the button again.

⚠ CAUTION

Do not use for extended periods of time with the engine stopped. This could result in a discharged battery.

CARGO LIGHT

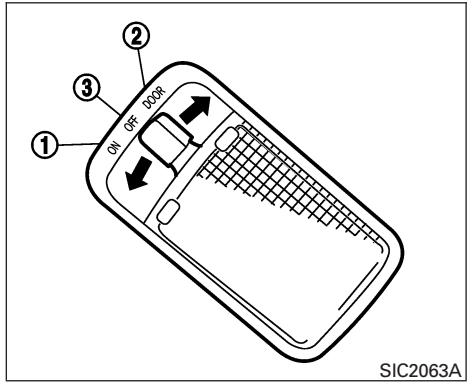

SIC2063A

The cargo light on the overhead trim has a three-position switch. To operate, push the switch to the desired position.

① ON: The light is illuminated.

② DOOR: The light illuminates when the liftgate is opened. The light turns off when the liftgate is closed.

③ OFF: The light does not illuminate regardless of liftgate position or lock status.

⚠ CAUTION

Do not use for extended periods of time with the engine stopped. This could result in a discharged battery.

HOMELINK® UNIVERSAL TRANSCEIVER

The HomeLink® Universal Transceiver provides a convenient way to consolidate the functions of up to three individual hand-held transmitters into one built-in device.

HomeLink® Universal Transceiver:

- Will operate most Radio Frequency (RF) devices such as garage doors, gates, home and office lighting, entry door locks and security systems.
- Is powered by your vehicle's battery. No separate batteries are required. If the vehicle's battery is discharged or is disconnected, HomeLink® will retain all programming.

When the HomeLink® Universal Transceiver is programmed, retain the original transmitter for future programming procedures (Example: new vehicle purchases). Upon sale of the vehicle, the programmed HomeLink® Universal Transceiver buttons should be erased for security purposes. For additional information, refer to "Programming HomeLink®" in this section.

⚠ WARNING

- **Do not use the HomeLink® Universal Transceiver with any garage door opener that lacks safety stop and reverse features as required by federal safety standards. (These standards became effective for opener models manufactured after April 1, 1982). A garage door opener which cannot detect an object in the path of a closing garage door and then automatically stop and reverse, does not meet current federal safety standards. Using a garage door opener without these features increases the risk of serious injury or death.**
- **During the programming procedure your garage door or security gate will open and close (if the transmitter is within range). Make sure that people or objects are clear of the garage door, gate, etc. that you are programming.**
- **Your vehicle's engine should be turned off while programming the HomeLink® Universal Transceiver.**

PROGRAMMING HOMELINK®

If you have any questions or are having difficulty programming your HomeLink® buttons, refer to the HomeLink® web site at: www.homelink.com or call 1-800-355-3515.

NOTE:

Place the ignition switch in the ACC position when programming HomeLink®. It is also recommended that a new battery be placed in the hand-held transmitter of the device being programmed to HomeLink® for quicker programming and accurate transmission of the radio-frequency.

1. Position the end of your hand-held transmitter 1–3 in (2–8 cm) away from the HomeLink® surface, keeping the HomeLink® indicator light ① in view.

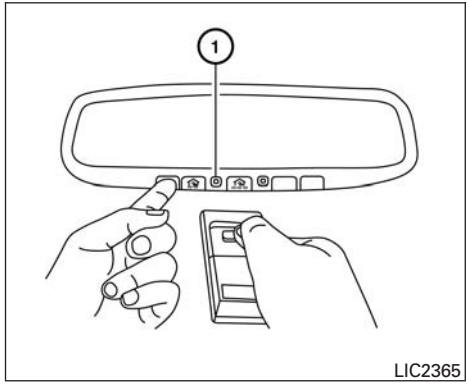

LIC2365

2. Using both hands, simultaneously press and hold the desired HomeLink® button and hand-held transmitter button. DO NOT release until the HomeLink® indicator light ① flashes slowly and then rapidly. When the indicator light flashes rapidly, both buttons may be released. (The rapid flashing indicates successful programming.)

NOTE:

Some devices may require you to replace Step 2 with the cycling procedure noted in "Programming HomeLink® for Canadian customers and gate openers" in this section.

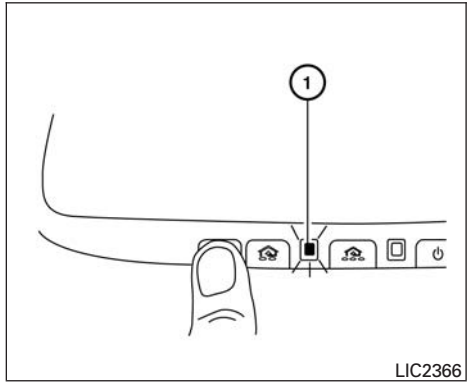

LIC2366

3. Press and hold the programmed HomeLink® button and observe the indicator light.
   - If the indicator light ① **is solid/continuous, programming is complete** and your device should activate when the HomeLink® button is pressed and released.
   - If the indicator light ① blinks **rapidly for 2 seconds and then turns to a solid/continuous light, continue with Steps 4-6** for a rolling code device. A second person may make the following steps easier. Use a ladder or other device.

Do not stand on your vehicle to perform the next steps.

4. At the receiver located on the garage door opener motor in the garage, locate the “learn” or “smart” button (the name and color of the button may vary by manufacturer but it is usually located near where the hanging antenna wire is attached to the unit). If there is difficulty locating the button, reference the garage door opener’s manual.
5. Press and release the “learn” or “smart” button.
6. Return to the vehicle and firmly press and hold the trained HomeLink® button for 2 seconds and release. Repeat the “press/hold/release” sequence up to three times to complete the training process. HomeLink® should now activate your rolling code equipped device.
7. If you have any questions or are having difficulty programming your HomeLink® buttons, refer to the HomeLink® web site at: www.homelink.com or call 1-800-355-3515.

PROGRAMMING HOMELINK® FOR CANADIAN CUSTOMERS AND GATE OPENERS

Canadian radio-frequency laws require transmitter signals to “time-out” (or quit) after several seconds of transmission – which may not be long enough for HomeLink® to pick up the signal during training. Similar to this Canadian law, some U.S. gate operators are designed to “time-out” in the same manner.

If you live in Canada or you are having difficulties training a gate operator **or** garage door opener by using the “Training” procedures, **replace** “Programming HomeLink®” **Step 2** with the following:

NOTE:

When programming a garage door opener, etc., unplug the device during the “cycling” process to prevent possible damage to the garage door opener components.

1. Refer to “Programming HomeLink®” step 1 in this section.
2. Using both hands, simultaneously press and hold the desired HomeLink® button and the hand-held transmitter button. During training, your hand-held transmitter may automatically stop transmitting. Continue to press and hold the desired HomeLink® button while you press and re-press (“cycle”) your hand-held transmitter every 2 seconds until the frequency signal has been learned. The HomeLink® indicator light will flash slowly and then rapidly after several seconds upon successful training. DO NOT release until the HomeLink® indicator light flashes slowly and then rapidly. When the indicator light flashes rapidly, both buttons may be released. The rapid flashing indicates successful training.
   Proceed with “Programming HomeLink®” step 3 to complete.
   If the device was unplugged during the programming procedure, remember to plug it back in when programming is completed.

OPERATING THE HOMELINK® UNIVERSAL TRANSCEIVER

The HomeLink® Universal Transceiver, after it is programmed, can be used to activate the programmed device. To operate, simply press and release the appropriate programmed HomeLink® Universal Transceiver button. The amber indicator light will illuminate while the signal is being transmitted.

For convenience, the hand-held transmitter of the device may also be used at any time.

PROGRAMMING TROUBLE-DIAGNOSIS

If the HomeLink® does not quickly learn the hand-held transmitter information:

- replace the hand-held transmitter batteries with new batteries.
- position the hand-held transmitter with its battery area facing away from the HomeLink® surface.
- press and hold both the HomeLink® and hand-held transmitter buttons without interruption.
- position the hand-held transmitter 1 - 3 in (26 - 76 mm) away from the HomeLink® surface. Hold the transmitter in that position for up to 15 seconds. If HomeLink® is not programmed within that time, try holding the transmitter in another position – keeping the indicator light in view at all times.

If you have any questions or are having difficulty programming your HomeLink® buttons, refer to the HomeLink® web site at: www.homelink.com or call 1-800-355-3515.

CLEARING THE PROGRAMMED INFORMATION

The following procedure clears the programmed information from both buttons. Individual buttons cannot be cleared. However, individual buttons can be reprogrammed. For additional information, refer to “Reprogramming a single HomeLink® button” in this section.

To clear all programming:

1. Press and hold the two outer HomeLink® buttons until the indicator light begins to flash in approximately 10 seconds. Do not hold for longer than 20 seconds.
2. Release both buttons.

HomeLink® is now in the programming mode and can be programmed at any time beginning with “Programming HomeLink®” - Step 1.

REPROGRAMMING A SINGLE HOMELINK® BUTTON

To reprogram a HomeLink® Universal Transceiver button, complete the following:

1. Press and hold the desired HomeLink® button. **DO NOT** release the button.
2. The indicator light will begin to flash after 20 seconds. Without releasing the HomeLink® button, proceed with “Programming HomeLink®” - Step 1.

For questions or comments, contact HomeLink® at: www.homelink.com or 1–800–355–3515 (except Mexico).

The HomeLink® Universal Transceiver button has now been reprogrammed. The new device can be activated by pushing the HomeLink® button that was just programmed. This procedure will not affect any other programmed HomeLink® buttons.

IF YOUR VEHICLE IS STOLEN

If your vehicle is stolen, you should change the codes of any non-rolling code device that has been programmed into HomeLink®. Consult the Owner’s Manual of each device or call the manufacturer or dealer of those devices for additional information.

When your vehicle is recovered, you will need to reprogram the HomeLink® Universal Transceiver with your new transmitter information.

FCC Notice:

For USA:

This device complies with Part 15 of the FCC Rules. Operation is subject to the following two conditions: (1) This device may not cause interference, and (2) this device must accept any interference received, including interference that may cause undesired operation.

NOTE:

Changes or modifications not expressly approved by the party responsible for compliance could void the user's authority to operate the equipment.

For Canada:

This device complies with Industry Canada licence-exempt RSS standard(s). Operation is subject to the following two conditions: (1) this device may not cause interference, and (2) this device must accept any interference, including interference that may cause undesired operation of the device.

MEMO

3 Pre-driving checks and adjustments

Keys 3-2
NISSAN Intelligent Key® 3-2
NISSAN Vehicle Immobilizer System keys 3-4
Doors 3-5
Locking with key. 3-5
Locking with inside lock knob 3-6
Locking with power door lock switch 3-6
Automatic door locks 3-6
Child safety rear door lock. 3-7
NISSAN Intelligent Key® 3-7
Operating range. 3-9
Door locks/unlocks precaution 3-10
NISSAN Intelligent Key® Operation 3-10
How to use the remote keyless entry function 3-14
Warning signals 3-17
Troubleshooting guide 3-18
Remote Engine Start (if so equipped) 3-20
Remote engine start operating range 3-20
Remote starting the vehicle 3-20
Extending engine run time 3-21
Canceling a remote start 3-21
Conditions the remote start will not work 3-21
Hood 3-22
Liftgate 3-23
Operating the manual liftgate (if so equipped) 3-23
Operating the power liftgate (if so equipped) 3-23
Power liftgate main switch 3-27
Liftgate release. 3-27
Liftgate position setting 3-28
Fuel-filler door 3-28
Opening the fuel-filler door 3-28
Fuel-filler cap 3-29
Tilt/telescopic steering 3-31
Manual operation (if so equipped) 3-31
Automatic operation (if so equipped). 3-31
Sun visors 3-32
Vanity mirrors 3-33
Mirrors 3-33
Automatic anti-glare rearview mirror 3-33
Outside mirrors 3-35
Automatic drive positioner (if so equipped) 3-36
Memory storage function 3-36
Entry/exit function 3-38
Setting memory function. 3-39
System operation. 3-39

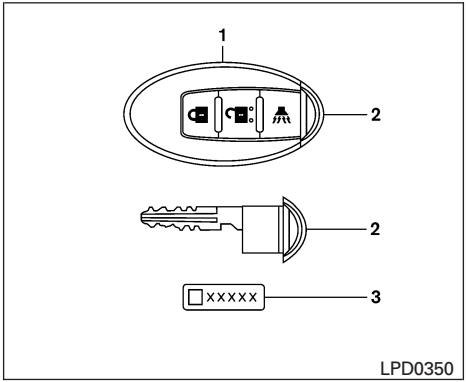

Type A (if so equipped)

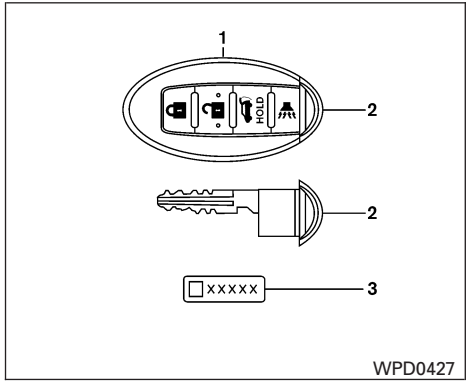

Type B (if so equipped)

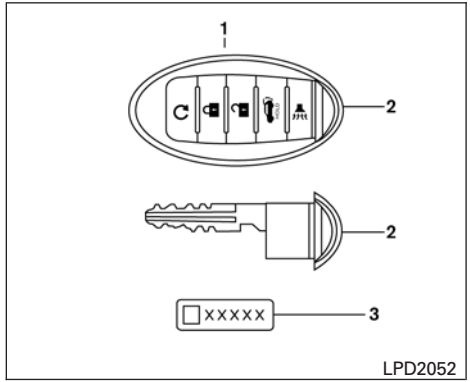

Type C (if so equipped)

1. Intelligent Key (2 sets)
2. Mechanical key
3. Key number plate (1 plate)

NISSAN INTELLIGENT KEY®

Your vehicle can only be driven with the Intelligent Keys which are registered to your vehicle's Intelligent Key system components and NISSAN Vehicle Immobilizer System components. As many as 4 Intelligent Keys can be registered and used with one vehicle. The new keys must be registered by a NISSAN dealer prior to use with the Intelligent Key system and NISSAN Vehicle Immobilizer System of your vehicle. Since the registration process requires erasing all memory in the Intelligent Key components when registering new keys, be sure to take all Intelligent Keys that you have to the NISSAN dealer.

A key number plate is supplied with your keys. Record the key number and keep it in a safe place (such as your wallet), not in the vehicle. If you lose your keys, see a NISSAN dealer for duplicates by using the key number. NISSAN does not record key numbers so it is very important to keep track of your key number plate.

A key number is only necessary when you have lost all keys and do not have one to duplicate from. If you still have a key, your NISSAN dealer can duplicate it.

⚠ CAUTION

Listed below are conditions or occurrences which will damage the Intelligent Key:

- **Do not allow the Intelligent Key, which contains electrical components, to come into contact with water or salt water. This could affect the system function.**
- **Do not drop the Intelligent Key.**
- **Do not strike the Intelligent Key sharply against another object.**
- **Do not change or modify the Intelligent Key.**
- **Wetting may damage the Intelligent Key. If the Intelligent Key gets wet, immediately wipe until it is completely dry.**
- **Do not place the Intelligent Key for an extended period in an area where temperatures exceed 140°F (60°C).**
- **Do not attach the Intelligent Key with a key holder that contains a magnet.**
- **Do not place the Intelligent Key near equipment that produces a magnetic field, such as a TV, audio equipment and personal computers.**

If an Intelligent Key is lost or stolen, NISSAN recommends erasing the ID code of that Intelligent Key from the vehicle. This may prevent the unauthorized use of the Intelligent Key to operate the vehicle. For information regarding the erasing procedure, contact a NISSAN dealer.

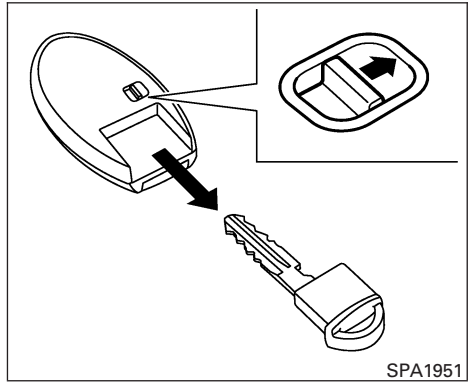

Mechanical key

The Intelligent Key contains the mechanical key.

To remove the mechanical key, release the lock knob on the back of the Intelligent Key.

To install the mechanical key, firmly insert it into the Intelligent Key until the lock knob returns to the lock position.

Use the mechanical key to lock or unlock the driver's door and glove box.

⚠ CAUTION

Always carry the mechanical key installed in the Intelligent Key slot.

For additional information, refer to “Doors” in this section and “Storage” in the “Instruments and controls” section of this manual.

Valet hand-off

When you have to leave a key with a valet, give them the Intelligent Key itself and keep the mechanical key with you to protect your belongings.

To prevent the glove box from being opened during valet hand-off, follow the procedure below.

1. Remove the mechanical key from the Intelligent Key.
2. Lock the glove box with the mechanical key.
3. Hand the Intelligent Key to the valet and keep the mechanical key with you.

For additional information, refer to “Storage” in the “Instruments and controls” section of this manual.

NISSAN VEHICLE IMMOBILIZER SYSTEM KEYS

You can only drive your vehicle using the master or valet keys which are registered to the NISSAN Vehicle Immobilizer System components in your vehicle. These keys have a transponder chip in the key head.

The master key can be used for all the locks.

The valet key cannot be used for the glove box lock.

To protect your belongings when you leave a key with someone, give them the valet key only.

Never leave these keys in the vehicle.

Additional or replacement keys:

If you still have a key, the key number is not necessary when you need extra NISSAN Vehicle Immobilizer System keys. Your dealer can duplicate your existing key. As many as 4 NISSAN Vehicle Immobilizer System keys can be used with one vehicle. You should bring all NISSAN Vehicle Immobilizer System keys that you have to your NISSAN dealer for registration. This is because the registration process will erase the memory of all key codes previously registered into the NISSAN Vehicle Immobilizer System. After the registration process, these components will only recognize keys coded into the NISSAN Vehicle Immobilizer System during registration. Any key that is not given to your dealer at the time of registration will no longer be able to start your vehicle.

⚠ CAUTION

Do not allow the immobilizer system key, which contains an electrical transponder, to come into contact with water or salt water. This could affect system function.

When the doors are locked using one of the following methods, the doors cannot be opened using the inside or outside door handles. The doors must be unlocked to open the doors.

⚠ WARNING

- **Always have the doors locked while driving. Along with the use of seat belts, this provides greater safety in the event of an accident by helping to prevent persons from being thrown from the vehicle. This also helps keep children and others from unintentionally opening the doors, and will help keep out intruders.**
- **Before opening any door, always look for and avoid oncoming traffic.**
- **Do not leave children unattended inside the vehicle. They could unknowingly activate switches or controls. Unattended children could become involved in serious accidents.**

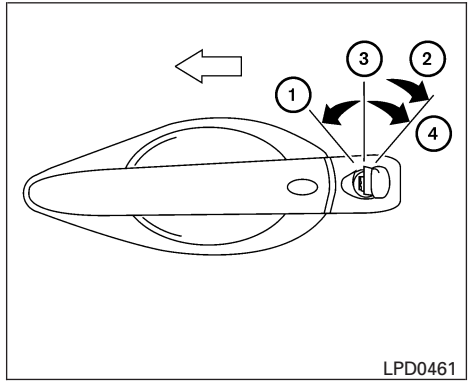

Driver's side

LOCKING WITH KEY

The power door lock system allows you to lock or unlock all doors at the same time.

Turning the key toward the front ① of the vehicle locks all doors.

Turning the key one time toward the rear ② of the vehicle unlocks that door. From that position, returning the key to neutral ③ (where the key can only be removed and inserted) and turning it toward the rear again ④ within 5 seconds unlocks all doors.

Opening and closing windows

The driver's door key operation allows you to open and close windows equipped with automatic operation at the same time.

- To open the windows, turn the driver's door key toward the rear of the vehicle for **longer than 1 second** after the door is unlocked.
- To close the windows, turn the driver's door key toward the front of the vehicle for **longer than 1 second** after the door is locked.

Windows stop when the key cylinder is released.

NOTE:

When the window lock button is pressed the key will not operate the window open or close function.

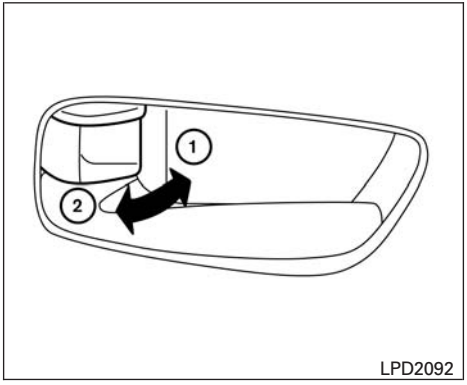

Inside lock

LOCKING WITH INSIDE LOCK KNOB

To lock the door without the key, move the inside lock knob to the lock position ①, then close the door.

To unlock the door without the key, move the inside lock knob to the unlock position ②.

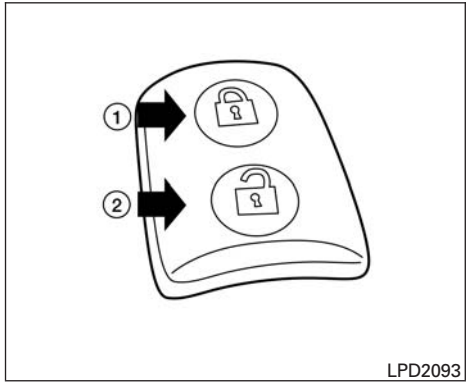

LOCKING WITH POWER DOOR LOCK SWITCH

To lock all the doors without a key, push the door lock switch (driver's or front passenger's side) to the lock position ①. When locking the door this way, be certain not to leave the key inside the vehicle.

To unlock all the doors without a key, push the door lock switch (driver's or front passenger's side) to the unlock position ②.

Lockout protection

When the power door lock switch is moved to the lock position and any door is open, all doors will lock and unlock automatically. With the Intelligent Key left in the vehicle and any door open, all doors will unlock automatically and a chime will sound after the door is closed.

These functions help to prevent the Intelligent Key from being accidentally locked inside the vehicle.

AUTOMATIC DOOR LOCKS

- All doors lock automatically when the vehicle speed reaches 15 MPH (24 km/h).
- All doors unlock automatically when the ignition is placed in the OFF position.

The automatic unlock function can be deactivated or activated. To deactivate or activate the automatic door unlock system, perform the following procedure:

1. Close all doors.
2. Place the ignition switch in the ON position.
3. Within 20 seconds of performing Step 2, push and hold the power door lock switch to the 🔓 position (UNLOCK) for more than 5 seconds.

4. When activated, the hazard indicator will flash twice. When deactivated, the hazard indicator will flash once.
5. The ignition switch must be placed in the OFF and ON position again between each setting change.

When the automatic door unlock system is deactivated, the doors do not unlock when the ignition switch is placed in the OFF position. To unlock the door manually, use the inside lock knob or the power door lock switch (driver's or front passenger's side).

NOTE:

The automatic door unlock function can be changed using the Vehicle Settings in the vehicle information display. The "Auto Door Unlock" choices are:

- Off
- IGN OFF
- Shift into P

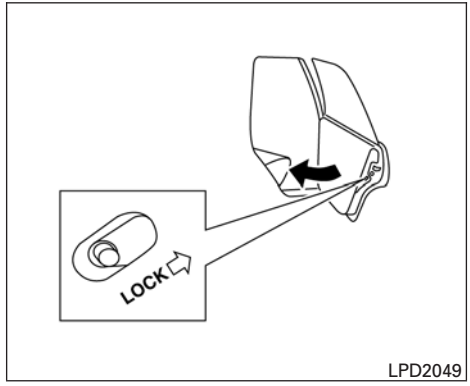

CHILD SAFETY REAR DOOR LOCK

Child safety locks help prevent the rear doors from being opened accidentally, especially when small children are in the vehicle.

The child safety lock levers are located on the edge of the rear doors.

When the lever is in the LOCK position, the door can be opened only from the outside.

⚠ WARNING

- **Radio waves could adversely affect electric medical equipment. Those who use a pacemaker should contact the electric medical equipment manufacturer for the possible influences before use.**
- **The Intelligent Key transmits radio waves when the buttons are pressed. The FAA advises the radio waves may affect aircraft navigation and communication systems. Do not operate the Intelligent Key while on an airplane. Make sure the buttons are not operated unintentionally when the unit is stored for a flight.**

The Intelligent Key system can operate all the door locks using the remote control function or pushing the request switch on the vehicle without taking the key out from a pocket or purse. The operating environment and/or conditions may affect the Intelligent Key system operation.

Be sure to read the following before using the Intelligent Key system.

⚠ CAUTION

- **Be sure to carry the Intelligent Key with you when operating the vehicle.**
- **Never leave the Intelligent Key in the vehicle when you leave the vehicle.**

The Intelligent Key is always communicating with the vehicle as it receives radio waves. The Intelligent Key system transmits weak radio waves. Environmental conditions may interfere with the operation of the Intelligent Key system under the following operating conditions:

- When operating near a location where strong radio waves are transmitted, such as a TV tower, power station and broadcasting station.
- When in possession of wireless equipment, such as a cellular telephone, transceiver, and CB radio.
- When the Intelligent Key is in contact with or covered by metallic materials.
- When any type of radio wave remote control is used nearby.
- When the Intelligent Key is placed near an electric appliance such as a personal computer.
- When the vehicle is parked near a parking meter.

In such cases, correct the operating conditions before using the Intelligent Key function or use the mechanical key.

Although the life of the battery varies depending on the operating conditions, the battery's life is approximately 2 years. If the battery is discharged, replace it with a new one.

When the Intelligent Key battery is low, an indicator illuminates in the Vehicle Information Display. For additional information, refer to "Vehicle Information Display" in the "Instruments and controls" section of this manual.

Since the Intelligent Key is continuously receiving radio waves, if the key is left near equipment which transmits strong radio waves, such as signals from a TV and personal computer, the battery life may become shorter.

For additional information regarding replacement of a battery, refer to "Battery replacement" in the "Maintenance and do-it-yourself" section of this manual.

As many as 4 Intelligent Keys can be registered and used with one vehicle. For information about the purchase and use of additional Intelligent Keys, contact a NISSAN dealer.

⚠ CAUTION

Listed below are conditions or occurrences which will damage the Intelligent Key:

- **Do not allow the Intelligent Key, which contains electrical components, to come into contact with water or salt water. This could affect the system function.**
- **Do not drop the Intelligent Key.**
- **Do not strike the Intelligent Key sharply against another object.**
- **Do not change or modify the Intelligent Key.**
- **Wetting may damage the Intelligent Key. If the Intelligent Key gets wet, immediately wipe until it is completely dry.**
- **Do not place the Intelligent Key for an extended period in an area where temperatures exceed 140°F (60°C).**
- **Do not attach the Intelligent Key with a key holder that contains a magnet.**
- **Do not place the Intelligent Key near equipment that produces a magnetic field, such as a TV, audio equipment and personal computers.**

If an Intelligent Key is lost or stolen, NISSAN recommends erasing the ID code of that Intelligent Key from the vehicle. This may prevent the unauthorized use of the Intelligent Key to operate the vehicle. For information regarding the erasing procedure, contact a NISSAN dealer.

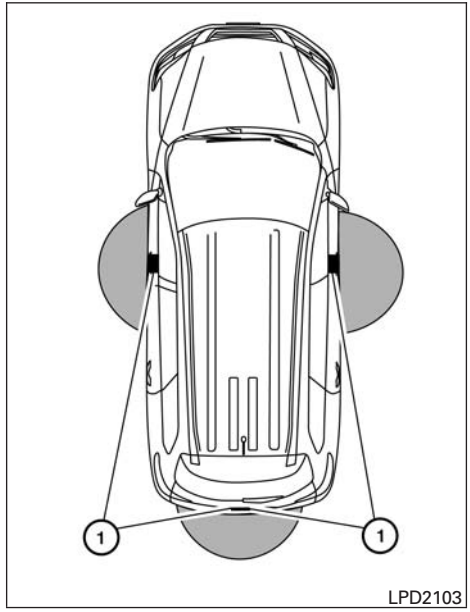

OPERATING RANGE

The Intelligent Key functions can only be used when the Intelligent Key is within the specified operating range from the request switch ①.

When the Intelligent Key battery is discharged or strong radio waves are present near the operating location, the Intelligent Key operating range becomes narrower, and the Intelligent Key may not function properly.

The operating range is within 31.5 in (80 cm) from each request switch ①.

If the Intelligent Key is too close to the door glass, handle or rear bumper, the request switches may not function.

When the Intelligent Key is within the operating range, it is possible for anyone, even someone who does not carry the Intelligent Key, to push the request switch to lock/unlock the doors.

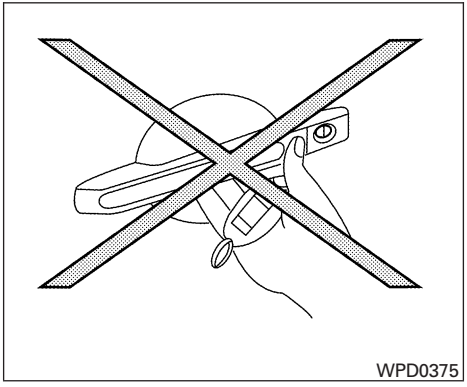
WPD0375

DOOR LOCKS/UNLOCKS PRECAUTION

- Do not push the door handle request switch with the Intelligent Key held in your hand as illustrated. The close distance to the door handle will cause the Intelligent Key system to have difficulty recognizing that the Intelligent Key is outside the vehicle.
- After locking with the door handle request switch, verify the doors are securely locked by testing them.
- To prevent the Intelligent Key from being left inside the vehicle, make sure you carry the Intelligent Key with you and then lock the doors.
- Do not pull the door handle before pushing the door handle request switch. The door will be unlocked but will not open. Release the door handle once and pull it again to open the door.

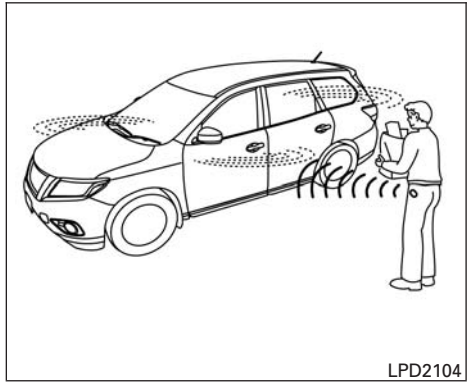
LPD2104

NISSAN INTELLIGENT KEY® OPERATION

You can lock or unlock the doors without taking the Intelligent Key out of your pocket or bag.

When you carry the Intelligent Key with you, you can lock or unlock all doors by pushing the door handle request switch within the range of operation.

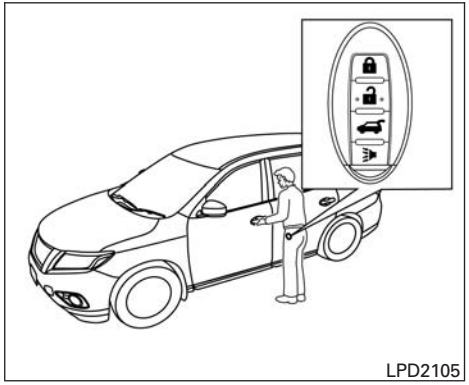
LPD2105

Locking doors

1. Move the shift lever to the P (Park) position, place the ignition switch in the LOCK position and make sure you carry the Intelligent Key with you.
2. Close all doors.
3. Push any door handle request switch while carrying the Intelligent Key with you.
4. All doors and the rear liftgate will lock.
5. The hazard warning lights flash twice and the outside buzzer sounds once.

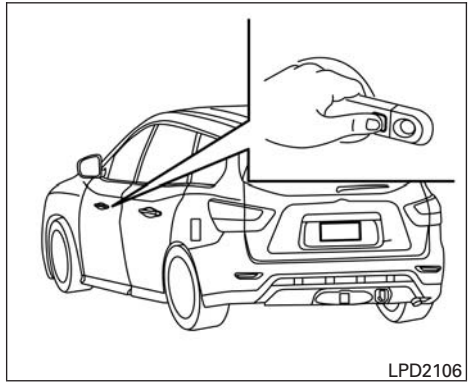
LPD2106

NOTE:

- **Request switches for all doors and liftgate can be deactivated when the I-Key Door Lock setting is switched to OFF in the Vehicle Settings of the vehicle information display. For additional information, refer to "Vehicle information display" in the "Instruments and controls" section of this manual.**

- Doors lock with the door handle request switch while the ignition switch is not in the LOCK position.
- Doors do not lock by pushing the door handle request switch while any door is open. However, doors lock with the mechanical key even if any door is open.
- Doors do not lock with the door handle request switch with the Intelligent Key inside the vehicle and a beep sounds to warn you. However, when an Intelligent Key is inside the vehicle, doors can be locked with another Intelligent Key.

⚠ CAUTION

- **After locking the doors using the request switch, make sure that the doors have been securely locked by operating the door handles or the rear liftgate opener switch.**
- **When locking the doors using the request switch, make sure to have the Intelligent Key in your possession before operating the request switch to prevent the Intelligent Key from being left in the vehicle.**
- **The request switch is operational only when the Intelligent Key has been detected by the Intelligent Key system.**

Lockout protection

To prevent the Intelligent Key from being accidentally locked in the vehicle, lockout protection is equipped with the Intelligent Key system.

When the driver's side door is open, the doors are locked, and then the Intelligent Key is put inside the vehicle and all the doors are closed; the lock will automatically unlock and the door buzzer sounds.

NOTE:

The doors may not lock when the Intelligent Key is in the same hand that is operating the request switch to lock the door. Put the Intelligent Key in a purse, pocket or your other hand.

⚠ CAUTION

The lockout protection may not function under the following conditions:

- **When the Intelligent Key is placed on top of the instrument panel.**
- **When the Intelligent Key is placed inside the glove box or a storage bin.**
- **When the Intelligent Key is placed inside the door pockets.**
- **When the Intelligent Key is placed inside or near metallic materials.**

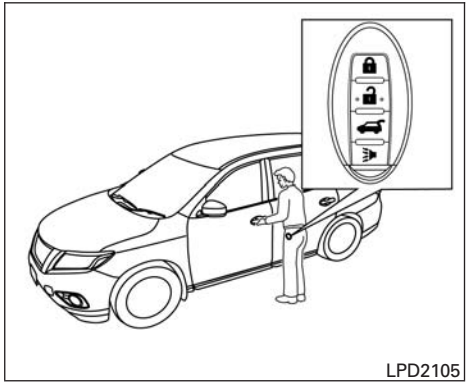
LPD2105

Unlocking doors

1. Carry the Intelligent Key.
2. Push the door handle request switch.
3. The hazard warning lights flash once and the outside buzzer sounds once.
4. Push the door handle request switch again within 1 minute to unlock all doors.

For power liftgate opening:

1. Carry the Intelligent Key.
2. Press the power liftgate request switch.

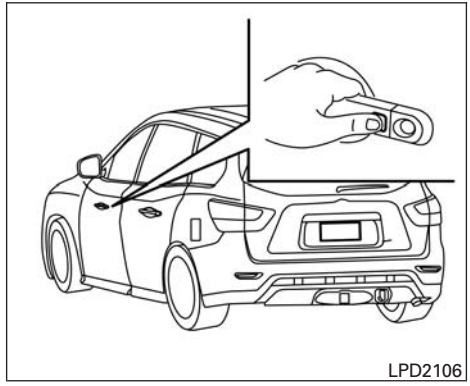
LPD2106

NOTE:

Request switches for all doors and liftgate can be deactivated when the I-Key Door Lock setting is switched to OFF in the Vehicle Settings of the vehicle information display. For additional information, refer to "Vehicle information display" in the "Instruments and controls" section of this manual.

If a door handle is pulled while unlocking the doors, that door may not be unlocked. Returning the door handle to its original position will unlock the door. If the door does not unlock after returning the door handle, push the door handle request switch to unlock the door.

All doors will be locked automatically unless one of the following operations is performed within 1 minute after pushing the request switch.

- Opening any door.
- Pushing the ignition switch.

The interior light timer illuminates for a period of time when a door is unlocked and the room light switch is in the DOOR position.

The interior light can be turned off without waiting by performing one of the following operations:

- Placing the ignition switch in the ON position.
- Locking the doors with the remote control.
- Switching the room light switch to the OFF position.
- Switching the Auto Room Lamp to the OFF position in Vehicle Settings of the vehicle information display. For additional information, refer to "Vehicle information display" in the "Instruments and controls" section of this manual.

HOW TO USE THE REMOTE KEYLESS ENTRY FUNCTION

The remote keyless entry function can operate all door locks using the remote keyless function of the Intelligent Key. The remote keyless function can operate at a distance of 33 ft (10 m) away from the vehicle. The operating distance depends upon the conditions around the vehicle.

The remote keyless entry function will not function under the following conditions:

- When the Intelligent Key is not within the operational range.
- When the doors or the rear liftgate are open or not closed securely.
- When the Intelligent Key battery is discharged.

⚠ CAUTION

When locking the doors using the Intelligent Key, be sure not to leave the key in the vehicle.

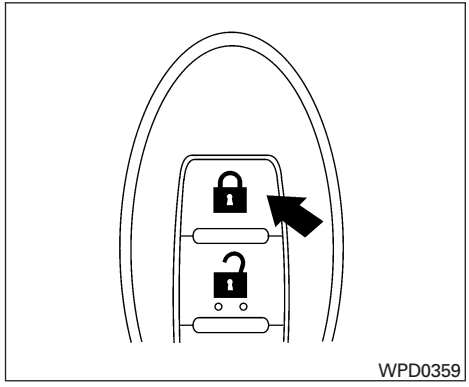

Locking doors

1. Place the ignition switch in the LOCK position.
2. Close all doors.
3. Press the 🔒 button on the Intelligent Key.
4. The hazard warning lights flash twice and the horn beeps once.
5. All doors will be locked.

⚠ CAUTION

After locking the doors using the Intelligent Key, be sure that the doors have been securely locked by operating the door handles.

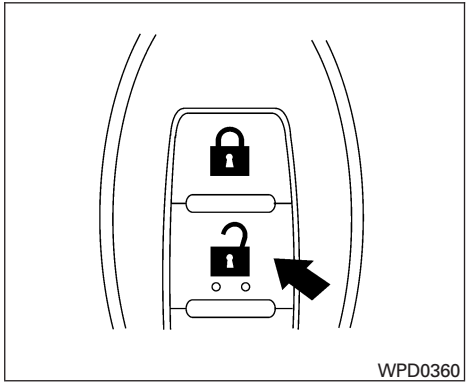

Unlocking doors

1. Press the button on the Intelligent Key.
2. The hazard warning lights flash once.
3. Press the button again within 5 seconds to unlock all doors.

NOTE:

The unlocking operation can be changed in Selective door unlock in the Vehicle Settings of the vehicle information display. For additional information, refer to "Vehicle information display" in the "Instruments and controls" section of this manual.

All doors will be locked automatically unless one of the following operations is performed within 1 minute after pressing the button:

- Opening any doors.
- Pushing the ignition switch.

The interior light illuminates for a period of time when a door is unlocked and the room light switch is in the DOOR position.

The light can be turned off without waiting by performing one of the following operations:

- Placing the ignition switch in the ON position.
- Locking the doors with the Intelligent Key.
- Switching the room light switch to the OFF position.
- Switching the Auto Room Lamp to the OFF position in Vehicle Settings of the vehicle information display. For additional information, refer to "Vehicle information display" in the "Instruments and controls" section of this manual.

Opening windows

The Intelligent Key allows you to simultaneously open windows equipped with automatic operation.

- To open the windows, press the button on the Intelligent Key for **longer than 3 seconds** after all doors are unlocked.

The door windows will open while pressing the button on the Intelligent Key.

The door windows cannot be closed by using the Intelligent Key.

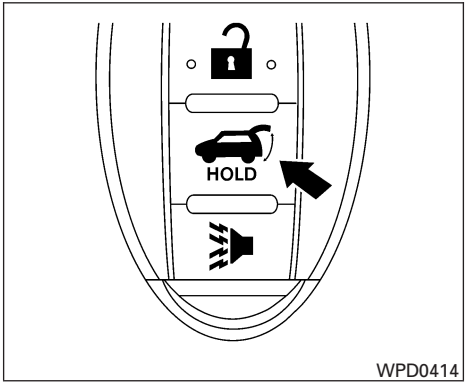

Releasing the rear liftgate (if so equipped)

The rear liftgate can be opened and closed by performing the following:

- Press the button for longer than 0.5 seconds to open the rear liftgate.
- Press the button again for longer than 0.5 seconds to close the rear liftgate.

When the button is pressed during the open or close process the liftgate will reverse.

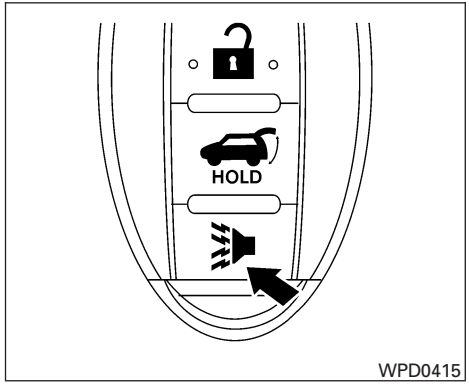

Using the panic alarm

If you are near your vehicle and feel threatened, you may activate the panic alarm to call attention by pressing and holding the button on the Intelligent Key for **longer than 0.5 seconds.**

The panic alarm and headlights will stay on for a period of time.

The panic alarm stops when:

- It has run for a period of time, or
- Any button is pressed on the Intelligent Key.
- The request switch on the driver or passenger door is pushed and the Intelligent Key is in range of the door handle.

Linking the key fob to automatic drive positioner memory (if so equipped)

If the vehicle is equipped with automatic drive positioner, the key fob can be linked to a memory setting.

For additional information, refer to “Automatic drive positioner” in this section.

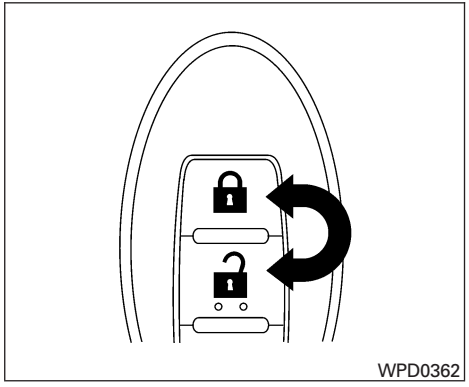

Answer back horn feature

If desired, the answer back horn feature can be deactivated using the Intelligent Key. When deactivated and the LOCK button is pushed, the hazard indicator lights flash twice. When the UNLOCK button is pushed, neither the hazard indicator lights nor the horn operates.

NOTE:

If you change the answer back horn and light flash feature with the Intelligent Key, the vehicle information display screen will show the current mode after the ignition switch has been cycled from the OFF to the ON position. The vehicle information display screen can also be used to change the answer back horn mode. For additional information, refer to "Answer back horn" in the "Instruments and controls" section of this manual.

To deactivate: Press and hold the and buttons **for at least 2 seconds.**

The hazard warning lights will flash 3 times to confirm that the answer back horn feature has been deactivated.

To activate: Press and hold the and buttons **for at least 2 seconds once more.**

The hazard warning lights will flash once and the horn will sound once to confirm that the horn beep feature has been reactivated.

Deactivating the horn beep feature does not silence the horn if the alarm is triggered.

WARNING SIGNALS

To help prevent the vehicle from moving unexpectedly by erroneous operation of the Intelligent Key or to help prevent the vehicle from being stolen, a chime or buzzer sounds from inside and outside the vehicle and a warning is displayed in the instrument panel.

When a chime or beep sounds or a warning is displayed, be sure to check the vehicle and the Intelligent Key.

For additional information, refer to the "Troubleshooting guide" in this section and "Vehicle information display" in the "Instruments and controls" section of this manual.

TROUBLESHOOTING GUIDE

Verify the location of all Intelligent Keys that are programmed for the vehicle. If another Intelligent Key is in range or inside the vehicle, the vehicle system may respond differently than expected.

Symptom		Possible Cause	Remedy
When stopping the engine	The Shift to Park warning appears on the display and the inside warning chime sounds continuously.	The shift lever is not in the P (Park) position.	Move the shift lever to the P (Park) position.
When shifting the shift lever to the P (Park) position	The Push ignition to OFF warning appears in the display.	The ignition switch is in the ACC or ON position.	Place the ignition switch in the OFF position.
When opening the driver's door to get out of the vehicle	The Door Open warning appears on the display and the inside warning chime sounds continuously.	The ignition switch is in the ACC or ON position.	Place the ignition switch in the OFF position.
When closing the door after getting out of the vehicle	The No Key Detected warning appears on the display, the outside chime sounds 3 times and the inside warning chime sounds for approximately 3 seconds.	The ignition switch is in the ACC or ON position.	Place the ignition switch in the OFF position.
	The Shift to Park warning appears on the display and the outside chime sounds continuously.	The ignition switch is in the ACC position and the shift lever is not in the P (Park) position.	Move the shift lever to the P (Park) position and place the ignition switch in the OFF position.
When closing the door with the inside lock knob turned to LOCK	The outside chime sounds for approximately 3 seconds and all the doors unlock.	The Intelligent Key is inside the vehicle.	Carry the Intelligent Key with you.
When pushing the door handle request switch or the LOCK button on the Intelligent Key to lock the door	The outside chime sounds for approximately 2 seconds.	The Intelligent Key is inside the vehicle.	Carry the Intelligent Key with you.

Symptom		Possible Cause	Remedy
When pushing the ignition switch to start the engine	The Intelligent Key battery indicator appears on the display.	The battery charge is low.	Replace the battery with a new one. For additional information, refer to “Battery replacement” in the “Maintenance and do-it-yourself” section of this manual.
	The No Key Detected warning appears on the display, the outside chime sounds 3 times and the inside warning chime sounds for approximately 3 seconds.	The Intelligent Key is not in the vehicle.	Carry the Intelligent Key with you.
When pushing the ignition switch	The Intelligent Key system warning light in the meter illuminates in yellow.	It warns of a malfunction with the Intelligent Key system.	Contact a NISSAN dealer.

REMOTE ENGINE START (if so equipped)

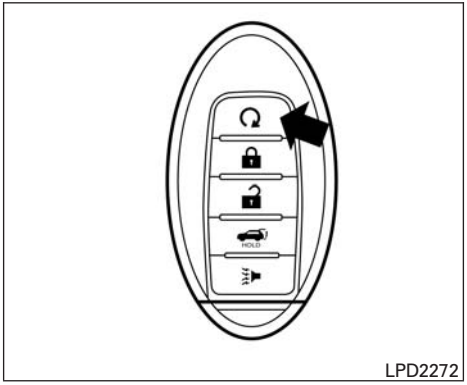

LPD2272

The button will be on the NISSAN Intelligent Key® if the vehicle has remote engine start. This feature allows the engine to start from outside the vehicle.

The following features may be affected when the remote start feature is used:

- Vehicles with manual or automatic climate control systems will default to the last used heating or cooling mode.
- Vehicles equipped with heated seats may have this feature come on during a remote start. For additional information, refer to "Heated seats" in the "Instruments and controls" section.

Laws in some local communities may restrict the use of remote starters. For example, some laws require a person using remote start to have the vehicle in view. Check local regulations for any requirements.

Other conditions may affect the function of the Remote Engine Start feature. For additional information, refer to "Conditions the remote start will not work" in this section.

Other conditions can affect the performance of the Intelligent Key transmitter. For additional information, refer to "NISSAN Intelligent Key®" in this section.

REMOTE ENGINE START OPERATING RANGE

The remote engine start function can only be used when the Intelligent Key is within the specified operating range from the vehicle.

When the Intelligent Key battery is discharged or strong radio waves are present near the operating location, the Intelligent Key operating range becomes narrower, and the Intelligent Key may not function properly.

The remote engine start operating range is approximately 197 ft (60 m) from the vehicle.

REMOTE STARTING THE VEHICLE

To use the remote start feature to start the engine perform the following:

1. Aim the Intelligent Key at the vehicle.
2. Press the LOCK button to lock all doors.
3. Within 5 seconds press and hold the remote start button until the turn signal lights flash and the tail lamps turn on. If the vehicle is not within view press and hold the remote start button for at least 2 seconds.

The following events will occur when the engine starts:

- The parking lights will turn on and remain on as long as the engine is running.
- The doors will be locked and the climate control system may come on.
- The engine will continue to run for 10 minutes. Repeat the steps to extend the time for an additional ten minutes. For additional information, refer to "Extending engine run time" in this section.

Depress and hold the brake then press the push-button ignition switch to the ON position before driving. For additional information, refer to "Driving the vehicle" in the "Starting and driving" section of this manual.

EXTENDING ENGINE RUN TIME

The remote start feature can be extended one time by performing the steps listed in “Remote starting the vehicle” in this section. Run time will be calculated as follows:

- The first 10 minute run time will start when the remote start function is performed.
- The second 10 minutes will start immediately when the remote start function is performed again. For example, if the engine has been running for 5 minutes, and 10 minutes are added, the engine will run for a total of 15 minutes.
- Extending engine run time will bring you to the 2 remote start limit.

A maximum of 2 remote starts, or a single start with an extension, are allowed between ignition cycles.

The ignition switch must be cycled to the ON position and then back to the OFF position before the remote start procedure can be used again.

CANCELING A REMOTE START

To cancel a remote start, perform one of the following:

- Aim the Intelligent Key at the vehicle and press until the parking lights turn off.
- Turn on the hazard warning flashers.
- Cycle the ignition switch ON and then OFF.
- The extended engine run time has expired.
- The first 10 minute timer has expired.
- The engine hood has been opened.
- The shift lever is moved out of park.
- The alarm sounds due to illegal entry into the vehicle.
- The ignition switch is pushed without an Intelligent Key in the vehicle.
- The ignition switch is pushed with an Intelligent Key in the vehicle but the brake pedal is not depressed.

CONDITIONS THE REMOTE START WILL NOT WORK

The remote start will not operate if any of the following conditions are present:

- The ignition switch is placed in the ON position.
- The hood is not securely closed.
- The hazard warning lights are on.
- The engine is still running. The engine must be completely stopped. Wait at least 6 seconds if the engine goes from running to off. This is not applicable when extending engine run time.
- The remote start button is not pressed and held for at least 2 seconds.
- The remote start button is not pressed and held within 5 seconds of pressing the lock button.
- The brake is pressed.
- The doors are not closed and locked.
- The trunk or back door is open.
- The I–Key Indicator Light remains solid in the vehicle information display.

- The alarm sounds due to illegal entry into the vehicle.
- Two remote vehicle starts, or a single remote start with an extension, have already been used.
- The vehicle is not in P (Park).
- There is a detected registered key already inside of the vehicle.
- The Remote Start function has been switched to the OFF position in Vehicle Settings of the vehicle information display. For additional information, refer to “Vehicle information display” in the “Instruments and controls” section of this manual.

The remote engine start may display a warning or indicator in the vehicle information display. For additional information and an explanation of the warning or indicator, refer to “Vehicle information display” in the “Instruments and controls” section of this manual.

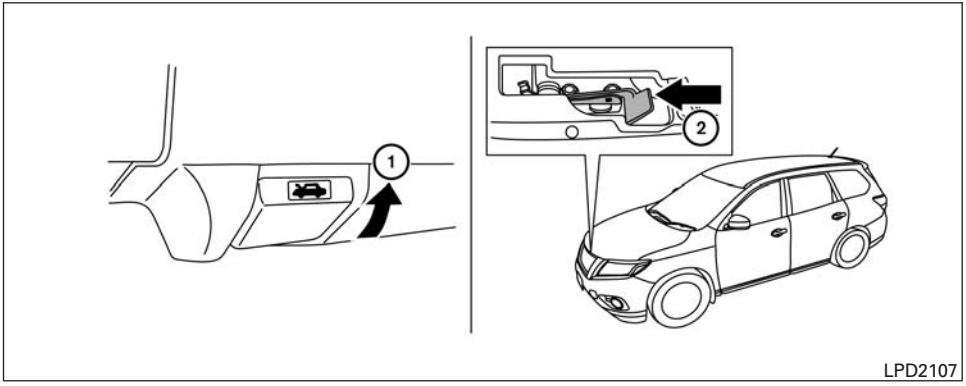

LPD2107

① Pull the hood lock release handle located below the driver side instrument panel. The hood will spring up slightly.

② Push the lever at the front of the hood to the side as illustrated with your fingertips and raise the hood.

When closing the hood, lower it slowly and make sure it locks into place.

⚠ WARNING

- **Make sure the hood is completely closed and latched before driving. Failure to do so could cause the hood to fly open and result in an accident.**
- **If you see steam or smoke coming from the engine compartment, to avoid injury do not open the hood.**

⚠ WARNING

- **Always be sure the liftgate has been closed securely to prevent it from opening while driving.**
- **Do not drive with the liftgate open. This could allow dangerous exhaust gases to be drawn into the vehicle. For additional information, refer to "Exhaust gas (carbon monoxide)" in the "Starting and driving" section of this manual.**
- **Do not leave children unattended inside the vehicle. They could unknowingly activate switches or controls. Unattended children could become involved in serious accidents.**
- **Always be sure that hands and feet are clear of the door frame to avoid injury while closing the liftgate.**

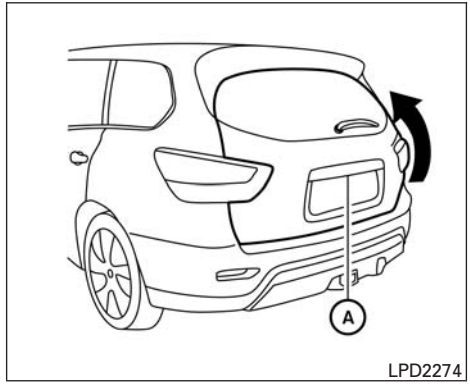

LPD2274

OPERATING THE MANUAL LIFTGATE (if so equipped)

The power door lock system allows you to lock or unlock all doors including the liftgate simultaneously.

To open the liftgate, press the request switch Ⓐ and pull up on the handle.

To close, lower and push the liftgate down securely.

OPERATING THE POWER LIFTGATE (if so equipped)

⚠ WARNING

- **Make sure that all passengers have their hands, etc., inside the vehicle before closing the liftgate.**
- **Do not leave children unattended inside the vehicle. They could unknowingly activate switches or controls. Unattended children could become involved in serious accidents.**

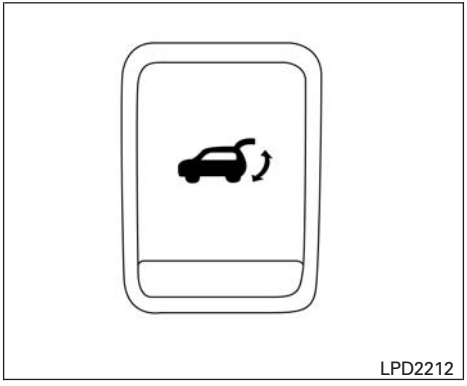

Instrument panel switch

NOTE:

To open, close or reverse the power liftgate, the shift lever must be in P (Park). Also, the power liftgate will not operate if battery voltage is low.

Power Open:
The power liftgate automatically moves from the fully closed position to the fully open position in approximately 5 – 8 seconds. The power open feature can be activated by the switch on the key fob, the instrument panel switch and the liftgate open switch. The hazard lights flash and a chime sounds to indicate the power open sequence has been started.

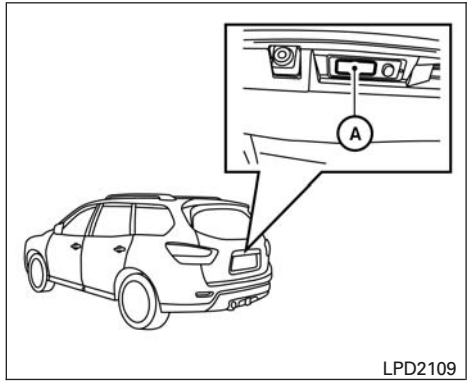

Liftgate opener switch

- When the vehicle is locked, the liftgate can be opened by the instrument panel switch, key fob and liftgate opener switch Ⓐ (with key fob in liftgate range). The liftgate will individually unlock and open. Once the liftgate is closed, the vehicle will remain in the unlock status.
- The key fob button must be held for 0.5 seconds before the liftgate opens.
- The liftgate must be unlocked to open it with the liftgate opener switch Ⓐ and without key fob in liftgate range.

- The switch on the liftgate Ⓐ can only be used to open the liftgate if the MAIN switch (located in the Instrument panel) is in the ON position.

A warning chime will sound if the shift lever is moved out of P (Park) during a power open operation.

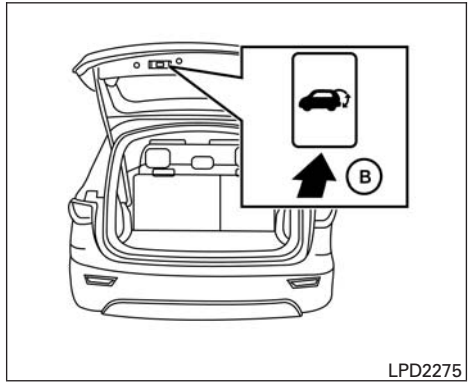

LPD2275

Power Close:
The power liftgate automatically moves from the fully open position to the secondary position. When the liftgate reaches the secondary position, the cinching motor engages and pulls the liftgate to its primary latch position. Power close takes approximately 7 – 10 seconds. The power close feature can be activated by the switch on the key fob, the instrument panel and the liftgate switch Ⓑ. The hazard lights flash and a chime sounds to indicate the power close sequence has been started.

- If the liftgate opener switch Ⓐ is activated while the cinching motor is engaged, the cinching motor will disengage and release the latch.
- The key fob button must be held for 0.5 seconds before the liftgate closes.
- The switch on the liftgate Ⓑ can only be used to close the liftgate if the power liftgate main switch is in the ON position.

Reverse:
The power liftgate will reverse direction immediately during power open or power close if the key fob, instrument panel or liftgate switch Ⓑ is pushed. A chime will sound to announce the reversal.

Auto Reverse:
If an obstacle is detected during power open or power close, a warning chime will sound and the liftgate will reverse direction and return to the full open or full close position. If a second obstacle is detected, the liftgate motion will stop and the liftgate will enter manual mode.

A pinch strip is mounted on each side of the liftgate. If an obstacle is detected by a pinch strip during power close, the liftgate will reverse direction and return to the full open position.

NOTE:

If the pinch strip is damaged or removed, the power close function will not operate.

⚠WARNING

There are some small distances immediately before the closed position which cannot be detected. Make sure that all passengers have their hands, etc., inside the vehicle before closing the liftgate.

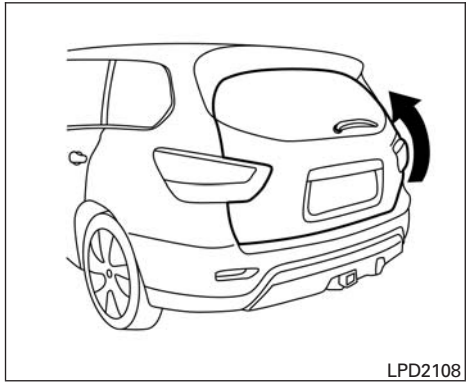

Manual Mode:
If power operation is not available, the liftgate may be operated manually. Power operation may not be available if the power liftgate main switch is in the ON position, if multiple obstacles have been detected in a single power cycle, or if battery voltage is low.

If the power liftgate opener switch Ⓐ is pushed during power open or close, the power operation will be canceled and the liftgate can be operated manually.

To open the liftgate manually, press the liftgate opener switch Ⓐ and lift the liftgate.

To close, lower and push the liftgate down securely.

SPA2547

POWER LIFTGATE MAIN SWITCH

The power liftgate operation can be turned on or off by the power liftgate main switch on the instrument panel.

When the power liftgate main switch is pushed to the OFF position, the power operation is not available by the power liftgate switch on the liftgate and liftgate opener switch Ⓐ or Ⓑ.

Power operation is available when in the OFF position by the instrument panel switch and the keyfob button.

LIFTGATE RELEASE

⚠ WARNING

- **Always be sure the liftgate has been closed securely to prevent it from opening while driving.**
- **Do not drive with the liftgate open. This could allow dangerous exhaust gases to be drawn into the vehicle. For additional information, refer to "Exhaust gas (carbon monoxide)" in the "Starting and driving" section of this manual.**

⚠ CAUTION

- **If the power liftgate does not stay open or if the liftgate unexpectedly closes at any time while a continuous warning chime sounds, do not operate the liftgate. There may be a pressure loss in one or both of the liftgate gas stays. Have the liftgate inspected by a NISSAN dealer.**
- **Do not activate the power liftgate if one or both of the liftgate gas stays are removed. Damage to the liftgate or power liftgate mechanisms may occur.**

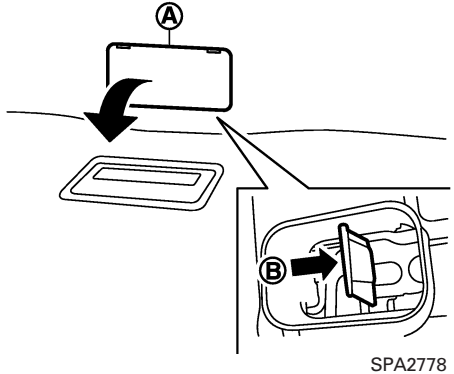

SPA2778

Manual liftgate release

Manual liftgate release (if so equipped)

If the liftgate cannot be locked or unlocked with the door lock switch or the key fob due to a discharged battery, follow these steps:

1. Remove the cover Ⓐ on the inside of the liftgate.
2. Move the lever Ⓑ as illustrated to open the liftgate.

Contact a NISSAN dealer as soon as possible for repair.

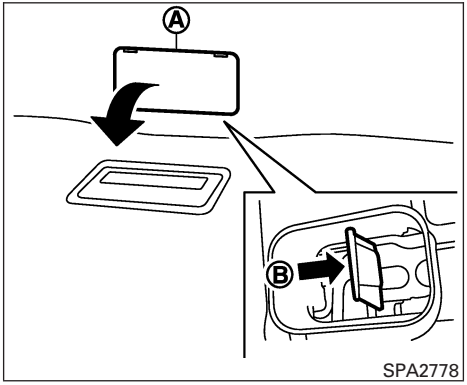

SPA2778

Power liftgate release (if so equipped)

If the liftgate cannot be opened with the instrument panel switch, liftgate opener switch or key fob due to a discharged battery, follow these steps:

1. Remove the cover Ⓐ on the inside of the liftgate.
2. Move the lever Ⓑ as illustrated to open the liftgate.

Contact a NISSAN dealer as soon as possible for repair.

LIFTGATE POSITION SETTING

The liftgate can be set to open to a specific height (Garage mode) by performing the following:

1. Open the liftgate using the request switch or the Intelligent Key.
2. Pull the liftgate down and move to the desired height position (the liftgate will have some resistance when being manually adjusted).
3. Press and hold the power liftgate switch Ⓑ located on the liftgate for more than 3 seconds or until 2 beeps are heard.

The liftgate will open to the selected position setting. To change the position of the liftgate, repeat Steps 1-3 for setting the position of the liftgate.

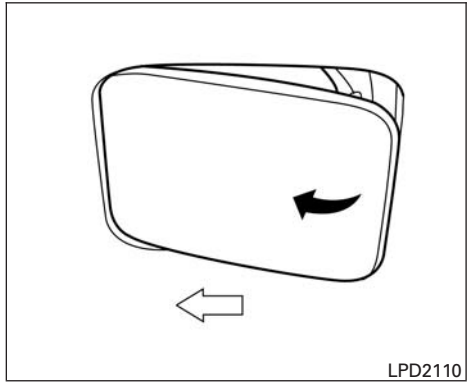
LPD2110

OPENING THE FUEL-FILLER DOOR

The fuel-filler door automatically unlocks when the driver's door is unlocked.

1. Unlock the fuel-filler door using one of the following operations:
   - Unlock the driver's door with the key fob.
   - Unlock the driver's door with the key.
   - Push the power door lock switch to the unlock position.
   - Push the door handle request switch.
2. To open the fuel-filler door, push the right side of the fuel-filler door to release.

To lock, close the fuel-filler door securely and lock the doors.

FUEL-FILLER CAP

⚠ WARNING

- **Gasoline is extremely flammable and highly explosive under certain conditions. You could be burned or seriously injured if it is misused or mishandled. Always stop the engine and do not smoke or allow open flames or sparks near the vehicle when refueling.**
- **Do not attempt to top off the fuel tank after the fuel pump nozzle shuts off automatically. Continued refueling may cause fuel overflow, resulting in fuel spray and possibly a fire.**
- **Use only an original equipment type fuel-filler cap as a replacement. It has a built-in safety valve needed for proper operation of the fuel system and emission control system. An incorrect cap can result in a serious malfunction and possible injury. It could also cause the Malfunction Indicator Light (MIL) to come on.**
- **Never pour fuel into the throttle body to attempt to start your vehicle.**
- **Do not fill a portable fuel container in the vehicle or trailer. Static electricity can cause an explosion of flammable liquid, vapor or gas in any vehicle or trailer. To reduce the risk of serious injury or death when filling portable fuel containers:**
  - **Always place the container on the ground when filling.**
  - **Do not use electronic devices when filling.**
  - **Keep the pump nozzle in contact with the container while you are filling it.**
  - **Use only approved portable fuel containers for flammable liquid.**

⚠ CAUTION

- **Do not use E-15 or E-85 fuel in your vehicle. For additional information, refer to "Recommended Fuel" in the "Technical and consumer information" section of this manual.**
- **The LOOSE FUEL CAP warning will appear if the fuel-filler cap is not properly tightened. It may take a few driving trips for the message to be displayed. Failure to tighten the fuel-filler cap properly after the LOOSE FUEL CAP warning appears may cause the Malfunction Indicator Light (MIL) to illuminate.**
- **Failure to tighten the fuel-filler cap properly may cause the Malfunction Indicator Light (MIL) to illuminate. If the light illuminates because the fuel-filler cap is loose or missing, tighten or install the cap and continue to drive the vehicle. The light should turn off after a few driving trips. If the light does not turn off after a few driving trips, have the vehicle inspected by a NISSAN dealer.**
- **For additional information, refer to "Malfunction Indicator Light (MIL)" in the "Instruments and Controls" section in this manual.**
- **If fuel is spilled on the vehicle body, flush it away with water to avoid paint damage.**

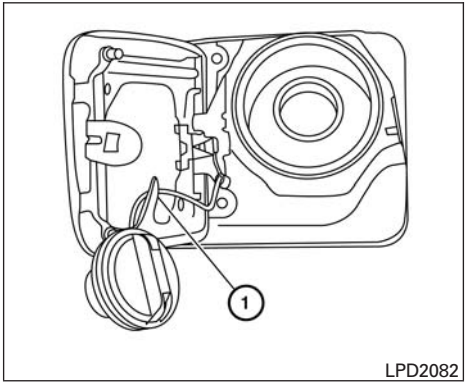

LPD2082

To remove the fuel-filler cap:

1. Turn the fuel-filler cap counterclockwise to remove.
2. Put the fuel-filler cap on the cap holder ① while refueling.

To install the fuel-filler cap:

1. Insert the fuel-filler cap straight into the fuel-filler tube.
2. Turn the fuel-filler cap clockwise until a single click is heard.

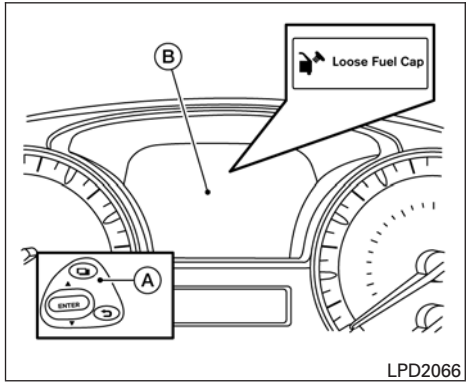

LPD2066

Loose Fuel Cap warning

The LOOSE FUEL CAP warning appears in the vehicle information display when the fuel-filler cap is not tightened correctly after the vehicle has been refueled. It may take a few driving trips for the message to be displayed. To turn off the warning, perform the following:

1. Remove and install the fuel-filler cap as soon as possible. For additional information, refer to “Fuel-filler cap” in this section.
2. Tighten the fuel-filler cap until it clicks.
3. Press the ❑ next button Ⓐ on the steering wheel for about 1 second to turn off the LOOSE FUEL CAP warning Ⓑ after tightening the fuel-filler cap.

⚠ WARNING

- **Do not adjust the steering wheel while driving. You could lose control of your vehicle and cause an accident.**
- **Do not adjust the steering wheel any closer to you than is necessary for proper steering operation and comfort. The driver's air bag inflates with great force. If you are unrestrained, leaning forward, sitting sideways or out of position in any way, you are at greater risk of injury or death in a crash. You may also receive serious or fatal injuries from the air bag if you are up against it when it inflates. Always sit back against the seatback and as far away as practical from the steering wheel. Always use the seat belts.**

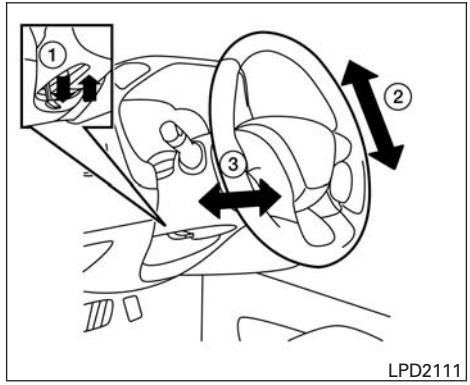

LPD2111

MANUAL OPERATION (if so equipped)

Tilt and telescopic operation

Pull the lock lever ① down:

- Adjust the steering wheel up or down in direction ② to the desired position.
- Adjust the steering wheel forward or backward in direction ③ to the desired position.

Push the lock lever ① up firmly to lock the steering wheel in place.

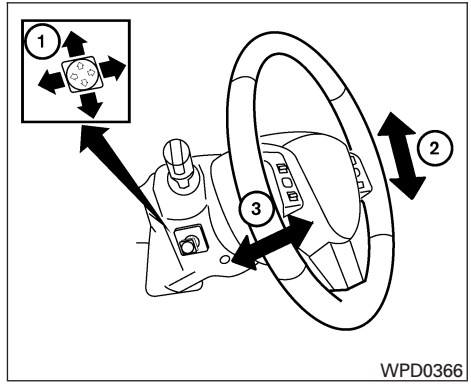

WPD0366

AUTOMATIC OPERATION (if so equipped)

Tilt and telescopic operation

To adjust the steering wheel move the switch ① in the following directions:

- Adjust the steering wheel up or down in direction ② to the desired tilt position.
- Adjust the steering wheel forward or backward in direction ③ to the desired telescopic position.

⚠CAUTION

For vehicles with automatic drive positioner: Failure to reset the tilt and telescoping functions of the steering wheel, after the vehicle's battery has been discharged, may prevent the steering wheel position from being adjusted.

For vehicles with automatic drive positioner: Both the tilt and telescopic steering operation must be reset after the vehicle's battery has been discharged in order to prevent the tilt and telescopic operation from locking in one position. When the battery has been recharged or replaced, perform the following:

- For tilt operation: Adjust the switch ① so the steering wheel moves to the highest position ② that can be reached.
- For telescopic operation: Adjust the switch ① so the steering wheel moves to the most forward and backward position ③ that can be reached.

Performing these operations resets the range of the steering wheel's tilt and telescopic function.

Entry/Exit function

The automatic drive positioner system will make the steering wheel move up automatically when the driver's door is opened and the ignition switch is in the LOCK position. This lets the driver get into and out of the seat more easily. The steering wheel moves back into position when the driver's door is closed and the ignition switch is pushed.

For additional information, refer to "Automatic drive positioner" in this section.

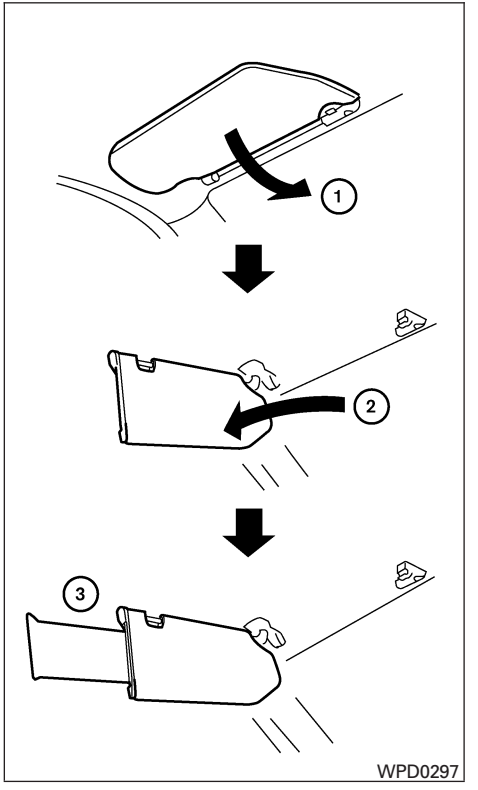

① To block glare from the front, swing down the sun visor.

② To block glare from the side, remove the sun visor from the center mount and swing the visor to the side.

③ Slide the extension sun visor in or out as needed.

⚠ CAUTION

- **Do not store the sun visor before returning the extension to its original position.**
- **Do not pull the extension sun visor forcibly downward.**

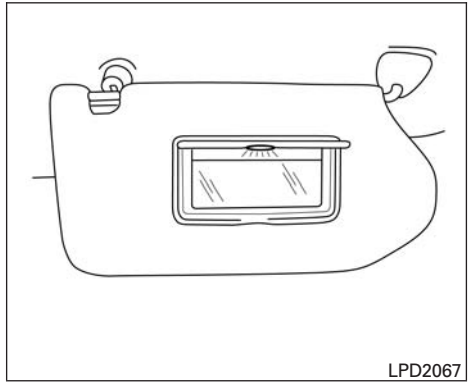

VANITY MIRRORS

To access the vanity mirror, pull the sun visor down and flip open the mirror cover. The vanity mirror will illuminate when the mirror cover is open.

AUTOMATIC ANTI-GLARE REARVIEW MIRROR

The inside mirror is designed so that it automatically dims according to the intensity of the headlights of the vehicle following you. The automatic anti-glare feature operates only when the ignition switch is in the ON position.

The indicator light ① will illuminate when the automatic anti-glare feature is operating.

To turn off the automatic anti-glare feature, press the ⏻ button. The indicator light will turn off.

To turn on the automatic anti-glare feature, press the ⏻ button again. The indicator light will turn on.

NOTE:

Do not hang any objects over the sensors ② or apply glass cleaner to the sensors. Doing so will reduce the sensitivity of the sensors, resulting in improper operation.

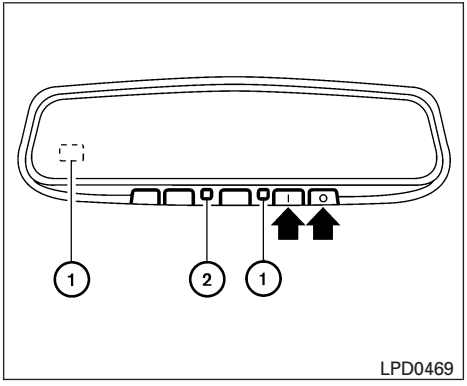

Type A - Without compass (if so equipped)

Type A and Type B (if so equipped)

The indicator light ② will illuminate when the automatic anti-glare feature is operating.

To turn off the automatic anti-glare feature, press:

- the O button for inside mirrors without compass.
- the ⏻ button for inside mirrors with compass.

The indicator light will turn off.

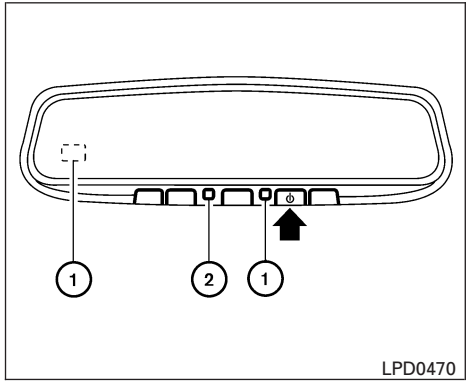

Type B - With compass (if so equipped)

To turn on the automatic anti-glare feature again, press:

- the | button for inside mirrors without compass.
- the ⏻ button for inside mirrors with compass.

The indicator light will turn on.

For additional information on HomeLink® Universal Transceiver operation, refer to “HomeLink® Universal Transceiver” in the “Instruments and controls” section of this manual.

For additional information on the compass display (if so equipped), refer to “Compass display” in the “Instruments and controls” section of this manual.

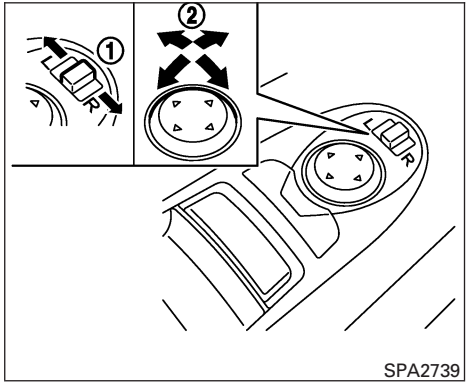

SPA2739

OUTSIDE MIRRORS

The outside mirror remote control will operate only when the ignition switch is in the ACC or ON position.

Move the small switch ① to select the left or right mirror. Adjust each mirror to the desired position using the large switch ②.

⚠ WARNING

- **Objects viewed in the outside mirror on the passenger side are closer than they appear. Be careful when moving to the right. Using only this mirror could cause an accident. Use the inside mirror or glance over your shoulder to properly judge distances to other objects.**
- **Do not adjust the mirrors while driving. You could lose control of your vehicle and cause an accident.**

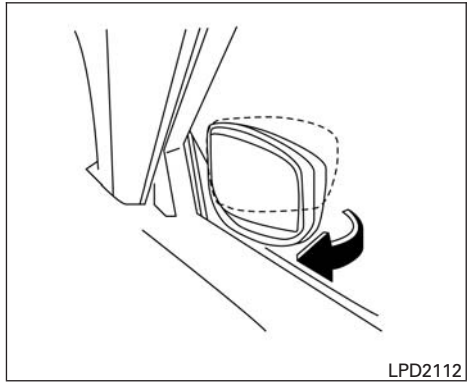
LPD2112

Manual folding outside mirrors

Pull the outside mirror toward the door to fold it.

Reverse tilt-down feature (if so equipped)

The reverse tilt-down feature will turn the outside mirror surface downward to provide better rear visibility close to the vehicle.

When the ignition switch is in the ON position, turn the outside mirror control switch to the left or right position. Only one mirror can be selected at a time.

Move the shift lever to R (Reverse). The selected mirror will turn downward.

The selected mirror surface will return to its original position when any of the following have occurred:

- The shift lever is moved to any position other than R (Reverse).
- The outside mirror control switch is set to the neutral or center position.
- The ignition switch is placed in the OFF position.

NOTE:

If the outside mirror control switch is in the neutral position, neither mirror will turn downward when the shift lever is moved to R (Reverse).

For additional information regarding this feature, refer to “Automatic drive positioner” in this section.

Heated mirrors

The outside mirrors can be heated to defrost, defog, or de-ice for improved visibility. For additional information, refer to “Rear window and outside mirror defroster switch” in the “Instruments and controls” section of this manual.

AUTOMATIC DRIVE POSITIONER (if so equipped)

The automatic drive positioner system has three features:

- Memory storage function
- Entry/exit function
- Seat synchronization function

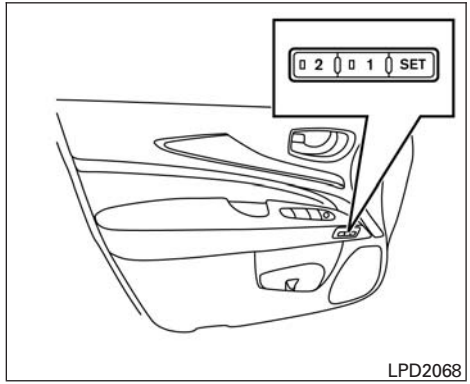

LPD2068

MEMORY STORAGE FUNCTION

Two positions for the driver’s seat, steering column, and outside mirrors can be stored in the automatic drive positioner memory. Follow these procedures to use the memory system.

1. Set the Continuously Variable Transmission (CVT) shift lever to the P (Park) position.
2. Place the ignition in the ON position.
3. Adjust the driver’s seat, steering column, and outside mirrors to the desired positions by manually operating each adjusting switch. For additional information, refer to “Seats” in the “Safety—Seats, seat belts and

supplemental restraint system" section of this manual, and "Tilt/Telescopic Steering" and "Outside mirrors" in this section.

During this step, do not place the ignition switch in any position other than ON.

4. Push the SET switch and, within 5 seconds, push the memory switch (1 or 2).

   The indicator light for the pushed memory switch will come on and stay on for approximately 5 seconds after pushing the switch. After the indicator light goes off, the selected positions are stored in the selected memory (1 or 2). A chime will sound if the memory has been stored correctly (if so equipped).

If a new memory is stored in the same memory switch, the previous memory will be deleted.

Linking a key fob to a stored memory position

Each key fob can be linked to a stored memory position (memory switch 1 or 2) with the following procedure.

1. Follow the steps for storing a memory position.
2. While the indicator light for the memory switch being set is illuminated for 5 seconds, press the button on the key fob. The indicator light will blink. After the indicator light goes off, the key fob is linked to that memory setting.

With the ignition switch placed in the OFF position, press the button on the key fob. The driver's seat, steering wheel and outside mirrors will move to the memorized position.

NOTE:

If a new memory position is saved to the memory switch, the key fob automatically re-links.

Reverse tilt-down feature (if so equipped)

The reverse tilt-down feature will turn the selected outside mirror surface downward to provide better rear visibility close to the vehicle.

When the ignition switch is in the ON position, turn the outside mirror control switch to the left or right position. Only one mirror can be selected at a time.

Move the shift lever to R (Reverse). The selected mirror will turn downward.

The selected mirror surface will return to its original position when any of the following have occurred:

- The shift lever is moved to any position other than R (Reverse).
- The outside mirror control switch is set to the neutral or center position.
- The ignition switch is placed in the OFF position.

NOTE:

If the outside mirror control switch is in the neutral position, neither mirror will turn downward when the shift lever is moved to R (Reverse).

Seat synchronization function

The seat synchronization function automatically adjusts the positions of the steering wheel and outside mirrors when the seat is adjusted using the power seat switches.

However, the steering wheel and outside mirrors will not move if the seat is adjusted over the maximum thresholds. The system considers that the steering wheel and outside mirror adjustments are not necessary because the seat may not be adjusted for the driving position. Note that the function is set to disabled as the factory default setting.

The seat synchronization function operates under the following conditions:

- The ignition switch is in the ON position.
- The shift lever is in the P (Park) position.

If the outside mirrors or the steering wheel reaches its maximum adjustment, the function is automatically disabled. Restart the function by selecting a previously stored seat memory position using the memory switches (1 or 2). An Intelligent Key that was previously linked to the stored seat memory can also be used to restart the function.

If a seat position was not previously stored in the seat memory, restart the function by adjusting the steering wheel and outside mirrors manually for your best driving position and then drive the vehicle above 4 MPH (7 km/h).

Cancel or activate seat synchronization function

The shift lever must be in the P (Park) position with the ignition switch placed in the ACC position.

Confirming memory storage

- Place the ignition switch in the ON position and push the SET switch. If the main memory has not been stored, the indicator light will come on for approximately 0.5 seconds. When the memory has stored the position, the indicator light will stay on for approximately 5 seconds.
- If the battery cable is disconnected, or if the fuse opens, the memory storage function will be canceled and must be restarted before a stored memory position can be set again. Drive the vehicle over 25 MPH (40 km/h) to restart the memory storage function. You can also restart the memory storage function using the following procedure.

1. Connect the battery cable or replace the fuse.
2. Open and close the driver's door more than two times with the ignition switch in the LOCK position.

   Once the memory storage function has been restarted, you can store a memory position. For additional information, refer to "Memory storage function" in this section.

Selecting the memorized position

Set the shift lever to the P (Park) position, then:

- Within 45 seconds of opening the driver's door, push the memory switch (1 or 2) or
- Place the ignition switch in the ON position and push the memory switch (1 or 2).

The driver's seat, steering column, and outside mirrors will move to the memorized position with the indicator light blinking, and then the light will stay on for approximately 5 seconds.

ENTRY/EXIT FUNCTION

This system is designed so that the driver's seat and automatic operation steering column will automatically move when the shift lever is in the P (Park) position. This allows the driver to get into and out of the driver's seat more easily.

The driver's seat will slide backward and the steering column will move up:

- When the driver's door is opened with the ignition switch placed in the LOCK position.
- When the ignition switch is turned from ACC to LOCK with the driver's door open.

The driver's seat and steering wheel will return to the previous position:

- When the driver's door is closed with the ignition switch placed in the LOCK position.
- When the ignition switch is turned from ACC to ON while the shift lever is in the P (Park) position.

The entry/exit function can be adjusted or canceled through the Vehicle Settings in the vehicle information display by performing the following:

- Switch the Exit Seat Slide from ON to OFF.
- Switch the Exit Steering UP from ON to OFF.

Restarting the entry/exit function

If the battery cable is disconnected or if the fuse opens, the entry/exit function will be disabled. Drive the vehicle over 25 MPH (40 km/h) to restart the entry/exit function. You can also restart the entry/exit function using the following procedure.

1. Connect the battery cable or replace the fuse.
2. Open and close the driver's door more than two times with the ignition switch in the LOCK position.

The entry/exit function should now work properly.

SETTING MEMORY FUNCTION

The position of the following settings can be linked to the Intelligent Key and the memorized settings can be available for each Intelligent Key.

- Climate control system
- Navigation system (if so equipped)
- Audio system

To use the memory function, set the climate, navigation and audio systems to the driver's preferred settings. Lock the doors with the Intelligent Key. Each Intelligent Key may be set with the driver's individual preferences. When a new Intelligent Key is used, "Connection with the key has been done" will be displayed on the screen and the memorized settings are available.

To engage the memorized settings, perform the following:

1. Carry the Intelligent Key that is linked to the memorized settings.
2. Unlock the doors by pushing the driver's door handle request switch or the UNLOCK button on the Intelligent Key.
3. Place the ignition switch in the "ON" position. The settings linked to the Intelligent Key will start.

For additional information on using the Climate control system refer to "Heater and air conditioner (automatic)" in the "Monitor, climate, audio, phone and voice recognition systems" section of this manual.

For additional information on using the Navigation System, refer to the separate Navigation System Owner's Manual.

For additional information on using the Audio system, refer to "Audio system" in the "Monitor, climate, audio, phone and voice recognition systems" section of this manual.

SYSTEM OPERATION

The automatic drive positioner system will not work or will stop operating under the following conditions:

- When the vehicle speed is above 4 MPH (7 km/h).
- When any of the memory switches are pushed while the automatic drive positioner is operating.
- When the adjusting switch for the driver's seat and steering column is turned on while the automatic drive positioner is operating.
- When the seat has already been moved to the memorized position.

- When no seat position is stored in the memory switch.
- When the shift lever is moved from P (Park) to any other position.
- When the driver's door remains open more than 45 seconds and the ignition switch is not in the ON position.
- The seat synchronization function is automatically disabled if the outside mirrors or steering wheel reaches its maximum adjustment.
- The seat synchronization function will not operate if the seat is adjusted over one of the following maximum thresholds:
  - Seat sliding: 3.0 in (76 mm)
  - Seatback reclining: 9.1 degrees
  - Seat lifter (rear side): 0.8 in (20 mm)

The entry/exit function can be adjusted or canceled through the Vehicle Settings in the vehicle information display by performing the following:

- Switch the Exit Seat Slide from ON to OFF.
- Switch the Exit Steering UP from ON to OFF.

4 Monitor, climate, audio, phone and voice recognition systems

Control panel buttons — color screen without Navigation System (if so equipped) 4-4
How to use the NISSAN controller 4-5
How to select menus on the screen 4-6
How to use the STATUS button 4-6
How to use the INFO button 4-6
How to use the SETTING button 4-8
☼/☽ OFF button 4-9
Control panel buttons — color screen with Navigation System (if so equipped) 4-10
How to use the NISSAN controller 4-11
How to use the touch-screen 4-11
How to select menus on the screen 4-13
How to use the STATUS button 4-13
How to use the INFO button 4-14
How to use the SETTING button 4-16
☼/☽ OFF button 4-18
Image viewer (if so equipped) 4-19
Using the image viewer 4-19
RearView Monitor (if so equipped) 4-21
How to read the displayed lines 4-22
How to park with predicted course lines 4-22
Difference between predicted and actual distances 4-23
Predicted course line settings 4-26
How to adjust the screen 4-26
Parking Sensor / Rear Center Sonar 4-26
Operating tips 4-28
Around View® Monitor (if so equipped) 4-28
Available views 4-30
Difference between predictive and actual distances 4-35
How to switch the display 4-37
Parking Sensor / Rear Center Sonar 4-38
How to adjust the screen view 4-40
View malfunction 4-40
Operating tips 4-40
Vents 4-41
Heater and air conditioner (automatic) 4-42
Automatic operation 4-43
Manual operation 4-44
Operating tips 4-46
Servicing air conditioner 4-47
Audio system 4-47

Radio 4-47
FM radio reception 4-47
AM radio reception 4-48
Satellite radio reception (if so equipped) 4-48
Audio operation precautions 4-48
FM/AM/SAT radio with compact disc (CD) player (if so equipped) 4-63
FM/AM/SAT radio with CD/DVD player (if so equipped) 4-70
Digital Versatile Disc (DVD) Player Operation (models with Navigation System) 4-76
USB (Universal Serial Bus) Connection Port (models without Navigation System) (if so equipped) 4-79
USB (Universal Serial Bus) Connection Port (models with Navigation System) (if so equipped) 4-80
iPod®* player operation without Navigation System (if so equipped) 4-84
iPod®* player operation with Navigation System (if so equipped) 4-86
Bluetooth® streaming audio (if so equipped) 4-90
CD care and cleaning 4-93
Steering wheel switch for audio control 4-94
Antenna 4-95
Dual head restraint/headrest DVD system (if so equipped) 4-96
System components 4-97
Before operating dual head restraint/ headrest DVD system 4-102
Playing a DVD (Digital Versatile Disc) 4-103
Operating tips. 4-107
Care and maintenance 4-108
Car phone or CB radio 4-108
Bluetooth® Hands-Free Phone System without Navigation System (if so equipped) 4-109
Regulatory Information 4-111
Using the system 4-111
Control buttons 4-114
Getting started 4-114
List of voice commands 4-116
Voice Adaptation (VA) mode 4-120
Manual control 4-121
Troubleshooting guide 4-123
Bluetooth® Hands-Free Phone System with Navigation System (if so equipped) 4-124
Regulatory Information 4-126
Voice commands 4-126

Connecting procedure 4-127
Vehicle Phonebook 4-128
Handset phonebook 4-130
Making a call. 4-131
Receiving a call 4-132
During a call 4-133
Ending a call 4-133
Phone settings 4-134
Bluetooth® settings 4-135
Call volume 4-136
NISSAN Voice Recognition System
(if so equipped) 4-137
NISSAN Voice Recognition Standard Mode 4-137
Using the system 4-140
Before starting 4-140
Giving voice commands 4-140
NISSAN Voice Recognition Alternate
Command Mode 4-145
Using the system 4-150
Speaker Adaptation function 4-152
Troubleshooting guide 4-153

CONTROL PANEL BUTTONS — COLOR SCREEN WITHOUT NAVIGATION SYSTEM (if so equipped)

⚠ WARNING

- **Positioning of the heating or air conditioning controls and display controls should not be done while driving in order that full attention may be given to the driving operation.**
- **Do not disassemble or modify this system. If you do, it may result in accidents, fire, or electrical shock.**
- **Do not use this system if you notice any abnormality, such as a frozen screen or lack of sound. Continued use of the system may result in accident, fire or electric shock.**
- **In case you notice any foreign object in the system hardware, spill liquid on it, or notice smoke or smell coming from it, stop using the system immediately and contact your nearest NISSAN dealer. Ignoring such conditions may lead to accidents, fire or electrical shock.**

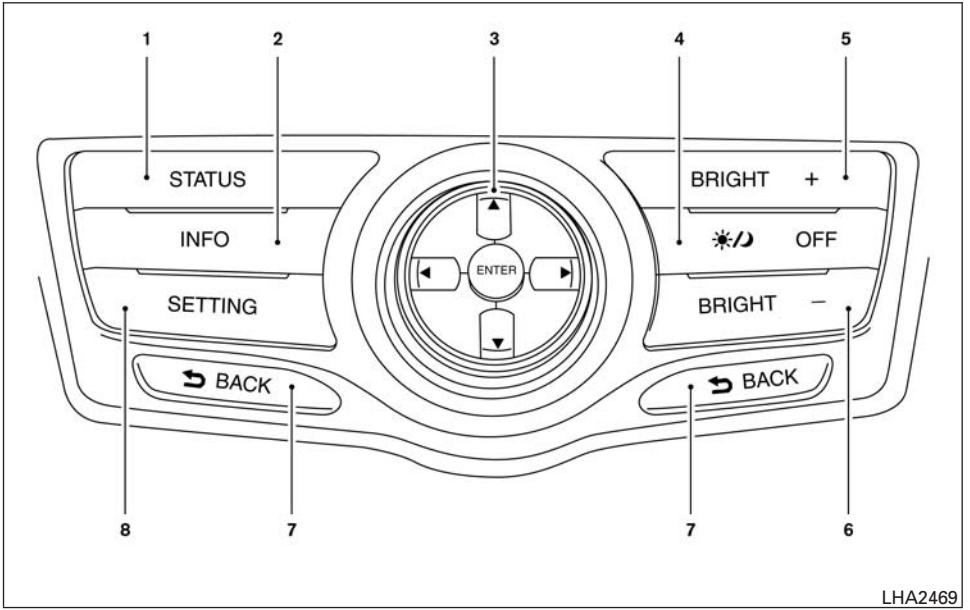

1. STATUS button
2. INFO button
3. NISSAN controller
4. ☼/☽ OFF brightness control button
5. BRIGHT + (brightness control) button
6. BRIGHT – (brightness control) button
7. ⮌ BACK (previous) button
8. SETTING button

⚠ CAUTION

- **The glass display screen may break if it is hit with a hard or sharp object. If the glass screen breaks, do not touch it. Doing so could result in an injury.**
- **To clean the display, never use a rough cloth, alcohol, benzine, thinner or any kind of solvent or paper towel with a chemical cleaning agent. They will scratch or deteriorate the panel.**
- **Do not splash any liquid such as water or car fragrance on the display. Contact with liquid will cause the system to malfunction.**

When you use this system, make sure the engine is running.

If you use the system with the engine not running (ignition ON or ACC) for a long time, it will discharge the battery, and the engine will not start.

Reference symbols:

ENTER button — This is a button on the control panel.

"Example" — Words marked in quotes refer to a key shown on the display. These keys can only be selected using the NISSAN controller.

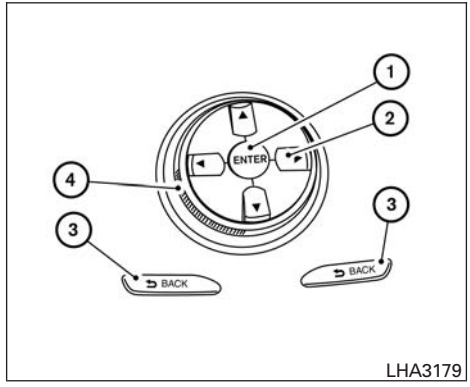

LHA3179

HOW TO USE THE NISSAN CONTROLLER

Use the NISSAN controller to choose an item on the display screen. Highlight an item on the display using the main directional buttons ② or the center dial ④. Then press the ENTER button ① to select the item or perform the action.

The ⮌ BACK button ③ has two functions:

- Go back to the previous display (cancel).

If you press the ⮌ BACK button ③ during setup, the setup will be canceled and/or the display will return to the previous screen.

- Finish setup.

In some screens pressing the ⮌ BACK button ③ accepts the changes made during setup.

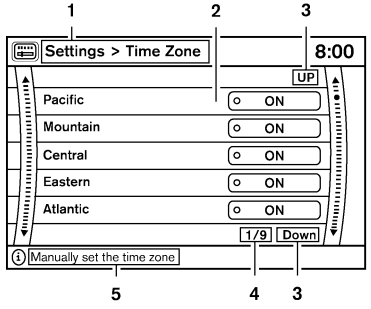

LHA1300

HOW TO SELECT MENUS ON THE SCREEN

Vehicle functions are viewed on the center display screen in menus. Whenever a menu selection is made or menu item is highlighted, different areas on the screen provide you with important information. See the following for details:

1. Header:
   Shows the path used to get to the current screen (for example, press the SETTING button > then select the “Clock” key, then select the “Time Zone” key).
2. Menu Selections:
   Shows the options to choose within that menu screen (for example, Pacific time zone, Mountain time zone, etc.).
3. UP/DOWN Movement Indicator:
   Shows that the NISSAN controller may be used to move UP/DOWN on the screen and select more options.
4. Screen Count:
   Shows the number of menu selections available for that screen (for example, 1/9).
5. Footer/Information Line:
   Provides more information (if available) about the menu selection currently highlighted (for example, manually set the time zone).

HOW TO USE THE STATUS BUTTON

To display the status of the audio, climate control system and fuel consumption, press the STATUS button.

The following information will appear when the STATUS button is pressed multiple times:

Audio → Audio and climate control system → Audio and fuel consumption → Audio

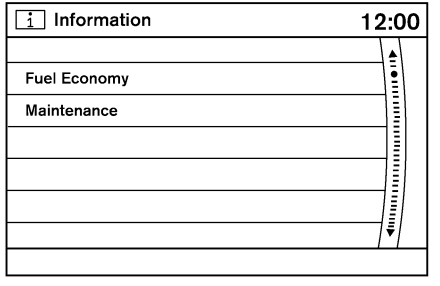

WHA1149

HOW TO USE THE INFO BUTTON

Press the INFO button. This screen sets or displays various information that is helpful for using the vehicle. Available items include fuel economy and maintenance information.

Menu Item			Result
Fuel Economy			Displays Fuel Economy menu.
	Distance to Empty (DTE)		Displays an estimation of the distance that the vehicle can be driven before refueling. The DTE is constantly calculated based on the amount of fuel in the fuel tank and actual fuel consumption. The display is updated every 30 seconds. When the fuel level is low, the DTE display will change to (*). **NOTE:** If the amount of fuel added while the ignition switch is OFF is small, the display just before the ignition switch is turned off may continue to be displayed. **NOTE:** When driving uphill or rounding curves, the fuel in the tank shifts, which may momentarily change the display.
	Average Fuel Economy		Displays the average fuel economy since the last reset. The display is updated every 30 seconds and 1/3 mi (500 m). After a reset or connecting the battery cables, the display might show (**.*).
	Fuel Economy Record		Select the “View” key to display the average fuel consumption history in a graph form.
Maintenance			Displays maintenance reminders.
	Reminder keys (1–4)		Select a key to display that maintenance interval.
		Reset Distance	Resets the distance for the selected reminder to 0 km (mi).
		Interval	Displays the interval for the selected reminder. Select the “+” or “-” keys to adjust the distance up or down.
		Interval Reminder	Displays status of the selected interval reminder. Select to toggle on or off. If set to “On”, the maintenance notice screen will be displayed once the interval is met and the ignition switch is placed in the OFF and then ON position.

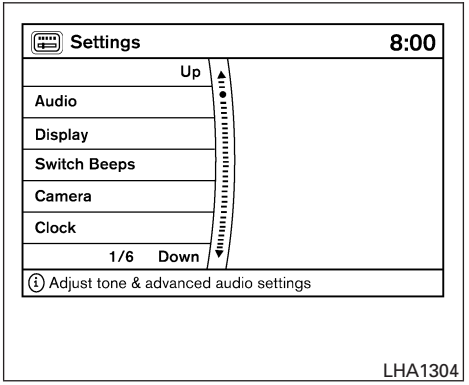

HOW TO USE THE SETTING BUTTON

Press the SETTING button. This screen displays and adjusts various settings and functions that are available for your vehicle. Use the NISSAN controller to select an item and then press the ENTER button. When the amber indicator next to an item is illuminated, the feature is enabled.

Menu Item		Result
Audio		For additional information, refer to “Audio system” in this section.
Display		Adjusts the settings for the display screen.
	Brightness/Contrast	Adjusts the brightness or contrast of the map background.
	Display off	Toggles the display screen on and off. The amber indicator is illuminated when the display is set to “On”. When the display is set to “Off” and a control panel, audio or heater and air conditioner button is pressed, the display will resume until that operation is finished. To turn the display back on, press and hold the ☼/☽ OFF button for approximately 2 seconds or return to the display setting screen and adjust the setting.
	Background Color	Adjusts the display screen between day and night mode.
Switch Beeps		Toggles on and off the beep sound that is heard when a control panel button is pressed.
Camera		Toggles the predictive course lines on or off when the rear view camera is displayed on screen. For additional information, refer to “RearView Monitor” in this section.
Clock		Adjusts the clock settings.

Menu Item		Result
	On-screen Clock	Toggles on or off the clock in the upper right corner of the display.
	Clock Format	Toggles between a 12-hour and 24-hour clock.
	Daylight Savings Time	Toggles on or off the daylight savings time.
	Time Zone	Adjusts the time zone. Choose a time zone from the available list.
	Adjust Clock	Manually adjusts the hours and minutes of the clock.
Language & Units		Adjusts the language shown in the display. Available settings are “English”, “Français”, “or “Español”. Adjusts the unit settings shown on the display. Available settings are “US” (mi,°F,MPG) and “Metric (km, °C, L/100 km))”.

☼/☽ OFF BUTTON

To change the display brightness, press the ☼/☽ OFF button. Pressing the button again will change the display to the day AUTO or the night ☽ display. The brightness can then be adjusted using the NISSAN controller.

The display brightness can also be adjusted using the + (brighter) button or the – (dimmer) button.

If no operation is done within 10 seconds, the display will return to the previous display.

Press and hold the ☼/☽ OFF button for more than 2 seconds to turn the display off. Press the button again to turn the display on.

CONTROL PANEL BUTTONS — COLOR SCREEN WITH NAVIGATION SYSTEM (if so equipped)

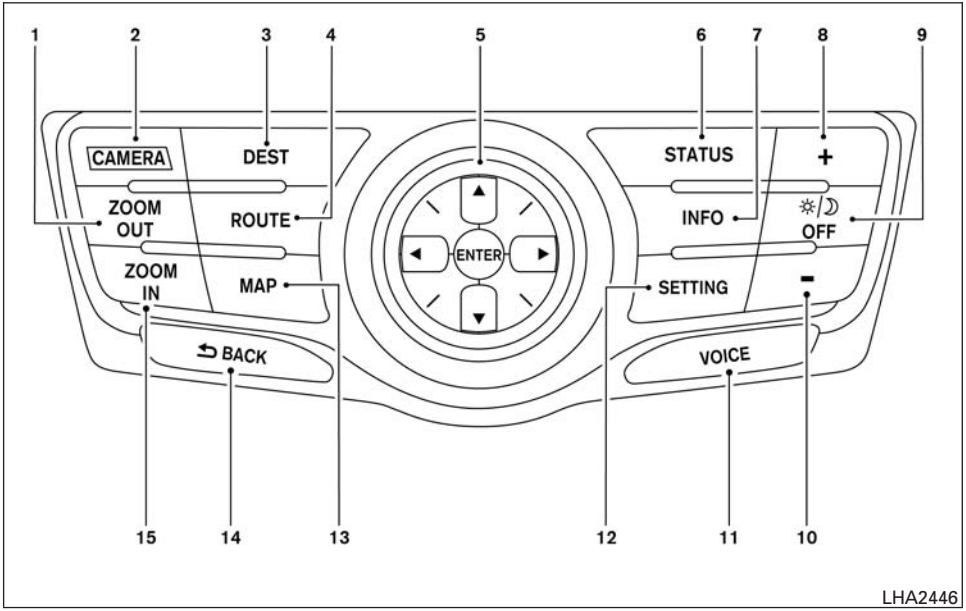

1. ZOOM OUT button*
2. CAMERA button
3. DEST (destination) button*
4. ROUTE button*
5. NISSAN controller (P. 4-11)
6. STATUS button (P. 4-13)
7. INFO button (P. 4-14)
8. + (brightness control) button
9. ☼/☽ OFF brightness control button
10. - (brightness control) button
11. VOICE button*
12. SETTING button (P. 4-16)
13. MAP button*
14. ⮌ BACK (previous) button
15. ZOOM IN button*

*For Navigation system control buttons, refer to the separate Navigation System Owner's Manual.

When you use this system, make sure the engine is running.

If you use the system with the engine not running (ignition ON or ACC) for a long time, it will discharge the battery, and the engine will not start.

Reference symbols:

ENTER button — This is a button on the control panel.

"Example" — Words marked in quotes refer to a key shown only on the display. These keys can be selected by touching the screen or using the NISSAN controller.

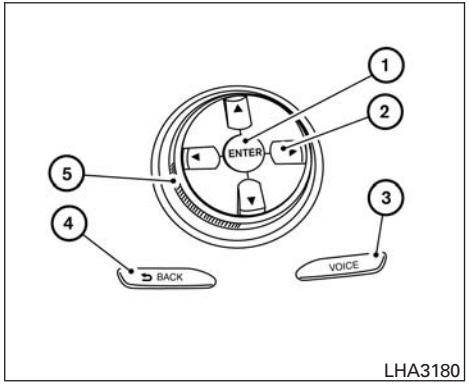

HOW TO USE THE NISSAN CONTROLLER

Use the NISSAN controller to choose an item on the display screen. Highlight an item on the display using the main directional buttons ② or the center dial ⑤. Then press the ENTER button ① to select the item or perform the action.

The ⮌ BACK button ④ has two functions:

- Go back to the previous display (cancel).

If you press the ⮌ BACK button ④ during setup, the setup will be canceled and/or the display will return to the previous screen.

- Finish setup.

In some screens, pressing the ⮌ BACK button ④ accepts the changes made during setup.

For the VOICE button ③ functions, refer to the separate Navigation System Owner's Manual.

HOW TO USE THE TOUCH-SCREEN

⚠ CAUTION

- **The glass display screen may break if it is hit with a hard or sharp object. If the glass screen breaks, do not touch it. Doing so could result in an injury.**
- **To clean the display, never use a rough cloth, alcohol, benzine, thinner or any kind of solvent or paper towel with a chemical cleaning agent. They will scratch or deteriorate the panel.**
- **Do not splash any liquid such as water or car fragrance on the display. Contact with liquid will cause the system to malfunction.**

To help ensure safe driving, some functions cannot be operated while driving.

The on-screen functions that are not available while driving will be "grayed out" or muted.

Park the vehicle in a safe location and then operate the navigation system.

⚠ WARNING

- **ALWAYS give your full attention to driving.**
- **Avoid using vehicle features that could distract you. If distracted, you could lose control of your vehicle and cause an accident.**

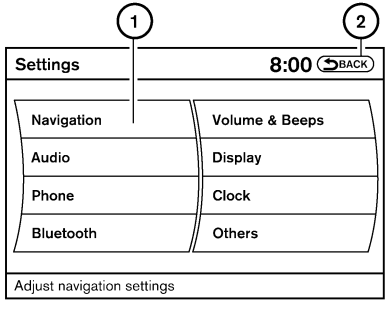

LHA1227

Touch-screen operation

With this system, the same operations as those for the NISSAN controller are possible using the touch-screen operation.

Menu Item		Result
Selecting the item		Touch an item to select . To select the “Navigation” key, touch the “Navigation” key① on the screen. Touch the “BACK” key② to return to the previous screen.
Adjusting the item		Touch the “+” key or the “−” key to adjust the settings of an item. Touch the up arrow to scroll up the page one item at a time, or touch the double up arrow to scroll up an entire page. Touch the down arrow to scroll down the page one item at a time, or touch the double down arrow to scroll down an entire page.
Inputting characters		Touch the letter or number key. There are some options available when inputting characters.
	Uppercase	Shows uppercase characters.
	Lowercase	Shows lowercase characters.
	Space	Inserts a space.
	Delete	Deletes the last inputted character with one touch. Touch and hold the “Delete” key to delete all of the characters.
	OK	Completes the character input.

Touch-screen maintenance

If you clean the display screen, use a dry, soft cloth. If additional cleaning is necessary, use a small amount of neutral detergent with a soft cloth. Never spray the screen with water or detergent. Dampen the cloth first, and then wipe the screen.

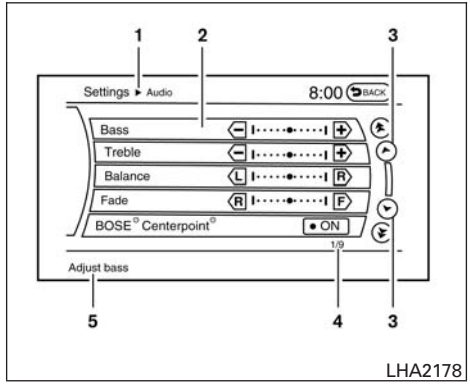

HOW TO SELECT MENUS ON THE SCREEN

Vehicle functions are viewed on the center display screen in menus. Whenever a menu selection is made or menu item is highlighted, different areas on the screen provide you with important information. See the following for details.

1. Header:
   Shows the path used to get to the current screen (for example, press the SETTING button > then select the “Audio” key).
2. Menu Selections:
   Shows the options to choose within that menu screen (for example, Bass, etc.).
3. Up/Down Movement Indicator:
   Shows that the NISSAN controller may be used to move up or down on the screen to select more options.
4. Screen Count:
   Shows the number of menu selections available for the current menu even if they are on multiple pages (for example, 1/9).
5. Footer/Information Line:
   Provides more information (if available) about the menu selection currently highlighted (for example, Adjust bass).

HOW TO USE THE STATUS BUTTON

The STATUS button is used to display system information. Three different split screens of information are available. Press the STATUS button multiple times to cycle through these screens as follows:

Audio with Turn Information for Navigation → Audio with Fuel Economy Information → Audio with Climate Control Information → Audio with Turn Information for Navigation

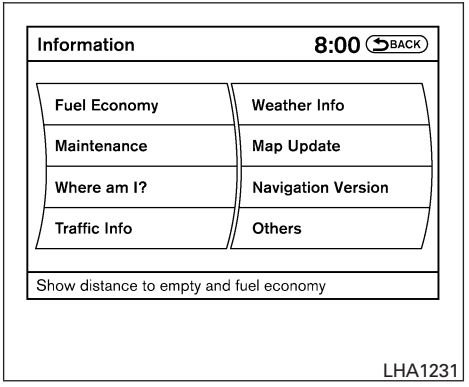

HOW TO USE THE INFO BUTTON

Press the INFO button. This screen sets or displays various information that is helpful for using the vehicle. Available items include fuel economy, maintenance, navigation and voice recognition information.

Menu Item		Result
Fuel Economy		Displays Fuel Economy menu.
	Distance to Empty (DTE)	Displays an estimation of the distance that the vehicle can be driven before refueling. The DTE is constantly calculated based on the amount of fuel in the fuel tank and actual fuel consumption. The display is updated every 30 seconds. When the fuel level is low, the DTE display will change to (*). **NOTE:** If the amount of fuel added while the ignition switch is OFF is small, the display just before the ignition switch is turned off may continue to be displayed. **NOTE:** When driving uphill or rounding curves, the fuel in the tank shifts, which may momentarily change the display.
	Average Fuel Economy	Displays the average fuel economy since the last reset. The display is updated every 30 seconds and 1/3 mi (500 m). After a reset or connecting the battery cables, the display might show (**.*). Select “Reset Fuel Eco” to reset the fuel economy calculation to 0.
	Fuel Economy History	Touch the “View” key to display the average fuel consumption history in a graph form.
Maintenance		Displays maintenance reminders.
	Reminder keys	Touch a key to display the maintenance interval for engine oil, oil filter, tire or other reminder.

Menu Item		Result
	Reset Distance	Resets the distance for the selected reminder to 0 mi (km).
	Interval	Displays the interval for the selected reminder. Select the “+” or “-” keys to adjust the distance up or down.
	Interval Reminder	Displays status of the selected interval reminder. Select to toggle on or off. If set to “On”, the maintenance notice screen will be displayed once the interval is met and the ignition switch is placed in the OFF and then ON position.
Where am I?		For additional information, refer to the separate Navigation System Owner’s Manual.
Traffic Info		For additional information, refer to the separate Navigation System Owner’s Manual.
Weather Info		For additional information, refer to the separate Navigation System Owner’s Manual.
Map Update		For additional information, refer to the separate Navigation System Owner’s Manual.
Navigation Version		For additional information, refer to the separate Navigation System Owner’s Manual.
Others		Displays a list of further options.
	Map Update	For additional information regarding Map Updates, refer to the separate Navigation System Owner’s Manual.
	Navigation Version	For additional information regarding Navigation Version, refer to the separate Navigation System Owner’s Manual.
	GPS Position	For additional information regarding GPS Position, refer to the separate Navigation System Owner’s Manual.
	Voice Recognition (if so equipped)	For additional information regarding Voice Recognition, refer to “NISSAN Voice Recognition System” in this section.

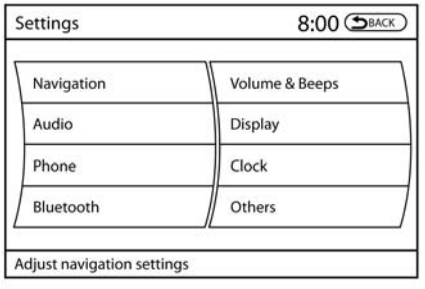

LHA1236

HOW TO USE THE SETTING BUTTON

Press the SETTING button. This screen displays and adjusts various settings and functions that are available for your vehicle. When the amber indicator next to an item is illuminated, the feature is enabled.

Menu Item		Result
Navigation		For additional information, refer to the separate Navigation System Owner's Manual.
Audio		For additional information, refer to "Audio system" in this section.
Phone		For additional information, refer to "Bluetooth® Hands-Free Phone System with Navigation System" in this section.
Bluetooth		For additional information, refer to "Bluetooth® Hands-Free Phone System with Navigation System" in this section.
Volume & Beeps		Adjusts the volume and beep settings.
	Navigation volume	For additional information, refer to the separate Navigation System Owner's Manual.
	Phone Volume	For additional information, refer to "Bluetooth® Hands-Free Phone System with Navigation System" in this section.
	Switch Beeps	Toggles on or off the beep sound that is heard when a control panel button is pressed.
Rear Display (if so equipped)		Adjusts the settings for the rear displays.

Menu Item			Result
	Display Control		Select the “ON” key for either the left of right display to alternately enable or disable the display to the left or right rear passengers. If the display is enabled, select the key (DVD, USB, front AUX or rear AUX) that you wish to have displayed on the corresponding screen. The front AUX setting is for devices plugged into the AUX jacks in the center console. The rear AUX setting is for the devices plugged into the AUX jacks on the back of the center console.
	Auto Display		Toggles ON or OFF the Auto Display option. When the Auto Display is ON, the rear displays will automatically turn on when a movie is played from a DVD or USB device.
	Rear Speaker		Toggles ON or OFF the rear speaker volume.
Display			Adjusts the settings for the display screen
	Brightness/Contrast		Adjusts the brightness or contrast of the map background.
	Display off		Toggles the display screen on and off. The amber indicator is illuminated when the display is set to “On”. When the display is set to “Off” and a control panel, audio or heater and air conditioner button is pressed, the display will resume until that operation is finished. To turn the display back on, press and hold the ☼/☽ OFF button for approximately 2 seconds or return to the display setting screen and adjust the setting.
	Background Color		Adjusts the display screen between day and night mode.
	Color Theme		Changes the color of the background, arrows and bars on the screen.
Clock			Adjusts the clock settings.
	On-screen Clock		Toggles on or off the clock in the upper right corner of the display.
	Clock Format		Toggles between a 12-hour and 24-hour clock.
	Offset (hour), Offset (min)		Manually adjusts the hours and minutes of the clock.
	Daylight Savings Time		Toggles on or off the daylight savings time.
	Time Zone		Adjusts the time zone. Choose a time zone from the available list.
Others			Select the “Others” key using the NISSAN controller. Voice Recognition, language and units setting screen will be displayed.
	Language & Units		Adjusts the language and unit settings shown on the display.
		Select Language	Changes the language of the menus on the display screen. If you touch the “Francais” key, French language screens will be displayed, so please use the French Owner’s Manual. To obtain a French Owner’s Manual, refer to “Owner’s Manual/Service Manual Order Information” in the “Technical and consumer information” section.
		Select Units	Changes the units used to “US” (mi, °F, MPG) or “Metric” (km, °C, L/100km).

Menu Item		Result
	Voice Recognition	For additional information, refer to “NISSAN Voice Recognition system” in this section.
	Camera Settings	Touching the Camera key will bring up the Camera settings screen.
	Image Viewer	For additional information, refer to “Image viewer” in this section.

☼/☽ OFF BUTTON

To change the display brightness, press the ☼/☽ OFF button. Pressing the button again will change the display to the day AUTO or the night ☽ display. The brightness can then be adjusted using the NISSAN controller.

If no operation is performed within 5 seconds, the display will return to the previous display.

Press and hold the ☼/☽ OFF button for more than 2 seconds to turn the display off. Press the button again to turn the display on.

USING THE IMAGE VIEWER

When a compatible portable storage device is plugged into the USB connection port located in the center console, compatible image files stored on the device can be viewed on the control panel display.

Connecting the portable storage device

To connect a portable storage device to the system so that images stored on it can be viewed, insert the device into the USB connection port located in the center console.

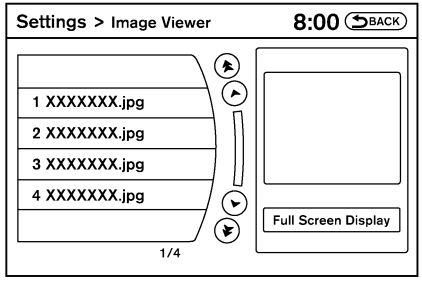

LHA1309

Viewing images

To view an image, press the SETTING button and then select the “Image Viewer” key with the NISSAN controller. The Image Viewer screen will be displayed.

A list of compatible images on the storage device is displayed on the left side of the screen, while the selected image is displayed on the right side of the screen. To choose a different picture from the list, use the NISSAN controller to scroll through the list once the desired image is highlighted.

Select the “Full Screen Display” key and press the ENTER button to view a full screen version of the image.

Image requirements:

- Image type: JPEG
- File extensions: *.jpg, *.jpeg
- Maximum resolution: 2048 x 1536
- Maximum size: 2 MB
- Colors: 32,768 (15-bit)
- Maximum file name length: 253 bytes (display only shows first 8 characters)
- Maximum folders: 500
- Maximum images per folder: 1,024

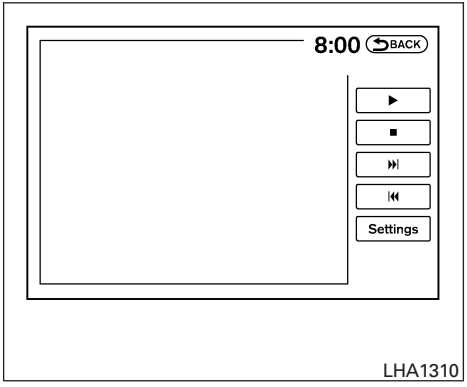

Viewing images in a slideshow

To view all of the images on the device in a slideshow, first enter the full screen mode while viewing one of the images. The slideshow control buttons are located on the right side of the screen.

Select the play key ▶ to begin the slideshow. The images shown on the screen will periodically change at a given interval of time. To skip through the images without waiting for them to change automatically, select the ⏮ key to skip backward or the ⏭ key to skip forward. Select the stop key ■ to end the slideshow and return to the full screen display of the image currently on the screen.

Slideshow settings

While in slideshow mode, the following settings can be accessed:

Settings			
	Slideshow Speed		Changes the frequency at which images are changed during a slideshow. Choose one of the options on the screen or “No Auto Change” to have the images not change automatically.
	Slideshow Order		
		Random	Changes images in a random order when selected.
		Order List	Changes images in the order in which they are saved on the USB device.

REARVIEW MONITOR (if so equipped)

When the shift lever is shifted into the R (Reverse) position, the monitor display shows the view to the rear of the vehicle.

⚠ WARNING

Failure to follow the warnings and instructions for proper use of the RearView Monitor could result in serious injury or death.

- **The RearView Monitor is a convenience but it is not a substitute for proper backing. Always turn and look out the windows, and check mirrors to be sure that it is safe to move before operating the vehicle. Always back up slowly.**
- **The system is designed as an aid to the driver in showing large stationary objects directly behind the vehicle, to help avoid damaging the vehicle.**
- **The system cannot completely eliminate blind spots and may not show every object.**
- **Underneath the bumper and the corner areas of the bumper cannot be viewed on the RearView Monitor because of its monitoring range limitation. The system will not show small objects below the bumper, and may not show objects close to the bumper or on the ground.**
- **Objects viewed in the RearView Monitor differ from actual distance because a wide-angle lens is used.**
- **Objects in a RearView Monitor will appear visually opposite than when viewed in the rear view and outside mirrors.**
- **Make sure that the trunk is securely closed when backing up.**
- **Do not put anything on the rearview camera. The rearview camera is installed above the license plate.**
- **When washing the vehicle with high pressure water, be sure not to spray it around the camera. Otherwise, water may enter the camera unit causing water condensation on the lens, a malfunction, fire or an electric shock.**
- **Do not strike the camera. It is a precision instrument. Otherwise, it may malfunction or cause damage resulting in a fire or an electric shock.**

⚠ CAUTION

There is a plastic cover over the camera. Do not scratch the cover when cleaning dirt or snow from the cover.

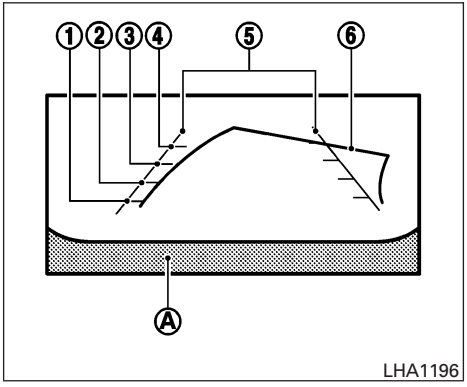

HOW TO READ THE DISPLAYED LINES

Guiding lines which indicate the vehicle width and distances to objects with reference to the vehicle body line Ⓐ are displayed on the monitor.

Distance guide lines:

Indicate distances from the vehicle body.

- Red line ①: approx. 1.5 ft (0.5 m)
- Yellow line ②: approx. 3 ft (1 m)
- Green line ③: approx. 7 ft (2 m)
- Green line ④: approx. 10 ft (3 m)

Vehicle width guide lines ⑤:

Indicate the vehicle width when backing up.

Predictive course lines ⑥:

Indicate the predictive course when backing up. The predictive course lines will be displayed on the monitor when the shift lever is in the R (Reverse) position and the steering wheel is turned. The predictive course lines will move depending on how much the steering wheel is turned and will not be displayed while the steering wheel is in the neutral position.

The vehicle width guide lines and the width of the predictive course lines are wider than the actual width and course.

HOW TO PARK WITH PREDICTED COURSE LINES

⚠ WARNING

- **Always turn and check that it is safe to do so before backing up. Always back up slowly.**
- **If the tires are replaced with different sized tires, the predictive course lines may be displayed incorrectly.**
- **On a snow-covered or slippery road, there may be a difference between the predictive course line and the actual course line.**
- **The distance guide line and the vehicle width line should be used as a reference only when the vehicle is on a level paved surface. The distance viewed on the monitor is for reference only and may be different than the actual distance between the vehicle and displayed objects.**
- **When backing up the vehicle up a hill, objects viewed in the monitor are further than they appear. When backing up the vehicle down a hill, objects viewed in the monitor are closer than they appear. Use the inside mirror or glance over your shoulder to properly judge distances to other objects.**

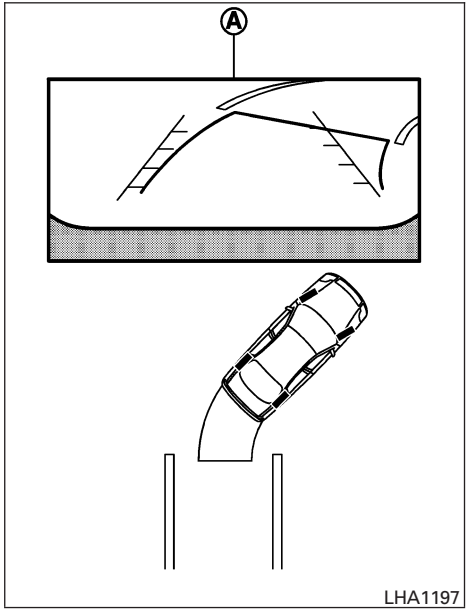

1. Visually check that the parking space is safe before parking your vehicle.
2. The rear view of the vehicle is displayed on the screen Ⓐ when the shift lever is moved to the R (Reverse) position.

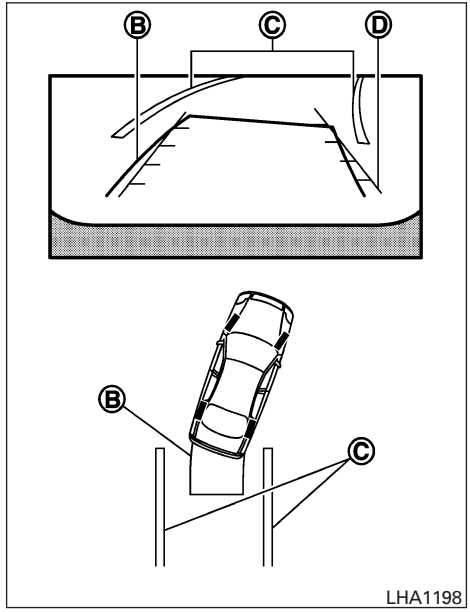

3. Slowly back up the vehicle adjusting the steering wheel so that the predicted course lines Ⓑ enter the parking space Ⓒ.
4. Maneuver the steering wheel to make the vehicle width guide lines Ⓓ parallel to the parking space Ⓒ. When the back of the vehicle enters the parking space Ⓒ, maneuver the steering wheel to make the vehicle width guide lines Ⓓ parallel to the parking space Ⓒ.
5. When the vehicle is parked in the space completely, move the shift lever to the P (Park) position and apply the parking brake.

DIFFERENCE BETWEEN PREDICTED AND ACTUAL DISTANCES

The distance guide line and the vehicle width guide line should be used as a reference only when the vehicle is on a level, paved surface. The distance viewed on the monitor is for reference only and may be different than the actual distance between the vehicle and displayed objects.

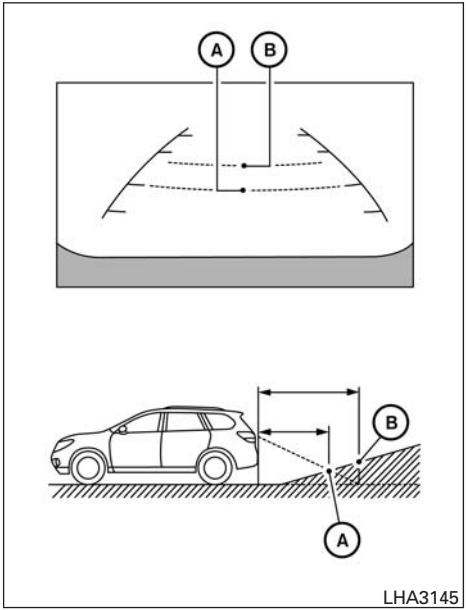

Backing up on a steep uphill

When backing up the vehicle up a hill, the distance guide lines and the vehicle width guide lines are shown closer than the actual distance. For example, the display shows 1.0 m (3 ft) to the place Ⓐ, but the actual 1.0 m (3 ft) distance on the hill is the place Ⓑ. Note that any object on the hill is further than it appears on the monitor.

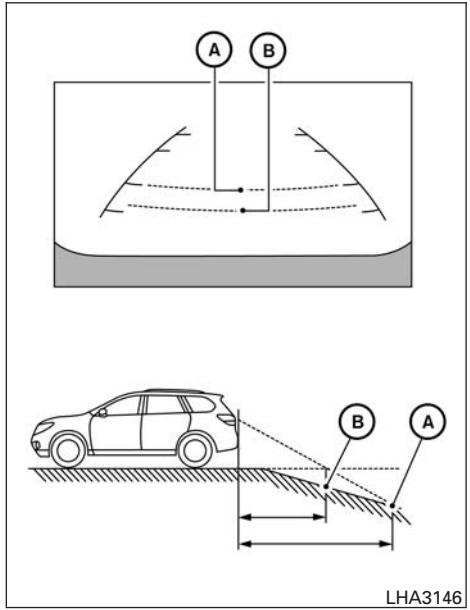

Backing up on a steep downhill

When backing up the vehicle down a hill, the distance guide lines and the vehicle width guide lines are shown farther than the actual distance. For example, the display shows 3 ft (1.0 m) to the place Ⓐ, but the actual 3 ft (1.0 m) distance on

the hill is the place Ⓑ. Note that any object on the hill is closer than it appears on the monitor.

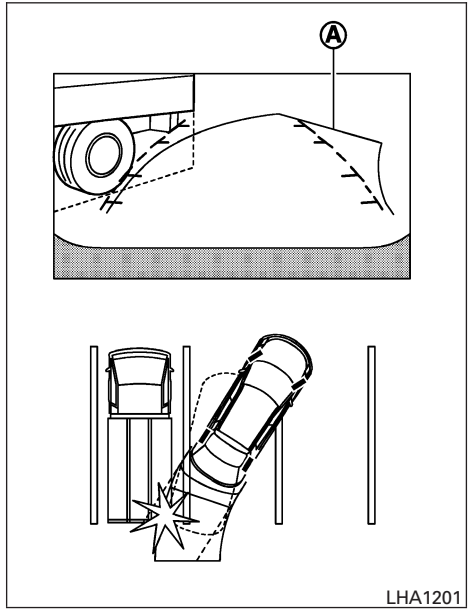

Backing up near a projecting object

The predicted course lines Ⓐ do not touch the object in the display. However, the vehicle may hit the object if it projects over the actual backing up course.

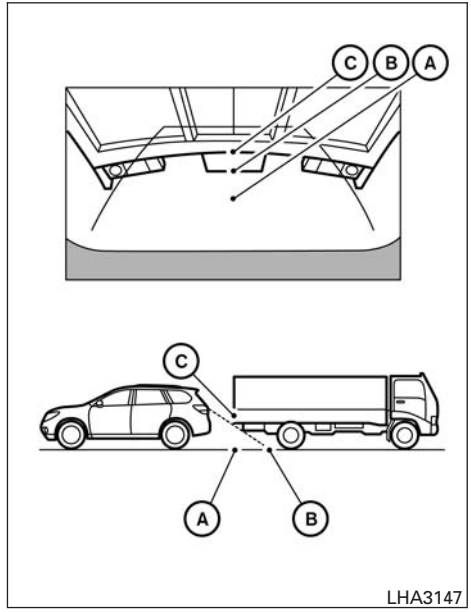

Backing up behind a projecting object

The position Ⓒ is shown farther than the position Ⓑ in the display. However, the position Ⓒ is actually at the same distance as the position Ⓐ. The vehicle may hit the object when backing up to

the position Ⓐ if the object projects over the actual backing up course.

PREDICTED COURSE LINE SETTINGS

To turn on or off the predicted course line display, press the SETTING button, select the “Camera” key and press the ENTER button.

Predicted Course Lines:

When this item is turned on, the predicted course lines will be displayed on the monitor when the shift lever is the R (Reverse) position.

HOW TO ADJUST THE SCREEN

To adjust the Display ON/OFF, Brightness, Tint, Color, Contrast and Black Level of the RearView Monitor, press the SETTING button with the RearView Monitor on and select the “Display” key. Select one of the items and change the value by touching the “+” or “-” key or by turning the NISSAN controller.

Do not adjust the Brightness, Tint, Color, Contrast and Black Level of the RearView Monitor while the vehicle is moving. Make sure the parking brake is firmly applied.

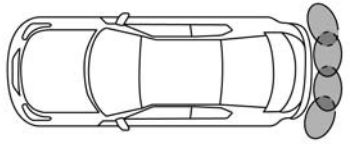

LHA2549

PARKING SENSOR / REAR CENTER SONAR

The sonar (parking sensor) sounds a tone to inform the driver of obstacles near the bumper.

⚠ WARNING

- **The sonar (parking sensor) is a convenience feature. It is not a substitute for proper parking.**
- **The system is deactivated at speeds above 6 mph (10km/h). It is reactivated at lower speeds.**
- **The driver is always responsible for safety during parking and other maneuvers.**
- **Always look around and check that it is safe to move before parking.**
- **Read and understand the limitations of the sonar (parking sensor) as contained in this section.**
- **The colors of the sonar indicators and the distance guide lines in the front, front-wide, rear and rear-wide views indicate different distances to the object.**
- **Inclement weather or ultrasonic sources such as an automatic car wash, a truck’s compressed-air brakes or a pneumatic drill may affect the function of the system; this may include reduced performance or a false activation.**
- **This function is designed as an aid to the driver in detecting large stationary objects to help avoid damaging the vehicle.**
- **The system is not designed to prevent contact with small or moving objects.**

- **The system will not detect small objects below the bumper, and may not detect objects close to the bumper or on the ground.**
- **The system may not detect the following objects:**
  - **Fluffy objects such as snow, cloth, cotton, glass or wool.**
  - **Thin objects such as rope, wire or chain.**
  - **Wedge-shaped objects.**
- **If your vehicle sustains damage to the bumper fascia, leaving it misaligned or bent, the sensing zone may be altered causing inaccurate measurement of objects or false alarms.**

⚠ CAUTION

- **Excessive noise (such as audio system volume or an open vehicle window) will interfere with the tone and it may not be heard.**
- **Keep the surface of the sonar sensors (located on the rear bumper fascia) free from accumulations of snow, ice and dirt. Do not scratch the surface of the sonar sensors when cleaning. If the sensors are covered, the accuracy of the sonar function will be diminished.**

The system gives the tone for rear objects when the shift lever is in the R (Reverse) position.

When the camera image is shown on the display, the system shows the sonar indicator regardless of the shift selector position.

The system is deactivated at speeds above 6 mph (10 km/h). It is reactivated at lower speeds.

When the objects are detected, the indicator (green) appears and blinks and the tone sounds intermittently. When the vehicle moves closer to the object, the color of the indicator turns yellow and the rate of the blinking and the rate of the tone increase. When the vehicle is very close to the object, the indicator stops blinking and turns red, and the tone sounds continuously.

The intermittent tone will stop after 3 seconds when an object is detected by only the corner sonar and the distance does not change.

The tone will stop when the object is no longer near the vehicle.

In the below cases, the sonar will be turned back on automatically:

- When the shift lever is in the R (Reverse) position.
- When the CAMERA button is pressed and a screen other than the camera view is shown on the display.
- When vehicle speed decreases below approximately 6 mph (10 km/h).
- When the ignition switch is placed in the OFF position and turned back to the ON position again.

OPERATING TIPS

- When the shift lever is shifted to the R (Reverse) position, the display screen automatically changes to the RearView Monitor mode. However, the radio can be heard.
- When the view is switched, the display images on the screen may be displayed with some delay.
- When the temperature is extremely high or low, the screen may not clearly display objects. This is not a malfunction.
- When strong light is directly coming on the camera, objects may not be displayed clearly. This is not a malfunction.
- Vertical lines may be seen in objects on the screen. This is due to strong reflected light from the bumper. This is not a malfunction.
- The screen may flicker under fluorescent light. This is not a malfunction.
- The colors of objects on the RearView Monitor may differ somewhat from those of the actual color of the objects. This is not a malfunction.
- Objects on the monitor may not be clear in a dark environment. This is not a malfunction.
- If dirt, rain or snow accumulates on the camera, the RearView Monitor may not display objects clearly. Clean the camera.
- Do not use wax on the camera window. Wipe off any wax with a clean cloth dampened with mild detergent diluted with water.

⚠ CAUTION

- **Do not use alcohol, benzine or thinner to clean the camera. This will cause discoloration. To clean the camera, wipe with a cloth dampened with diluted mild cleaning agent and then wipe with a dry cloth.**
- **Do not damage the camera as the monitor screen may be adversely affected.**

AROUND VIEW® MONITOR (if so equipped)

With the ignition switch in the ON position, press the CAMERA button or move the shift lever to the R (Reverse) position to operate the Around View Monitor. The monitor displays various views of the position of the vehicle in a split screen format.

⚠ WARNING

- **The Around View Monitor is a convenience feature. It is not a substitute for proper vehicle operation because it has areas where objects cannot be viewed. The four corners of the vehicle in particular are blind spots where objects do not appear in the bird's-eye, front or rear views. Always look out the windows and check with your own eyes to be sure that it is safe to move before operating the vehicle. Always operate the vehicle slowly.**
- **The driver is always responsible for safety during parking and other maneuvers.**
- **Do not use the Around View Monitor with the outside mirror in the stored position, and make sure that the liftgate is securely closed when operating the vehicle using the Around View Monitor.**

- **The distance between objects viewed on the Around View Monitor differs from the actual distance.**
- **The cameras are installed on the front grille, the outside mirrors and above the rear license plate. Do not put anything on the cameras.**
- **When washing the vehicle with high-pressure water, be sure not to spray it around the cameras. Otherwise, water may enter the camera unit causing water condensation on the lens, a malfunction, fire or an electric shock.**
- **Do not strike the cameras. They are precision instruments. Doing so could cause a malfunction or cause damage resulting in a fire or an electric shock.**

Available views

- Bird's-Eye View
  The surrounding view of the vehicle from above.
- Front-Side View
  The view around and ahead of the front passenger's side wheel.
- Front View
  An approximately 150–degree view of the front of the vehicle.
- Front-Wide View
  An approximately 180–degree view of the front of the vehicle.
- Rearview
  An approximately 130.5-degree view of the rear of the vehicle.
- Rear-Wide View
  An approximately 180–degree view of the rear of the vehicle.

The system is designed as an aid to the driver in situations such as slot parking or parallel parking.

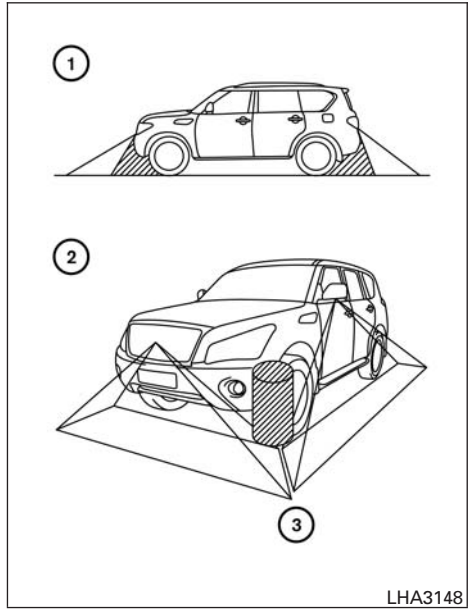

There are some areas where the system will not show objects and the system does not warn of moving objects. When in the front or rear view display, an object below the bumper or on the ground may not be viewed ①. When in the

bird's-eye view, a tall object near the seam ③ of the camera viewing areas will not appear in the monitor ②.

⚠ WARNING

- **The Around View Monitor is a convenience features. It is not a substitute for proper vehicle operation because it has areas where objects cannot be viewed. Always look out the windows and check to be sure that it is safe to move.**
- **The driver is always responsible for safety during parking and other maneuvers.**
- **Do not use the Around View Monitor with the outside mirror in the stored position, and make sure that the liftgate is securely closed when operating the vehicle using the Around View Monitor.**
- **The distance between objects viewed on the Around View Monitor differs from the actual distance.**
- **The cameras are installed on the front grille, the outside mirrors and above the rear license plate. Do not put anything on the cameras.**
- **When washing the vehicle with high-pressure water, be sure not to spray it around the cameras. Otherwise, water may enter the camera unit causing water condensation on the lens, a malfunction, fire or an electric shock.**
- **Do not strike the cameras. They are precision instruments. Doing so could cause a malfunction or cause damage resulting in a fire or an electric shock.**

⚠ CAUTION

Do not scratch the camera lens when cleaning dirt or snow from the front of the camera.

AVAILABLE VIEWS

⚠ WARNING

- **The distance guide line and the vehicle width line should be used as a reference only when the vehicle is on a paved, level surface. The distance viewed on the monitor may be different than the actual distance between the vehicle and displayed objects.**
- **The distance between objects viewed in the rearview differs from the actual distance because a wide-angle lens is used.**
- **Use the displayed lines and the bird's-eye view as a reference. The lines and the bird's-eye view are greatly affected by the number of occupants, fuel level, vehicle position, road condition and road grade.**
- **If the tires are replaced with different sized tires, the predictive course lines and the bird's-eye view may be displayed incorrectly.**
- **When driving the vehicle up a hill, objects viewed in the monitor are further than they appear. When driving the vehicle down a hill, objects viewed in the monitor are closer than they appear. Use the mirrors or actually look to properly judge distances to other objects.**
- **Use the mirrors or actually look to properly judge distances to other objects.**
- **Objects in the monitor will appear visually opposite than when viewed in the rearview and outside mirrors.**

- **On a snow-covered or slippery road, there may be a difference between the predictive course lines and the actual course line.**
- **The displayed lines on the rearview will appear slightly off to the right, because the rearview camera is not installed in the rear center of the vehicle.**
- **The vehicle width and predictive course lines are wider than the actual width and course.**

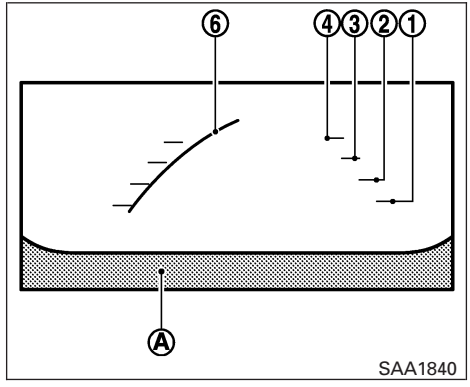

Front view

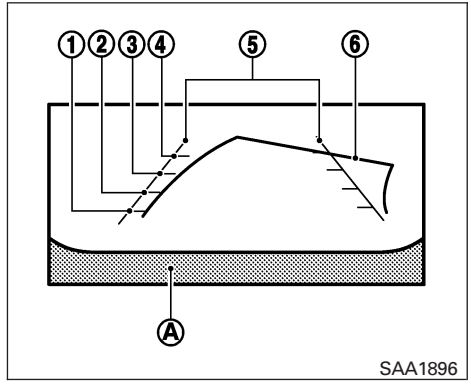

Rear view

Front and rear view

Guiding lines, which indicate the vehicle width and distance to objects with reference to the vehicle body line Ⓐ, are displayed on the monitor.

Distance guide lines

Indicate distances from the vehicle body:

- Red line ①: approximately 0.5 m (1.5 ft)
- Yellow line ②: approximately 1 m (3 ft)
- Green line ③: approximately 2 m (7 ft)
- Green line ④: approximately 3 m (10 ft)

Vehicle width guide lines ⑤

Indicate the vehicle width when backing up.

Predictive course lines ⑥

Indicate the predictive course when operating the vehicle. The predictive course lines will be displayed on the monitor when the steering wheel is turned. The predictive course lines will move depending on how much the steering wheel is turned and will not be displayed while the steering wheel is in the straight ahead position.

The front view will not be displayed when the vehicle speed is above 10 km/h (6 mph).

NOTE:

When the monitor displays the front view and the steering wheel turns about 90 degrees or less from the neutral position, both the right and left predictive course lines ⑥ are displayed. When the steering wheel turns about 90 degrees or more, a line is displayed only on the opposite side of the turn.

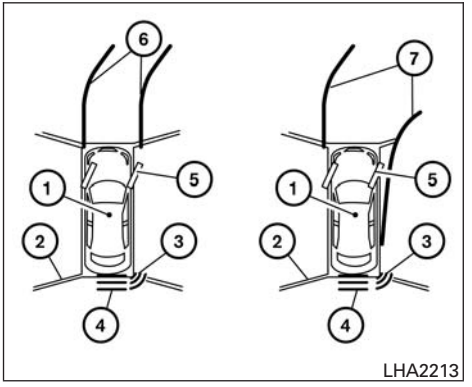

Bird's-eye view

The bird's-eye view shows the overhead view of the vehicle, which helps confirm the vehicle position and the predicted course to a parking space.

The vehicle icon ① shows the position of the vehicle. Note that the size of the vehicle icon on the bird's-eye view may differ somewhat from the actual vehicle.

The areas that the cameras cannot cover ② are indicated in black.

The non-viewable area ② is highlighted in yellow for several seconds after the bird's-eye view is displayed. It will be shown only the first time after the ignition switch is placed in the ON position.

When the corner of the vehicle moves closer to an object, the corner sonar indicators ③ appear. When the center of the vehicle moves close to an object, the center sonar indicator ④ appears (if so equipped).

The driver can check the direction and angle of the tire on the display by tire icon ⑤ when driving the vehicle forward or backward.

Predictive course lines (⑥ and ⑦) indicate the predictive course when operating the vehicle. The predictive course lines will be displayed on the monitor when the steering wheel is turned. The predictive course lines will move depending on how much the steering wheel is turned and will not be displayed while the steering wheel is in the neutral position.

When the monitor displays the front view and the steering wheel turns about 90 degrees or less from the neutral position, the two green predictive course lines ⑥ are shown in front of the vehicle.

When the steering wheel turns about 90 degrees or more, one green predictive course lines is shown in front of the vehicle and other green predictive course lines ⑦ is shown at side of the vehicle.

When the monitor displays the rear view, the predictive course lines are shown at back of the vehicle.

⚠ WARNING

- **Objects in the bird's-eye view will appear further than the actual distance because the bird's-eye view is a pseudo view that is processed by combining the views from the cameras on the outside mirrors, the front and the rear of the vehicle.**
- **Tall objects, such as a curb or vehicle, may be misaligned or not displayed at the seam of the views.**
- **Objects that are above the camera cannot be displayed.**
- **The view of the bird's-eye view may be misaligned when the camera position alters.**
- **A line on the ground may be misaligned and is not seen as being straight at the seam of the views. The misalignment will increase as the line proceeds away from the vehicle.**
- **Tire angle display does not indicate the actual tire angle.**

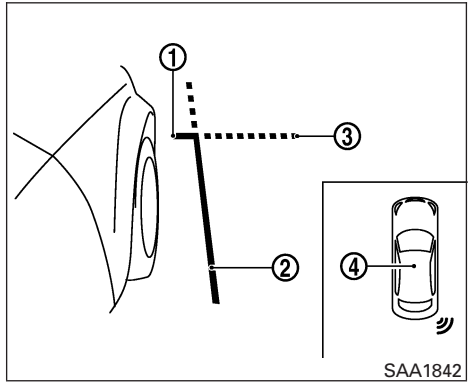

Front-side view

Guiding lines

Guiding lines that indicate the width and the front end of the vehicle are displayed on the monitor.

The front-of-vehicle line ① shows the front part of the vehicle.

The side-of-vehicle line ② shows the vehicle width including the outside mirror.

The extensions ③ of both the front ① and side ② lines are shown with a green dotted line.

The rear sonar indicator will appear when the rear of the vehicle moves closer to an object ④.

⚠ CAUTION

- **The turn signal light may look like the side-of-vehicle line. This is not a malfunction.**

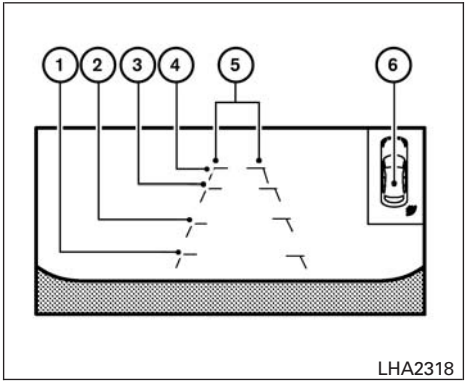

Front-wide view

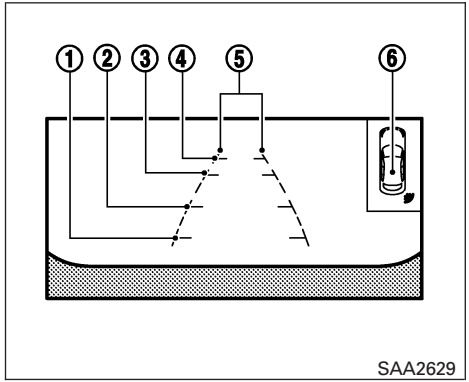

Rear-wide view

Front-wide and rear-wide view

The front-wide and rear-wide view shows a wider area on the entire screen and allows the checking of the blind corners on right and left sides. The rear-wide view displays an approximately 180-degree area while the front-view and rear-view display an approximately 150-degree area. The predictive course lines are not displayed when using the front-wide and rear-wide view.

Distance guide lines

Indicates distances from the vehicle body:

- Red line ①: approximately 1.5 ft (0.5 m)
- Yellow line ②: approximately 3 ft (1 m)
- Green line ③: approximately 7 ft (2 m)
- Green line ④: approximately 10 ft (3 m)

Vehicle width guide lines ⑤

Indicate the vehicle width when backing up.

The corner sonar indicator ⑥ will appear when a corner of the vehicle moves closer to an object.

DIFFERENCE BETWEEN PREDICTIVE AND ACTUAL DISTANCES

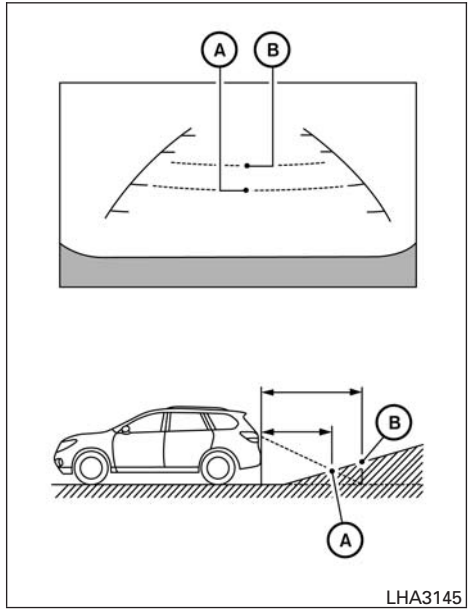

Backing up on a steep uphill

When backing up the vehicle up a hill, the distance guide lines and the vehicle width guide lines are shown closer than the actual distance. For example, the display shows 1.0 m (3 ft) to the place Ⓐ, but the actual 1.0 m (3 ft) distance on the hill is the place Ⓑ. Note that any object on the hill is further than it appears on the monitor.

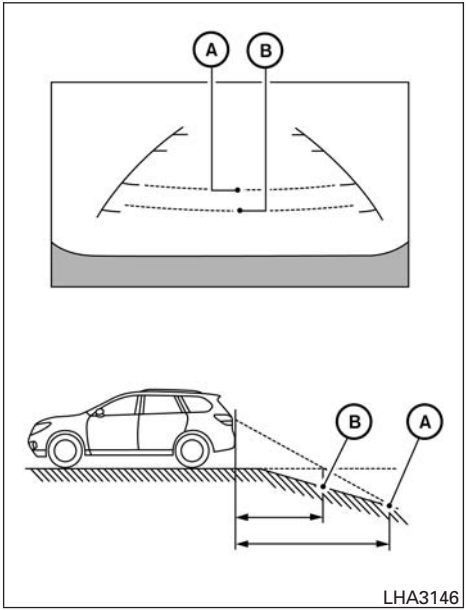

Backing up on a steep downhill

When backing up the vehicle down a hill, the distance guide lines and the vehicle width guide lines are shown farther than the actual distance. For example, the display shows 3 ft (1.0 m) to the place Ⓐ, but the actual 3 ft (1.0 m) distance on the hill is the place Ⓑ. Note that any object on the hill is closer than it appears on the monitor.

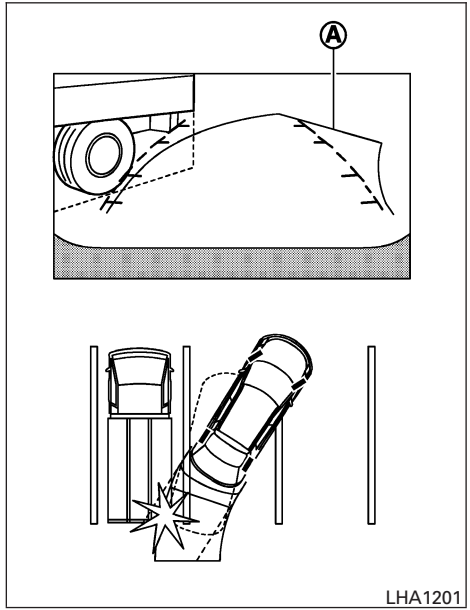

Backing up near a projecting object

The predicted course lines Ⓐ do not touch the object in the display. However, the vehicle may hit the object if it projects over the actual backing up course.

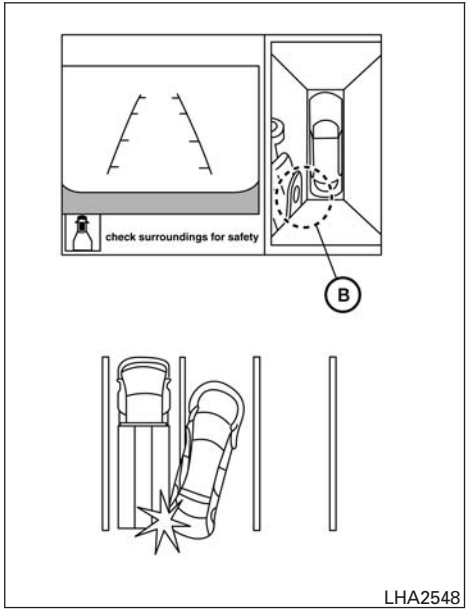

There may be a small distance visible between the vehicle and the object in the bird-eye view on the display Ⓑ.

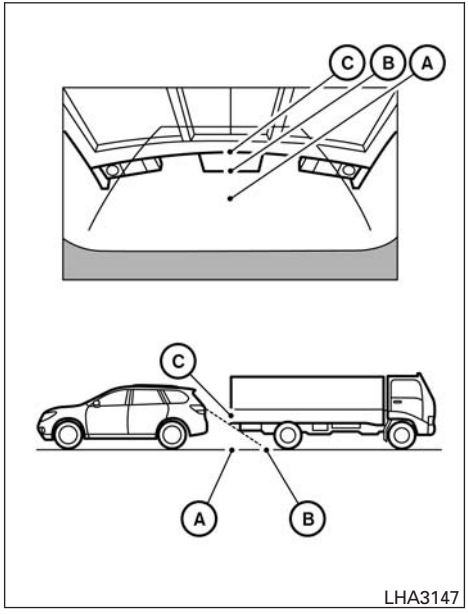

Backing up behind a projecting object

The position Ⓒ is shown farther than the position Ⓑ in the display. However, the position Ⓒ is actually at the same distance as the position Ⓐ. The vehicle may hit the object when backing up to the position Ⓐ if the object projects over the actual backing up course.

HOW TO SWITCH THE DISPLAY

With the ignition switch in the ON position, press the CAMERA button or move the shift lever to the R (Reverse) position to operate the Around View Monitor.

The Around View® Monitor can display two split view as well as a single view of the front-wide view or rear-wide view. Select the “Change View” key to switch between the available views.

If the shift lever is not in the R (Reverse) position, the available views are:

- Front-view/bird's-eye view split screen
- Front-view/front-side view split screen
- Front-wide view

If the shift lever is in the R (Reverse) position, the available views are:

- Rearview/bird's-eye view split screen
- Rearview/front-side view split screen
- Rear-wide view

The display will switch from the Around View Monitor screen when:

- When the shift lever is in the D (Drive) position and the vehicle speed increases above approximately 6 mph (10 km/h).
- When a different screen is selected.

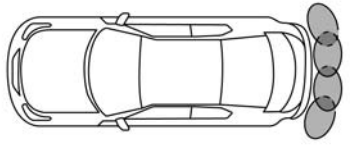

LHA2549

PARKING SENSOR / REAR CENTER SONAR

The sonar (parking sensor) sounds a tone to inform the driver of obstacles near the bumper.

The colors of the sonar indicators and the distance guide lines in the rear view indicate different distances to the object.

⚠ WARNING

- **The sonar (parking sensor) is a convenience feature. It is not a substitute for proper parking.**
- **The system is deactivated at speeds above 6 mph (10 km/h). It is reactivated at lower speeds.**
- **The driver is always responsible for safety during parking and other maneuvers.**
- **Always look around and check that it is safe to move before parking.**
- **Read and understand the limitations of the sonar (parking sensor) as contained in this section.**
- **Inclement weather or ultrasonic sources such as an automatic car wash, a truck's compressed-air brakes or a pneumatic drill may affect the function of the system; this may include reduced performance or a false activation.**
- **This function is designed as an aid to the driver in detecting large stationary objects to help avoid damaging the vehicle.**

- **The system is not designed to prevent contact with small or moving objects.**
- **The system will not detect small objects below the bumper, and may not detect objects close to the bumper or on the ground.**
- **The system may not detect the following objects:**
  - **Fluffy objects such as snow, cloth, cotton, glass or wool.**
  - **Thin objects such as rope, wire or chain.**
  - **Wedge-shaped objects.**
- **If your vehicle sustains damage to the bumper fascia, leaving it misaligned or bent, the sensing zone may be altered causing inaccurate measurement of objects or false alarms.**

⚠ CAUTION

- **Excessive noise (such as audio system volume or an open vehicle window) will interfere with the tone and it may not be heard.**
- **Keep the surface of the sonar sensors (located on the rear bumper fascia) free from accumulations of snow, ice and dirt. Do not scratch the surface of the sonar sensors when cleaning. If the sensors are covered, the accuracy of the sonar function will be diminished.**

The system gives the tone for rear objects when the shift lever is in the R (Reverse) position.

The system is deactivated at speeds above 10 km/h (6 mph). It is reactivated at lower speeds.

When the objects are detected, the indicator (green) appears and blinks and the tone sounds intermittently. When the vehicle moves closer to the object, the color of the indicator turns yellow and the rate of the blinking and the rate of the tone increase. When the vehicle is very close to the object, the indicator stops blinking and turns red, and the tone sounds continuously.

The intermittent tone will stop after 3 seconds when an object is detected by only the corner sonar and the distance does not change.

The tone will stop when the object is no longer near the vehicle.

In the below cases, the sonar will be turned back on automatically:

- When the shift lever is in the R (Reverse) position.
- When vehicle speed decreases below approximately 10 km/h (6 mph).
- When the ignition switch is placed in the OFF position and turned back to the ON position again.
- The sonar system can be permanently turned off using the meter settings.

HOW TO ADJUST THE SCREEN VIEW

To adjust the Display ON/OFF, Brightness, Tint, Color, Contrast and Black Level of the Around View Monitor, press the SETTING button with the Around View Monitor on, select the item key and adjust the level using the NISSAN controller.

Do not adjust the Brightness, Tint, Color, Contrast and Black Level of the Around View Monitor while the vehicle is moving. Make sure the parking brake is firmly applied.

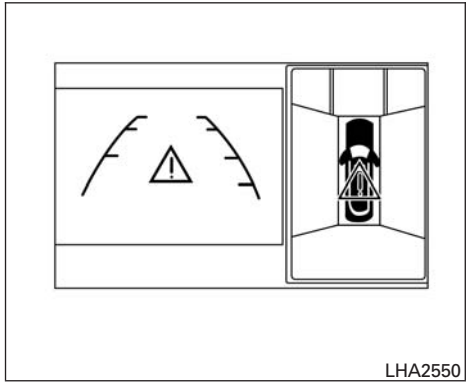

VIEW MALFUNCTION

When the "!" icon is displayed on the screen, the Around View Monitor may not be calibrated correctly. This will not hinder normal driving function but the system should be inspected by a NISSAN dealer.

OPERATING TIPS

⚠ CAUTION

- **Do not use alcohol, benzine or thinner to clean the camera. This will cause discoloration. To clean the camera, wipe with a cloth dampened with a diluted mild cleaning agent and then wipe with a dry cloth.**
- **Do not damage the camera as the monitor screen may be adversely affected.**

- The screen displayed on the Around View Monitor will automatically return to the previous screen 3 minutes after the CAMERA button has been pressed with the shift lever in a position other than the R (Reverse) position.
- When the view is switched, the display images on the screen may be displayed in some delay.
- When the temperature is extremely high or low, the screen may not display objects clearly. This is not a malfunction.
- When strong light directly shines on the camera, objects may not be displayed clearly. This is not a malfunction.

- The screen may flicker under fluorescent light. This is not a malfunction.
- The colors of objects on the Around View Monitor may differ somewhat from the actual color of objects. This is not a malfunction.
- Objects on the Around View Monitor may not be clear and the color of the object may differ in a dark environment. This is not a malfunction.
- There may be differences in sharpness between each camera view of the bird's-eye view.
- If dirt, rain or snow accumulates on the camera, the Around View Monitor may not display objects clearly. Clean the camera.
- Do not use wax on the camera lens. Wipe off any wax with a clean cloth that has been dampened with a mild detergent diluted with water.

VENTS

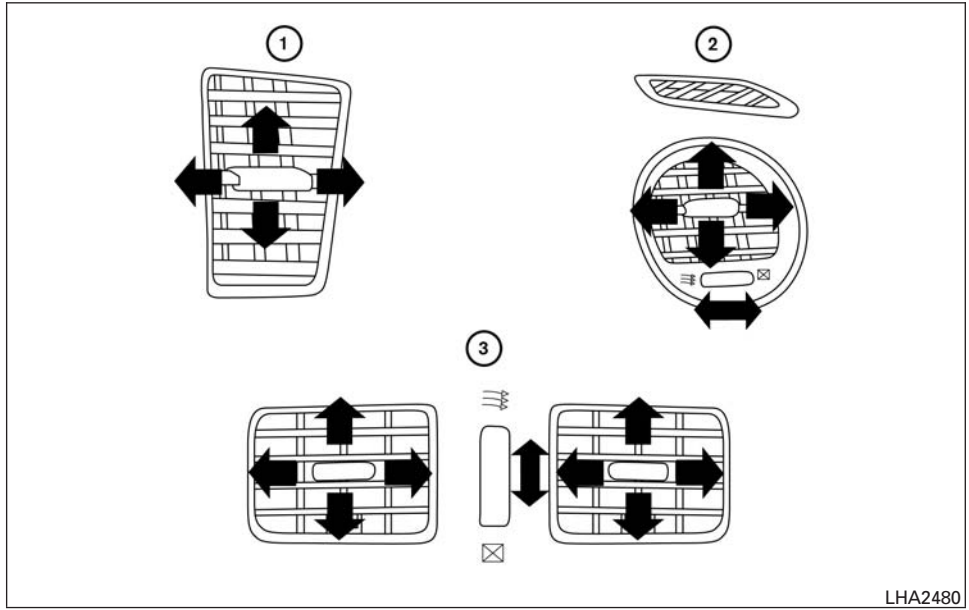

Adjust air flow direction for the center vents ①, driver's and passenger's side vents ②, and rear vents ③ by moving the vent slide and/or vent assemblies.

Open or close the vents using the dial. Move the dial toward the ≋ to open the vents or toward the ⊠ to close them.

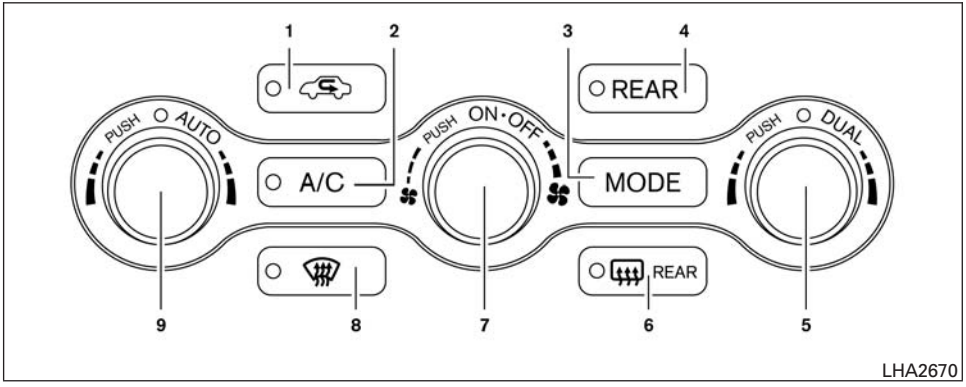

1. (air recirculation) button
2. A/C (air conditioner) ON/OFF button
3. MODE (manual air flow control) button
4. REAR button
5. DUAL (passenger's side temperature control) ON/OFF button/Temperature control knob (passenger's side)
6. (rear window and outside mirror defroster) button
7. PUSH ON/OFF button/ (fan speed control) knob
8. (front defroster) button
9. AUTO (automatic) climate control ON button/Temperature control knob (driver's side)

WARNING

- **The air conditioner cooling function operates only when the engine is running.**
- **Do not leave children or adults who would normally require the assistance of others alone in your vehicle. Pets should also not be left alone. They could accidentally injure themselves or others through inadvertent operation of the vehicle. Also, on hot, sunny days, temperatures in a closed vehicle could quickly become high enough to cause severe or possibly fatal injuries to people or animals.**
- **Do not use the recirculation mode for long periods as it may cause the interior air to become stale and the windows to fog up.**

Start the engine and operate the controls to activate the air conditioner.

NOTE:

- Odors from inside and outside the vehicle can build up in the air conditioner unit. Odor can enter the passenger compartment through the vents.

- When parking, set the heater and air conditioner controls to turn off air recirculation to allow fresh air into the passenger compartment. This should help reduce odors inside the vehicle.

AUTOMATIC OPERATION

Cooling and/or dehumidified heating (AUTO)

This mode may be used all year round as the system automatically works to keep a constant temperature. Air flow distribution and fan speed are also controlled automatically.

1. Press the AUTO button on. (The indicator on the button will illuminate and AUTO will be displayed.)
2. Turn the temperature control dial to the left or right to set the desired temperature.

- Adjust the temperature display to about 75°F (24°C) for normal operation.
- The temperature of the passenger compartment will be maintained automatically. Air flow distribution and fan speed are also controlled automatically.
- A visible mist may be seen coming from the vents in hot, humid conditions as the air is cooled rapidly. This does not indicate a malfunction.

3. You can individually set driver's and front passenger's side temperature using each temperature control dial. When the DUAL button or passenger's side temperature dial is turned, the DUAL indicator will come on. To turn off the passenger's side temperature control, press the DUAL button.

Heating (A/C OFF)

The air conditioner does not activate. When you need to heat only, use this mode.

1. Press the A/C button. The A/C indicator will turn off.
2. Turn the temperature control dial to set the desired temperature.

- The temperature of the passenger compartment will be maintained automatically. Air flow distribution and fan speed are also controlled automatically.
- Do not set the temperature lower than the outside air temperature. Otherwise, the system may not work properly.
- Not recommended if windows fog up.

Dehumidified defrosting or defogging

1. Press the front defroster button on. (The indicator light on the button will come on.)
2. Turn the temperature control dial to set the desired temperature.

- To quickly remove ice from the outside of the windows, use the fan speed control dial to set the fan speed to maximum.
- As soon as possible after the windshield is clean, press the AUTO button to return to the automatic mode.
- When the front defroster button is pressed, the air conditioner will automatically be turned on at outside temperatures above 36°F (2°C). The air recirculate mode automatically turns off, allowing outside air to be drawn into the passenger compartment to further improve the defogging performance.

MANUAL OPERATION

Fan speed control

Turn the fan speed control dial to manually control the fan speed.

Press the AUTO button to return to automatic control of the fan speed.

Air recirculation

Press the air recirculation button to recirculate interior air inside the vehicle. The indicator light on the button will come on.

The air recirculation cannot be activated when the air conditioner is in the front defrosting mode.

Automatic intake air control

In the AUTO mode, the intake air will be controlled automatically. To manually control the intake air, press the air recirculation button. To return to the automatic control mode, press and hold the air recirculation button for about 2 seconds. The indicator light will flash twice, and then the intake air will be controlled automatically.

Air flow control

Pressing the MODE button manually controls air flow and selects the air outlet:

- — Air flows from center and side vents.
- — Air flows from center and side vents and foot outlets.
- — Air flows mainly from foot outlets.
- — Air flows from defroster and foot outlets.
- — Air flows from defroster outlets.

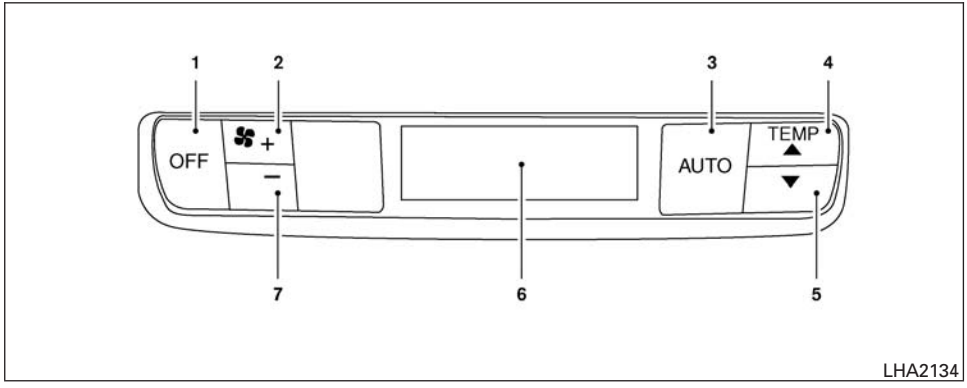

Rear automatic air conditioning system

1. OFF button
2. ✻ + (fan speed increase) button
3. AUTO button
4. ▲ (temperature increase) button
5. ▼ (temperature decrease) button
6. Display
7. ✻ - (fan speed decrease) button

To control the rear automatic air conditioning system with the front air conditioner control panel, press the REAR button. When the rear automatic air conditioning system control is on, the indicator light on the REAR button will illuminate and the front display will switch to the Rear Air-conditioning screen.

The rear automatic air conditioning system can be adjusted with the front air conditioner control panel, when the Rear Air-conditioning screen is displayed.

To adjust the front air conditioning system, press the REAR button one more time.

Automatic operation

1. Press the AUTO button. The AUTO indicator light will illuminate and “AUTO” will appear on the display.
2. Turn the temperature control dial (driver’s side) to set the desired temperature.

Manual operation

- **Temperature control**
  Press the temperature control buttons to set the desired temperature.
- **Fan speed control**
  Press the fan speed increase or decrease button to manually control the fan speed.

Rear Heating (A/C off)

1. Press the REAR button to display the Rear Air-conditioning screen on the front display when the rear automatic air conditioning system is on.
2. Press the AUTO button. The AUTO indicator light will illuminate and “AUTO” will appear on the display.
3. If the A/C indicator light illuminates, press the A/C button. The A/C indicator light will turn off.
4. Turn the temperature control dial to set the desired temperature.

- Do not set the temperature lower than the outside air temperature. Doing so may cause the temperature to not be controlled properly.

- To dehumidify the air, press the A/C key before turning on the heater.

Turning the system off

1. Press the REAR button on the front control panel until the Rear Air-conditioning screen is displayed. The REAR button indicator will remain illuminated.
2. Press the OFF button. The REAR button indicator on the front climate control panel will turn OFF, and the rear climate controls also turn OFF.

Rear control buttons

The rear seat passengers can adjust the rear automatic air conditioning system using the control switches at the rear of the center console.

The rear control buttons do not function when the Rear Air-conditioning screen is shown on the front display. To activate the rear control buttons, press the REAR button on the front air conditioner control panel and switch the screen on the front display.

- OFF button: Turns rear automatic air conditioning system off.
- Fan speed increase and decrease buttons: Adjusts the rear fan speed up or down.
- AUTO button: Turns rear automatic air conditioning system on, AUTO mode on.
- Temperature increase and decrease buttons: Adjusts the rear temperature up or down.

To turn system off

Press the OFF button.

OPERATING TIPS

- When the engine coolant temperature and outside air temperature are low, the air flow from the foot outlets may not operate for a maximum of 150 seconds. However, this is not a malfunction. After the coolant temperature warms up, air flow from the foot outlets will operate normally.

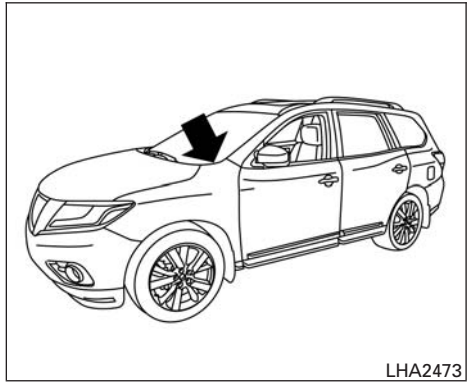

The sunload sensor, located on the top driver's side of the instrument panel, helps the system maintain a constant temperature. Do not put anything on or around this sensor.

SERVICING AIR CONDITIONER

The air conditioner system in your NISSAN vehicle is charged with a refrigerant designed with the environment in mind.

This refrigerant does not harm the earth's ozone layer.

Special charging equipment and lubricant is required when servicing your NISSAN air conditioner. Using improper refrigerants or lubricants will cause severe damage to your air conditioner system. For additional information, refer to "Air conditioner system refrigerant and oil recommendations" in the "Technical and consumer information" section of this manual.

A NISSAN dealer is able to service your "environmentally friendly" air conditioning system.

⚠ WARNING

The air conditioner system contains refrigerant under high pressure. To avoid personal injury, any air conditioner service should be done only by an experienced technician with proper equipment.

AUDIO SYSTEM

RADIO

Place the ignition switch in the ACC or ON position and press the VOL (volume)/ON·OFF (power) knob to turn the radio on. If you listen to the radio with the engine not running, the ignition switch should be placed in the ACC position.

Radio reception is affected by station signal strength, distance from radio transmitter, buildings, bridges, mountains and other external influences. Intermittent changes in reception quality normally are caused by these external influences.

Using a cellular phone in or near the vehicle may influence radio reception quality.

Radio reception

Your NISSAN radio system is equipped with state-of-the-art electronic circuits to enhance radio reception. These circuits are designed to extend reception range, and to enhance the quality of that reception.

However, there are some general characteristics of both FM and AM radio signals that can affect radio reception quality in a moving vehicle, even when the finest equipment is used. These characteristics are completely normal in a given reception area and do not indicate any malfunction in your NISSAN radio system.

Reception conditions will constantly change because of vehicle movement. Buildings, terrain, signal distance and interference from other vehicles can work against ideal reception. Described below are some of the factors that can affect your radio reception.

Some cellular phones or other devices may cause interference or a buzzing noise to come from the audio system speakers. Storing the device in a different location may reduce or eliminate the noise.

FM RADIO RECEPTION

Range: FM range is normally limited to 25 – 30 mi (40 – 48 km), with monaural (single channel) FM having slightly more range than stereo FM. External influences may sometimes interfere with FM station reception even if the FM station is within 25 mi (40 km). The strength of the FM signal is directly related to the distance between the transmitter and receiver. FM signals follow a line-of-sight path, exhibiting many of the same characteristics as light. For example, they will reflect off objects.

Fade and drift: As your vehicle moves away from a station transmitter, the signals will tend to fade and/or drift.eb

Static and flutter: During signal interference from buildings, large hills or due to antenna position

(usually in conjunction with increased distance from the station transmitter), static or flutter can be heard. This can be reduced by adjusting the treble control to reduce treble response.

Multipath reception: Because of the reflective characteristics of FM signals, direct and reflected signals reach the receiver at the same time. The signals may cancel each other, resulting in momentary flutter or loss of sound.

AM RADIO RECEPTION

AM signals, because of their low frequency, can bend around objects and skip along the ground. In addition, the signals can be bounced off the ionosphere and bent back to earth. Because of these characteristics, AM signals are also subject to interference as they travel from transmitter to receiver.

Fading: Occurs while the vehicle is passing through freeway underpasses or in areas with many tall buildings. It can also occur for several seconds during ionospheric turbulence even in areas where no obstacles exist.

Static: Caused by thunderstorms, electrical power lines, electric signs and even traffic lights.

SATELLITE RADIO RECEPTION (if so equipped)

When the satellite radio is used for the first time or the battery has been replaced, the satellite radio may not work properly. This is not a malfunction. Wait more than 10 minutes with satellite radio ON and the vehicle outside of any metal or large building for satellite radio to receive all of the necessary data.

The satellite radio mode will be skipped unless an optional satellite receiver and antenna are installed and a SiriusXM® Satellite Radio service subscription is active. Satellite radio is not available in Alaska, Hawaii and Guam.

Satellite radio performance may be affected if cargo carried on the roof blocks the satellite radio signal.

If possible, do not put cargo over the satellite antenna.

A build up of ice on the satellite radio antenna can affect satellite radio performance. Remove the ice to restore satellite radio reception.

XM® is a registered trademark of SiriusXM® Satellite Radio, Inc.

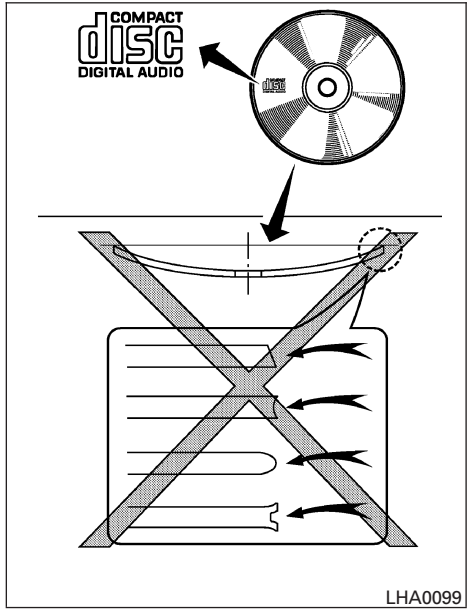

AUDIO OPERATION PRECAUTIONS

Compact disc (CD) player (models without Navigation System)

⚠ CAUTION

- **Do not force a compact disc into the CD insert slot. This could damage the CD and/or CD changer/player.**
- **Trying to load a CD with the CD door closed could damage the CD and/or CD changer.**
- **Only one CD can be loaded into the CD player at a time.**

- **Only use high quality 4.7 in (12 cm) round discs that have the "COMPACT disc DIGITAL AUDIO" logo on the disc or packaging.**
- **During cold weather or rainy days, the player may malfunction due to the humidity. If this occurs, remove the CD and dehumidify or ventilate the player completely.**
- **The player may skip while driving on rough roads.**
- **The CD player sometimes cannot function when the compartment temperature is extremely high or low. Decrease/increase the temperature before use.**
- **Do not expose the CD to direct sunlight.**
- **CDs that are in poor condition or are dirty, scratched or covered with fingerprints may not work properly.**
- **The following CDs may not work properly:**
  - **Copy control compact discs (CCCD)**
  - **Recordable compact discs (CD-R)**
  - **Rewritable compact discs (CD-RW)**
- **Do not use the following CDs as they may cause the CD player to malfunction:**
  - **3.1 in (8 cm) discs with an adapter**
  - **CDs that are not round**
  - **CDs with a paper label**
  - **CDs that are warped, scratched, or have abnormal edges**
- **This audio system can only play prerecorded CDs. It has no capability to record or burn CDs.**
- **If the CD cannot be played, one of the following messages will be displayed.**

  CHECK DISC:

  - **Confirm that the CD is inserted correctly (the label side is facing up, etc.).**
  - **Confirm that the CD is not bent or warped and it is free of scratches.**

  PRESS EJECT:

  This is an error due to excessive temperature inside the player. Remove the CD by pressing the EJECT button. After a short time, reinsert the CD. The CD can be played when the temperature of the player returns to normal.

  UNPLAYABLE:

  The file is unplayable in this audio system (only MP3 or WMA (if so equipped) CD).

CD/DVD combination player (models with Navigation System)

- **Do not force a disc into the CD/DVD insert slot. This could damage the CD/DVD player.**
- **During cold weather or rainy days, the player may malfunction due to the humidity. If this occurs, remove the CD/DVD and dehumidify or ventilate the player completely.**
- **The player may skip while driving on rough roads.**
- **The CD/DVD player sometimes cannot function when the passenger compartment temperature is extremely high. Decrease the temperature before use.**
- **Only use high quality 4.7 in (12 cm) round discs that have the "COMPACT disc DIGITAL AUDIO" or "DVD Video" logo on the disc or packaging.**
- **Do not expose the CD/DVD to direct sunlight.**
- **CDs/DVDs that are of poor quality, dirty, scratched, covered with fingerprints, or that have pinholes may not work properly.**
- **The following CDs/DVDs are not guaranteed to play:**
  - **Copy control compact discs (CCCD)**
  - **Recordable compact discs (CD-R)**
  - **Rewritable compact discs (CD-RW)**
  - **Recordable compact discs (DVD±R, DVD±R DL)**
  - **Rewritable compact discs (DVD±RW, DVD±RW DL)**
- **Do not use the following CDs/DVDs as they may cause the CD/DVD player to malfunction.**
  - **3.1 in (8 cm) discs**
  - **CDs/DVDs that are not round**
  - **CDs/DVDs with a paper label**
  - **CDs/DVDs that are warped, scratched, or have abnormal edges**
  - **This audio system can only play prerecorded CDs/DVDs. It has no capabilities to record or burn CDs/DVDs.**
- **If the CD/DVD cannot be played, one of the following messages will be displayed.**

Disc Read Error:

- **Confirm that the CD/DVD is inserted correctly (the label side is facing up, etc.).**
- **Confirm that the CD/DVD is not bent or warped and it is free of scratches.**

Please Eject Disc:

This error may be due to the temperature inside the player getting too high. Remove the CD/DVD by pushing the EJECT button, and after a short time reinsert the CD/DVD. The CD/DVD can be played when the temperature of the player returns to normal. If the error persists, consult your local retailer.

Unplayable File:

- **The file may be copy protected.**
- **The file is not MP3, WMA, AAC, M4A or DIVX type.**

Region Invalid

- **The DVD is not for region 1 or all regions.**

- **Use DVDs with a region code “1”, “ALL” or “1 included” for your DVD entertainment system. (The region code Ⓐ is displayed as a small symbol printed on the top of the DVD Ⓑ.) This vehicle-installed DVD player cannot play DVDs with a region code other than “1” or “ALL”.**

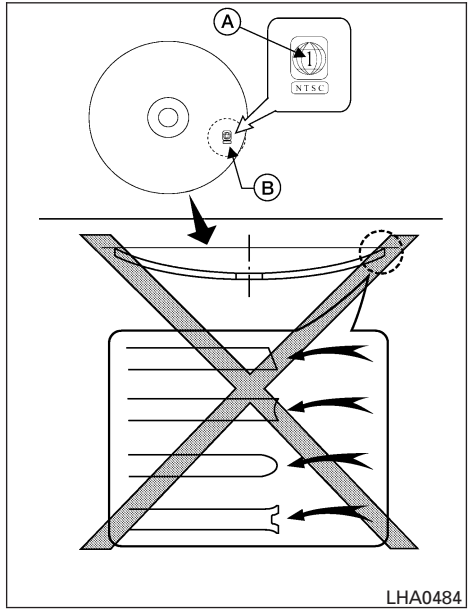

Copyright and trademark

- **The technology protected by the U.S. patent and other intellectual property rights owned by Macrovision Corporation and other right holders is adopted for this system.**
- **This copyright protected technology cannot be used without a permit from Macrovision Corporation. It is limited to personal use, etc., as long as the permit from Macrovision Corporation is not issued.**
- **Modifying or disassembling is prohibited.**
- **Dolby digital is manufactured under license from Dolby Laboratories, Inc.**
- **Dolby and the double D mark “ ” are trademarks of Dolby Laboratories, Inc.**
- **DTS and DTS Digital Surround “ ” are registered trademarks of Digital Theater Systems, Inc.**

USB (Universal Serial Bus) Connection Port

⚠ WARNING

Do not connect, disconnect, or operate the USB device while driving. Doing so can be a distraction. If distracted you could lose control of your vehicle and cause an accident or serious injury.

⚠ CAUTION

- **Do not force the USB device into the USB port. Inserting the USB device tilted or up-side-down into the port may damage the port. Make sure that the USB device is connected correctly into the USB port.**
- **Do not grab the USB port cover (if so equipped) when pulling the USB device out of the port. This could damage the port and the cover.**
- **Do not leave the USB cable in a place where it can be pulled unintentionally. Pulling the cable may damage the port.**

The vehicle is not equipped with a USB device. USB devices should be purchased separately as necessary.

This system cannot be used to format USB devices. To format a USB device, use a personal computer.

In some states/area, the USB device for the front seats plays only sound without images for regulatory reasons, even when the vehicle is parked.

This system supports various USB memory devices, USB hard drives and iPod® players. Some USB devices may not be supported by this system.

- Partitioned USB devices may not play correctly.
- Some characters used in other languages (Chinese, Japanese, etc.) may not appear properly in the display. Using English language characters with a USB device is recommended.

General notes for USB use

- Refer to your device manufacturer's owner information regarding the proper use and care of the device.

Notes for iPod® use

iPod® is a trademark of Apple Inc., registered in the U.S. and other countries.

- Improperly plugging in the iPod® may cause a check mark to be displayed on and off (flickering). Always make sure that the iPod® is connected properly.
- An iPod® nano (1st Generation) may remain in fast forward or rewind mode if it is connected during a seek operation. In this case, please manually reset the iPod®.
- An iPod® nano (2nd Generation) will continue to fast-forward or rewind if it is disconnected during a seek operation.
- An incorrect song title may appear when the Play Mode is changed while using an iPod® nano (2nd Generation).
- Audiobooks may not play in the same order as they appear on an iPod®.
- Large video files cause slow responses in an iPod®. The vehicle center display may momentarily black out, but will soon recover.
- If an iPod® automatically selects large video files while in the shuffle mode, the vehicle center display may momentarily black out, but will soon recover.

Bluetooth® streaming audio (if so equipped)

- Some Bluetooth® audio devices may not be recognized by the in-vehicle audio system.
- It is necessary to set up the wireless connection between a compatible Bluetooth® audio device and the in-vehicle Bluetooth® module before using the Bluetooth® audio.
- Operating procedure of the Bluetooth® audio will vary depending on the devices. Make sure how to operate your audio device before using it with this system.

- The Bluetooth® audio may be stopped under the following conditions:
  - Receiving a call on the Hands-Free Phone System.
  - Checking the connection to the hands-free phone.
- Do not place the Bluetooth® audio device in an area surrounded by metal or far away from the in-vehicle Bluetooth® module to prevent tone quality degradation and wireless connection disruption.
- While an audio device is connected through the Bluetooth® wireless connection, the battery power of the device may discharge quicker than usual.
- This system supports the Bluetooth® Audio Distribution Profile (A2DP, AVRCP).

Bluetooth®

BLUETOOTH® is a trademark owned by Bluetooth SIG, Inc. and licensed to Clarion Co., Ltd.

CD or USB with Compressed Audio Files (models without Navigation System)

The file types supported by this system are MP3 and WMA.

Explanation of terms

- MP3 — MP3 is short for Moving Pictures Experts Group Audio Layer 3. MP3 is the most well-known compressed digital audio file format. This format allows for near “CD quality” sound, but at a fraction of the size of normal audio files. MP3 conversion of an audio track from CD-ROM can reduce the file size by approximately a 10:1 ratio with virtually no perceptible loss in quality. MP3 compression removes the redundant and irrelevant parts of a sound signal that the human ear doesn’t hear.
- WMA — Windows Media Audio (WMA)* is a compressed audio format created by Microsoft as an alternative to MP3. The WMA codec offers greater file compression than the MP3 codec, enabling storage of more digital audio tracks in the same amount of space when compared to MP3s at the same level of quality.
- Bit rate — Bit rate denotes the number of bits per second used by a digital music file. The size and quality of a compressed digital audio file is determined by the bit rate used when encoding the file.
- Sampling frequency — Sampling frequency is the rate at which the samples of a signal are converted from analog to digital (A/D conversion) per second.
- Multisession — Multisession is one of the methods for writing data to media. Writing data once to the media is called a single session, and writing more than once is called a multisession.
- ID3/WMA Tag — The ID3/WMA tag is the part of the encoded MP3 or WMA file that contains information about the digital music file such as song title, artist, encoding bit rate, track time duration, etc. ID3 tag information is displayed on the Artist/song title line on the display.

* Windows®, Windows Media® and Windows Vista® are registered trademarks and trademarks in the United States of America and other countries of Microsoft Corporation of the USA.

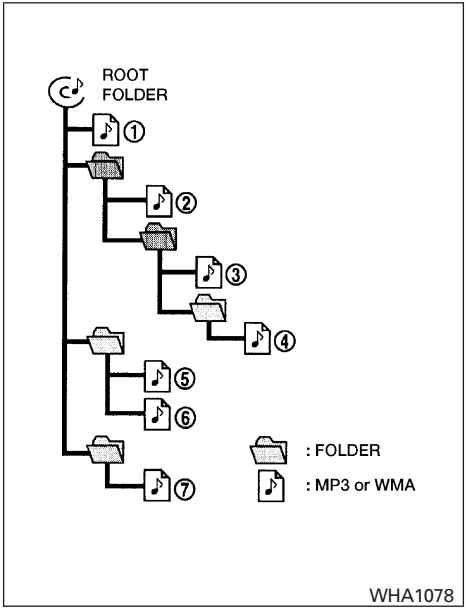

Playback order chart

Playback order

Music playback order of a CD with MP3 or WMA files is as illustrated.

- The names of folders not containing MP3 or WMA files are not shown in the display.
- If there is a file in the top level of the disc, “Root Folder” is displayed.
- The playback order is the order in which the files were written by the writing software. Therefore, the files might not play in the desired order.

Specification chart

Supported media			CD, CD-R, CD-RW, USB 2.0
Supported file systems			CD, CD-R, CD-RW, ISO9660 LEVEL1, ISO9660 LEVEL2, Romeo, Joliet * ISO9660 Level 3 (packet writing) is not supported. * Files saved using the Live File System component (on a Windows Vista® operating system-based computer) are not supported.
			UDF Bridge (UDF 1.02 + ISO9660), UDF 1.5, UDF 2.0 VDF 1.5/VDF 2.0 (packet writing) is not supported.
			USB memory: FAT16, FAT32
Supported versions	MP3	Version	MPEG1, MPEG2, MPEG2.5
		Sampling frequency	8 kHz - 48 kHz
		Bit rate	8 kbps - 320 kbps, VBR*2
	WMA*1	Version	WMA7, WMA8
		Sampling frequency	8 kHz - 48 kHz
		Bit rate	8 kbps - 320 kbps, VBR*2
Tag information (Song title and artist name)			ID3 tag VER1.0, VER1.1, VER2.2, VER2.3, VER 2.4 (MP3 only)
			WMA tag (WMA only)
Folder levels			Folder levels: 8, Folders: 255 (including root folder), Files: 512 (Max. 255 files for one folder)
Text character number limitation			64 characters
Displayable character codes*3			01: ASCII, 02: ISO-8859-1, 03: UNICODE (UTF-16 LE), 04: UNICODE (UTF-16 BE), 05: UNICODE (UTF-8)

*1 Protected WMA files (DRM) cannot be played.

*2 When VBR files are played, the playback time may not be displayed correctly.

*3 Available codes depend on what kind of media, versions and information are going to be displayed.

Troubleshooting guide

Symptom	Cause and Countermeasure
Cannot play	Check if the CD/USB device is inserted correctly.
	Check if the CD is scratched or dirty.
	Check if there is condensation inside the player. If there is, wait until the condensation is gone (about 1 hour) before using the player.
	If there is a temperature increase error, the player will play correctly after it returns to the normal temperature.
	If there is a mixture of music CD files (CD-DA data) and compressed audio files on a CD, only the music CD files (CD-DA data) will be played.
	Files with extensions other than “.MP3” or “.WMA” cannot be played. In addition, the character codes and number of characters for folder names and file names should be in compliance with the specifications.
	Check if the disc or file is generated in an irregular format. This may occur depending on the variation or the setting of the compressed audio file writing application or other text editing applications.
	Check if the finalization process, such as session close and disc close, is done for the disc.
	Check if the CD/USB device is protected by copyright.
Poor sound quality	Check if the CD is scratched or dirty.
It takes a relatively long time before the music starts playing.	If there are many folders or file levels on the CD/USB device, or if it is a multisession disc, some time may be required before the music starts playing.
Music cuts off or skips	The writing software and hardware combination might not match, or the writing speed, writing depth, writing width, etc., might not match the specifications. Try using the slowest writing speed.
Skipping with high bit rate files	Skipping may occur with large quantities of data, such as for high bit rate data.
Moves immediately to the next song when playing	If an unsupported compressed audio file has been given a supported extension like “.MP3”, or when play is prohibited by copyright protection, the player will skip to the next song.
Songs do not play back in the desired order	The playback order is the order in which the files were written by the writing software. Therefore, the files might not play in the desired order.
	Random/Shuffle may be active on the audio system or on the USB device.

CD, DVD or USB with Compressed Audio Files (models with Navigation System)

The file types supported by this system are MP3, WMA, AAC/M4A and ATRAC3.

Explanation of terms

- MP3 — MP3 is short for Moving Pictures Experts Group Audio Layer 3. MP3 is the most well known compressed digital audio file format. This format allows for near "CD quality" sound, but at a fraction of the size of normal audio files. MP3 conversion of an audio track can reduce the file size by approximately 10:1 ratio (Sampling: 44.1 kHz, Bit rate: 128 kbps) with virtually no perceptible loss in quality. The compression reduces certain parts of sound that seem inaudible to most people.
- WMA — Windows Media Audio (WMA) is a compressed audio format created by Microsoft as an alternative to MP3. The WMA codec offers greater file compression than the MP3 codec, enabling storage of more digital audio tracks in the same amount of space when compared to MP3s at the same level of quality.
- AAC/M4A — Advanced Audio Coding (AAC) is a lossy audio compression format. Audio files that have been encoded with AAC are generally smaller in size and deliver a higher quality of sound than MP3.
- ATRAC3, ATRAC3 Plus — Adaptive Transform Acoustic Coding (ATRAC) is a lossy audio compression format developed by Sony.
- Bit rate — Bit rate denotes the number of bits per second used by a digital music file. The size and quality of a compressed digital audio file is determined by the bit rate used when encoding the file.
- Sampling frequency — Sampling frequency is the rate at which the samples of a signal are converted from analog to digital (A/D conversion) per second.
- Multisession — Multisession is one of the methods for writing data to media. Writing data once to the media is called a single session, and writing more than once is called a multisession.
- ID3/WMA Tag — The ID3/WMA tag is the part of the encoded MP3 or WMA file that contains information about the digital music file such as song title, artist, album title, encoding bit rate, track time duration, etc. ID3 tag information is displayed on the Album/Artist/Track title line on the display.

* Windows®, Windows Media® and Windows Vista® are registered trademarks or trademarks of Microsoft Corporation in the United States of America and/or other countries.

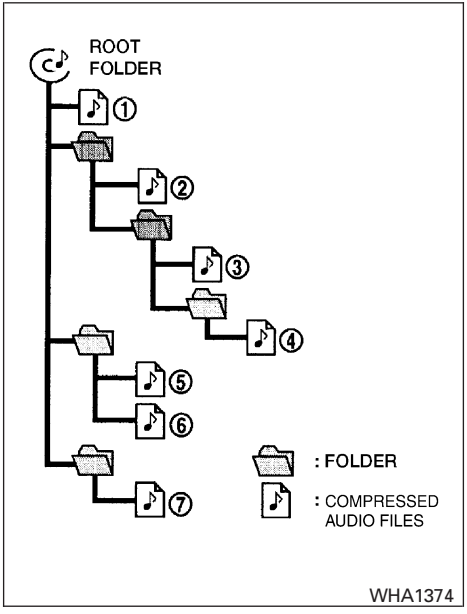

Playback order chart

Playback order

Music playback order of a CD, DVD or USB device with compressed audio files is as illustrated.

- The folder names of folders not containing compressed audio files are not shown in the display.
- If there is a file in the top level of the disc/USB, “Root Folder” is displayed.
- The playback order is the order in which the files were written by the writing software, so the files might not play in the desired order.

Specification chart

Supported media			CD, CD-R, CD-RW, DVD-ROM, DVD±R, DVD±RW, DVD±R DL, USB 2.0
Supported file systems			CD, CD-R, CD-RW, DVD-ROM, DVD±R, DVD±RW, DVD±R DL, ISO9660 LEVEL1, ISO9660 LEVEL2, Romeo, Joliet * ISO9660 Level 3 (packet writing) is not supported. * Files saved using the Live File System component (on a Windows Vista® operating system-based computer) are not supported.
			UDF Bridge (UDF 1.02 + ISO9660), UDF 1.5, UDF 2.0 * VDF 1.5/VDF 2.0 (packet writing) is not supported.
			USB memory: FAT16, FAT32
Supported versions*1	MP3	Version	MPEG1, MPEG2, MPEG2.5
		Sampling frequency	8 kHz - 48 kHz
		Bit rate	8 kbps - 320 kbps, VBR*4
	WMA*2	Version	WMA7, WMA8, WMA9
		Sampling frequency	32 kHz - 48 kHz
		Bit rate	32 kbps - 192 kbps, VBR*4
	AAC	Sampling frequency	8 kHz - 96 kHz
		Bit rate	16 kbps - 320 kbps, VBR*4
	ATRAC	Version	ATRAC3, ATRAC3 Plus
Tag information (Song title and artist name)			ID3 tag VER1.0, VER1.1, VER2.2, VER2.3, VER 2.4 (MP3 only)
			WMA tag (WMA only)
Folder levels			Folder levels: 8, Folders: 255 (including root folder), Files: 512 (Max. 255 files for one folder)
Text character number limitation			128 characters
Displayable character codes*3			01: ASCII, 02: ISO-8859-1, 03: UNICODE (UTF-16 BOM Big Endian), 04: UNICODE (UTF-16 Non-BOM Big Endian), 05: UNICODE (UTF-8), 06: UNICODE (Non-UTF 16 BOM Little Endian), 07: SHIFT-JIS

*1 Files created with a combination of 48 kHz sampling frequency and 64 kbps bit rate cannot be played.

*2 Protected WMA files (DRM) cannot be played.

*3 Available codes depend on what kind of media, versions and information are going to be displayed.

*4 When VBR files are played, the playback time may not be displayed correctly.

Troubleshooting guide

Symptom	Cause and Countermeasure
Cannot play	Check if the CD/DVD/USB device was inserted correctly.
	Check if the CD/DVD is scratched or dirty.
	Check if there is condensation inside the player. If there is, wait until the condensation is gone (about 1 hour) before using the player.
	If there is a temperature increase error, the player will play correctly after it returns to the normal temperature.
	If there is a mixture of music CD files (CD-DA data) and compressed audio files on a CD, only the music CD files (CD-DA data) will be played.
	Files with extensions other than “.MP3”, “.WMA”, “.AAC”, “.M4A” or “.AA3” cannot be played. In addition, the character codes and number of characters for folder names and file names should be in compliance with the specifications.
	Check if the disc or file is generated in an irregular format. This may occur depending on the variation or the setting of the compressed audio file writing application or other text editing applications.
	Check if the finalization process, such as session close and disc close, is done for the disc.
	Check if the CD/DVD/USB device is protected by copyright.
Poor sound quality	Check if the CD/DVD is scratched or dirty.
It takes a relatively long time before the music starts playing.	If there are many folders or file levels on the CD/DVD/USB device, or if it is a multisession disc, some time may be required before the music starts playing.
Music cuts off or skips	The writing software and hardware combination might not match, or the writing speed, writing depth, writing width, etc., might not match the specifications. Try using the slowest writing speed.
Skipping with high bit rate files	Skipping may occur with large quantities of data, such as for high bit rate data.
Moves immediately to the next song when playing	If an unsupported compressed audio file has been given a supported extension like “.MP3”, or when play is prohibited by copyright protection, the player will skip to the next song.
Songs do not play back in the desired order	The playback order is the order in which the files were written by the writing software. Therefore, the files might not play in the desired order.
	Random/Shuffle may be active on the audio system or on the USB device.

Compressed Video Files (models with Navigation System)

Explanation of terms

- DivX – DivX refers to the DivX® codec owned by Div, Inc. used for a lossy compression of video based on MPEG-4.
- AVI – AVI stands for Audio Video Interleave. It is standard file format originated by Microsoft Corporation. A .divx encoded file can be saved into the .avi file format for playback on this system if it meets the requirements stated in the table in this section. However, all .avi files are not playable on this system since different encodings can be used other than the DivX® codec.
- ASF – ASF stands for Advanced Systems Format. It is a file format owned by Microsoft Corporation. Note: Only .asf files that meet the requirements stated in the table in this section can be played.
- Bit rate — Bit rate denotes the number of bits per second used by a digital video files. The size and quality of a compressed digital audio file is determined by the bit rate used when encoding the file.

Requirements for Supporting Video Playback

Media	CD, CD-R, CD-RW, DVD, DVD±R, DVD±RW, DVD±RW DL, USB 2.0 Memory		
File Systems	CD, CD-R, CD-RW, DVD, DVD±R, DVD±RW, DVD±RW DL	ISO9660 LEVEL1, ISO9660 LEVEL2, Romeo, Joliet, UDF Bridge (UDF1.02+ISO9660), UDF1.5, UDF2.0 * ISO9660 Level 3 (packet writing) is not supported. * Files saved using the Live File System component (on a Windows Vista-based computer) are not supported. * VDF1.5/VDF2.0 (packet writing) is not supported.	
	USB Memory	FAT16, FAT32	
File Types	.divx, .avi	Video Codecs	DivX3, DivX4, DivX5, DivX6
		Audio Codecs	MP3, MPEG2.5 Audio Layer3, AC3, LPCM
	.asf	Video Codec	ISO-MPEG4
		Audio Codec	G.726
Bit Rates	.divx, .avi	Maximum Average	4 Mbps
		Maximum Peak	8 Mbps
Resolution	.divx, .avi	Minimum	32 x 32
		Maximum	720 x 480
	.asf	Minimum	32 x 32
		Maximum	720 x 576

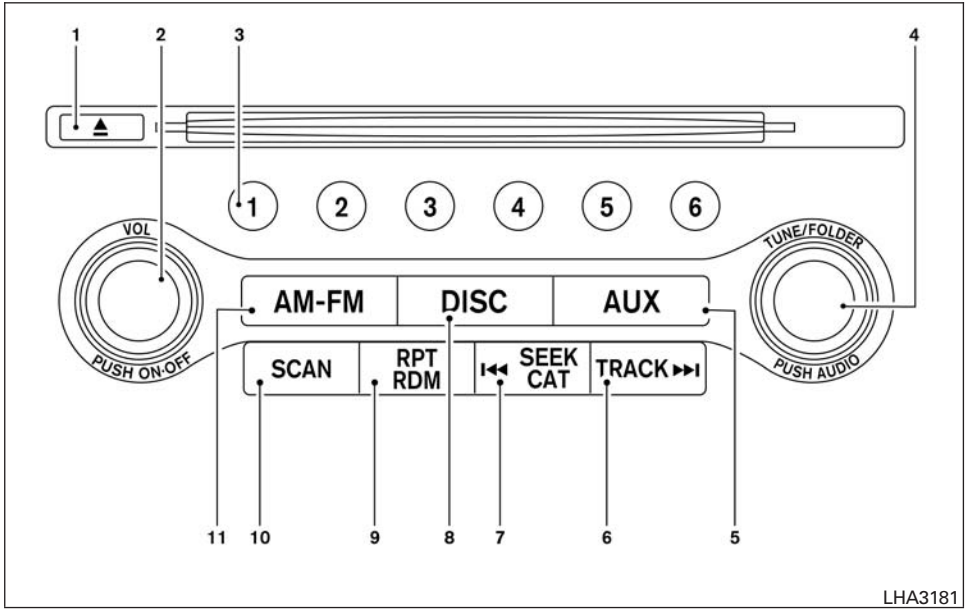

FM/AM/SAT RADIO WITH COMPACT DISC (CD) PLAYER (if so equipped)

1. ⏏ CD eject button
2. ON-OFF control knob/VOL (volume) control knob
3. Station select (1–6) buttons
4. AUDIO button/TUNE/FOLDER control knob
5. AUX button*
6. ⏭ TRACK button
7. ⏮ SEEK/CAT button
8. DISC button
9. RPT (repeat)/RDM (random) button
10. SCAN button
11. AM-FM button

*No satellite radio reception is available when the AUX button is pressed to access satellite radio stations unless optional satellite receiver and antenna are installed and a SiriusXM® Satellite Radio service subscription is active. Satellite radio is not available in Alaska, Hawaii and Guam.

For all operation precautions, refer to "Audio operation precautions" in this section.

Audio main operation

VOL/ON·OFF control

Place the ignition switch in the ACC or ON position and push the VOL/ON·OFF control knob while the system is off to call up the mode that was playing immediately before the system was turned off.

To turn the system off, press the VOL/ON·OFF control knob.

Turn the VOL/ON·OFF control knob to adjust the volume.

This vehicle has Speed Sensitive Volume (SSV) for audio. The audio volume changes as the driving speed changes.

Audio settings

Audio		
	Bass	Adjusts the bass to the desired level.
	Treble	Adjusts the treble to the desired level.
	Balance	Adjusts the balance to the desired level. Balance adjusts the sound level between the left and right speakers.
	Fade	Adjusts the fade to the desired level. Fade adjusts the sound level between the front and rear speakers.
	Speed Sensitive Vol.	Adjusts the speed sensitive volume function, which increases the volume of the audio system as the speed of the vehicle increases. Set to "OFF" to disable the feature. The higher the setting, the more the volume increases in relation to vehicle speed.

Bass, treble, balance and fade can also be adjusted by pressing the AUDIO control knob and turning it to select the item to adjust. When the desired item is shown on the display, turn the tuning to adjust and then press the AUDIO button until the display returns to the main audio screen. If the button is not pressed for approximately 10 seconds, the radio or CD display will automatically reappear.

Clock operation

For additional information on setting the clock, refer to “How to use the setting button” in this section.

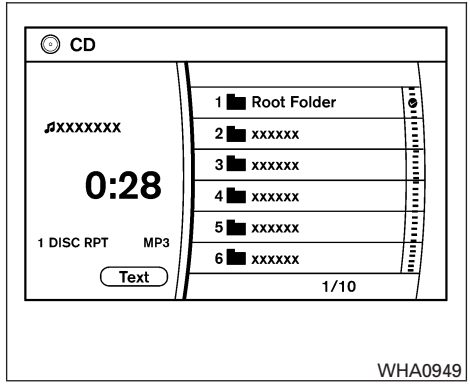

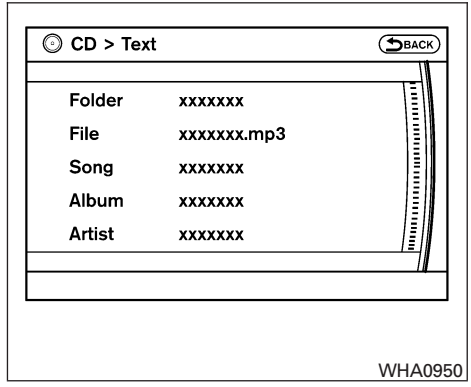

CD/MP3 display mode

While listening to a CD or an MP3/WMA CD, certain text might be able to be displayed (when CD encoded with text is being used).

Depending on how the CD or MP3/WMA CD is encoded, the following text might be able to be displayed by selecting the “Text” key:

- Folder displays the name of the current folder being accessed.
- File displays the name of the file currently playing.
- Song displays the ID3 encoded tag of the song name.
- Album displays the ID3 encoded tag of the album name.
- Artist displays the ID3 encoded tag of the artist’s name.
- Disc displays the disc name of the CD currently playing.
- Track displays the name of the song on the CD currently playing.

Some of this text or modes might not display while playing a regular CD. Select the “Menu” key with the NISSAN controller, then select the “Text” key to display the text for the CD.

Press the BACK button to exit the CD text display screen.

FM/AM/SAT radio operation

FM/AM band select

Pressing the FM·AM button will change the band as follows:

AM → FM1 → FM2 → AM

When the FM·AM button is pressed while the ignition switch is in the ACC or ON position, the radio will come on at the station last played.

The last station played will also come on when the VOL/ON·OFF control knob is pressed ON.

If a compact disc is playing when the FM·AM button is pressed, the compact disc will automatically be turned off and the last radio station played will come on.

The FM stereo indicator (STEREO) will illuminate during FM stereo reception. When the stereo broadcast signal is weak, the radio will automatically change from stereo to monaural reception.

XM band select

Pressing the AUX button will change the band as follows:

USB → XM1* → XM2* → XM3* → AUX → USB

When the AUX button is pressed while the ignition switch is in the ACC or ON position, the radio will come on at the station last played.

The last station played will also come on when the VOL/ON·OFF control knob is pressed ON.

*When the AUX button is pressed, the satellite radio mode will be skipped unless an optional satellite receiver and antenna are installed and a SiriusXM® Satellite Radio service subscription is active. Satellite radio is not available in Alaska, Hawaii and Guam.

If a compact disc is playing when the AUX button is pressed, the compact disc will automatically be turned off and the last radio station played will come on.

TUNE/FOLDER (Tuning) knob

To manually tune the radio, turn the TUNE/FOLDER knob to the right or left.

SEEK/CAT and TRACK tuning buttons

Press the SEEK/CAT button or the TRACK button to tune from high to low or low to high frequencies and stop at the next broadcasting station.

SCAN tuning

Press the SCAN button to stop at each broadcasting station for 5 seconds. Pressing the SCAN button again during this 5 second period will stop scan tuning and the radio will remain tuned to that station. If the SCAN button is not pressed within 5 seconds, scan tuning moves to the next station.

1 to 6 Station memory operations

Six stations can be set for the AM band. Twelve stations can be set for the FM band (6 for FM1, 6 for FM2). Eighteen stations can be set for the XM band (6 for XM1, 6 for XM2, 6 for XM3).

1. Choose the radio band AM, FM1 or FM2 using the FM·AM select button or choose the satellite band SAT1 or SAT2 using the AUX button.
2. Tune to the desired station using manual, SEEK or SCAN tuning. Press and hold any of the desired station memory buttons (1 – 6) until a beep sound is heard.
3. The channel indicator will then come on and the sound will resume. Programming is now complete.
4. Other buttons can be set in the same manner.

If the battery cable is disconnected, or if the fuse opens, the radio memory will be canceled. In that case, reset the desired stations.

Radio data system (RDS)

RDS stands for Radio Data System, and is a data information service transmitted by some radio stations on the FM band (not AM band). Currently, most RDS stations are in large cities, but many stations are now considering broadcasting RDS data.

RDS can display:

- Station call sign, such as “WHFR 98.3”.
- Station name, such as “The Groove”.
- Music or programming type such as “Classical”, “Country”, or “Rock”.

When the “Text” key is selected with the NISSAN controller on the display while the radio is playing, additional information is displayed on the screen.

If the station broadcasts RDS information, the RDS icon is displayed.

Compact disc (CD) player operation

Place the ignition in the ACC or ON position and insert the compact disc into the slot with the label side facing up. The compact disc will be guided automatically into the slot and start playing.

If the radio is already operating, it will automatically turn off and the compact disc will play.

If the system has been turned off while the compact disc was playing, pressing the VOL/ON·OFF control knob will start the compact disc.

DISC button

When the DISC button is pressed with the system off and a compact disc loaded, the system will turn on and the compact disc will start to play.

When the DISC button is pressed with a compact disc loaded with the radio playing, the radio will automatically be turned off and the compact disc will start to play.

SEEK/CAT and TRACK buttons

When the SEEK/CAT button is pressed while a compact disc is playing, the track being played returns to its beginning. Press several times to skip back through tracks. The compact disc will go back the number of times the button is pressed.

When the TRACK button is pressed while a compact disc is playing, the next track will start to play from its beginning. Press several times to skip through tracks. The compact disc will advance the number of times the button is pressed. (When the last track on the compact disc is skipped through, the first track will be played.)

The NISSAN controller can also be used to select tracks when a CD is playing.

SEEK/CAT and TRACK (Rewind and Fast Forward) buttons

Press and hold the SEEK/CAT (rewind) button or the TRACK (fast forward) button while a compact disc is playing; the compact disc will play while rewinding or fast forwarding. When the button is released, the compact disc will return to normal play speed.

TUNE/FOLDER knob

While playing an MP3/WMA CD, turn the TUNE/FOLDER knob right or left to scan forward or backward through available folders.

RPT (repeat)/RDM (random) button

When the RPT/RDM button is pressed while the compact disc is playing, the play pattern can be changed as follows:

CD

Repeat All → 1 Track Repeat → 1 Disc Random → Repeat All

CD with compressed audio files

Repeat All → 1 Folder Repeat → 1 Track Repeat → 1 Disc Random → 1 Folder Random → Repeat All

Repeat All: Normal play mode. All tracks will constantly play in sequential order.
1 Folder Repeat: The folder that is currently being accessed will be repeated.
1 Track Repeat: The track that is currently playing will be repeated.
1 Disc Random: The tracks on the disc that is currently playing will be played in a mixed order.
1 Folder Random: The tracks in the folder that is currently playing will be played in a mixed order.

CD EJECT button

When the ⏏ button is pressed with the compact disc loaded, the compact disc will be ejected.

When the ⏏ button is pressed while the compact disc is being played, the compact disc will eject and the system will turn off.

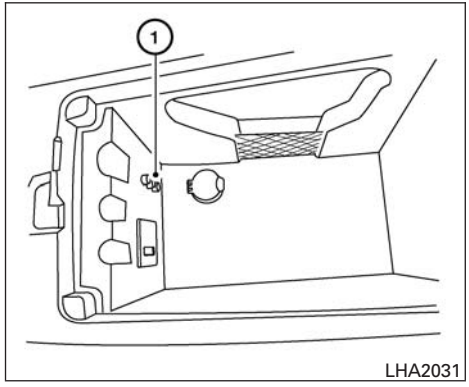

AUX (auxiliary) input jacks

The auxiliary input jacks are located inside the center console ①. NTSC compatible devices such as video games, camcorders and portable video players can be connected to the auxiliary input jacks. Audio devices, such as some MP3 players, can also be connected to the system through the auxiliary input jacks.

The auxiliary input jacks are color coded for identification purposes:

- Red – right channel audio input
- White – left channel audio input
- Yellow – video input

Before connecting a device to the auxiliary input jacks, turn off the power of the portable device.

With a compatible device connected to the auxiliary input jacks, press the AUX button until the AUX mode appears in the display. The output from the device will be played through the display (when the vehicle is in the (P) Park position and the parking brake engaged) and audio system.

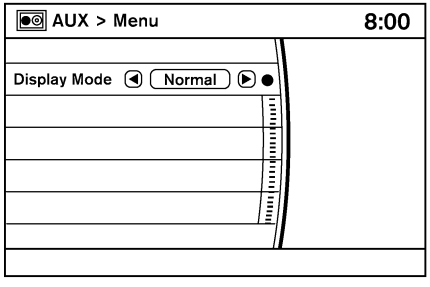

LHA1367

AUX settings

Select the “Settings” key using the NISSAN controller and press the ENTER button.

Choose one of the display modes by selecting the “ ◀ ” key or the “ ▶ ” key:

- Normal
- Wide
- Cinema

Additional features

For additional information about the iPod® player available with this system, refer to “iPod® player operation without Navigation System” in this section.

For additional information about the USB (Universal Serial Bus) connection port available with this system, refer to “USB (Universal Serial Bus) Connection Port (models with Navigation System)” in this section.

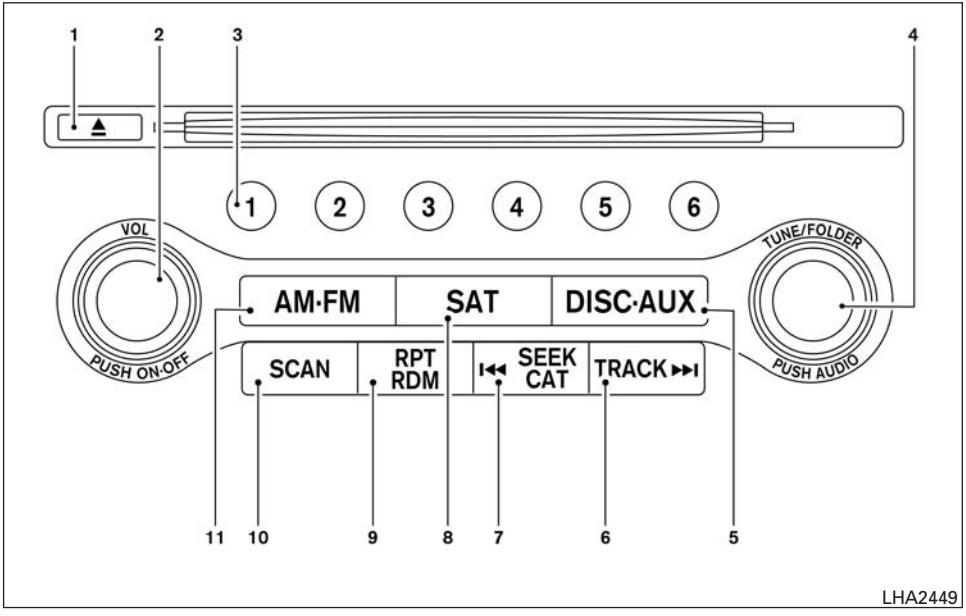

FM/AM/SAT RADIO WITH CD/DVD PLAYER (if so equipped)

1. ⏏ CD eject button
2. PUSH ON·OFF button/VOL (volume) control knob
3. Station select (1 - 6) buttons
4. AUDIO button/TUNE/FOLDER control knob
5. DISC·AUX button
6. ⏭ TRACK button
7. ⏮ SEEK/CAT button
8. SAT* button
9. RPT (repeat)/RDM (random) button
10. SCAN button
11. AM·FM button

*No satellite radio reception is available when the SAT button is pressed to access satellite radio stations unless optional satellite receiver and antenna are installed and a SiriusXM® Satellite Radio service subscription is active. Satellite radio is not available in Alaska, Hawaii and Guam.

For all operation precautions, refer to "Audio operation precautions" in this section.

Audio main operation

VOL/ON·OFF control

Place the ignition switch in the ACC or ON position and push the VOL/ON·OFF control knob while the system is off to call up the mode that was playing immediately before the system was turned off.

To turn the system off, press the VOL/ON·OFF control knob.

Turn the VOL/ON·OFF control knob to adjust the volume.

This vehicle has Speed Sensitive Volume (SSV) for audio. The audio volume changes as the driving speed changes.

Audio settings

Audio		
	Bass	Adjusts the bass to the desired level.
	Treble	Adjusts the treble to the desired level.
	Balance	Adjusts the balance to the desired level. Balance adjusts the sound level between the left and right speakers.
	Fade	Adjusts the fade to the desired level. Fader adjusts the sound level between the front and rear speakers.
	Speed Adjust Vol.	Adjusts the speed sensitive volume function, which increases the volume of the audio system as the speed of the vehicle increases. Set to “OFF” to disable the feature. The higher the setting, the more the volume increases in relation to vehicle speed.
	DivX Registration Code	Displays the DivX registration code on the screen.
	Display Album Cover Art	Toggles on or off the display of the CD jacket art when available if a CD is playing.

Bass, treble, balance and fade can also be adjusted by pressing the AUDIO control knob and turning it to select the item to adjust. When the desired item is shown on the display, turn the tuning to adjust and then press the AUDIO button until the display returns to the main audio screen. If the button is not pressed for approximately 10 seconds, the radio or CD display will automatically reappear.

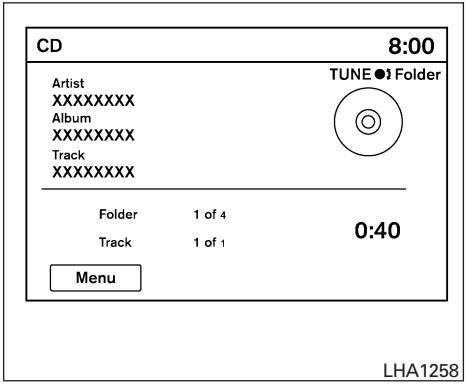

CD, DVD or USB with compressed audio files

While listening to a CD or compressed audio files, certain text might be able to be displayed (when CD encoded with text is being used).

Depending on how the CD or compressed audio files are encoded, the following text might be displayed:

- Folder displays the name of the current folder being accessed.
- File displays the name of the file currently playing.
- Song displays the ID3 encoded tag of the song name.
- Album displays the ID3 encoded tag of the album name.
- Artist displays the ID3 encoded tag of the artist's name.

Some of this text might not display while playing a regular CD.

FM/AM/SAT radio operation

FM/AM band select

Pressing the AM·FM button will change the band as follows:

AM → FM1 → FM2 → AM

When the AM·FM button is pressed while the ignition switch is in the ACC or ON position, the radio will come on at the station last played.

The last station played will also come on when the VOL/ON·OFF control knob is pressed ON.

If a compact disc is playing when the AM·FM button is pressed, the compact disc will automatically be turned off and the last radio station played will come on.

The FM stereo indicator STEREO will illuminate during FM stereo reception. When the stereo broadcast signal is weak, the radio will automatically change from stereo to monaural reception.

SAT band select

Pressing the SAT button will change the band as follows:

XM1* → XM2* → XM3* → XM1

When the SAT button is pressed while the ignition switch is in the ACC or ON position, the radio will come on at the station last played.

The last station played will also come on when the VOL/ON·OFF control knob is pressed ON.

*When the SAT button is pressed, the satellite radio reception will not be available unless an optional satellite receiver and antenna are installed and a SiriusXM® Satellite Radio service subscription is active. Satellite radio is not available in Alaska, Hawaii and Guam.

If a compact disc is playing when the SAT button is pressed, the compact disc will automatically be turned off and the last radio station played will come on.

TUNE/FOLDER (Tuning) knob

To manually tune the radio, turn the TUNE/FOLDER knob to the right or left.

SEEK/CAT and TRACK tuning buttons

For AM or FM:

Press the SEEK/CAT button or the TRACK button to tune from high to low or low to high frequencies and stop at the next broadcasting station.

For XM:

Press the SEEK/CAT button or the TRACK button to go to the first channel of the previous or next category.

SCAN tuning

Press the SCAN button to stop at each broadcasting station for 5 seconds. Pressing the SCAN button again during this 5 second period will stop scan tuning and the radio will remain tuned to that station. If the SCAN button is not pressed within 5 seconds, scan tuning moves to the next station.

1 to 6 Station memory operations

Six stations can be set for the AM band. Twelve stations can be set for the FM band (six for FM1, six for FM2). Eighteen channels can be set for the SAT radio (six for XM1, six for XM2, six for XM3 – if so equipped).

1. Choose the radio band AM, FM1 or FM2 using the FM·AM select button, or choose the satellite band XM1, XM2 or XM3 using the SAT button.
2. Tune to the desired station using manual, SEEK or SCAN tuning. Press and hold any of the desired station memory buttons (1 – 6) until the preset number is updated on the display and the sound is briefly muted.
3. The channel indicator will then come on and the sound will resume. Programming is now complete.
4. Other buttons can be set in the same manner.

If the battery cable is disconnected, or if the fuse opens, the radio memory will be canceled. In that case, reset the desired stations.

List (AM and FM)

Select the “List” key using the NISSAN controller or touch-screen to see a list of the presets in the AM, FM1 or FM2 preset banks.

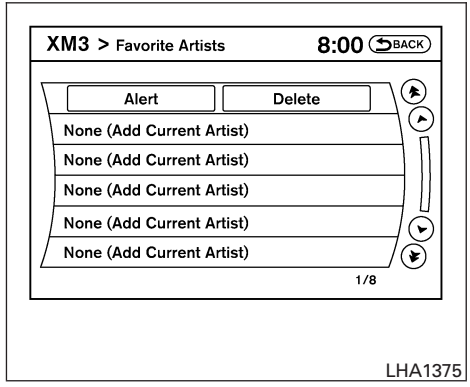

Menu (SiriusXM® Satellite Radio)

Select the “Menu” key using the NISSAN controller or touch-screen to see a list of options:

- Preset List — Displays the list of presets. Press and hold the touch-screen or ENTER button on the NISSAN controller to save a preset.
- Customize Channel List — deselect channels to skip while using the TUNE/FOLDER knob.
- Favorite Artist & Songs
  - Tags the current artist or song playing on SiriusXM® Satellite Radio as a favorite.

– Turn the Alert ON to indicate whenever a favorite artist or song is playing on SiriusXM® Satellite Radio. The audio system must be playing SiriusXM® Satellite Radio for this feature to work.

– Delete a favorite artist or song.

- Categories — Displays a category list for SiriusXM® Satellite Radio. Select a category to select the first channel for that category.
- Direct Tune — Tune to a channel by entering the channel number.

Radio data system (RDS)

RDS stands for Radio Data System, and is a data information service transmitted by some radio stations on the FM band (not AM band). Currently, most RDS stations are in large cities, but many stations are now considering broadcasting RDS data.

RDS can display:

- Station call sign, such as “WHFR 98.3”.
- Station name, such as “The Groove”.
- Music or programming type such as “Classical”, “Country”, or “Rock”.
- Station specific text.

If the station broadcasts RDS information, the text information is automatically displayed.

Compact disc (CD) player operation

Place the ignition in the ACC or ON position and insert the compact disc into the slot with the label side facing up. The compact disc will be guided automatically into the slot and start playing.

If the radio is already operating, it will automatically turn off and the compact disc will play.

If the system has been turned off while the compact disc was playing, pressing the VOL/ON·OFF control knob will start the compact disc.

DISC·AUX button

When the DISC·AUX button is pressed with the system off and the compact disc loaded, the system will turn on and the compact disc will start to play.

When the DISC·AUX button is pressed with the compact disc loaded but the radio playing, the radio will automatically be turned off and the compact disc will start to play.

SEEK/CAT and TRACK buttons

When the SEEK/CAT button is pressed while a compact disc is playing, the track being played returns to its beginning. Press several times to skip back through tracks. The compact disc will go back the number of times the button is pressed.

When the TRACK button is pressed while the compact disc is playing, the next track will start to play from its beginning. Press several times to skip through tracks. The compact disc will advance the number of times the button is pressed. (When the last track on the compact disc is skipped through, the first track will be played.)

The NISSAN controller can also be used to select tracks when a CD is being played.

SEEK/CAT and TRACK (Rewind and Fast Forward) buttons

Press and hold the SEEK/CAT (rewind) button or the TRACK (fast forward) button while a compact disc is playing; the compact disc will play while rewinding or fast forwarding. When

the button is released, the compact disc will return to normal play speed.

TUNE/FOLDER knob

While playing a CD with compressed audio files, turn the TUNE/FOLDER knob right or left to play the next or previous folder.

CD EJECT button

When the ⏏ button is pressed with the compact disc loaded, the compact disc will be ejected.

When the ⏏ button is pressed while the compact disc is being played, the compact disc will eject and the system will turn off.

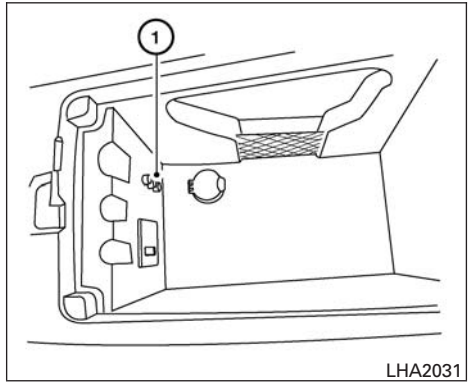

AUX (auxiliary) input jacks

The auxiliary input jacks are located inside the center console ①. NTSC compatible devices such as video games, camcorders and portable video players can be connected to the auxiliary input jacks. Audio devices, such as some MP3 players, can also be connected to the system through the auxiliary input jacks.

The auxiliary input jacks are color coded for identification purposes:

- Red – right channel audio input
- White – left channel audio input
- Yellow – video input

Before connecting a device to the auxiliary input jacks, turn off the power of the portable device.

With a compatible device connected to the auxiliary input jacks, press the DISC·AUX button repeatedly until the AUX mode appears in the display. The output from the device will be played through the display (when the vehicle is in the (P) Park position and the parking brake engaged) and audio system.

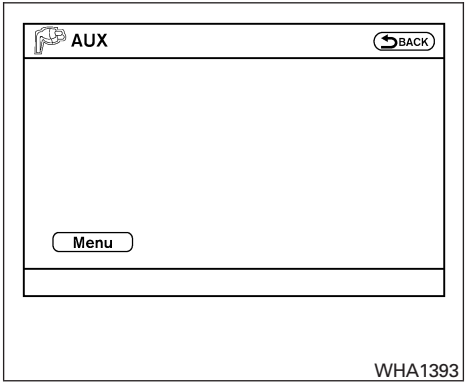

WHA1393

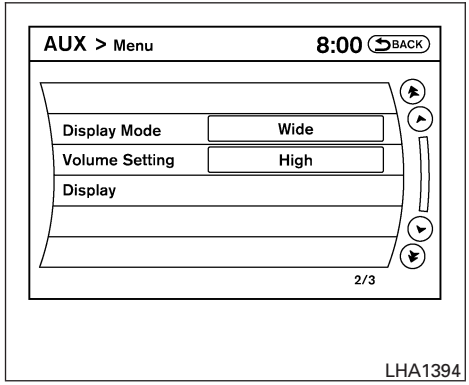

LHA1394

AUX settings

Select the "Settings" key using the NISSAN controller.

The display mode can be set to Normal, Wide or Cinema. The volume setting can be set to Low, Medium or High.

Additional features

For additional information about the iPod® player available with this system, refer to "iPod® player operation with Navigation System" in this section.

For additional information about the USB interface available with this system, refer to "USB (Universal Serial Bus) Connection Port (models with Navigation System)" in this section.

For additional information about the Bluetooth® streaming audio feature available with this system, refer to "Bluetooth® streaming audio" in this section.

DIGITAL VERSATILE DISC (DVD) PLAYER OPERATION (models with Navigation System)

Precautions

Start the engine when using the DVD entertainment system.

Movies will not be shown on the front display while the vehicle is in any drive position to reduce driver distraction. Audio is available when a movie is played. To view movies on the front display, stop the vehicle in a safe location, move the shift lever to the P (Park) position and apply the parking brake.

WARNING

- **The driver must not attempt to operate the DVD system or wear the headphones while the vehicle is in motion so that full attention may be given to vehicle operation.**
- **Do not attempt to modify the system to display a movie on the front screen while the vehicle is being driven. Doing so may distract the driver and may cause a collision and serious personal injury or death.**

CAUTION

- **Only operate the DVD while the vehicle engine is running. Operating the DVD for extended periods of time with the engine OFF can discharge the vehicle battery.**

- **Do not allow the system to get wet. Excessive moisture such as spilled liquids may cause the system to malfunction.**
- **While playing VIDEO-CD media, this DVD player does not guarantee complete functionality of all VIDEO-CD formats.**

Playing a DVD

DISC-AUX button

Park the vehicle in a safe location for the front seat occupants to operate the DVD drive while watching the images.

Press the DISC-AUX button until the DVD mode is active on the display.

When a DVD is loaded, it will be replayed automatically.

The operation screen will be turned on when the DISC-AUX button is pressed while a DVD is playing. The operation screen will turn off automatically after a period of time. To turn it on again, press the DISC-AUX button.

DVD operation keys

When the DVD is playing without the operation screen being shown, you may use the touch-screen to select items from the displayed video. You may also use the NISSAN controller to select an item from the displayed video. When the operation screen is being shown, use the NISSAN controller or the touch-screen to select an item from the displayed menus.

PAUSE

Select the ⏸ key to pause the DVD. To resume playing the DVD, use the ▶ key.

PLAY

Select the ▶ key to start playing the DVD or resume playing the DVD after it has been paused.

STOP

Select the ■ key to stop playing the DVD.

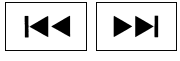

NEXT/PREVIOUS CHAPTER

Select the ▶▶| key to skip the chapter(s) of the disc forward. Select the |◀◀ key to skip the chapter(s) of the disc backward. The chapters will advance forward or backward the number of times the respective key is touched or selected with the NISSAN controller.

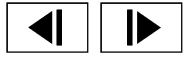

CM SKIP

This function is only for DVD-VIDEO and DVD-VR. Select the |▶ or ◀| key to fast forward or rewind a set interval of time based on the CM settings. For additional information, refer to “DVD settings” in this section.

Top Menu

When the “Top Menu” key is selected while the DVD is playing, the top menu specific to each disc will be displayed. For additional information, refer to the instructions attached to the disc.

DVD settings

Select the “Settings” key to adjust the following settings:

- **Key** (DVD-VIDEO)
  Displays the operation keys for the specific DVD menu.
  - Select the directional keys to move the cursor on the DVD menu.
  - Select the “Enter” key to fix the selected menu item.
  - Select the “Move” key to move the location of the operation keys on the screen.

– Select the “Back” key to return to the previous menu screen.

– Select the “Hide” key to hide the operation keys.

- **Title Menu** (DVD-VIDEO)
  Some menus specific to each disc will be shown. For additional information, refer to the instructions attached to the disc.
- **Title Search** (DVD-VIDEO, DVD-VR)
  The scene with the specified title will be displayed the number of times the “+” or “-” side is selected.
- **Group Search** (VIDEO CD)
  The scene with the specified group will be displayed the number of times the “+” or “-” side is selected.
- **10 Key Search** (DVD-VIDEO, VIDEO CD, CD-DA, DVD-VR)
  Select the “10 Key Search” key to open the number entry screen. Input the number you want to search for and select the “OK” key. The specified Title/Chapter or Group/Track will be played.
- **Select No.** (VIDEO CD)
  Select the “Select No.” key to open the number entry screen. Input the number you want to search for and select the “OK” key. The specified scene will be played.
- **Angle** (DVD-VIDEO)
  If the DVD contains different angles (such as moving images), the current image angle can be switched to another one. Select the “Angle” key and use the “+” or “-” key to change the angle.
- **Angle Mark** (DVD-VIDEO)
  When this item is turned on, an angle mark will be shown on the bottom of the screen if the scene can be seen from a different angle.
- **Menu Skip** (DVD-VIDEO)
  DVD menus are automatically configured and the contents will be played directly when the “Menu Skip” key is turned on. Note that some discs may not be played directly even if this item is turned on.
- **CM Skip** (DVD-VIDEO)
  Select the “CM Skip” key to choose the setting time for CM backward and forward operations. Use the “+” or “-” key to choose a setting time of 15, 30 or 60 seconds.
- **DRC** (DVD-VIDEO, DVD-VR)
  DRC (Dynamic Range Compression) automatically adjusts the soundtrack volume level to maintain a more even sound to the speakers.
- **DVD Language** (DVD-VIDEO, VIDEO CD)
  Select the “DVD Language” key to open the number entry screen. Input the number corresponding to the preferred language and select the “OK” key. The DVD top menu language will be changed to the one specified.
- **Display**
  Adjust the image quality of the screen by selecting the preferred adjustment items.
- **Audio**
  Choose the preferred language for the audio.
- **Subtitle** (DVD-VIDEO, DVD-VR)
  Choose the preferred language for the subtitles.
- **Display Mode** (DVD-VIDEO, VIDEO CD, DVD-VR)
  Choose from the “Full”, “Wide”, “Normal” or “Cinema” mode.
- **Title List** (DVD-VR)
  Choose the preferred title from the list.
- **Play Mode**
  Choose the preferred play mode.
- **PG/PL Mode** (DVD-VR)
  Choose from the “PG” or “PL” mode.

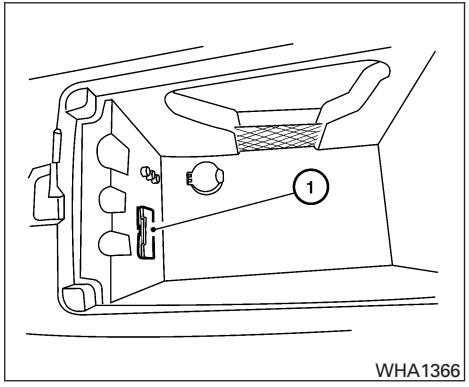

USB (Universal Serial Bus) CONNECTION PORT (models without Navigation System) (if so equipped)

Connecting a device to the USB connection port

⚠ WARNING

Do not connect, disconnect, or operate the USB device while driving. Doing so can be a distraction. If distracted you could lose control of your vehicle and cause an accident or serious injury.

⚠ CAUTION

- **Do not force the USB device into the USB port. Inserting the USB device tilted or up-side-down into the port may damage the port. Make sure that the USB device is connected correctly into the USB port.**
- **Do not grab the USB port cover (if so equipped) when pulling the USB device out of the port. This could damage the port and the cover.**
- **Do not leave the USB cable in a place where it can be pulled unintentionally. Pulling the cable may damage the port.**

Refer to your device manufacturer's owner information regarding the proper use and care of the device.

The USB connection port is located in the center console. Insert the USB device into the port①.

When a compatible storage device is plugged into the port, compatible audio files on the storage device can be played through the vehicle's audio system.

Audio file operation

AUX button

Place the ignition switch in the ON or ACC position and press the AUX button to switch to the USB input mode. If another audio source is playing and a USB memory device is inserted, press the AUX button repeatedly until the center display changes to the USB memory mode.

If the system has been turned off while the USB memory was playing, push the ON-OFF/VOL control knob to restart the USB memory.

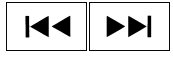

SEEK/CAT and TRACK (Reverse or Fast Forward) buttons

Press and hold the SEEK/CAT ⏮ (rewind) button or TRACK ⏭ (fast forward) button for 1.5 seconds while an audio file on the USB device is playing to reverse or fast forward the track being played. The track plays at an increased speed while reversing or fast forwarding. When the button is released, the audio file returns to normal play speed.

SEEK/CAT and TRACK buttons

Press the SEEK/CAT button ⏮ while an audio file on the USB device is playing to return to the beginning of the current track. Press the SEEK/CAT button ⏮ several times to skip backward several tracks.

Press the TRACK button ⏭ while an audio file on the USB device is playing to advance one track. Press the TRACK button ⏭ several times to skip forward several tracks. If the last track in a folder on the USB device is skipped, the first track of the next folder is played.

Folder selection

To change to another folder in the USB memory, turn the TUNE/FOLDER knob or choose a folder displayed on the screen.

RPT (repeat)/RDM (random) button

When the RPT (repeat)/RDM (random) button is pressed while the USB memory is playing, the play pattern can be changed as follows:

Repeat All → 1 Folder Repeat → 1 Track Repeat → All Random → 1 Folder Random → Repeat All

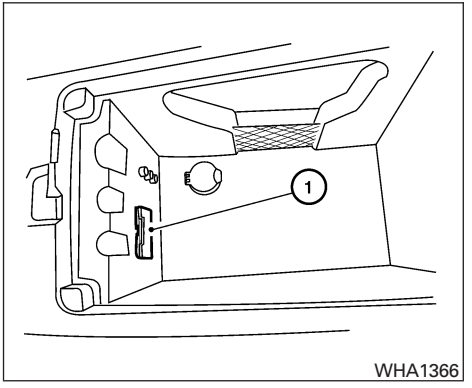

WHA1366

LHA1378

USB (Universal Serial Bus) CONNECTION PORT (models with Navigation System) (if so equipped)

Connecting a device to the USB connection port

⚠ WARNING

Do not connect, disconnect, or operate the USB device while driving. Doing so can be a distraction. If distracted you could lose control of your vehicle and cause an accident or serious injury.

⚠CAUTION

- **Do not force the USB device into the USB port. Inserting the USB device tilted or up-side-down into the port may damage the port. Make sure that the USB device is connected correctly into the USB port.**
- **Do not grab the USB port cover (if so equipped) when pulling the USB device out of the port. This could damage the port and the cover.**
- **Do not leave the USB cable in a place where it can be pulled unintentionally. Pulling the cable may damage the port.**

Refer to your device manufacturer's owner information regarding the proper use and care of the device.

The USB connection port is located in the center console. Insert the USB device into the port ①.

When a compatible storage device is plugged into the port, compatible audio files on the storage device can be played through the vehicle's audio system.

Audio file operation

DISC▪AUX button

Place the ignition switch in the ON or ACC position and press the DISC▪AUX button to switch to the USB input mode. If another audio source is playing and a USB memory device is inserted, press the DISC▪AUX button repeatedly until the center display changes to the USB memory mode.

If the system has been turned off while the USB memory was playing, push the ON-OFF/VOL control knob to restart the USB memory.

⏮ ⏭ SEEK/CAT and TRACK (Reverse or Fast Forward) buttons

Press and hold the SEEK/CAT ⏮ (rewind) button or TRACK ⏭ (fast forward) button for 1.5 seconds while an audio file on the USB device is playing to reverse or fast forward the track being played. The track plays at an increased speed while reversing or fast forwarding. When the button is released, the audio file returns to normal play speed.

⏮ ⏭ SEEK/CAT and TRACK buttons

Press the SEEK/CAT button ⏮ while an audio file on the USB device is playing to return to the beginning of the current track. Press the SEEK/CAT button ⏮ several times to skip backward several tracks.

Press the TRACK button ⏭ while an audio file on the USB device is playing to advance one track. Press the TRACK button ⏭ several times to skip forward several tracks. If the last track in a folder on the USB device is skipped, the first track of the next folder is played.

Folder selection

To change to another folder in the USB memory, turn the TUNE/FOLDER knob or choose a folder displayed on the screen.

RPT (repeat)/RDM (random) button

When the RPT (repeat)/RDM (random) button is pressed while the USB memory is playing, the play pattern can be changed as follows:

Normal → 1 Folder Repeat → 1 Track Repeat → All Random → 1 Folder Random → Normal

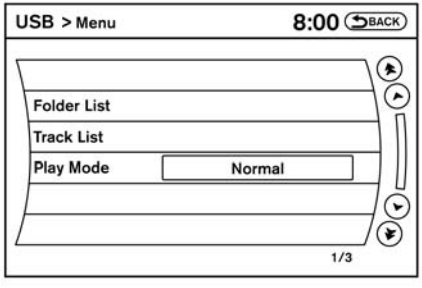

LHA2785

Menu

There are some options available during playback. Select one of the following that are displayed on the screen, if necessary. Refer to the following information for each item.

- Movie Playback
  Switch to the movie playback mode. This item is displayed only when the USB memory contains movie files.
  The shift lever must be in Park (P) with the parking brake engaged to watch movies from a USB device.
- Folder List/Track List
  Displays the folder or track list. The “Movie Playback” key is also displayed in this list screen and enables you to switch to the movie playback mode.
- Play Mode
  Choose the preferred play mode using the NISSAN controller or the touch-screen.

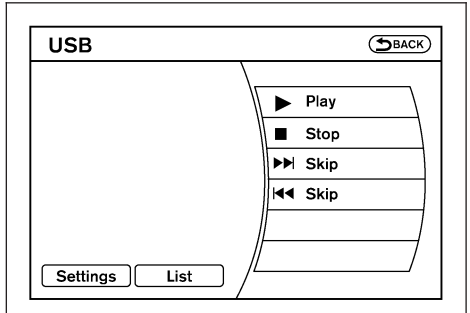

LHA1379

Movie file operation

Park the vehicle in a safe location for the front seat occupants to operate the USB memory while watching the images.

DISC-AUX button

When the DISC-AUX button is pushed with the system off and the USB memory inserted, the system will turn on. If another audio source is playing and the USB memory is inserted, press the DISC-AUX button repeatedly until the center display changes to the USB memory mode.

Operation keys

To operate the USB memory, select the desired key displayed on the display screen.

- ⏸ Pause

  Select the ⏸ key to pause the movie file. To resume playing the movie file, use the ▶ key.

- ▶ Play

  Select the ▶ key to start playing the movie file or resume the movie file if it has been paused.

- ■ Stop

  Select the ■ key to stop playing the movie file.

- ▶▶| Next Chapter/Fast Forward

  Select the ▶▶| key to skip the chapter(s) of the disc forward. The chapters will advance the number of times the key is selected. Press and hold the key to fast forward the chapter.

- |◀◀ Previous Chapter/Rewind

  Select the |◀◀ key to skip the chapter(s) of the disc backward. The chapters will go back the number of times the key is selected. Press and hold the key to rewind the chapter.

List

Select the “List” key on the movie file operation screen to display the file list.

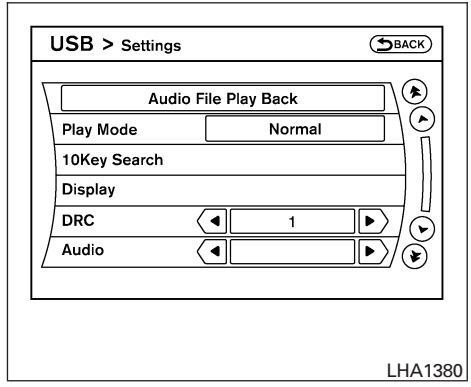

Settings

Select the “Settings” key to adjust the following settings:

- **Audio File Playback**
  Switch to the audio playback mode. This item is displayed only when the USB memory contains audio files.

- **Play Mode**
  Choose between the “Normal” or “1 Track Repeat” play modes.

- **10 Key Search**
  Select the “10 Key Search” key to open the number entry screen. Input the number you want to search for and the specified file or folder will be played.
- **Display**
  Adjust the image quality of the screen.
- **DRC**
  DRC (Dynamic Range Compression) automatically adjusts the soundtrack volume level to maintain a more even sound to the speakers.
- **Audio**
  Choose the preferred language of the audio.
- **Subtitle**
  Choose the preferred language of the subtitles.
- **Display Mode**
  Choose between the “Normal”, “Wide”, “Cinema” or “Full” display modes.

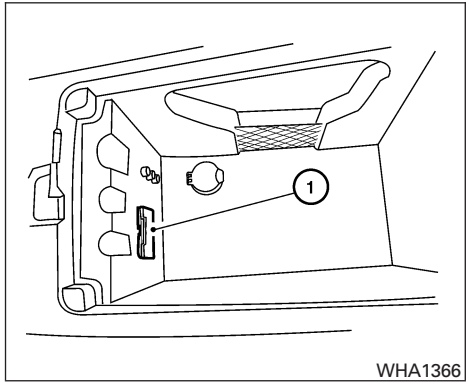

iPod®* PLAYER OPERATION WITHOUT NAVIGATION SYSTEM (if so equipped)

Connecting iPod®

⚠ WARNING

Do not connect, disconnect or operate the USB device while driving. Doing so can be a distraction. If distracted you could lose control of your vehicle and cause an accident or serious injury.

⚠ CAUTION

- **Do not force the USB device into the USB port. Inserting the USB device tilted or up-side-down into the port may damage the port. Make sure that the USB device is connected correctly into the USB port.**
- **Do not grab the USB port cover (if so equipped) when pulling the USB device out of the port. This could damage the port and the cover.**
- **Do not leave the USB cable in a place where it can be pulled unintentionally. Pulling the cable may damage the port.**

Refer to your device manufacturer’s owner information regarding the proper use and care of the device.

To connect an iPod® to the vehicle so that the iPod® can be controlled with the audio system controls and display screen, use the USB connection port located in the center console. Connect the iPod®-specific end of the cable to the iPod® and the USB end of the cable to the USB connection port on the vehicle ①. If your iPod® supports charging via a USB connection, its battery will be charged while connected to the vehicle with the ignition switch in the ACC or ON position.

While connected to the vehicle, the iPod® can only be operated by the vehicle audio controls.

To disconnect the iPod® from the vehicle, remove the USB end of the cable from the USB connection port on the vehicle, then remove the cable from the iPod®.

* iPod® is a trademark of Apple Inc., registered in the U.S. and other countries.

Compatibility

The following models are compatible:

- iPod® 5th Generation - version 1.2.1
- iPod® Classic - version 1.1
- iPod® Touch - version 2.1.0
- iPod® Nano - 1st generation version 1.3.1
- iPod® Nano - 2nd generation version 1.1.3
- iPod® Nano - 3rd generation version 1.0.2

Make sure that your iPod® firmware is updated to the version indicated above.

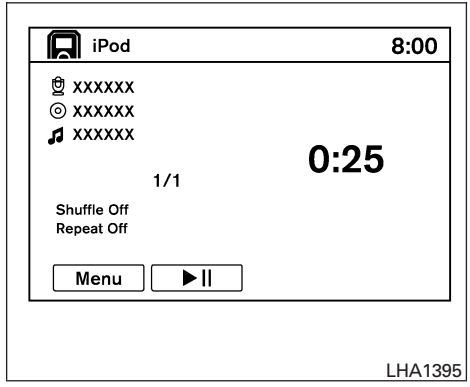

Audio main operation

Place the ignition switch in the ACC or ON position. Press the AUX button repeatedly to switch to the iPod® mode.

If the system has been turned off while the iPod® was playing, pressing the VOL/ON·OFF control knob will start the iPod®.

AUX button

When the AUX button is pressed with the system off and the iPod® connected, the system will turn on. If another audio source is playing and the iPod® is connected, press the AUX button repeatedly until the center display changes to the iPod® mode.

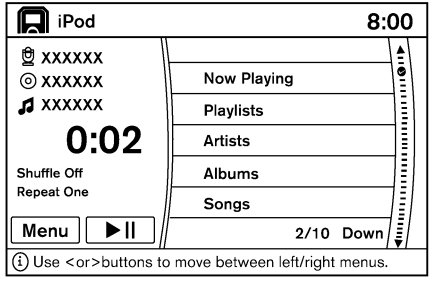

LHA1396

Interface

The interface for iPod® operation shown on the vehicle center display is similar to the iPod® interface. Use the NISSAN controller and the BACK button to play the iPod® with your favorite settings.

The following items can be chosen from the menu list screen. For additional information about each item, refer to the iPod® Owner's Manual.

- Playlists
- Podcasts
- Songs
- Albums
- Artists
- Genres
- Composers
- Audiobooks

The following keys shown on the screen are also available:

- MENU: returns to the previous screen.
- ▶II : plays/pauses the music selected.

SEEK/CAT and TRACK buttons

When the ⏮ SEEK/CAT button or ⏭ TRACK button is pressed for less than 1.5 seconds while the iPod® is playing, the next track or the beginning of the current track on the iPod® will be played.

When the ⏮ SEEK/CAT button or ⏭ TRACK button is pressed for more than 1.5 seconds while the iPod® is playing, the iPod® will play while fast forwarding or rewinding. When the button is released, the iPod® will return to the normal play speed.

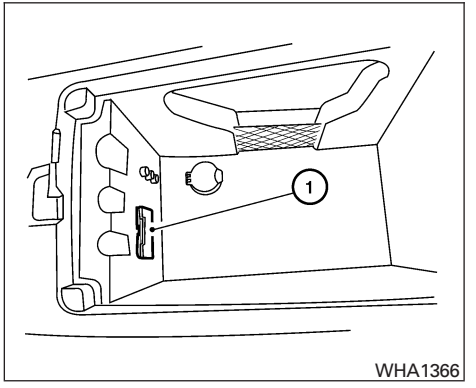

WHA1366

iPod®* PLAYER OPERATION WITH NAVIGATION SYSTEM (if so equipped)

Connecting iPod®

⚠WARNING

Do not connect, disconnect or operate the USB device while driving. Doing so can be a distraction. If distracted you could lose control of your vehicle and cause an accident or serious injury.

⚠ CAUTION

- **Do not force the USB device into the USB port. Inserting the USB device tilted or up-side-down into the port may damage the port. Make sure that the USB device is connected correctly into the USB port.**
- **Do not grab the USB port cover (if so equipped) when pulling the USB device out of the port. This could damage the port and the cover.**
- **Do not leave the USB cable in a place where it can be pulled unintentionally. Pulling the cable may damage the port.**

Refer to your device manufacturer's owner information regarding the proper use and care of the device.

To connect an iPod® to the vehicle so that the iPod® can be controlled with the audio system controls and display screen, use the USB connection port located in the center console. Connect the iPod®-specific end of the cable to the iPod® and the USB end of the cable to the USB connection port on the vehicle ①. If your iPod® supports charging via a USB connection, its battery will be charged while connected to the vehicle with the ignition switch in the ACC or ON position.

While connected to the vehicle, the iPod® can only be operated by the vehicle audio controls.

To disconnect the iPod® from the vehicle, remove the USB end of the cable from the USB connection port on the vehicle, then remove the cable from the iPod®.

* iPod® is a trademark of Apple Inc., registered in the U.S. and other countries.

Compatibility

The following models are compatible:

- iPod® 5th Generation (firmware version 1.2.3 or later)
- iPod® Classic (firmware version 1.1.1 or later)
- iPod® Touch (firmware version 2.0.0 or later)*
- iPod® nano - 1st generation (firmware version 1.3.1 or later)
- iPod® nano - 2nd generation (firmware version 1.1.3 or later)
- iPod® nano - 3rd generation (firmware version 1.1.3 or later)
- iPod® nano - 4th generation (firmware version 1.0.4 or later)
- iPod® nano - 5th generation (firmware version 1.0.1 or later)

* Some features of this iPod® may not be fully functional.

Make sure that your iPod® firmware is updated to the version indicated above.

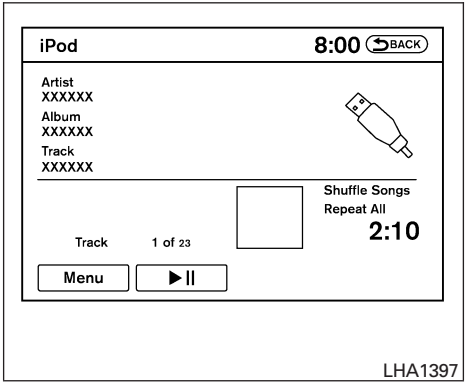

LHA1397

Audio main operation

Place the ignition switch in the ACC or ON position. Press the DISC·AUX button repeatedly to switch to the iPod® mode.

If the system has been turned off while the iPod® was playing, pressing the VOL/ON·OFF control knob will start the iPod®.

DISC·AUX button

When the DISC·AUX button is pressed with the system off and the iPod® connected, the system will turn on. If another audio source is playing and the iPod® is connected, press the DISC·AUX button repeatedly until the center display changes to the iPod® mode.

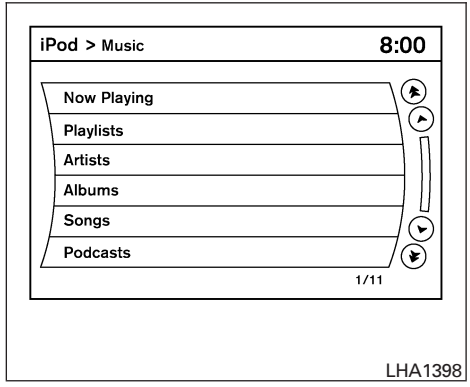

LHA1398

Interface

The interface for iPod® operation shown on the vehicle center display is similar to the iPod® interface. Use the NISSAN controller and the BACK button to play the iPod® with your favorite settings. The touch-screen can also be used to control your favorite settings.

The following items can be chosen from the menu list screen. For additional information about each item, refer to the iPod® Owner's Manual.

- Now Playing
- Playlists
- Artists

- Albums
- Songs
- Podcasts
- Genres
- Composers
- Audiobooks
- Shuffle Songs
- Play Mode

The following keys shown on the screen are also available:

- MENU: returns to the previous screen.
- ▶II : plays/pauses the music selected.

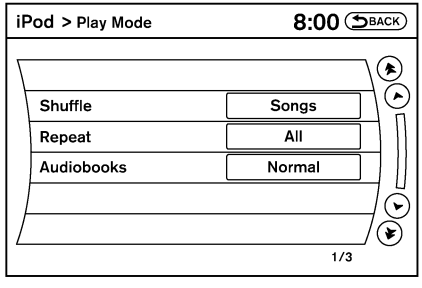

LHA1315

Play mode

While the iPod® is playing, touch the “Menu” key to display the iPod® menu. Touch the “Play Mode” key to display the Play Mode screen and adjust the settings for Shuffle, Repeat and Audiobooks. For additional information, refer to the iPod® Owner’s Manual.

SEEK/CAT and TRACK buttons

When the ⏮ SEEK/CAT button or ⏭ TRACK button is pressed for less than 1.5 seconds while the iPod® is playing, the next track or the beginning of the current track on the iPod® will be played.

When the ⏮ SEEK/CAT button or ⏭ TRACK button is pressed for more than 1.5 seconds while the iPod® is playing, the iPod® will play while fast forwarding or rewinding. When the button is released, the iPod® will return to the normal play speed.

The NISSAN controller can also be used to select tracks when the iPod® is playing.

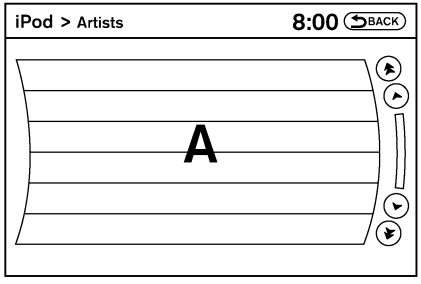

LHA1399

Scrolling menus

While navigating long lists of artists, albums or songs in the music menu, it is possible to scroll the list by the first letter. To activate letter indexing, perform one of the following:

- Turn the NISSAN controller quickly.
- Press and hold the up/down directional arrows on the NISSAN controller.
- Touch and hold the page up/down arrows on the touch-screen.

To exit the scrolling by letter mode, perform one of the following:

- Press the ENTER button on the NISSAN controller.
- Push the ENTER switch on the steering wheel.
- Do not touch the controls for 2 seconds.

BLUETOOTH® STREAMING AUDIO (if so equipped)

If you have a compatible Bluetooth® audio device that is capable of playing audio files, the device can be connected to the vehicle's audio system so that the audio files on the device play through the vehicle's speakers.

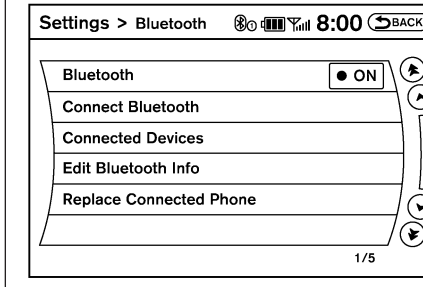

LHA1316

Connecting Bluetooth® audio

To connect your Bluetooth® audio device to the vehicle, follow the procedure below:

1. Press the SETTING button on the control panel.
2. Touch the "Bluetooth" key.
3. Touch the "Connect Bluetooth" key.

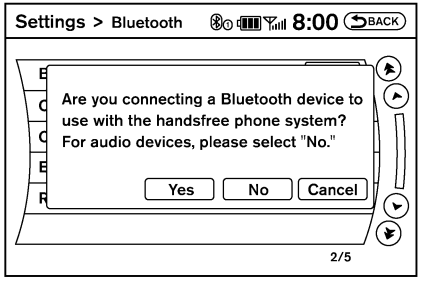

LHA1317

4. A screen will appear asking if you are connecting the device to use with the handsfree phone system. Select the “No” key.

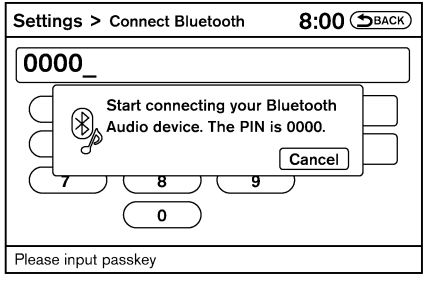

LHA1351

5. Enter a PIN of your choice. It will be needed by your Bluetooth® audio device to complete the connection process. For additional information, refer to the Bluetooth® audio device’s owner’s manual.

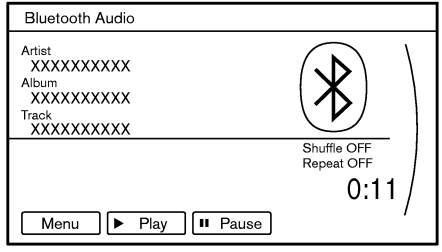

SAA2510

Audio main operation

To switch to the Bluetooth® audio mode, press the DISC-AUX button repeatedly until the Bluetooth® audio mode is displayed on the screen.

The controls for the Bluetooth® audio are displayed on the screen.

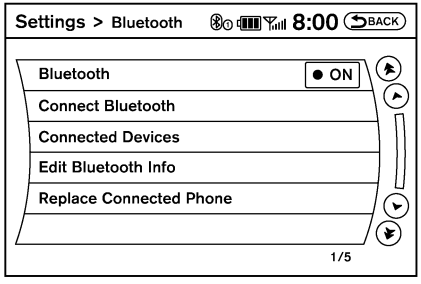

LHA1316

Bluetooth® audio settings

To adjust the Bluetooth® audio settings, follow the procedure below:

1. Press the SETTING button on the control panel.
2. Touch the “Bluetooth” key.
3. Touch the “Connected Devices” key.

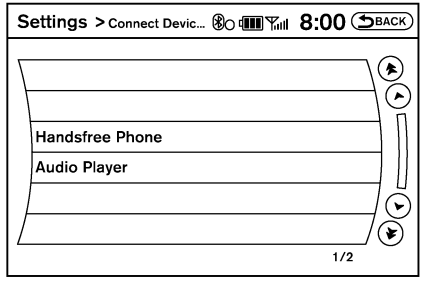

LHA1296

4. Touch the “Audio Player” key.

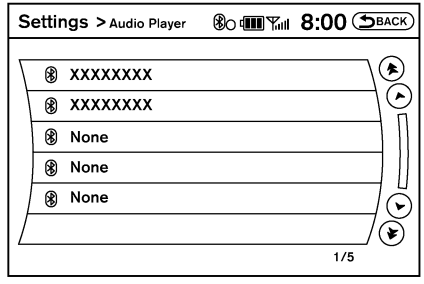

LHA1297

5. A list of the connected Bluetooth® audio players is displayed. Touch the name of the device you wish to edit.

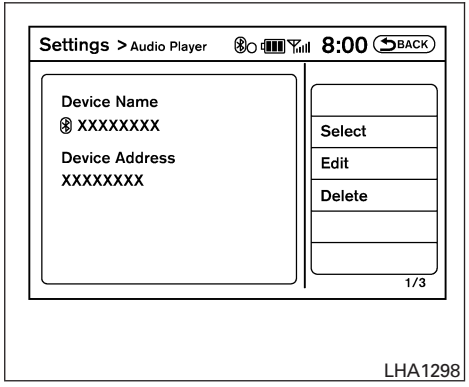

LHA1298

6. The Device Name and Device Address are displayed on the screen. Touch the “Select” key to make this device the active Bluetooth® audio player. Touch the “Edit” key to edit the details of the player, such as Device Name. Touch the “Delete” key to delete the device.

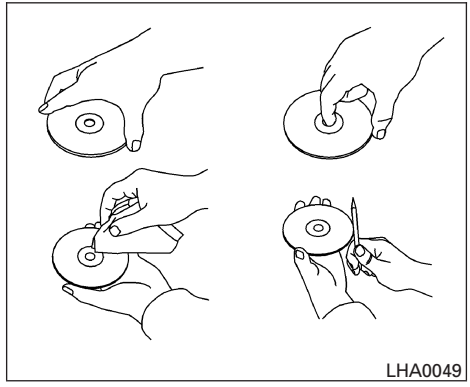
LHA0049

CD CARE AND CLEANING

- Handle a CD by its edges. Do not bend the disc. Never touch the surface of the disc.
- Always place the discs in the storage case when they are not being used.
- To clean a disc, wipe the surface from the center to the outer edge using a clean, soft cloth. Do not wipe the disc using a circular motion.
- Do not use a conventional record cleaner or alcohol intended for industrial use.
- A new disc may be rough on the inner and outer edges. Remove the rough edges by rubbing the inner and outer edges with the side of a pen or pencil as illustrated.

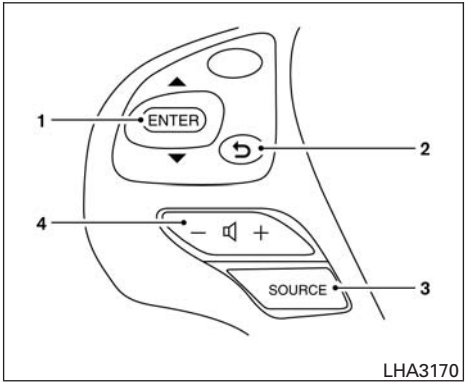

1. ▲▼ (menu control) switch/ENTER button
2. ↩ (back) switch
3. SOURCE switch
4. Volume control switch

STEERING WHEEL SWITCH FOR AUDIO CONTROL

The audio system can be operated using the controls on the steering wheel.

POWER on switch

With the ignition switch in the ACC or ON position, push the SOURCE switch to turn the audio system on.

SOURCE select switch

Push the source select switch to change the mode in the following sequence:

Models without Navigation System
AM → FM1 → FM2 → XM1 → XM2 → XM3 → USB/iPod®* → CD → AUX* → AM.

Models with Navigation System
AM → FM1 → FM2 → XM1 → XM2 → XM3 → CD/DVD* → USB/iPod®* → Bluetooth® Audio* → AUX* → AM.

* These modes are only available when compatible media storage is inserted into the device.

Volume control switch

Push the volume control switch to increase or decrease the volume.

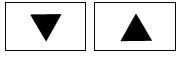

Menu control switch/ENTER button

While the display is showing a MAP, STATUS or Audio screen, tilt the Menu Control switch upward or downward to select a station, track, CD or folder. For most audio sources, tilting the switch up/down for more than 1.5 seconds provides a different function than a tilting up/down for less than 1.5 seconds.

AM and FM

- Tilt up/down for less than 1.5 seconds to increase or decrease the preset station.
- Tilt up/down for more than 1.5 seconds to seek up or down to the next station.
- Press the ENTER button to show the list of preset stations.

XM (if so equipped)

- Tilt up/down for less than 1.5 seconds to increase or decrease the preset station.
- Tilt up/down for more than 1.5 seconds to go to the next or previous category.
- Press the ENTER button to show the XM Menu.

iPod®

- Tilt up/down for less than 1.5 seconds to increase or decrease the track number.
- Press the ENTER button to show the iPod Menu.

CD

- Tilt up/down for less than 1.5 seconds to increase or decrease the track number.
- Tilt up/down for more than 1.5 seconds to increase or decrease the folder number (if playing compressed audio files).
- Press the ENTER button to show the CD Menu.

DVD (if so equipped)

- Tilt up/down for less than 1.5 seconds to increase or decrease the track number.
- Tilt up/down for more than 1.5 seconds to increase or decrease the title number.
- Press the ENTER button to select an item from the DVD display.
- When the transparent operation menu appears, the switch will control the menu.

USB

- Tilt up/down for less than 1.5 seconds to increase or decrease the track number.
- Tilt up/down for more than 1.5 seconds to increase or decrease the folder number.
- Press the ENTER button to show the USB Menu.

Bluetooth® Audio

- Tilt up/down for less than 1.5 seconds to increase or decrease the track number.

AUX

- Press the ENTER button to show the AUX Menu.

BACK switch

Press the ⮌ switch to return to the previous screen or cancel the current selection.

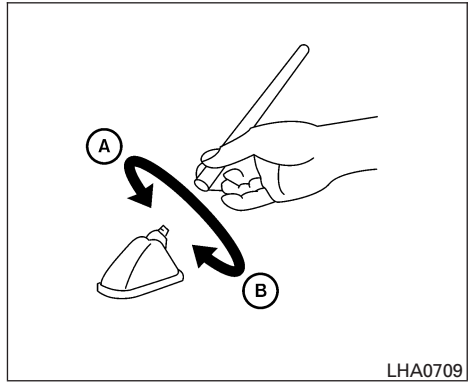

ANTENNA

The rod antenna cannot be shortened, but can be removed. When you need to remove the antenna, turn the antenna rod counterclockwise Ⓑ.

To install the antenna rod, turn the antenna rod clockwise Ⓐ and hand tighten.

The window antenna pattern is printed inside the rear window.

⚠ CAUTION

- **Always properly tighten the antenna rod during installation or the antenna rod may break during vehicle operation.**
- **Do not place metal film near the rear window glass or attach any metal parts to it. This may cause poor reception or noise.**
- **When cleaning the inside of the rear window, be careful not to scratch or damage the rear window antenna. Lightly wipe along the window antenna with a dampened soft cloth.**

Window antenna

The antenna pattern is printed inside the rear passenger and driver side windows.

⚠ CAUTION

- **Do not place metalized film near the rear driver or passenger side window glass or attach any metal parts to it. This may cause poor reception or noise.**
- **When cleaning the inside of the rear driver or passenger side window, be careful not to scratch or damage the window antenna. Lightly wipe along the antenna with a dampened soft cloth.**

DUAL HEAD RESTRAINT/HEADREST DVD SYSTEM (if so equipped)

If your vehicle is equipped with the Dual Head Restraint/Headrest DVD System, you can enjoy playing video files via a DVD, CD or USB memory that provides images and sound both from the front and rear display screens.

You can also enjoy compatible auxiliary devices such as video games, camcorders or portable video players through the auxiliary jacks.

The front and right/left rear displays can show different sources individually. The maximum of three audio sources, such as an iPod®, DVD and auxiliary device, can be enjoyed at the same time.

⚠ WARNING

The driver must not attempt to operate the Dual Head Restraint/Headrest DVD System while driving so full attention may be given to vehicle operation.

Park the vehicle in a safe location and apply the parking brake to view the images on the front center display screen using the DVD player.

⚠ CAUTION

- **Do not attempt to use the system in extremely high or low temperature condition [below −4°F (−20°C) or above 158°F (70°C)].**

- **To avoid draining the vehicle battery, do not operate the system for more than 15 minutes without starting the engine.**

The front display is designed not to show the images while driving, as the driver's attention must be given to vehicle operation for safety. Sounds are available. To show the images in the front display, stop the vehicle in a safe location, move the shift lever to the P (Park) position and apply the parking brake.

SYSTEM COMPONENTS

Rear displays

⚠ CAUTION

- **The glass screen on the liquid crystal display may break if hit with a hard or sharp object. If the glass breaks, do not touch the liquid crystalline material. In case of contact with skin, wash immediately with soap and water.**
- **Use soft, damp cloth when cleaning the Dual Head Restraint/Headrest DVD System components. Do not use solvents or cleaning solutions.**

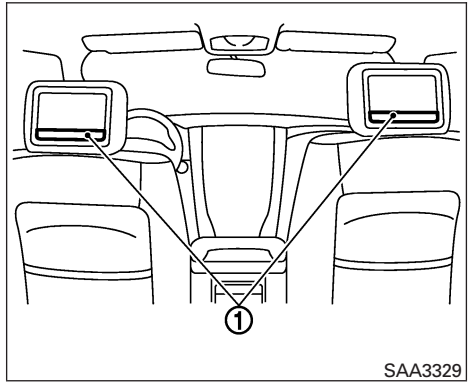

SAA3329

The rear displays are located on the back of the front head restraints (headrests).

Use the remote control to operate the rear display screen.

Press the preferred side (L or R) of the power ON/OFF button on the remote control to activate the rear display.

The rear screens can also be activated using the NISSAN controller. For additional information, refer to "Rear display settings" in this section.

Do not block the range of the wireless remote control receiver and wireless headphones transmitter ①.

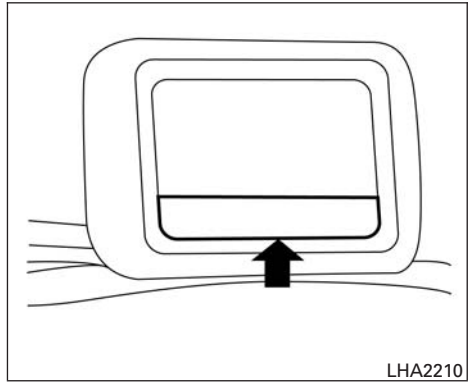
LHA2210

The angle of the rear display screen can be adjusted for optimal viewing.

Gently apply pressure to the base of the screen where indicated until the screen reached the desired position. When the screen is released, it will remain in the current position. To return to the screen to the flat position, press the base of the screen in all the way until it clicks and retracts.

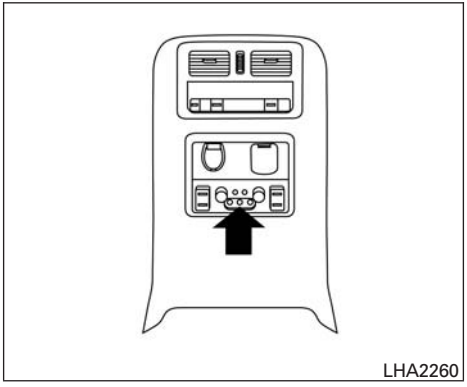

Rear auxiliary input jacks

The rear auxiliary input jacks are located on the inside of the center console. NTSC/PAL compatible devices can be connected to the auxiliary jacks. The images from the connected device can be viewed on the rear displays.

The rear auxiliary jacks are color coded for identification purposes.

- Yellow - video input
- White - left channel audio input
- Red - right channel audio input

Before connecting a device to a jack, turn off the power of the portable device.

To display the rear AUX screen, press the preferred side (L or R) of the AUX (L)/AUX (R) buttons (rear input jacks) on the remote control.

The device connected to the rear auxiliary input jacks cannot be displayed on the front screen.

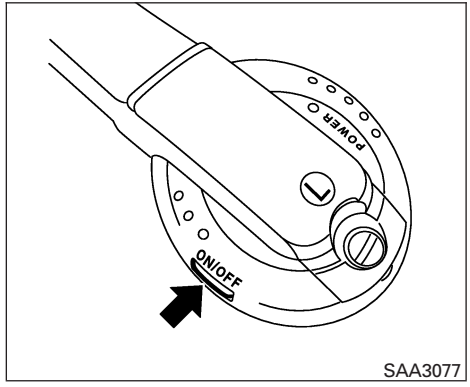

Headphones

The headphones for this system are a wireless type and no cables are necessary. The headphones can only be used in the rear seat.

Power ON/OFF

Press the power ON/OFF button to turn the headphones on or off.

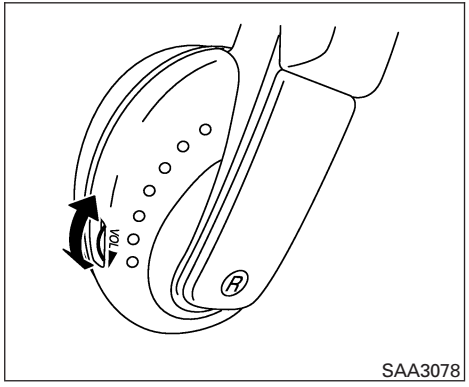

SAA3078

Volume control

Turn the volume control knob to adjust the volume.

The headphones will automatically turn off after about 4 minutes if there is no sound during that period. The headphones will also turn off after approximately 4 hours of continuous use. To prevent the battery from being discharged, keep the power turned off when not in use.

If the sound from the headphones is not clear, it may be due to interference from an infrared communication device or a cellular phone. If this happens, turn down the headphone volume or stop using the headphones.

It is also possible that the headphones may be too far from the transmitter which is in the rear display screen. This is not a malfunction.

The sound may also be interrupted temporarily when there is an obstacle between the headphones and the transmitter. Remove the obstacle, such as opaque materials, hands, hair, etc.

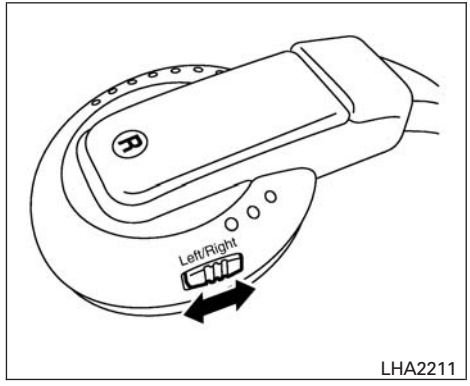

LHA2211

Type A (if so equipped)

Channel change

When the rear displays are playing different sources, slide the channel select switch to select the sound.

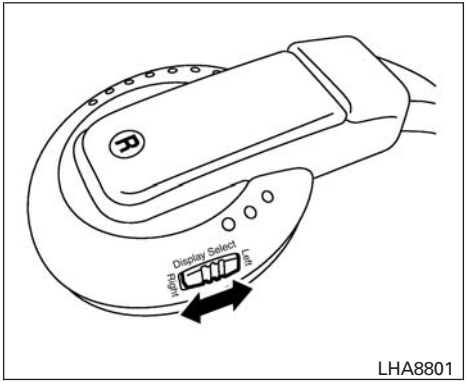

Type B (if so equipped)

"Left" is the sound on the left display. "Right" is the sound on the right display.

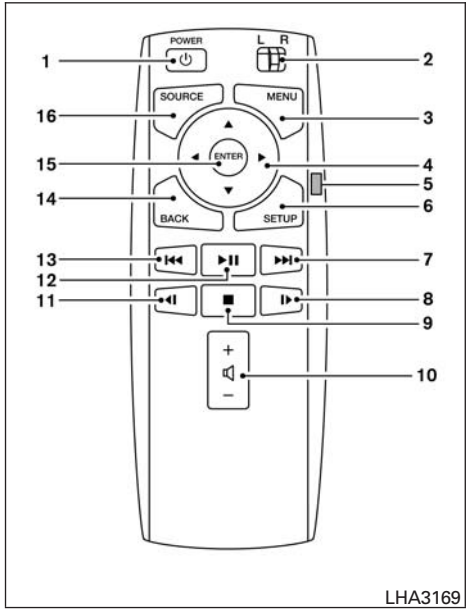

Remote control

The remote control has the following functions:

1. POWER button
2. Display select switch (L or R)
3. MENU button
4. Directional buttons
5. Backlight button
6. SETUP button
7. (next chapter) button
8. (fast forward) button
9. (stop) button
10. Volume control button
11. (reverse) button
12. (play and pause) button
13. (previous chapter) button
14. BACK button
15. ENTER button
16. SOURCE button

Select rear displays audio source

Slide the display select switch on the remote control to the left (L) or right (R) to select each screen source individually.

The SOURCE button on the remote control selects the source for front and rear screens at once.

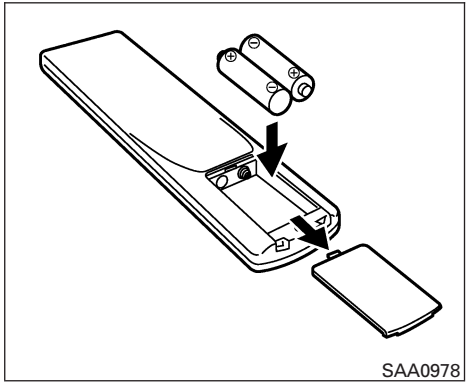

Remote control and headphones battery replacement

⚠ CAUTION

- **An improperly disposed battery can harm the environment. Always confirm local regulations for battery disposal.**
- **When changing batteries, do not let dust or oil get on the components.**

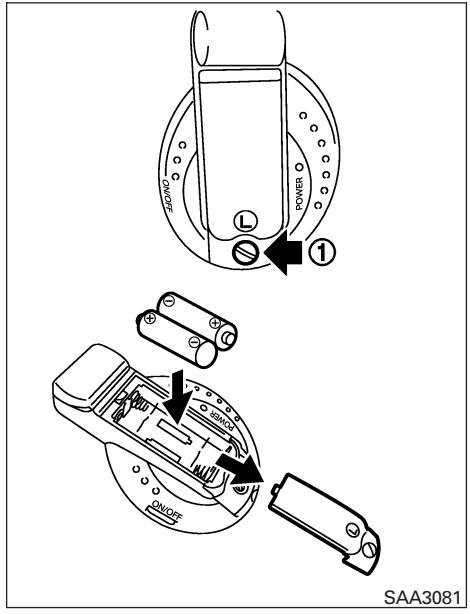

To replace the battery:

1. Open the lid as illustrated.
   - For headphones, remove the screw ① with a flat-bladed screwdriver before removing the lid.
2. Replace both batteries with new ones.
   - Recommended battery:
     Size AA 6 2 (DVD remote control)
     Size AAA 6 2 (headphones)
   - Be careful not to touch the battery terminal.
   - Make sure that the (+) and (-) ends on the batteries match the markings inside the compartment.
3. Close the lid securely.
   - If you will not be using the remote control for long periods of time, remove the batteries.
   - Replacement of the batteries is needed when the remote control only functions at extremely close distances to the Dual Head Restraint/Headrest DVD System or when it does not function at all.

FCC Notice:

Changes or modifications not expressly approved by the party responsible for compliance could void the user's authority to operate the equipment. This device complies with Part 15 of the FCC Rules and RSS-210 of Industry Canada. Operation is subject to the following two conditions: (1) This device may not cause harmful interference, and (2) this device must accept any interference received, including interference that may cause undesired operation of the device.

BEFORE OPERATING DUAL HEAD RESTRAINT/HEADREST DVD SYSTEM

Precautions

Start the engine when using the Dual Head Restraint/Headrest DVD System.

WARNING

The driver must not attempt to operate the Dual Head Restraint/Headrest DVD System or wear the headphones while the vehicle is in motion so that full attention may be given to vehicle operation.

CAUTION

- **Only operate the Dual Head Restraint/Headrest DVD System while the vehicle engine is running. Operating the Dual Head Restraint/Headrest DVD System for extended periods of time with the engine OFF can discharge the vehicle battery.**
- **Do not allow the system to get wet. Excessive moisture such as spilled liquids may cause the system to malfunction.**
- **While playing VIDEO-CD media, this DVD player does not guarantee complete functionality of all VIDEO-CD formats.**

Parental level (parental control)

Video data with the parental control setting can be played with this system. Please use your own judgement to set the parental control with the system.

Disc selection

You can play the following disc formats with the DVD player:

- DVD-VIDEO
- VIDEO-CD
- DTS-CD

Use DVDs with the region code "ALL" or the code applicable to your country. The region code is displayed as a small symbol printed on the top of the DVD. This vehicle-installed DVD player can only play DVDs with an applicable region code.

Available audio sources

The following sources are available to play on each display:

Front display

- Radio
- CD/DVD
- USB memory/iPod®
- Bluetooth® audio
- AUX (front)

Rear display

- DVD
- USB memory with video files
- AUX (front/rear)

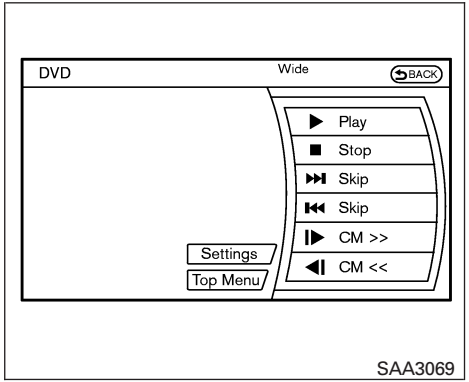

Front display

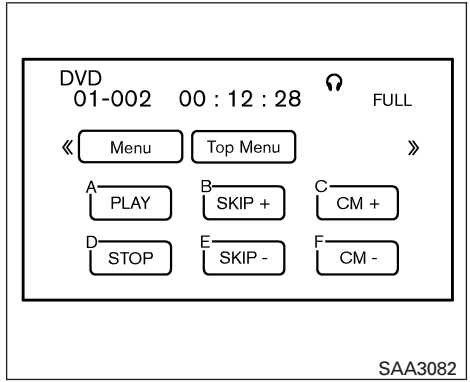

Rear display

PLAYING A DVD (Digital Versatile Disc)

DISC·AUX button

Park the vehicle in a safe location for the front seat occupants to operate the DVD player while watching the images.

Insert a DVD into the CD/DVD slot with the labeled side up. The DVD will be guided automatically into the slot. When ejecting the DVD, press the EJECT button.

Press the AUX·DVD button on the control panel and turn the display to the DVD mode, and begin playing the DVD automatically.

When a DVD is loaded, it will begin playing automatically.

The front screen will be turned on when the AUX·DVD button is pressed while a DVD is being played, and it will turn off automatically after a period of time. To turn it on again, press the AUX·DVD button again.

Adjust front/rear displays

Front display

To adjust the front display mode, press the DISP button on the center multi-function control panel. Follow the instructions displayed on the screen.

Rear display

To adjust the rear display mode, press the preferred side (L or R) of the DISP button on the remote control.

DVD operation keys

To operate the DVD player, select the preferred key displayed on the operation screen using the NISSAN controller.

PAUSE

Select this key and press the ENTER button to pause the DVD. To resume playing the DVD, use the “PLAY” key.

To pause the DVD, it is also possible to push the pause button on the keypad of the remote control.

PLAY

Select this key and press the ENTER button to start playing the DVD, for example, after pausing the DVD.

To start playing the DVD, it is also possible to press the play button on the keypad of the remote control.

STOP

Select this key and press the ENTER button to stop playing the DVD.

To stop playing the DVD, it is also possible to press the stop button on the keypad of the remote control.

SKIP (FORWARD)

Select this key and press the ENTER button to skip the chapter(s) of the disc forward. The chapters will advance the number of times the ENTER button is pressed.

To skip the chapter(s) forward, it is also possible to press the corresponding button on the keypad of the remote control.

SKIP (REWIND)

Select this key and press the ENTER button to skip the chapter(s) of the disc backward. The chapters will go back the number of times the ENTER button is pressed.

To skip the chapter(s) backward, it is also possible to press the corresponding button on the keypad of the remote control.

Commercial Skip

This function is only for DVD-VIDEO and DVD-VR.

Select this key to skip forward or backwards by the set amount as defined in the DVD settings menu.

To skip forward or backward, it is also possible to press the corresponding button on the keypad of the remote control.

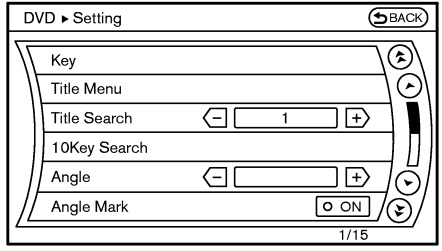

SAA2498

Front screen

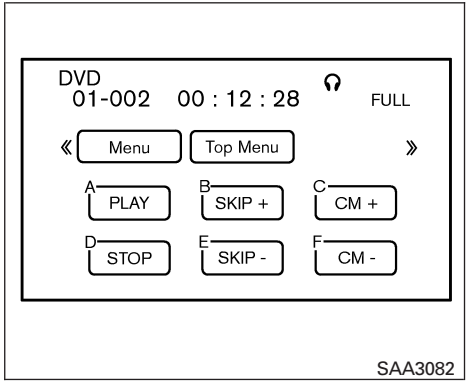

Rear screen

Setting keys

Select the “Settings” key with the NISSAN controller and press the ENTER button to adjust the following settings.

The items indicated with “*” can also be set from the rear display. Press the DVD button on the remote control while a DVD is being played. Select the preferred item using the directional buttons on the remote control and press the ENTER button.

Key (DVD-VIDEO)

Keys for the DVD menu operation are displayed.

Arrow icons: Move the cursor to select a DVD menu.

Enter: Enter the selected menu.

Move: Change the display location by moving the operation key.

Back: Return to the previous screen.

Hide: Hide the operation key.

Title Menu (front)/Menu (rear) (DVD-VIDEO)

Menus specific to each disc will be shown. For additional information, refer to the instructions attached to the disc.

Title Search (DVD-VIDEO)

A scene that belongs to a specified title will be displayed each time the “+” side or “−” side is selected.

10 Key Search (DVD-VIDEO, VIDEO-CD, CDDA)

Select the “10 Key Search” key and press the ENTER button to open the number entry screen.

Input the number you want to search for and select the “OK” key with the NISSAN controller. Then press the ENTER button. The specified Title/Chapter or Group/Track will be played.

Angle (DVD-VIDEO)

If the DVD contains different angles (such as moving images), the current image angle can be switched to another one.

Select the “Angle” key and press the ENTER button. When the “+” side or “−” side is selected, the angle will change.

Angle Mark (DVD-VIDEO)

When this item is turned on, an angle mark will be shown on the bottom of the screen if the scene can be seen from a different angle.

Menu Skip (DVD-VIDEO)

DVD menus are automatically configured and the contents will be played directly when the “Menu Skip” key is turned on. Note that some discs may not be played directly even if this item is turned on.

CM Skip (DVD-VIDEO)

The amount of seconds for CM Skip can be set to 15, 30 or 60 seconds.

DRC (DVD-VIDEO)

DRC (Dynamic Range Compression) allows tuning of the dynamic range of sound recorded in the Dolby Digital format.

DVD Language (DVD-VIDEO, VIDEO-CD)

Select the “DVD Language” key and press the ENTER button to open the number entry screen.

Input the number corresponding to the preferred language and select the “OK” key with the NISSAN controller. Then press the ENTER button. The DVD top menu language will be changed to the one selected.

Display

Adjust the image quality of the screen, select the preferred adjustment items and press the ENTER button.

Audio

Choose the preferred language using the NISSAN controller and press the ENTER button.

Subtitle (DVD-VIDEO)

Choose the preferred language using the NISSAN controller and press the ENTER button.

To turn off the subtitles, press and hold the ENTER button until a beep sounds.

Display Mode (DVD-VIDEO, VIDEO-CD)

Choose from the “Full”, “Wide”, “Normal” or “Cinema” mode using the NISSAN controller and press the ENTER button.

Play Mode

Choose the preferred play mode using the NISSAN controller and press the ENTER button.

Remote control operation

Use the remote control to adjust the following items.

Rear display ON/OFF

The rear displays can be activated or deactivated individually.

To activate or deactivate the rear displays, press the preferred side (L or R) of the ON·OFF button on the remote control.

Joystick

Use the joystick to select the items displayed on the rear screen.

ENTER button

Press the ENTER button to make the selected item complete on the rear screen.

BACK button

Press to go back to the previous screen or cancel the selection.

DVD mode

Press the DVD button to select the DVD mode.

AUX mode

The AUX (auxiliary input jacks) modes can be activated or deactivated individually. To activate the AUX mode, press the preferred side (L or R) of the AUX button. Press the AUX button again to deactivate the AUX mode and display another mode.

Volume

To control the volume level, push the VOL button ⌃ or ⌄ .

Display

Display settings can be set individually for the right and left screens.

Press the preferred side (L or R) of the DISP button to adjust the rear display settings.

Sound

To change the language, press the SOUND button. Each time the button is pressed, the language will change to each language stored in the DVD.

Track/Channel

Press to skip to the previous or next DVD scene selection.

Rear display settings

To adjust the rear display settings, select the preferred key and press the ENTER button. The following settings are available:

Auto display

Touch the auto display key to automatically activate the rear DVD monitors when playing a movie from a DVD or USB drive.

Rear speaker

Touch the rear speaker key to mute and unmute the rear speakers. This allows two different sources to be playing: one through the front speakers and one through the DVD headphones.

Aspect

Select the display size from “CINEMA”, “WIDE”, “FULL” or “NORMAL” using the joystick on the remote control.

Picture Mode

To adjust the display brightness automatically, select the “Brightness” key and then select from “Darker”, “Normal” or “Brighter”. When adjusting manually, select “OFF” and adjust using the joystick on the remote control and tilt the joystick to the right or left.

To adjust tint, color, contrast or black level, select a key using the joystick on the remote control and tilt the joystick to the right or left.

Press the BACK button on the remote control to apply the settings and return to the previous display.

To return the adjustment levels to the default value, select “Execute” next to “Initialization” using the joystick on the remote control and press the ENTER button. The “Execute” key is deactivated when the picture mode settings are already in the default value.

Color System

To choose the color system, select from “NTSC”, “PAL”, “PAL-60”, “PAL-M”, “PAL-N” or “AUTO” using the joystick on the remote control and tilt the joystick to the right or left.

3D Y/C filter

Set to ON/OFF using the directional buttons on the remote control. When turned on, small characters and an outline of the shapes will be displayed more clearly than when turned off.

AUX Volume Setting

To set the AUX volume, select from “High”, “Low” or “Middle” using the joystick on the remote control and tilt the joystick to the right or left.

Rear speaker volume

From the rear display settings screen, the volume on the rear speaker can be toggled ON and OFF.

OPERATING TIPS

- The images from a device that is connected to the rear auxiliary input jacks cannot be viewed on the front displays.
- It is not possible to switch the source to USB (if so equipped) or DVD using the remote control when the rear display is in the AUX mode. Press the AUX (L)/ AUX (R) button in the remote control and turn off the AUX mode, and then push the preferred mode switch.
- It is not possible to display different video files, such as DVD or video files in the USB memory, on the front and rear displays at the same time.
- It is not possible to play an audio file and a video file in the same USB memory at the same time.

Multiple source display

It is possible to play different sources on each display. The following example shows how to operate multiple sources.

1. Display a video file in the front display by selecting the DVD mode.
2. Press the L side on the power ON·OFF button on the remote control. The left rear display comes on and the DVD screen will be displayed.
3. Press the R side on the power ON·OFF button on the remote control. The right rear display comes on and the DVD screen will be displayed.
4. Switch the source on the front display to an audio source. The sound from the speakers switches according to the front display. The rear display continues to display the DVD.
5. Turn on a pair of headphones and listen to the DVD on the rear displays using the headphones.
6. Connect an auxiliary device into the AUX jacks and press the AUX (L)/AUX (R) button on the remote control. The selected side of the rear display turns to the AUX mode. The other rear display continues to display the DVD.
7. Turn on the other pair of headphones. If the sound from the headphones is not from the AUX jacks, switch the channel with the channel select switch on the headphones.

CARE AND MAINTENANCE

Use a lightly dampened, lint free cloth to clean the surfaces of your Dual Head Restraint/Headrest DVD System (DVD player face, screen, remote control, etc.).

⚠ CAUTION

- **Do not use any solvents or cleaning solutions when cleaning the video system.**
- **Do not use excessive force on the monitor screen.**
- **Avoid touching or scratching the monitor screen as it may become dirty or damaged.**
- **Do not attempt to operate the system in extreme temperature conditions [below −4°F (−20°C) and above 158°F (70°C)]**
- **Do not attempt to operate the system in extreme humidity conditions (less than 10% or more than 75%).**

When installing a CB, ham radio or car phone in your vehicle, be sure to observe the following precautions; otherwise, the new equipment may adversely affect the engine control system and other electronic parts.

⚠ WARNING

- **A cellular phone should not be used for any purpose while driving so full attention may be given to vehicle operation. Some jurisdictions prohibit the use of cellular phones while driving.**
- **If you must make a call while your vehicle is in motion, the hands free cellular phone operational mode is highly recommended. Exercise extreme caution at all times so full attention may be given to vehicle operation.**
- **If you are unable to devote full attention to vehicle operation while talking on the phone, pull off the road to a safe location and stop your vehicle.**

CAUTION

- Keep the antenna as far away as possible from the electronic control modules.
- Keep the antenna wire more than 8 in (20 cm) away from the electronic control system harnesses. Do not route the antenna wire next to any harness.
- Adjust the antenna standing-wave ratio as recommended by the manufacturer.
- Connect the ground wire from the CB radio chassis to the body.
- For details, consult a NISSAN dealer.

BLUETOOTH® HANDS-FREE PHONE SYSTEM WITHOUT NAVIGATION SYSTEM (if so equipped)

WARNING

- Use a phone after stopping your vehicle in a safe location. If you have to use a phone while driving, exercise extreme caution at all times so full attention may be given to vehicle operation.
- If you are unable to devote full attention to vehicle operation while talking on the phone, pull off the road to a safe location and stop your vehicle.

CAUTION

To avoid discharging the vehicle battery, use a phone after starting the engine.

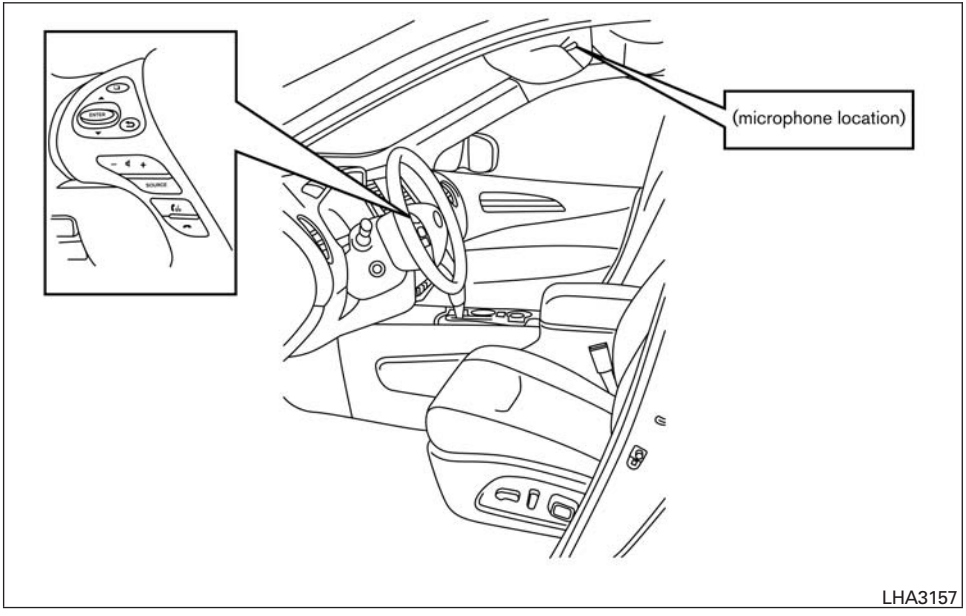

Your NISSAN is equipped with the Bluetooth® Hands-Free Phone System. If you have a compatible Bluetooth® enabled cellular phone, you can set up the wireless connection between your cellular phone and the in-vehicle phone module. With Bluetooth® wireless technology, you can make or receive a hands-free telephone call with your cellular phone in the vehicle.

Once your cellular phone is connected to the in-vehicle phone module, no other phone connecting procedure is required. Your phone is automatically connected with the in-vehicle phone module when the ignition switch is placed in the ON position with the previously connected cellular phone turned on and carried in the vehicle.

NOTE:

Some devices require the user to accept connections to other Bluetooth® devices. If your phone does not connect automatic ally to the system, consult the phone's Owner's Manual for details on device operation.

You can connect up to five different Bluetooth® cellular phones to the in-vehicle phone module. However, you can talk on only one cellular phone at a time.

Before using the Bluetooth® Hands-Free Phone System, refer to the following notes.

- Set up the wireless connection between a compatible cellular phone and the in-vehicle phone module before using the hands-free phone system.
- Some Bluetooth® enabled cellular phones may not be recognized or work properly. Please visit www.nissanusa.com/bluetooth or www.nissan.ca/bluetooth for a recommended phone list and connecting instructions.

- You will not be able to use a hands-free phone under the following conditions:
  - Your vehicle is outside of the cellular service area.
  - Your vehicle is in an area where it is difficult to receive a cellular signal; such as in a tunnel, in an underground parking garage, near a tall building or in a mountainous area.
  - Your cellular phone is locked to prevent it from being dialed.
- When the radio wave condition is not ideal or ambient sound is too loud, it may be difficult to hear the other person's voice during a call.
- Do not place the cellular phone in an area surrounded by metal or far away from the in-vehicle phone module to prevent tone quality degradation and wireless connection disruption.
- While a cellular phone is connected through the Bluetooth® wireless connection, the battery power of the cellular phone may discharge quicker than usual. The Bluetooth® Hands-Free Phone System cannot charge cellular phones.
- If the hands-free phone system seems to be malfunctioning, refer to "Troubleshooting guide" in this section. You can also visit www.nissanusa.com/bluetooth or www.nissan.ca/bluetooth for troubleshooting help.
- Some cellular phones or other devices may cause interference or a buzzing noise to come from the audio system speakers. Storing the device in a different location may reduce or eliminate the noise.
- Refer to the cellular phone Owner's Manual regarding the telephone charges, cellular phone antenna and body, etc.

REGULATORY INFORMATION

FCC Regulatory information

- CAUTION: To maintain compliance with FCC's RF exposure guidelines, use only the supplied antenna. Unauthorized antenna, modification, or attachments could damage the transmitter and may violate FCC regulations.
- Operation is subject to the following two conditions:
  1. This device may not cause interference and
  2. this device must accept any interference, including interference that may cause undesired operation of the device.

IC Regulatory information

- Operation is subject to the following two conditions: (1) this device may not cause interference, and (2) this device must accept any interference, including interference that may cause undesired operation of the device.
- This Class B digital apparatus meets all requirements of the Canadian Interference-Causing Equipment Regulations.

Bluetooth®

BLUETOOTH® is a trademark owned by Bluetooth SIG, Inc. and licensed to Visteon.

USING THE SYSTEM

The NISSAN Voice Recognition system allows hands-free operation of the Bluetooth® Hands-Free Phone System.

If the vehicle is in motion, some commands may not be available so full attention may be given to vehicle operation.

Initialization

When the ignition switch is placed in the ON position, NISSAN Voice Recognition is initialized, which takes a few seconds. If the button is pressed before the initialization completes, the system will announce “Hands-free phone system not ready” and will not react to voice commands.

Operating tips

To get the best performance out of the NISSAN Voice Recognition system, observe the following:

- Keep the interior of the vehicle as quiet as possible. Close the windows to eliminate surrounding noises (traffic noises, vibration sounds, etc.), which may prevent the system from recognizing voice commands correctly.
- Wait until the tone sounds before speaking a command. Otherwise, the command will not be received properly.
- Start speaking a command within 5 seconds after the tone sounds.
- Speak in a natural voice without pausing between words.

Giving voice commands

To operate NISSAN Voice Recognition, press and release the button located on the steering wheel. After the tone sounds, speak a command.

The command given is picked up by the microphone, and voice feedback is given when the command is accepted.

- If you need to hear the available commands for the current menu again, say “Help” and the system will repeat them.
- If a command is not recognized, the system announces, “Command not recognized. Please try again.” Make sure the command is said exactly as prompted by the system and repeat the command in a clear voice.
- If you want to go back to the previous command, you can say “Go back” or “Correction” any time the system is waiting for a response.
- You can cancel a command when the system is waiting for a response by saying, “Cancel” or “Quit.” The system announces “Cancel” and ends the VR session. You can also press and hold the button on the steering wheel for 5 seconds at any time to end the VR session. Whenever the VR session is cancelled, a double beep is played to indicate you have exited the system.
- If you want to adjust the volume of the voice feedback, press the volume control switches (+ or -) on the steering wheel while being provided with feedback. You can also use the radio volume control knob.
- In most cases you can interrupt the voice feedback to speak the next command by pressing the button on the steering wheel.
- To use the system faster, you may speak the second level commands with the main menu command on the main menu. For example, press the button and after the tone say, “Call Redial.”

How to say numbers

NISSAN Voice Recognition requires a certain way to speak numbers in voice commands. Refer to the following rules and examples.

- Either “zero” or “oh” can be used for “0”.

  Example: 1-800-662-6200

  – “One eight oh oh six six two six two oh oh”, or

  – “One eight zero zero six six two six two oh oh”

- Words can be used for the first 4 digits places only.

  Example: 1-800-662-6200

  – “One eight hundred six six two six two oh oh”,

  – NOT “One eight hundred six six two sixty two hundred,” and

  – NOT “One eight oh oh six six two sixty two hundred”

- Numbers can be spoken in small groups. The system will prompt you to continue entering digits, if desired.

  Example: 1-800-662-6200

  – “One eight zero zero”

  The system repeats the numbers and prompts you to enter more.

  – “Six six two”

  The system repeats the numbers and prompts you to enter more.

  – “Six two zero zero”

- Say “pound” for “#”. Say “star” for “*” (available when using the “Special Number” command and the “Send” command during a call).

  For additional information, refer to “List of voice commands” and “Special number” in this section.

  Example: 1-555-1212 *123

  – “One five five five one two one two star one two three”

- Say “plus” for “+” (available only when using the “Special Number” command).

- Say “pause” for a 2-second pause (available only when storing a phonebook number).

NOTE:

For best results, say phone numbers as single digits.

The voice command “Help” is available at any time. Please use the “Help” command to get information on how to use the system.

One Shot Call

To use the system faster, you may speak the second level commands with the main menu command on the main menu. For example, press the button and after the tone say, “Call Redial”.

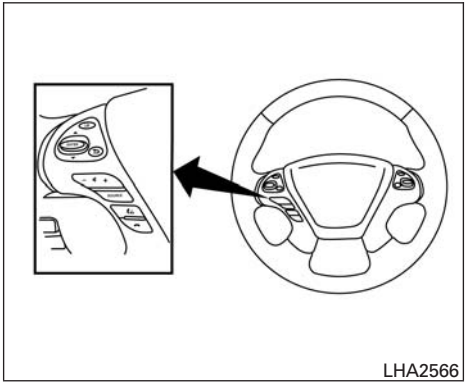

CONTROL BUTTONS

The control buttons for the Bluetooth® Hands-Free Phone System are located on the steering wheel.

PHONE/SEND

Press the button to initiate a VR session or answer an incoming call.

You can also use the button to interrupt the system feedback and give a command at once. For additional information, refer to “List of voice commands” and “During a call” in this section.

PHONE/END

While the voice recognition system is active, press and hold the button for 5 seconds to quit the voice recognition system at any time.

TUNING SWITCH

While using the voice recognition system, tilt the tuning switch up or down to manually control the phone system.

GETTING STARTED

The following procedures will help you get started using the Bluetooth® Hands-Free Phone System with NISSAN Voice Recognition. For additional command options, refer to “List of voice commands” in this section.

Choosing a language

You can interact with the Bluetooth® Hands-Free Phone System using English, Spanish or French.

To change the language, perform the following.

1. Press the SETTING button on the control panel.
2. Select the “Language & Units” key.
3. Select desired language and press ENTER on the control panel.

Connecting procedure

NOTE:

The connecting procedure must be performed when the vehicle is stationary. If the vehicle starts moving during the procedure, the procedure will be cancelled.

Main Menu
“Connect phone” Ⓐ
“Add phone” Ⓑ
Initiate from handset Ⓒ
Name phone Ⓓ

1. Press the button on the steering wheel. The system announces the available commands.
2. Say: “Connect phone” Ⓐ. The system acknowledges the command and announces the next set of available commands.
3. Say: “Add phone” Ⓑ. The system acknowledges the command and asks you to initiate connecting from the phone handset Ⓒ.

   The connecting procedure of the cellular phone varies according to each cellular phone model. For additional information, refer to the cellular phone Owner’s Manual. You can also visit www.nissanusa.com/bluetooth or www.nissan.ca/bluetooth for instructions on connecting NISSAN recommended cellular phones.

   When prompted for a PIN, enter “1234” from the handset. The PIN “1234” has been assigned by NISSAN and cannot be changed.
4. The system asks you to say a name for the phone Ⓓ.

   If the name is too long or too short, the system tells you, then prompts you for a name again.

   Also, if more than one phone is connected and the name sounds too much like a name already used, the system tells you, then prompts you for a name again.

Making a call by entering a phone number

Main Menu
- “Call” Ⓐ
  - “Phone Number” Ⓑ
    - Speak the digits Ⓒ
      - “Dial” Ⓓ

1. Press the button on the steering wheel. A tone will sound.
2. Say: “Call” Ⓐ. The system acknowledges the command and announces the next set of available commands.
3. Say “Phone Number” Ⓑ. The system acknowledges the command and prompts user to select either “(7 or 10 digits)” or “Special Number”. Select desired option to proceed to next step.
4. Say the number you wish to call starting with the area code in single digit format Ⓒ. If the system has trouble recognizing the correct phone number, try entering the number in the following groups: 3-digit area code, 3-digit prefix and the last 4-digits. For example, 555-121-3354 can be said as “five five five” as the 1st group, then “one two one” as the 2nd group, and “three three five four” as the 3rd group. For dialing more than 10 digits or any special characters, say “Special Number”. For additional information, refer to “How to say numbers” in this section.
5. When you have finished speaking the phone number, the system repeats it back and announces the available commands.
6. Say: “Dial” Ⓓ. The system acknowledges the command and makes the call.

For additional information on command options, refer to “List of voice commands” in this section.

Receiving a call

When you hear the ring tone, press the button on the steering wheel.

Once the call has ended, press the button on the steering wheel.

NOTE:

If you do not wish to take the call when you hear the ring tone, press the button on the steering wheel.

For additional information on command options, refer to “List of voice commands” in this section.

LIST OF VOICE COMMANDS

Main Menu
“Call”
“Phonebook”
“Recent Calls”
“Connect Phone”

When you press and release the button on the steering wheel, you can choose from the commands on the Main Menu. The following pages describe these commands and the commands in each sub-menu.

Remember to wait for the tone before speaking.

After the main menu, you can say “Help” to hear the list of commands currently available any time the system is waiting for a response.

If you want to end an action without completing it, you can say “Cancel” or “Quit” at any time the system is waiting for a response. The system will end the VR session. Whenever the VR session is cancelled, a double beep is played to indicate you have exited the system.

If you want to go back to the previous command, you can say “Go back” or “Correction” any time the system is waiting for a response.

“Call”

Main Menu
“Call”
(Speak name) Ⓐ
“Phone Number”
(Speak Digits) Ⓑ
“Special Number” Ⓒ
“Redial” Ⓓ
“Call Back” Ⓔ

(Speak name) Ⓐ

If you have stored entries in the phonebook, you can dial a number associated with a name.

For additional information, refer to “Phonebook (phones without automatic phonebook download function)” in this section to learn how to store entries.

When prompted by the system, say the name of the phone book entry you wish to call. The system acknowledges the name.

If there are multiple numbers associated with the name, the system asks you to choose the correct number.

Once you have confirmed the name and location, the system begins the call.

(Speak Digits) Ⓑ

When prompted by the system, say the number you wish to call. For additional information, refer to “How to say numbers” and “Making a call by entering a phone number” in this section.

“Special Number” Ⓒ

For dialing more than 10 digits or any special characters, say “Special Number”. When the system acknowledges the command, the system will prompt you to speak the number.

“Redial” Ⓓ

Use the Redial command to call the last number that was dialed.

The system acknowledges the command, repeats the number and begins dialing.

If a redial number does not exist, the system announces, “There is no number to redial” and ends the VR session.

“Call Back” Ⓔ

Use the Call Back command to dial the number of the last incoming call within the vehicle.

The system acknowledges the command, repeats the number and begins dialing.

If a call back number does not exist, the system announces, “There is no number to call back” and ends the VR session.

During a call

During a call there are several command options available. Press the button on the steering wheel to mute the receiving voice and enter commands.

- “Help” — The system announces the available commands.
- “Cancel/Quit” — The system announces “Cancel,” ends the VR session and returns to the call.
- “Send” — Use the Send command to enter numbers, “*” or “#” during a call. For example, if you were directed to dial an extension by an automated system:

  Say: “Send one two three four.”

  The system acknowledges the command and sends the tones associated with the numbers. The system then ends the VR session and returns to the call. Say “star” for “*”. Say “pound” for “#”.
- “Transfer call” — Use the Transfer Call command to transfer the call from the Bluetooth® Hands-Free Phone System to the cellular phone when privacy is desired.

  The system announces, “Transfer call. Call transferred to privacy mode.” The system then ends the VR session.

  To reconnect the call from the cellular phone to the Bluetooth® Hands-Free System, press the button.
- “Mute” — Use the Mute command to mute your voice so the other party cannot hear it. Use the mute command again to unmute your voice.

NOTE:

If a call is ended or the cellular phone network connection is lost while the Mute feature is on, the Mute feature will be reset to “off” for the next call so the other party can hear your voice.

“Phonebook” (phones without automatic phonebook download function)

NOTE:

The “Transfer Entry” command is not available when the vehicle is moving.

Main Menu
- “Phonebook”
  - “Transfer Entry” Ⓐ
  - “Delete Entry” Ⓑ
  - “List Names” Ⓒ

For phones that do not support automatic download of the phonebook (PBAP Bluetooth® profile), the “Phonebook” command is used to manually add entries to the vehicle phonebook.

The phonebook stores up to 40 names for each phone connected to the system.

NOTE:

Each phone has its own separate phonebook. You cannot access Phone A’s phonebook if you are currently connected with Phone B.

“Transfer Entry” Ⓐ

Use the Transfer Entry command to store a new name in the system.

When prompted by the system, say the name you would like to give the new entry.

For example, say: “Mary.”

If the name is too long or too short, the system tells you, then prompts you for a name again.

Also, if the name sounds too much like a name already stored, the system tells you, then prompts you for a name again.

The system will ask you to transfer a phone number stored in the cellular phone’s memory.

Enter a phone number by voice command:

For example, say: “five five five one two one two.” For additional information, refer to “How to say numbers” in this section.

To transfer a phone number stored in the cellular phone’s memory:

Say “Transfer entry.” The system acknowledges the command and asks you to initiate the transfer from the phone handset. The new contact phone number will be transferred from the cellular phone via the Bluetooth® communication link.

The transfer procedure varies according to each cellular phone. For additional information, refer to the cellular phone Owner’s Manual.

The system repeats the number and prompts you for the next command. When you have finished entering numbers or transferring an entry, choose “Store.”

The system confirms the name, location and number.

“Delete Entry” Ⓑ

Use the Delete Entry command to erase one entry from the phonebook. After the system recognizes the command, speak the name to delete or say “List Names” to choose an entry.

“List Names” Ⓒ

Use the List Names command to hear all the names in the phonebook.

The system recites the phonebook entries but does not include the actual phone numbers. When the playback of the list is complete, the system goes back to the main menu.

You can stop the playback of the list at any time by pressing the button on the steering wheel. The system ends the VR session.

“Phonebook” (phones with automatic phonebook download function)

NOTE:

The “Transfer Entry” command is not available when the vehicle is moving.

Main Menu
- “Phonebook”
  - Say a Name
  - “List Names” Ⓐ
  - “Record (A Name)” Ⓑ

For phones that support automatic download of the phonebook (PBAP Bluetooth® profile), the “Phonebook” command is used to manage entries in the vehicle phonebook. You can say the name of an entry at this menu to initiate dialing of that entry.

The phonebook stores up to 1,000 names for each phone connected to the system.

When a phone is connected to the system, the phonebook is automatically downloaded to the vehicle. This feature allows you to access your phonebook from the Bluetooth® system and call contacts by name. You can record a custom voice tag for contact names that the system has

difficulty recognizing. For additional information, refer to “Record Name” in this section.

NOTE:

Each phone has its own separate phonebook. You cannot access Phone A’s phonebook if you are currently connected with Phone B.

“List Names” Ⓐ

Use the List Names command to hear all the names and locations in the phonebook.

The system recites the phonebook entries but does not include the actual phone numbers. When the playback of the list is complete, the system goes back to the main menu.

You can stop the playback of the list at any time by pressing the button on the steering wheel. The system ends the VR session. For additional information about recording custom voice tags for list entries that the system has difficulty pronouncing, refer to “Record name” command in this section.

“Record Name” Ⓑ

The system allows you to record custom voice tags for contact names in the phonebook that the vehicle has difficulty recognizing. This feature can also be used to record voice tags to directly dial an entry with multiple numbers. Up to 40 voice tags can be recorded to the system.

“Recent Calls”

Main Menu
- “Recent Calls”
  - “Outgoing” Ⓐ
  - “Incoming” Ⓑ
  - “Missed” Ⓒ
  - “Call Back” Ⓓ
  - “Redial” Ⓔ

Use the Recent Calls command to access outgoing, incoming, missed calls and to call back the last incoming call or to redial the last outgoing call.

“Incoming” Ⓑ

Use the Incoming command to list the incoming calls made to the vehicle.

“Missed” Ⓒ

Use the Missed command to list the calls made to the vehicle that were not answered.

“Outgoing” Ⓐ

Use the Outgoing command to list the outgoing calls made from the vehicle.

“Call Back” Ⓓ

Use the Call Back command to dial the number of the last incoming call to the vehicle.

“Redial” Ⓔ

Use the Redial command to dial the number of the last outgoing call from the vehicle.

“Connect Phone”

NOTE:

The Add Phone command is not available when the vehicle is moving.

Main Menu
- “Connect Phone”
  - “Add Phone” Ⓐ
  - “Select Phone” Ⓑ
  - “Delete Phone” Ⓒ
  - “Turn Bluetooth OFF” Ⓓ
  - “Replace Phone” Ⓔ

Use the Connect Phone commands to manage the phones connecting to the vehicle or to enable the Bluetooth® function on the vehicle.

“Add Phone” Ⓐ

Use the Add Phone command to add a phone to the vehicle. For additional information, refer to “Connecting procedure” in this section.

“Select Phone” Ⓑ

Use the Select Phone command to select from a list of phones connected to the vehicle. The system will list the names assigned to each phone and then prompt you for the phone you wish to select. Only one phone can be active at a time.

“Delete Phone” Ⓒ

Use the Delete Phone command to delete a phone that is connected to the vehicle. The system will list the names assigned to each phone and then prompt you for the phone you wish to delete. Deleting a phone from the vehicle will also delete the phonebook for that phone.

“Turn Bluetooth OFF” Ⓓ

Use the Turn Bluetooth OFF command to prevent a wireless connection to your phone.

“Replace Phone” Ⓔ

Use the Replace Phone command to replace an existing phone pairing with a new phone. The system will keep all voice tags assigned to your phonebook.

VOICE ADAPTATION (VA) MODE

Voice Adaptation allows up to two out-of-dialect users to train the system to improve recognition accuracy. By repeating a number of commands, the users can create a voice model of their own voice that is stored in the system. The system is capable of storing a different voice adaptation model for each connected phone.

Training procedure

The procedure for training a voice is as follows.

1. Position the vehicle in a reasonably quiet outdoor location.
2. Sit in the driver’s seat with the engine running, the parking brake on, and the transmission in P (Park).
3. Press and hold the button for approximately 5 seconds.
4. The system announces: “Press the PHONE/SEND ( ) button for the hands-free phone system to enter the voice adaptation mode or press the PHONE/END ( ) button to select a different language.”
5. Press the button.

   For additional information on selecting a different language, refer to “Choosing a language” in this section.
6. Voice memory A or memory B is selected automatically. If both memory locations are already in use, the system will prompt you to overwrite one. Follow the instructions provided by the system.
7. When preparation is complete and you are ready to begin, press the button.
8. The VA mode will be explained. Follow the instructions provided by the system.
9. When training is finished, the system will tell you an adequate number of phrases have been recorded.
10. The system will announce that voice adaptation has been completed and the system is ready.

The VA mode will stop if:

- The button is pressed for approximately 5 seconds in VA mode.

- The vehicle begins moving during VA mode.
- The ignition switch is placed in the OFF or LOCK position.

Training phrases

During the VA mode, the system instructs the trainer to say the following phrases. The system will prompt you for each phrase.

- phonebook transfer entry
- dial three oh four two nine
- delete call back number
- incoming
- transfer entry
- eight pause nine three two pause seven
- delete all entries
- call seven two four zero nine
- phonebook delete entry
- next entry
- dial star two one seven oh
- yes
- no
- select
- missed
- dial eight five six nine two
- Bluetooth on
- outgoing
- call three one nine oh two
- nine seven pause pause three oh eight
- cancel
- call back number
- call star two zero nine five
- delete phone
- dial eight three zero five one
- record name
- four three pause two nine pause zero
- delete redial number
- phonebook list names
- call eight oh five four one
- correction
- connect phone
- dial seven four oh one eight
- previous entry
- delete
- dial nine seven two six six
- call seven six three oh one
- go back
- call five six two eight zero
- dial six six four three seven

MANUAL CONTROL

While using the voice recognition system, it is possible to select menu options by using the steering wheel controls instead of speaking voice commands. This can be especially helpful if the noise of driving makes it difficult for the voice recognition system to accurately interpret commands. The manual control mode does not allow dialing a phone number by digits. The user may select an entry from the Phonebook or Recent Calls lists. To re-activate voice recognition, exit the manual control mode by pressing and holding the PHONE/END ( ) button. At that time, pressing the PHONE/SEND ( ) button will start the Hands Free Phone System.

Operating tips

- To enter manual control mode, start the voice recognition system and tilt the tuning (▲▼) switch up or down. The system will speak "Showing Manual Options" when manual controls are initially activated.
- To browse the menu options, tilt the tuning (▲▼) switch up or down. The system will always speak the current menu option. Depending on the audio display, it will also show the current menu option.
- To select the current menu option, press the PHONE/SEND ( ) button.
- To go back to the previous menu, press the PHONE/END ( ) button. If the current menu is the main menu, pressing the PHONE/END ( ) button will exit the phone system.
- To exit the manual control mode, press and hold the PHONE/END ( ) button for 5 seconds.

TROUBLESHOOTING GUIDE

The system should respond correctly to all voice commands without difficulty. If problems are encountered, try the following solutions.

Where the solutions are listed by number, try each solution in turn, starting with number 1, until the problem is resolved.

Symptom	Solution
System fails to interpret the command correctly.	1. Ensure that the command is valid. For additional information, refer to “List of voice commands” in this section.
	2. Ensure that the command is spoken after the tone.
	3. Speak clearly without pausing between words and at a level appropriate to the ambient noise level in the vehicle.
	4. Ensure that the ambient noise level is not excessive (for example, windows open or defroster on). NOTE: If it is too noisy to use the phone, it is likely that the voice commands will not be recognized.
	5. If more than one command was said at a time, try saying the commands separately.
	6. If the system consistently fails to recognize commands, the voice training procedure should be carried out to improve the recognition response for the speaker. For additional information, refer to “Voice Adaptation (VA) mode” in this section.
The system consistently selects the wrong entry from the phone book.	1. Ensure that the phone book entry name requested matches what was originally stored. This can be confirmed by using the “List Names” command. For additional information, refer to “Phonebook” in this section.
	2. Replace one of the names being confused with a new name.

BLUETOOTH® HANDS-FREE PHONE SYSTEM WITH NAVIGATION SYSTEM (if so equipped)

⚠ WARNING

- **Use a phone after stopping your vehicle in a safe location. If you have to use a phone while driving, exercise extreme caution at all times so full attention may be given to vehicle operation.**
- **If you are unable to devote full attention to vehicle operation while talking on the phone, pull off the road to a safe location and stop your vehicle.**

⚠ CAUTION

To avoid discharging the vehicle battery, use a phone after starting the engine.

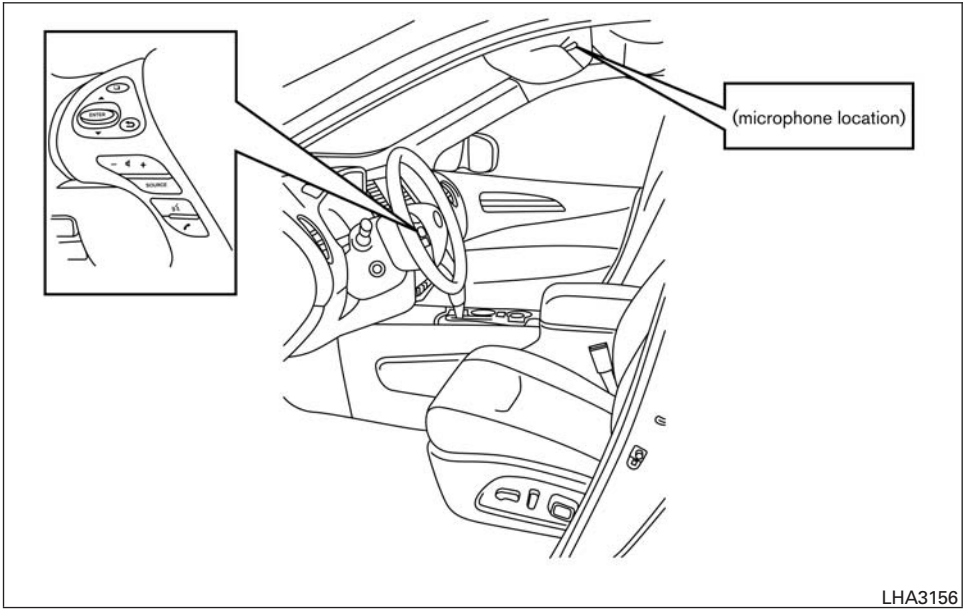

LHA3156

Your NISSAN is equipped with the Bluetooth® Hands-Free Phone System. If you have a compatible Bluetooth® enabled cellular phone, you can set up the wireless connection between your cellular phone and the in-vehicle phone module. With Bluetooth® wireless technology, you can make or receive a hands-free telephone call with your cellular phone in the vehicle.

Once your cellular phone is connected to the in-vehicle phone module, no other phone connecting procedure is required. Your phone is automatically connected with the in-vehicle

phone module when the ignition switch is placed in the ON position with the connected cellular phone turned on and carried in the vehicle.

You can register up to five different Bluetooth® cellular phones to the in-vehicle phone module. However, you can talk on only one cellular phone at a time.

NISSAN Voice Recognition system supports the phone commands, so dialing a phone number using your voice is possible. For additional information, refer to "NISSAN Voice Recognition System" in this section.

Before using the Bluetooth® Hands-Free Phone System, refer to the following notes.

- Set up the wireless connection between a cellular phone and the in-vehicle phone module before using the hands-free phone system.
- Some Bluetooth® enabled cellular phones may not be recognized by the in-vehicle phone module. Please visit www.nissanusa.com/bluetooth or www.nissan.ca/bluetooth for a recommended phone list and connecting.
- You will not be able to use a hands-free phone under the following conditions:
  - Your vehicle is outside of the cellular service area.
  - Your vehicle is in an area where it is difficult to receive cellular signal; such as in a tunnel, in an underground parking garage, near a tall building or in a mountainous area.
  - Your cellular phone is locked to prevent it from being dialed.
- When the radio wave condition is not ideal or ambient sound is too loud, it may be difficult to hear the other person's voice during a call.
- Immediately after the ignition switch is placed in the ON position, it may be impossible to receive a call for a short period of time.
- Do not place the cellular phone in an area surrounded by metal or far away from the in-vehicle phone module to prevent tone quality degradation and wireless connection disruption.
- While a cellular phone is connected through the Bluetooth® wireless connection, the battery power of the cellular phone may discharge quicker than usual. The Bluetooth® Hands-Free Phone System cannot charge cellular phones.
- If the hands-free phone system seems to be malfunctioning, refer to "Troubleshooting guide" in this section. You can also visit www.nissanusa.com/bluetooth or www.nissan.ca/bluetooth for troubleshooting help.
- Some cellular phones or other devices may cause interference or a buzzing noise to come from the audio system speakers. Storing the device in a different location may reduce or eliminate the noise.
- Refer to the cellular phone owner's manual regarding the telephone charges, cellular phone antenna and body, etc.
- The signal strength display on the monitor will not coincide with the signal strength display of some cellular phones.
- If reception between callers is unclear, adjusting the incoming or outgoing call volume may improve the clarity. For additional information, refer to "Call volume" in this section.

REGULATORY INFORMATION

FCC Regulatory information

- CAUTION: To maintain compliance with FCC's RF exposure guidelines, use only the supplied antenna. Unauthorized antenna, modification, or attachments could damage the transmitter and may violate FCC regulations.
- Operation is subject to the following two conditions:
  1. This device may not cause interference and
  2. this device must accept any interference, including interference that may cause undesired operation of the device.

IC Regulatory information

- Operation is subject to the following two conditions: (1) this device may not cause interference, and (2) this device must accept any interference, including interference that may cause undesired operation of the device.
- This Class B digital apparatus meets all requirements of the Canadian Interference-Causing Equipment Regulations.

BLUETOOTH® is a trademark owned by Bluetooth SIG, Inc. and licensed to Clarion.

VOICE COMMANDS

You can use voice commands to operate various Bluetooth® Hands-Free Phone System features using the NISSAN Voice Recognition system. For additional information, refer to "NISSAN Voice Recognition System" in this section.

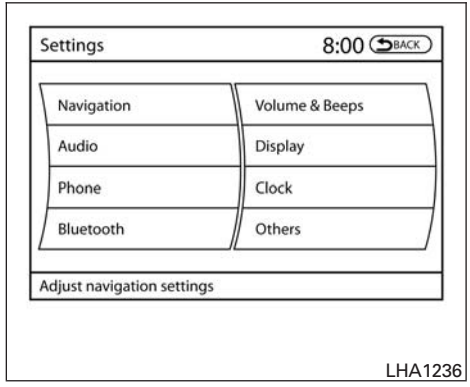

CONNECTING PROCEDURE

Press the SETTING button on the control panel, then touch the “Bluetooth” key on the display.

Menu Item			Result
Bluetooth ON/OFF			Allows user to switch Bluetooth on and off. Bluetooth must be on in order to connect device.
	ON		Turns Bluetooth on.
	OFF		Turns Bluetooth off.
Connect Bluetooth			Upon pressing this button, a popup box will appear on the screen, prompting you to confirm that the connection is for the phone system. Select the ″Yes″ key.
	Yes		Confirms that you are connecting a Bluetooth device. Upon pressing this button, the following message will appear on screen: ″The system is searching for your phone. Using your handset, look for a Bluetooth device called MY-CAR. When requested by the handset, enter the PIN 1234. Exiting screen cancels search.″ The connecting procedure varies by phone. For additional information, refer to the phone Owner’s Manual. When the connecting is complete, the screen will return to the Bluetooth settings screen.
		Cancel	Cancels operation.
	No		Indicates to the system that you are connecting a Bluetooth enabled audio device.
	Cancel		Cancels operation.

VEHICLE PHONEBOOK

This vehicle has two phonebooks available for your use. Depending on your phone, the system may automatically download your entire cell phone's phonebook into the "Handset Phonebook". For additional information on downloading your phonebook, refer to "Handset Phonebook" in this section. If your phonebook does not automatically download, you may set up the vehicle phonebook with up to 40 entries. This phonebook allows you to record a name to speak while using voice recognition.

Press the button on the steering wheel and then touch the "Vehicle Phonebook" key. Touch the "Add New" key at the top of the screen. This will allow the user to add new phonebook content via the methods listed below:

Menu Item			Result
Copy from Call History			The system will show a list of your incoming, outgoing, or missed calls that were downloaded from your cell phone (depending on your phone's compatibility). You may select one of these entries to save in the vehicle phonebook.
Copy from the Handset			The system will show your cell phone's phonebook that was downloaded (depending on your phone's compatibility). You may select one of these entries to save in the vehicle phonebook.
Enter Number by Keypad			Allows manual entry of phonebook contacts
	Ok		Saves the phonebook entry and then will show a screen that is ready to call the number. Press the BACK button to return to the Vehicle Phonebook
	Entry #		Allows user to choose the entry number
	Name		Allows user to enter the contact name
	Number		Allows user to enter the contact number
	Type		Allows user to choose a type from the icon list
	Voicetag		Select the "Voicetag" key to record a name to speak when using the Voice Recognition system
		Store	Select the "Store" key and prepare to speak the name after the tone
		OK	When the voicetag is successfully saved, select the "OK" key to save the phonebook entry

Press the button on the steering wheel and then select the "Vehicle Phonebook" key. Next, select the desired entry from the displayed list. Select the "Edit" key.

Menu Item	Result
Entry #	Changes the displayed number of the selected entry
Name	Edit the name of the entry using the keypad displayed on the screen
Number	Edit the phone number using the keypad displayed on the screen
Type	Select the icon from the icon list
Voicetag	Confirm and store the voicetag. Voicetags allow easy dialing using the NISSAN Voice Recognition System. For additional information, refer to "NISSAN Voice Recognition System" in this section.

HANDSET PHONEBOOK

Many phones will support an automatic download of the cellular phone's phonebook. Since this method allows for up to 1,000 numbers to be stored and entries are automatically assigned voice tags by the system, this is a useful function for easy dialing supported by the Voice Recognition system.

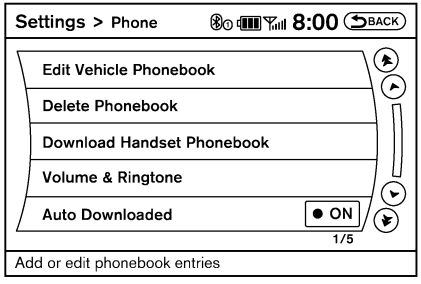

LHA1319

Transferring the handset phonebook

If your cellular phone supports automatic downloading, the system transfers the handset phonebook automatically by default. To ensure that this feature is activated, press the SETTING button on the instrument panel and touch the "Phone" key. The "Auto Downloaded" selection should have the amber indicator next to the word ON activated. Touch the "Auto Downloaded" key to toggle this feature on or off.

To transfer the handset phonebook to the vehicle manually, follow these steps:

1. Press the SETTING button on the control panel.
2. Touch the "Phone" key.
3. Touch the "Download Handset Phonebook" key.

Once the handset phonebook is transferred to the vehicle, it can be accessed by pressing the PHONE key on the instrument panel or the button on the steering wheel, then touching the "Handset Phonebook" key.

Whether the handset phonebook is transferred manually or automatically, the process can take up to 5 minutes to complete, depending on the size of the handset phonebook. For additional information, refer to the cellular phone's owner's manual.

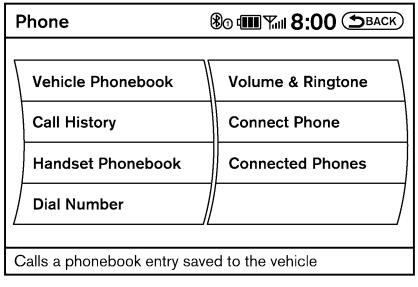

LHA1322

MAKING A CALL

Press the button on the steering wheel. The "Phone" screen will appear on the display. Select one of the following options to make a call:

Menu Item	Result
Vehicle Phonebook	Select the name from an entry stored in the vehicle phonebook. Dialing commences immediately.
Call History	Select the name from the incoming or outgoing call history. Dialing commences immediately.
Handset Phonebook	Select the name from an entry stored in the handset phonebook. Dialing commences immediately.
Dial Number	Input the phone number manually using the keypad on the screen. It will be necessary to select "OK" when finished for dialing to commence. For additional information on using the touch-screen, refer to "How to use the touch-screen" in this section.

RECEIVING A CALL

When you hear a phone ring, the display will change to phone mode. To receive a call, follow one of the procedures listed below:

Menu Item	Result
Press the button on the steering wheel	Accept an incoming call to talk.
"Answer" key on the display	Accept an incoming call to talk.
"Hold Call" key on the display	Put an incoming call on hold.
"Reject Call" key on the display	Reject an incoming call.

DURING A CALL

There are some options available during a call. Select one of the following displayed on the screen, if necessary:

Menu Item		Result
Hang Up		Finish the call. If pressed while another caller is on hold, current call will be ended and user will be able to speak to the caller that was previously on hold.
Use Handset		Transfer the call to the cellular phone.
Mute		Mute your voice to the person.
	Cancel Mute	This will appear after the "Mute" key is selected. Mute will be cancelled.
Keypad		Brings up a keypad. Enter digits when needed. For example, entering your PIN number for voicemail.
	Note	Press the button during a call to send numbers and digits using Voice Recognition.
Switch Call		Select this option to answer another incoming call (function may not be available depending on the model of the phone).

ENDING A CALL

To finish the call, perform one of the following procedures:

Menu Item	Result
"Hang up" key on the "Call in Progress" Display	Finish the call.
button on the steering wheel	Finish the call.

PHONE SETTINGS

To set up the Bluetooth® Hands-Free Phone System to your preferred settings, press the SETTING button on the control panel and touch the "Phone" key on the display.

Menu Item		Result
Edit Vehicle Phonebook		For additional information on adding, editing, and deleting contacts in the vehicle phonebook, refer to "Vehicle Phonebook" in this section.
Delete Phonebook		Delete a phonebook stored on the system.
Download Handset Phonebook		For additional information on adding, editing, and deleting contacts in the handset phonebook, refer to "Handset Phonebook" in this section.
Volume and Ringtone		Adjust the volume level of the ringtone, incoming call sound and outgoing call sound.
	Automatic Hold	When this option is turned on, an incoming call will be placed on hold automatically after several rings.
	Vehicle Ringtone	When this option is turned on, a specific ringtone that is different than the cellular phone's will sound when receiving a call.
Auto Downloaded		For additional information about automatically downloading the handset phonebook, refer to "Handset Phonebook" in this section.

BLUETOOTH® SETTINGS

To set up the Bluetooth® Hands-Free Phone System to your preferred settings, press the SETTING button on the control panel and touch the "Bluetooth" key on the display.

Menu Item	Result
Bluetooth	Turn the Bluetooth® system on or off.
Connect Bluetooth	For additional information about connecting a phone, refer to "Connecting Procedure" in this section.
Connected Devices	Display a list of the Bluetooth® devices connected to the system.
Edit Bluetooth Info	Check information about the device name, device address, and device PIN.
Replace Connected Phone	Replace the phone currently connected to the system. This option allows you to keep any voice tags that were recorded using the previous phone.

CALL VOLUME

Adjusting the incoming or outgoing call volume may improve clarity if reception between callers is unclear. To access the volume settings, press the SETTING button, then touch "Volume and Beeps". You can also adjust the volume of an incoming voice during a call by pushing the volume control switch on the steering wheel or by turning the volume control knob on the control panel:

Menu Item	Result
Ringtone	Adjusting this setting allows ringer volume to be set at a desired level.
Incoming Call	Adjusting this setting allows *you* to hear a difference in volume (You can also adjust the volume of an incoming voice during a call by pushing the volume control switch on the steering wheel or by turning the volume control knob).
Outgoing Call	Adjusting this setting allows *the person you are talking with* to hear a difference in volume.

NISSAN VOICE RECOGNITION SYSTEM (if so equipped)

NISSAN Voice Recognition allows hands-free operation of the systems equipped on this vehicle, such as phone and vehicle information.

There are two voice recognition modes of operation available. They are:

- Standard Mode
- Alternate Command Mode

In Standard Mode (the factory default setting), commands that are available are always shown on the display and announced by the system. You can complete your desired operation by simply following the prompts given by the system. Not all NISSAN Voice Recognition options are available while in Standard Mode.

For advanced operation, you can change to an Alternate Command Mode that enables the operation of the display and audio system through NISSAN Voice Recognition. When this mode is active, an expanded list of commands can be spoken after pressing the button on the steering wheel, and the voice command menu prompts are turned off.

In Alternate Command Mode the recognition success rate may be affected because the number of available commands and the ways of speaking each command are increased. For additional information, refer to “NISSAN Voice Recognition Alternate Command Mode” in this section.

To improve the recognition success rate when Alternate Command Mode is active, try using the Speaker Adaptation Function available in that mode. For additional information, refer to “Speaker Adaptation Function” in this section. Otherwise, it is recommended that Alternate Command Mode be turned off and Standard Mode be used for the best recognition performance.

While using the NISSAN Voice Recognition system for certain Phone and Navigation features, you can switch to using manual controls (touchscreen, NISSAN controller, steering wheel controls) and the information you have already entered by voice control will be retained. To switch to manual controls, touch the “Manual Controls” key on the display when it appears. The system will respond by speaking “Changing to manual operation. Please use manual controls to continue.”

For the voice commands for the navigation system, refer to the Navigation System Owner’s Manual of your vehicle.

For vehicles in the U.S., the factory default setting is the Standard Mode. For additional information, refer to “NISSAN Voice Recognition Standard Mode” in this section. For vehicles in Canada, the factory default setting is the Alternate Command Mode. For additional information, refer to “Alternate Command Mode” in this section.

NISSAN VOICE RECOGNITION STANDARD MODE

The Standard Mode enables control of navigation, phone and vehicle information. With this setting active, commands that are available are always shown on the display and announced by the system.

Displaying user guide

If you use the NISSAN Voice Recognition system for the first time or you do not know how to operate it, you can display the User Guide for confirmation.

You can confirm how to use voice commands by accessing a simplified User Guide, which contains basic instructions and tutorials for several voice commands.

1. Press the INFO button on the control panel.
2. Touch the “Voice Recognition” key.
3. Touch the “User Guide” key.
4. Select an item.

NOTE:

You can skip steps 1 to 3 by pressing the button and saying "Help" followed by "User Guide".

Menu Item		Result
Getting Started		The following message will appear: "With voice recognition, you can use voice commands to control navigation, audio, phone, and other functions. To start the voice recognition system, push the TALK switch on the steering wheel, then say a command after the tone."
Let's Practice		Initiates a practice session that demonstrates how to improve voice recognition by the system. The system will prompt you to say a phone number. After you say the number, the system will provide feedback to improve voice recognition. When you are ready, push the TALK switch.
	Try again	Allows user to repeat the session if improvement is needed.
	Done	Completes practice session and returns user to the User Guide screen.
Using the Address Book		Initiates tutorial for using the Address Book.
Finding a Street Address		Initiates a tutorial for finding a street address.
Placing Calls		Initiates tutorial for making a phone call by voice command operation.
Help on Speaking		Displays useful tips of speaking for correct command recognition by the system: "Say commands when there are minimal background sounds; Say voice commands clearly; Avoid talking slow or with long pauses; Say commands after the tone."

Voice recognition settings

The available settings of the NISSAN Voice Recognition system are described.

1. Press the SETTING button on the control panel
2. Touch “Others” key
3. Touch the “Voice Recognition” key

You can confirm the page by scrolling the screen using the NISSAN controller.

Menu Item	Result
Command List	When Alternate Command Mode is activated, this key will allow user to access the list of Phone, Navigation, Information, Audio, and Help commands.
User Guide	Allows user access to user guide settings. For additional information, refer to “Displaying User Guide” in this section.
Speaker Adaptation	When Alternate Command Mode is activated, this key will allow user to initiate a system function for better voice recognition performance. For additional information, refer to “Speaker Adaptation Function” in this section.
Alternate Command Mode	Allows user to activate Alternate Command Mode. A screen will appear prompting user to review the expanded command list and advises that some command will be replaced and voice menu prompts turned off. User will have to confirm by pressing “OK” to proceed with activation.
Minimize Voice Feedback	When Alternate Command Mode is activated, this key will allow user to reduce system voice feedback during voice recognition session.

USING THE SYSTEM

Initialization

When the ignition switch is placed in the ON position, NISSAN Voice Recognition is initialized, which takes a few seconds. When completed, the system is ready to accept voice commands. If the switch is pressed before the initialization completes, voice commands will not be accepted. Please wait until the NISSAN Voice Recognition initialization is completed.

BEFORE STARTING

To get the best recognition performance from Voice Recognition, observe the following:

- The interior of the vehicle should be as quiet as possible. Close the windows to eliminate the surrounding noises (traffic noise and vibration sounds, etc.), which may prevent the system from correctly recognizing the voice commands.
- Wait until the tone sounds before speaking a command.
- Speak in a natural conversational voice without pausing between words.
- If the air conditioner is set to “Auto”, the fan speed is automatically lowered so that your commands can be recognized more easily.

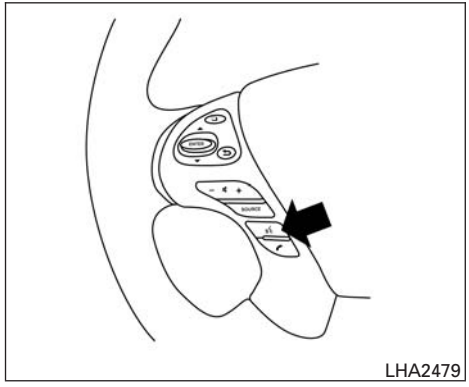

GIVING VOICE COMMANDS

1. Press the switch located on the steering wheel.
2. A list of commands appears on the screen, and you will hear a prompt.
3. After the tone sounds and the icon on the screen changes from to , speak a command.
4. Continue to follow the voice menu prompts and speak after the tone sounds until your desired operation is completed.

Operating tips

- Say a command after the tone. Voice commands cannot be accepted when the icon is .
- Commands that are available are always shown on the display and spoken through voice menu prompts. Commands other than those that are displayed are not accepted. Please follow the prompts given by the system.
- If the command is not recognized, the system repeats the announcement. Repeat the command in a clear voice.
- Say “Back” when prompted to return to the previous screen.
- If you want to cancel the command, press and hold the switch. The message, “Voice recognition is cancelled” will be displayed.
- If you want to adjust the volume of the system feedback, push the SETTING button on the control panel then touche the “Volume & Beeps” key on the touch-screen. Use the “+” and “-” keys to adjust the guidance volume to the desired level.

How to speak numbers

Voice Recognition requires a certain way to speak numbers when giving voice commands. Refer to the following examples.

General rule

- Only single digits 0 (zero) to 9 can be used.
- When saying the phone number 800-662-6200, the system will accept “eight-hundred” in addition to “eight zero zero” or “eight oh oh”. 500, 700, and 900 are also supported.

Examples

- 1-800-662-6200
  - “One eight zero zero six six two six two zero zero”
  - “One eight hundred six six two six two zero zero”

Improving Recognition of Phone numbers

You can improve the recognition of phone numbers by saying the phone number in three groups of numbers. For example, when you try to call 800-662-6200, say “eight zero zero” first, and the system will then ask you for the next 3 digits. Then, say “six six two”. After recognition, the system will then ask for the last 4 digits. Say, “six two zero zero”. Using this method of phone digit entry can improve recognition performance.

NOTE:

When speaking a house number, speak the number “0” as “zero” or “oh”. If the letter “O” is included in the house number, it will not be recognized as “0” even if you speak “oh” instead of “zero”.

Standard Mode command list

Category Commands

COMMAND	ACTION
Phone	Displays Phone function commands.
Navigation	Displays Navigation function commands.
Information	Displays Vehicle Information.
Audio	Displays Audio commands.
Call (name)	Makes a call to a contact that is stored in either phonebook. Please say “Call” followed by a stored name.
Help	Displays user guide (this command is not displayed on the screen).

Phone Commands

COMMAND	ACTION
Dial Number	Makes a call to a spoken phone number up to 10 digits.
Vehicle Phonebook	Makes a call to a contact that is stored in the vehicle phonebook.
Handset Phonebook	Makes a call to a contact that is stored in the handset phonebook.
Call History	Makes a call to a number in the incoming or outgoing call logs.
International Call	Makes an international call by allowing more than 10 digits to be spoken, as well as star (*), pound (#), and plus (+).

Navigation Commands

COMMAND	ACTION
Destination Home	Sets a route to your home that is stored in the Address Book.
Address	Allows user to set destination address.
Places	Sets a route to a facility near the current vehicle location.
Address Book	Searches for a location stored in the Address Book.
Previous Destinations	Sets a route to a previous destination.

Vehicle Information Commands

COMMAND	ACTION
Fuel Economy	Displays Fuel Economy information.
Maintenance	Displays Maintenance information.
Traffic Information	Turns the traffic information system on and off.
Where am I?	Displays current vehicle location.

Audio Commands

COMMAND	ACTION
AM	Changes the audio system mode to AM radio.
FM	Changes the audio system mode to FM radio.
XM	Changes the audio system mode to XM radio.
CD	Changes the audio system mode to CD.

Voice command examples

Some basic voice command examples are described here.

For navigation system commands, refer to the separate Navigation System Owner's Manual.

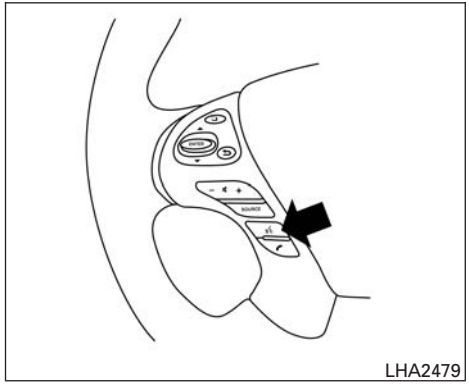

Example 1 — Placing a call to the phone number 800-662-6200:

1. Press the TALK switch located on the steering wheel. You will hear a prompt.
2. Say "Phone".
3. Say "Dial Number".
4. Say "800".
5. The system announces, "Please say the next 3 digits or dial, or say change number."
6. Say "662".
7. The system announces, "Please say the last 4 digits or say change number."
8. Say "6200".
9. The system announces, "Dial or Change Number?"
10. Say "Dial".
11. The system makes a call to 800-662- 6200.

NOTE:

- You can also speak "800-662-6200" (10 continuous digits) or "662-6200" (7 continuous digits), if the area code is not necessary. However, the 3-3-4 digit grouping is recommended for improved recognition. For additional information, refer to "How to speak numbers" in this section.
- You can only say a phone number using the 3-3-4 grouping, 7 digits, and 10 digits using this command. Please use the "International Call" command for all other formats, and when special characters such as star (*), pound (#), and plus (+) need to be entered.
- If you say "Change Number" during phone number entry, the system will automatically request that you repeat the number using the 3-3-4 format. In this case please say the area code first and then follow the prompts.
- Do not add a "1" in front of the area code when speaking phone numbers.

- If the system does not recognize your command, please try repeating the command using a natural voice. Speaking too slowly or too loudly may further decrease recognition performance.

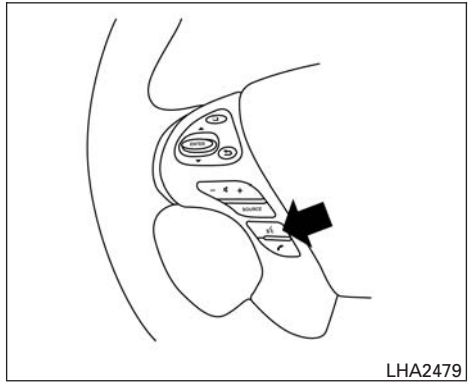

Example 2 — Placing an international call to the phone number 011-81-111-222-3333:

1. Press the TALK switch located on the steering wheel. You will hear a prompt.
2. Say “Phone”.
3. Say “International Call”.
4. Say “011811112223333”.
5. Say “Dial”.
6. The system makes a call to 011-81-111-222-3333.

NOTE:

Any digit input format is available in the International Number input process, as well as the special characters such as star (*), pound (#), and plus (+).

NISSAN VOICE RECOGNITION ALTERNATE COMMAND MODE

The Alternate Command Mode enables control of the audio and display systems as well as additional commands for the Vehicle Information, Phone and Navigation systems. With this setting active, the system does not announce or display the available commands at each step.

When Alternate Command Mode is activated, an expanded list of commands can be used after pushing the TALK switch. Under this mode, the screen for Standard Mode commands is not available on the display. Please review the expanded command list, available when this mode is active, as some Standard Mode commands are replaced. Please refer to examples of Alternate Command Mode screens.

Please note that in this mode the recognition success rate may be affected as the number of available commands and ways of speaking each command are increased. You can turn this mode

ON or OFF. When this mode is activated, the Voice Recognition Settings will change to show more options.

Activating Alternate Command Mode

1. Press the SETTING button on the control panel.
2. Touch the “Others” key on the display.
3. Touch the “Voice Recognition” key.
4. Touch the “Alternate Command Mode” key.
5. The confirmation message is displayed on the screen. Select the “OK” key to activate the Alternate Command Mode.
6. Alternate Command Mode is activated and the setting menu is expanded to include the Alternate Command Mode options. For additional information, refer to “Voice Recognition Settings” in this section for an explanation of the options.

Displaying the command list

If you are controlling the system by voice commands for the first time or do not know the appropriate voice command, perform the following procedure for displaying the voice command list (available only in Alternate Command Mode).

Press the switch, listen for the tone and say, “Help”. The system will respond by displaying the command list main menu.

Only manual controls such as the touch-screen can navigate the command list menu.

As an alternative to the voice command “Help”, you may access the command list using the following steps:

1. Press the SETTING button on the control panel.
2. Select the “Others” key using the NISSAN controller.
3. Select the “Voice Recognition” key using the NISSAN controller.

NOTE:

You can skip steps 1 to 3 if you say “Help”.

4. Select the “Command List” key using the NISSAN controller.
5. Select a category using the NISSAN controller. The command list for the category selected is shown.
6. If necessary, scroll the screen using the NISSAN controller to view the entire list.
7. Press the BACK button to return to the previous screen.

Alternate Command Mode command list

Phone Command

COMMAND	ACTION
Dial Number	Makes a call to a spoken phone number up to 10 digits.
Vehicle Phonebook	Makes a call to a contact in the vehicle phonebook.
Handset Phonebook	Makes a call to a contact in the handset phonebook.
International Call	Makes an international call by allowing more than 10 digits to be spoken, as well as star (*), pound (#), and plus (+).
Call <name>	Makes a call to a contact that is stored in either the Vehicle Phonebook or Handset Phonebook. Please say “Call” followed by a stored name.
Incoming Calls	Shows the last 5 incoming phone calls.
Outgoing Calls	Shows the last 5 outgoing phone calls.
Missed Calls	Shows the last 5 missed phone calls.

Navigation Command

COMMAND	ACTION
Home	Sets a route to your home that is stored in the Address Book.
Address	Searches for a location by the street address specified, and sets a route (for continental US and Canada only).
Places	Sets a route to a facility near the current vehicle location.
Address Book	Displays the first 5 entries of the Address Book.
Previous Destinations	Sets a route to a previous destination.
Previous Start Point	Calculates a route to your previous starting point of the last route.
Minimize Freeway Route	Recalculates a route to the current destination while minimizing freeway usage.
Fastest Route	Recalculates a route to the current destination using the fastest estimated time.
Shortest Route	Recalculates a route to the current destination using the shortest distance.
Cancel Route	Cancels the current route.
Delete Destination	Deletes the current destination.
Birdview Map	Changes the Map display to Birdview.

COMMAND	ACTION
Planview Map	Changes the Map display to a 2-dimensional view.
North Up	Changes the Map display to keep north pointing up on the screen.
Heading Up	Changes the Map display to keep the direction of the vehicle pointing up on the screen.
Zoom In <1 to 13>	Changes the map scale to a smaller number.
Zoom Out <1 to 13>	Changes the map scale to a larger number.
Guidance Voice ON/OFF	Turns the navigation voice guidance on or off.
Guide Voice Repeat	Repeats the last navigation voice guidance.

Information Command

COMMAND	ACTION
Fuel Economy	Displays Fuel Economy information.
Maintenance	Display Maintenance information.
Traffic Information	Turns the traffic information system on and off.
Where am I?	Displays the current vehicle location.
Weather Information	Displays weather information.
Weather Map	Displays the current weather map.

Audio Command

COMMAND	ACTION
AM	Turns to the AM band, selecting the station last played.
FM	Turns to the FM band, selecting the station last played.
XM	Turns to the SAT band, selecting the station last played.
CD	Starts to play a CD.
USB	Turns to the USB audio input.
Bluetooth Audio	Turns to the Bluetooth® audio system.
AUX	Turns to the AUX input.

Displaying user guide

You can confirm how to use voice commands by accessing a simplified User Guide, which contains basic instructions and tutorials for several voice commands.

1. Press the INFO button on the control panel.
2. Touch the “Voice Recognition” key.
3. Touch the “User Guide” key.
4. Touch an item.

Menu Item	Result
Getting Started	Describes the basics of how to operate the Voice Recognition system.
Let’s Practice	Initiates a practice session that demonstrates how to improve recognition by the system
Using the Address Book	Tutorial for using the Address Book
Finding a Street Address	Tutorial for Finding a Street Address
Placing Calls	Tutorial for making a phone call by voice command operation
Help on Speaking	Displays useful tips for how to correctly speak commands in order for them to be properly recognized by the system
Voice Recognition Settings	Describes the available Voice Recognition settings. For additional information, refer to “Voice Recognition Settings” in this section
Adapting the System to Your Voice	Tutorial for adapting the system to your voice

USING THE SYSTEM

Initialization

When the ignition switch is placed in the ON position, NISSAN Voice Recognition is initialized, which takes a few seconds. When completed, the system is ready to accept voice commands. If the switch is pressed before the initialization completes, the display will show the message: “System not ready.” or a beep sounds.

Before starting

To get the best performance from NISSAN Voice Recognition, observe the following:

- Keep the interior of the vehicle as quiet as possible. Close the windows to eliminate the surrounding noises (traffic noises, vibration sounds, etc.), which may prevent the system from recognizing the voice commands correctly.
- When the climate control is in the AUTO mode, the fan speed decreases automatically for easy recognition.
- Wait until a tone sounds before speaking a command.
- Speak in a natural voice without pausing between words.

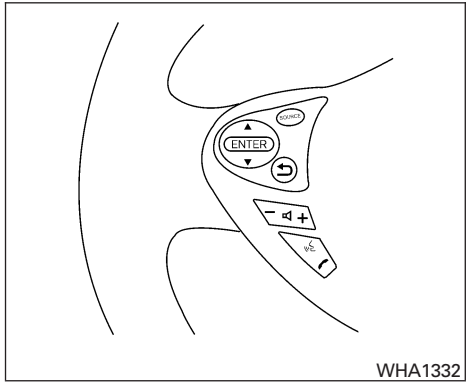

WHA1332

Giving voice commands

1. Press and release the button located on the steering wheel.
2. A list of commands appears on the screen, and the system announces, “Please say a command”.
3. After the tone sounds and the icon on the screen changes from to , speak a command.
4. Once a command is recognized, the system will announce the recognized command and perform the requested action.

   If the command is not recognized, the system repeats the announcement. Repeat the command in a clear voice after the tone.

Operating tips

- Say a command after the tone. Voice commands cannot be accepted when the icon is .
- If the command is not recognized, the system repeats the announcement. Repeat the command in a clear voice.
- Say “Back” when prompted to return to the previous screen.
- If you want to cancel the command, press and hold the switch. The message, “Voice recognition cancelled” will be displayed.
- If you want to adjust the volume of the system feedback, press the SETTING button on the control panel then touch the “Volume & Beeps” key on the touch-screen. Use the “+” and “-” keys to adjust the guidance volume to the desired level.

- To minimize the amount of prompts spoken by the system in Alternate Command Mode, use the Minimize Voice Feedback function. To access the Minimize Voice Feedback function press the SETTING button, then touch the “Others” key. Then touch the “Voice Recognition” key.

How to speak numbers

Voice Recognition requires a certain way to speak numbers when giving voice commands. Refer to the following examples.

General rule

- Only single digits 0 (zero) to 9 can be used.
- When saying the phone number 800-662-6200, the system will accept “eight-hundred” in addition to “eight zero zero” or “eight oh oh”. 500, 700, and 900 are also supported.

Examples

- 1-800-662-6200
  - “One eight zero zero six six two six two zero zero”
  - “One eight hundred six six two six two zero zero”

Improving Recognition of Phone numbers

You can improve the recognition of phone numbers by saying the phone number in three groups of numbers. For example, when you try to call 800-662-6200, say “eight zero zero” first, and the system will then ask you for the next 3 digits. Then, say “six six two”. After recognition, the system will then ask for the last 4 digits. Say, “six two zero zero”. Using this method of phone digit entry can improve recognition performance.

NOTE:

When speaking a house number, speak the number “0” as “zero” or “oh”. If the letter “O” is included in the house number, it will not be recognized as “0” even if you speak “oh” instead of “zero”.

Settings menu

The content of the Settings Menu differs when the system is in the Alternate Command Mode.

Command List

Displays the command list for Alternate Command Mode.

User Guide

The user guide provides basic instructions for using Voice Recognition and accessing some voice commands.

NOTE:

The user guide can also be accessed from within the INFO menu after pressing the INFO button.

Speaker Adaptation

Starts a system training procedure to learn the specific sounds of your voice. For additional information, refer to “Speaker adaptation function” in this section.

Alternate Command Mode

For advanced operation, an Alternate Command Mode is provided. This setting enables control of the audio system as well as additional commands for the Phone and Navigation systems. With this setting active, the system does not announce or display the available commands at each step. When this mode is activated, the Voice Recognition Settings will change to show more options.

Minimize Voice Feedback

Reduces the amount of the information spoken for each voice instruction.

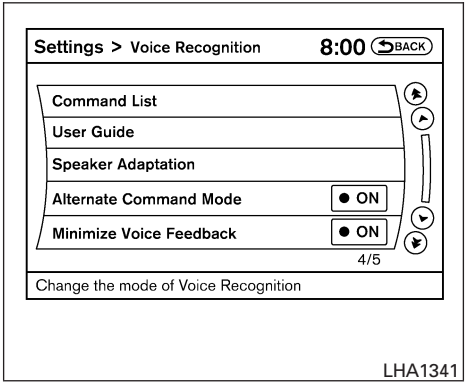

SPEAKER ADAPTATION FUNCTION

The Voice Recognition system has a function to learn the user's voice for better voice recognition performance. The system can memorize the voices of up to three persons.

Having the system learn the user's voice

1. Press the SETTING button on the control panel
2. Touch the "Others" key on the display.
3. Touch the "Voice Recognition" key.
4. Touch the "Speaker Adaptation" key.
5. Touch the user whose voice is to be memorized by the system.
6. Touch a category to be learned by the system from the following list:
   - Phone
   - Navigation
   - Information
   - Audio
   - Help

   The voice commands in the category are displayed.
7. Select a voice command to train.

   The Voice Recognition system starts.
8. The system requests that you repeat a command after a tone. This command is also displayed on the screen.
9. After the tone sounds and the icon on the screen changes from to , speak the command that the system requested.
10. When the system has recognized the voice command, the voice of the user is learned.

Press the switch or the BACK button to return to the previous screen.

If the system has learned the command correctly, the voice command indicator on the screen turns on.

Speaker Adaptation function settings

Edit Name

Edit the user name using the keypad displayed on the screen.

Reset Result

Resets the user's voice that the Voice Recognition system has learned.

Continuous Learning

When this item is turned to ON, you can have the system learn the voice commands in succession, without selecting commands one by one.

TROUBLESHOOTING GUIDE

The system should respond correctly to all voice commands without difficulty. If problems are encountered, follow the solutions given in this guide for the appropriate error.

Where the solutions are listed by number, try each solution in turn, starting with number one, until the problem is resolved.

Symptom/error message	Solution
Displays “COMMAND NOT RECOGNIZED” or the system fails to interpret the command correctly.	1. Ensure that the command format is valid, refer to “Standard Mode command list” or “Alternate Command Mode command list” in this section. 2. Speak clearly using your normal speech pattern and at a level appropriate to the ambient noise level. 3. Ensure that the ambient noise level is not excessive, for example, windows open or defrost on. **NOTE:** **If it is too noisy to use the phone, it is likely that voice commands will not be recognized.**
The system consistently selects the wrong voicetag in the phonebook.	1. Ensure that the voicetag requested matches what was originally stored. For additional information, refer to “Bluetooth® Hands-Free Phone System with Navigation System” in this section. 2. Replace one of the voicetags being confused with a different voicetag.

5 Starting and driving

Precautions when starting and driving. 5-2
Exhaust gas (carbon monoxide) 5-2
Three-way catalyst. 5-2
Tire Pressure Monitoring System (TPMS). 5-3
On-pavement and off-road driving precautions 5-6
Avoiding collision and rollover. 5-6
Off-road recovery. 5-7
Rapid air pressure loss 5-7
Drinking alcohol/drugs and driving. 5-8
Driving safety precautions 5-8
Push-Button Ignition Switch 5-10
Operating range. 5-11
Push-button ignition switch positions 5-11
Emergency engine shut off 5-12
NISSAN Intelligent Key® battery discharge. 5-12
NISSAN vehicle immobilizer system 5-13
Before starting the NISSAN PUREDRIVE™ Hybrid System. 5-13
Starting the NISSAN PUREDRIVE™ Hybrid System . . 5-14
Remote start (if so equipped) 5-14
Driving the vehicle 5-15
Continuously Variable Transmission (CVT). 5-15
Parking brake 5-18
Blind Spot Warning (BSW) System (if so equipped) 5-19
Blind Spot Warning (BSW) system. 5-19
BSW system operation 5-20
BSW system precautions 5-22
BSW driving situations. 5-22
The Rear Cross Traffic Alert (RCTA) system (if so equipped) 5-25
RCTA system operation 5-26
RCTA system precautions 5-27
RCTA system operation 5-29
Radar maintenance 5-30
Cruise control. 5-31
Precautions on cruise control 5-31
Cruise control operations. 5-32
Break-in schedule 5-33
Fuel-efficient driving tips 5-33
Increasing fuel economy. 5-35
Intelligent 4WD (if so equipped). 5-35
4x4–i system operation 5-35
Parking/parking on hills. 5-39
Power steering 5-40

Brake system 5-40
Brake precautions 5-40
Anti-lock Braking System (ABS). 5-41
Brake assist 5-42
Vehicle Dynamic Control (VDC) system 5-42
Rise-up and build-up 5-44
Brake force distribution 5-44
Hill Descent Control System (if so equipped) 5-45
Hill start assist system 5-46
Rear sonar system (RSS). 5-47
Cold weather driving. 5-48
Freeing a frozen door lock 5-48
Antifreeze. 5-48
Battery 5-48
Draining of coolant water 5-48
Tire equipment 5-48
Special winter equipment. 5-48
Driving on snow or ice 5-48
Engine block heater (if so equipped). 5-49
Active noise control. 5-50

⚠WARNING

- **Do not leave children or adults who would normally require the assistance of others alone in your vehicle. Pets should also not be left alone. They could accidentally injure themselves or others through inadvertent operation of the vehicle. Also, on hot, sunny days, temperatures in a closed vehicle could quickly become high enough to cause severe or possibly fatal injuries to people or animals.**
- **Properly secure all cargo with ropes or straps to help prevent it from sliding or shifting. Do not place cargo higher than the seatbacks. In a sudden stop or collision, unsecured cargo could cause personal injury.**

EXHAUST GAS (carbon monoxide)

⚠WARNING

- **Do not breathe exhaust gases; they contain colorless and odorless carbon monoxide. Carbon monoxide is dangerous. It can cause unconsciousness or death.**
- **If you suspect that exhaust fumes are entering the vehicle, drive with all windows fully open, and have the vehicle inspected immediately.**
- **Do not run the engine in closed spaces such as a garage.**
- **Do not park the vehicle with the engine running for any extended length of time.**
- **Keep the rear vent windows, liftgates, doors and trunk lids (if so equipped) closed while driving, otherwise exhaust gases could be drawn into the passenger compartment. If you must drive with one of these open, follow these precautions:**
  1. **Open all the windows.**
  2. **Set the air recirculation button to off and the fan control dial to high to circulate the air.**
- **If electrical wiring or other cable connections must pass to a trailer through the seal on the liftgate or the body, follow the manufacturer's recommendation to prevent carbon monoxide entry into the vehicle.**
- **The exhaust system and body should be inspected by a qualified mechanic whenever:**
  a. **The vehicle is raised for service.**
  b. **You suspect that exhaust fumes are entering into the passenger compartment.**
  c. **You notice a change in the sound of the exhaust system.**
  d. **You have had an accident involving damage to the exhaust system, underbody, or rear of the vehicle.**

THREE-WAY CATALYST

The three-way catalyst is an emission control device installed in the exhaust system. Exhaust gases in the three-way catalyst are burned at high temperatures to help reduce pollutants.

⚠WARNING

- **The exhaust gas and the exhaust system are very hot. Keep people, animals or flammable materials away from the exhaust system components.**

- **Do not stop or park the vehicle over flammable materials such as dry grass, waste paper or rags. They may ignite and cause a fire.**

⚠ CAUTION

- **Do not use leaded gasoline. Deposits from leaded gasoline will seriously reduce the three-way catalyst's ability to help reduce exhaust pollutants.**
- **Keep your engine tuned up. Malfunctions in the ignition, fuel injection, or electrical systems can cause overrich fuel flow into the three-way catalyst, causing it to overheat. Do not keep driving if the engine misfires, or if noticeable loss of performance or other unusual operating conditions are detected. Have the vehicle inspected promptly by a NISSAN dealer.**
- **Avoid driving with an extremely low fuel level. Running out of fuel could cause the engine to misfire, damaging the three-way catalyst.**
- **Do not race the engine while warming it up.**
- **Do not push or tow your vehicle to start the engine.**

TIRE PRESSURE MONITORING SYSTEM (TPMS)

Each tire, including the spare (if provided), should be checked monthly when cold and inflated to the inflation pressure recommended by the vehicle manufacturer on the vehicle placard or tire inflation pressure label. (If your vehicle has tires of a different size than the size indicated on the vehicle placard or tire inflation pressure label, you should determine the proper tire inflation pressure for those tires.)

As an added safety feature, your vehicle has been equipped with a Tire Pressure Monitoring System (TPMS) that illuminates a low tire pressure telltale when one or more of your tires is significantly under-inflated. Accordingly, when the low tire pressure telltale illuminates, you should stop and check all four tires as soon as possible, and inflate them to the proper pressure. Driving on a significantly under-inflated tire causes the tire to overheat and can lead to tire failure. Under-inflation also reduces fuel efficiency and tire tread life, and may affect the vehicle's handling and stopping ability.

Please note that the TPMS is not a substitute for proper tire maintenance, and it is the driver's responsibility to maintain correct tire pressure, even if under-inflation has not reached the level to trigger illumination of the TPMS low tire pressure telltale.

Your vehicle has also been equipped with a TPMS malfunction indicator to indicate when the system is not operating properly. The TPMS malfunction indicator is combined with the low tire pressure telltale. When the system detects a malfunction, the telltale will flash for approximately one minute and then remain continuously illuminated. This sequence will continue upon subsequent vehicle start-ups as long as the malfunction exists. When the malfunction indicator is illuminated, the system may not be able to detect or signal low tire pressure as intended. TPMS malfunctions may occur for a variety of reasons, including the installation of replacement or alternate tires or wheels on the vehicle that prevent the TPMS from functioning properly. Always check the TPMS malfunction telltale after replacing one or more tires or wheels on your vehicle to ensure that the replacement or alternate tires and wheels allow the TPMS to continue to function properly.

Additional information:

- **The TPMS does not monitor the tire pressure of the spare tire.**

- The TPMS will activate only when the vehicle is driven at speeds above 16 MPH (25 km/h). Also, this system may not detect a sudden drop in tire pressure (for example a flat tire while driving).
- The low tire pressure warning light does not automatically turn off when the tire pressure is adjusted. After the tire is inflated to the recommended pressure, the vehicle must be driven at speeds above 16 MPH (25 km/h) to activate the TPMS and turn off the low tire pressure warning light. Use a tire pressure gauge to check the tire pressure.
- The “Tire Pressure Low - Add Air” warning appears in the vehicle information display when the low tire pressure warning light is illuminated and low tire pressure is detected. The “Tire Pressure Low - Add Air” warning turns off when the low tire pressure warning light turns off.
- The “Tire Pressure Low - Add Air” warning does not appear if the low tire pressure warning light illuminates to indicate a TPMS malfunction.
- Tire pressure rises and falls depending on the heat caused by the vehicle’s operation and the outside temperature. Low outside temperature can lower the temperature of the air inside the tire which can cause a lower tire inflation pressure. This may cause the low tire pressure warning light to illuminate. If the warning light illuminates, check the tire pressure for all four tires.
- The Tire and Loading Information label (also referred to as the vehicle placard or tire inflation pressure label) is located in the driver’s door opening.
- You can also check the pressure of all tires (except the spare tire) on the vehicle information display screen. The order of the tire pressure figures displayed on the screen corresponds with the actual order of the tire position.

For additional information, refer to “Low tire pressure warning light” in the “Instruments and controls” section and “Tire Pressure Monitoring System (TPMS)” in the “In case of emergency” section.

⚠ WARNING

- **Radio waves could adversely affect electric medical equipment. Those who use a pacemaker should contact the electric medical equipment manufacturer for the possible influences before use.**
- **If the low tire pressure warning light illuminates while driving, avoid sudden steering maneuvers or abrupt braking, reduce vehicle speed, pull off the road to a safe location and stop the vehicle as soon as possible. Driving with underinflated tires may permanently damage the tires and increase the likelihood of tire failure. Serious vehicle damage could occur and may lead to an accident and could result in serious personal injury. Check the tire pressure for all four tires. Adjust the tire pressure to the recommended COLD tire pressure shown on the Tire and Loading Information label to turn the low tire pressure warning light OFF. If you have a flat tire, replace it with a spare tire as soon as possible. (For additional information, refer to “Flat tire” in the “In case of emergency” section for changing a flat tire.)**

- **When a spare tire is mounted or a wheel is replaced, tire pressure will not be indicated, the TPMS will not function and the low tire pressure warning light will flash for approximately 1 minute. The light will remain on after 1 minute. Contact your NISSAN dealer as soon as possible for tire replacement and/or system resetting.**
- **Replacing tires with those not originally specified by NISSAN could affect the proper operation of the TPMS.**
- **Do not inject any tire liquid or aerosol tire sealant into the tires, as this may cause a malfunction of the tire pressure sensors.**

⚠ CAUTION

- **The TPMS may not function properly when the wheels are equipped with tire chains or the wheels are buried in snow.**
- **Do not place metalized film or any metal parts (antenna, etc.) on the windows. This may cause poor reception of the signals from the tire pressure sensors, and the TPMS will not function properly.**

Some devices and transmitters may temporarily interfere with the operation of the TPMS and cause the low tire pressure warning light to illuminate.

Some examples are:

– Facilities or electric devices using similar radio frequencies are near the vehicle.

– If a transmitter set to similar frequencies is being used in or near the vehicle.

– If a computer (or similar equipment) or a DC/AC converter is being used in or near the vehicle.

FCC Notice:

For USA:

This device complies with Part 15 of the FCC Rules. Operation is subject to the following two conditions: (1) This device may not cause harmful interference, and (2) this device must accept any interference received, including interference that may cause undesired operation.

NOTE:

Changes or modification not expressly approved by the party responsible for compliance could void the user's authority to operate the equipment.

For Canada:

This device complies with Industry Canada license-exempt RSS standard(s). Operation is subject to the following two conditions: (1) this device may not cause interference, and (2) this device must accept any interference, including interference that may cause undesired operation of the device.

TPMS with Easy Fill Tire Alert

When adding air to an under-inflated tire, the TPMS with Easy Fill Tire Alert provides visual and audible signals outside the vehicle to help you inflate the tires to the recommended COLD tire pressure.

Vehicle set-up:

1. Park the vehicle in a safe and level place.
2. Apply the parking brake and place the shift lever to the P (Park) position.
3. Place the ignition switch to the ON position. Do not start the engine.

Operation:

1. Add air to the tire.
2. After a few seconds, the hazard indicators will start flashing.
3. When the designated pressure is reached, the horn beeps once and the hazard indicators stop flashing.
4. Perform the above steps for each tire.
   - If the tire is over-inflated more than approximately 4 psi (30 kPa), the horn beeps and the hazard indicators flash three times. To correct the pressure, push the core of the valve stem on the tire briefly to release pressure. When the pressure reaches the designated pressure, the horn beeps once.
   - If the hazard indicator does not flash within approximately 15 seconds after starting to inflate the tire, it indicates that the Easy Fill Tire Alert is not operating.
   - The TPMS will not activate the Easy Fill Tire Alert under the following conditions:
     - If there is interference from an external device or transmitter.
     - The air pressure from the inflation device is not sufficient to inflate the tire.
     - There is a malfunction in the TPMS system.
     - There is a malfunction in the horn or hazard indicators.
     - The identification code of the tires pressure sensor is not registered to the system.
     - The battery of the tire pressure sensor is low.
   - If the Easy Fill Tire Alert does not operate due to TPMS interference, move the vehicle about 3 ft (1 m) backward or forward and try again.

If the Easy Fill Tire Alert is not working, use a tire pressure gauge.

ON-PAVEMENT AND OFF-ROAD DRIVING PRECAUTIONS

Utility vehicles have a significantly higher rollover rate than other types of vehicles.

They have higher ground clearance than passenger cars to make them capable of performing in a variety of on-pavement and off-road applications. This gives them a higher center of gravity than ordinary vehicles. An advantage of higher ground clearance is a better view of the road, allowing you to anticipate problems. However, they are not designed for cornering at the same speeds as conventional 2-wheel drive vehicles any more than low-slung sports cars are designed to perform satisfactorily under off-road conditions. If at all possible, avoid sharp turns at high speeds. As with other vehicles of this type, failure to operate this vehicle correctly may result in loss of control or vehicle rollover. In a rollover crash, an unbelted person is significantly more likely to die than a person wearing a seat belt.

For additional information, refer to “Driving safety precautions” in this section.

AVOIDING COLLISION AND ROLLOVER

⚠ WARNING

Failure to operate this vehicle in a safe and prudent manner may result in loss of control or an accident.

Be alert and drive defensively at all times. Obey all traffic regulations. Avoid excessive speed, high speed cornering, or sudden steering maneuvers, because these driving practices could cause you to lose control of your vehicle. **As with any vehicle, loss of control could result in a collision with other vehicles or objects or cause the vehicle to roll over, particularly if the loss of control causes the vehicle to**

slide sideways. Be attentive at all times, and avoid driving when tired. Never drive when under the influence of alcohol or drugs (including prescription or over-the-counter drugs which may cause drowsiness). Always wear your seat belt as outlined in the "Safety – Seats, seat belts and supplemental restraint system" section of this manual, and also instruct your passengers to do so.

Seat belts help reduce the risk of injury in collisions and rollovers. **In a rollover crash, an unbelted or improperly belted person is significantly more likely to be injured or killed than a person properly wearing a seat belt.**

OFF-ROAD RECOVERY

While driving, the right side or left side wheels may unintentionally leave the road surface. If this occurs, maintain control of the vehicle by following the procedure below. Please note that this procedure is only a general guide. The vehicle must be driven as appropriate based on the conditions of the vehicle, road and traffic.

1. Remain calm and do not overreact.
2. Do not apply the brakes.
3. Maintain a firm grip on the steering wheel with both hands and try to hold a straight course.
4. When appropriate, slowly release the accelerator pedal to gradually slow the vehicle.
5. If there is nothing in the way, steer the vehicle to follow the road while vehicle speed is reduced. Do not attempt to drive the vehicle back onto the road surface until vehicle speed is reduced.
6. When it is safe to do so, gradually turn the steering wheel until both tires return to the road surface. When all tires are on the road surface, steer the vehicle to stay in the appropriate driving lane.

- If you decide that it is not safe to return the vehicle to the road surface based on vehicle, road or traffic conditions, gradually slow the vehicle to a stop in a safe place off the road.

RAPID AIR PRESSURE LOSS

Rapid air pressure loss or a "blow-out" can occur if the tire is punctured or is damaged due to hitting a curb or pothole. Rapid air pressure loss can also be caused by driving on under-inflated tires.

Rapid air pressure loss can affect the handling and stability of the vehicle, especially at highway speeds.

Help prevent rapid air pressure loss by maintaining the correct air pressure and visually inspect the tires for wear and damage. For additional information, refer to "Wheels and tires" in the "Maintenance and do-it-yourself" section of this manual. If a tire rapidly loses air pressure or "blows-out" while driving, maintain control of the vehicle by following the procedure below. Please note that this procedure is only a general guide. The vehicle must be driven as appropriate based on the conditions of the vehicle, road and traffic.

⚠ WARNING

The following actions can increase the chance of losing control of the vehicle if there is a sudden loss of tire air pressure. Losing control of the vehicle may cause a collision and result in personal injury.

- **The vehicle generally moves or pulls in the direction of the flat tire.**
- **Do not rapidly apply the brakes.**
- **Do not rapidly release the accelerator pedal.**
- **Do not rapidly turn the steering wheel.**

1. Remain calm and do not overreact.
2. Maintain a firm grip on the steering wheel with both hands and try to hold a straight course.

3. When appropriate, slowly release the accelerator pedal to gradually slow the vehicle.
4. Gradually steer the vehicle to a safe location off the road and away from traffic if possible.
5. Lightly apply the brake pedal to gradually stop the vehicle.
6. Turn on the hazard warning flashers and contact a roadside emergency service to change the tire or for additional information, refer to “Changing a flat tire” in the “In case of emergency” section of this manual.

DRINKING ALCOHOL/DRUGS AND DRIVING

⚠ WARNING

Never drive under the influence of alcohol or drugs. Alcohol in the bloodstream reduces coordination, delays reaction time and impairs judgement. Driving after drinking alcohol increases the likelihood of being involved in an accident injuring yourself and others. Additionally, if you are injured in an accident, alcohol can increase the severity of the injury.

NISSAN is committed to safe driving. However, you must choose not to drive under the influence of alcohol. Every year thousands of people are injured or killed in alcohol-related collisions. Although the local laws vary on what is considered to be legally intoxicated, the fact is that alcohol affects all people differently and most people underestimate the effects of alcohol.

Remember, drinking and driving don’t mix! That is true for drugs (over-the-counter, prescription) and illegal drugs too. Don’t drive if your ability to operate your vehicle is impaired by alcohol, drugs, or some other physical condition.

DRIVING SAFETY PRECAUTIONS

Your NISSAN is designed for both normal and off-road use. However, avoid driving in deep water or mud as your NISSAN is mainly designed for leisure use, unlike a conventional off-road vehicle.

Remember that 2-wheel drive models are less capable than 4-wheel drive models for rough road driving and extrication when stuck in deep snow or mud, or the like.

Please observe the following precautions:

⚠ WARNING

- **Spinning the front wheels on slippery surface may cause the 4WD warning message to display and the 4WD system to automatically switch from the 4WD to the 2WD mode. This could reduce the traction. Be especially careful when towing a trailer. (4WD models)**
- **Drive carefully when off the road and avoid dangerous areas. Every person who drives or rides in this vehicle should be seated with their seat belt fastened. This will keep you and your passengers in position when driving over rough terrain.**
- **Do not drive across steep slopes. Instead drive either straight up or straight down the slopes. Off-road vehicles can tip over sideways much more easily than they can forward or backward.**
- **Many hills are too steep for any vehicle. If you drive up them, you may stall. If you drive down them, you may not be able to control your speed. If you drive across them, you may roll over.**

- **Do not shift gears while driving on downhill grades as this could cause loss of control of the vehicle.**
- **Stay alert when driving to the top of a hill. At the top there could be a drop-off or other hazard that could cause an accident.**
- **If your engine stalls or you cannot make it to the top of a steep hill, never attempt to turn around. Your vehicle could tip or roll over. Always back straight down in R (Reverse) gear and apply brakes to control your speed.**
- **Heavy braking going down a hill could cause your brakes to overheat and fade, resulting in loss of control and an accident. Apply brakes lightly and use a low gear to control your speed.**
- **Unsecured cargo can be thrown around when driving over rough terrain. Properly secure all cargo so it will not be thrown forward and cause injury to you or your passengers.**
- **Secure heavy loads in the cargo area as far forward and as low as possible. Do not equip the vehicle with tires larger than specified in this manual. This could cause your vehicle to roll over.**
- **Do not grip the inside or spokes of the steering wheel when driving off-road. The steering wheel could move suddenly and injure your hands. Instead drive with your fingers and thumbs on the outside of the rim.**
- **Before operating the vehicle, ensure that the driver and all passengers have their seat belts fastened.**
- **Always drive with the floor mats in place as the floor may become hot.**
- **Lower your speed when encountering strong crosswinds. With a higher center of gravity, your NISSAN is more affected by strong side winds. Slower speeds ensure better vehicle control.**
- **Do not drive beyond the performance capability of the tires, even with 4WD engaged.**
- **For 4WD equipped vehicles, do not attempt to raise 2 wheels off the ground and shift the transmission to any drive or reverse position with the engine running. Doing so may result in drivetrain damage or unexpected vehicle movement which could result in serious vehicle damage or personal injury.**
- **Do not attempt to test a 4WD equipped vehicle on a 2-wheel dynamometer (such as the dynamometers used by some states for emissions testing), or similar equipment even if the other 2 wheels are raised off the ground. Make sure you inform test facility personnel that your vehicle is equipped with 4WD before it is placed on a dynamometer. Using the wrong test equipment may result in drivetrain damage or unexpected vehicle movement which could result in serious vehicle damage or personal injury.**
- **When a wheel is off the ground due to an unlevel surface, do not spin the wheel excessively.**
- **Accelerating quickly, sharp steering maneuvers or sudden braking may cause loss of control.**
- **If at all possible, avoid sharp turning maneuvers, particularly at high speeds. Your NISSAN vehicle has a higher center of gravity than a passenger car. The vehicle is not designed for cornering at the same speeds as passenger cars.**

- **Failure to operate this vehicle correctly could result in loss of control and/or a rollover accident.**
- **Always use tires of the same type, size, brand, construction (bias, bias-belted, or radial), and tread pattern on all 4 wheels. Install tire chains on the front wheels when driving on slippery roads and drive carefully.**
- **Be sure to check the brakes immediately after driving in mud or water. For additional information, refer to "Brake system" in this section for "Wet brakes".**
- **Avoid parking your vehicle on steep hills. If you get out of the vehicle and it rolls forward, backward or sideways, you could be injured.**
- **Whenever you drive off-road through sand, mud or water as deep as the wheel hub, more frequent maintenance may be required. For additional information, refer to "Periodic maintenance" in the "NISSAN Service and Maintenance Guide."**

⚠ WARNING

Do not operate the push-button ignition switch while driving the vehicle except in an emergency. (The NISSAN PURE-DRIVE™ Hybrid System will stop when the ignition switch is pushed 3 consecutive times or the ignition switch is pushed and held for more than 2 seconds.) If the hybrid system is turned off while the vehicle is being driven, this could lead to a crash and serious injury.

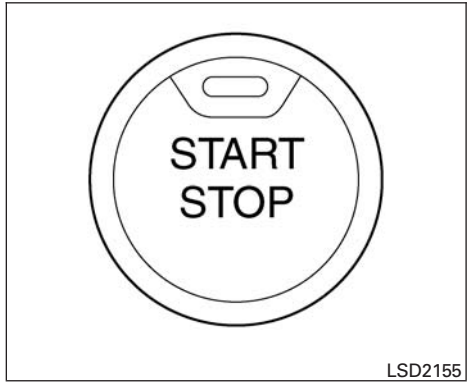

When the ignition switch is pushed without depressing the brake pedal, the ignition switch will illuminate.

Push the ignition switch center:

- once to change to ACC.
- two times to change to ON.
- three times to return to OFF.

The ignition switch will automatically return to the LOCK position when any door is either opened or closed with the switch in the OFF position.

The ignition lock is designed so that the ignition switch position cannot be switched to OFF until the shift lever is moved to the P (Park) position.

When the ignition switch cannot be pushed toward the OFF position, proceed as follows:

1. Move the shift lever into the P (Park) position.
2. Push the ignition switch. The ignition switch position will change to the ON position.
3. Push the ignition switch again to the OFF position.

The shift lever can be moved from the P (Park) position if the ignition switch is in the ON position and the brake pedal is depressed.

If the battery of the vehicle is discharged, the push-button ignition switch cannot be moved from the LOCK position.

Some indicators and warnings for operation are displayed on the vehicle information display. For additional information, refer to “Vehicle information display” in the “Instruments and controls” section of this manual.

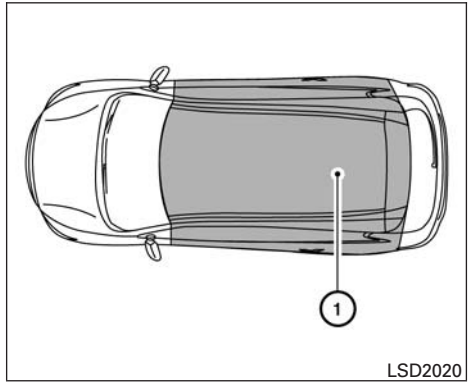

OPERATING RANGE

The Intelligent Key functions can only be used when the Intelligent Key is within the specified operating range.

When the Intelligent Key battery is almost discharged or strong radio waves are present near the operating location, the Intelligent Key system’s operating range becomes narrower and may not function properly.

If the Intelligent Key is within the operating range, it is possible for anyone, even someone who does not carry the Intelligent Key, to push the ignition switch to start the engine.

The operating range of the engine start function is inside of the vehicle ①.

- The luggage area is not included in the operating range, but the Intelligent Key may function.
- If the Intelligent Key is placed on the instrument panel, inside the glove box, storage bin or door pocket, the Intelligent Key may not function.
- If the Intelligent Key is placed near the door or window outside the vehicle, the Intelligent Key may function.

PUSH-BUTTON IGNITION SWITCH POSITIONS

OFF:

The ignition switch is in the OFF position when the engine is turned off using the ignition switch. No lights will illuminate on the ignition switch.

ACC (Accessories):

This position activates electrical accessories, such as the radio, when the engine is not running.

ACC has a battery saver feature that will turn the ignition switch to the OFF position after a period of time under the following conditions:

- All doors are closed.
- Shift lever is in P (Park).

The battery saver feature will be cancelled if any of the following occur:

- Any door is opened.
- Shift lever is moved out of P (Park).
- Ignition switch changes position.

ON (Normal operating position):

This position turns on the ignition system and electrical accessories.

ON has a battery saver feature that will turn the ignition switch to the OFF position after some time if the vehicle is not running under the following conditions:

- All doors are closed.
- Shift lever is in P (Park).

The battery saver feature will be cancelled if any door is open.

⚠ CAUTION

Do not leave the vehicle with the ignition switch in ACC or ON positions when the engine is not running for an extended period. This can discharge the battery.

EMERGENCY ENGINE SHUT OFF

To shut off the engine in an emergency situation while driving, perform the following procedure:

– Rapidly push the push-button ignition switch three consecutive times in less than 1.5 seconds, or

– Push and hold the push-button ignition switch for more than 2 seconds.

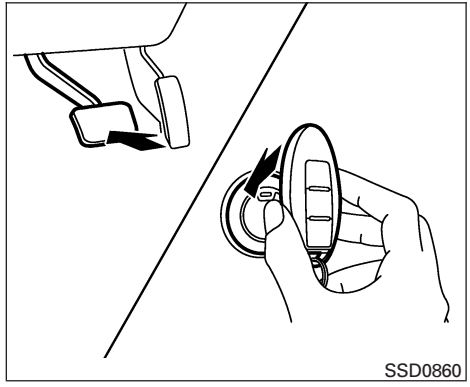

NISSAN INTELLIGENT KEY® BATTERY DISCHARGE

If the battery of the NISSAN Intelligent Key® is discharged, or environmental conditions interfere with the Intelligent Key operation, start the engine according to the following procedure:

1. Place the shift lever in the P (Park) position.
2. Firmly apply the foot brake.
3. Touch the ignition switch with the Intelligent Key as illustrated. (A chime will sound.)

After Step 3 is performed, when the ignition switch is pushed without depressing the brake pedal, the ignition switch position will change to ACC.

4. Push the ignition switch while depressing the brake pedal within ten seconds after the chime sounds. The engine will start.

NOTE:

- When the ignition switch is pushed to the ACC or ON position or the engine is started by the above procedure, the Intelligent Key battery discharge indicator appears in the vehicle information display even when the Intelligent Key is inside the vehicle. This is not a malfunction. To turn off the Intelligent Key battery discharge indicator, touch the ignition switch with the Intelligent Key again.
- If the Intelligent Key battery discharge indicator appears, replace the battery as soon as possible. For additional information, refer to “Battery Replacement” in the “Maintenance and do-it-yourself” section of this manual.

NISSAN VEHICLE IMMOBILIZER SYSTEM

The NISSAN Vehicle Immobilizer system will not allow the engine to start without the use of the registered key.

If the engine fails to start using a registered key (for example, when interference is caused by another registered key, an automated toll road device or automatic payment device on the key ring), restart the engine using the following procedure:

1. Leave the ignition switch in the ON position for approximately 5 seconds.
2. Place the ignition switch in the OFF or LOCK position, and wait approximately 10 seconds.
3. Repeat Steps 1 and 2.
4. Restart the engine while holding the device (which may have caused the interference) separate from the registered key.

If the no start condition re-occurs, NISSAN recommends placing the registered key on a separate key ring to avoid interference from other devices.

- Make sure the area around the vehicle is clear.
- Check fluid levels such as engine oil, coolant, brake fluid, and windshield-washer fluid as frequently as possible, or at least whenever you refuel.
- Check that all windows and lights are clean.
- Visually inspect tires for their appearance and condition. Also check tires for proper inflation.
- Check that all doors are closed.
- Position seat and adjust head restraints/headrests.
- Adjust inside and outside mirrors.
- Fasten seat belts and ask all passengers to do likewise.
- Check the operation of warning lights when the ignition switch is placed in the ON position. For additional information, refer to “Warning/indicator lights and audible reminders” in the “Instruments and controls” section of this manual.

STARTING THE NISSAN PUREDRIVE™ HYBRID SYSTEM

1. Apply the parking brake.
2. Move the shift lever to P (Park) or N (Neutral). P (Park) is recommended.

   The NISSAN PUREDRIVE™ Hybrid System is designed not to operate if the shift lever is in any of the driving positions.

3. Depress the brake pedal and push the ignition switch to start the hybrid system. The READY to drive indicator will illuminate on the meter.

   When starting the hybrid system at very low outside temperatures, the READY to drive indicator light will flash and it may take longer for the READY to drive indicator light to illuminate. When the READY to drive indicator light is flashing, it cannot be shifted out of P (Park).

NOTE:

Do not start the vehicle in the N (Neutral) position (in cold conditions only).

- The hybrid system may not start even with the READY to drive indicator light illuminated. Once the READY to drive indicator light is illuminated you may begin driving the vehicle.

NOTE:

Care should be taken to avoid situations that can lead to potential 12-volt battery discharge and potential no-start conditions such as:

1. **Installation or extended use of electronic accessories that consume 12-volt battery power when the engine is not running (Phone chargers, GPS, DVD players, etc.)**
2. **Vehicle is not driven regularly and/or only driven short distances.**

In these cases, the 12-volt battery may need to be charged to maintain 12-volt battery health.

REMOTE START (if so equipped)

Vehicles started with the remote start require the ignition switch to be placed in the ON position before the shift lever can be moved from the P (Park) position. To place the ignition switch to the ON position, follow these steps:

1. Make sure that the Intelligent Key is on you.
2. Apply the brake.
3. Press the ignition switch once to the ON position.

For additional information, refer to “NISSAN Intelligent Key®” in the “Pre-driving checks and adjustments” section of this manual.

CONTINUOUSLY VARIABLE TRANSMISSION (CVT)

The Continuously Variable Transmission (CVT) in your vehicle is electronically controlled to produce maximum power and smooth operation.

The recommended operating procedures for this transmission are shown on the following pages. Follow these procedures for maximum vehicle performance and driving enjoyment.

Engine power may be automatically reduced to protect the CVT if the engine speed increases quickly when driving on slippery roads or while being tested on some dynamometers.

Starting the vehicle

1. After starting the engine, fully depress the foot brake pedal before moving the shift lever out of the P (Park) position.
   This CVT is designed so that the foot brake pedal must be depressed before shifting from P (Park) to any driving position while the ignition switch is in the ON position.
   The shift lever cannot be moved out of the P (Park) position and into any of the other positions if the ignition switch is placed in the LOCK, OFF or ACC position while the Ready Light illuminates.
2. Keep the foot brake pedal depressed and move the shift lever to a driving position.
3. Release the parking brake and foot brake pedal, and then gradually start the vehicle in motion.

⚠ WARNING

- **Do not depress the accelerator pedal while shifting from P (Park) or N (Neutral) to R (Reverse) or D (Drive) position. Always depress the brake pedal until shifting is completed. Failure to do so could cause you to lose control and have an accident.**
- **Cold engine idle speed is high, so use caution when shifting into a forward or reverse gear before the engine has warmed up.**
- **Never shift to P (Park) or R (Reverse) while vehicle is moving. Failure to do so could cause you to lose control and have an accident.**

⚠ CAUTION

- **When stopping the vehicle on an uphill grade, do not hold the vehicle by depressing the accelerator pedal. The foot brake should be used for this purpose.**
- **Do not downshift abruptly on slippery roads. This may cause a loss of control.**
- **Except in an emergency, do not shift to the N (Neutral) position while driving. Coasting with the transmission in the N (Neutral) position may cause serious damage to the transmission.**

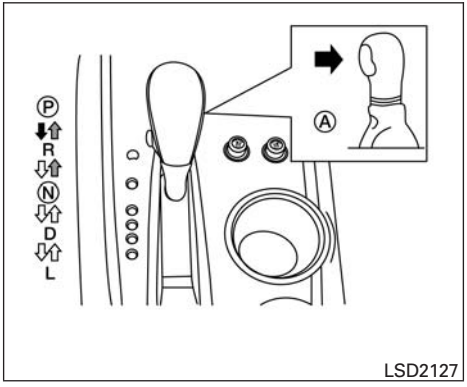

Shifting

➡ Press the button Ⓐ while depressing the brake pedal

Press the button Ⓐ to shift

⇨ Shift without pressing Ⓐ button

After starting the engine, fully depress the brake pedal, push and press the shift lever button and move the shift lever from the P (Park) position to any of the desired shift positions.

⚠ WARNING

Apply the parking brake if the shift lever is in any position while the engine is not running. Failure to do so could cause the vehicle to move unexpectedly or roll away and result in serious personal injury or property damage.

⚠ CAUTION

Use the P (Park) or R (Reverse) position only when the vehicle is completely stopped.

P (Park):

⚠ CAUTION

To prevent transmission damage, use the P (Park) or R (Reverse) position only when the vehicle is completely stopped.

Use the P (Park) shift lever position when the vehicle is parked or when starting the engine. Make sure the vehicle is completely stopped. **The brake pedal must be depressed and the shift lever button pushed in to move the shift lever from N (Neutral) or any drive position to P (Park).** Apply the parking brake. When parking on a hill, apply the parking brake first, then move the shift lever into the P (Park) position.

R (Reverse):

⚠ CAUTION

To prevent transmission damage, use the P (Park) or R (Reverse) position only when the vehicle is completely stopped.

Use the R (Reverse) position to back up. Make sure the vehicle is completely stopped before selecting the R (Reverse) position. **The brake pedal must be depressed and the shift lever button pushed in to move the shift lever from P (Park), N (Neutral) or any drive position to R (Reverse).**

N (Neutral):

Neither forward nor reverse gear is engaged. The engine can be started in this position. You may shift to N (Neutral) and restart a stalled engine while the vehicle is moving.

D (Drive):

Use this position for all normal forward driving.

L (Low):

Use this position for engine braking on steep downhill gradients/climbing steep slopes and whenever approaching sharp bends. Do not use the L (Low) position in any other circumstances.

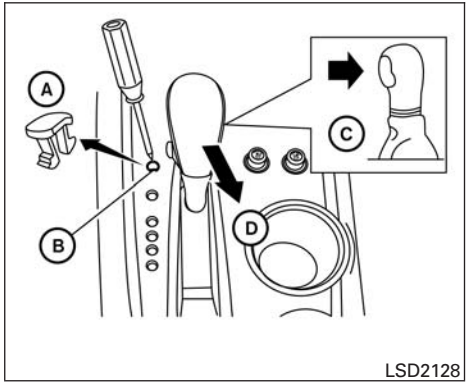

Shift lock release

If the battery charge is low or discharged, the shift lever may not be moved from the P (Park) position even with the brake pedal depressed and the shift lever button pushed. To move the shift lever, perform the following procedure:

1. Place the ignition switch in the OFF or LOCK position.
2. Apply the parking brake.
3. Remove the shift lock release cover Ⓐ using a suitable tool.
4. Push down the shift lock release Ⓑ using a suitable tool.
5. Press the shift lever button Ⓒ and move the shift lever to the N (Neutral) position Ⓓ while holding down the shift lock release. The vehicle may be moved to the desired location. Replace the removed shift lock release cover after the operation. If the shift lever cannot be moved out of the P (Park) position, have a NISSAN dealer check the CVT system as soon as possible.

⚠ WARNING

If the shift lever cannot be moved from the P (Park) position while the engine is running and the brake pedal is depressed, the stop lights may not work. Malfunctioning stop lights could cause an accident injuring yourself and others.

Accelerator downshift — in D position —

For passing or hill climbing, depress the accelerator pedal to the floor. This shifts the transmission down into a lower gear, depending on the vehicle speed.

High fluid temperature protection mode

This transmission has a high fluid temperature protection mode. If the fluid temperature becomes too high (for example, when climbing steep grades in high temperatures with heavy loads, such as when towing a trailer), engine power and, under some conditions, vehicle speed will be decreased automatically to reduce the chance of transmission damage. Vehicle speed can be controlled with the accelerator pedal, but the engine and vehicle speed may be limited.

Fail-safe

If the vehicle is driven under extreme conditions, such as excessive wheel spinning and subsequent hard braking, the fail-safe system may be activated. The MIL may come on to indicate the fail-safe mode is activated. For additional information, refer to "Malfunction Indicator Light (MIL)" in the "Instrument and controls" section of this manual. This will occur even if all electrical circuits are functioning properly. In this case, place the ignition switch in the OFF position and wait for 10 seconds. Then push the switch back to the ON position. The vehicle should return to its normal operating condition. If it does not return to its normal operating condition, have a NISSAN dealer check the transmission and repair if necessary.

⚠ WARNING

When the high fluid temperature protection mode or fail-safe operation occurs, vehicle speed may be gradually reduced. The reduced speed may be lower than other traffic, which could increase the chance of a collision. Be especially careful when driving. If necessary, pull to the side of the road at a safe place and allow the transmission to return to normal operation, or have it repaired if necessary.

⚠ WARNING

- **Be sure the parking brake is fully released before driving. Failure to do so can cause brake failure and lead to an accident.**
- **Do not release the parking brake from outside the vehicle.**
- **Do not use the shift lever in place of the parking brake. When parking, be sure the parking brake is fully engaged.**
- **Do not leave children unattended in a vehicle. They could release the parking brake and cause an accident.**

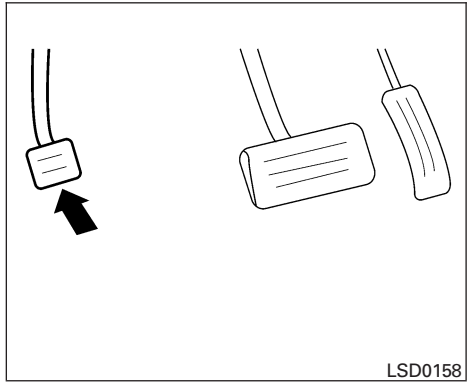

To engage: Firmly depress the parking brake.

To release:

1. Firmly apply the foot brake.
2. Move the shift lever to the P (Park) position.
3. Firmly depress the parking brake pedal and it will release.
4. Before driving, be sure the brake warning light goes out.

BLIND SPOT WARNING (BSW) SYSTEM (if so equipped)

- Blind Spot Warning (BSW) system

⚠ WARNING

- **The BSW system is not a replacement for proper driving procedure and are not designed to prevent contact with vehicles or objects. When changing lanes, always use the side and rear mirrors and turn and look in the direction you will move to ensure it is safe to change lanes. Never rely solely on the BSW system.**
- **The BSW system operates above approximately 20 mph (32 km/h).**

BLIND SPOT WARNING (BSW) SYSTEM

The Blind Spot Warning (BSW) system helps alert the driver of other vehicles in adjacent lanes when changing lanes.

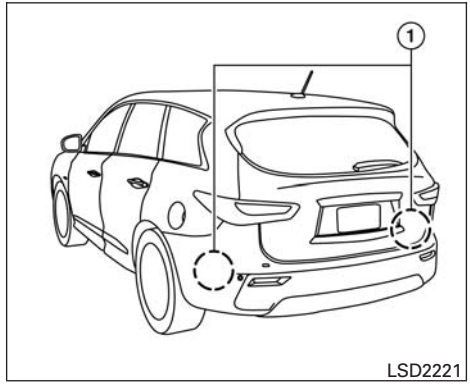

The BSW system uses radar sensors ① installed near the rear bumper to detect other vehicles in an adjacent lane.

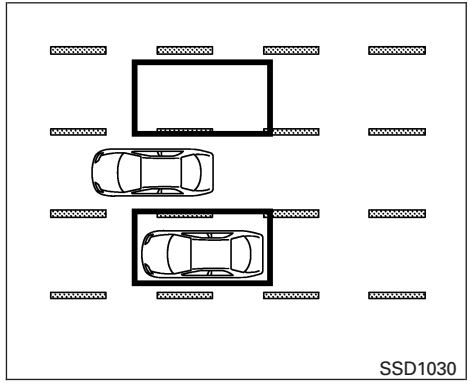

Detection zone

The radar sensors can detect vehicles on either side of your vehicle within the detection zone shown as illustrated. This detection zone starts from the outside mirror of your vehicle and extends approximately 10 ft (3.0 m) behind the rear bumper, and approximately 10 ft (3.0 m) sideways.

The BSW system operates above approximately 20 MPH (32 km/h). If the radar sensors detect vehicles in the detection zone, the Blind Spot Warning indicator light illuminates. If the driver then activates the turn signal, a chime will sound twice and the Blind Spot Warning indicator light will flash.

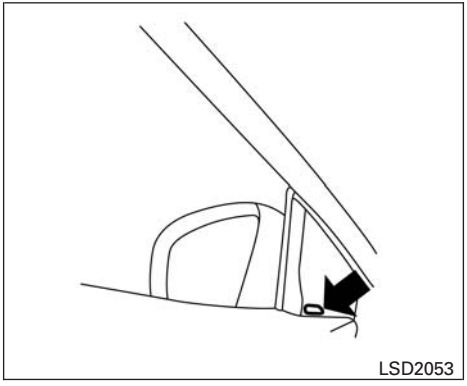

BSW indicator light

BSW SYSTEM OPERATION

If the radar sensors detect a vehicle in the detection zone, the Blind Spot Warning (BSW) indicator light located by the outside mirrors illuminates. If the turn signal is then activated, the system chimes (twice) and the BSW indicator light flashes. The BSW indicator light continues to flash until the detected vehicles leave the detection zone.

The BSW indicator light illuminates for a few seconds when the ignition switch is placed in the ON position.

The brightness of the BSW indicator light is adjusted automatically depending on the brightness of the ambient light.

A chime sounds if the radar sensors have already detected vehicles when the driver activates the turn signal. If a vehicle comes into the detection zone after the driver activates the turn signal, then only the BSW indicator light flashes and no chime sounds. For additional information, refer to “BSW driving situations” in this section.

The BSW system automatically turns on every time the engine is started, as long as it is activated using the settings menu on the vehicle information display.

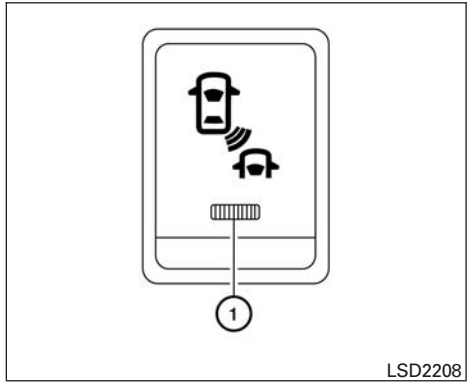

When the BSW and RCTA switch is turned off, the indicator ① on the switch is off. The indicator will also be off if the BSW/RCTA is deactivated.

How to enable/disable the BSW system

Perform the following steps to enable or disable the BSW system.

1. Press the ❑ button until “Settings” displays in the vehicle information display. Use the ▲▼ button to select “Driver Assistance”. Then press the ENTER button.
2. Select “Driver Aids”, and press the ENTER button.

3. To set the BSW/RCTA system to on or off, use the ▲▼ buttons to navigate in the menu and use the ENTER button to select or change an item:
   - Select “Blind Spot” and press the ENTER button.
   - – To turn on the warning, use the ENTER button to check box for “BSW/RCTA system”

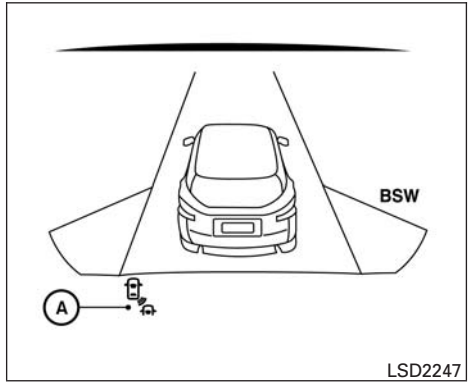

Temporarily not available

When radar blockage is detected, the system will be deactivated automatically. The “Side Radar Obstruction” warning message will appear and the Blind spot indicator (in the meter display) will blink Ⓐ in the vehicle information display. The Blind Spot Warning and Rear Cross Traffic Alert switch indicator will also blink.

The systems are not available until the conditions no longer exist.

The radar sensors may be blocked by temporary ambient conditions such as splashing water, mist or fog. The blocked condition may also be caused by objects such as ice, frost or dirt obstructing the radar sensors.

Action to take:
When the above conditions no longer exist, the system will resume automatically.

Malfunction

When the system malfunctions, it will turn off automatically. The system malfunction warning message with the Blind spot indicator (orange) will appear in the vehicle information display. If the BSW system fails, the RCTA system will also fail.

Action to take:
Stop the vehicle in a safe location, place the vehicle in the P (Park) position, turn the engine off and restart the engine. If the message continues to appear, have the system checked by a NISSAN dealer.

BSW SYSTEM PRECAUTIONS

⚠WARNING

- **The radar sensors may not be able to detect and activate BSW when certain objects are present such as:**
  - **Pedestrians, bicycles, or animals.**
  - **Vehicles such as motorcycles, low height vehicles, or high ground clearance vehicles.**
  - **Oncoming vehicles.**
  - **Vehicles remaining in the detection zone when you accelerate from a stop. For additional information, refer to "BSW driving situations" in this section.**
  - **A vehicle merging into an adjacent lane at a speed approximately the same as your vehicle. For additional information, refer to "BSW driving situations" in this section.**
  - **A vehicle approaching rapidly from behind. For additional information, refer to "BSW driving situations" in this section.**
  - **A vehicle which your vehicle overtakes rapidly. For additional information, refer to "BSW driving situations" in this section.**
  - **A vehicle that passes through the detection zone quickly.**
- **The radar sensors detection zone is designed based on a standard lane width. When driving in a wider lane, the radar sensors may not detect vehicles in an adjacent lane. When driving in a narrow lane, the radar sensors may detect vehicles driving two lanes away.**
- **The radar sensors are designed to ignore most stationary objects, however objects such as guardrails, walls, foliage and parked vehicles may occasionally be detected. The system malfunction warning message with the Blind Spot indicator (orange) will appear in the vehicle information display. This is a normal driving condition.**
- **Severe weather or road spray conditions may reduce the ability of the radar to detect other vehicles.**
- **Excessive noise (e.g. audio system volume, open vehicle window) will interfere with the chime sound, and it may not be heard.**

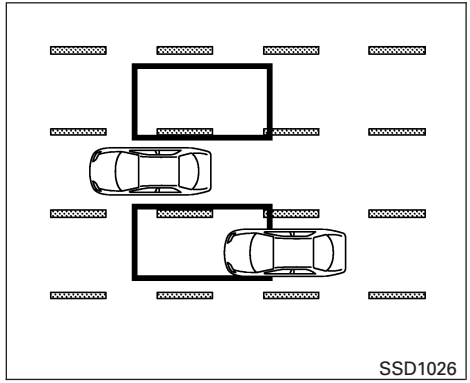

Illustration 1 – Approaching from behind

BSW DRIVING SITUATIONS

Another vehicle approaching from behind

Illustration 1: The Blind Spot Warning indicator light illuminates if a vehicle enters the detection zone from behind in an adjacent lane.

However, if the overtaking vehicle is traveling much faster than your vehicle, the indicator light may not illuminate before the detected vehicle is beside your vehicle. Always use the side and rear mirrors and turn and look in the direction your vehicle will move to ensure it is safe to change lanes.

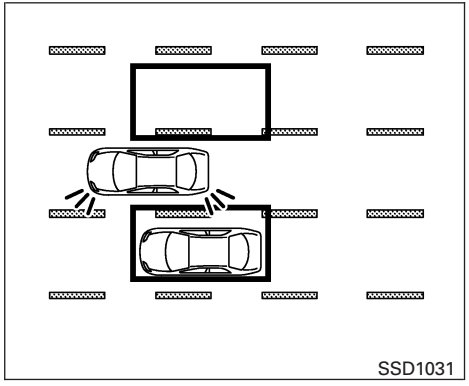

Illustration 2 – Approaching from behind

Illustration 2: If the driver activates the turn signal then the system chimes a sound (twice) and the Blind Spot Warning indicator light flashes.

NOTE:

If the driver activates the turn signal before a vehicle enters the detection zone, the Blind Spot Warning indicator light will flash but no chime will sound when the other vehicle is detected.

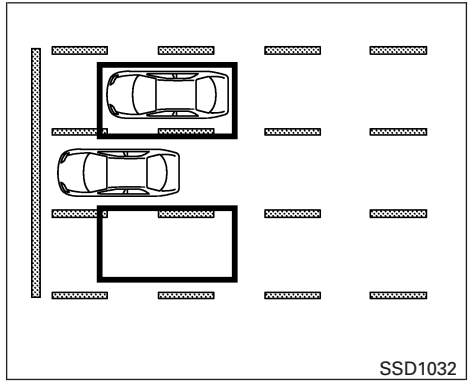

Illustration 3 – Accelerate from a stop

NOTE:

Illustration 3: If you accelerate from a stop with a vehicle in the detection zone, the other vehicle may not be detected.

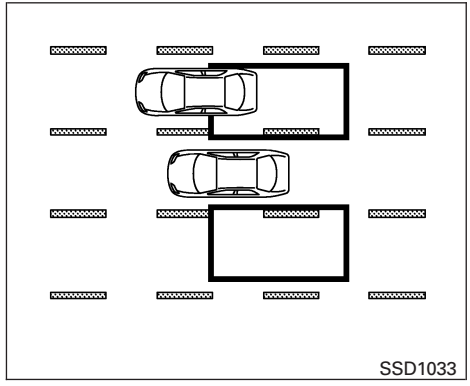

Illustration 4 – Overtaking another vehicle

Overtaking another vehicle

Illustration 4: The Blind Spot Warning indicator light illuminates if you overtake a vehicle and that vehicle stays in the detection zone for approximately 2 seconds.

The radar sensors may not detect slower moving vehicles if they are passed quickly.

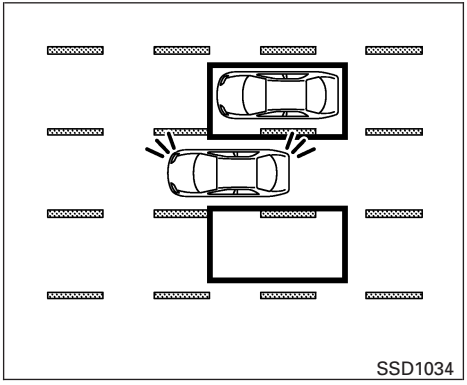

Illustration 5 – Overtaking another vehicle

Illustration 5: If the driver activates the turn signal while another vehicle is in the detection zone, then the system chimes a sound (twice) and the Blind Spot Warning indicator light flashes.

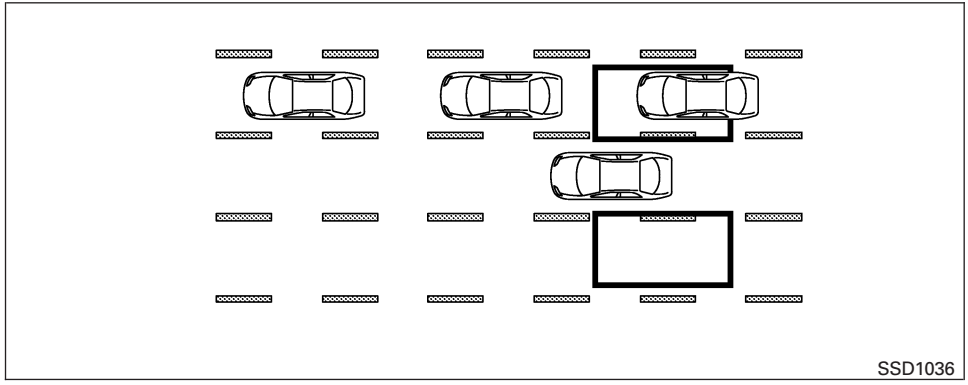

Illustration 6 – Overtaking several vehicles

NOTE:

Illustration 6: When overtaking several vehicles in a row, the vehicles after the first vehicle may not be detected if they are traveling close together.

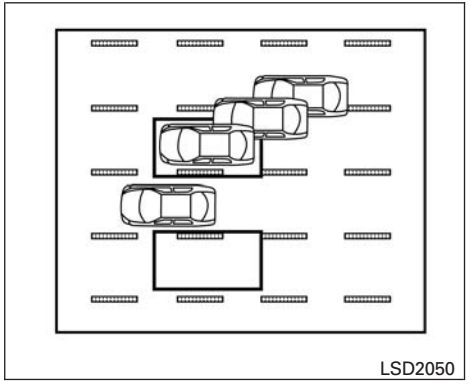

Illustration 7– Entering from the side

Entering from the side

Illustration 7: The Blind Spot Warning indicator light illuminates if a vehicle enters the detection zone from either side.

NOTE:

The radar sensors may not detect a vehicle which is traveling at about the same speed as your vehicle when it enters the detection zone.

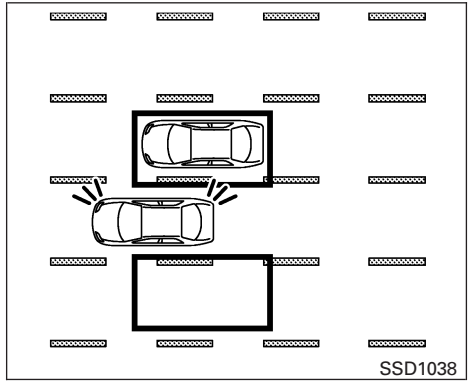

Illustration 8– Entering from the side

Illustration 8: If the driver activates the turn signal, the Blind Spot Warning indicator light flashes and a chime will sound twice.

NOTE:

If the driver activates the turn signal before a vehicle enters the detection zone, the Blind Spot Warning indicator light will flash but no chime will sound when another vehicle is detected.

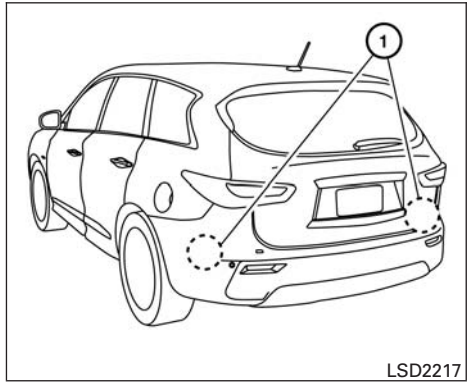

⚠ WARNING

- **The RCTA system is not a replacement for proper driving procedure, is not designed to prevent contact with vehicles or objects. When backing out of parking space, always use the side and rear mirrors and turn and look in the direction you will move. Never rely solely on the RCTA system.**

RCTA SYSTEM OPERATION

The RCTA systems can help alert the driver of an approaching vehicle when the driver is backing out of a parking space.

When the shift position is R (Reverse) and the vehicle speed is less than approximately 5 MPH (8 km/h), the RCTA system operates.

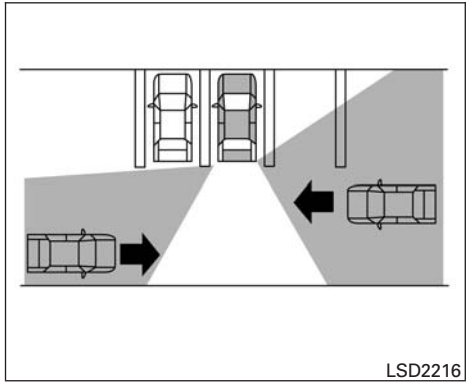

The RCTA system uses radar sensors ① installed on both sides near the rear bumper to detect an approaching vehicle.

The radar sensors ① detect an approaching vehicle from up to approximately 66 ft. (20 m) away.

If the radar detects a vehicle approaching from the side, the system gives visual and audible warnings

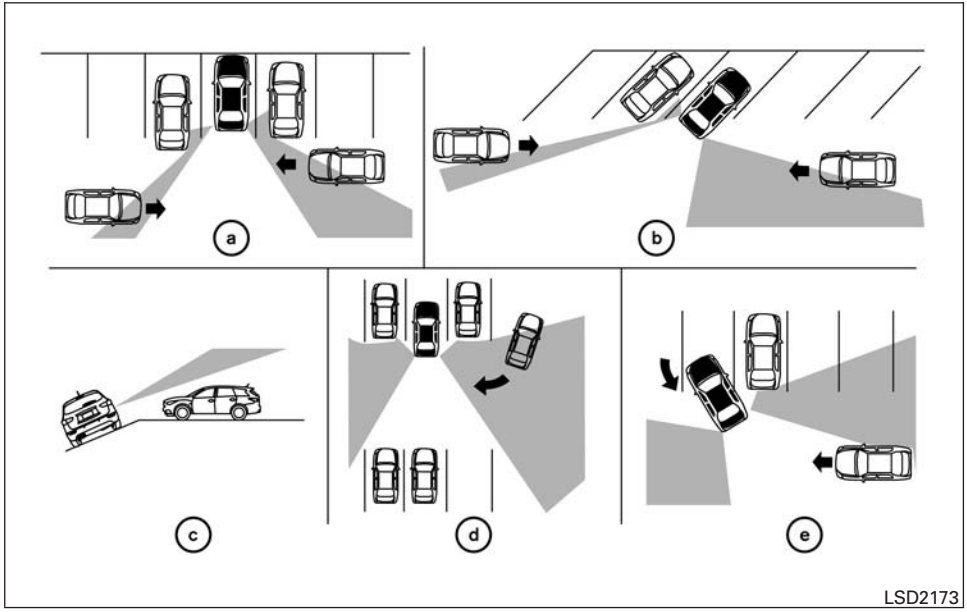

RCTA SYSTEM PRECAUTIONS

WARNING

- **Always check surroundings and turn to check what is behind you before backing up. The radar sensors detect approaching (moving) vehicles. The radar sensors cannot detect every object such as:**
  - **Pedestrians, bicycles, motorcycles, animals or child operated toy vehicles**
  - **A vehicle that passing at speeds greater than approximately 19 MPH (30 km/h)**
  - **A vehicle that passing at speeds lower than approximately 5 MPH (8 km/h)**
- **The radar sensors may not detect approaching vehicles in certain situations:**
  - **Illustration A: When a vehicle parked next to you obstructs the beam of the radar sensor.**
  - **Illustration B: When the vehicle is parked in an angled parking space.**
  - **Illustration C: When the vehicle is parked on inclined ground.**

- **Illustration D: When an approaching vehicle turns into your vehicle's parking lot aisle.**
- **Illustration E: When the angle formed by your vehicle and approaching vehicle is small**

- **The following conditions may reduce the ability of the radar to detect other vehicles:**
  - **Severe weather**
  - **Road spray**
  - **Ice build up on the vehicle**
  - **Frost up on the vehicle**
  - **Dirt build up on the vehicle**
- **Do not attach stickers (including transparent material), install accessories or apply additional paint near the radar sensors. These conditions may reduce the ability of the radar to detect other vehicles**
- **Do not use the RCTA systems when towing a trailer.**
- **Excessive noise (e.g. audio system volume, open vehicle window) will interfere with the chime sound, and it may not be heard.**

If the radar detects an approaching vehicle from the side, the system chimes a sound (single beep), the Blind Spot Warning indicator light on the side of the approaching vehicle flashes.

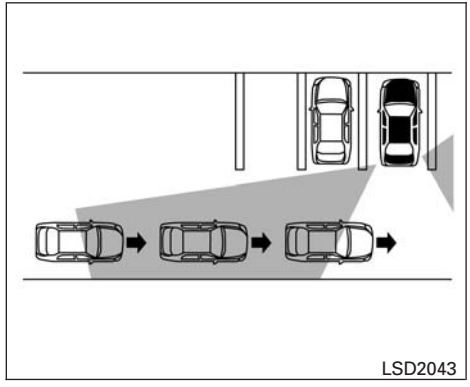

Illustration 1

NOTE:

- In the case of several vehicles approaching in a row (Illustration 1) or in the opposite direction (Illustration 2), a chime may not be sounded by the RCTA system after the first vehicle passes the sensors.

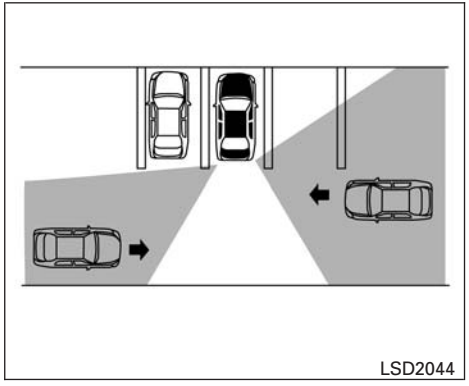

Illustration 2

- The sonar system chime indicating there is a object behind the vehicle has a higher priority than the RCTA chime (single beep) indicating an approaching vehicle. If the RCTA system detects an object behind the vehicle and an approaching vehicle at the same time the following indications are provided:
  - The sonar system chime sounds
  - The Blind Spot Warning indicator light on the side of the approaching vehicle flashes

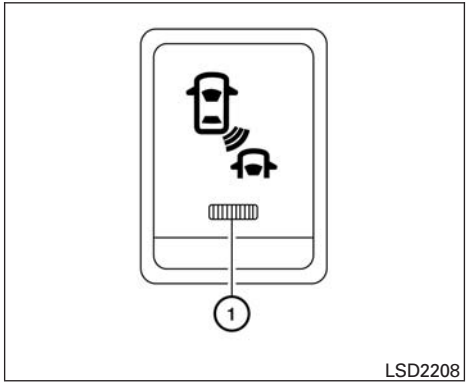

RCTA SYSTEM OPERATION

The BSW/RCTA system can be turned off temporarily by pushing the Blind Spot Warning and Rear Cross Traffic Alert switch ①. The BSW/RCTA system automatically turns on every time the engine is started.

The RCTA system can be turned off permanently by setting in the vehicle information display.

1. Press the ❑ button until “Settings” displays in the vehicle information display. Use the ▲▼ button to select “Driver Assistance”. Then press the ENTER button.
2. Select “Driver Aids”, and press the ENTER button.
3. To set the BSW/RCTA system to on or off, use the buttons to navigate in the menu and use the ENTER button to select or change an item.

- Select “Blind Spot” and press the ENTER button.
  - To turn on the warning, use the ENTER button to check box for “BSW/RCTA”

RCTA temporarily not available

When radar blockage is detected, the system will be deactivated automatically. The “Side Radar Obstruction” warning message will appear and the Blind Spot indicator (white) will blink in the vehicle information display. The Blind Spot Warning and Rear Cross Traffic Alert switch indicators will also blink.

The systems are not available until the conditions no longer exist.

The radar sensors may be blocked by temporary ambient conditions such as splashing water, mist or fog. The blocked condition may also be caused by objects such as ice, frost or dirt obstructing the radar sensors.

Action to take:
When the above conditions no longer exist, the system will resume automatically.

RCTA malfunction

If the RCTA system malfunctions, the system will turn off automatically. The system malfunction warning message with the Blind spot indicator (orange) will appear in the vehicle information display. If the BSW system fails, the RCTA system will also fail.

Action to take:
Stop the vehicle in a safe location, turn the engine off and restart the engine. If the message continues to appear, have the system checked by a NISSAN dealer.

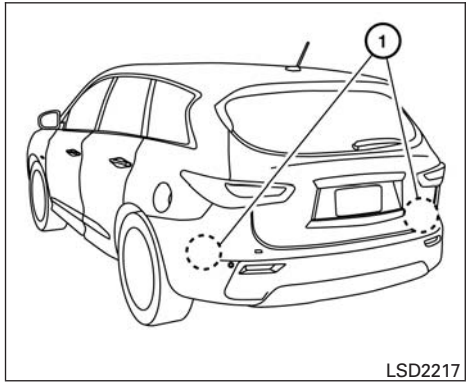

RADAR MAINTENANCE

The two radar sensors ① for the BSW and RCTA systems are located near the rear bumper. Always keep the area near the radar sensors clean.

The radar sensors may be blocked by temporary ambient conditions such as splashing water, mist or fog.

The blocked condition may also be caused by objects such as ice, frost or dirt obstructing the radar sensors.

Check for and remove objects obstructing the area around the radar sensors.

Do not attach stickers (including transparent material), install accessories or apply additional paint near the radar sensors.

Do not strike or damage the area around the radar sensors. Consult a NISSAN dealer if the area around the radar sensors is damaged due to a collision.

Radio frequency statement

This device complies with part 15 of the FCC Rules.

Operation is subject to the following two conditions:

1. **This device may not cause harmful interference, and**
2. **This device must accept any interference received, including interference that may cause undesired operation.**

FCC Warning
Changes or modifications not expressly approved by the party responsible for compliance could void the user's authority to operate the equipment.

Applicable law: Canada 310
This device complies with Industry Canada license-exempt RSS standard(s). Operation is subject to the following two conditions: (1) this device may not cause interference, and (2) this device must accept any interference, including interference that may cause undesired operation of the device.

Frequency of operation: 24.05GHz — 24.25GHz

Output power: less than 20 milliwatts

PRECAUTIONS ON CRUISE CONTROL

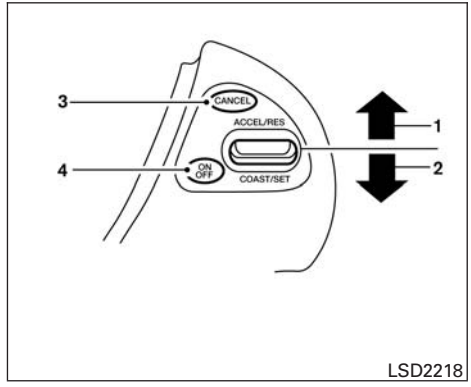

1. ACCEL/RES switch
2. COAST/SET switch
3. CANCEL switch
4. ON·OFF switch

- If the cruise control system malfunctions, it cancels automatically. The SET indicator light in the vehicle information display then blinks to warn the driver. For additional information, refer to “Vehicle information display” in the “Instruments and controls” section of this manual.
- If the SET indicator light blinks, push the cruise control ON·OFF switch off and have the system checked by a NISSAN dealer.

- The SET indicator light may blink when the cruise control ON·OFF switch is pushed ON while pushing the ACCEL/RES, COAST/SET, or CANCEL switch. To properly set the cruise control system, use the following procedures.

⚠ WARNING

Do not use the cruise control when driving under the following conditions:

- **When it is not possible to keep the vehicle at a set speed.**
- **In heavy traffic or in traffic that varies in speed.**
- **On winding or hilly roads.**
- **On slippery roads (rain, snow, ice, etc.).**
- **In very windy areas.**

Doing so could cause a loss of vehicle control and result in an accident.

CRUISE CONTROL OPERATIONS

The cruise control allows driving at a speed between 25 - 89 MPH (40 - 144 km/h) without keeping your foot on the accelerator pedal.

To turn on the cruise control, push the ON·OFF switch on. The CRUISE indicator light in the vehicle information display will illuminate.

To set cruising speed, accelerate the vehicle to the desired speed, push the COAST/SET switch and release it. The SET indicator light in the vehicle information display will illuminate. Take your foot off the accelerator pedal. Your vehicle maintains the set speed.

- **To pass another vehicle,** depress the accelerator pedal. When you release the pedal, the vehicle returns to the previously set speed.
- The vehicle may not maintain the set speed when going up or down steep hills. If this happens, drive without the cruise control.

To cancel the preset speed, use one of the following three methods:

- Push the CANCEL button; the SET indicator light in the vehicle information display goes out.
- Tap the brake pedal; the SET indicator light goes out.
- Push the ON·OFF switch off. Both the CRUISE indicator light and SET indicator light in the vehicle information display go out.

The cruise control is automatically canceled and the SET light in the vehicle information display goes out if:

- You depress the brake pedal while pushing the ACCEL/RES or SET/COAST switch. The preset speed is deleted from memory.
- The vehicle slows down more than 8 MPH (13 km/h) below the set speed.
- You move the shift lever to N (Neutral).

To reset at a faster cruising speed, use one of the following three methods:

- Depress the accelerator pedal. When the vehicle attains the desired speed, push and release the COAST/SET switch.
- Push and hold the ACCEL/RES switch. When the vehicle attains the speed you desire, release the switch.
- Push and release the ACCEL/RES switch. Each time you do this, the set speed increases by about 1 MPH (1.6 km/h).

To reset at a slower cruising speed, use one of the following three methods:

- Lightly tap the brake pedal. When the vehicle attains the desired speed, push the COAST/SET switch and release it.
- Push and hold the COAST/SET switch. Release the switch when the vehicle slows to the desired speed.

- Push and release the COAST/SET switch. Each time you do this, the set speed decreases by about 1 MPH (1.6 km/h).

To resume the preset speed, push and release the ACCEL/RES switch. The vehicle returns to the last set cruising speed when the vehicle speed is over 25 MPH (40 km/h).

BREAK-IN SCHEDULE

CAUTION

During the first 1,200 miles (2,000 km), follow these recommendations to obtain maximum engine performance and ensure the future reliability and economy of your new vehicle. Failure to follow these recommendations may result in shortened engine life and reduced engine performance.

- Avoid driving for long periods at constant speed, either fast or slow, and do not run the engine over 4,000 RPM.
- Do not accelerate at full throttle in any gear.
- Avoid quick starts.
- Avoid hard braking as much as possible.
- Do not tow a trailer for the first 500 mi (805 km). Your engine, axle or other parts could be damaged.

FUEL-EFFICIENT DRIVING TIPS

Follow these easy-to-use Fuel-Efficient Driving Tips to help you achieve the most fuel economy from your vehicle.

1. **Use Smooth Accelerator and Brake Pedal Application**
   - Avoid rapid starts and stops
   - Use smooth, gentle accelerator and brake application whenever possible
   - Maintain constant speed while commuting and coast whenever possible
   - Apply light pressure to the accelerator pedal when driving on flat roads or down hills
   - Avoid pumping the breaks when slowing the vehicle when possible
2. **Maintain Constant Speed**
   - Look ahead to try and anticipate and minimize stops
   - Synchronizing your speed with traffic lights allows you to reduce your number of stops
   - Maintaining a steady speed can minimize red light stops and improve fuel efficiency

3. **Use Air Conditioning (A/C) at Higher Vehicle Speeds**
   - Below 40 MPH (64 km/h), it is more efficient to open windows to cool the vehicle due to reduced engine load
   - Above 40 MPH (64 km/h), it is more efficient to use A/C to cool the vehicle due to increased aerodynamic drag
   - Recirculating the cool air in the cabin when the A/C is on reduces cooling load
   - Turn off air conditioning when it is not necessary
4. **Drive at Economical Speeds and Distances**
   - Observing the speed limit and not exceeding 60 MPH (97 km/h) (where legally allowed) can improve fuel efficiency due to reduced aerodynamic drag
   - Maintaining a safe following distance behind other vehicles reduces unnecessary braking
   - Safely monitoring traffic to anticipate changes in speed permits reduced braking and smooth acceleration changes
   - Select a gear range suitable to road conditions
   - Frequent short-distance driving can reduce fuel economy
5. **Use Cruise Control**
   - Using cruise control during highway driving helps maintain a steady speed
   - Cruise control is particularly effective in providing fuel savings when driving on flat terrains
6. **Plan for the Shortest Route**
   - Utilize a map or navigation system to determine the best route to save time
7. **Avoid Idling**
   - Shutting off your engine when safe for stops exceeding 30–60 seconds saves fuel and reduces emissions
8. **Buy an Automated Pass for Toll Roads**
   - Automated passes permit drivers to use special lanes to maintain cruising speed through the toll and avoid stopping and starting
9. **Winter Warm Up**
   - Limit idling time to minimize impact to fuel economy
   - Vehicles typically need no more than 30 seconds of idling at start-up to effectively circulate the engine oil before driving
   - Your vehicle will reach its ideal operating temperature more quickly while driving versus idling
   - Park your vehicle in moderate ambient temperatures when possible
10. **Keeping your Vehicle Cool**
    - Park your vehicle in a covered parking area or in the shade whenever possible
    - When entering a hot vehicle, opening the windows will help to reduce the inside temperature faster, resulting in reduced demand on your A/C system
11. **Cargo**
    - Avoid transporting unnecessary luggage in the vehicle
    - Avoid carrying luggage in the roof rack which can increase aerodynamic drag
12. **Break-in**
    - your vehicle may need a break-in period for more than 4000 miles to improve the fuel economy
    - Avoid measuring fuel economy within initial 1200 miles

13. **Use D (Drive)**
    - Use the D (Drive) and drive with the Over Drive on as much as possible
    - Driving with the Over Drive OFF or in the L (Low) position may cause the engine to run longer than necessary and reduce fuel economy

NOTE:

In order to display the correct fuel economy, reset the fuel economy meter first.

- Keep your engine tuned up.
- Follow the recommended scheduled maintenance.
- Keep the tires inflated to the correct pressure. Low tire pressure increases tire wear and lowers fuel economy.
- Keep the wheels in correct alignment. Improper alignment increases tire wear and lowers fuel economy.
- Use the recommended viscosity engine oil. For additional information, refer to “Engine oil and oil filter recommendations” in the “Technical and consumer information” section of this manual.

4X4–I SYSTEM OPERATION

⚠ WARNING

- **Do not drive beyond the performance capability of the tires. Accelerating quickly, sharp steering maneuvers or sudden braking may cause loss of control, even with Intelligent 4WD engaged.**
- **For 4WD equipped vehicles, do not attempt to raise 2 wheels off the ground and shift the transmission to any drive or reverse position with the engine running. Doing so may result in drivetrain damage or unexpected vehicle movement which could result in serious personal injury or vehicle damage.**

- **Do not attempt to test an 4WD equipped vehicle on a 2-wheel dynamometer (such as the dynamometers used by some states for emissions testing) or similar equipment even if the other 2 wheels are raised off the ground. Make sure that you inform the test facility personnel that your vehicle is equipped with 4WD before it is placed on a dynamometer. Using the wrong test equipment may result in drivetrain damage or unexpected vehicle movement which could result in serious personal injury or vehicle damage.**

⚠ CAUTION

- **Do not operate the engine on a free roller when any of the wheels are raised.**
- **If you use the free roller, rotate 4 wheels with the same speed without raising any wheels.**
- **If an 4WD warning message is displayed while driving there may be a malfunction in the 4WD system. Reduce the vehicle speed immediately and have your vehicle checked by an NISSAN dealer as soon as possible.**
- **If the 4WD high temperature message is displayed while you are driving, pull off the road in a safe area, and idle the engine. The driving mode will change to 2WD to prevent the 4WD system from malfunctioning. If the warning message turns off, you can drive again.**
- **If the tire size incorrect message is displayed while you are driving, pull off the road in a safe area with the engine idling. Check that all tire sizes are the same, that the tire pressure is correct and that the tires are not excessively worn.**
- **If a warning message continues to be displayed after the above operations, have your vehicle checked by an NISSAN dealer as soon as possible.**

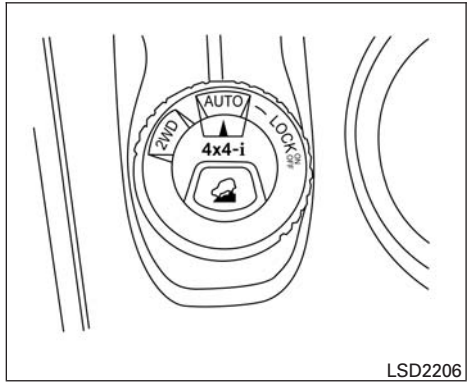

4WD shift switch

The 4WD system is used to select the 2WD, AUTO or LOCK mode depending on the driving conditions.

Turn the 4WD mode switch, located on the center console, to select 2WD, AUTO, or LOCK.

- 2WD – Turn the 4WD mode switch to the 2WD position. The 2WD indicator light in the vehicle information display illuminates.
- AUTO – Turn the 4WD mode switch to the neutral (AUTO) position. The 4WD AUTO indicator light in the vehicle information display illuminates.

- LOCK – To engage the LOCK mode, turn the 4WD mode switch to the LOCK position. The switch will return to the AUTO position automatically and the 4WD LOCK indicator light in the vehicle information display illuminates. To disengage the LOCK mode, turn the switch to the LOCK position again. The switch will return to the AUTO position automatically, and the 4WD LOCK indicator light turns into the AUTO indicator light. The LOCK mode will automatically be cancelled when the ignition switch is turned to the OFF position.

4WD mode	Wheels driven	4WD mode indicator light	Use conditions
2WD	Front only – This mode is used when driving on a normal road *1	2WD	For driving on dry paved roads.
AUTO	Distribution of torque to the front and rear wheels changes automatically depending on road conditions encountered. This results in improved driving stability.	AUTO	For driving on paved or slippery roads.
LOCK	4-Wheel Drive *2 *3	LOCK	For driving on rough roads.

*1 The 2WD mode may change to the 4WD mode automatically depending on the driving conditions.

*2 The LOCK mode will change to the AUTO mode automatically when the vehicle has been driven at a high speed. The 4WD LOCK indicator light turns into the AUTO indicator light.

*3 The LOCK mode will automatically be cancelled when the ignition switch is turned to the OFF position.

4WD shift tips

- If the 4WD mode switch is operated while making a turn, accelerating or decelerating, or if the ignition switch is turned off while in the AUTO or LOCK mode, you may feel a jolt. This is normal.
- The oil temperature of power train parts will increase if the vehicle is continuously operated under conditions where the difference between the front and rear wheels is large (wheel slip), such as when driving the vehicle on rough roads through sand or mud or when freeing a stuck vehicle. In these cases, the 4WD mode changes to the 2WD mode to protect the powertrain parts.
- Brake distance in the 4WD mode is the same as 2WD.

⚠ CAUTION

- **Depending on the driving condition, the 4WD mode may automatically change from 2WD to 4WD even when the 2WD mode is selected. If this occurs while driving, the 4WD mode indicator light will not illuminate.**
- **Do not start the engine with the 4WD mode switch in any mode in the following cases:**
  - **when the vehicle is placed on a free-roller or jacking up the vehicle with the front tires raised and the rear tires on the ground.**
  - **when towing the vehicle with the rear tires raised from the ground.**
- **Operate the 4WD mode switch only when driving straight. Do not operate the 4WD mode switch when making a turn or backing up.**
- **Do not operate the 4WD mode switch with the front wheel spinning.**
- **Engine idling speed is high while warming up the engine. Be especially careful when starting or driving on slippery surfaces with the 4WD mode switch set in the AUTO mode.**

4WD mode indicator lights

The 2WD, 4WD AUTO and LOCK mode indicator lights are located in the vehicle information display.

The 4WD mode indicator lights will display the mode selected by the 4WD mode switch while the engine is running.

The 4WD AUTO indicator light illuminates when selecting the AUTO mode.

The 4WD LOCK indicator light illuminates when selecting the LOCK mode and the 2WD indicator light illuminates when selecting the 2WD mode.

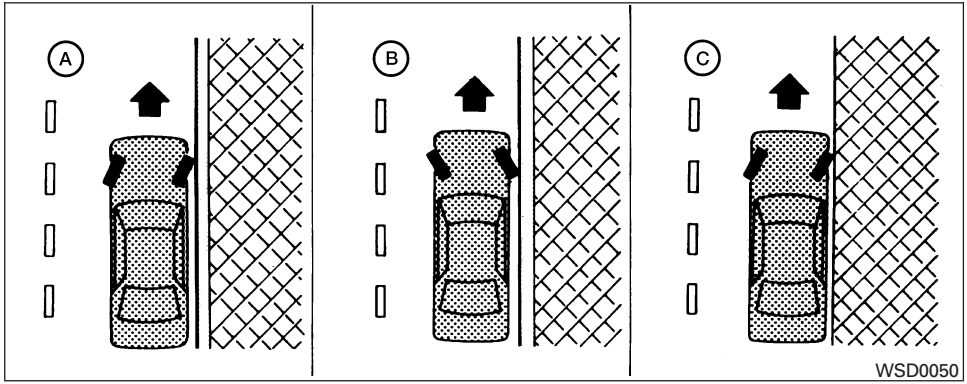

⚠WARNING

- **Do not stop or park the vehicle over flammable materials such as dry grass, waste paper or rags. They may ignite and cause a fire.**
- **Safe parking procedures require that both the parking brake be set and the transmission placed into P (Park). Failure to do so could cause the vehicle to move unexpectedly or roll away and result in an accident. Make sure the shift lever has been pushed as far forward as it can go and cannot be moved without depressing the foot brake pedal.**
- **Never leave the engine running while the vehicle is unattended.**
- **Do not leave children unattended inside the vehicle. They could unknowingly activate switches or controls. Unattended children could become involved in serious accidents.**

1. Firmly apply the parking brake.
2. Move the shift lever to the P (Park) position.
3. To help prevent the vehicle from rolling into traffic when parked on an incline, it is a good practice to turn the wheels as illustrated.

- HEADED DOWNHILL WITH CURB: Ⓐ

  Turn the wheels into the curb and move the vehicle forward until the curb side wheel gently touches the curb.

- HEADED UPHILL WITH CURB: Ⓑ

  Turn the wheels away from the curb and move the vehicle back until the curb side wheel gently touches the curb.

- HEADED UPHILL OR DOWNHILL, NO CURB: Ⓒ

  Turn the wheels toward the side of the road so the vehicle will move away from the center of the road if it moves.

4. Place the ignition switch in the LOCK position.

⚠WARNING

- **If the engine is not running or is turned off while driving, the power assist for the steering will not work. Steering will be harder to operate.**
- **When the power steering warning light illuminates with the engine running, there will be no power assist for the steering. You will still have control of the vehicle but the steering will be harder to operate. Have the power steering system checked by a NISSAN dealer.**

The power steering system is designed to provide power assist while driving to operate the steering wheel with light force.

When the steering wheel is operated repeatedly or continuously while parking or driving at a very low speed, the power assist for the steering wheel will be reduced. This is to prevent overheating of the power steering system and protect it from getting damaged. While the power assist is reduced, steering wheel operation will become heavy. If the steering wheel operation is still performed, the power steering may stop and the power steering warning light will illuminate. In a safe location, stop the engine and push the ignition switch to the OFF position. The temperature of the power steering system will go down after a period of time and the power assist level will return to normal after starting the engine. The power steering warning light will go off. Avoid repeating such steering wheel operations that could cause the power steering system to overheat.

You may hear a noise from the front of the vehicle when the steering wheel is operated. This is a normal operational noise and is not a malfunction.

If the electric power steering warning light **PS** illuminates while the engine is running, it may indicate the power steering system is not functioning properly and may need servicing. Have the power steering system checked by a NISSAN dealer.

When the electric power steering warning light illuminates with the engine running, there will be no power assist for the steering but you will still have control of the vehicle. At this time, greater steering effort is required to operate the steering wheel, especially in sharp turns and at low speeds.

For additional information, refer to “Power steering warning light” in the “Instruments and controls” section of this manual.

⚠WARNING

Your brake system may not be working properly if the hydraulic brake warning light and the electronically controlled brake system warning light is on. Driving could be dangerous. If you judge it to be safe, drive carefully to the nearest service station for repairs. Otherwise, have your vehicle towed because driving it could be dangerous.

BRAKE PRECAUTIONS

Vacuum-assisted brakes

The brake booster aids braking by using engine vacuum. If the hybrid system is turned off, you can stop the vehicle by depressing the brake pedal. However, greater foot pressure on the brake pedal will be required to stop the vehicle and stopping distance will be longer.

Using the brakes

Avoid resting your foot on the brake pedal while driving. This will overheat the brakes, wear out the brake pads faster, and reduce gas mileage.

To help reduce brake wear and to prevent the brakes from overheating, reduce speed and downshift to a lower gear before going down a slope or long grade. Overheated brakes may reduce braking performance and could result in loss of vehicle control.

When applying the brakes, you may hear a sound coming from the braking system. This is normal.

⚠ WARNING

While driving on a slippery surface, be careful when braking, accelerating or downshifting. Abrupt braking or accelerating could cause the wheels to skid and result in an accident.

ANTI-LOCK BRAKING SYSTEM (ABS)

⚠ WARNING

- **The Anti-lock Braking System (ABS) is a sophisticated device, but it cannot prevent accidents resulting from careless or dangerous driving techniques. It can help maintain vehicle control during braking on slippery surfaces. Remember that stopping distances on slippery surfaces will be longer than on normal surfaces even with ABS. Stopping distances may also be longer on rough, gravel or snow covered roads, or if you are using tire chains. Always maintain a safe distance from the vehicle in front of you. Ultimately, the driver is responsible for safety.**
- **Tire type and condition may also affect braking effectiveness.**
  - **When replacing tires, install the specified size of tires on all 4 wheels.**
  - **When installing a spare tire, make sure that it is the proper size and type as specified on the Tire and Loading Information label. For additional information, refer to “Tire and Loading Information label” in the “Technical and consumer information” section of this manual.**
  - **For additional information, refer to “Wheels and tires” in the “Maintenance and do-it-yourself” section of this manual.**

The Anti-lock Braking System (ABS) controls the brakes so the wheels do not lock during hard braking or when braking on slippery surfaces. The system detects the rotation speed at each wheel and varies the brake fluid pressure to prevent each wheel from locking and sliding. By preventing each wheel from locking, the system helps the driver maintain steering control and helps to minimize swerving and spinning on slippery surfaces.

Using the system

Depress the brake pedal and hold it down. Depress the brake pedal with firm steady pressure, but do not pump the brakes. The ABS will operate to prevent the wheels from locking up. Steer the vehicle to avoid obstacles.

⚠ WARNING

Do not pump the brake pedal. Doing so may result in increased stopping distances.

Self-test feature

The ABS includes electronic sensors, electric pumps, hydraulic solenoids and a computer. The computer has a built-in diagnostic feature that tests the system each time you start the engine and move the vehicle at a low speed in forward or reverse. When the self-test occurs, you may hear a “clunk” noise and/or feel a pulsation in the brake pedal. This is normal and does not indicate a malfunction. If the computer senses a malfunction, it switches the ABS off and illuminates the ABS warning light on the instrument panel. The brake system then operates normally, but without anti-lock assistance.

If the ABS warning light illuminates during the self-test or while driving, have the vehicle checked by a NISSAN dealer.

Normal operation

The ABS operates at speeds above 3 - 6 MPH (5 - 10 km/h). The speed varies according to road conditions.

When the ABS senses that one or more wheels are close to locking up, the actuator rapidly applies and releases hydraulic pressure. This action is similar to pumping the brakes very quickly. You may feel a pulsation in the brake pedal and hear a noise from under the hood or feel a vibration from the actuator when it is operating. This is normal and indicates that the ABS is operating properly. However, the pulsation may indicate that road conditions are hazardous and extra care is required while driving.

BRAKE ASSIST

When the force applied to the brake pedal exceeds a certain level, the brake assist is activated generating greater braking force than a conventional brake booster even with light pedal force.

⚠ WARNING

The brake assist is only an aid to assist braking operation and is not a collision warning or avoidance device. it is the drivers responsibility to stay alert, drive safely and be in control of the vehicle at all times.

VEHICLE DYNAMIC CONTROL (VDC) SYSTEM

The Vehicle Dynamic Control (VDC) system uses various sensors to monitor driver inputs and vehicle motion. Under certain driving conditions, the VDC System helps to perform the following functions:

- Controls brake pressure to reduce wheel slip on one slipping drive wheel so power is transferred to a non slipping drive wheel on the same axle.
- Controls brake pressure and engine output to reduce drive wheel slip based on vehicle speed (traction control function).
- Controls brake pressure at individual wheels and engine output to help the driver maintain control of the vehicle in the following conditions:
  - understeer (vehicle tends to not follow the steered path despite increased steering input)
  - oversteer (vehicle tends to spin due to certain road or driving conditions)

The VDC system can help the driver to maintain control of the vehicle, but it cannot prevent loss of vehicle control in all driving situations.

When the VDC system operates, the indicator in the instrument panel flashes so note the following:

- The road may be slippery or the system may determine some action is required to help keep the vehicle on the steered path.
- You may feel a pulsation in the brake pedal and hear a noise or vibration from under the hood. This is normal and indicates that the VDC system is working properly.
- Adjust your speed and driving to the road conditions.

For additional information, refer to “Slip indicator light” and ”Vehicle Dynamic Control (VDC) OFF indicator light” in the ”Instruments and controls” section of this manual.

If a malfunction occurs in the system, the and indicator lights come on in the instrument panel. The VDC system automatically turns off when these indicator lights are on.

The VDC OFF switch is used to turn off the VDC system. The indicator illuminates to indicate the VDC system is off.

When the VDC switch is used to turn off the system, the VDC system still operates to prevent one drive wheel from slipping by transferring power to a non slipping drive wheel. The indicator flashes if this occurs. All other VDC functions are off and the indicator will not flash.

The VDC system is automatically reset to on when the ignition switch is placed in the OFF position then back to the ON position.

The computer has a built in diagnostic feature that tests the system each time you start the engine and move the vehicle forward or in reverse at a slow speed. When the self-test occurs, you may hear a clunk noise and/or feel a pulsation in the brake pedal. This is normal and is not an indication of a malfunction.

WARNING

- **The VDC system is designed to help the driver maintain stability but does not prevent accidents due to abrupt steering operation at high speeds or by careless or dangerous driving techniques. Reduce vehicle speed and be especially careful when driving and cornering on slippery surfaces and always drive carefully.**
- **Do not modify the vehicle’s suspension. If suspension parts such as shock absorbers, struts, springs, stabilizer bars, bushings and wheels are not NISSAN recommended for your vehicle or are extremely deteriorated, the VDC system may not operate properly. This could adversely affect vehicle handling performance, and the indicator may flash or both the and indicator lights may illuminate.**
- **If brake related parts such as brake pads, rotors and calipers are not NISSAN recommended or are extremely deteriorated, the VDC system may not operate properly and both the and the indicator lights may illuminate.**
- **If engine control related parts are not NISSAN recommended or are extremely deteriorated, both the and indicator lights may illuminate.**

- **When driving on extremely inclined surfaces such as higher banked corners, the VDC system may not operate properly and the indicator may flash or both the and indicator lights may illuminate. Do not drive on these types of roads.**
- **When driving on an unstable surface such as a turntable, ferry, elevator or ramp, the indicator may flash or both the and indicator lights may illuminate. This is not a malfunction. Restart the engine after driving onto a stable surface.**
- **If wheels or tires other than the NISSAN recommended ones are used, the VDC system may not operate properly and the indicator may flash or both the and indicator lights may illuminate.**
- **The VDC system is not a substitute for winter tires or tire chains on a snow covered road.**

RISE-UP AND BUILD-UP

The system gradually adjusts braking power during normal braking to help provide an enhanced brake feel.

BRAKE FORCE DISTRIBUTION

During braking while driving through turns, the system optimizes the distribution of force to each of the four wheels depending on the radius of the turn.

WARNING

- **The VDC system is designed to help the driver maintain stability but does not prevent accidents due to abrupt steering operation at high speeds or by careless or dangerous driving techniques. Reduce vehicle speed and be especially careful when driving and cornering on slippery surfaces and always drive carefully.**
- **The active trace control and brake force distribution systems may not be effective depending on the driving condition. Always drive carefully and attentively.**
- **Do not modify the vehicle's suspension. If suspension parts such as shock absorbers, struts, springs, stabilizer bars, bushings and wheels are not NISSAN recommended for your vehicle or are extremely deteriorated, the VDC system may not operate properly. This could adversely affect vehicle handling performance, and the VDC warning light may illuminate.**
- **If brake related parts such as brake pads, rotors and calipers are not NISSAN recommended or are extremely deteriorated, the VDC system may not operate properly and the VDC warning light may illuminate.**
- **If engine control related parts are not NISSAN recommended or are extremely deteriorated, the VDC warning light may illuminate.**
- **When driving on extremely inclined surfaces such as higher banked corners, the VDC system may not operate properly and the VDC warning light may illuminate. Do not drive on these types of roads.**

- **When driving on an unstable surface such as a turntable, ferry, elevator or ramp, the VDC warning light may illuminate. This is not a malfunction. Restart the engine after driving onto a stable surface.**
- **If wheels or tires other than the NISSAN recommended ones are used, the VDC system may not operate properly and the VDC warning light may illuminate.**
- **The VDC system is not a substitute for winter tires or tire chains on a snow covered road.**

HILL DESCENT CONTROL SYSTEM (if so equipped)

⚠ WARNING

- **Never rely solely on the hill descent control system to control vehicle speed when driving on steep downhill grades. Always drive carefully and attentively when using the hill descent control system and decelerate the vehicle speed by depressing the brake pedal if necessary. Be especially careful when driving on frozen, muddy or extremely steep downhill roads. Failure to control vehicle speed may result in a loss of control of the vehicle and possible serious injury or death.**
- **The hill descent control may not control the vehicle speed on a hill under all load or road conditions. Always be prepared to depress the brake pedal to control vehicle speed. Failure to do so may result in a collision or serious personal injury.**

The hill descent control system can only be activated when the 4WD LOCK switch is engaged.

The hill descent control system helps maintain vehicle speed when driving under 15 MPH (25 km/h) on steeper downhill grades. Hill descent control is useful when engine braking alone cannot control vehicle speed. Hill descent control applies the vehicle brakes to control vehicle speed allowing the driver to concentrate on steering while reducing the burden of brake and accelerator operation.

If the hill descent control light is blinking, the hill descent control is engaged; however, the hill descent control will not control the vehicle speed.

- When additional braking is required on steep downhill roads, activate the hill descent control system by pushing the switch ON. For additional information, refer to “Hill descent control switch (if so equipped)” in the “Instruments and controls” section of this manual.
- Once the system is activated, the indicator light will remain on in the instrument panel. For additional information, refer to “Hill descent control system on indicator light” in the “Instruments and controls” section of this manual.

If the accelerator or brake pedal is depressed while the hill descent control system is on, the system will stop operating temporarily. As soon as the accelerator or brake pedal is released, the hill descent control system begins to function again if the hill descent control operating conditions are fulfilled.

For the best results, when descending steep downhill grades, the hill descent control switch should be ON and the shift lever in L (Low gear) for engine braking.

HILL START ASSIST SYSTEM

⚠ WARNING

- **Never rely solely on the hill start assist system to prevent the vehicle from moving backward on a hill. Always drive carefully and attentively. Depress the brake pedal when the vehicle is stopped on a steep hill. Be especially careful when stopped on a hill on frozen or muddy roads. Failure to prevent the vehicle from rolling backwards may result in a loss of control of the vehicle and possible serious injury or death.**
- **The hill start assist system is not designed to hold the vehicle at a standstill on a hill. Depress the brake pedal when the vehicle is stopped on a steep hill. Failure to do so may cause the vehicle to roll backwards and may result in a collision or serious personal injury.**
- **The hill start assist may not prevent the vehicle from rolling backwards on a hill under all load or road conditions. Always be prepared to depress the brake pedal to prevent the vehicle from rolling backwards. Failure to do so may result in a collision or serious personal injury.**

The hill start assist system automatically keeps the brakes applied to help prevent the vehicle from rolling backward in the time it takes the driver to release the brake pedal and apply the accelerator when the vehicle is stopped on a hill.

Hill start assist will operate automatically under the following conditions:

- The shift lever is shifted to a forward or reverse gear.
- The vehicle is stopped completely on a hill by applying the brake.

The maximum holding time is 2 seconds. After 2 seconds the vehicle will begin to roll back and hill start assist will stop operating completely.

Hill start assist will not operate when the shift lever is shifted into N (Neutral) or P (Park) or on a flat and level road.

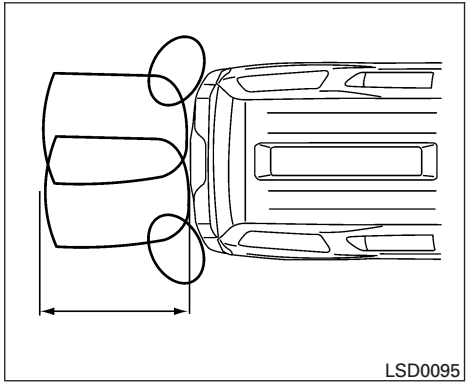

⚠ WARNING

- **Always turn and look back before backing up. The RSS is not a substitute for proper backing procedures.**
- **Read and understand the limitations of the rear sonar system as contained in this section. Inclement weather may affect the function of the RSS; this may include reduced performance or a false activation.**
- **This system is not designed to prevent contact with small or moving objects.**
- **The system is designed as an aid to the driver in detecting large stationary objects to help avoid damaging the vehicle. The system will not detect small objects below the bumper, and may not detect objects close to the bumper or on the ground.**
- **If your vehicle sustains damage to the rear bumper fascia, leaving it misaligned or bent, the sensing zone may be altered causing inaccurate measurement of obstacles or false alarms.**

The RSS sounds a tone to warn the driver of obstacles near the rear bumper when the shift lever is in R (Reverse). The system may not detect objects at speeds above 3 mph (5 km/h) and may not detect certain angular or moving objects.

The RSS detects obstacles up to 5.9 ft (1.8 m) from the rear bumper with a decreased coverage area at the outer corners of the bumper, (refer to the illustration for approximate zone coverage areas). As you move closer to the obstacle, the rate of the tone increases. When the obstacle is less than 10 in (25.0 cm) away, the tone will sound continuously. If the RSS detects a stationary or receding object further than 10 in. (25.0 cm) from the side of the vehicle, the tone will sound for only 3 seconds. Once the system detects an object approaching, the tone will sound again.

The RSS automatically turns on when the shift lever is placed in R (Reverse) and the ignition switch is placed in the ON position. To turn the RSS off, the ignition switch must be placed in the ON position. If the indicator light illuminates when the RSS is not turned off, it may indicate a malfunction in the RSS.

Keep the RSS sensors (located on the rear bumper fascia) free from snow, ice and large accumulations of dirt (do not clean the sensors with sharp objects). If the sensors are covered, it will affect the accuracy of the RSS.

FREEING A FROZEN DOOR LOCK

To prevent a door lock from freezing, apply deicer through the key hole. If the lock becomes frozen, heat the key before inserting it into the key hole, or use the NISSAN Intelligent Key®.

ANTIFREEZE

In the winter when it is anticipated that the temperature will drop below 32°F (0°C), check the antifreeze to assure proper winter protection. For additional information, refer to "Engine cooling system" in the "Maintenance and do-it-yourself" section of this manual.

BATTERY

If the battery is not fully charged during extremely cold weather conditions, the battery fluid may freeze and damage the battery. To maintain maximum efficiency, the battery should be checked regularly. For additional information, refer to "Battery" in the "Maintenance and do-it-yourself" section of this manual.

DRAINING OF COOLANT WATER

If the vehicle is to be left outside without antifreeze, drain the cooling system, including the engine block. Refill before operating the vehicle. For additional information, refer to "Changing engine coolant" in the "Maintenance and do-it-yourself" section of this manual.

TIRE EQUIPMENT

1. SUMMER tires have a tread designed to provide superior performance on dry pavement. However, the performance of these tires will be substantially reduced in snowy and icy conditions. If you operate your vehicle on snowy or icy roads, NISSAN recommends the use of MUD & SNOW or ALL SEASON TIRES on all four wheels. Please consult a NISSAN dealer for the tire type, size, speed rating and availability information.
2. For additional traction on icy roads, studded tires may be used. However, some U.S. states and Canadian provinces prohibit their use. Check local, state and provincial laws before installing studded tires.

Skid and traction capabilities of studded snow tires on wet or dry surfaces may be poorer than that of non-studded snow tires.

3. Tire chains may be used. For additional information, refer to "Tire chains" in the "Maintenance and do-it-yourself" section of this manual.

SPECIAL WINTER EQUIPMENT

It is recommended that the following items be carried in the vehicle during winter:

- A scraper and stiff-bristled brush to remove ice and snow from the windows and wiper blades.
- A sturdy, flat board to be placed under the jack to give it firm support.
- A shovel to dig the vehicle out of snowdrifts.
- Extra washer fluid to refill the windshield-washer fluid reservoir.

DRIVING ON SNOW OR ICE

⚠ WARNING

- **Wet ice (32°F, 0°C and freezing rain), very cold snow or ice can be slick and very hard to drive on. The vehicle will have much less traction or "grip" under these conditions. Try to avoid driving on wet ice until the road is salted or sanded.**
- **Whatever the condition, drive with caution. Accelerate and slow down with care. If accelerating or downshifting too fast, the drive wheels will lose even more traction.**

- **Allow more stopping distance under these conditions. Braking should be started sooner than on dry pavement.**
- **Allow greater following distances on slippery roads.**
- **Watch for slippery spots (glare ice). These may appear on an otherwise clear road in shaded areas. If a patch of ice is seen ahead, brake before reaching it. Try not to brake while on the ice, and avoid any sudden steering maneuvers.**
- **Do not use the cruise control on slippery roads.**
- **Snow can trap dangerous exhaust gases under your vehicle. Keep snow clear of the exhaust pipe and from around your vehicle.**

ENGINE BLOCK HEATER (if so equipped)

Engine block heaters are used to assist with cold temperature starting.

The engine block heater should be used when the outside temperature is 20°F (-7°C) or lower.

⚠ WARNING

- **Do not use your engine block heater with an ungrounded electrical system or a 2-pronged adapter. You can be seriously injured by an electrical shock if you use an ungrounded connection.**
- **Disconnect and properly store the engine block heater cord before starting the engine. Damage to the cord could result in an electrical shock and can cause serious injury.**
- **Use a heavy-duty 3-wire, 3-pronged extension cord rated for at least 10 A. Plug the extension cord into a Ground Fault Interrupt (GFI) protected, grounded 110-VAC outlet. Failure to use the proper extension cord or a grounded outlet can result in a fire or electrical shock and cause serious personal injury.**

To use the engine block heater:

1. Turn the engine off.
2. Open the hood and unwrap the engine block heater cord.
3. Plug the engine block heater cord into a grounded 3-wire, 3-pronged extension cord.
4. Plug the extension cord into a Ground Fault Interrupt (GFI) protected, grounded 110-volt AC (VAC) outlet.
5. The engine block heater must be plugged in for at least 2 - 4 hours, depending on outside temperatures, to properly warm the engine coolant. Use an appropriate timer to turn the engine block heater on.
6. Before starting the engine, unplug and properly store the cord to keep it away from moving parts.

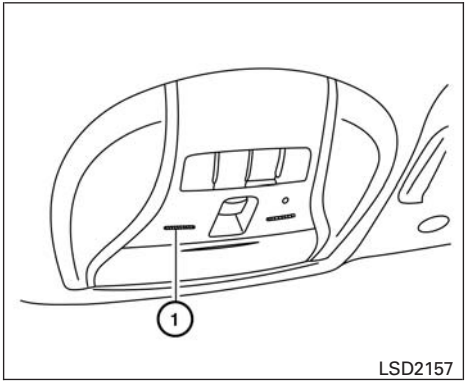

Front Microphone

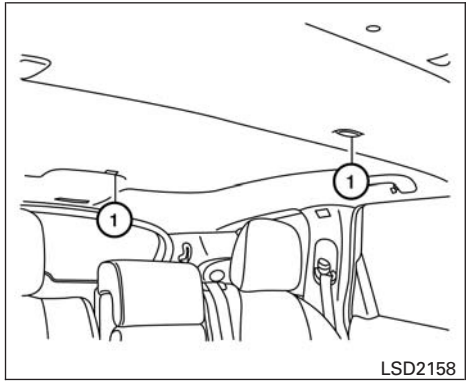

Rear Microphone

This system uses microphones ① located inside the vehicle to detect engine booming noise. The system then automatically generates a noise cancelling sound through the speakers and woofer (if so equipped) to reduce engine booming noise.

NOTE:

To operate the active noise control system properly:

- Do not cover the speakers or woofer (if so equipped).
- Do not cover the microphones.
- Do not change or modify speakers including the woofer and any audio related components such as the amplifier.
- Do not make any modification including sound deadening or modifications around the microphones or speakers.

6 In case of emergency

Hazard warning flasher switch 6-2
Emergency engine shut off 6-2
Flat tire 6-3
Tire Pressure Monitoring System (TPMS). 6-3
Changing a flat tire 6-3
Hybrid system stops operating while driving 6-9
If the vehicle does not start 6-10
Confirm battery is discharged 6-10
Emergency Start 6-10
Jump starting 6-11
Push starting. 6-13
If your vehicle overheats 6-13
Towing your vehicle 6-14
Towing recommended by NISSAN 6-14
Vehicle recovery (freeing a stuck vehicle). 6-16

HAZARD WARNING FLASHER SWITCH

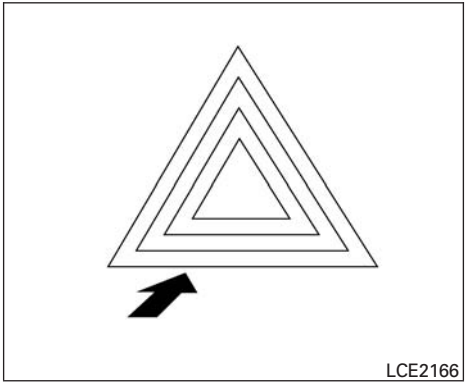

Push the switch on to warn other drivers when you must stop or park under emergency conditions. All turn signal lights flash.

⚠ WARNING

- **If stopping for an emergency, be sure to move the vehicle well off the road.**
- **Do not use the hazard warning flashers while moving on the highway unless unusual circumstances force you to drive so slowly that your vehicle might become a hazard to other traffic.**
- **Turn signals do not work when the hazard warning flasher lights are on.**

The flashers will operate with the ignition switch placed in any position.

Some jurisdictions may prohibit the use of the hazard warning flasher switch while driving.

EMERGENCY ENGINE SHUT OFF

To shut off the engine in an emergency situation while driving, perform the following procedure:

– Rapidly push the push-button ignition switch three consecutive times in less than 1.5 seconds, or

– Push and hold the push-button ignition switch for more than 2 seconds.

TIRE PRESSURE MONITORING SYSTEM (TPMS)

This vehicle is equipped with TPMS. It monitors tire pressure of all tires except the spare. When the low tire pressure warning light is lit, and the Tire Pressure Low - Add Air warning appears in the vehicle information display, one or more of your tires is significantly under-inflated. If equipped, the system also displays pressure of all tires (except the spare tire) on the display screen by sending a signal from a sensor that is installed in each wheel. If the vehicle is being driven with low tire pressure, the TPMS will activate and warn you of it by the low tire pressure warning light. This system will activate only when the vehicle is driven at speeds above 16 mph (25 km/h). For additional information, refer to "Warning/indicator lights and audible reminders" in the "Instruments and controls" section and "Tire Pressure Monitoring System (TPMS)" in the "Starting and driving" section of this manual.

⚠ WARNING

- **Radio waves could adversely affect electric medical equipment. Those who use a pacemaker should contact the electric medical equipment manufacturer for the possible influences before use.**
- **If the low tire pressure warning light illuminates while driving, avoid sudden steering maneuvers or abrupt braking, reduce vehicle speed, pull off the road to a safe location and stop the vehicle as soon as possible. Driving with under-inflated tires may permanently damage the tires and increase the likelihood of tire failure. Serious vehicle damage could occur and may lead to an accident and could result in serious personal injury. Check the tire pressure for all four tires. Adjust the tire pressure to the recommended COLD tire pressure shown on the Tire and Loading Information label to turn the low tire pressure warning light OFF. If you have a flat tire, replace it with a spare tire as soon as possible.**
- **When a spare tire is mounted or a wheel is replaced, tire pressure will not be indicated, the TPMS will not function and the low tire pressure warning light will flash for approximately 1 minute. The light will remain on after 1 minute. Contact your NISSAN dealer as soon as possible for tire replacement and/or system resetting.**
- **Replacing tires with those not originally specified by NISSAN could affect the proper operation of the TPMS.**
- **Do not inject any tire liquid or aerosol tire sealant into the tires, as this may cause a malfunction of the tire pressure sensors.**

CHANGING A FLAT TIRE

If you have a flat tire, follow the instructions below:

Stopping the vehicle

1. Safely move the vehicle off the road and away from traffic.
2. Turn on the hazard warning flashers.
3. Park on a level surface and apply the parking brake. Move the shift lever to P (Park).
4. Turn off the engine.
5. Raise the hood to warn other traffic and to signal professional road assistance personnel that you need assistance.
6. Have all passengers get out of the vehicle and stand in a safe place, away from traffic and clear of the vehicle.

⚠ WARNING

- **Make sure the parking brake is securely applied and the CVT is shifted into P (Park).**
- **Never change tires when the vehicle is on a slope, ice or slippery areas. This is hazardous.**
- **Never change tires if oncoming traffic is close to your vehicle. Wait for professional road assistance.**

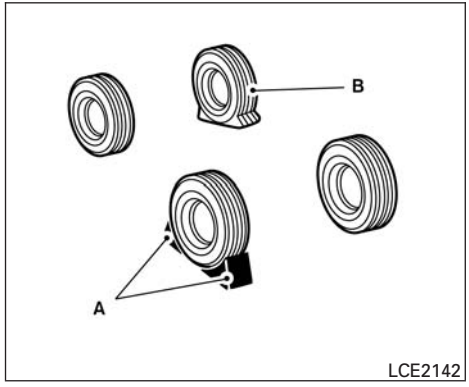

A. Blocks

B. Flat tire

Blocking wheels

Place suitable blocks at both the front and back of the wheel diagonally opposite the flat tire to prevent the vehicle from moving when it is jacked up.

⚠ WARNING

Be sure to block the wheel as the vehicle may move and result in personal injury.

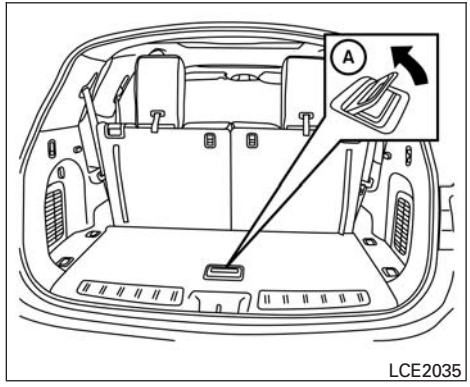

Getting the spare tire and tools

Open the liftgate, and lift the luggage board in the cargo area using the handle Ⓐ.

Please follow the procedure below to remove the tools and spare tire:

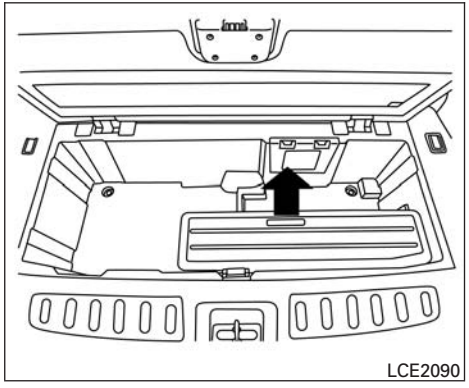

1. Remove the jack and tool kit cover by lifting up using the handles.

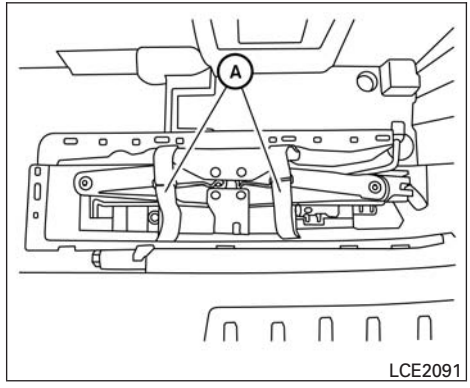

2. Remove the tool kit.
   - To release the tool kit, release the straps Ⓐ.

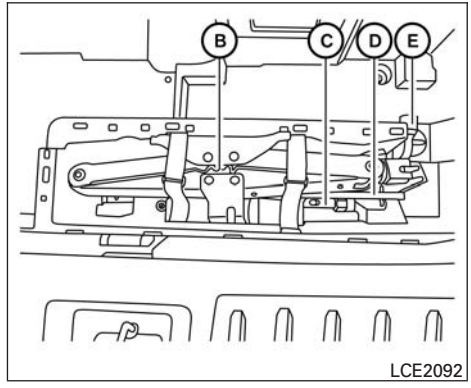

3. Remove the jack Ⓑ, winch socket Ⓒ, extension Ⓓ, and wheel nut wrench Ⓔ.

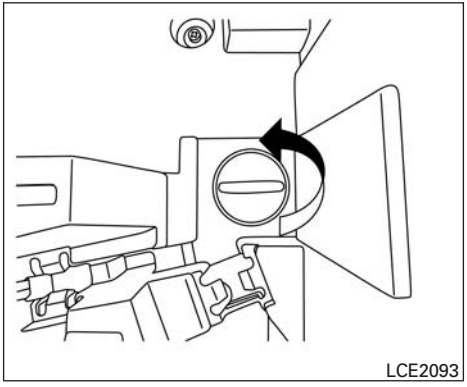

4. The lowering mechanism for the spare tire is located on the passenger side of the cargo area. Remove the cover to access the spare tire winch.

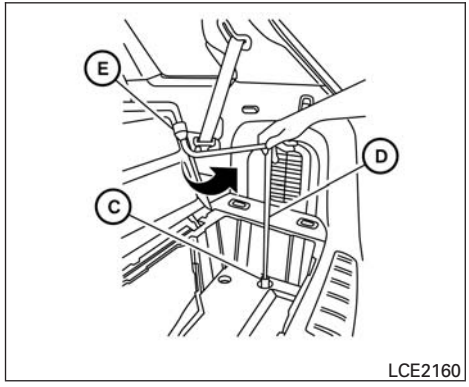

5. Place the spare tire winch socket Ⓒ onto the lowering mechanism nut.
6. To lower the spare tire, insert the wheel nut wrench Ⓔ to the extension Ⓓ and insert the T-shaped end to the winch socket Ⓒ and rotate counterclockwise.
7. After removing the spare tire from under the vehicle, be sure to crank the cable up to stow it.
8. Securely store the flat tire, tools and jacking equipment in the vehicle.

NOTE:

Fully lower the spare tire below the vehicle before attempting to remove the winch from the spare tire.

⚠ CAUTION

- **Make sure safety cable is coiled above spare tire when reinstalling spare tire/wheel.**
- **When re-installing the spare tire under the vehicle after use, be sure to secure it with the tire stem facing down toward the ground. If the spare tire is improperly secured with the tire stem facing up towards the bottom of the vehicle, there is an increased risk of separating from the vehicle in the event of crash which may pose a hazard in traffic or risk of injury to others.**

Jacking up vehicle and removing the damaged tire

⚠ WARNING

- **Never get under the vehicle while it is supported only by the jack. If it is necessary to work under the vehicle, support it with safety stands.**

- **Use only the jack provided with your vehicle to lift the vehicle. Do not use the jack provided with your vehicle on other vehicles. The jack is designed for lifting only your vehicle during a tire change.**
- **Use the correct jack-up points. Never use any other part of the vehicle for jack support.**
- **Never jack up the vehicle more than necessary.**
- **Never use blocks on or under the jack.**
- **Do not start or run the engine while vehicle is on the jack. It may cause the vehicle to move. This is especially true for vehicles with limited slip differentials.**
- **Do not allow passengers to stay in the vehicle while it is on the jack.**
- **Never run the engine with a wheel(s) off the ground. It may cause the vehicle to move.**

Always refer to the illustration for the correct placement and jack-up points for your specific vehicle model and jack type.

Carefully read the caution label attached to the jack body and the following instructions.

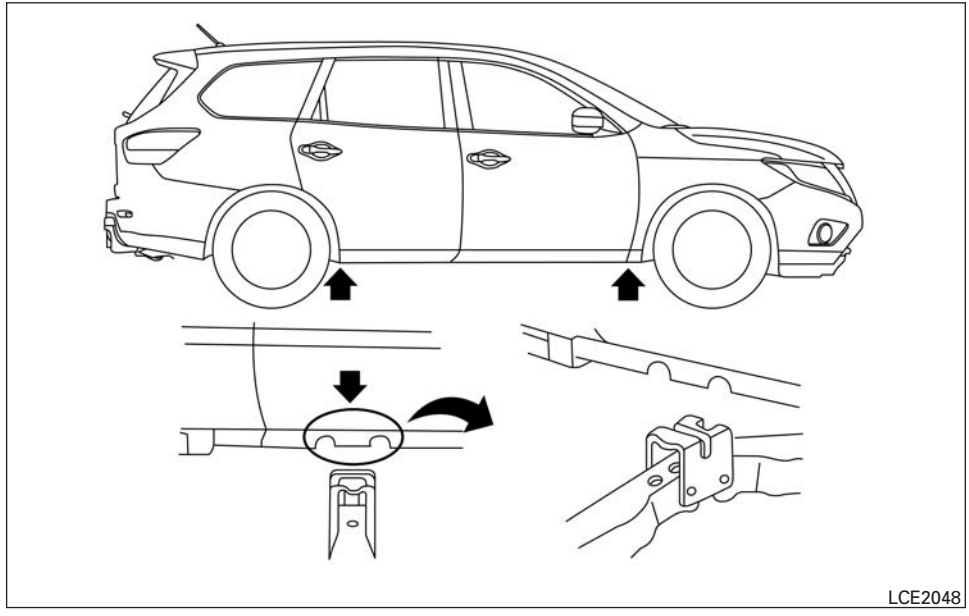

1. Loosen each wheel nut one or two turns by turning counterclockwise with the wheel nut wrench. **Do not remove the wheel nuts until the tire is off the ground.**
2. Place the jack directly under the jack-up point as illustrated so the top of the jack contacts the vehicle at the jack-up point. The jack-up points are indicated by stamped arrows on the side of the frame.

The jack should be used on firm and level ground.

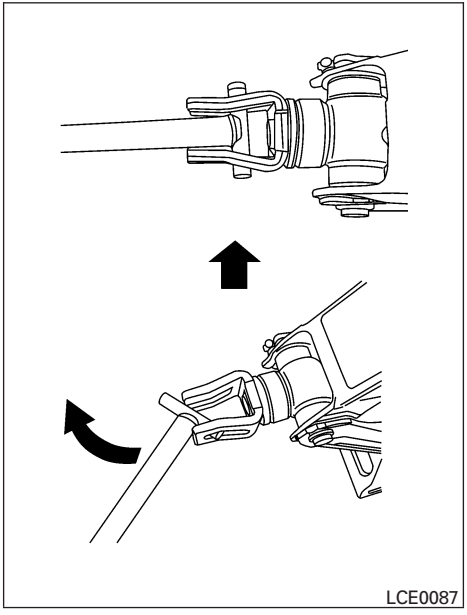

3. Install the assembled jack rod into the jack as shown.
4. To lift the vehicle, securely hold the jack lever and rod. Carefully raise the vehicle until the tire clears the ground.

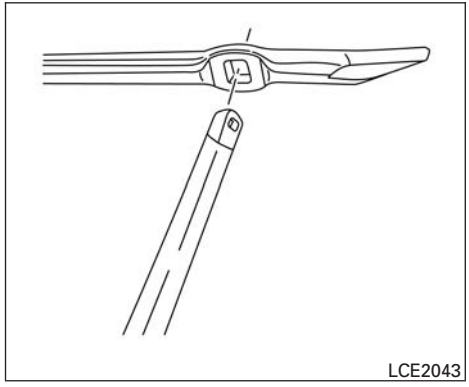

NOTE:

If the lug nut wrench/jack handle contacts the ground while raising the vehicle, disassemble the lug nut wrench from the jack extension rod, rotate it 90 degrees and reassemble.

5. Remove the wheel nuts and then remove the tire.

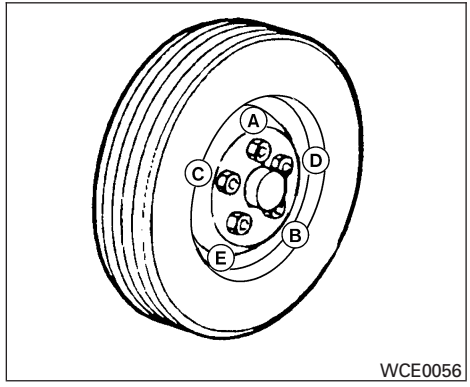

Installing the spare tire

The spare tire is designed for emergency use. For additional information, refer to "Wheels and tires" in the "Maintenance and do-it-yourself" section of this manual.

1. Clean any mud or dirt from the surface between the wheel and hub.
2. Carefully put the spare tire on and tighten the wheel nuts finger tight.
3. With the wheel nut wrench, tighten wheel nuts alternately and evenly as illustrated until they are tight (Ⓐ, Ⓑ, Ⓒ, Ⓓ, Ⓔ).

4. Lower the vehicle slowly until the tire touches the ground. Then, with the wheel nut wrench, tighten the wheel nuts securely in the sequence illustrated (Ⓐ, Ⓑ, Ⓒ, Ⓓ, Ⓔ). Lower the vehicle completely.

⚠ WARNING

- **Incorrect wheel nuts or improperly tightened wheel nuts can cause the wheel to become loose or come off. This could cause an accident.**
- **Do not use oil or grease on the wheel studs or nuts. This could cause the nuts to become loose.**
- **Retighten the wheel nuts when the vehicle has been driven for 600 miles (1,000 km) (also in cases of a flat tire, etc.).**

As soon as possible, tighten the wheel nuts to the specified torque with a torque wrench.

Wheel nut tightening torque:

83 ft-lb (113 N·m)

The wheel nuts must be kept tightened to specification at all times. It is recommended that wheel nuts be tightened to specifications at each lubrication interval.

Adjust tire pressure to the COLD pressure.

COLD pressure: After vehicle has been parked for 3 hours or more or driven less than 1 mile (1.6 km).

COLD tire pressures are shown on the tire and loading information label affixed to the driver side center pillar.

5. Securely store the flat tire, tools and jacking equipment in the vehicle.
6. Close the liftgate.

⚠ WARNING

- **Always make sure that the spare tire and jacking equipment are properly secured after use. Such items can become dangerous projectiles in an accident or sudden stop.**
- **The spare tire is designed for emergency use. For additional information, refer to "Wheels and tires" in the "Maintenance and do-it-yourself" section of this manual.**

HYBRID SYSTEM STOPS OPERATING WHILE DRIVING

⚠ WARNING

- **If the hybrid system stops operating while driving, the power assist for the brakes and steering will not work. Braking and steering will be harder.**
- **If the hybrid system stops operating while driving, do not open any door until the vehicle comes to a complete stop. Opening a door will lock the steering wheel. This may cause the driver to lose control of the vehicle and could result in serious vehicle damage or personal injury.**

The hybrid system may stop operating while driving if the high-voltage battery becomes discharged, the 12-volt battery becomes discharged or the fuel tank is empty. If the hybrid system stops operating while driving, perform the following:

1. Reduce your speed gradually. Pull to the side of the road to a safe area.
2. Turn on the hazard warning flashers.
3. Set the push-button ignition switch at ACC or OFF, and try to start the hybrid system.
4. If the hybrid system will not start, refer to the "If the vehicle does not start" section of this manual.

Before attempting to jump start the vehicle, make sure the fuel tank is not empty and the correct starting procedure is followed. For additional information, refer to “Starting the NISSAN PURE-DRIVE™ Hybrid System” in the “Starting and driving” section of your Owner’s Manual. Do not drive the vehicle on battery power only if the fuel tank is empty. The Li-ion battery will become discharged and the hybrid system will turn off.

CONFIRM BATTERY IS DISCHARGED

Confirm the battery is discharged by pushing the ignition switch to the ON position. Confirm the instrument cluster or head lights come on at the normal brightness levels or that other accessories such as the audio system come on. Push the ignition switch to turn the hybrid system on.

If any of the following conditions occur, the 12-volt battery might discharge:

- The instrument cluster and/or headlights are not normal brightness.
- Audio accessories cannot be turned on.
- The hybrid system does not become READY to drive mode.
- The ignition switch cannot be placed in the ON position.

Check the following if you notice any of the above conditions:

1. Check that the 12-volt battery terminals are tight and clean. For additional information, refer to “12-volt Battery” in the “Maintenance and do-it-yourself” section. If the 12-volt battery terminals are loose, contact your NISSAN dealer.
2. If the 12-volt battery terminals are tight and clean, try to jump start the vehicle. For additional information, refer to “Jump starting” in this section.

EMERGENCY START

When the hybrid system cannot be started, the following procedure can be used if the hybrid system and push-button ignition switch function normally:

1. Put the transmission in P (Park) position.
2. Push the ignition switch to the ACC position.
3. Depress the brake pedal.
4. Push and hold the ignition switch for about 15 seconds. Even if the hybrid system starts using this procedure, the system may be malfunctioning. Do not continue to use this emergency procedure to start the system. Have the vehicle checked by your NISSAN dealer.

If the hybrid system still does not start, contact you NISSAN dealer.

JUMP STARTING

Jump starting provides power to the 12–volt system to allow the electrical systems to operate. The electrical systems must be operating to allow the Li-ion battery to be charged. Jump starting does not charge the Li-ion battery.

To start the hybrid system with a booster battery, the instructions and precautions below must be followed.

⚠ WARNING

- **The engine may start at any time without warning when the ignition is on and the hybrid system is in the READY mode. When jump starting keep your hands, clothing, hair and tools away from fans, belts and any other parts that can move to avoid personal injury.**
- **If done incorrectly, jump starting can lead to a 12–volt battery explosion, resulting in severe injury or death. It could also damage your vehicle.**
- **Explosive hydrogen gas is always present in the vicinity of the battery. Keep all sparks and flames away from the battery.**
- **Do not allow battery fluid to come into contact with eyes, skin, clothing or painted surfaces. Battery fluid is a corrosive sulfuric acid solution which can cause severe burns. If the fluid should come into contact with anything, immediately flush the contacted area with water.**
- **Keep 12–volt battery out of the reach of children.**
- **The booster battery must be rated at 12 volts. Use of an improperly rated battery can damage your vehicle.**
- **Whenever working on or near a battery, always wear suitable eye protectors (for example, goggles or industrial safety spectacles) and remove rings, metal bands, or any other jewelry. Do not lean over the battery when jump starting.**
- **Do not attempt to jump start a frozen battery. It could explode and cause serious injury.**
- **Your vehicle has an automatic engine cooling fan. It could come on at any time. Keep hands and other objects away from it.**
- **Always follow the instructions below. Failure to do so could result in damage to the charging system and cause personal injury.**

⚠ CAUTION

Do not attempt to jump start a hybrid vehicle as a booster vehicle.

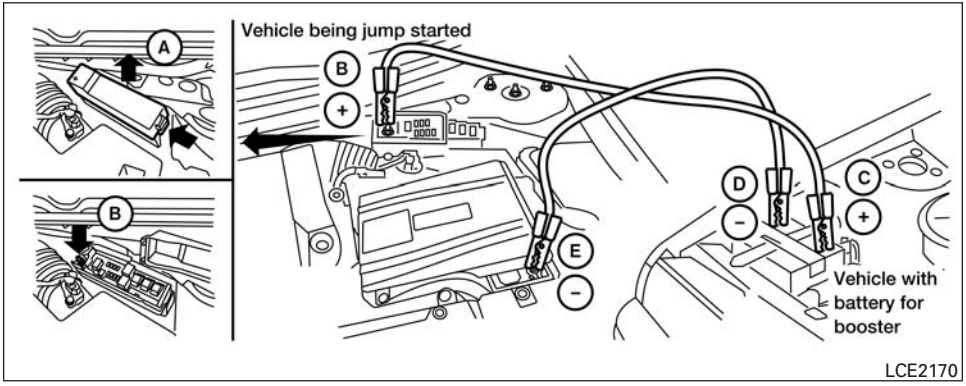

1. Locate the fusible link box behind the engine air cleaner.
2. Push the tab in and lift up Ⓐ to remove the lid and expose the remote positive battery terminal Ⓑ.
3. If the booster battery is in another vehicle position the two vehicles to bring their batteries near each other.

   Do not allow the two vehicles to touch.
4. Apply the parking brake. Move the shift lever to P (Park). Switch off all unnecessary electrical systems (lights, heater, air conditioner, etc.).
5. Ensure vent caps are level and tight.
6. Connect jumper cables in the sequence illustrated (Ⓑ, Ⓒ, Ⓓ, Ⓔ).

⚠ CAUTION

- **Always connect positive (+) to positive (+) and negative (−) to body ground (for example, strut mounting bolt, engine lift bracket, etc.) — not to the battery.**
- **Make sure the jumper cables do not touch moving parts in the engine compartment and that the cable clamps do not contact any other metal.**
- **Do not keep the starter motor engaged for more than 10 seconds. If the engine does not start right away, place the ignition switch in the OFF position and wait 10 seconds.**

7. Start the engine of the booster vehicle and let it run for a few minutes.
8. Hold down the brake pedal and press the START button. The vehicle instruments and gauges will light up, and the green "READY" light will come ON.

⚠ CAUTION

If the green READY light does not come on, press the START button to turn the hybrid system OFF. Carefully disconnect the negative cable then the positive cable. Have vehicle taken to dealership for repair.

9. After the green READY light in the meter display comes ON, carefully disconnect the negative cable and then the positive cable.

⚠ CAUTION

- **CVT models cannot be push-started or tow-started. Attempting to do so may cause transmission damage.**
- **Do not push start this vehicle. The 3-way catalyst may be damaged.**

IF YOUR VEHICLE OVERHEATS

⚠ WARNING

- **Do not continue to drive if your vehicle overheats. Doing so could cause engine damage or a vehicle fire.**
- **To avoid the danger of being scalded, never remove the radiator or coolant reservoir cap while the engine is still hot. When the radiator or coolant reservoir cap is removed, pressurized hot water will spurt out, possibly causing serious injury.**
- **Do not open the hood if steam is coming out.**

If your vehicle is overheating (indicated by an extremely high temperature gauge reading and the illumination of the engine oil pressure/engine coolant temperature high indicator light), or if you feel a lack of engine power, detect abnormal noise, etc. take the following steps.

1. Move the vehicle safely off the road, apply the parking brake and move the shift lever to P (Park).

   Do not turn the NISSAN PUREDRIVE™ Hybrid System off.

2. Turn off the air conditioner. Open all the windows, move the heater or air conditioner temperature control to maximum hot and fan control to high speed.
3. Get out of the vehicle. Look and listen for steam or coolant escaping from the radiator before opening the hood. If steam or coolant is escaping, turn off the engine. Do not open the hood further until no steam or coolant can be seen.
4. Open the engine hood.

⚠ WARNING

If steam or water is coming from the engine, stand clear to prevent getting burned.

5. Also check if the cooling fan is running. The radiator hoses and radiator should not leak water. If the coolant is leaking or the cooling fan does not run, stop the hybrid system.
6. Visually check drive belts for damage or looseness. Also check if the cooling fan is running. The radiator hoses and radiator should not leak water. If coolant is leaking, the water pump belt is missing or loose, or the cooling fan does not run, stop the engine.

⚠ WARNING

Be careful not to allow your hands, hair, jewelry or clothing to come into contact with, or get caught in, engine belts or the engine cooling fan. The engine cooling fan can start at any time.

7. After the engine cools down, check the coolant level in the engine coolant reservoir tank with the engine running. Add coolant to the engine coolant reservoir tank if necessary. Have your vehicle repaired at an NISSAN dealer.

When towing your vehicle, all jurisdictional and local regulations for towing must be followed. Incorrect towing equipment could damage your vehicle. Towing instructions are available from a NISSAN dealer. Local service operators are generally familiar with the applicable laws and procedures for towing. To assure proper towing and to prevent accidental damage to your vehicle, NISSAN recommends having a service operator tow your vehicle. It is advisable to have the service operator carefully read the following precautions:

⚠ WARNING

- **Never ride in a vehicle that is being towed.**
- **Never get under your vehicle after it has been lifted by a tow truck.**

⚠ CAUTION

- **When towing, make sure that the transmission, axles, steering system and powertrain are in working condition. If any of these conditions apply, dollies or a flatbed tow truck must be used.**
- **Always attach safety chains before towing.**

For additional information about towing your vehicle behind a recreational vehicle (RV), refer to “Flat towing” in the “Technical and Consumer Information” section of this manual.

TOWING RECOMMENDED BY NISSAN

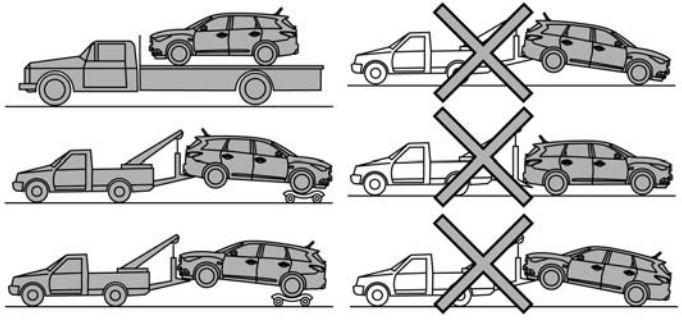

LCE2143

Four-wheel drive models

NISSAN recommends that towing dollies be used when towing your vehicle or place the vehicle on a flat bed truck as illustrated.

⚠ CAUTION

Never tow 4WD models with any of the wheels on the ground as this may cause serious and expensive damage to the powertrain.

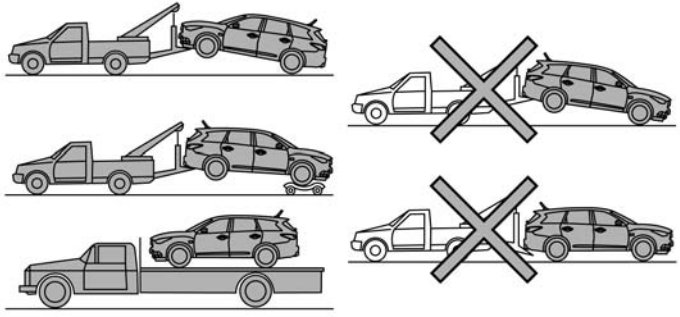

LCE2041

Front-wheel drive models

NISSAN recommends that your vehicle be towed with the driving wheels (front) off the ground or place the vehicle on a flat bed truck as illustrated.

⚠ WARNING

- **Never tow your vehicle with the front wheels on the ground or 4 wheels on the ground (forward or backward), as this may cause serious and expensive damage to the transmission. If it is necessary to tow the vehicle with the rear wheels raised always use towing dollies under the front wheels.**
- **When towing with the rear wheels on the ground or on towing dollies, place the ignition switch in the ACC or ON position, and secure the steering wheel in the straight-ahead position with a rope or similar device.**

VEHICLE RECOVERY (freeing a stuck vehicle)

Pulling a stuck vehicle

⚠ WARNING

To avoid vehicle damage, serious personal injury or death when recovering a stuck vehicle:

- **Contact a professional towing service to recover the vehicle if you have any questions regarding the recovery procedure.**
- **Attach recovery devices only to main structural members of the vehicle or the recovery hooks.**
- **Do not use the vehicle tie-downs to tow or free a stuck vehicle.**
- **Only use devices specifically designed for vehicle recovery and follow the manufacturer's instructions.**
- **Always pull the recovery device straight out from the front of the vehicle. Never pull at an angle.**
- **Route recovery devices so they do not touch any part of the vehicle except the attachment point.**

If your vehicle is stuck in sand, snow, mud, etc., use a tow strap or other device designed specifically for vehicle recovery. Always follow the manufacturer's instructions for the recovery device.

Do not use the tie-down hooks for towing or vehicle recovery.

Rocking a stuck vehicle

⚠ WARNING

- **Stand clear of a stuck vehicle.**
- **Do not spin your tires at high speed. This could cause them to explode and result in serious injury. Parts of your vehicle could also overheat and be damaged.**

If your vehicle is stuck in sand, snow, mud, etc., use the following procedure:

1. Turn off the Vehicle Dynamic Control (VDC) system.
2. Make sure the area in front and behind the vehicle is clear of obstructions.
3. Turn the steering wheel right and left to clear an area around the front tires.
4. Slowly rock the vehicle forward and backward.
   - Shift back and forth between R (Reverse) and D (Drive).
   - Apply the accelerator as little as possible to maintain the rocking motion.
   - Release the accelerator pedal before shifting between R and D.
   - Do not spin the tires above 35 mph (55 km/h).
5. If the vehicle cannot be freed after a few tries, contact a professional towing service to remove the vehicle.

MEMO

7 Appearance and care

Cleaning exterior 7-2
Washing 7-2
Waxing 7-2
Removing spots 7-3
Underbody 7-3
Glass 7-3
Aluminum alloy wheels 7-3
Chrome parts 7-3
Tire dressings 7-3
Cleaning interior 7-4
Lithium-ion (Li-ion) battery air vent 7-4
Air fresheners 7-5
Power Moonroof (if so equipped) 7-5
Floor mats 7-5
Seat belts 7-6
Cleaning the seat tracks 7-7
Corrosion protection 7-7
Most common factors contributing to vehicle corrosion 7-7
Environmental factors influence the rate of corrosion 7-7
Protect your vehicle from corrosion 7-7

In order to maintain the appearance of your vehicle, it is important to take proper care of it.

To protect the paint surfaces, please wash your vehicle as soon as you can:

- after a rainfall to prevent possible damage from acid rain
- after driving on coastal roads
- when contaminants such as soot, bird droppings, tree sap, metal particles or bugs get on the paint surface
- when dust or mud builds up on the surface

Whenever possible, store or park your vehicle inside a garage or in a covered area.

When it is necessary to park outside, park in a shady area or protect the vehicle with a body cover.

Be careful not to scratch the paint surface when putting on or removing the body cover.

WASHING

Wash dirt off with a wet sponge and plenty of water. Clean the vehicle thoroughly using a mild soap, a special vehicle soap or general purpose dishwashing liquid mixed with clean, lukewarm (never hot) water.

⚠ CAUTION

- **Do not use car washes that use acid in the detergent. Some car washes, especially brushless ones, use some acid for cleaning. The acid may react with some plastic vehicle components, causing them to crack. This could affect their appearance, and also could cause them not to function properly. Always check with your car wash to confirm that acid is not used.**
- **Do not wash the vehicle with strong household soap, strong chemical detergents, gasoline or solvents.**
- **Do not wash the vehicle in direct sunlight or while the vehicle body is hot, as the surface may become water-spotted.**
- **Avoid using tight-napped or rough cloths, such as washing mitts. Care must be taken when removing caked-on dirt or other foreign substances so the paint surface is not scratched or damaged.**

Rinse the vehicle thoroughly with plenty of clean water.

Inside edges, seams and folds on the doors, hatches and hood are particularly vulnerable to the effects of road salt. Therefore, these areas must be cleaned regularly. Take care that the drain holes in the lower edge of the door are open. Spray water under the body and in the wheel wells to loosen the dirt and wash away road salt.

A damp chamois can be used to dry the vehicle to avoid water spots.

WAXING

Regular waxing protects the paint surface and helps retain new vehicle appearance. Polishing is recommended to remove built-up wax residue and to avoid a weathered appearance before re-applying wax.

A NISSAN dealer can assist you in choosing the proper product.

- Wax your vehicle only after a thorough washing. Follow the instructions supplied with the wax.
- Do not use a wax containing any abrasives, cutting compounds or cleaners that may damage the vehicle finish.

Machine compounding or aggressive polishing on a base coat/clear coat paint finish may dull the finish or leave swirl marks.

REMOVING SPOTS

Remove tar and oil spots, industrial dust, insects, and tree sap as quickly as possible from the surface of the paint to avoid lasting damage or staining. Special cleaning products are available at a NISSAN dealer or any automotive accessory store.

UNDERBODY

In areas where road salt is used in winter, it is necessary to clean the underbody regularly in order to prevent dirt and salt from building up and causing the acceleration of corrosion on the underbody and suspension. Before the winter period and again in the spring, the underseal must be checked and, if necessary, re-treated.

GLASS

Use glass cleaner to remove smoke and dust film from the glass surfaces. It is normal for glass to become coated with a film after the vehicle is parked in the hot sun. Glass cleaner and a soft cloth will easily remove this film.

⚠ CAUTION

When cleaning the inside of the windows, do not use sharp-edged tools, abrasive cleaners or chlorine-based disinfectant cleaners. They could damage the electrical conductors, radio antenna elements or rear window defroster elements.

ALUMINUM ALLOY WHEELS

Wash the wheels regularly with a sponge dampened in a mild soap solution, especially during winter months in areas where road salt is used. If not removed, road salt can discolor the wheels.

⚠ CAUTION

Follow the directions below to avoid staining or discoloring the wheels:

- **Do not use a cleaner that uses strong acid or alkali contents to clean the wheels.**
- **Do not apply wheel cleaners to the wheels when they are hot. The wheel temperature should be the same as ambient temperature.**
- **Rinse the wheel to completely remove the cleaner within 15 minutes after the cleaner is applied.**

CHROME PARTS

Clean all chrome parts regularly with a non-abrasive chrome polish to maintain the finish.

TIRE DRESSINGS

NISSAN does not recommend the use of tire dressings. Tire manufacturers apply a coating to the tires to help reduce discoloration of the rubber. If a tire dressing is applied to the tires, it may react with the coating and form a compound. This compound may come off the tire while driving and stain the vehicle paint.

If you choose to use a tire dressing, take the following precautions:

- Use a water-based tire dressing. The coating on the tire dissolves more easily than with an oil-based tire dressing.
- Apply a light coat of tire dressing to help prevent it from entering the tire tread/grooves (where it would be difficult to remove).
- Wipe off excess tire dressing using a dry towel. Make sure the tire dressing is completely removed from the tire tread/grooves.
- Allow the tire dressing to dry as recommended by the tire dressing manufacturer.

CLEANING INTERIOR

Occasionally remove loose dust from the interior trim, plastic parts and seats using a vacuum cleaner or soft bristled brush. Wipe the vinyl and leather surfaces with a clean, soft cloth dampened in mild soap solution, then wipe clean with a dry, soft cloth.

Regular care and cleaning is required in order to maintain the appearance of the leather.

Before using any fabric protector, read the manufacturer's recommendations. Some fabric protectors contain chemicals that may stain or bleach the seat material.

Use a cloth dampened only with water to clean the meter and gauge lens.

⚠ WARNING

Do not use water or acidic cleaners (hot steam cleaners) on the seat. This can damage the seat or occupant classification sensor. This can also affect the operation of the air bag system and result in serious personal injury.

⚠ CAUTION

- **Never use benzine, thinner or any similar material.**
- **Small dirt particles can be abrasive and damaging to leather surfaces and should be removed promptly. Do not use saddle soap, car waxes, polishes, oils, cleaning fluids, solvents, detergents or ammonia-based cleaners as they may damage the leather's natural finish.**
- **Never use fabric protectors unless recommended by the manufacturer.**
- **Do not use glass or plastic cleaner on meter or gauge lens covers. It may damage the lens cover.**

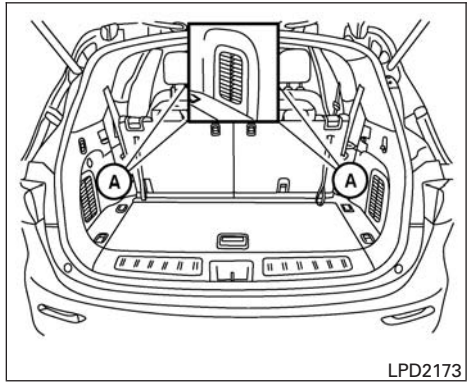

LPD2173

LITHIUM-ION (Li-ion) BATTERY AIR VENT

⚠ CAUTION

- **Do not place objects over or into the air vent. The Li-ion battery may overheat and be damaged.**
- **Do not allow any liquid to get on or in the air vent. It may cause a short circuit and damage the Li-ion battery.**
- **Clean the air vent regularly to prevent the Li-ion battery from overheating.**

Regularly clean the air vent Ⓐ with a dry cloth to prevent the vent from being blocked.

AIR FRESHENERS

Most air fresheners use a solvent that could affect the vehicle interior. If you use an air freshener, take the following precautions:

- Hanging-type air fresheners can cause permanent discoloration when they contact vehicle interior surfaces. Place the air freshener in a location that allows it to hang free and not contact an interior surface.
- Liquid-type air fresheners typically clip on the vents. These products can cause immediate damage and discoloration when spilled on interior surfaces.

Carefully read and follow the manufacturer's instructions before using the air fresheners.

POWER MOONROOF (if so equipped)

The sunshade is made from a suede material.

⚠ CAUTION

To help prevent damaging the moonroof while cleaning:

- **Do not rub the material with a cloth. Doing so can damage the surface of the material or cause a stain to spread.**
- **Never use benzine, thinner or any similar chemical to clean the suede. This may discolor the moonroof and damage the surface.**
- **Clean water based stains by patting the surface with a clean soft cloth dampened in warm water. Press a clean dry cloth onto the surface to remove as much dampness as possible and then let air dry.**
- **Clean oil based stains by patting the surface with a clean soft cloth dampened in warm water. Press a clean dry cloth onto the surface to remove as much dampness as possible and then let air dry.**

FLOOR MATS

⚠ WARNING

To avoid potential pedal interference that may result in a collision or injury:

- **NEVER place a floor mat on top of another floor mat in the driver front position.**
- **Use only genuine NISSAN floor mats specifically designed for use in your vehicle model. For additional information, refer to your NISSAN dealer.**
- **Properly position the mats in the floorwell using the floor mat positioning aid. For additional information, refer to "Floor mat positioning aid" in this section.**

The use of genuine NISSAN floor mats can extend the life of your vehicle carpet and make it easier to clean the interior. Mats should be maintained with regular cleaning and replaced if they become excessively worn.

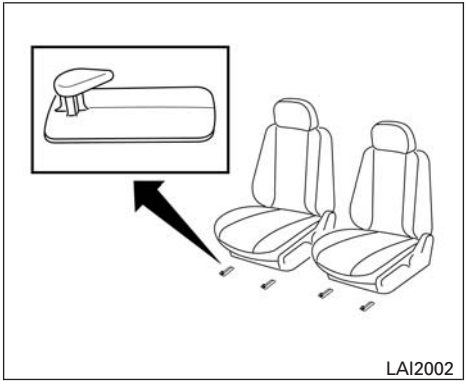

Bracket

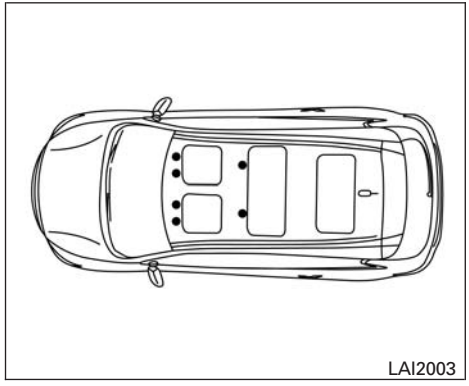

Bracket positions

Floor mat positioning aid

This vehicle includes the following floor mat positioning aids to help keep your floor mats in place:

- two driver's side front floor mat brackets
- two passenger's side front floor mat brackets
- one driver's side 2nd row floor mat bracket
- one passenger's side 2nd row floor mat bracket

Genuine NISSAN floor mats have been specially designed for your vehicle model. The floor mats have grommet holes incorporated in them. Position each mat by placing the floor mat bracket hook through the floor mat grommet holes while centering the mat in the floorwell.

Periodically check to make certain the mats are properly positioned.

SEAT BELTS

The seat belts can be cleaned by wiping them with a sponge dampened in a mild soap solution. Allow the belts to dry completely in the shade before using them. For additional information, refer to "Seat belt maintenance" in the "Safety – Seats, seat belts and supplemental restraint system" section of this manual.

⚠ WARNING

Do not allow wet seat belts to roll up in the retractor. NEVER use bleach, dye or chemical solvents to clean the seat belts, since these materials may severely weaken the seat belt webbing.

CLEANING THE SEAT TRACKS

⚠ CAUTION

Periodically clean the seat tracks to prevent reduction of ability to move the seats.

Clean periodically with a high-powered vacuum cleaner. Dirt and debris may reduce the ability to adjust the seat. A wet cleansing agent may be used if necessary.

MOST COMMON FACTORS CONTRIBUTING TO VEHICLE CORROSION

Most vehicle corrosion is caused by:

- the accumulation of moisture-retaining dirt and debris in body panel sections, cavities, and other areas
- damage to paint and other protective coatings caused by gravel and stone chips or minor traffic collisions

ENVIRONMENTAL FACTORS INFLUENCE THE RATE OF CORROSION

Moisture

Accumulation of sand, dirt and water on the vehicle body underside can accelerate corrosion. Wet floor coverings will not dry completely inside the vehicle and should be removed for drying to avoid floor panel corrosion.

Relative humidity

Corrosion will be accelerated in areas of high relative humidity, especially those areas where the temperatures stay above freezing and where atmospheric pollution exists and road salt is used.

Temperature

High temperatures accelerate the rate of corrosion to those parts which are not well ventilated.

Air pollution

Industrial pollution, the presence of salt in the air in coastal areas, or heavy road salt use accelerates the corrosion process. Road salt also accelerates the disintegration of paint surfaces.

PROTECT YOUR VEHICLE FROM CORROSION

- Wash and wax your vehicle often to keep the vehicle clean.
- Always check for minor damage to the paint and repair it as soon as possible.
- Keep drain holes at the bottom of the doors open to avoid water accumulation.
- Check the underbody for accumulation of sand, dirt or salt. If present, wash with water as soon as possible.

⚠ CAUTION

- **NEVER remove dirt, sand or other debris from the passenger compartment by washing it out with a hose. Remove dirt with a vacuum cleaner or broom.**
- **Never allow water or other liquids to come in contact with electronic components inside the vehicle as this may damage them.**

Chemicals used for road surface de-icing are extremely corrosive. They accelerate corrosion and deterioration of underbody components such as the exhaust system, fuel and brake lines, brake cables, floor pan and fenders.

In winter, the underbody must be cleaned periodically.

For additional protection against rust and corrosion, which may be required in some areas, consult a NISSAN dealer.

8 Maintenance and do-it-yourself

Maintenance requirements 8-2
General maintenance 8-2
Explanation of general maintenance items 8-2
Maintenance precautions 8-5
Engine compartment check locations 8-6
Engine cooling system 8-7
Checking engine coolant level 8-8
Changing engine coolant 8-8
Inverter cooling system 8-9
Checking inverter coolant level 8-10
Changing inverter coolant 8-10
Engine oil 8-10
Checking engine oil level 8-10
Changing engine oil 8-11
Changing engine oil filter 8-13
Continuously Variable Transmission (CVT) fluid 8-13
Power steering fluid 8-14
Brake fluid 8-14
Windshield-washer fluid 8-15
Windshield-washer fluid reservoir 8-15
12-Volt Battery 8-16
Jump starting 8-17
Drive belt 8-17
Spark plugs 8-18
Replacing spark plugs 8-18
Air cleaner 8-19
In-cabin microfilter 8-19
Windshield wiper blades 8-20
Cleaning 8-20
Replacing 8-20
Brakes 8-21
Fuses 8-22
Engine compartment 8-22
Passenger compartment 8-23
Battery replacement 8-24
NISSAN Intelligent Key® 8-25
Lights 8-26
Headlights 8-26
Fog lights 8-26
Exterior and interior lights 8-27
Wheels and tires 8-30
Tire pressure 8-30
Tire labeling 8-33
Types of tires 8-36
Tire chains 8-37
Changing wheels and tires 8-37

MAINTENANCE REQUIREMENTS

Your NISSAN is designed to have minimum maintenance requirements with long service intervals to save you both time and money; however, some day-to-day and regular maintenance is essential to maintain your NISSAN's good mechanical condition as well as its emissions and engine performance.

It is the owner's responsibility to make sure that the scheduled maintenance, as well as general maintenance, is performed.

As the vehicle owner, you are the only one who can ensure that your vehicle receives proper maintenance. You are a vital link in the maintenance chain.

Scheduled maintenance

For your convenience, both required and optional scheduled maintenance items are described and listed in your "NISSAN Service and Maintenance Guide". You must refer to that guide to ensure that necessary maintenance is performed on your NISSAN at regular intervals.

General maintenance

General maintenance includes those items which should be checked during normal day-to-day operation. They are essential for proper vehicle operation. It is your responsibility to perform these maintenance procedures regularly as prescribed.

Performing general maintenance checks requires minimal mechanical skill and only a few general automotive tools.

These checks or inspections can be done by you, a qualified technician or, if you prefer, a NISSAN dealer.

Where to go for service

If maintenance service is required or your vehicle appears to malfunction, have the systems checked and corrected by a NISSAN dealer.

NISSAN technicians are well-trained specialists who are kept up-to-date with the latest service information through technical bulletins, service tips and in-dealership training programs. They are completely qualified to work on NISSAN vehicles **before** they work on your vehicle rather than after they have worked on it.

You can be confident that a NISSAN dealer's service department performs the best job to meet the maintenance requirements on your vehicle — in a reliable and economical way.

GENERAL MAINTENANCE

During the normal day-to-day operation of the vehicle, general maintenance should be performed regularly as prescribed in this section. If you detect any unusual sounds, vibrations or smells, be sure to check for the cause or have a NISSAN dealer do it promptly. In addition, you should notify a NISSAN dealer if you think that repairs are required.

When performing any checks or maintenance work, closely observe the "Maintenance precautions" in this section.

EXPLANATION OF GENERAL MAINTENANCE ITEMS

Additional information on the following items with " * " is found in this section.

Outside the vehicle

The maintenance items listed here should be performed from time to time, unless otherwise specified.

Doors and engine hood Check that the doors and engine hood operate properly. Also ensure that all latches lock securely. Lubricate hinges, latches, latch pins, rollers and links as necessary. Make sure that the secondary latch keeps the hood from opening when the primary latch is released.

When driving in areas using road salt or other corrosive materials, check lubrication frequently.

Lights* Clean the headlights on a regular basis. Make sure that the headlights, stop lights, tail lights, turn signal lights, and other lights are all operating properly and installed securely. Also check headlight aim.

Road wheel nuts (lug nuts)* When checking the tires, make sure no wheel nuts are missing, and check for any loose wheel nuts. Tighten if necessary.

Tire rotation* Tires should be rotated every 5,000 miles (8,000 km).

Tires* Check the pressure with a gauge often and always prior to long distance trips. If necessary, adjust the pressure in all tires, including the spare, to the pressure specified. Check carefully for damage, cuts or excessive wear.

Tire Pressure Monitoring System (TPMS) transmitter components Replace the TPMS transmitter grommet seal, valve core and cap when the tires are replaced due to wear or age.

Wheel alignment and balance If the vehicle should pull to either side while driving on a straight and level road, or if you detect uneven or abnormal tire wear, there may be a need for wheel alignment. If the steering wheel or seat vibrates at normal highway speeds, wheel balancing may be needed.

- For additional information regarding tires, refer to “Important Tire Safety Information” (US) or “Tire Safety Information” (Canada) in the Warranty Information Booklet.

Windshield Clean the windshield on a regular basis. Check the windshield at least every six months for cracks or other damage. Have a damaged windshield repaired by a qualified repair facility.

Windshield wiper blades* Check for cracks or wear if they do not wipe properly.

Inside the vehicle

The maintenance items listed here should be checked on a regular basis, such as when performing periodic maintenance, cleaning the vehicle, etc.

Additional information on the following items with an “*” is found later in this section.

Accelerator pedal Check the pedal for smooth operation and make sure the pedal does not bind or require uneven effort. Keep the floor mat away from the pedal.

Brake pedal Check the pedal for smooth operation. If the brake pedal suddenly goes down further than normal, the pedal feels spongy or the vehicle seems to take longer to stop, see a NISSAN dealer immediately. Keep the floor mat away from the pedal.

Brakes Check that the brakes do not pull the vehicle to one side when applied.

Continuously Variable Transmission (CVT) P (Park) position mechanism On a fairly steep hill check that your vehicle is held securely with the shift lever in the P (Park) position without applying any brakes.

Parking brake Check the parking brake operation regularly. The vehicle should be securely held on a fairly steep hill with only the parking brake applied. If the parking brake needs adjustment, see a NISSAN dealer.

Seats Check seat position controls such as seat adjusters, seatback recliner, etc. to ensure they operate smoothly and all latches lock securely in every position. Check that the head restraints/headrests move up and down smoothly and the locks (if so equipped) hold securely in all latched positions.

Seat belts Check that all parts of the seat belt system (for example, buckles, anchors, adjusters and retractors) operate properly and smoothly,

and are installed securely. Check the belt webbing for cuts, fraying, wear or damage.

Steering wheel Check for changes in the steering system, such as excessive freeplay, hard steering or strange noises.

Warning lights and chimes Make sure all warning lights and chimes are operating properly.

Windshield wiper and washer* Check that the wipers and washer operate properly and that the wipers do not streak.

Windshield defroster Check that the air comes out of the defroster outlets properly and in sufficient quantity when operating the heater or air conditioner.

Under the hood and vehicle

The maintenance items listed here should be checked periodically (for example, each time you check the engine oil or refuel).

12–volt Battery* Except for maintenance-free battery, check the fluid level in each cell. It should be between the MAX and MIN lines. Vehicles operated in high temperatures or under severe conditions require frequent checks of the battery fluid level.

NOTE:

Care should be taken to avoid situations that can lead to potential battery discharge and potential no-start conditions such as:
1. Installation or extended use of electronic accessories that consume battery power when the engine is not running (Phone chargers, GPS, DVD players, etc.).
2. Vehicle is not driven regularly and/or only driven short distances. In these cases, the battery may need to be charged to maintain battery health.

Brake fluid level* Make sure that the brake fluid level is between the MIN and MAX lines on the reservoir.

Engine coolant level* Check the coolant level when the engine is cold. Make sure that the coolant level is

between the ″MAX″ and ″MIN″ lines on the reservoir.

Inverter coolant level* Check the coolant level when the inverter is cold. Make sure the coolant level is between the “MAX” and “MIN” lines on the reservoir.

Engine drive belts* Make sure the drive belts are not frayed, worn, cracked or oily.

Engine oil level* Check the level after parking the vehicle on a level surface with the engine off. Wait more than 10 minutes for the oil to drain back into the oil pan.

Exhaust system Make sure there are no loose supports, cracks or holes. If the sound of the exhaust seems unusual or there is a smell of exhaust fumes, immediately have the exhaust system inspected by a NISSAN dealer. For additional information, refer to the carbon monoxide warning in the “Starting and driving” section of this manual.

Fluid leaks Check under the vehicle for fuel, oil, water or other fluid leaks after the vehicle has been parked for a while. Water dripping from the air conditioner after use is normal. If you should notice any leaks or if gasoline fumes are evident, check for the cause and have it corrected immediately.

Power steering fluid level* and lines Check the level when the fluid is cold, with the engine off. Check the lines for proper attachment, leaks, cracks, etc.

Radiator and hoses Check the front of the radiator and clean off any dirt, insects, leaves, etc., that may have accumulated. Make sure the hoses have no cracks, deformation, rot or loose connections.

Underbody The underbody is frequently exposed to corrosive substances such as those used on icy roads or to control dust. It is very important to remove these substances from the underbody, otherwise rust may form on the floor pan, frame, fuel lines and exhaust system. At the end of winter, the underbody should be thoroughly flushed with plain water, in those areas where mud and dirt may have accumulated. For additional information, refer to "Appearance and care" section of this manual.

Windshield-washer fluid* Check that there is adequate fluid in the reservoir.

When performing any inspection or maintenance work on your vehicle, always take care to prevent serious accidental injury to yourself or damage to the vehicle. The following are general precautions which should be closely observed.

⚠ WARNING

- **Park the vehicle on a level surface, apply the parking brake securely and block the wheels to prevent the vehicle from moving. Move the shift lever to P (Park).**
- **Be sure the ignition switch is in the OFF or LOCK position when performing any parts replacement or repairs.**
- **If you must work with the engine running, keep your hands, clothing, hair and tools away from moving fans, belts and any other moving parts.**
- **It is advisable to secure or remove any loose clothing and remove any jewelry, such as rings, watches, etc. before working on your vehicle.**
- **Always wear eye protection whenever you work on your vehicle.**
- **Your vehicle is equipped with an automatic engine cooling fan. It may come on at any time without warning, even if the ignition switch is in the OFF position and the engine is not running. To avoid injury, always disconnect the negative battery cable before working near the fan.**
- **If you must run the engine in an enclosed space such as a garage, be sure there is proper ventilation for exhaust gases to escape.**
- **Never get under the vehicle while it is supported only by a jack. If it is necessary to work under the vehicle, support it with safety stands.**
- **Keep smoking materials, flame and sparks away from the fuel tank and battery.**
- **The fuel filter or fuel lines should be serviced by a NISSAN dealer because the fuel lines are under high pressure even when the engine is off.**

ENGINE COMPARTMENT CHECK LOCATIONS

⚠ CAUTION

- **Do not work under the hood while the engine is hot. Turn the engine off and wait until it cools down.**
- **Avoid contact with used engine oil and coolant. Improperly disposed engine oil, engine coolant and/or other vehicle fluids can damage the environment. Always conform to local regulations for disposal of vehicle fluid.**
- **Never leave the engine or continuously variable transmission related component harnesses disconnected while the ignition switch is in the ON position.**
- **Never connect or disconnect the battery or any transistorized component while the ignition switch is in the ON position.**

This "Maintenance and do-it-yourself" section gives instructions regarding only those items which are relatively easy for an owner to perform.

You should be aware that incomplete or improper servicing may result in operating difficulties or excessive emissions, and could affect warranty coverage. **If in doubt about any servicing, have it done by a NISSAN dealer.**

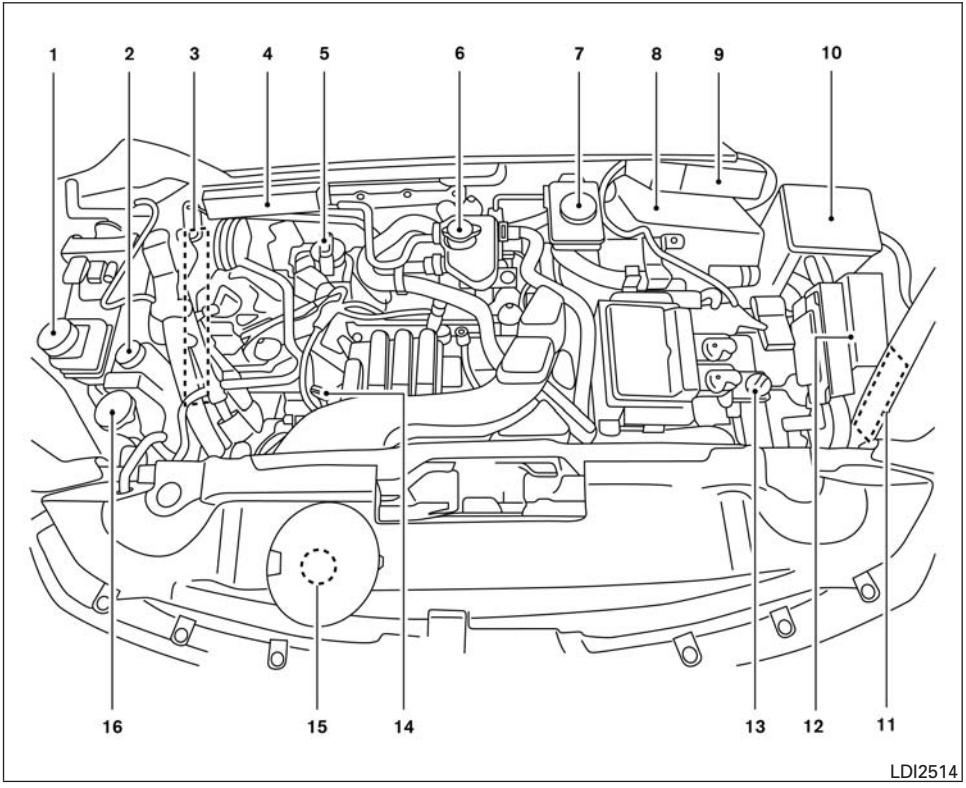

1. Power steering fluid reservoir
2. Engine coolant reservoir
3. Drive belt location
4. Fuse box
5. Engine oil filler cap
6. Inverter coolant reservoir
7. Brake fluid reservoir
8. Air cleaner
9. Fusible link box and remote positive
10. Fuse box
11 Fuse box/fusible links
12. Fuse box/fusible links
13. 12-volt battery
14. Engine oil dipstick
15. Radiator cap
16. Windshield-washer fluid reservoir

NOTE:

Hybrid system engine compartment cover(s) removed for clarity.

The engine cooling system is filled at the factory with a pre-diluted mixture of 50% Genuine NISSAN Long Life Antifreeze/Coolant (blue) and 50% water to provide year-round anti-freeze and coolant protection. The antifreeze solution contains rust and corrosion inhibitors. Additional engine cooling system additives are not necessary.

⚠ WARNING

- **Never remove the radiator or coolant reservoir cap when the engine is hot. Wait until the engine and radiator cool down. Serious burns could be caused by high pressure fluid escaping from the radiator. Refer to precautions in "If your vehicle overheats" found in the "In case of emergency" section of this manual.**
- **The radiator is equipped with a pressure type radiator cap. To prevent engine damage, use only a Genuine NISSAN radiator cap.**

⚠ CAUTION

- **Never use any cooling system additives such as radiator sealer. Additives may clog the cooling system and cause damage to the engine, transmission and/or cooling system.**
- **When adding or replacing coolant, be sure to use only Genuine NISSAN Long Life Antifreeze/Coolant (blue) or equivalent. Genuine NISSAN Long Life Antifreeze/Coolant (blue) is pre-diluted to provide antifreeze protection to -34° F (-37° C). If additional freeze protection is needed due to weather where you operate your vehicle, add Genuine NISSAN Long Life Antifreeze/Coolant (blue) concentrate following the directions on the container. If an equivalent coolant other than Genuine NISSAN Long Life Antifreeze/Coolant (blue) is used, follow the coolant manufacturer's instructions to maintain minimum antifreeze protection to -34° F (-37° C). The use of other types of coolant solutions other than Genuine NISSAN Long Life Antifreeze/Coolant (blue) or equivalent may damage the engine cooling system.**

- **The life expectancy of the factory-fill coolant is 105,000 miles (168,000 km) or 7 years. Mixing any other type of coolant other than Genuine NISSAN Long Life Antifreeze/Coolant (blue), including Genuine NISSAN Long Life Antifreeze/Coolant (green), or the use of non-distilled water will reduce the life expectancy of the factory-fill coolant. Refer to the NISSAN Service and Maintenance Guide for more details.**

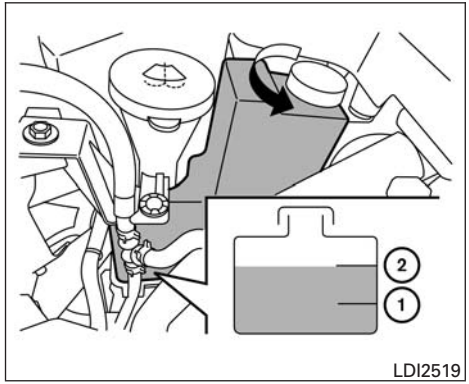

CHECKING ENGINE COOLANT LEVEL

Check the coolant level **in the reservoir when the engine is cold.** If the coolant level is below the MIN level ①, add coolant to the MAX level ②. If the reservoir is empty, check the coolant level in the radiator **when the engine is cold.** If there is insufficient coolant in the radiator, fill the radiator with coolant up to the filler opening and also add it to the reservoir up to the MAX level ②.

This vehicle contains Genuine NISSAN Long Life Antifreeze/Coolant (blue). The life expectancy of the factory-fill coolant is 105,000 miles (168,000 km) or 7 years. Mixing any other type of coolant or the use of non-distilled water will reduce the life expectancy of the factory-fill coolant. Refer to the NISSAN Service and Maintenance Guide for more details.

For additional information on the location of the engine coolant reservoir, refer to “Engine compartment check locations” in this section.

The engine coolant reservoir is a pressurized tank. When installing the cap, tighten it until a clicking sound is heard.

If the cooling system frequently requires coolant, have it checked by a NISSAN dealer.

CHANGING ENGINE COOLANT

A NISSAN dealer can change the engine coolant. The service procedure can be found in the NISSAN Service Manual.

Improper servicing can result in reduced heater performance and engine overheating.

⚠ WARNING

- **To avoid the danger of being scalded, never change the coolant when the engine is hot.**
- **Never remove the radiator or engine coolant reservoir cap when the engine is hot. Serious burns could be caused by high pressure fluid escaping from the radiator.**
- **Avoid direct skin contact with used coolant. If skin contact is made, wash thoroughly with soap or hand cleaner as soon as possible.**
- **Keep coolant out of the reach of children and pets.**

Engine coolant must be disposed of properly. Check your local regulations.

The inverter cooling system is filled at the factory with a pre-diluted mixture of 50% Genuine NISSAN Long Life Antifreeze/Coolant (blue) and 50% water to provide year-round anti-freeze and coolant protection. The anti-freeze solution contains rust and corrosion inhibitors. Additional inverter cooling system additives are not necessary.

⚠ WARNING

- **Never remove the coolant reservoir cap when the engine and inverter are hot. Wait until the engine and inverter cool down. Serious burns could be caused by high pressure fluid escaping from the reservoir.**
- **The inverter reservoir is equipped with a pressure type cap. To prevent engine and inverter damage, use only a genuine NISSAN inverter reservoir cap.**

⚠ CAUTION

- **Never use any additives in the coolant such as radiator sealer in the cooling system. This may cause damage to electrical equipment such as the motor and inverter, as well as the engine and transmission.**
- **When adding or replacing coolant, be sure to use only a Genuine NISSAN Long Life Antifreeze/Coolant (blue) or equivalent. Genuine NISSAN Long Life Antifreeze/Coolant (blue) is pre-diluted to provide antifreeze protection to -34° F (-37° C). If additional antifreeze protection is needed due to weather where you operate your vehicle, add Genuine NISSAN Long Life Antifreeze/Coolant (blue). The use of other types of coolant solutions other than Genuine NISSAN Long Life Antifreeze/Coolant (blue) or equivalent, may damage the inverter cooling system.**
- **The life expectancy of the factory-fill coolant is 125,000 miles (200,000 km) or 15 years. Mixing any other type of coolant other than Genuine NISSAN Long Life Antifreeze/ Coolant (blue), including Genuine NISSAN Long Life Antifreeze/ Coolant (green), or the use on non-distilled water will reduce the life expectancy of factory-fill coolant. Refer to the NISSAN Service and Maintenance Guide for more details.**

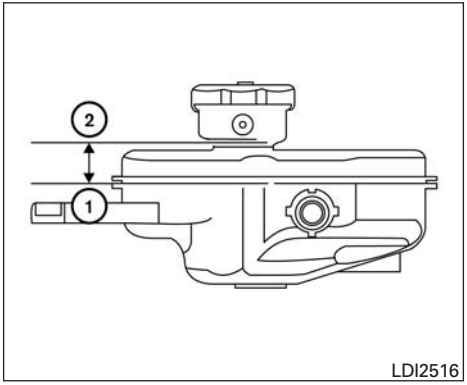

LDI2516

CHECKING INVERTER COOLANT LEVEL

Check the coolant level **in the reservoir when the engine and inverter are cold.** The coolant level should be between the MIN level ①, add coolant to the MAX level ②.

If the inverter cooling system frequently requires coolant, have it checked by a NISSAN dealer.

CHANGING INVERTER COOLANT

Major cooling system repairs should be done by a NISSAN dealer. The service procedure can be found in the NISSAN Service Manual.

Improper servicing can result in inverter overheating.

⚠ WARNING

- **To avoid the danger of being scalded, never change the coolant when the inverter is hot.**
- **Never remove the cap when the inverter is hot. Serious burns could be caused by high pressure fluid escaping from the inverter coolant reservoir.**
- **Avoid direct skin contact with used coolant. If skin contact is made, wash thoroughly with soap or hand cleaner as soon as possible.**
- **Keep coolant out of the reach of children and pets.**

Engine coolant must be disposed of properly. Check your local regulations.

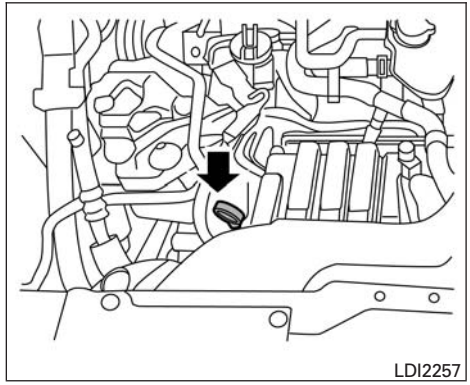
LDI2257

CHECKING ENGINE OIL LEVEL

1. Park the vehicle on a level surface and apply the parking brake.
2. Start the engine and let it idle until it reaches operating temperature.
3. Turn off the engine. **Wait more than 10 minutes for the oil to drain back into the oil pan.**
4. Remove the dipstick and wipe it clean. Reinsert it all the way.

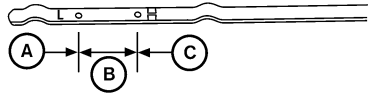

LDI0371

5. Remove the dipstick again and check the oil level. It should be between the H (High) and L (Low) marks Ⓑ. This is the normal operating oil level range. If the oil level is below the L (Low) mark Ⓐ, remove the oil filler cap and pour recommended oil through the opening. **Do not overfill Ⓒ.**
6. Recheck oil level with the dipstick.

It is normal to add some oil between oil maintenance intervals or during the break-in period, depending on the severity of operating conditions.

⚠ CAUTION

Oil level should be checked regularly. Operating the engine with an insufficient amount of oil can damage the engine, and such damage is not covered by warranty.

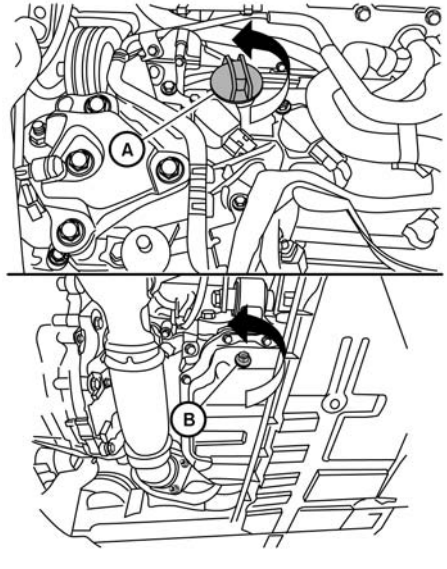

LDI2479

CHANGING ENGINE OIL

⚠ WARNING

- **Prolonged and repeated contact with used engine oil may cause skin cancer.**

- **Try to avoid direct skin contact with used oil. If skin contact is made, wash thoroughly with soap or hand cleaner as soon as possible.**
- **Keep used engine oil out of reach of children.**

⚠ CAUTION

Be careful not to burn yourself. The engine oil may be hot.

1. Park the vehicle on a level surface and apply the parking brake.
2. Start the engine and let it idle until it reaches operating temperature, then turn it off.
3. Refer to, "Engine compartment check locations" in this section to locate the oil filler cap Ⓐ.
4. Remove the oil filler cap Ⓐ by turning it counterclockwise.
5. Place a large drain pan under the drain plug Ⓑ.
6. Remove the drain plug Ⓑ with a wrench by turning it counterclockwise and completely drain the oil.

   If the oil filter is to be changed, remove and replace it at this time. Refer to "Changing engine oil filter" in this section.

   - **Waste oil must be disposed of properly.**
   - **Check your local regulations.**
7. Clean and reinstall the drain plug and a new washer. Securely tighten the drain plug with a wrench. Do not use excessive force.

   Drain plug tightening torque:
   25 ft-lb (34 N·m)
8. Refill engine with recommended oil through the oil filler opening, then install the oil filler cap securely.

   Refer to "Recommended fluids/lubricants and capacities" in the "Technical and consumer information" section of this manual for drain and refill capacity.

   The drain and refill capacity depends on the oil temperature and drain time. Use these specifications for reference only. Always use the dipstick to determine when the proper amount of oil is in the engine.
9. Start the engine. Check for leakage around the drain plug and oil filter. Correct as required.
10. Turn the engine off and wait more than 10 minutes. Check the oil level with the dipstick. Add engine oil if necessary.

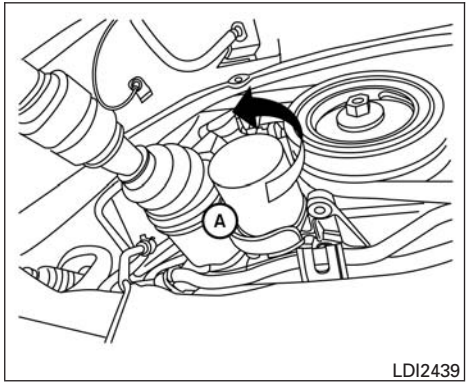

LDI2439

CHANGING ENGINE OIL FILTER

⚠ CAUTION

Be careful not to burn yourself. The engine oil may be hot.

⚠ CAUTION

- **Be sure to remove any old gasket material remaining on the sealing surface of the engine. Failure to do so could lead to an oil leak and engine damage.**
- **The dipstick must be inserted in place to prevent oil spillage from the dipstick hole when filling the engine with oil.**

1. Park the vehicle on a level surface and apply the parking brake.
2. Turn the engine off.
3. Place a large drain pan under the oil filter Ⓐ.
4. Loosen the oil filter Ⓐ with an oil filter wrench by turning it counterclockwise. Then remove the oil filter by turning it by hand.
5. Wipe the engine oil filter sealing surface with a clean rag.
6. Coat the gasket on the new filter with clean engine oil.
7. Screw on the oil filter until a slight resistance is felt, then tighten an additional 2/3 turn.
8. Start the engine and check for leakage around the oil filter. Correct as required.
9. Turn the engine off and wait more than 10 minutes. Check the oil level. Add engine oil if necessary.

⚠ CAUTION

- **NISSAN recommends using Genuine NISSAN CVT Fluid NS-3 ONLY in NISSAN CVTs. Do not mix with other fluids.**
- **Do not use Automatic transmission fluid (ATF) or Manual transmission fluid in a NISSAN CVT, as it may damage the CVT. Damage caused by the use of fluids other than recommended is not covered under NISSAN's New Vehicle Limited Warranty.**
- **Using fluids that are not equivalent to Genuine NISSAN CVT Fluid NS-3 may damage the CVT. Damage caused by the use of fluids other than as recommended is not covered under NISSAN's New Vehicle Limited Warranty.**

When checking or replacement of CVT fluid is required, we recommend your NISSAN dealer for servicing.

POWER STEERING FLUID

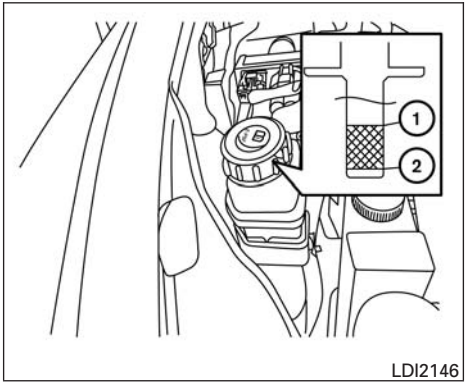

Check the fluid level in the reservoir.

The fluid level should be checked when the fluid is cold at fluid temperatures of 32 to 86°F (0 to 30°C). The fluid level can be checked with the level gauge which is attached to the cap. To check the fluid level, remove the cap. The fluid level should be between the MAX ① and MIN ② lines.

If the fluid is below the MIN ② line, add Genuine NISSAN E-PSF. Remove the cap and fill through the opening.

⚠ CAUTION

- **DO NOT OVERFILL.**
- **Use of a power steering fluid other than Genuine NISSAN E-PSF will prevent the power steering system from operating properly.**
- **Power steering fluid is poisonous and should be stored carefully in marked containers out of the reach of children.**

BRAKE FLUID

⚠ WARNING

- **Use only new fluid from a sealed container. Old, inferior or contaminated fluid may damage the brake system. The use of improper fluids can damage the brake system and affect the vehicle's stopping ability.**
- **Clean the filler cap before removing.**
- **Brake fluid is poisonous and should be stored carefully in marked containers out of reach of children.**

⚠ CAUTION

Do not spill the fluid on any painted surfaces. This will damage the paint. If fluid is spilled, immediately wash the surface with water.

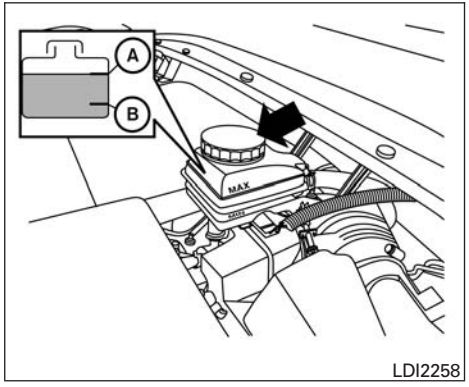

LDI2258

Check the fluid level in the reservoir. If the brake fluid is below the MIN line Ⓑ, the brake warning light will illuminate. Add brake fluid up to the MAX line Ⓐ. Refer to "Recommended fluids/lubricants and capacities" in the "Technical and consumer information" section for the recommended type of brake fluid.

If the brake fluid must be added frequently, the brake system should be thoroughly checked by a NISSAN dealer.

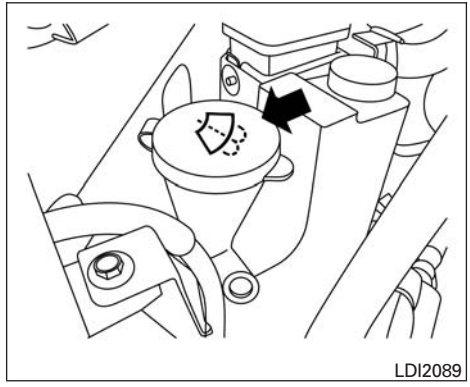
LDI2089

WINDSHIELD-WASHER FLUID RESERVOIR

Fill the windshield-washer fluid reservoir periodically. Add windshield-washer fluid when the low windshield-washer fluid warning light comes on.

To fill the windshield-washer fluid reservoir, lift the cap off the reservoir and pour the windshield-washer fluid into the reservoir opening.

Add a washer solvent to the washer for better cleaning. In the winter season, add a windshield-washer antifreeze. Follow the manufacturer's instructions for the mixture ratio.

Refill the reservoir more frequently when driving conditions require an increased amount of windshield-washer fluid.

Recommended fluid is Genuine NISSAN Windshield Washer Concentrate Cleaner & Antifreeze or equivalent.

⚠ CAUTION

- **Do not substitute engine antifreeze coolant for windshield-washer fluid. This may result in damage to the paint.**
- **Do not fill the windshield-washer fluid reservoir with washer fluid concentrates at full strength. Some methyl alcohol based washer fluid concentrates may permanently stain the grille if spilled while filling the windshield-washer fluid reservoir.**
- **Pre-mix washer fluid concentrates with water to the manufacturer's recommended levels before pouring the fluid into the windshield-washer fluid reservoir. Do not use the windshield-washer fluid reservoir to mix the washer fluid concentrate and water.**

- Keep the battery surface clean and dry. Clean the battery with a solution of baking soda and water.
- Make certain the terminal connections are clean and securely tightened.
- If the vehicle is not to be used for 30 days or longer, disconnect the negative (-) battery terminal cable to prevent discharge.

NOTE:

Care should be taken to avoid situations that can lead to potential battery discharge and potential no-start conditions such as:

1. Installation or extended use of electronic accessories that consume battery power when the engine is not running (Phone chargers, GPS, DVD players, etc.).
2. Vehicle is not driven regularly and/or only driven short distances. In these cases, the battery may need to be charged to maintain battery health.

⚠ WARNING

- **Do not expose the battery to flames, an electrical spark or a cigarette. Hydrogen gas generated by the battery is explosive. Explosive gases can cause blindness or injury. Do not allow battery fluid to contact your skin, eyes, fabrics or painted surfaces. Sulfuric acid can cause blindness or injury. After touching a battery or battery cap, do not touch or rub your eyes. Thoroughly wash your hands. If the acid contacts your eyes, skin or clothing, immediately flush with water for at least 15 minutes and seek medical attention.**
- **The Hybrid vehicle uses a special 12-volt battery. If the 12-volt battery needs to be replaced, use a battery of the same design. Using the wrong battery can cause hydrogen gas to build up in the vehicle , which could lead to explosion and personal injury.**
- **When working on or near a battery, always wear suitable eye protection and remove all jewelry.**
- **Battery posts, terminals and related accessories contain lead and lead compounds. Wash hands after handling.**
- **Keep battery out of the reach of children.**

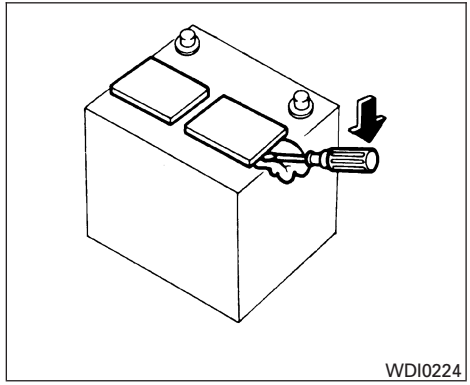

1. Remove the vent caps with a screwdriver as shown. Use a cloth to protect the battery case.

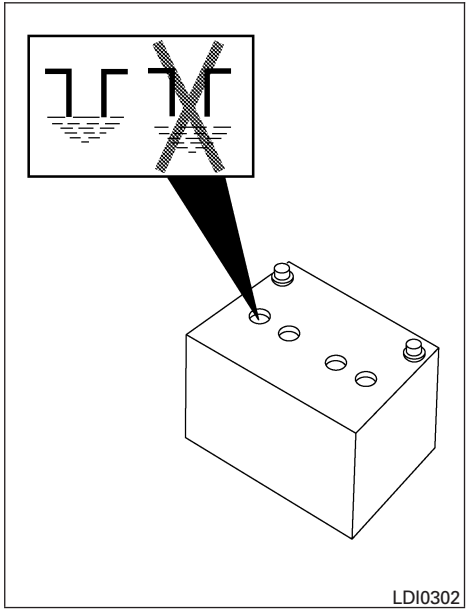

2. Check the fluid level in each cell. If it is necessary to add fluid, add only distilled water to bring the level up to the bottom of the filler opening. **Do not overfill.** Reinstall the vent caps.

Vehicles operated in high temperatures or under severe conditions require frequent checks of the battery fluid level.

JUMP STARTING

If jump starting is necessary, refer to “Jump starting” in the “In case of emergency” section of this manual for additional information. If the engine does not start by jump starting, the battery may have to be replaced. Contact a NISSAN dealer.

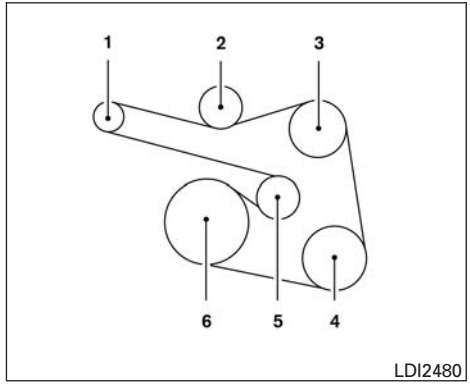

1. Super charger pulley
2. Idler pulley
3. Water pump pulley
4 Air conditioner compressor pulley
5. Drive belt automatic tensioner pulley
6. Crankshaft pulley

⚠ WARNING

Be sure the ignition key is in the OFF or LOCK position before servicing drive belt. The engine could rotate unexpectedly.

1. Visually inspect the belt for signs of unusual wear, cuts, fraying or looseness. If the belt is in poor condition or is loose, have it replaced or adjusted by a NISSAN dealer.
2. Have the belt checked regularly for condition and tension in accordance with the maintenance schedule found in your “NISSAN Service and Maintenance Guide”.

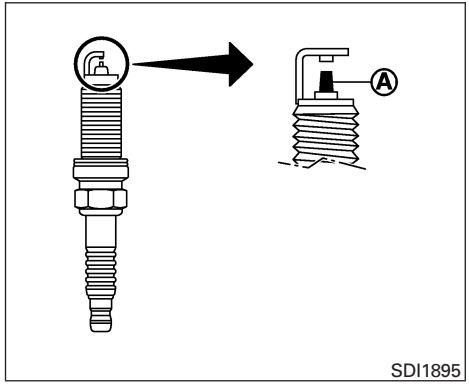

REPLACING SPARK PLUGS

Iridium-tipped spark plugs

It is not necessary to replace iridium-tipped Ⓐ spark plugs as frequently as conventional type spark plugs because they last much longer. Follow the maintenance log shown in the “NISSAN Service and Maintenance Guide”. Do not service iridium-tipped spark plugs by cleaning or regapping.

- **Always replace spark plugs with recommended or equivalent ones.**

⚠ WARNING

Be sure the engine and ignition switch are off and that the parking brake is engaged securely.

⚠ CAUTION

Be sure to use the correct socket to remove the spark plugs. An incorrect socket can damage the spark plugs.

If replacement is required, see your NISSAN dealer for assistance.

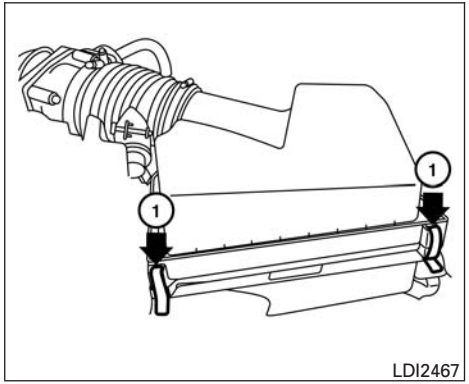

LDI2467

Clean and replace the air cleaner filter according to the maintenance log shown in the “NISSAN Service and Maintenance Guide”. When replacing the filter, wipe the inside of the air cleaner filter housing and the cover with a damp cloth.

To remove the air cleaner filter:

1. Unlatch the clips ① and move the air cleaner cover upward.

Remove the air cleaner filter and wipe the inside of the air cleaner filter housing and the cover with a damp cloth.

NOTE:

After installing a new air cleaner, make sure the air cleaner cover is seated in the housing and latch the clips ①.

⚠WARNING

- **Operating the engine with the air cleaner removed can cause you or others to be burned. The air cleaner not only cleans the air, it stops the flame if the engine backfires. If it isn’t there, and the engine backfires, you could be burned. Do not drive with the air cleaner removed, and be careful when working on the engine with the air cleaner removed.**
- **Never pour fuel into the throttle body or attempt to start the engine with the air cleaner removed. Doing so could result in serious injury.**

IN-CABIN MICROFILTER

The in-cabin microfilter restricts the entry of airborne dust and pollen particles and reduces some objectionable outside odors. The filter is located behind the glove box. Refer to the “NISSAN Service and Maintenance Guide” for change intervals.

If replacement is required, see your NISSAN dealer.

CLEANING

If your windshield is not clear after using the windshield-washer or if a wiper blade chatters when running, wax or other material may be on the blade or windshield.

Clean the outside of the windshield with a washer solution or a mild detergent. Your windshield is clean if beads do not form when rinsing with clear water.

Clean each blade by wiping it with a cloth soaked in a washer solution or a mild detergent. Then rinse the blades with clear water. If your windshield is still not clear after cleaning the blades and using the wiper, replace the blades.

⚠ CAUTION

Worn windshield wiper blades can damage the windshield and impair driver vision.

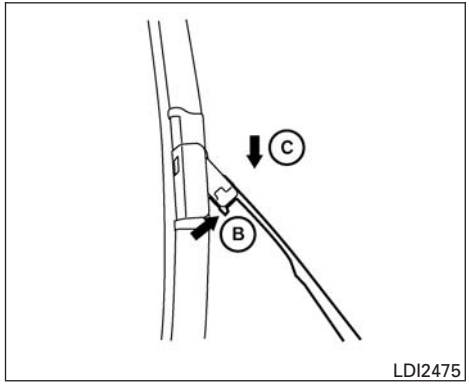

REPLACING

Replace the wiper blades if they are worn.

1. Lift the wiper arm away from the windshield.
2. Push the release tab Ⓑ then move the wiper blade down the wiper arm to remove.
3. Remove the wiper blade from wiper arm Ⓒ.
4. Insert the new wiper blade onto the wiper arm until it clicks into place.
5. Rotate the wiper blade so the dimple is in the groove.
6. Return the wiper to its original position and release it until it has made contact with the windshield.

⚠ CAUTION

- **After wiper blade replacement, return the wiper arm to its original position; otherwise it may be damaged when the hood is opened.**
- **Make sure the wiper blades contact the glass; otherwise the arms may be damaged from wind pressure.**

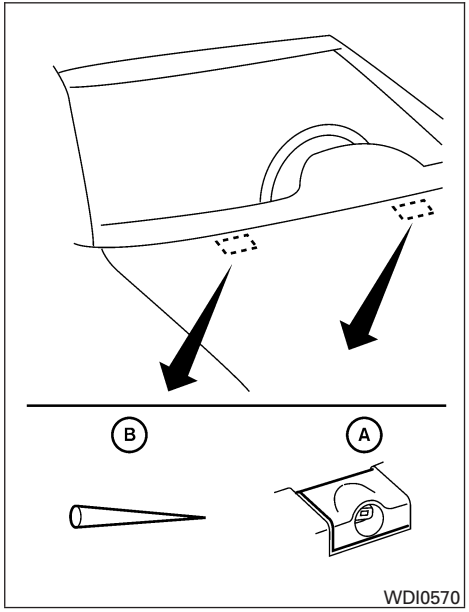

If you wax the surface of the hood, be careful not to let wax get into the windshield-washer nozzle Ⓐ. This may cause clogging or improper windshield-washer operation. If wax gets into the nozzle, remove it with a needle or small pin Ⓑ.

Rear window wiper blade

Contact a NISSAN dealer if checking or replacement is required.

If the brakes do not operate properly, have the brakes checked by a NISSAN dealer.

Self-adjusting brakes

Your vehicle is equipped with self-adjusting brakes.

The front and rear disc-type brakes self-adjust every time the brake pedal is applied.

⚠ WARNING

See a NISSAN dealer for a brake system check if the brake pedal height does not return to normal.

Brake pad wear indicators

The disc brake pads on your vehicle have audible wear indicators. When a brake pad requires replacement, a high pitched scraping or screeching sound will be heard when the vehicle is in motion. The noise will be heard whether or not the brake pedal is depressed. Have the brakes checked as soon as possible if the wear indicator sound is heard.

Under some driving or climate conditions, occasional brake squeak, squeal or other noise may be heard. Occasional brake noise during light to moderate stops is normal and does not affect the function or performance of the brake system.

Proper brake inspection intervals should be followed. For additional information regarding brake inspections, refer to the appropriate maintenance schedule information in the “NISSAN Service and Maintenance Guide”.

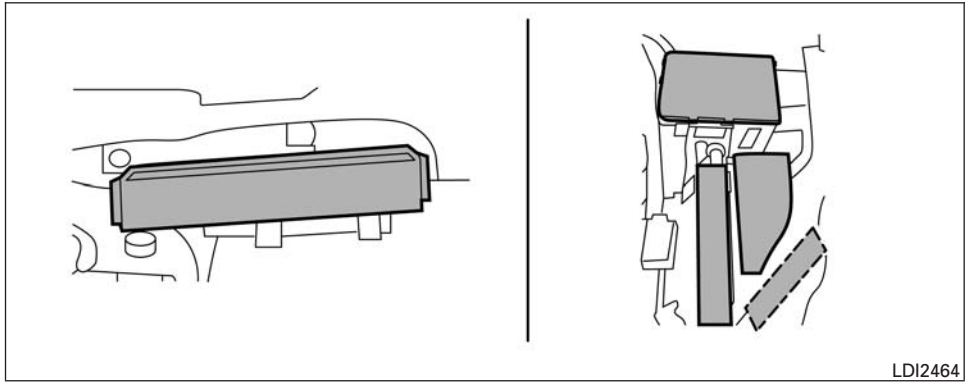

ENGINE COMPARTMENT

⚠ CAUTION

Never use a fuse of a higher or lower amperage rating than specified on the fuse box cover. This could damage the electrical system or cause a fire.

If any electrical equipment does not come on, check for an open fuse.

1. Be sure the ignition switch and the headlight switch are OFF.
2. Open the engine hood.
3. Remove the fuse box cover by pushing the tab and lifting the cover up.
4. Remove the fuse with the fuse puller. The fuse puller is located in the fuse block in the passenger compartment.

Fusible links

If the electrical equipment does not operate and fuses are in good condition, check the fusible links. If any of these fusible links are melted, replace with only Genuine NISSAN parts.

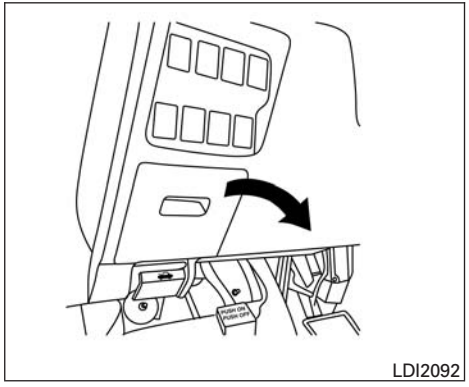

LDI2092

PASSENGER COMPARTMENT

⚠CAUTION

Never use a fuse of a higher or lower amperage rating than specified on the fuse box cover. This could damage the electrical system or cause a fire.

If any electrical equipment does not operate, check for an open fuse.

1. Be sure the ignition switch and the headlight switch are OFF.
2. Pull the fuse box cover to remove.
3. Remove the fuse with the fuse puller.

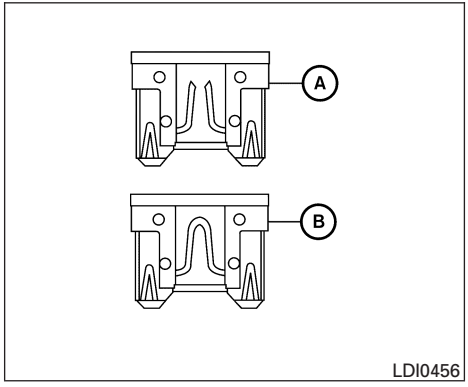

LDI0456

4. If the fuse is open Ⓐ, replace it with an equivalent good fuse Ⓑ.
5. Reverse step 2 to reinstall the box cover.
6. If a new fuse also opens, have the electrical system checked and repaired by a NISSAN dealer.

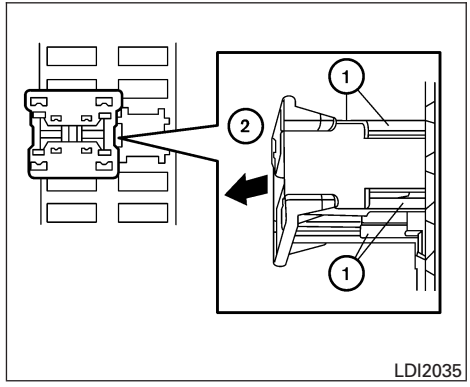

LDI2035

Extended storage switch

If any electrical equipment does not operate, remove the extended storage switch and check for an open fuse.

NOTE:

The extended storage switch is used for long term vehicle storage. Even if the extended storage switch is broken it is not necessary to replace it. Replace only the open fuse in the switch with a new fuse.

How to remove the extended storage switch:

1. To remove the extended storage switch, be sure the ignition switch is in the OFF or LOCK position.
2. Be sure the headlight switch is in the OFF position.
3. Remove the fuse box cover.
4. Pinch the locking tabs ① found on each side of the storage switch.
5. Pull the storage switch straight out from the fuse box ②.

⚠ CAUTION

Be careful not to allow children to swallow the battery or removed parts.

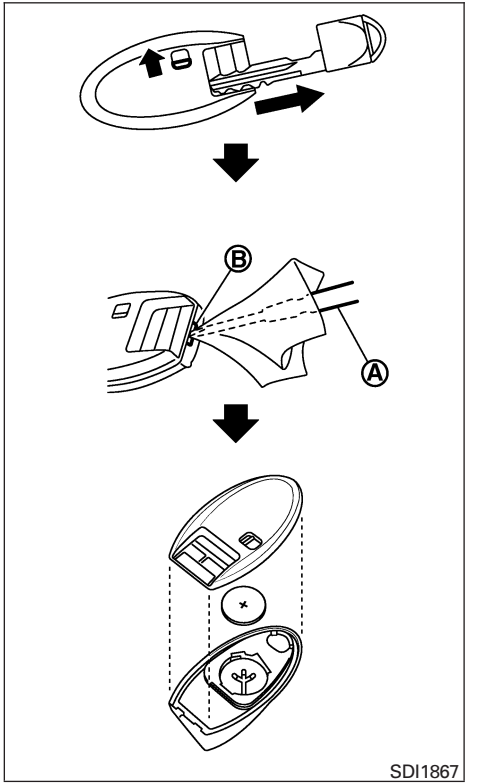

NISSAN INTELLIGENT KEY®

Replace the battery in the Intelligent Key as follows:

1. Remove the mechanical key from the Intelligent Key.
2. Insert a small screwdriver Ⓐ into the slit Ⓑ of the corner and twist it to separate the upper part from the lower part. Use a cloth to protect the casing.
3. Replace the battery with a new one.

   Recommended battery: CR2025 or equivalent.

   - Do not touch the internal circuit and electric terminals as doing so could cause a malfunction.
   - Hold the battery by the edges. Holding the battery across the contact points will seriously deplete the storage capacity.
   - Make sure that the + side faces the bottom of the case.

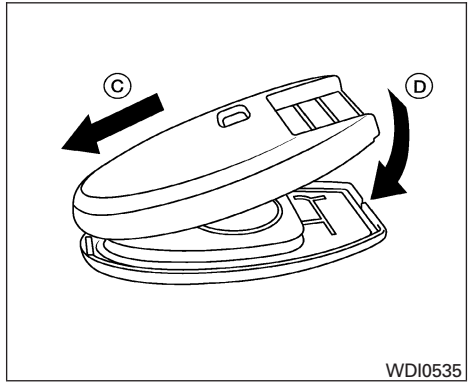

4. Close the lid securely as illustrated Ⓒ Ⓓ.
5. Operate the buttons to check the operation.

See a NISSAN dealer if you need assistance for replacement.

FCC Notice:

For USA:
This device complies with Part 15 of the FCC Rules. Operation is subject to the following two conditions: (1) This device may not cause harmful interference, and (2) this device must accept any interference received, including interference that may cause undesired operation.

Note: Changes or modifications not expressly approved by the party responsible for compliance could void the user's authority to operate the equipment.

For Canada:
This device complies with Industry Canada licence-exempt RSS standard(s). Operation is subject to the following two conditions: (1) this device may not cause interference, and (2) this device must accept any interference, including interference that may cause undesired operation of the device.

HEADLIGHTS

Replacing the halogen headlight bulb

If bulb replacement is required, see your NISSAN dealer.

⚠ CAUTION

- **Aiming is not necessary after replacing the bulb. When aiming adjustment is necessary, contact a NISSAN dealer.**
- **Do not leave the headlight assembly open without a bulb installed for a long period of time. Dust, moisture, smoke, etc. entering the headlight body may affect bulb performance. Remove the bulb from the headlight assembly just before a replacement bulb is installed.**
- **Only touch the base when handling the bulb. Never touch the glass envelope. Touching the glass could significantly affect bulb life and/or headlight performance.**
- **High pressure halogen gas is sealed inside the halogen bulb. The bulb may break if the glass envelope is scratched or the bulb is dropped.**
- **Use the same number and wattage as shown in the chart.**

Fog may temporarily form inside the lenses of the exterior lights in the rain or in a car wash. A temperature difference between the inside and the outside of the lens causes the fog. This is not a malfunction. If large drops of water collect inside the lens, contact a NISSAN dealer.

FOG LIGHTS

Replacing the fog light bulb

If bulb replacement is required, see your NISSAN dealer.

⚠ CAUTION

- **High pressure halogen gas is sealed inside the halogen bulb. The bulb may break if the glass envelope is scratched or the bulb is dropped.**
- **When handling the bulb, do not touch the glass envelope.**
- **Use the same number and wattage as originally installed as shown in the chart.**
- **Do not leave the bulb out of the fog light for a long period of time as dust, moisture and smoke may enter the fog light body and affect the performance of the fog light.**

EXTERIOR AND INTERIOR LIGHTS

Item	Wattage (W)	Bulb No.
Headlight assembly*		
High	60	HB3
Low	55	H11
Park	—	—
Turn	21	WY21W
Sidemarker	5	WY5W
Daytime running lights (if so equipped)	55	H11
Front fog lights	55	H11
Map light*	—	—
Footwell light (if so equipped)	3.4	158
Personal lights	—	P1Y
Glove box light*	—	158
Step light (if so equipped)	3.4	194
Courtesy light*	—	—
Vanity mirror light	2	—
Cargo light	—	AL1X
High-mounted stop light*	—	—
Rear combination light		
Tail/Stop*	5/21	7443
Turn	21	WY21W
Backup (reversing)*	21	W16W
License plate light*	5	W5W

Always check with the Parts Department at a NISSAN dealer for the latest parts information.

* See a NISSAN dealer for replacement.

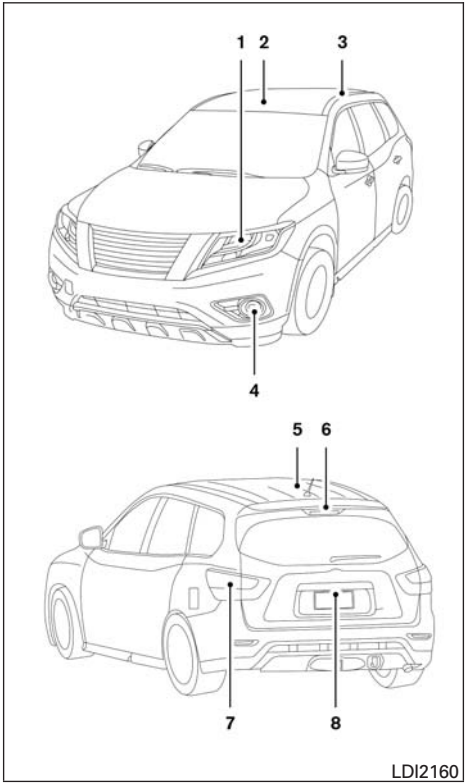

1. Headlight assembly
2 Map light
3. Personal light
4. Fog light
5. Cargo light
6. High-mounted stop light
7. Rear combination light
8. License plate light

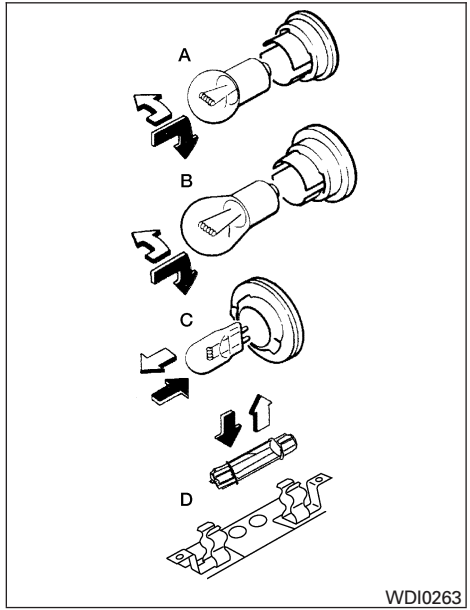

Replacement procedures

All other lights are either type A, B, C or D. When replacing a bulb, first remove the lens, lamp and/or cover.

⇧ Indicates bulb removal

⬆ Indicates bulb installation

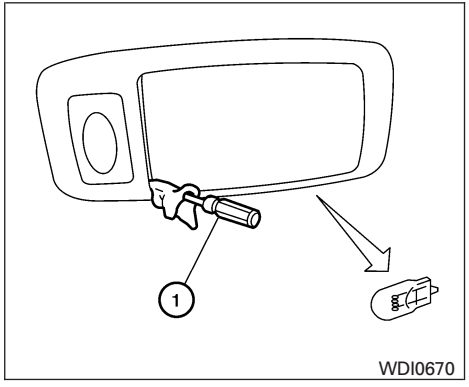

Personal lights

Use a cloth to protect the housing and suitable tool ① to remove lens.

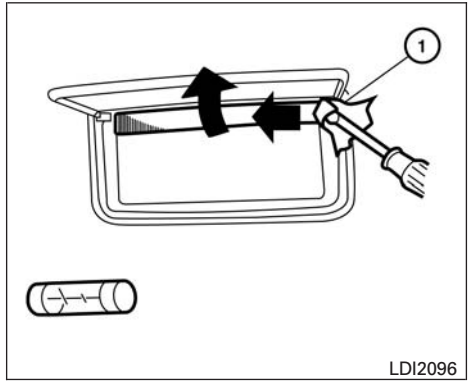

Vanity mirror

Use a cloth ① to protect the housing and suitable tool to remove lens.

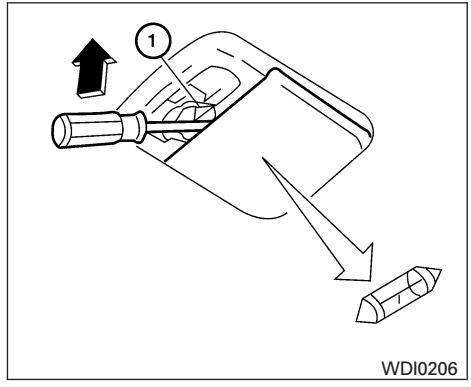

Cargo light

Use a cloth ① to protect the housing and suitable tool to remove lens.

If you have a flat tire, refer to "Flat tire" in the "In case of emergency" section of this manual for additional information.

TIRE PRESSURE

Tire Pressure Monitoring System (TPMS)

⚠WARNING

Radio waves could aversely effect electric medical equipment. Those who use a pacemaker should contact the electric medical equipment manufacturer for the possible influences before use.

This vehicle is equipped with the Tire Pressure Monitoring System (TPMS). It monitors tire pressure of all tires except the spare. When the low tire pressure warning light is lit and the Tire Pressure Low - Add Air warning appears in the vehicle information display, one or more of your tires is significantly under-inflated. If equipped, the system also displays pressure of all tires (except the spare tire) on the display screen by sending a signal from a sensor that is installed in each wheel.

The TPMS will activate only when the vehicle is driven at speeds above 16 MPH (25 km/h). Also, this system may not detect a sudden drop in tire pressure (for example a flat tire while driving).

For additional information, refer to "Low tire pressure warning light" in the "Instruments and controls" section and "Flat tire" in the "In case of emergency" section.

Tire inflation pressure

Check the tire pressures (including the spare) often and always prior to long distance trips. The recommended tire pressure specifications are shown on the F.M.V.S.S./C.M.V.S.S. certification label or the Tire and Loading Information label under the "Cold Tire Pressure" heading. The Tire and Loading Information label is affixed to the driver side center pillar. Tire pressures should be checked regularly because:

- Most tires naturally lose air over time.
- Tires can lose air suddenly when driven over potholes or other objects or if the vehicle strikes a curb while parking.

The tire pressures should be checked when the tires are cold. The tires are considered COLD after the vehicle has been parked for 3 or more hours, or driven less than 1 mile (1.6 km) at moderate speeds.

The TPMS with Easy Fill Tire Alert provides visual and audible signals outside the vehicle for inflating the tires to the recommended COLD tire pressure. For additional information, refer to "TPMS with Easy Fill Tire Alert" in the "Starting and driving" section.

Incorrect tire pressure, including under inflation, may adversely affect tire life and vehicle handling.

⚠WARNING

- **Improperly inflated tires can fail suddenly and cause an accident.**
- **The Gross Vehicle Weight Rating (GVWR) is located on the F.M.V.S.S./C.M.V.S.S. certification label. The vehicle weight capacity is indicated on the Tire and Loading Information label. Do not load your vehicle beyond this capacity. Overloading your vehicle may result in reduced tire life, unsafe operating conditions due to premature tire failure, or unfavorable handling characteristics and could also lead to a serious accident. Loading beyond the specified capacity may also result in failure of other vehicle components.**
- **Before taking a long trip, or whenever you heavily load your vehicle, use a tire pressure gauge to ensure that the tire pressures are at the specified level.**

- **For additional information regarding tires, refer to "Important Tire Safety Information" (US) or "Tire Safety Information" (Canada) in the Warranty Information Booklet.**

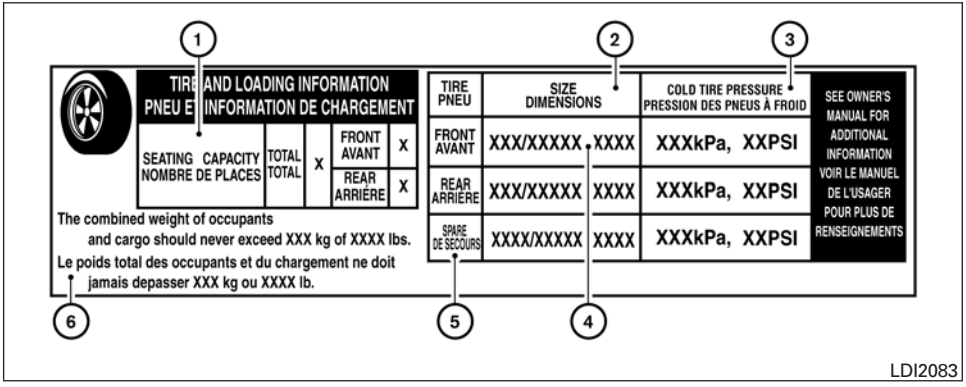

Tire and loading information label

① Seating capacity: The maximum number of occupants that can be seated in the vehicle.

② Original tire size: The size of the tires originally installed on the vehicle at the factory.

③ Cold tire pressure: Inflate the tires to this pressure when the tires are cold. Tires are considered COLD after the vehicle has been parked for 3 or more hours, or driven less than 1 mile (1.6 km) at moderate speeds. The recommended cold tire inflation is set by the manufacturer to provide the best balance of tire wear, vehicle handling, driveability, tire noise, etc., up to the vehicle's GVWR.

④ Tire size - refer to "Tire labeling" in this section.

⑤ Spare tire size.

⑥ Vehicle load limit: Refer to "Vehicle loading information" in the "Technical and consumer information" section.

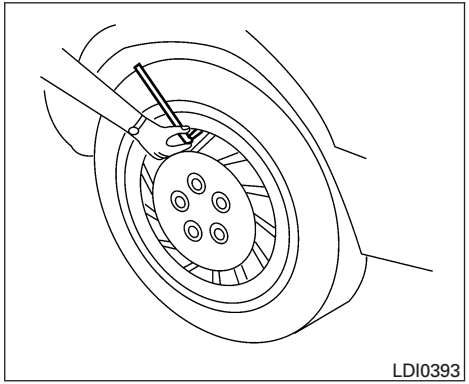

Checking tire pressure

1. Remove the valve stem cap from the tire.
2. Press the pressure gauge squarely onto the valve stem. Do not press too hard or force the valve stem sideways, or air will escape. If the hissing sound of air escaping from the tire is heard while checking the pressure, reposition the gauge to eliminate this leakage.
3. Remove the gauge.
4. Read the tire pressure on the gauge stem and compare to the specification shown on the Tire and Loading Information label.
5. Add air to the tire as needed. If too much air is added, press the core of the valve stem briefly with the tip of the gauge stem to release pressure. Recheck the pressure and add or release air as needed.
6. Install the valve stem cap.
7. Check the pressure of all other tires, including the spare.

Size	Cold Tire Inflation Pressure
Front and Rear Original Tire: 235/65R18	33 PSI, 230 kPa
Front and Rear Original Tire: 235/55R20	33 PSI, 230 kPa
Spare Tire: T165/90D18	60 PSI, 420 kPa

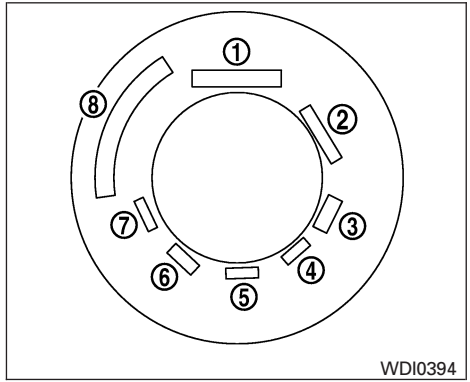

Example

TIRE LABELING

Federal law requires tire manufacturers to place standardized information on the sidewall of all tires. This information identifies and describes the fundamental characteristics of the tire and also provides the tire identification number (TIN) for safety standard certification. The TIN can be used to identify the tire in case of a recall.

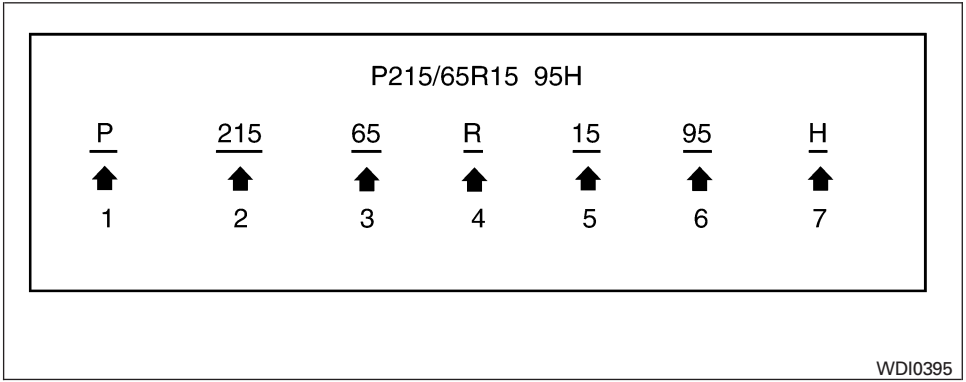

Example

① Tire size (example: P215/65R15 95H)

1. P: The “P” indicates the tire is designed for passenger vehicles (not all tires have this information).
2. Three-digit number (215): This number gives the width in millimeters of the tire from sidewall edge to sidewall edge.
3. Two-digit number (65): This number, known as the aspect ratio, gives the tire’s ratio of height to width.
4. R: The “R” stands for radial.
5. Two-digit number (15): This number is the wheel or rim diameter in inches.
6. Two- or three-digit number (95): This number is the tire’s load index. It is a measurement of how much weight each tire can support. You may not find this information on all tires because it is not required by law.
7. H: Tire speed rating. You should not drive the vehicle faster than the tire speed rating.

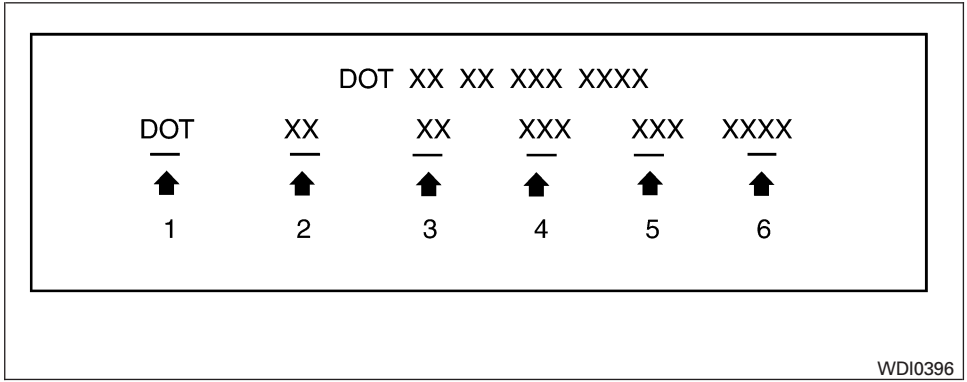

Example

② TIN (Tire Identification Number) for a new tire (example: DOT XX XX XXX XXXX)

1. DOT: Abbreviation for the “Department Of Transportation”. The symbol can be placed above, below or to the left or right of the Tire Identification Number.
2. Two-digit code: Manufacturer’s identification mark.
3. Two-digit code: Tire size.
4. Three-digit code: Tire type code (Optional).
5. Three-digit code: Date of Manufacture.
6. Four numbers represent the week and year the tire was built. For example, the numbers 3103 means the 31st week of 2003. If these numbers are missing then look on the other sidewall of the tire.

③ Tire ply composition and material

The number of layers or plies of rubber-coated fabric in the tire. Tire manufacturers also must indicate the materials in the tire, which include steel, nylon, polyester and others.

④ Maximum permissible inflation pressure

This number is the greatest amount of air pressure that should be put in the tire. Do not exceed the maximum permissible inflation pressure.

⑤ Maximum load rating

This number indicates the maximum load in kilograms and pounds that can be carried by the tire. When replacing the tires on the vehicle, always use a tire that has the same load rating as the factory installed tire.

⑥ Term of “tubeless” or “tube type”

Indicates whether the tire requires an inner tube (“tube type”) or not (“tubeless”).

⑦ The word “radial”

The word “radial” is shown if the tire has radial structure.

⑧ Manufacturer or brand name

Manufacturer or brand name is shown.

Other Tire-related Terminology

In addition to the many terms that are defined throughout this section, Intended Outboard Sidewall is (1) the sidewall that contains a whitewall, bears white lettering or bears manufacturer, brand, and/or model name molding that is higher or deeper than the same molding on the other sidewall of the tire, or (2) the outward facing sidewall of an asymmetrical tire that has a particular side that must always face outward when mounted on a vehicle.

TYPES OF TIRES

⚠ WARNING

- **When changing or replacing tires, be sure all four tires are of the same type (i.e., Summer, All Season or Snow) and construction. A NISSAN dealer may be able to help you with information about tire type, size, speed rating and availability.**
- **Replacement tires may have a lower speed rating than the factory equipped tires, and may not match the potential maximum vehicle speed. Never exceed the maximum speed rating of the tire.**
- **Replacing tires with those not originally specified by NISSAN could affect the proper operation of the low tire pressure warning system.**
- **For additional information regarding tires, refer to “Important Tire Safety Information” (US) or “Tire Safety Information” (Canada) in the Warranty Information Booklet.**

All season tires

NISSAN specifies All Season tires on some models to provide good performance all year, including snowy and icy road conditions. All Season tires are identified by ALL SEASON and/or M&S on the tire sidewall. Snow tires have better snow traction than All Season tires and may be more appropriate in some areas.

Summer tires

NISSAN specifies summer tires on some models to provide superior performance on dry roads. Summer tire performance is substantially reduced in snow and ice. Summer tires do not have the tire traction rating “M&S” on the tire sidewall.

If you plan to operate your vehicle in snowy or icy conditions, NISSAN recommends the use of SNOW tires or ALL SEASON tires on all four wheels.

Snow tires

If snow tires are needed, it is necessary to select tires equivalent in size and load rating to the original equipment tires. If you do not, it can adversely affect the safety and handling of your vehicle.

Generally, snow tires have lower speed ratings than factory equipped tires and may not match the potential maximum vehicle speed. Never exceed the maximum speed rating of the tire.

If you install snow tires, they must be the same size, brand, construction and tread pattern on all four wheels.

For additional traction on icy roads, studded tires may be used. However, some U.S. states and Canadian provinces prohibit their use. Check local, state and provincial laws before installing studded tires. Skid and traction capabilities of studded snow tires on wet or dry surfaces may be poorer than that of non-studded snow tires.

TIRE CHAINS

⚠ CAUTION

Tire chains/cables should not be installed on 235/55R20 size tires. Installation of the tire chains/cables on 235/55R20 size tires will cause damage to the vehicle. If you plan to use tire chains/cables, you should install 235/65R18 size tires on your vehicle.

Use of tire chains may be prohibited according to location. Check the local laws before installing tire chains. When installing tire chains, make sure they are the proper size for the tires on your vehicle and are installed according to the chain manufacturer's suggestions. **Use only SAE class "S" chains.** Class "S" chains are used on vehicles with restricted tire to vehicle clearance. Vehicles that can use Class "S" chains are designed to meet the minimum clearances between the tire and the closest vehicle suspension or body component required to accommodate the use of a winter traction device (tire chains or cables). The minimum clearances are determined using the factory equipped tire size. Other types may damage your vehicle. Use chain tensioners when recommended by the tire chain manufacturer to ensure a tight fit. Loose end links of the tire chain must be secured or removed to prevent the possibility of whipping action damage to the fenders or underbody. If possible, avoid fully loading your vehicle when using tire chains. In addition, drive at a reduced speed. Otherwise, your vehicle may be damaged and/or vehicle handling and performance may be adversely affected.

Do not use tire chains on dry roads. Driving with chains in such conditions can cause damage to the various mechanisms of the vehicle due to some overstress.

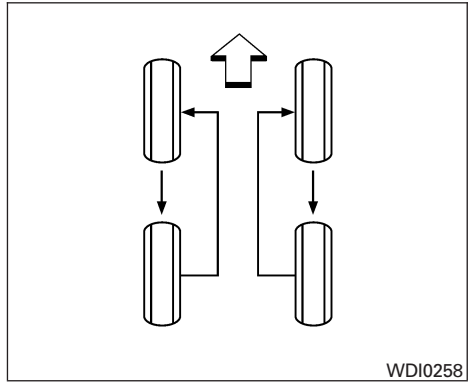

CHANGING WHEELS AND TIRES

Tire rotation

NISSAN recommends rotating the tires every 7,500 miles (12,000 km).

Refer to "Flat tire" in the "In case of emergency" section of this manual for tire replacing procedures.

As soon as possible, tighten the wheel nuts to the specified torque with a torque wrench.

Wheel nut tightening torque:
83 ft-lb (113 N·m)

The wheel nuts must be kept tightened to specifications at all times. It is recommended that wheel nuts be tightened to specification at each tire rotation interval.

⚠WARNING

- **After rotating the tires, check and adjust the tire pressure.**
- **Retighten the wheel nuts when the vehicle has been driven for 600 miles (1,000 km) (also in cases of a flat tire, etc.).**
- **Do not include the spare tire in the tire rotation.**
- **For additional information regarding tires, refer to "Important Tire Safety Information" (US) or "Tire Safety Information" (Canada) in the Warranty Information Booklet.**

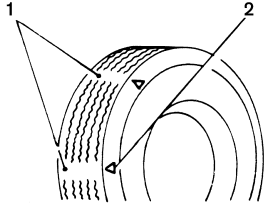

WDI0259

Tire wear and damage

1. Wear indicator
2. Location mark

⚠WARNING

- **Tires should be periodically inspected for wear, cracking, bulging or objects caught in the tread. If excessive wear, cracks, bulging or deep cuts are found, the tire(s) should be replaced.**
- **The original tires have built-in tread wear indicators. When the wear indicators are visible, the tire(s) should be replaced.**
- **Tires degrade with age and use. Have tires, including the spare, over 6 years old checked by a qualified technician because some tire damage may not be obvious. Replace the tires as necessary to prevent tire failure and possible personal injury.**
- **Improper service of the spare tire may result in serious personal injury. If it is necessary to repair the spare tire, contact a NISSAN dealer.**
- **For additional information regarding tires, refer to "Important Tire Safety Information" (US) or "Tire Safety Information" (Canada) in the Warranty Information Booklet.**

Replacing wheels and tires

When replacing a tire, use the same size, tread design, speed rating and load carrying capacity as originally equipped. Recommended types and sizes are shown in “Wheels and tires” in the “Technical and consumer information” section of this manual.

WARNING

- **The use of tires other than those recommended or the mixed use of tires of different brands, construction (bias, bias-belted or radial), or tread patterns can adversely affect the ride, braking, handling, VDC system, ground clearance, body-to-tire clearance, tire chain clearance, speedometer calibration, headlight aim and bumper height. Some of these effects may lead to accidents and could result in serious personal injury.**
- **If your vehicle was originally equipped with 4 tires that were the same size and you are only replacing 2 of the 4 tires, install the new tires on the rear axle. Placing new tires on the front axle may cause loss of vehicle control in some driving conditions and cause an accident and personal injury.**
- **If the wheels are changed for any reason, always replace with wheels which have the same off-set dimension. Wheels of a different off-set could cause premature tire wear, degrade vehicle handling characteristics, affect the VDC system and/or interference with the brake discs/drums. Such interference can lead to decreased braking efficiency and/or early brake pad/shoe wear. Refer to “Wheels and tires” in the “Technical and consumer information” section of this manual for wheel off-set dimensions.**
- **When a spare tire is mounted or a wheel is replaced, tire pressure will not be indicated, the TPMS will not function and the low tire pressure warning light will flash for approximately 1 minute. The light will remain on after 1 minute. Contact your NISSAN dealer as soon as possible for tire replacement and/or system resetting.**
- **Replacing tires with those not originally specified by NISSAN could affect the proper operation of the TPMS.**
- **Do not install a damaged or deformed wheel or tire even if it has been repaired. Such wheels or tires could have structural damage and could fail without warning.**
- **The use of retread tires is not recommended.**
- **For additional information regarding tires, refer to “Important Tire Safety Information” (US) or “Tire Safety Information” (Canada) in the Warranty Information Booklet.**

4x4 Four-wheel drive models

CAUTION

Always use tires of the same type, size, brand, construction (bias, bias-belted or radial), and tread pattern on all four wheels. Failure to do so may result in a circumference difference between tires on the front and rear axles which will cause excessive tire wear and may damage the transmission, transfer case and differential gears.

If excessive tire wear is found, it is recommended that all four tires be replaced with tires of the same size, brand, construction and tread pattern.

The tire pressure and wheel alignment should also be checked and corrected as necessary. Contact a NISSAN dealer.

Wheel balance

Unbalanced wheels may affect vehicle handling and tire life. Even with regular use, wheels can get out of balance. Therefore, they should be balanced as required.

Wheel balance service should be performed with the wheels off the vehicle. Spin balancing the wheels on the vehicle could lead to mechanical damage.

- **For additional information regarding tires, refer to "Important Tire Safety Information" (US) or "Tire Safety Information" (Canada) in the Warranty Information Booklet.**

Care of wheels

- Wash the wheels when washing the vehicle to maintain their appearance.
- Clean the inner side of the wheels when the wheel is changed or the underside of the vehicle is washed.
- Do not use abrasive cleaners when washing the wheels.
- Inspect wheel rims regularly for dents or corrosion. Such damage may cause loss of pressure or poor seal at the tire bead.
- NISSAN recommends waxing the road wheels to protect against road salt in areas where it is used during winter.

Spare tire (TEMPORARY USE ONLY spare tire)

Observe the following precautions if the TEMPORARY USE ONLY spare tire must be used. Otherwise, your vehicle could be damaged or involved in an accident:

⚠ WARNING

- **The spare tire should be used for emergency use only. It should be replaced with the standard tire at the first opportunity to avoid possible tire or differential damage.**
- **Drive carefully while the TEMPORARY USE ONLY spare tire is installed. Avoid sharp turns and abrupt braking while driving.**
- **Periodically check spare tire inflation pressure. Always keep the pressure of the TEMPORARY USE ONLY spare tire at 60 psi (420 kPa, 4.2 bar).**
- **With the TEMPORARY USE ONLY spare tire installed do not drive the vehicle at speeds faster than 50 MPH (80 km/h).**
- **When driving on roads covered with snow or ice, the TEMPORARY USE ONLY spare tire should be used on the rear wheels and the original tire used on the front wheels (drive wheels). Use tire chains only on the front (original) tires.**
- **Tire tread of the TEMPORARY USE ONLY spare tire will wear at a faster rate than the standard tire. Replace the spare tire as soon as the tread wear indicators appear.**
- **Do not use the spare tire on other vehicles.**
- **Do not use more than one spare tire at the same time.**
- **Do not tow a trailer when the TEMPORARY USE ONLY spare tire is installed.**

⚠ CAUTION

- **Do not use tire chains on a TEMPORARY USE ONLY spare tire. Tire chains will not fit properly and may cause damage to the vehicle.**
- **Because the TEMPORARY USE ONLY spare tire is smaller than the original tire, ground clearance is reduced. To avoid damage to the vehicle, do not drive over obstacles. Also, do not drive the vehicle through an automatic car wash since it may get caught.**

MEMO

9 Technical and consumer information

Recommended fluids/lubricants and capacities 9-2
Recommended fuel 9-4
Engine oil and oil filter recommendations 9-6
Air conditioner system refrigerant and oil recommendations 9-7
Specifications 9-8
Engine 9-8
Wheels and tires 9-9
Dimensions and weights 9-9
When traveling or registering your vehicle in another country 9-10
Vehicle identification 9-10
Vehicle identification number (VIN) plate 9-10
Vehicle identification number (chassis number) 9-10
Emission control information label 9-11
Engine serial number 9-11
F.M.V.S.S./C.M.V.S.S. certification label 9-11
Tire and loading information label 9-12
Air conditioner specification label 9-12
Installing front license plate 9-12
Vehicle loading information 9-13
Terms 9-13
Vehicle load capacity 9-14
Securing the load 9-15
Loading tips 9-16
Measurement of weights 9-16
Towing a trailer 9-17
Maximum load limits 9-17
Towing load/specification 9-20
Towing safety 9-21
Flat towing 9-27
Uniform tire quality grading 9-28
Emission control system warranty 9-29
Reporting safety defects 9-29
Readiness for inspection/maintenance (I/M) test 9-30
Event Data Recorders (EDR) (if so equipped) 9-31
Owner's Manual/Service Manual order information . . . 9-31

RECOMMENDED FLUIDS/ LUBRICANTS AND CAPACITIES

The following are approximate capacities. The actual refill capacities may be slightly different. When refilling, follow the procedure described in the "Maintenance and do-it-yourself" section to determine the proper refill capacity.

		Capacity (Approximate)			Recommended Fluids and Lubricants
		US measure	Imp measure	Liter	
Fuel		19-1/2 gal	16-1/4 gal	74 L	▪ For additional information, refer to "Recommended Fuel" in this section.
Engine oil		Drain and refill			▪ For additional information, refer to "Engine oil" in the "Maintenance and do-it-yourself" section.
QR25DER	With oil filter change	6-1/8 qt	5-1/8 qt	5.8 L	▪ Genuine NISSAN engine oil or equivalent ▪ Engine oil with API Certification Mark ▪ Viscosity SAE 0W-20 ▪ For additional information, refer to "Engine oil and oil filter recommendations" in this section. ▪ As an alternative to this recommended oil, SAE 5W-30 conventional petroleum based oil may be used and meets all specifications and requirements necessary to maintain the New Vehicle Limited Warranty.
	Without oil filter change	5-7/8 qt	4-7/8 qt	5.5 L	
Cooling system	With reservoir	2-5/8 gal	2-1/8 gal	9.8 L	▪ Pre-diluted Genuine NISSAN Long Life Antifreeze/Coolant (blue) or equivalent
Inverter cooling system		—	—	—	
Continuously Variable Transmission (CVT) fluid		Refill to the proper level according to the instructions in the "Maintenance and do-it-yourself" section.			▪ Genuine NISSAN CVT Fluid NS-3 ▪ NISSAN recommends using Genuine NISSAN CVT Fluid NS-3 ONLY in NISSAN CVTs. Do not mix with other fluids. Using fluids that are not equivalent to Genuine NISSAN CVT Fluid NS-3 may damage the CVT. Damage caused by the use of fluids other than as recommended is not covered under NISSAN's New Vehicle Limited Warranty.
Power steering fluid (PSF)					▪ Genuine NISSAN E-PSF or equivalent ▪ Use of a power steering fluid other than Genuine NISSAN E-PSF will prevent the power steering system from operating properly.
Differential gear oil		—	—	—	▪ Genuine NISSAN Differential Oil Hypoid Super Semi-synthetic API GL-5, Viscosity SAE 75W-90 ▪ The use of differential gear oil other than the specified may cause vehicle malfunctions and result in non-warranty vehicle repairs.

	Capacity (Approximate)			Recommended Fluids and Lubricants
	US measure	Imp measure	Liter	
Transfer oil	—	—	—	▪ API GL-5, Viscosity SAE 80W-90 or equivalent
Brake fluid	Refill to the proper level according to the instructions in the “Maintenance and do-it-yourself” section.			▪ Genuine NISSAN Super Heavy Duty Brake Fluid or equivalent DOT 3 ▪ Available in mainland U.S.A. through a NISSAN dealer.
Multi-purpose grease	—	—	—	▪ NLGI No. 2 (Lithium Soap base)
Air conditioning system refrigerant	—	—	—	▪ HFC-134a (R-134a) ▪ For additional information, refer to “Air conditioner system refrigerant and oil recommendations” in this section.
Air conditioning system oil	—	—	—	▪ Compressor oil DH-PS or the exact equivalents ▪ For additional information, refer to “Air conditioner system refrigerant and oil recommendations” in this section.
Windshield-washer fluid	1-3/8 gal	1-1/8 gal	5 L	▪ Genuine NISSAN Windshield Washer Concentrate Cleaner & Antifreeze fluid or equivalent

RECOMMENDED FUEL

Use unleaded regular gasoline with an octane rating of at least 87 AKI (Anti-Knock Index) number (Research octane number 91).

⚠ CAUTION

- **Using a fuel other than that specified could adversely affect the emission control system, and may also affect the warranty coverage.**
- **Under no circumstances should a leaded gasoline be used, because this will damage the three-way catalyst.**
- **Do not use E-15 or E-85 fuel in your vehicle. Your vehicle is not designed to run on E-15 or E-85 fuel. Using E-15 or E-85 fuel in a vehicle not specifically designed for E-15 or E-85 fuel can adversely affect the emission control devices and systems of the vehicle. Damage caused by such fuel is not covered by the NISSAN new vehicle limited warranty.**
- **U.S. government regulations require ethanol dispensing pumps to be identified by a small, square, orange and black label with the common abbreviation or the appropriate percentage for that region.**

For additional information, refer to “Recommended fluids/lubricants and capacities” in the “Technical and consumer information” section.

Gasoline specifications

NISSAN recommends using gasoline that meets the World-Wide Fuel Charter (WWFC) specifications where it is available. Many of the automobile manufacturers developed this specification to improve emission control system and vehicle performance. Ask your service station manager if the gasoline meets the WWFC specifications.

Reformulated gasoline

Some fuel suppliers are now producing reformulated gasolines. These gasolines are specially designed to reduce vehicle emissions. NISSAN supports efforts towards cleaner air and suggests that you use reformulated gasoline when available.

Gasoline containing oxygenates

Some fuel suppliers sell gasoline containing oxygenates such as ethanol, MTBE and methanol with or without advertising their presence. NISSAN does not recommend the use of fuels of which the oxygenate content and the fuel compatibility for your NISSAN cannot be readily determined. If in doubt, ask your service station manager.

If you use oxygenate-blend gasoline, please take the following precautions as the usage of such fuels may cause vehicle performance problems and/or fuel system damage.

- **The fuel should be unleaded and have an octane rating no lower than that recommended for unleaded gasoline.**
- **If an oxygenate-blend other than methanol blend is used, it should contain no more than 10% oxygenate. (MTBE may, however, be added up to 15%.)**
- **E-15 fuel contains more than 10% oxygenate. E-15 fuel will adversely affect the emission control devices and systems of the vehicle and should not be used. Damage caused by such fuel is not covered by the NISSAN new vehicle limited warranty.**

- **If a methanol blend is used, it should contain no more than 5% methanol (methyl alcohol, wood alcohol). It should also contain a suitable amount of appropriate cosolvents and corrosion inhibitors. If not properly formulated with appropriate cosolvents and corrosion inhibitors, such methanol blends may cause fuel system damage and/or vehicle performance problems. At this time, sufficient data is not available to ensure that all methanol blends are suitable for use in NISSAN vehicles.**

If any driveability problems such as engine stalling and difficult hot-starting are experienced after using oxygenate-blend fuels, immediately change to a non-oxygenate fuel or a fuel with a low blend of MTBE.

Take care not to spill gasoline during refueling. Gasoline containing oxygenates can cause paint damage.

E–15 fuel

E-15 fuel is a mixture of approximately 15% fuel ethanol and 85% unleaded gasoline. E-15 can only be used in vehicles designed to run on E-15 fuel. Do not use E-15 in your vehicle. U.S. government regulations require fuel ethanol dispensing pumps to be identified with small, square, orange and black label with the common abbreviation or the appropriate percentage for that region.

E–85 fuel

E-85 fuel is a mixture of approximately 85% fuel ethanol and 15% unleaded gasoline. E-85 can only be used in a Flexible Fuel Vehicle (FFV). Do not use E-85 in your vehicle. U.S. government regulations require fuel ethanol dispensing pumps to be identified by a small, square, orange and black label with the common abbreviation or the appropriate percentage for that region.

Aftermarket fuel additives

NISSAN does not recommend the use of any aftermarket fuel additives (for example, fuel injector cleaner, octane booster, intake valve deposit removers, etc.) which are sold commercially. Many of these additives intended for gum, varnish or deposit removal may contain active solvents or similar ingredients that can be harmful to the fuel system and engine.

Octane rating tips

Using unleaded gasoline with an octane rating lower than recommended can cause persistent, heavy “spark knock.” (“Spark knock” is a metallic rapping noise.) If severe, this can lead to engine damage. If you detect a persistent heavy spark knock even when using gasoline of the stated octane rating, or if you hear steady spark knock while holding a steady speed on level roads, have a NISSAN dealer correct the condition. Failure to correct the condition is misuse of the vehicle, for which NISSAN is not responsible.

Incorrect ignition timing may result in spark knock, after-run and/or overheating, which may cause excessive fuel consumption or engine damage. If any of the above symptoms are encountered, have your vehicle checked at a NISSAN dealer.

However, now and then you may notice light spark knock for a short time while accelerating or driving up hills. This is not a cause for concern, because you get the greatest fuel benefit when there is light spark knock for a short time under heavy engine load.

API certification mark

API service symbol

LTI2051

ENGINE OIL AND OIL FILTER RECOMMENDATIONS

Selecting the correct oil

It is essential to choose the correct grade, quality and viscosity engine oil to ensure satisfactory engine life and performance. For additional information, refer to “Recommended fluids/lubricants and capacities” in this section. NISSAN recommends the use of an energy conserving oil in order to improve fuel economy.

Select only engine oils that meet the American Petroleum Institute (API) certification or International Lubricant Standardization and Approval Committee (ILSAC) certification and SAE viscosity standard. These oils have the API certification mark on the front of the container. Oils which do not have the specified quality label should not be used as they could cause engine damage.

Oil additives

NISSAN does not recommend the use of oil additives. The use of an oil additive is not necessary when the proper oil type is used and maintenance intervals are followed.

Oil which may contain foreign matter or has been previously used should not be used.

Oil viscosity

The engine oil viscosity or thickness changes with temperature. Because of this, it is important to select the engine oil viscosity based on the temperatures at which the vehicle will be operated before the next oil change. Choosing an oil viscosity other than that recommended could cause serious engine damage.

Selecting the correct oil filter

Your new NISSAN vehicle is equipped with a high-quality genuine NISSAN oil filter. When replacing, use a genuine NISSAN oil filter or its equivalent for the reason described in “Change intervals.”

Change intervals

The oil and oil filter change intervals for your engine are based on the use of the specified quality oils and filters. Using engine oil and filters that are not of the specified quality, or exceeding recommended oil and filter change intervals could reduce engine life. Damage to the engine caused by improper maintenance or use of incorrect oil and filter quality and/or viscosity is not covered by the NISSAN new vehicle limited warranty.

Your engine was filled with a high-quality engine oil when it was built. You do not have to change the oil before the first recommended change interval. Oil and filter change intervals depend upon how you use your vehicle.

Operation under the following conditions may require more frequent oil and filter changes:

- repeated short distance driving at cold outside temperatures
- driving in dusty conditions
- extensive idling
- towing a trailer
- stop and go commuting

Refer to the “NISSAN Service and Maintenance Guide” for the maintenance schedule.

AIR CONDITIONER SYSTEM REFRIGERANT AND OIL RECOMMENDATIONS

The air conditioner system in your NISSAN vehicle must be charged with the refrigerant HFC-134a (R-134a) and the oil, NISSAN A/C system oil DH-PS or the exact equivalents.

⚠ CAUTION

The use of any other refrigerant or oil will cause severe damage to the air conditioning system and will require the replacement of all air conditioner system components.

The refrigerant HFC-134a (R-134a) in your NISSAN vehicle does not harm the earth’s ozone layer. Although this refrigerant does not affect the earth’s atmosphere, certain government regulations require the recovery and recycling of any refrigerant during automotive air conditioner system service. An NISSAN dealer has the trained technicians and equipment needed to recover and recycle your air conditioner system refrigerant.

Contact an NISSAN dealer when servicing your air conditioner system.

ENGINE

Model		QR25DER
Type		Gasoline, 4-cycle, DOHC
Cylinder arrangement		4-cylinder in-line
Bore x Stroke	in (mm)	3.5 x 3.9 (89.0 x 100.0)
Displacement	cu in (cm^3)	151.82 (2,488)
Firing order		1–3–4–2
Idle speed		
CVT (in “N” position)		No adjustment is necessary.
Ignition timing (degree B.T.D.C. at idle speed)		
CO % at idle		
Spark plug		DILKAR7C9H
Spark plug gap (Nominal)	in (mm)	0.035 (0.9)
Camshaft operation		Timing chain

This spark ignition system complies with the Canadian standard ICES-002.

WHEELS AND TIRES

Wheel type	Offset in (mm)	Size
Aluminum	1.97 (50)	18 x 7.5J
	1.97 (50)	20 x 7.5J
Spare Wheel - Steel	0.98 (25)	18 x 4T
Tire size		235/65R18
		235/55R20
Spare tire		T165/90D18

DIMENSIONS AND WEIGHTS

Overall length	in (mm)	197.2 (5,008)
Overall width	in (mm)	77.2 (1,960)
Overall height		
without roof rack	in (mm)	69.6 (1,768)
with roof rack	in (mm)	70.2 (1,783)
Front and Rear Track	in (mm)	65.7 (1,670)
Wheelbase	in (mm)	114.2 (2,900)
Gross vehicle weight rating	lb (kg)	Refer to the “F.M.V.S.S./C.M.V.S.S. certification label” on the center pillar between the driver’s side front and rear doors.
Gross axle weight rating		
Front	lb (kg)	
Rear	lb (kg)	

WHEN TRAVELING OR REGISTERING YOUR VEHICLE IN ANOTHER COUNTRY

When planning to drive your NISSAN vehicle in another country, you should first find out if the fuel available is suitable for your vehicle's engine.

Using fuel with an octane rating that is too low may cause engine damage. All gasoline vehicles must be operated with unleaded gasoline. Therefore, avoid taking your vehicle to areas where appropriate fuel is not available.

When transferring the registration of your vehicle to another country, state, province or district, it may be necessary to modify the vehicle to meet local laws and regulations.

The laws and regulations for motor vehicle emission control and safety standards vary according to the country, state, province or district; therefore, vehicle specifications may differ.

When any vehicle is to be taken into another country, state, province or district and registered, its modifications, transportation and registration are the responsibility of the user. NISSAN is not responsible for any inconvenience that may result.

VEHICLE IDENTIFICATION

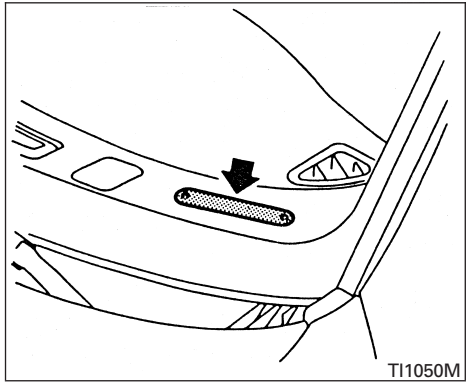

VEHICLE IDENTIFICATION NUMBER (VIN) PLATE

The vehicle identification number (VIN) plate is attached as shown. This number is the identification for your vehicle and is used in the vehicle registration.

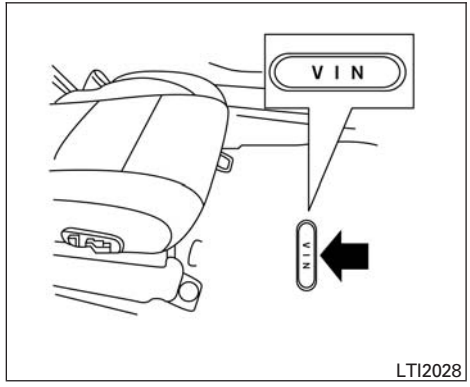

VEHICLE IDENTIFICATION NUMBER (chassis number)

The vehicle identification number is located as shown.

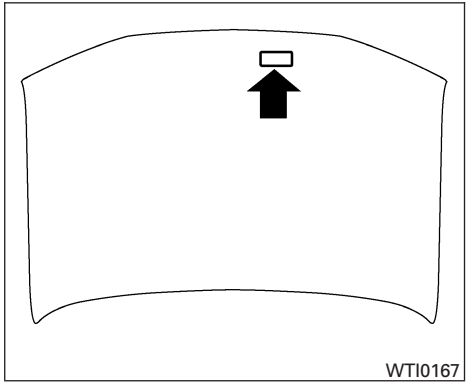

EMISSION CONTROL INFORMATION LABEL

The emission control information label is attached to the underside of the hood as shown.

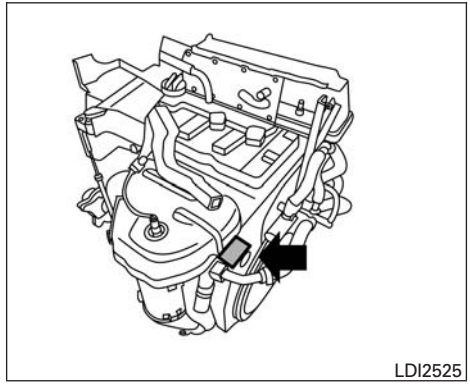

ENGINE SERIAL NUMBER

The number is stamped on the engine as shown.

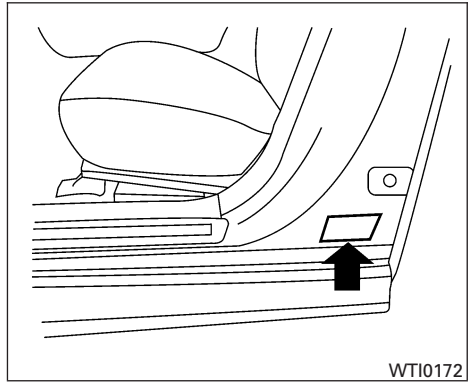

F.M.V.S.S./C.M.V.S.S. CERTIFICATION LABEL

The Federal/Canadian Motor Vehicle Safety Standard (F.M.V.S.S./C.M.V.S.S.) certification label is affixed as shown. This label contains valuable vehicle information, such as: (GVWR), (GAWR), month and year of manufacture, (VIN), etc. Review it carefully.

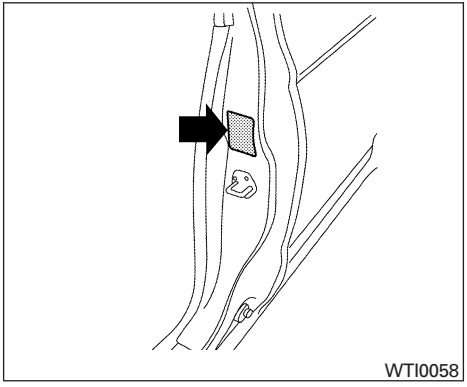

TIRE AND LOADING INFORMATION LABEL

The cold tire pressure is shown on the Tire and Loading Information label. The label is located as shown.

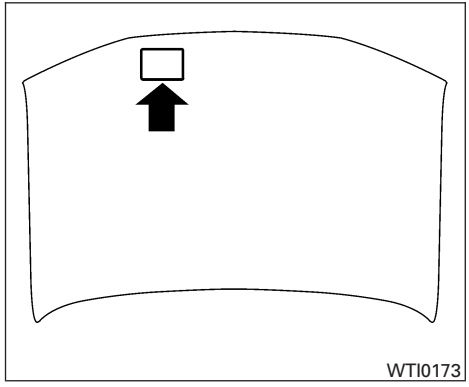

AIR CONDITIONER SPECIFICATION LABEL

The air conditioner specification label is affixed to the underside of the hood as shown.

To mount the license plate, attach the license plate bracket to the front plastic finisher at the location marks (small dimples) using the screws provided.

⚠WARNING

- **It is extremely dangerous to ride in a cargo area inside a vehicle. In a collision, people riding in these areas are more likely to be seriously injured or killed.**
- **Do not allow people to ride in any area of your vehicle that is not equipped with seats and seat belts.**
- **Be sure everyone in your vehicle is in a seat and using a seat belt properly.**

TERMS

It is important to familiarize yourself with the following terms before loading your vehicle:

- Curb Weight (actual weight of your vehicle) - vehicle weight including: standard and optional equipment, fluids, emergency tools, and spare tire assembly. This weight **does not** include passengers and cargo.
- GVW (Gross Vehicle Weight) - curb weight plus the combined weight of passengers and cargo.
- GVWR (Gross Vehicle Weight Rating) - maximum total combined weight of the unloaded vehicle, passengers, luggage, hitch, trailer tongue load and any other optional equipment. This information is located on the F.M.V.S.S./C.M.V.S.S. certification label.
- GAWR (Gross Axle Weight Rating) - maximum weight (load) limit specified for the front or rear axle. This information is located on the F.M.V.S.S./C.M.V.S.S. certification label.
- GCWR (Gross Combined Weight rating) - The maximum total weight rating of the vehicle, passengers, cargo, and trailer.
- Vehicle Capacity Weight, Load limit, Total load capacity - maximum total weight limit specified of the load (passengers and cargo) for the vehicle. This is the maximum combined weight of occupants and cargo that can be loaded into the vehicle. If the vehicle is used to tow a trailer, the trailer tongue weight must be included as part of the cargo load. This information is located on the Tire and Loading Information label.
- Cargo capacity - permissible weight of cargo, the subtracted weight of occupants from the load limit.

VEHICLE LOAD CAPACITY

Do not exceed the load limit of your vehicle shown as “The combined weight of occupants and cargo” on the Tire and Loading Information label. Do not exceed the number of occupants shown as “Seating Capacity” on the Tire and Loading Information label.

To get “the combined weight of occupants and cargo”, add the weight of all occupants, then add the total luggage weight. Examples are shown in the following illustration.

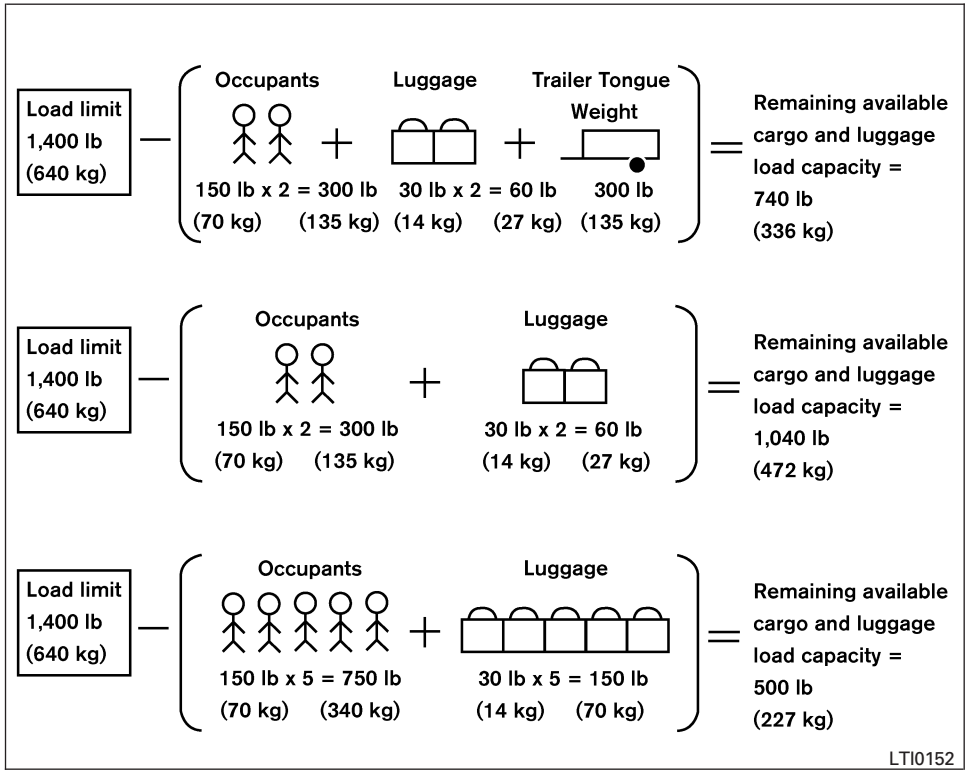

Example

Steps for determining correct load limit

1. Locate the statement “The combined weight of occupants and cargo should never exceed XXX lbs or XXX kg” on your vehicle’s placard.
2. Determine the combined weight of the driver and passengers that will be riding in your vehicle.
3. Subtract the combined weight of the driver and passengers from XXX lbs or XXX kg.
4. The resulting figure equals the available amount of cargo and luggage load capacity. For example, if the XXX amount equals 1,400 lbs. and there will be five 150 lb. passengers in your vehicle, the amount of available cargo and luggage load capacity is 650 lbs. (1,400-750 (5 X 150) = 650 lbs) or (640-340 (5 X 70) = 300 kg.)
5. Determine the combined weight of luggage and cargo being loaded on the vehicle. That weight may not safely exceed the available cargo and luggage load capacity calculated in Step 4.
6. If your vehicle will be towing a trailer, load from your trailer will be transferred to your vehicle. Consult this manual to determine how this reduces the available cargo and luggage load capacity of your vehicle.

Before driving a loaded vehicle, confirm that you do not exceed the Gross Vehicle Weight Rating (GVWR) or the Gross Axle Weight Rating (GAWR) for your vehicle. For additional information, refer to “Measurement of weights” in this section.

Also check tires for proper inflation pressures. For additional information, refer to the Tire and Loading Information label.

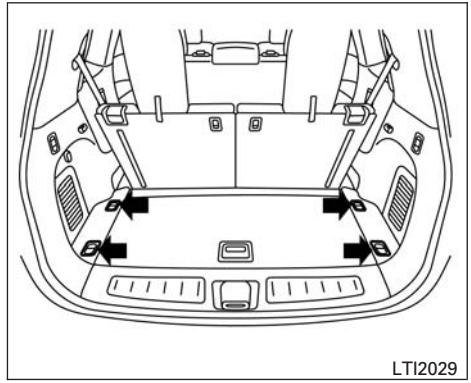

Cargo area luggage hooks

SECURING THE LOAD

There are luggage hooks located in the cargo area as shown. The hooks can be used to secure cargo with ropes or other types of straps.

Do not apply a total load of more than 6.5 lbs. (29 N) to a single metal floor hook when securing cargo.

⚠ WARNING

- **Properly secure all cargo with ropes or straps to help prevent it from sliding or shifting. Do not place cargo higher than the seatbacks. In a sudden stop or collision, unsecured cargo could cause personal injury.**
- **The child restraint top tether strap may be damaged by contact with items in the cargo area. Secure any items in the cargo area. Your child could be seriously injured or killed in a collision if the top tether strap is damaged.**
- **Do not load your vehicle any heavier than the GVWR or the maximum front and rear GAWRs. If you do, parts of your vehicle can break, tire damage could occur, or it can change the way your vehicle handles. This could result in loss of control and cause personal injury.**

LOADING TIPS

- The GVW must not exceed GVWR or GAWR as specified on the F.M.V.S.S./C.M.V.S.S. certification label.
- Do not load the front and rear axle to the GAWR. Doing so will exceed the GVWR.

⚠ WARNING

- **Properly secure all cargo with ropes or straps to help prevent it from sliding or shifting. Do not place cargo higher than the seatbacks. In a sudden stop or collision, unsecured cargo could cause personal injury.**
- **Do not load your vehicle any heavier than the GVWR or the maximum front and rear GAWRs. If you do, parts of your vehicle can break, tire damage could occur, or it can change the way your vehicle handles. This could result in loss of control and cause personal injury.**
- **Overloading not only can shorten the life of your vehicle and the tire, but can also cause unsafe vehicle handling and longer braking distances. This may cause a premature tire failure which could result in a serious accident and personal injury. Failures caused by overloading are not covered by the vehicle's warranty.**

MEASUREMENT OF WEIGHTS

Secure loose items to prevent weight shifts that could affect the balance of your vehicle. When the vehicle is loaded, drive to a scale and weigh the front and the rear wheels separately to determine axle loads. Individual axle loads should not exceed either of the gross axle weight ratings (GAWR). The total of the axle loads should not exceed the gross vehicle weight rating (GVWR). These ratings are given on the vehicle certification label. If weight ratings are exceeded, move or remove items to bring all weights below the ratings.

⚠ WARNING

Overloading or improper loading of a trailer and its cargo can adversely affect vehicle handling, braking and performance and may lead to accidents.

⚠ CAUTION

- **Do not tow a trailer or haul a heavy load for the first 500 (805 km). Your engine, axle or other parts could be damaged.**
- **For the first 500 miles (805 km) that you tow a trailer, do not drive over 50 mph (80 km/h) and do not make starts at full throttle. This helps the engine and other parts of your vehicle wear in at the heavier loads.**

Your new vehicle was designed to be used primarily to carry passengers and cargo. Remember that towing a trailer places additional loads on your vehicle's engine, drive train, steering, braking and other systems.

A NISSAN Towing Guide (U.S. only) is available on the website at *www.nissanusa.com.* This guide includes information on trailer towing capability and the special equipment required for proper towing.

MAXIMUM LOAD LIMITS

Maximum trailer loads

Never allow the total trailer load to exceed the value specified in the following Towing Load/Specification Chart found later in this section. The total trailer load equals trailer weight plus its cargo weight.

- **When towing a trailer load of 3,500 lbs. (1,587 kg) or more, trailers with a brake system MUST be used.**

The maximum Gross Combined Weight Rating (GCWR) should not exceed the value specified in the following Towing Load/Specification Chart.

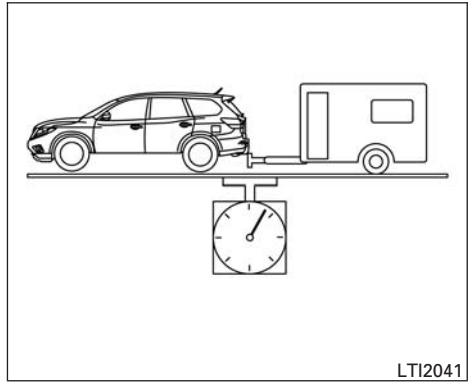

The GCWR equals the combined weight of the towing vehicle (including passengers and cargo) plus the total trailer load. Towing loads greater than these or using improper towing equipment could adversely affect vehicle handling, braking and performance.

The ability of your vehicle to tow a trailer is not only related to the maximum trailer loads, but also the places you plan to tow. Tow weights appropriate for level highway driving may have to be reduced for low traction situations (for example, on slippery boat ramps).

Temperature conditions can also affect towing. For example, towing a heavy trailer in high outside temperatures on graded roads can affect engine performance and cause overheating. The engine protection mode, which helps reduce the chance of engine damage, could activate and automatically decrease engine power. Vehicle speed may decrease under high load. Plan your trip carefully to account for trailer and vehicle load, weather and road conditions.

⚠ WARNING

Overheating can result in reduced engine power and vehicle speed. The reduced speed may be lower than other traffic, which could increase the chance of a collision. Be especially careful when driving. If the vehicle cannot maintain a safe driving speed, pull to the side of the road in a safe area. Allow the engine to cool and return to normal operation. For additional information, refer to "If your vehicle overheats" in the "In case of emergency" section of this manual.

⚠ CAUTION

Vehicle damage resulting from improper towing procedures is not covered by NISSAN warranties.

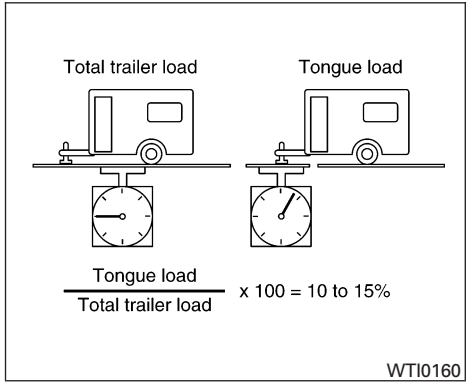

Tongue load

When using a weight carrying or a weight distributing hitch, keep the tongue load between 10 - 15% of the total trailer load or use the trailer tongue load specified by the trailer manufacturer. The tongue load must be within the maximum tongue load limits shown in the following "Towing Load/Specification" chart. If the tongue load becomes excessive, rearrange cargo to allow for proper tongue load.

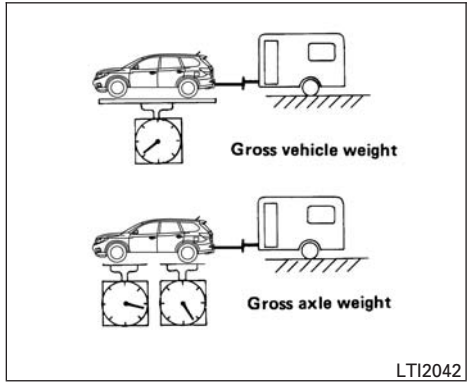

Maximum Gross Vehicle Weight (GVW)/maximum Gross Axle Weight (GAW)

The GVW of the towing vehicle must not exceed the Gross Vehicle Weight Rating (GVWR) shown on the F.M.V.S.S./C.M.V.S.S. certification label. The GVW equals the combined weight of the unloaded vehicle, passengers, luggage, hitch, trailer tongue load and any other optional equipment. In addition, front or rear GAW must not exceed the Gross Axle Weight Rating (GAWR) shown on the F.M.V.S.S./C.M.V.S.S. certification label.

Towing capacities are calculated assuming a base vehicle with driver and any options required to achieve the rating. Additional passengers, cargo and/or optional equipment, such as the trailer hitch, will add weight to the vehicle and reduce your vehicle's maximum towing capacity and trailer tongue load.

The vehicle and trailer need to be weighed to confirm the vehicle is within the GVWR, Front GAWR, Rear GAWR, Gross Combined Weight Rating (GCWR) and Towing capacity.

All vehicle and trailer weights can be measured using platform type scales commonly found at truck stops, highway weigh stations, building supply centers or salvage yards.

To determine the available payload capacity for tongue/king pin load, use the following procedure.

1. Locate the GVWR on the F.M.V.S.S./C.M.V.S.S. certification label.
2. Weigh your vehicle on the scale with all of the passengers and cargo that are normally in the vehicle when towing a trailer.
3. Subtract the actual vehicle weight from the GVWR. The remaining amount is the available maximum tongue/king pin load.

To determine the available towing capacity, use the following procedure.

1. Find the GCWR for your vehicle on the "Towing Load/Specification" chart found in this section.
2. Subtract the actual vehicle weight from the GCWR. The remaining amount is the available maximum towing capacity.

To determine the Gross Trailer Weight, weigh your trailer on a scale with all equipment and cargo, that are normally in the trailer when it is towed. Make sure the Gross trailer weight is not more than the Gross Trailer Weight Rating shown on the trailer and is not more than the calculated available maximum towing capacity.

Also weigh the front and rear axles on the scale to make sure the Front Gross Axle Weight and Rear Gross Axle Weight are not more than Front Gross Axle Weight and Rear Gross Axle Weight on the F.M.V.S.S./C.M.V.S.S. certification label. The cargo in the trailer and vehicle may need to be moved or removed to meet the specified ratings.

Example:

- Gross Vehicle Weight (GVW) as weighed on a scale - including passengers, cargo and hitch - 6,350 lb. (2,880 kg).
- Gross Vehicle Weight Rating (GVWR) from F.M.V.S.S./C.M.V.S.S. certification label - 7,250 lb. (3,289 kg).
- Gross Combined Weight Rating (GCWR) from "Towing Load/Specification" chart - 15,100 lb. (6,849 kg).
- Maximum Trailer towing capacity from "Towing Load/Specification" chart - 9,100 lb. (4,128 kg).

7,250 lb. (3,289 kg)	GVWR
– 6,350 lb. (2,880 kg)	GVW
= 900 lb. (409 kg)	Available for tongue weight
15,100 lb. (6,849 kg)	GCWR
– 6,350 lb. (2,880 kg)	GVW
= 9,123 lb. (4,138 kg)	Capacity available for towing
900 lb. (409 kg)	Available tongue weight
/ 8,750 lb. (3,969 kg)	Available capacity
=	10% tongue weight

The available towing capacity may be less than the maximum towing capacity due to the passenger and cargo load in the vehicle.

Remember to keep trailer tongue weight between 10 - 15% of the trailer weight or within the trailer tongue load specification recommended by the trailer manufacturer. If the tongue load becomes excessive, rearrange the cargo to obtain the proper tongue load. Do not exceed the maximum tongue weight specification shown in the “Towing load/specification” chart even if the calculated available tongue weight is greater than 15%. If the calculated tongue weight is less than 10%, reduce the total trailer weight to match the available tongue weight.

Always verify that available capacities are within the required ratings.

TOWING LOAD/SPECIFICATION

TOWING LOAD/SPECIFICATION CHART	
	U.S. and Canada
Maximum Towing Capacity*1	3,500 lb. (1,587 kg)
Maximum Tongue Load	350 lb. (158 kg)
Maximum Gross Combined Weight Rating	8,800 lb. (3,991 kg)
*1: The towing capacity values are calculated assuming a base vehicle with driver and any options required to achieve the rating. Additional passengers, cargo and/or optional equipment will add weight to the vehicle and reduce your vehicle’s maximum towing capacity.	

TOWING SAFETY

Trailer hitch

Your vehicle may be equipped with an optional trailer tow package. The trailer tow package includes a receiver-type frame mounted hitch. This hitch is rated for the maximum towing capacity of this vehicle when the proper towing equipment is used. Choose a proper ball mount and hitch ball that is rated for the trailer to be towed. Genuine NISSAN ball mounts and hitch balls are available from your NISSAN dealer.

If your vehicle is not equipped with the optional trailer tow package, check the towing capacity of your bumper hitch or receiver-type frame mounted hitch. Choose a proper hitch for your vehicle and trailer. A genuine NISSAN trailer hitch is available from your NISSAN dealer . Make sure the trailer hitch is securely attached to the vehicle to help avoid personal injury or property damage due to sway caused by crosswinds, rough road surfaces or passing trucks.

⚠ WARNING

Trailer hitch components have specific weight ratings. Your vehicle may be capable of towing a trailer heavier than the weight rating of the hitch components. Never exceed the weight rating of the hitch components. Doing so can cause serious personal injury or property damage.

Hitch ball

Choose a hitch ball of the proper size and weight rating for your trailer:

- The required hitch ball size is stamped on most trailer couplers. Most hitch balls also have the size printed on the top of the ball.
- Choose the proper class hitch ball based on the trailer weight.
- The diameter of the threaded shank of the hitch ball must be matched to the ball mount hole diameter. The hitch ball shank should be no more than 1/16” smaller than the hole in the ball mount.
- The threaded shank of the hitch ball must be long enough to be properly secured to the ball mount. There should be at least 2 threads showing beyond the lock washer and nut.

Ball mount

The hitch ball is attached to the ball mount and the ball mount is inserted into the hitch receiver. Choose a proper class ball mount based on the trailer weight. Additionally, the ball mount should be chosen to keep the trailer tongue level with the ground.

Weight carrying hitches

A weight carrying or “dead weight” ball mount is one that is designed to carry the whole amount of tongue weight and gross weight directly on the ball mount and on the receiver.

Weight distribution hitch

This type of hitch is also called a “load-leveling” or “equalizing” hitch. A set of bars attach to the ball mount and to the trailer to distribute the tongue weight (hitch weight) of your trailer. Many vehicles can’t carry the full tongue weight of a given trailer, and need some of the tongue weight transferred through the frame and pushing down on the front wheels. This gives stability to the tow vehicle.

A weight-distributing hitch system (Class IV) is recommended if you plan to tow trailers with a maximum weight over 5,000 lbs (2,268 kg). Check with the trailer and towing equipment manufacturers to determine if they recommend the use of a weight-distributing hitch system.

NOTE:

A weight-distributing hitch system may affect the operation of trailer surge brakes. If you are considering use of a weight-distributing hitch system with a surge brake-equipped trailer, check with the surge brake, hitch or trailer manufacturer to determine if and how this can be done.

Follow the instructions provided by the manufacturer for installing and using the weight-distributing hitch system.

General set-up instructions are as follows:

1. Park unloaded vehicle on a level surface. With the ignition on and the doors closed, allow the vehicle to stand for several minutes so that it can level.
2. Measure the height of a reference point on the front and rear bumpers at the center of the vehicle.
3. Attach the trailer to the vehicle and adjust the hitch equalizers so that the front bumper height is within 0 - .5 inches (0 – 13 mm) of the reference height measured in step 2. The rear bumper should be no higher than the reference height measured in step 2.

⚠ WARNING

Properly adjust the weight distributing hitch so the rear of the bumper is no higher than the measured reference height when the trailer is attached. If the rear bumper is higher than the measured reference height when loaded, the vehicle may handle unpredictably which could cause a loss of vehicle control and cause serious personal injury or property damage.

Sway control device

Sudden maneuvers, wind gusts, and buffeting caused by other vehicles can affect trailer handling. Sway control devices may be used to help control these affects. If you choose to use one, contact a reputable trailer hitch supplier to make sure the sway control device will work with the vehicle, hitch, trailer and the trailer's brake system. Follow the instructions provided by the manufacturer for installing and using the sway control device.

Class I hitch

Class I trailer hitch equipment (receiver, ball mount and hitch ball) can be used to tow trailers of a maximum weight of 2,000 lb (907 kg).

Class II hitch

Class II trailer hitch equipment (receiver, ball mount and hitch ball) can be used to tow trailers of a maximum weight of 3,500 lb (1,587 kg).

Class III hitch

Class III trailer hitch equipment (receiver, ball mount and hitch ball) can be used to tow trailers of a maximum weight of 5,000 lb (2,268 kg).

Tire pressures

- When towing a trailer, inflate the vehicle tires to the recommended cold tire pressure indicated on the tire placard.
- Trailer tire condition, size, load rating and proper inflation pressure should be in accordance with the trailer and tire manufacturer's specifications.

Safety chains

Always use suitable safety chains between your vehicle and the trailer. The safety chains should be crossed and should be attached to the hitch, not to the vehicle bumper or axle. The safety chains can be attached to the bumper if the hitch ball is mounted to the bumper. Be sure to leave enough slack in the chains to permit turning corners.

Trailer lights

⚠CAUTION

When splicing into the vehicle electrical system, a commercially available power-type module/converter must be used to provide power for all trailer lighting. This unit uses the vehicle battery as a direct power source for all trailer lights while using the vehicle tail light, stoplight and turn signal circuits as a signal source. The module/converter must draw no more that 15 milliamps from the stop and tail lamp circuits. Using a module/converter that exceeds these power requirements may damage the vehicle's electrical system. See a reputable trailer retailer to obtain the proper equipment and to have it installed.

Trailer lights should comply with federal and/or local regulations. For assistance in hooking up trailer lights, contact a NISSAN dealer or reputable trailer retailer. Vehicles equipped with the optional trailer tow package are equipped with a 7-pin trailer harness connector. If your trailer is equipped with a flat 4-pin connector, an adapter will be needed to connect the trailer lights to the vehicle. Adapters are available at auto parts stores and hitch retailers.

Trailer brakes

When towing a trailer load of 3,500 lbs. (1,587 kg) or more, trailers with a brake system MUST be used. However, most states require a separate braking system on trailers with a loaded weight above a specific amount. Make sure the trailer meets the local regulations and the regulations where you plan to tow.

Several types of braking systems are available.

Surge Brakes - The surge brake actuator is mounted on the trailer tongue with a hydraulic line running to each trailer wheel. Surge brakes are activated by the trailer pushing against the hitch ball when the tow vehicle is braking. Hydraulic surge brakes are common on rental trailers and some boat trailers. In this type of system, there is no hydraulic or electric connection for brake operation between the tow vehicle and the trailer.

Electric Trailer Brakes - Electric braking systems are activated by an electronic signal sent from a trailer brake controller (special brake-sensing module). If electric trailer brakes are used, refer to "Electric trailer brake controller" in this section.

Have a professional supplier of towing equipment make sure the trailer brakes are properly installed and demonstrate proper brake function testing.

⚠WARNING

Never connect a trailer brake system directly to the vehicle brake system.

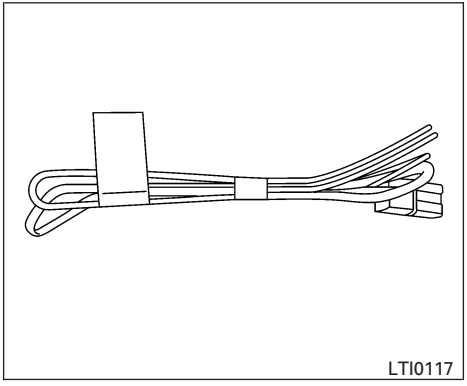

Jumper Harness

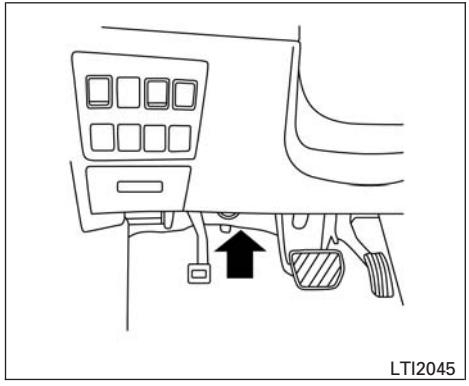

Connector Location

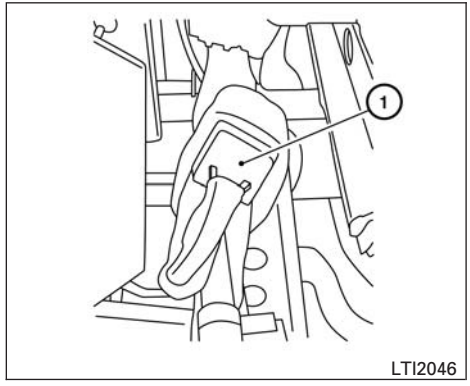

Connector

Electric trailer brake controller

Trailers equipped with electric brakes may require the installation of an aftermarket trailer brake controller.

Your vehicle is equipped with a connector and jumper harness that is specifically designed to be used when installing an aftermarket brake controller.

To install the electric trailer brake controller jumper harness, perform the following procedure:

1. Open the driver door. Move the seat to the rearmost position.
2. Locate the jumper harness connector under the lower portion of the instrument panel. The connector is taped to the wiring harness ① as indicated.

- The connector is marked with a white tag with “elec brake conn”.

Wire color designation for electric trailer brake controller jumper harness.

WIRE COLOR	NOTE
RED/GREEN	Vehicle stop lamp switch to trailer brake controller.
BLACK	Brake controller ground (-).
BROWN/WHITE	Trailer brake controller switched output.
RED/BLUE	Not used
RED	Fused trailer brake controller battery feed (B+).

3. Peel off the tape and connect the jumper harness to the connector .
4. Release the parking brake.
5. Install the aftermarket electric trailer brake controller according to the manufacturer's instructions.

Pre-towing tips

- Be certain your vehicle maintains a level position when a loaded and/or unloaded trailer is hitched. Do not drive the vehicle if it has an abnormal nose-up or nose-down condition; check for improper tongue load, overload, worn suspension or other possible causes of either condition.
- Always secure items in the trailer to prevent load shift while driving.
- Keep the cargo load as low as possible in the trailer to keep the trailer center of gravity low.
- Load the trailer so approximately 60% of the trailer load is in the front half and 40% is in the back half. Also make sure the load is balanced side to side.
- Check your hitch, trailer tire pressure, vehicle tire pressure, trailer light operation, and trailer wheel lug nuts every time you attach a trailer to the vehicle.
- Be certain your rearview mirrors conform to all federal, state or local regulations. If not, install any mirrors required for towing before driving the vehicle.
- Determine the overall height of the vehicle and trailer so the required clearance is known.

Trailer towing tips

In order to gain skill and an understanding of the vehicle's behavior, you should practice turning, stopping and backing up in an area which is free from traffic. Steering stability and braking performance will be somewhat different than under normal driving conditions.

- Always secure items in the trailer to prevent load shift while driving.
- Lock the trailer hitch coupler with a pin or lock to prevent the coupler from inadvertently becoming unlatched.
- Avoid abrupt starts, acceleration or stops.
- Avoid sharp turns or lane changes.
- Always drive your vehicle at a moderate speed.
- When backing up, hold the bottom of the steering wheel with one hand. Move your hand in the direction in which you want the trailer to go. Make small corrections and back up slowly. If possible, have someone guide you when you are backing up.

Always block the wheels on both vehicle and trailer when parking. Parking on a slope is not recommended; however, if you must do so:

⚠ CAUTION

If you move the shift lever to the P (Park) position before blocking the wheels and applying the parking brake, transmission damage could occur.

1. Apply and hold the brake pedal.
2. Have someone place blocks on the downhill side of the vehicle and trailer wheels.
3. After the wheel blocks are in place, slowly release the brake pedal until the blocks absorb the vehicle load.
4. Apply the parking brake.
5. Shift the transmission into P (Park).
6. Turn off the engine.

To drive away:

1. Start the vehicle.
2. Apply and hold the brake pedal.
3. Shift the transmission into gear.
4. Release the parking brake.
5. Drive slowly until the vehicle and trailer are clear from the blocks.
6. Apply and hold the brake pedal.
7. Have someone retrieve and store the blocks.

- While going downhill, the weight of the trailer pushing on the tow vehicle may decrease overall stability. Therefore, to maintain adequate control, reduce your speed and shift to a lower gear. Avoid long or repeated use of the brakes when descending a hill, as this reduces their effectiveness and could cause overheating. Shifting to a lower gear instead provides “engine braking” and reduces the need to brake as frequently.
- If the engine coolant temperature rises to a high temperature, refer to “If your vehicle overheats” in the “In case of emergency” section of this owner’s manual.
- Trailer towing requires more fuel than normal circumstances.
- Avoid towing a trailer for your vehicle’s first 500 miles (805 km).
- For the first 500 miles (805 km) that you do tow, do not drive over 50 MPH (80 km/h).
- Have your vehicle serviced more often than at intervals specified in the recommended Maintenance Schedule in the “NISSAN Service and Maintenance Guide”.
- When making a turn, your trailer wheels will be closer to the inside of the turn than your vehicle wheels. To compensate for this, make a larger than normal turning radius during the turn.
- Crosswinds and rough roads will adversely affect vehicle/trailer handling, possibly causing vehicle sway. When being passed by larger vehicles, be prepared for possible changes in crosswinds that could affect vehicle handling.

Do the following if the trailer begins to sway:

1. Take your foot off the accelerator pedal to allow the vehicle to coast and steer as straight ahead as the road conditions allow. This combination will help stabilize the vehicle
   – Do not correct trailer sway by steering or applying the brakes.
2. When the trailer sway stops, gently apply the brakes and pull to the side of the road in a safe area.
3. Try to rearrange the trailer load so it is balanced as described earlier in this section.

- Be careful when passing other vehicles. Passing while towing a trailer requires considerably more distance than normal passing. Remember, the length of the trailer must also pass the other vehicle before you can safely change lanes.
- Use the Tow Mode or downshift the transmission to a lower gear for engine braking when driving down steep or long hills. This will help slow the vehicle without applying the brakes.
- Avoid holding the brake pedal down too long or too frequently. This could cause the brakes to overheat, resulting in reduced braking efficiency.
- Increase your following distance to allow for greater stopping distances while towing a trailer. Anticipate stops and brake gradually.
- NISSAN recommends that the cruise control not be used while towing a trailer.
- Some states or provinces have specific regulations and speed limits for vehicles that are towing trailers. Obey the local speed limits.
- Check your hitch, trailer wiring harness connections, and trailer wheel lug nuts after 50 miles (80 km) of travel and at every break.
- When launching a boat, don't allow the water level to go over the exhaust tail pipe or rear bumper.
- Make sure you disconnect the trailer lights before backing the trailer into the water or the trailer lights may burn out.

When towing a trailer, final drive gear oil should be replaced and transmission oil/fluid should be changed more frequently. For additional information, refer to the "Maintenance and do-it-yourself" section in this manual.

Tow mode

Using tow mode is recommended when pulling a heavy trailer or hauling a heavy load. Press the TOW MODE switch to activate tow mode. The indicator light on the TOW MODE switch illuminates when tow mode is selected. Press the TOW MODE switch again to turn tow mode off. Tow mode is automatically cancelled when the ignition switch is turned OFF.

Tow mode includes the following features:

- Grade logic — Adjusts transmission shifts when pulling a trailer or hauling a load up a grade.
- Downhill Speed Control (DSC) — automatically downshifts when driving down a grade with a trailer or heavy load to help control vehicle speed.

Driving the vehicle in the tow mode with no trailer/load or light trailer/light load will not cause any damage. However, fuel economy may be reduced and the transmission/engine driving characteristics may feel unusual.

When towing a trailer, final drive gear oil should be replaced and transmission oil/fluid should be changed more frequently. For additional information, refer to the "Maintenance and do-it-yourself" section in this manual.

FLAT TOWING

Towing your vehicle with all four wheels on the ground is sometimes called flat towing. This method is sometimes used when towing a vehicle behind a recreational vehicle, such as a motor home.

⚠ CAUTION

- **Failure to follow these guidelines can result in severe transmission damage.**
- **Whenever flat towing your vehicle, always tow forward, never backward.**
- **DO NOT tow any continuously variable transmission vehicle with all four wheels on the ground (flat towing). Doing so WILL DAMAGE internal transmission parts due to lack of transmission lubrication.**
- **For emergency towing procedures refer to "Towing recommended by NISSAN" in the "In case of emergency" section of this manual.**

Continuously Variable Transmission

To tow a vehicle equipped with a continuously variable transmission, an appropriate vehicle dolly **MUST** be placed under the towed vehicle's drive wheels. **Always** follow the dolly manufacturer's recommendations when using their product.

DOT (Department of Transportation) Quality Grades: All passenger car tires must conform to federal safety requirements in addition to these grades.

Quality grades can be found where applicable on the tire sidewall between tread shoulder and maximum section width. For example:

Treadwear 200 Traction AA Temperature A

Treadwear

The treadwear grade is a comparative rating based on the wear rate of the tire when tested under controlled conditions on a specified government test course. For example, a tire graded 150 would wear one and one-half (1 1/2) times as well on the government course as a tire graded 100. The relative performance of tires depends upon the actual conditions of their use, however, and may depart significantly from the norm due to variations in driving habits, service practices and differences in road characteristics and climate.

Traction AA, A, B and C

The traction grades, from highest to lowest, are AA, A, B, and C. Those grades represent the tire's ability to stop on wet pavement as measured under controlled conditions on specified government test surfaces of asphalt and concrete. A tire marked C may have poor traction performance.

⚠ WARNING

The traction grade assigned to this tire is based on straight-ahead braking traction tests, and does not include acceleration, cornering, hydroplaning, or peak traction characteristics.

Temperature A, B and C

The temperature grades are A (the highest), B, and C, representing the tire's resistance to the generation of heat, and its ability to dissipate heat when tested under controlled conditions on a specified indoor laboratory test wheel. Sustained high temperature can cause the material of the tire to degenerate and reduce tire life, and excessive temperature can lead to sudden tire failure. The grade C corresponds to a level of performance which all passenger car tires must meet under the Federal Motor Safety Standard No. 109. Grades B and A represent higher levels of performance on the laboratory test wheel than the minimum required by law.

⚠ WARNING

The temperature grade for this tire is established for a tire that is properly inflated and not overloaded. Excessive speed, underinflation, or excessive loading, either separately or in combination, can cause heat build-up and possible tire failure.

EMISSION CONTROL SYSTEM WARRANTY

Your NISSAN vehicle is covered by the following emission warranties:

For USA

1. Emission Defects Warranty
2. Emissions Performance Warranty

Details of this warranty may be found with other vehicle warranties in your Warranty Information Booklet which comes with your NISSAN vehicle. If you did not receive a Warranty Information Booklet, or it is lost, you may obtain a replacement by writing to:

- Nissan North America, Inc.
  Consumer Affairs Department
  P.O. Box 685003
  Franklin, TN 37068-5003

For Canada

Emission Control System Warranty

Details of this warranty may be found with other vehicle warranties in your Warranty Information Booklet which comes with your NISSAN vehicle. If you did not receive a Warranty Information Booklet, or it is lost, you may obtain a replacement by writing to:

- Nissan Canada Inc.
  5290 Orbitor Drive
  Mississauga, Ontario, L4W 4Z5

REPORTING SAFETY DEFECTS

For USA

If you believe that your vehicle has a defect which could cause a crash or could cause injury or death, you should immediately inform the National Highway Traffic Safety Administration (NHTSA) in addition to notifying NISSAN.

If NHTSA receives similar complaints, it may open an investigation, and if it finds that a safety defect exists in a group of vehicles, it may order a recall and remedy campaign. However, NHTSA cannot become involved in individual problems between you, your dealer, or NISSAN.

To contact NHTSA, you may call the Vehicle Safety Hotline toll-free at 1-888-327-4236 (TTY: 1-800-424-9153); go to http://www.safercar.gov; or write to: Administrator, NHTSA, 400 Seventh Street, SW., Washington, D.C. 20590. You can also obtain other information about motor vehicle safety from http://www.safercar.gov.

You may notify NISSAN by contacting our Consumer Affairs Department, toll-free, at 1-800-NISSAN-1.

For Canada

If you believe that your vehicle has a defect which could cause a crash or could cause injury or death, you should immediately inform Transport Canada in addition to notifying NISSAN.

If Transport Canada receives complaints, it may open an investigation, and if it finds that a safety defect exists in a group of vehicles, it may request that NISSAN conduct a recall campaign. However, Transport Canada cannot become involved in individual problems between you, your dealer, or NISSAN.

You may contact Transport Canada's Defect Investigations and Recalls Division toll free at 1-800-333-0510. You may also report safety defects online at: https://wwwapps.tc.gc.ca/Saf-Sec-Sur/7/PCDB-BDPP/fc-cp.aspx?lang=eng (English speakers) or

https://wwwapps.tc.gc.ca/Saf-Sec-Sur/7/PCDB-BDPP/fc-cp.aspx?lang=fra (French speakers)

Additional information concerning motor vehicle safety may be obtained from Transport Canada's Road Safety Information Centre at 1-800-333-0371 or online at www.tc.gc.ca/roadsafety (English speakers) or www.tc.gc.ca/securiteroutiere (French speakers).

To notify NISSAN of any safety concerns please contact our Consumer Information Centre toll free at 1-800-387-0122.

READINESS FOR INSPECTION/ MAINTENANCE (I/M) TEST

⚠ WARNING

A vehicle equipped with Four-Wheel Drive (4WD) should never be tested using a two wheel dynamometer (such as the dynamometers used by some states for emissions testing), or similar equipment. Make sure you inform the test facility personnel that your vehicle is equipped with 4WD before it is placed on a dynamometer. Using the wrong test equipment may result in transmission damage or unexpected vehicle movement which could result in serious vehicle damage or personal injury.

Due to legal requirements in some states and Canadian Provinces, your vehicle may be required to be in what is called the "ready condition" for an Inspection/Maintenance (I/M) test of the emission control system.

The vehicle is set to the "ready condition" when it is driven through certain driving patterns. Usually, the ready condition can be obtained by ordinary usage of the vehicle.

If a powertrain system component is repaired or the battery is disconnected, the vehicle may be reset to a "not ready" condition. Before taking the I/M test, check the vehicle's inspection/maintenance test readiness condition. Place the ignition switch in the ON position without starting the engine. If the Malfunction Indicator Light (MIL) comes on steady for 20 seconds and then blinks for 10 seconds , the I/M test condition is "not ready". If the MIL does not blink after 20 seconds, the I/M test condition is "ready". Contact a NISSAN dealer to set the "ready condition" or to prepare the vehicle for testing.

EVENT DATA RECORDERS (EDR) (if so equipped)

This vehicle is equipped with an EDR. The main purpose of an EDR is to record, in certain collision or near collision-like situations, such as an air bag deployment or hitting a road obstacle, data that will assist in understanding how a vehicle's systems performed. The EDR is designed to record data related to vehicle dynamics and safety systems for a short period of time, typically 30 seconds or less. The EDR in this vehicle is designed to record such data as:

- How various systems in your vehicle were operating;
- Whether or not the driver and passenger safety belts were buckled/fastened;
- How far (if at all) the driver was depressing the accelerator and/or brake pedal; and,
- How fast the vehicle was traveling.
- Sounds are not recorded.

These data can help provide a better understanding of the circumstances in which collisions and injuries occur. NOTE: EDR data are recorded by your vehicle only if a nontrivial collision situation occurs; no data are recorded by the EDR under normal driving conditions and no personal data (e.g. name, gender, age and collision location) are recorded. However, other parties, such as law enforcement, could combine the EDR data with the type of personally identifying data routinely acquired during a collision investigation.

To read data recorded by an EDR, special equipment is required and access to the vehicle or the EDR is needed. In addition to the vehicle manufacturer and NISSAN dealer, other parties, such as law enforcement, that have the special equipment, can read the information if they have access to the vehicle or the EDR. EDR data will only be accessed with the consent of the vehicle owner or lessee or as otherwise required or permitted by law.

OWNER'S MANUAL/SERVICE MANUAL ORDER INFORMATION

Genuine NISSAN Service Manuals for this model year and prior can be purchased. A genuine NISSAN Service Manual is the best source of service and repair information for your vehicle. This manual is the same one used by the factory-trained technicians working at NISSAN dealerships. Genuine NISSAN Owner's Manuals can also be purchased.

For USA

For current pricing and availability of genuine **NISSAN Service Manuals**, contact:

1-800-450-9491
www.nissan-techinfo.com

For current pricing and availability of genuine **NISSAN Owner's Manuals**, contact:

1-800-247-5321

For Canada

To purchase a copy of a genuine NISSAN Service Manual or Owner's Manual, for this model year and prior, please contact your nearest NISSAN dealer. For the phone number and location of a NISSAN dealer in your area, call the NISSAN Information Center at 1-800-387-0122 and a bilingual NISSAN representative will assist you.

MEMO

10 Index

2nd row bench seat adjustment 1-6, 1-8

A

Air bag (See supplemental restraint system) 1-47
Air bag system
Front (See supplemental front impact air bag system) 1-54
Air bag warning labels 1-64
Air bag warning light. 1-65, 2-15
Air bag warning light, supplemental . .1-65, 2-15
Air cleaner housing filter 8-19
Air conditioner
Air conditioner service 4-47
Air conditioner specification label 9-12
Air conditioner system refrigerant and oil recommendations. 9-7
Heater and air conditioner controls 4-43
Servicing air conditioner 4-47
Alarm system
(See vehicle security system) 2-31
Anchor point locations 1-30
Antenna 4-95
Anti-lock brake warning light. 2-10
Anti-lock Braking System (ABS). 5-41
Armrests 1-9
Around View™ Monitor 4-28
Audible reminders 2-18
Audio system 4-47
Bluetooth® audio. 4-90
Compact disc (CD) player 4-67, 4-74
Audio System
Digital Versatile Disc (DVD) Player Operation 4-76
Audio system
FM/AM/SAT radio with CD/DVD player. .4-70
FM/AM/SAT radio with compact disc (CD) player 4-63
Audio System
iPod® Player. 4-84, 4-86
iPod® player operation 4-84, 4-86
Audio system
Radio 4-47
Steering wheel audio control switch . . .4-94
USB interface 4-79, 4-80
Autolight switch. 2-37
Automatic
Automatic drive positioner 3-36
Automatic power window switch 2-57
Automatic anti-glare inside mirror 3-33
Automatic door locks 3-6
Automatic drive positioner 3-36

B

Battery. 8-16
Charge warning light 2-11
Battery replacement
Key fob 8-24
Before starting the engine 5-13
Belt (See drive belt) 8-17
Block heater
Engine 5-49
Bluetooth® audio. 4-90
Bluetooth® hands-free phone system. 4-109, 4-124
Booster seats 1-44
Brake
Anti-lock Braking System (ABS). 5-41
Brake fluid. 8-14
Brake light (See stop light). 8-27
Brake system 5-40
Brake wear indicators 2-18, 8-21
Parking brake operation 5-18
Self-adjusting brakes. 8-21
Brake fluid. 8-14
Brakes. 8-21
Brake system 5-40
Break-in schedule 5-33
Brightness/contrast button 4-9, 4-18
Brightness control
Instrument panel 2-39
Bulb check/instrument panel. 2-10
Bulb replacement. 8-27

C

Capacities and recommended fuel/lubricants. 9-2
Cargo light 2-62
Cargo (See vehicle loading information) . . .9-13
Car phone or CB radio 4-108
CD care and cleaning 4-93
CD player (See audio system) 4-67, 4-74
Check tire pressure. 2-30

Child restraints 1-23, 1-24, 1-25, 1-27
LATCH (Lower Anchors and Tethers for CHildren) System 1-27
Precautions on child restraints. 1-25, 1-32, 1-39, 1-44
Top tether strap anchor point locations . .1-30
Child restraint with top tether strap. 1-29
Child safety rear door lock 3-7
Chimes, audible reminders 2-18
Cleaning exterior and interior 7-2
Clock set/adjustment 4-8, 4-16
C.M.V.S.S. certification label 9-11
Cold weather driving. 5-48
Compact disc (CD) player 4-67, 4-74
Console box 2-49
Continuously Variable Transmission (CVT). . .5-15
Continuously Variable Transmission (CVT) fluid 8-13
Driving with Continuously Variable Transmission (CVT) 5-15
Control panel buttons 4-10
Brightness/contrast button 4-9, 4-18
Enter button. 4-4, 4-10
Without navigation system 4-4
Controls
Audio controls (steering wheel). 4-94
Heater and air conditioner controls. 4-43
Coolant
Capacities and recommended fuel/lubricants 9-2
Changing engine coolant 8-8
Checking engine coolant level 8-8
Checking inverter coolant level 8-10
Corrosion protection 7-7
Cruise control 5-31
Cup holders 2-51

D

Daytime running light system (Canada only). .2-39
Defroster switch
Rear window and outside mirror defroster switch. 2-36
Digital Versatile Disc (DVD) player 4-76
Dimensions and weights 9-9
Dimmer switch for instrument panel 2-39
Display controls (see control panel buttons) . .4-4, 4-10
Door locks 3-5
Drive belt 8-17
Drive positioner, Automatic 3-36
Driving
Cold weather driving. 5-48
Driving with Continuously Variable Transmission (CVT) 5-15
Precautions when starting and driving 5-2
Dual head restraint DVD system 4-96

E

Economy - fuel 5-35
Emission control information label 9-11
Emission control system warranty 9-29
Engine
Before starting the engine. 5-13
Block heater 5-49
Capacities and recommended fuel/lubricants 9-2
Changing engine coolant 8-8
Changing engine oil 8-11
Changing engine oil filter 8-13
Checking engine coolant level 8-8
Checking engine oil level 8-10
Engine compartment check locations 8-6
Engine cooling system 8-7
Engine oil. 8-10
Engine oil and oil filter recommendation . . .9-6
Engine oil pressure warning light 2-12
Engine oil viscosity 9-6
Engine serial number 9-11
Engine specifications 9-8
Starting the engine 5-14
Enter button. 4-4, 4-10
Event data recorders 9-31
Exhaust gas (Carbon monoxide) 5-2
Extended storage switch 8-23

F

Flashers (See hazard warning flasher switch). .6-2
Flat tire 6-3
Floor mat positioning aid 7-6
Fluid
Brake fluid 8-14
Capacities and recommended fuel/lubricants 9-2
Continuously Variable Transmission (CVT) fluid 8-13
Engine coolant. 8-7
Engine oil. 8-10
Inverter coolant 8-9
Power steering fluid 8-14
Windshield-washer fluid. 8-15
F.M.V.S.S. certification label. 9-11
Fog light switch 2-40

Front air bag system
(See supplemental restraint system) 1-54
Front power seat adjustment 1-4
Front seats 1-2
Fuel
Capacities and recommended fuel/lubricants 9-2
Fuel economy 5-35
Fuel-filler door and cap 3-28
Fuel gauge 2-5
Fuel octane rating 9-5
Loose fuel cap warning. 2-30, 3-29
Fuel gauge 2-5
Fuses 8-22
Fusible links 8-22

G

Garage door opener, HomeLink® Universal Transceiver 2-63
Gas cap 3-28
Gauge
Fuel gauge 2-5
Odometer 2-4
Power meter 2-6
Speedometer 2-4
Tachometer 2-5
Trip odometer 2-4
General maintenance 8-2
Glove box. 2-49
Glove box lock 2-49

H

Hands-free phone system, Bluetooth®. 4-109, 4-124
Hazard warning flasher switch 6-2
Headlight and turn signal switch 2-36
Headlight control switch 2-37
Headlights 8-26
Head restraints. 1-11
Heated seats 2-41, 2-42, 2-43
Heated steering wheel 2-44
Heater
Heater and air conditioner controls. 4-43
Heater operation 4-44
High voltage components HEV-10
Hill descent control system 5-45
Hill start assist system. 5-46
HomeLink® Universal Transceiver 2-63
Hood release. 3-22
Hook
Luggage hook 2-53
Horn 2-41
Hybrid System
Stops operating while driving. 6-9
Vehicle does not start 6-10
Hybrid vehicle characteristics HEV-12

I

Ignition Switch
Push-Button Ignition Switch 5-10
Image viewer 4-19
Immobilizer system 2-32, 3-4, 5-13
Important vehicle information label 9-11
In-cabin microfilter 8-19
Increasing fuel economy. 5-35
Indicator lights and audible reminders
(See warning/indicator lights and audible reminders) 2-9
Inside automatic anti-glare mirror. 3-33
Instrument brightness control. 2-39
Instrument panel 0-6, 2-2
Instrument panel dimmer switch 2-39
Intelligent Key system
Key operating range. 3-9
Key operation 3-10
Mechanical key 3-3
Remote keyless entry operation. 3-14
Troubleshooting guide. 3-18
Warning signals 3-18
Interior light. 2-61
Inverter
Checking inverter coolant level 8-10
Inverter cooling system 8-9
iPod® Player 4-84, 4-86
ISOFIX child restraints 1-27

J

Jump starting. 6-11

K

Key fob battery replacement 8-24
Keyless entry
With Intelligent Key system
(See Intelligent Key system). 3-14
Keys, For Intelligent Key system. 3-2, 3-7

L

Labels
- Air conditioner specification label 9-12
- C.M.V.S.S. certification label 9-11
- Emission control information label 9-11
- Engine serial number 9-11
- F.M.V.S.S. certification label. 9-11
- Tire and Loading Information label 9-12
- Vehicle identification number (VIN) plate. .9-10
- Warning labels (for SRS) 1-64

LATCH (Lower Anchors and Tethers for CHildren) System 1-27
Lift gate. 3-23
Lift gate release 3-27
Light
- Air bag warning light 1-65, 2-15
- Brake light (See stop light) 8-27
- Bulb check/instrument panel 2-10
- Bulb replacement 8-27
- Charge warning light 2-11
- Fog light switch 2-40
- Headlight and turn signal switch 2-36
- Headlight control switch 2-37
- Headlights 8-26
- Interior light. 2-61
- Light bulbs 8-26
- Low tire pressure warning light 2-12
- Low windshield-washer fluid warning light 2-14, 2-29
- Passenger air bag and status light 1-56
- Security indicator light. 2-17
- Spotlights (See map light) 2-62
- Warning/indicator lights and audible reminders 2-9

Lights
- Map lights 2-62

Lock
- Child safety rear door lock 3-7
- Door locks 3-5
- Glove box lock 2-49
- Lift gate release 3-27
- Power door locks 3-6

Loose fuel cap warning. 2-30, 3-29
Low fuel warning light 2-12, 2-14, 2-28
Low tire pressure warning light 2-12
Low windshield-washer fluid warning light 2-14, 2-29
Luggage hook 2-53
Luggage rack (see roof rack) 2-54
Luggage (See vehicle loading information) . .9-13
Luggage storage (see vehicle loading information) 2-54

M

Maintenance
- General maintenance 8-2
- Inside the vehicle 8-3
- Maintenance precautions 8-5
- Outside the vehicle 8-2
- Seat belt maintenance. 1-23
- Under the hood and vehicle 8-4

Malfunction indicator light. 2-16
Manual front seat adjustment. 1-2
Map lights 2-62
Map pocket. 2-48
Memory Seat 3-36
Meters and gauges 2-3
- Instrument brightness control. 2-39

Mirror
- Automatic anti-glare inside mirror. 3-33
- Outside mirror control 3-35
- Outside mirrors 3-35
- Vanity mirror 3-33

Moonroof 2-57

N

NISSAN vehicle immobilizer system 2-32, 3-4, 5-13
NISSAN voice recognition system 4-137

O

Octane rating (See fuel octane rating). 9-5
Odometer 2-4
Oil
- Capacities and recommended fuel/lubricants 9-2
- Changing engine oil 8-11
- Changing engine oil filter 8-13
- Checking engine oil level 8-10
- Engine oil. 8-10
- Engine oil and oil filter recommendation . . .9-6
- Engine oil viscosity 9-6

One shot call 4-113
Outside mirror control 3-35
Outside mirrors 3-35
Owner's manual order form 9-31
Owner's manual/service manual order information 9-31

P

Parking
- Parking brake operation 5-18
- Parking/parking on hills 5-39

Phone, Bluetooth® hands-free system 4-109, 4-124
Power
- Front seat adjustment 1-4
- Power door locks 3-6
- Power outlet 2-46, 2-48
- Power rear windows 2-56
- Power steering fluid 8-14
- Power steering system 5-40
- Power windows 2-55
- Rear power windows 2-56

Power inverter switch 2-45
Power meter 2-6
Power outlet 2-46, 2-48
Power steering 5-40
Power steering fluid 8-14
Precautions
- Maintenance precautions 8-5
- On-pavement and off-road driving precautions 5-6
- Precautions on booster seats 1-25, 1-32, 1-39, 1-44
- Precautions on child restraints 1-25, 1-32, 1-39, 1-44
- Precautions on seat belt usage 1-16
- Precautions on supplemental restraint system 1-47
- Precautions when starting and driving 5-2

Pre-tensioner seat belt system 1-63
Push starting 6-13

R

Radio
- Car phone or CB radio 4-108
- FM/AM/SAT radio with CD/DVD player . .4-70
- FM/AM/SAT radio with compact disc (CD) player 4-63
- Steering wheel audio control switch 4-94

Readiness for inspection maintenance (I/M) test 9-30
Rear power windows 2-56
Rear sonar system 5-47
RearView Monitor 4-21
Rear window and outside mirror defroster switch 2-36
Rear window wiper and washer switches . . .2-35
Recorders
- Event data 9-31

Refrigerant recommendation 9-7
Registering your vehicle in another country . .9-10
Remote Start 3-20, 5-14
Reporting safety defects (US only) 9-29
Roof rack 2-54

S

Safety
- Child safety rear door lock 3-7
- Child seat belts 1-25, 1-32, 1-39, 1-44
- Reporting safety defects (US only) 9-29

Seat adjustment
- Front manual seat adjustment 1-2
- Front power seat adjustment 1-4
- Second row bench seats 1-6, 1-8

Seatback pockets 2-49
Seat belt
- Child safety 1-23
- Infants and small children 1-24
- Injured Person 1-19
- Larger children 1-24
- Precautions on seat belt usage 1-16
- Pregnant women 1-19
- Pre-tensioner seat belt system 1-63
- Seat belt extenders 1-22
- Seat belt maintenance 1-23
- Seat belts 1-16
- Shoulder belt height adjustment 1-22
- Three-point type with retractor 1-19

Seat belt extenders 1-22
Seat belt warning light 1-19, 2-14
Seats
- 2nd row bench seat adjustment 1-6, 1-8
- Adjustment 1-2
- Armrests 1-9
- Automatic drive positioner 3-36
- Front seats 1-2
- Heated seats 2-41, 2-42, 2-43
- Manual front seat adjustment 1-2

Security indicator light 2-17
Security system (NISSAN vehicle immobilizer system), engine start 2-32, 3-4, 5-13
Security systems
- Vehicle security system 2-31

Self-adjusting brakes 8-21
Service manual order form 9-31
Servicing air conditioner 4-47
Shoulder belt height adjustment 1-22
Sonar
- Rear system 5-47

Spark plug replacement 8-18

Speedometer 2-4
Spotlights (See map light) 2-62
SRS warning label 1-64
Stability control 5-42
Starting
Before starting the engine. 5-13
Jump starting 6-11
Precautions when starting and driving 5-2
Push starting 6-13
Starting the engine 5-14
Starting the engine 5-14
Steering
Heated steering wheel 2-44
Power steering fluid 8-14
Power steering system 5-40
Steering wheel audio control switch 4-94
Stop light 8-27
Storage 2-48
Storage bin 2-54
Sunglasses case. 2-50
Sunroof (see Moonroof). 2-57
Sun visors 3-32
Supplemental air bag warning labels 1-64
Supplemental air bag warning light . . .1-65, 2-15
Supplemental front impact air bag system . . .1-54
Supplemental restraint system
Information and warning labels 1-64
Precautions on supplemental restraint system 1-47
Supplemental restraint system (Supplemental air bag system) 1-47
Switch
Autolight switch 2-37
Automatic power window switch 2-57
Fog light switch 2-40
Hazard warning flasher switch 6-2
Headlight and turn signal switch 2-36
Headlight control switch 2-37
Instrument brightness control 2-39
Power door lock switch 3-6
Power inverter switch 2-45
Rear window and outside mirror defroster switch. 2-36
Rear window wiper and washer switches 2-35
Tow mode switch 2-46
Turn signal switch 2-39
Vehicle dynamic control (VDC) off switch. 2-45
Windshield wiper and washer switch . . .2-33

T

Tachometer 2-5
Theft (NISSAN vehicle immobilizer system), engine start 2-32, 3-4, 5-13
Three-way catalyst 5-2
Tire
Flat tire 6-3
Spare tire 6-4, 8-40
Tire and Loading Information label 9-12
Tire chains 8-37
Tire placard. 9-12
Tire pressure 8-30
Tire rotation. 8-37
Tires of 4-wheel drive 8-39
Types of tires 8-36
Uniform tire quality grading 9-28
Wheels and tires. 8-30
Wheel/tire size. 9-9
Tire pressure
Low tire pressure warning light 2-12
Tire Pressure Monitoring System (TPMS) 5-3
Top tether strap child restraint 1-29
Towing
4-wheel drive models 6-15
Flat towing 9-27
Towing load/specification 9-20
Tow truck towing. 6-14
Trailer towing 9-17
Towing a trailer 9-17
Tow mode switch 2-46
Transceiver
HomeLink® Universal Transceiver 2-63
Transmission
Continuously Variable Transmission (CVT) fluid 8-13
Driving with Continuously Variable Transmission (CVT) 5-15
Travel (See registering your vehicle in another country). 9-10
Trip odometer 2-4
Turn signal switch 2-39

U

Uniform tire quality grading 9-28
USB interface
Audio file operation 4-79, 4-81
Video file operation 4-82

V

Vanity mirror 3-33

Vehicle dimensions and weights 9-9
Vehicle does not start 6-10
Vehicle dynamic control (VDC) off switch . . .2-45
Vehicle dynamic control (VDC) system. 5-42
Vehicle Dynamic Control (VDC) system 5-42
Vehicle identification. 9-10
Vehicle identification number (VIN)
(Chassis number) 9-10
Vehicle identification number (VIN) plate. . . .9-10
Vehicle immobilizer system 2-32, 3-4, 5-13
Vehicle loading information 9-13
Vehicle recovery. 6-16, 6-17
Vehicle security system 2-31
Vehicle security system (NISSAN vehicle immobilizer system), engine start. 2-32, 3-4, 5-13
Ventilators 4-41
Visors 3-32
Voice recognition system 4-137

W

Warning
- Air bag warning light 1-65, 2-15
- Anti-lock brake warning light 2-10
- Battery charge warning light 2-11
- Engine oil pressure warning light 2-12
- Hazard warning flasher switch 6-2
- Loose fuel cap warning. 2-30, 3-29
- Low fuel warning light 2-12, 2-14, 2-28
- Low tire pressure warning light 2-12
- Low windshield-washer fluid warning light 2-14, 2-29
- Passenger air bag and status light 1-56
- Seat belt warning light 1-19, 2-14
- Supplemental air bag warning light .1-65, 2-15
- Vehicle security system 2-31
- Warning/indicator lights and audible reminders 2-9
- Warning labels (for SRS) 1-64

Warning/indicator lights and audible reminders 2-9
- Audible reminders 2-9
- Indicator lights 2-9
- Warning lights 2-9

Warning lights 2-9
Washer switch
- Rear window wiper and washer switches 2-35
- Windshield wiper and washer switch . . .2-33

Weights (See dimensions and weights) 9-9
Wheels and tires. 8-30
Wheel/tire size. 9-9
When traveling or registering your vehicle in another country 9-10
Windows
- Locking passengers' windows 2-56
- Power rear windows. 2-56
- Power windows 2-55
- Rear power windows 2-56

Windshield-washer fluid. 8-15
Windshield wiper and washer switch 2-33
Windshield wiper blades 8-20
Wiper
- Rear window wiper and washer switches 2-35
- Windshield wiper and washer switch . . .2-33
- Wiper blades. 8-20

RECOMMENDED FUEL:

Use unleaded regular gasoline with an octane rating of at least 87 AKI (Anti-Knock Index) number (Research octane number 91).

⚠ CAUTION

- **Using a fuel other than that specified could adversely affect the emission control system, and may also affect the warranty coverage.**
- **Under no circumstances should a leaded gasoline be used, because this will damage the three-way catalyst.**
- **Do not use E-15 or E-85 fuel in your vehicle. Your vehicle is not designed to run on E-15 or E-85 fuel. Using E-15 or E-85 fuel in a vehicle not specifically designed for E-15 or E-85 fuel can adversely affect the emission control devices and systems of the vehicle. Damage caused by such fuel is not covered by the NISSAN new vehicle limited warranty.**
- **U.S. government regulations require ethanol dispensing pumps to be identified by a small, square, orange and black label with the common abbreviation or the appropriate percentage for that region.**

For additional information, see “Recommended fluids/lubricants and capacities” in the “Technical and consumer information” section.

RECOMMENDED ENGINE OIL:

▪Genuine NISSAN engine oil or equivalent

▪Engine oil with API Certification Mark

▪Viscosity SAE 0W-20

Refer to “Engine oil and oil filter recommendations” in the “Technical and consumer information” section of this manual.

COLD TIRE PRESSURE:

Refer to Tire and Loading Information label.

The label is typically located on the driver side center pillar or on the driver’s door. For additional information, refer to “Wheels and tires” in the “Maintenance and do-it-yourself” section of this manual.

RECOMMENDED NEW VEHICLE BREAK-IN PROCEDURE:

During the first 1,200 mi (2,000 km) of vehicle use, follow the recommendations outlined in the “Break-in schedule” information found in the “Starting and driving” section of this manual. Follow these recommendations for the future reliability and economy of your new vehicle. Failure to follow these recommendations may result in vehicle damage or shortened engine life.

Printing : September 2014 (02)
Publication No.: OM15EA HR52U0
Printed in U.S.A.

R52-D