05FC2-03

CHECK MODE PROCEDURE

1. DTC CHECK (CHECK MODE)

HINT:

Hand-held tester only:

Compared to the normal mode, the check mode is more sensitive for detecting malfunctions. Furthermore, the same diagnostic items which are detected in the normal mode can also be detected in the check mode.

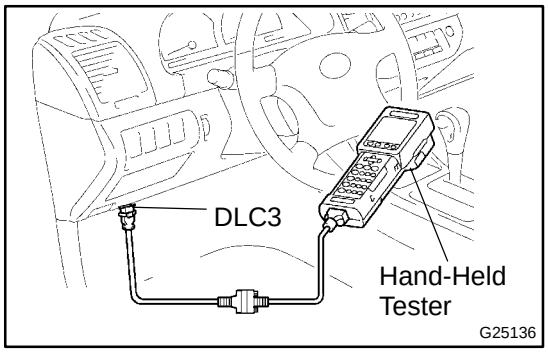

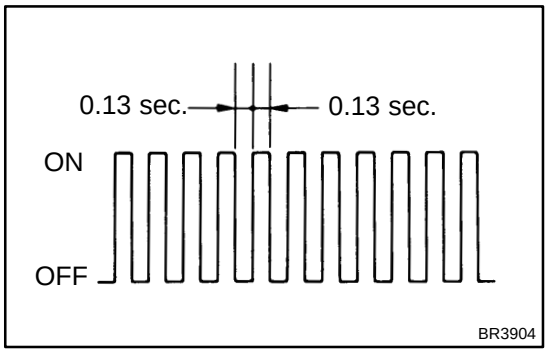

(a) Procedure for Check Mode using the hand-held tester.

(1) Check the initial conditions.
- ★ Battery positive voltage 11 V or more
- ★ Throttle valve fully closed
- ★ Transaxle in the P or N position
- ★ A/C switch is off

(2) Turn the ignition switch off.

(3) Connect the hand-held tester to the DLC3.

(4) Turn the ignition switch to the ON position and turn the hand-held tester main switch on.

(5) When you use hand-held tester:
Select the item ”DIAGNOSIS/ENHANCED OBD II/ CHECK MODE” (Check that the MIL flashes).

NOTICE:

All DTCs and freeze frame data recorded will be erased if: 1) the hand-held tester is used to change the ECM from normal mode to check mode or vice-versa; or 2) during check mode, the ignition switch is turned from the ON to ACC position or turned OFF.

(6) Start the engine (the MIL goes off after the engine starts).

(7) Perform ”DRIVE PATTERN” for the ECT test (see page 05-1 132).
(Or, simulate the conditions of the malfunction described by the customer).

NOTICE:

Leave the ignition switch in the ON position until you have checked the DTCs, etc.

(8) After simulating malfunction conditions, use the hand-held tester diagnosis selector to check the DTCs and freeze frame data, etc.

(9) When you use hand-held tester:
Select the item ”DIAGNOSIS/ENHANCED OBD II/ DTC INFO/CURRENT CODES”.

(10) After checking the DTC, inspect the applicable circuit.

(11) See page 05-1 152 to confirm the details of the DTCs.

cardiagn.com

2. DTC CLEAR

(a) When using the OBD II scan tool or hand-held tester: Clearing the DTCs.

(1) Connect the OBD II scan tool or hand-held tester to the DLC3.

(2) Turn the ignition switch to the ON position and turn the OBD II scan tool or the hand-held tester main switch on.

(3) When you use hand-held tester:
Select the item ”DIAGNOSIS/ENHANCED OBD II/ DTC INFO/CLEAR CODES [YES] button”.

HINT:
When operating the OBD II scan tool (complying with SAE J1978) or hand-held tester to erase the codes, the DTCs and freeze frame data will be erased. (See the OBD II scan tool’s instruction book for operating instructions.)

(b) When not using the OBD II scan tool or hand-held tester: Clearing the DTCs.

(1) Disconnect the battery terminal or remove the EFI and ETCS fuses from the engine room J/B for 60 seconds or more. However if you disconnect the battery terminal, perform the ”INITIALIZE” procedure.

cardiagn.com

05FC7-03

DEFINITION OF TERMS

Term	Definition
Monitor description	Description of what the ECM monitors and how it detects malfunctions (monitoring purpose and its details).
Related DTCs	Diagnostic code
Typical enabling condition	Preconditions that allow the ECM to detect malfunctions. With all preconditions satisfied, the ECM sets the DTC when the monitored value(s) exceeds the malfunction threshold(s).
Sequence of operation	The priority order that is applied to monitoring, if multiple sensors and components are used to detect the malfunction. While a sensor is being monitored, a sensor or component will not be monitored until the previous monitoring has concluded.
Required sensor/components	The sensors and components that are used by the ECM to detect malfunctions.
Frequency of operation	The number of times that the ECM checks for malfunctions per driving cycle. ”Once per driving cycle” means that the ECM detects a malfunction only one time during a single driving cycle. ”Continuous” means that the ECM detects a malfunction every time when the enabling condition is met.
Duration	The minimum time that the ECM must sense a continuous deviation in the monitored value(s) before setting a DTC. This timing begins after the ”typical enabling conditions” are met.
Malfunction thresholds	Beyond this value, the ECM will conclude that there is a malfunction and set a DTC.
MIL operation	MIL illumination timing after a defect is detected. ”Immediately” means that the ECM illuminates the MIL the instant the ECM determines that there is a malfunction. ”2 driving cycle” means that the ECM illuminates the MIL if the same malfunction is detected again in the 2nd driving cycle.
Component operating range	Normal operation range of sensors and solenoids under normal driving conditions. Use these ranges as a reference. They cannot be used to judge if a sensor or solenoid is defective or not.

cardiagn.com

05FBZ-03

DIAGNOSIS SYSTEM

1. DIAGNOSIS SYSTEM

(a) Description

(1) When troubleshooting OBD II vehicles, the only difference from the usual troubleshooting procedure is to connect an OBD II scan tool complying with SAE J1987 or a hand-held tester to the vehicle, and read off various data output from the vehicle's ECM.

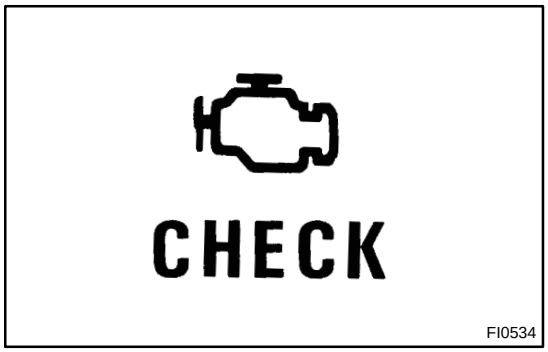

(2) OBD II regulations require that the vehicle's on-board computer illuminate the Malfunction Indicator Lamp (MIL) on the instrument panel when the computer detects a malfunction in the computer itself or in the drive system components which affect the vehicle emissions. In addition to illuminating the MIL when a malfunction is detected, the applicable DTCs prescribed by SAE J2012 are recorded in the ECM memory (see page 05-1 152).

If the malfunction does not occur in 3 consecutive trips, the MIL goes off but the DTCs remain in the ECM memory.

(3) To check the DTCs, connect the OBD II scan tool or hand-held tester to the DLC3 of the vehicle. The OBD II scan tool or hand-held tester also enables you to erase the DTCs and check freeze frame data and various forms of engine data (For operating instructions, see the instruction book).

(4) The DTCs include SAE controlled codes and Manufacturer controlled codes. SAE controlled codes must be set as prescribed by the SAE, while Manufacturer controlled codes can be set freely by a manufacturer within the prescribed limits (see the DTC chart on page 05-1 152).

(5) The diagnosis system operates in the normal mode during the normal vehicle use, and also has a check mode for technicians to simulate malfunction symptoms and perform troubleshooting. Most DTCs use 2 trip detection logic(*) to prevent erroneous detection. By switching the ECM to the check mode when troubleshooting, the technician can cause the MIL to illuminate for a malfunction that is only detected once or momentarily (hand-held tester).

(6) *2 trip detection logic:
When a malfunction is first detected, the malfunction is temporarily stored in the ECM memory. If the same malfunction is detected again during the second test drive, this second detection causes the MIL to illuminate.

cardiagn.com

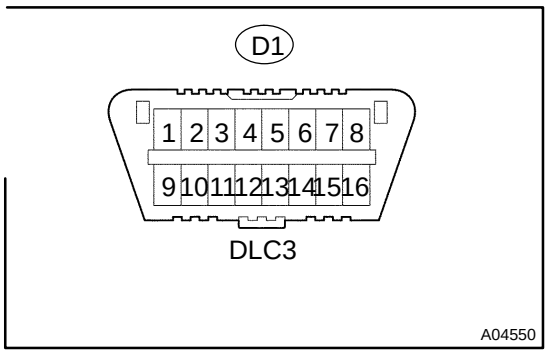

(b) Inspect the DLC3.
The vehicle's ECM uses ISO 9141-2 for communication. The terminal arrangement of the DLC3 complies with SAE J1962 and matches the ISO 9141-2 format.

Tester connection	Condition	Specified condition
7 (Bus ± Line) - 5 (Signal ground)	During communication	Pulse generation
4 (Chassis Ground) - Body	Always	1 Ω or less
5 (Signal Ground) - Body	Always	1 Ω or less
16 (B+) - Body	Always	9 to 14 V

HINT:
If your display shows UNABLE TO CONNECT TO VEHICLE when you have connected the cable of the OBD II scan tool or hand-held tester to the DLC3, turned the ignition switch to the ON position and operated the scan tool, there is a problem on the vehicle side or tool side.

★ If the communication is normal when the tool is connected to another vehicle, inspect the DLC3 on the original vehicle.

★ If the communication is still impossible when the tool is connected to another vehicle, the problem is probably in the tool itself, so consult the Service Department listed in the tool's instruction manual.

(c) Measure the battery voltage.
Battery Voltage: 11 to 14 V

If voltage is below 11 V, recharge the battery before proceeding.

(d) Check the MIL.
(1) The MIL comes on when the ignition switch is turned to the ON position and the engine is not running.

HINT:
If the MIL does not light up, troubleshoot the combination meter.

(2) When the engine is started, the MIL should go off. If the lamp remains on, it means that the diagnosis system has detected a malfunction or abnormality in the system.

cardiagn.com

05FC4-03

DATA LIST/ACTIVE TEST

1. DATA LIST

HINT:

According to the DATA LIST displayed by the OBD II scan tool or hand-held tester, you can read the value of the switch, sensor, actuator and so on without parts removal. Reading the DATA LIST as the first step of troubleshooting is one method to shorten labor time.

(a) Warm up the engine.
(b) Turn the ignition switch off.
(c) Connect the OBD II scan tool or hand-held tester to the DLC3.
(d) Turn the ignition switch to the ON position.
(e) Push the ”ON” button of the OBD II scan tool or the hand-held tester.
(f) When you use hand-held tester:
Select the item ”DIAGNOSIS/ENHANCED OBD II/DATA LIST”.
(g) According to the display on the tester, read the ”DATA LIST”.

Item	Measurement Item/ Range (display)	Normal Condition	Diagnostic Note
STOP LIGHT SW	Stop light SW Status/ ON or OFF	★Brake pedal is depressed: ON ★Brake pedal is released: OFF	-
PNP SW [NSW]	PNP SW Status/ ON or OFF	Shift lever position is; P and N: ON Except P and N: OFF	When the shift lever position displayed on the hand-held tester differs from the actual position, adjustment of the PNP switch or the shift cable may be incorrect. HINT: When the failure still occurs even after adjusting these parts, see page 05-1154.
LOW	PNP SW Status/ ON or OFF	Shift lever position is; L: ON Except L: OFF	↑
2ND	PNP SW Status/ ON or OFF	Shift lever position is; 2 and L: ON Except 2 and L: OFF	↑
REVERSE	PNP SW Status/ ON or OFF	Shift lever position is; R: ON Except R: OFF	↑
DRIVE	PNP SW Status/ ON or OFF	Shift lever position is; D: ON Except D: OFF	↑
OVERDRV CUT SW2	O/D SW Status/ ON or OFF	★IG SW ON: ON ↓ ★O/D SW Push: OFF ↓ ★O/D SW Push: ON	-
SHIFT	Actual Gear Position/ 1st, 2nd, 3rd, 4th or 5th (O/D)	Shift lever position is; ★L: 1st ★2: 1st or 2nd ★3: 1st, 2nd or 3rd ★D(O/D OFF): 1st, 2nd, 3rd or 4th ★D(O/D ON): 1st, 2nd, 3rd, 4th or 5th	-
LOCK UP SOL	Lock Up Solenoid Status/ ON or OFF	★Lock Up: ON ★Except Lock Up: OFF	-
SOLENOID (SLT)	Shift Solenoid SLT Status/ ON or OFF	★Accelerator pedal is depressed: OFF ★Accelerator pedal is released: ON	-

cardiagn.com

AT FLUID TEMP	ATF Temp. Sensor Value/ min.: -40°C (-40°F) max.: 215°C (419°F)	Approx. 80°C (176°F) (After Stall Test)	If the value is "-40°C (-40°F)" or "215°C (419°F)", ATF temp. sensor circuit is open or shorted.
SPD (NC)	Counter Gear Speed/ display: 50 r/min	[HINT] 3rd when shift lever position is D position (After warming up the engine); ★Intermediate shaft speed (NC) becomes close to the engine speed.	-

2. ACTIVE TEST

HINT:

Performing the ACTIVE TEST using the hand-held tester allows the relay, VSV, actuator and so on to operate without parts removal. Performing the ACTIVE TEST as the first step of troubleshooting is one method to shorten labor time.

It is possible to display the DATA LIST during the ACTIVE TEST.

(a) Warm up the engine.
(b) Turn the ignition switch off.
(c) Connect the hand-held tester to the DLC3.
(d) Turn the ignition switch to the ON position.
(e) Push the "ON" button of the hand-held tester.
(f) Select the item "DIAGNOSIS/ENHANCED OBD II/ACTIVE TEST".
(g) According to the display on the tester, perform the "ACTIVE TEST".

Item	Test Details	Diagnostic Note
SHIFT	[Test Details] Operate the shift solenoid valve and set each shift position by yourself. [Vehicle Condition] Less than 50 km/h (31 mph) [Others] ★Press "→" button: Shift up ★Press "←" button: Shift down	Possible to check the operation of the shift solenoid valves.
LOCK UP	[Test Details] Control the shift solenoid DSL to set the automatic transaxle to the lock-up condition. [Vehicle Condition] Vehicle Speed: 60 km/h (37 mph) or more, and 5th gear	Possible to check the DSL operation.
LINE PRESS UP *	[Test Details] Operate the shift solenoid SLT and raise the line pressure. [Vehicle Condition] ★Vehicle Stopped. ★IDL: ON [HINT] OFF: Line pressure up (When the active test of "LINE PRESS UP" is performed, the ECM commands the SLT solenoid to turn off). ON: No action (normal operation)	-

*: "LINE PRESS UP" in the ACTIVE TEST is performed to check the line pressure changes by connecting the SST to the automatic transaxle, which is used in the HYDRAULIC TEST (see page 05-1 120) as well.

HINT:

The pressure values in ACTIVE TEST and HYDRAULIC TEST are different from each other.

cardiagn.com

05FC0-03

DTC CHECK/CLEAR

1. DTC CHECK (NORMAL MODE)

NOTICE:

When the diagnostic system is switched from the normal mode to the check mode, all the DTCs and freeze frame data recorded in the normal mode will be erased. So before switching modes, always check the DTCs and freeze frame data, and note them down.

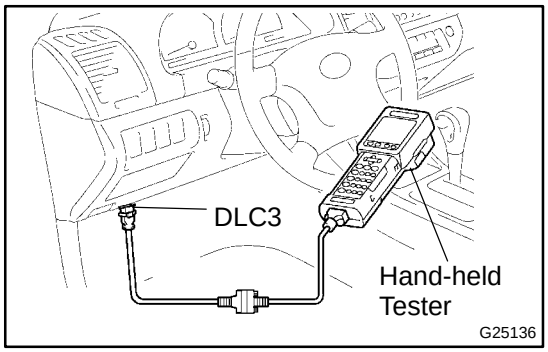

(a) Checking DTCs using the OBD II scan tool or hand-held tester.
   (1) Turn the ignition switch off.
   (2) Connect the OBD II scan tool or hand-held tester to the DLC3.
   (3) Turn the ignition switch to the ON position and turn the OBD II scan tool or the hand-held tester main switch on.
   (4) When you use hand-held tester:
   Select the item ”DIAGNOSIS/ENHANCED OBD II/ DTC INFO/CURRENT CODES”.
   (5) Use the OBD II scan tool or hand-held tester to check the DTCs and freeze frame data and note them down (For operating instructions, see the OBD II scan tool’s instruction book).
   (6) See page 05-1 152 to confirm the details of the DTCs.

NOTICE:

When simulating symptoms with an OBD II scan tool (excluding hand-held tester) to check the DTCs, use the normal mode. For codes on the DTCs chart which are subject to ”2 trip detection logic”, turn the ignition switch off after the symptom is simulated once. Then repeat the simulation process again. When the problem has been simulated twice, the MIL illuminates on the instrument panel and DTCs are recorded in the ECM.

cardiagn.com

2. DTC CLEAR

(a) When using the OBD II scan tool or hand-held tester: Clearing the DTCs.

(1) Connect the OBD II scan tool or hand-held tester to the DLC3.

(2) Turn the ignition switch to the ON position and turn the OBD II scan tool or the hand-held tester main switch on.

(3) When you use hand-held tester:
Select the item ”DIAGNOSIS/ENHANCED OBD II/ DTC INFO/CLEAR CODES [YES] button”.

HINT:
When operating the OBD II scan tool (complying with SAE J1978) or hand-held tester to erase the codes, the DTCs and freeze frame data will be erased. (See the OBD II scan tool’s instruction book for operating instructions.)

(b) When not using the OBD II scan tool or hand-held tester: Clearing the DTCs.

(1) Disconnect the battery terminal or remove the EFI and ETCS fuses from the engine room J/B for 60 seconds or more. However if you disconnect the battery terminal, perform the ”INITIALIZE” procedure.

cardiagn.com

05FC1-03

FAIL-SAFE CHART

1. FAIL-SAFE

This function minimizes the loss of the ECT functions when any malfunction occurs in a sensor or solenoid.

(a) ATF (Automatic Transmission Fluid) temperature sensor:
When the ATF temperature sensor has a malfunction, 5th upshift is prohibited.

(b) Counter gear speed sensor NC (Speed sensor NC):
When the counter gear speed sensor has a malfunction, 5th upshift is prohibited.

(c) Shift solenoid valve DSL:
When the solenoid valve DSL has a malfunction, the current to the solenoid valve is stopped.
This stops lock-up control, then fuel economy decreases.

cardiagn.com

(d) Shift solenoid valve SL1, SL2, SL3 and S4:

Fail safe function:

If either of the shift solenoid valve circuits develops an open or short, the ECM turns the other shift solenoid ”ON” and ”OFF” in order to shift into the gear positions shown in the table below.

Manual shifting as shown in the following table must be done (In case of a short circuit, the ECM stops sending the current to the short circuited solenoid).

Even if starting the engine in the fail-safe mode, the gear position remains in the same position.

○ : ON △ : According to Flex Lock-up × : OFF

→ : Condition in the normal operation is shown on the left of ”→ ”.
Condition in the fail-safe mode is shown on the right of ”→ ”.

Normal	Solenoid Valve	SL1	○	×	○	×	×
		SL2	○	○	×	△	△
		SL3	×	×	×	○	○
		S4	×	×	×	×	○
	Gear Position		1st	2nd	3rd	4th	5th
SL1 Malfunction (During driving at 1st or 2nd)	Solenoid Valve	SL1	×				
		SL2	○	○	×→○	△→○	△→○
		SL3	×	×	×	○→×	○→×
		S4	×	×	×	×	○→×
	Gear Position		1st → 2nd	2nd	3rd → 2nd	4th → 2nd	5th → 2nd
SL1 Malfunction (During driving at 3rd)	Solenoid Valve	SL1	×				
		SL2	○→△	○→△	×→△	△	△
		SL3	×	×	×	○→×	○→×
		S4	×→○	×→○	×→○	×→○	○
	Gear Position		1st → 4th	2nd→ 4th	3rd → 4th	4th	5th → 4th
SL1 Malfunction (During driving at 4th or 5th)	Solenoid Valve	SL1	×				
		SL2	○→△	○→△	×→△	△	△
		SL3	×→○	×→○	×→○	○	○
		S4	×	×	×	×	○
	Gear Position		1st → 4th	2nd→ 4th	3rd → 4th	4th	5th → 4th
SL2 Malfunction	Solenoid Valve	SL1	○	×→○	○	×→○	×→○
		SL2	×				
		SL3	×	×	×	○→×	○→×
		S4	×→○	×→○	×→○	×→○	○
	Gear Position		1st → 4th	2nd→ 4th	3rd → 4th	4th	5th → 4th
SL3 Malfunction	Solenoid Valve	SL1	○	×	○	×→○	×→○
		SL2	○	○	×	△	△
		SL3	×				
		S4	×	×	×	×→○	○
	Gear Position		1st	2nd	3rd	4th	5th → 4th
S4 Malfunction	Solenoid Valve	SL1	○	×	○	×	×
		SL2	○	○	×	△	△
		SL3	×	×	×	○	○
		S4	×				
	Gear Position		1st	2nd	3rd	4th	5th → 4th
SL1, SL2, SL3, and S4 Malfunction	Solenoid Valve	SL1	×				
		SL2	×				
		SL3	×				
		S4	×				
	Gear Position		1st → 4th	2nd→ 4th	3rd → 4th	4th	5th → 4th

cardiagn.com

05FBW-03

HYDRAULIC TEST

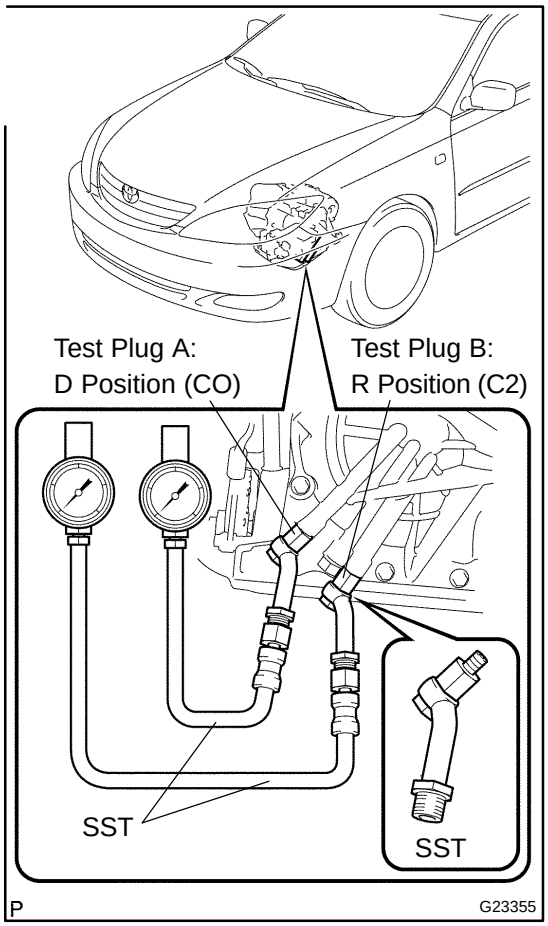

1. PERFORM HYDRAULIC TEST

(a) Measure the line pressure.

NOTICE:

- ★ **Perform the test at the normal operation fluid temperature: 50 to 80˚C (122 to 176˚F)**
- ★ **The line pressure test should always be carried out in pairs. One technician should observe the conditions of wheels or wheel stoppers outside the vehicle while the other is performing the test.**
- ★ **Be careful to prevent SST hose from interfering with the exhaust pipe.**
- ★ **This check must be conducted after checking and adjusting engine.**
- ★ **Perform under condition that A/C is OFF.**
- ★ **When conducting stall test, do not continue more than 10 seconds.**

(1) Warm up the ATF (Automatic Transmission Fluid).

(2) Lift the vehicle up.

(3) Remove the engine under cover.

(4) Connect hand-held tester to DLC3.

(5) Remove the test plug A on the transaxle case front left side and install the SST.

SST 09992-00095 (09992- 00231, 09992-00271)

NOTICE:

There is a difference in installation point between D position and R position.

(6) Start the engine.

(7) Using hand-held tester, shift to the D position and hold 3rd gear by active test, and measure the line pressure in idling.

Specified line pressure:

Condition	D position
Idling	372 to 412 kPa (3.8 to 4.2 kgf/cm^2, 54 to 60 psi)

(8) Turn the ignition switch off.

cardiagn.com

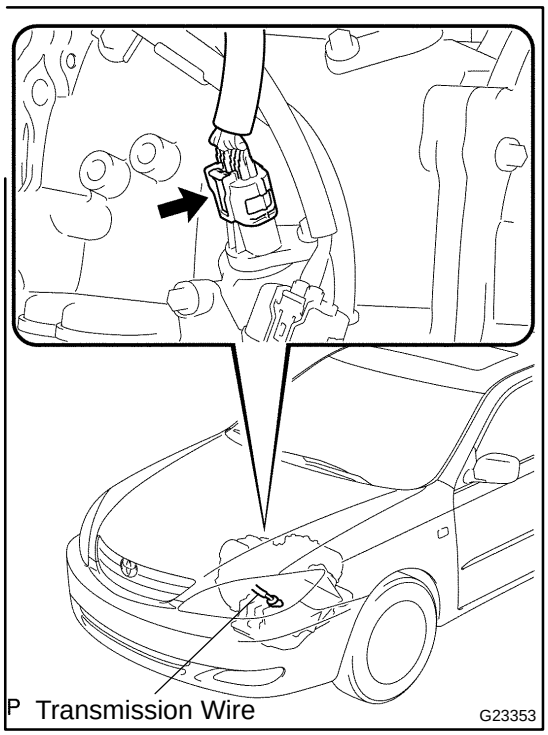

(9) Disconnect the connector of the transmission wire.

HINT:

Disconnect the connector only when performing the D position stall test.

(10) Start the engine.

(11) Firmly depress the brake pedal, shift to the D position, depress the accelerator pedal all the way down and check the line pressure while the stall test is performed.

Specified line pressure:

Condition	D position
Stall test	931 to 1,031 kPa (9.5 to 10.5 kgf/cm^2, 135 to 150 psi)

(12) Turn the ignition switch off.

(13) Remove the SST, install the test plug A.

(14) Remove the test plug B, install the SST and start engine.

SST 09992-00095 (09992- 00231, 09992-00271)

(15) Connect the transmission wire connector, depress the brake pedal firmly, shift to the R position and check that the line pressure while the engine is idling and during the stall test.

Specified line pressure:

Condition	R position
Idling	672 to 742 kPa (6.9 to 7.6 kgf/cm^2, 97 to 108 psi)
Stall test	1,768 to 1,968 kPa (18.0 to 20.1 kgf/cm^2, 256 to 285 psi)

(16) Remove the SST, install the test plug B.

(17) Clear the DTC.

Evaluation:

Problem	Possible cause
Measured values are higher than specified in all positions	★Shift solenoid valve (SLT) defective ★Regulator valve defective
Measured values are lower than specified in all positions	★Shift solenoid valve (SLT) defective ★Regulator valve defective ★Oil pump defective ★U/D (Underdrive) direct clutch defective
Pressure is low in the D position only	★D position circuit fluid leak ★Forward clutch defective
Pressure is low in the R position only	★R position circuit fluid leak ★Reverse clutch defective ★1st and reverse brake defective

cardiagn.com

05FBY-03

INITIALIZATION

1. RESET MEMORY

CAUTION:

Perform the RESET MEMORY (AT initialization) when replacing the automatic transaxle assy, engine assy or ECM.

NOTICE:

Hand-held tester only

HINT:

The ECM memorizes the condition that the ECT controls the automatic transaxle assy and engine assy according to those characteristics. Therefore, when the automatic transaxle assy, engine assy, or ECM has been replaced, it is necessary to reset the memory so that the ECM can memorize the new information.

Reset procedure is as follows.

(a) Turn the ignition switch off.

(b) Connect the hand-held tester to the DLC3.

(c) Turn the ignition switch to the ON position and turn the hand-held tester main switch on.

(d) Select the item ”DIAGNOSIS/ENHANCED OBD II”.

(e) Perform the reset memory procedure from the ENGINE menu.

cardiagn.com

CAUTION:

After performing the RESET MEMORY, be sure to perform the ROAD TEST (see page 05-1 115) described earlier.

HINT:

The ECM learns through use of the ROAD TEST.

Tester menu flow:

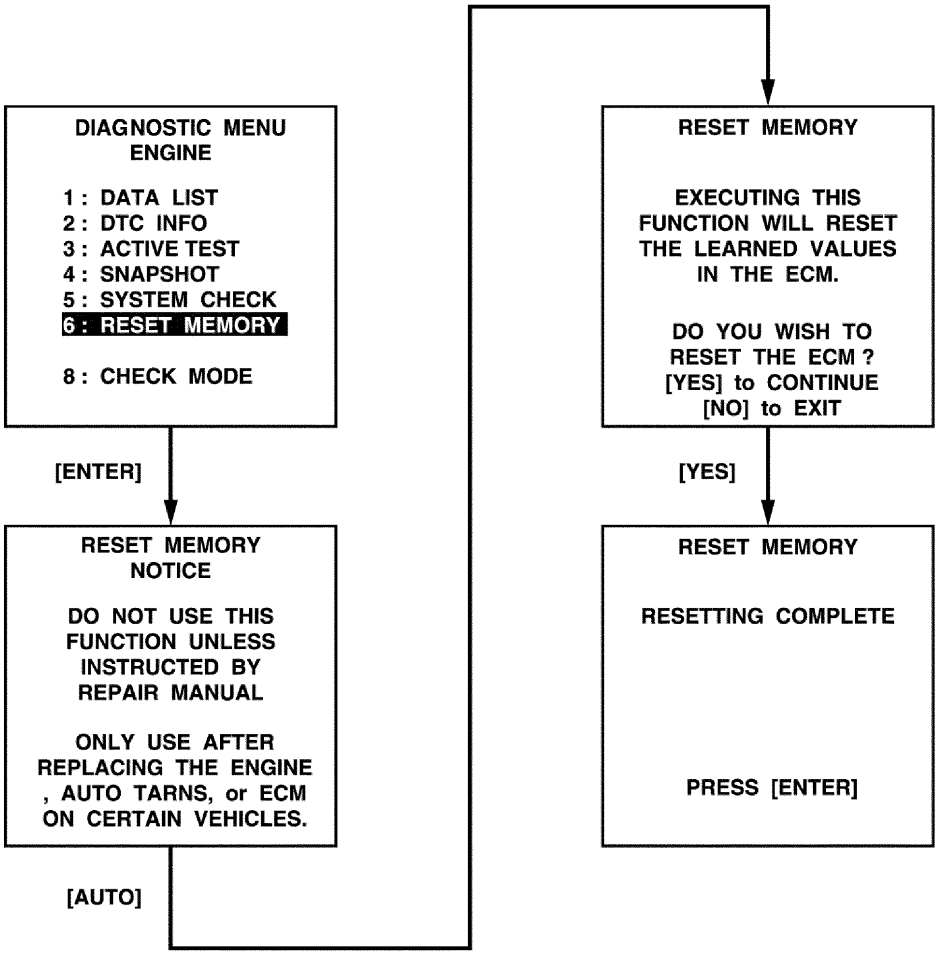

P G23367

cardiagn.com

05MCL-01

LIST OF DISABLE A MONITOR

HINT:

This table indicates ECM monitoring status for the items in the upper columns if the DTCs in each line on the left are being set.

As for the ”X” mark, when the DTC on the left is stored, detection of the DTC in the upper column is not performed.

cardiagn.com

Monitor detected malfunction

Fault code	Fault code	Component/ system	Monitor disablement (X—disabled)																								
			P0010,P0020	P0011	P0012	P0016,P0018	P0021	P0022	P0030,50	P0135,P0155	P0036,56	P0043,44,63,64	P0100	P0101	P0105	P0106	P0110	P0115	P0116	P0120,P0121	P0125	P0128	P0130-P0153	P0134,P0154	P0136,P0156	P0142,P0162	P0171,P0172	P0300-P0308
			P0010,P0020	P0011	P0012	P0016,P0018	P0021	P0022	P0031,32,51,52	P0031,32,51,52	P0037,38,57,58	P0043,44,63,64	P0100-P0103	P0101	P0105-P0108	P0106	P0110-P0113	P0115-P0118	P0116	P0120-P0223,P2135	P0125	P0128	P0130-P0153	P0134,P0154	P0136,P0156	P0142,P0162	P0171,P0172	P0300-P0308
			VVT VSV 1, 2	VVT System 1 – Advance	VVT System 1 – Retard	VVT System – Misalignment	VVT System 2 – Advance	VVT System 2 – Retard	O2 Sensor Heater–Sensor1	A/F Sensor Heater–Sensor1	O2 Sensor Heater–Sensor2	O2 Sensor Heater–Sensor3	MAF sensor	MAF sensor	MAP sensor	MAP sensor	IAT sensor	ECT sensor	ECT sensor	TP sensor	Insufficient ECT for Closed Loop	Thermostat	O2 Sensor–Sensor1	O2 Sensor, A/F sensor (No Activity)–Sensor1	O2 Sensor–Sensor2	O2 Sensor–Sensor3	Fuel system	Misfire
P0010,P0020	P0010,P0020	VVT VSV 1, 2																				X					X	
P0011	P0011	VVT System 1 – Advance				X		X														X					X	
P0012	P0012	VVT System 1 – Retard				X		X														X					X	
P0016,P0018	P0016,P0018	VVT System – Misalignment																										
P0021	P0021	VVT System 2 – Advance			X	X																X					X	
P0022	P0022	VVT System 2 – Retard			X	X																X					X	
P0030,50	P0031,32,51,52	O2 Sensor Heater–Sensor1																				X	X	X	X	X	X	
P0135,P0155	P0031,32,51,52	A/F Sensor Heater–Sensor1																				X			X	X	X	
P0036,56	P0037,38,57,58	O2 Sensor Heater–Sensor2																							X	X		
P0043,44,63,64	P0043,44,63,64	O2 Sensor Heater–Sensor3																								X		
P0100,P0101	P0100-P0103	MAF sensor		X	X		X	X											X		X	X	X	X	X	X	X	X
P0105,P0106	P0105-P0108	MAP sensor		X	X		X	X											X		X	X	X	X	X	X	X	X
P0110	P0110-P0113	IAT sensor																			X	X	X	X	X	X		X
P0115,P0116	P0115-P0118	ECT sensor		X	X	X	X	X						X		X					X	X	X	X	X	X	X	X
P0120,P0121	P0120-P0223,P2135	TP sensor												X		X							X	X	X	X	X	X
P0125	P0125	Insufficient ECT for Closed Loop		X	X		X	X						X		X						X	X	X	X	X	X	X
P0128	P0128	Thermostat																										
P0130-P0153	P0130-P0153	O2 Sensor–Sensor1																				X		X	X	X		
P0134,P0154	P0134,P0154	O2 Sensor, A/F sensor (No Activity)–Sensor1								X												X	X		X	X	X	
P0136,P0156	P0136,P0156	O2 Sensor–Sensor2																										
P0142,P0162	P0142,P0162	O2 Sensor–Sensor3																										
P0171,P0172	P0171,P0172	Fuel system																				X	X	X	X	X		
P0300-P0308	P0300-P0308	Misfire							X													X	X	X	X	X		
P0325,P0330	P0325-P0333	Knock sensor																										X
P0335	P0335	CKP sensor		X	X		X	X						X		X						X	X	X	X	X	X	X
P0340,P0341	P0340,P0341	CMP sensor		X	X		X	X						X		X						X	X	X	X	X	X	X
P0340-P0346	P0340-P0346	VVT sensor 1, 2																				X						
P0351-P0358	P0351-P0358	Ignitor		X	X		X	X														X					X	
P0385	P0385	CKP sensor 2												X		X						X	X	X	X	X	X	X
P0401	P0401	EGR system (closed)																				X					X	
P0402	P0402	EGR system (open)																				X	X	X	X	X	X	
P0405,P0409	P0405-P0409	Lift sensor																										
P0420,P0430	P0420,P0430	Catalyst																										
P0442-P0456	P0442-P0456	EVAP system																					X	X	X	X		
P0450,P0451	P0450-P0453	EVAP press sensor																										

P A92385

A98648

cardiagn.com

Monitor detected malfunction

Fault code	Fault code	Component/ system	Monitor disablement (×−disabled)																							
			P0010,P0020	P0011	P0012	P0016,P0018	P0021	P0022	P0030,50	P0135,P0155	P0036,56	P0043,44,63,64	P0100	P0101	P0105	P0106	P0110	P0115	P0116	P0120,P0121	P0125	P0128	P0130-P0153	P0134,P0154	P0136,P0156	P0142,P0162	P0171,P0172	P0300-P0308
			P0010,P0020	P0011	P0012	P0016,P0018	P0021	P0022	P0031,32,51,52	P0031,32,51,52	P0037,38,57,58	P0043,44,63,64	P0100-P0103	P0101	P0105-P0108	P0106	P0110-P0113	P0115-P0118	P0116	P0120-P0223,P2135	P0125	P0128	P0130-P0153	P0134,P0154	P0136,P0156	P0142,P0162	P0171,P0172	P0300-P0308
			VVT VSV 1, 2	VVT System 1 – Advance	VVT System 1 – Retard	VVT System – Misalignment	VVT System 2 – Advance	VVT System 2 – Retard	O2 Sensor Heater–Sensor1	A/F Sensor Heater–Sensor1	O2 Sensor Heater–Sensor2	O2 Sensor Heater–Sensor3	MAF sensor	MAF sensor	MAP sensor	MAP sensor	IAT sensor	ECT sensor	ECT sensor	TP sensor	Insufficient ECT for Closed Loop	Thermostat	O2 Sensor–Sensor1	O2 Sensor, A/F sensor (No Activity)–Sensor1	O2 Sensor–Sensor2	O2 Sensor–Sensor3	Fuel system	Misfire
P0500	P0500	VSS																				×	×	×	×	×	×	×
P0511	P0511	IAC valve																					×					
P0510	P0510	Idle switch												×		×						×	×		×	×	×	×
P0560	P0560	System Voltage																										
P0617	P0617	Starter signal																										
P0705	P0705	Shift lever position switch																										
P0710	P0710-P0713	Trans fluid temp sensor																										
P0720-P0793	P0720-P0793	Output speed sensor																										
P0715-P0717	P0715-P0717	Input speed sensor																										
P0724	P0724	Stop lamp switch																										
P0741-P0796	P0741-P0796	Trans solenoid (function)																										
P0748-P0798	P0748-P0798	Trans solenoid (range)																										
P0850	P0850	PNP switch																										×
P1010,P1020	P1010,P1020	VVTL																				×					×	
P1011,12(,21,22)	P1011,12(,21,22)	VVTL system1(,2)																				×					×	
P1126	P1126	Electronic magnet clutch																										
P1129	P1129	Electronic throttle system																										
P1430	P1430	HC adsorber ACT press sensor																										
P2004,6	P2004,6	Intake Manifold Runner Control																										
P2009,10	P2009,10	Intake Manifold Runner Control Circuit																										
P2014,16,17	P2014,16,17	Intake Manifold Runner Position Sensor																										
P2102,P2103	P2102,P2103	Throttle motor																										
P2120-P2138	P2120-P2138	Accel position sensor																										
P2196,P2198	P2196,P2198	A/F sensor (rationality)																				×			×	×		
P2226	P2226	BARO sensor																					×		×	×		
P2237,2240	P2237,2240	A/F sensor (open)																				×			×	×		
P2423,24	P2423,24	HC Absorption Catalyst																										
P2430,2,3	P2430,2,3	A/R Pressure Sensor (Low/High)																										
P2431	P2431	A/R Pressure Sensor (Rationality)																										
P2440	P2440	A/R control valve stuck open																					×	×	×	×	×	
P2441	P2441	A/R control valve stuck close																					×	×	×	×	×	
P2444	P2444	AIP stuck On																					×	×	×	×	×	
P2445	P2445	AIP stuck Off																					×	×	×	×	×	
P2714-P2759	P2714-P2759	Trans solenoid (SLU-SLD)																										
P2A00,P2A03	P2A00,P2A03	A/F sensor (slow response)																				×			×	×		

P

A92386

cardiagn.com

Monitor detected malfunction

Fault code	Fault code	Component/ system	Knock sensor	CKP sensor	CMP sensor	VVT sensor 1, 2	Ignitor	CKP sensor 2	EGR system (closed)	EGR system (open)	EGR Lift sensor	EGR Lift sensor	Catelyst	EVAP system	EVAP press sensor	VSS (ECT2 sensor)	VSS (ECT1 sensor, non-ECT)	VSS (M/T)	IAC valve	Idle switch	System Voltage	Starter signal	Shift lever position switch	Trans fluid temp sensor	Output speed sensor	Input speed sensor	Stop lamp switch	Trans solenoid (function)*1
		Monitor disablement (X—disabled)																										
			P0325,P0330	P0335	P0340,P0341	P0340-P0346	P0351-P0358	P0385	P0401	P0402	P0405	P0409	P0420,P0430	P0440-P0446	P0450,P0451	P0500	P0500	P0500	P0511	P0510	P0560	P0617	P0705	P0710-P0713	P0720-P0793	P0715-P0717	P0724	P0741-P0796
			P0325-P0333	P0335	P0340,P0341	P0340-P0346	P0351-P0358	P0385	P0401	P0402	P0405,P0406	P0409	P0420,P0430	P0440-P0446	P0450-P0453	P0500	P0500	P0500	P0511	P0510	P0560	P0617	P0705	P0710-P0713	P0720-P0793	P0715-P0717	P0724	P0741-P0796
P0010,P0020	P0010,P0020	VVT VSV 1, 2																										X
P0011	P0011	VVT System 1 – Advance							X	X			X	X					X									
P0012	P0012	VVT System 1 – Retard							X	X			X	X					X									
P0016,P0018	P0016,P0018	VVT System – Misalignment																										
P0021	P0021	VVT System 2 – Advance							X	X			X	X					X									
P0022	P0022	VVT System 2 – Retard							X	X			X	X					X									
P0030,50	P0031,32,51,52	O2 Sensor Heater–Sensor1							X	X			X						X									X
P0135,P0155	P0031,32,51,52	A/F Sensor Heater–Sensor1							X	X			X						X									
P0036,56	P0037,38,57,58	O2 Sensor Heater–Sensor2											X															
P0043,44,63,64	P0043,44,63,64	O2 Sensor Heater–Sensor3																										
P0100,P0101	P0100-P0103	MAF sensor							X	X			X	X				X	X									X
P0105,P0106	P0105-P0108	MAP sensor							X	X			X	X				X	X									X
P0110	P0110-P0113	IAT sensor							X	X				X														X
P0115,P0116	P0115-P0118	ECT sensor							X	X		X	X	X				X	X									X
P0120,P0121	P0120-P0223,P2135	TP sensor							X	X			X	X			X		X									X
P0125	P0125	Insufficient ECT for Closed Loop							X	X		X	X	X				X	X									X
P0128	P0128	Thermostat																										
P0130-P0153	P0130-P0153	O2 Sensor–Sensor1							X	X			X						X									X
P0134,P0154	P0134,P0154	O2 Sensor, A/F sensor (No Activity)–Sensor1							X	X			X						X									X
P0136,P0156	P0136,P0156	O2 Sensor–Sensor2											X															
P0142,P0162	P0142,P0162	O2 Sensor–Sensor3																										
P0171,P0172	P0171,P0172	Fuel system							X	X			X	X					X									X
P0300-P0308	P0300-P0308	Misfire											X	X					X									X
P0325,P0330	P0325-P0333	Knock sensor							X	X																		X
P0335	P0335	CKP sensor							X	X			X	X					X									X
P0340,P0341	P0340,P0341	CMP sensor							X	X			X	X					X									X
P0340-P0346	P0340-P0346	VVT sensor 1, 2																										
P0351-P0358	P0351-P0358	Ignitor							X	X			X	X					X									X
P0385	P0385	CKP sensor 2							X	X			X	X					X									
P0401	P0401	EGR system (closed)											X															X
P0402	P0402	EGR system (open)											X	X					X									X
P0405,P0409	P0405-P0409	Lift sensor																										
P0420,P0430	P0420,P0430	Catalyst																										
P0442-P0456	P0442-P0456	EVAP system																	X									
P0450,P0451	P0450-P0453	EVAP press sensor												X														

P A92387

A99246

cardiagn.com

Monitor detected malfunction

Fault code	Fault code	Component/ system	Knock sensor	CKP sensor	CMP sensor	VVT sensor 1, 2	Ignitor	CKP sensor 2	EGR system (closed)	EGR system (open)	EGR Lift sensor	EGR Lift sensor	Catalyst	EVAP system	EVAP press sensor	VSS (ECT2 sensor)	VSS (ECT1 sensor, non-ECT)	VSS (M/T)	IAC valve	Idle switch	System Voltage	Starter signal	Shift lever position switch	Trans fluid temp sensor	Output speed sensor	Input speed sensor	Stop lamp switch	Trans solenoid (function)*1
			Monitor disablement (X－disabled)																									
			P0325,P0330	P0335	P0340,P0341	P0340-P0346	P0351-P0358	P0385	P0401	P0402	P0405	P0409	P0420,P0430	P0440-P0446	P0450,P0451	P0500	P0500	P0500	P0511	P0510	P0560	P0617	P0705	P0710	P0720-P0793	P0715-P0717	P0724	P0741-P0796
			P0325-P0333	P0335	P0340,P0341	P0340-P0346	P0351-P0358	P0385	P0401	P0402	P0405,P0406	P0409	P0420,P0430	P0440-P0446	P0450-P0453	P0500	P0500	P0500	P0511	P0510	P0560	P0617	P0705	P0710-P0713	P0720-P0793	P0715-P0717	P0724	P0741-P0796
P0500	P0500	VSS							X	X			X	X					X						X	X		X
P0511	P0511	IAC valve																										
P0510	P0510	Idle switch								X			X	X					X									X
P0560	P0560	System Voltage																										
P0617	P0617	Starter signal																										
P0705	P0705	Shift lever position switch																										
P0710	P0710-P0713	Trans fluid temp sensor																										
P0720-P0793	P0720-P0793	Output speed sensor																										X
P0715-P0717	P0715-P0717	Input speed sensor																										
P0724	P0724	Stop lamp switch																										
P0741-P0796	P0741-P0796	Trans solenoid (function)																										
P0748-P0798	P0748-P0798	Trans solenoid (range)																							X	X		X
P0850	P0850	PNP switch																	X									X
P1010,P1020	P1010,P1020	VVTL																										
P1011,12(,21,22)	P1011,12(,21,22)	VVTL system1(,2)							X	X			X	X					X									
P1126	P1126	Electronic magnet clutch																										
P1129	P1129	Electronic throttle system																										
P1430	P1430	HC adsorber ACT press sensor												X	X													
P2004,6	P2004,6	Intake Manifold Runner Control																										
P2009,10	P2009,10	Intake Manifold Runner Control Circuit																										
P2014,16,17	P2014,16,17	Intake Manifold Runner Position Sensor																										
P2102,P2103	P2102,P2103	Throttle motor																										
P2120-P2138	P2120-P2138	Accel position sensor																										
P2196,P2198	P2196,P2198	A/F sensor (rationality)							X	X			X						X									X
P2226	P2226	BARO sensor																										X
P2237,2240	P2237,2240	A/F sensor (open)							X	X			X						X									X
P2423,24	P2423,24	HC Absorption Catalyst																										
P2430,2,3	P2430,2,3	A/R Pressure Sensor (Low/High)																										
P2431	P2431	A/R Pressure Sensor (Rationality)																										
P2440	P2440	A/R control valve stuck open							X	X			X															
P2441	P2441	A/R control valve stuck close							X	X			X															
P2444	P2444	AIP stuck On							X	X			X															
P2445	P2445	AIP stuck Off							X	X			X															
P2714-P2759	P2714-P2759	Trans solenoid (SLU-SLD)																										X
P2A00,P2A03	P2A00,P2A03	A/F sensor (slow response)							X	X			X						X									X

P

A92388

cardiagn.com

Monitor detected malfunction

Fault code	Fault code	Component/ system	Monitor disablement (×—disabled)																								
			P0741-P0796	P0748-P0798	P0850	P1010,P1020	P1011,12(,21,22)	P1126	P1129	P1430	P2004,6	P2009,P2010	P2014,16,17	P2102,P2103	P2120-P2138	P2196,P2198	P2226	P2237,P2240	P2423,24	P2430,2,3	P2431	P2440	P2441	P2444	P2445	P2714-P2759	P2A00,P2A03
			Trans solenoid (function) *2	Trans solenoid (range)	PNP switch	VVTL	VVTL system1(,2)	Electronic magnet clutch	Electronic throttle system	HC adsorber ACT press sensor	Intake Manifold Runner Control	Intake Manifold Runner Control Circuit	Intake Manifold Runner Position Sensor	Throttle motor	Accel position sensor	A/F Sensor (Rationality) -Sensor1	BARO sensor	A/F Sensor (Open) -Sensor1	HC Absorption Catalyst	A/R Pressure Sensor (Low/High)	A/R Pressure Sensor (Rationality)	A/R control valve stuck open	A/R control valve stuck close	AIP stuck On	AIP stuck Off	Trans solenoid (SLU-SLD)	A/F sensor (Slow response) -Sensor1
P0010,P0020	P0010,P0020	VVT VSV 1, 2																				×	×	×	×		
P0011	P0011	VVT System 1 – Advance																				×	×	×	×		
P0012	P0012	VVT System 1 – Retard																				×	×	×	×		
P0016,P0018	P0016,P0018	VVT System – Misalignment																				×	×	×	×		
P0021	P0021	VVT System 2 – Advance																				×	×	×	×		
P0022	P0022	VVT System 2 – Retard																				×	×	×	×		
P0030,50	P0031,32,51,52	O2 Sensor Heater–Sensor1																	×			×	×	×	×		
P0135,P0155	P0031,32,51,52	A/F Sensor Heater–Sensor1														×		×	×			×	×	×	×		×
P0036,56	P0037,38,57,58	O2 Sensor Heater–Sensor2														×			×								
P0043,44,63,64	P0043,44,63,64	O2 Sensor Heater–Sensor3																	×								
P0100,P0101	P0100-P0103	MAF sensor				×	×									×		×	×			×	×	×	×		×
P0105,P0106	P0105-P0108	MAP sensor				×	×									×		×	×			×	×	×	×		×
P0110	P0110-P0113	IAT sensor									×					×		×				×	×	×	×		×
P0115,P0116	P0115-P0118	ECT sensor	×			×	×				×					×		×	×			×	×	×	×		×
P0120,P0121	P0120-P0223,P2135	TP sensor														×		×	×			×	×	×	×		×
P0125	P0125	Insufficient ECT for Closed Loop	×			×										×		×	×			×	×	×	×		×
P0128	P0128	Thermostat																									
P0130-P0153	P0130-P0153	O2 Sensor–Sensor1																	×			×	×	×	×		
P0134,P0154	P0134,P0154	O2 Sensor, A/F sensor (No Activity)–Sensor1														×		×	×			×	×	×	×		×
P0136,P0156	P0136,P0156	O2 Sensor–Sensor2														×			×								
P0142,P0162	P0142,P0162	O2 Sensor–Sensor3																	×								
P0171,P0172	P0171,P0172	Fuel system														×		×	×			×	×	×	×		×
P0300-P0308	P0300-P0308	Misfire														×		×	×			×	×	×	×		×
P0325,P0330	P0325-P0333	Knock sensor																				×	×	×	×		
P0335	P0335	CKP sensor				×	×									×		×	×			×	×	×	×		×
P0340,P0341	P0340,P0341	CMP sensor				×	×									×		×	×			×	×	×	×		×
P0340-P0346	P0340-P0346	VVT sensor 1, 2																				×	×	×	×		
P0351-P0358	P0351-P0358	Ignitor																	×			×	×	×	×		
P0385	P0385	CKP sensor 2				×	×									×		×	×			×	×	×	×		×
P0401	P0401	EGR system (closed)																	×								
P0402	P0402	EGR system (open)														×		×	×			×	×	×	×		×
P0405,P0409	P0405-P0409	Lift sensor																									
P0420,P0430	P0420,P0430	Catalyst																									
P0442-P0456	P0442-P0456	EVAP system														×		×				×	×	×	×		×
P0450,P0451	P0450-P0453	EVAP press sensor																				×	×	×	×		

P

A92389

cardiagn.com

Monitor detected malfunction

Fault code	Fault code	Component/ system	Monitor disablement (X－disabled)																							
			P0741-P0796	P0748-P0798	P0850	P1010,P1020	P1011,12(,21,22)	P1126	P1129	P1430	P2004,6	P2009.P2010	P2014,16,17	P2102,P2103	P2120-P2138	P2196,P2198	P2226	P2237,P2240	P2423,24	P2430,2,3	P2431	P2440	P2441	P2444	P2445	P2714-P2759	P2A00,P2A03
			P0741-P0796	P0748-P0799	P0850	P1010,P1020	P1011,12(,21,22)	P1126	P1129	P1430	P2004,6	P2009,10	P2014,16,17	P2102,P2103	P2120-P2138	P2196,P2198	P2226	P2237,P2240	P2423,24	P2430,2,3	P2431	P2440	P2441	P2444	P2445	P2714-P2759	P2A00,P2A03
			Trans solenoid (function) *2	Trans solenoid (range)	PNP switch	VVTL	VVTL system1(,2)	Electronic magnet clutch	Electronic throttle system	HC adsorber ACT press sensor	Intake Manifold Runner Control	Intake Manifold Runner Control Circuit	Intake Manifold Runner Position Sensor	Throttle motor	Accel position sensor	A/F Sensor (Rationality) -Sensor1	BARO sensor	A/F Sensor (Open) -Sensor1	HC Absorption Catalyst	A/R Pressure Sensor (Low/High)	A/R Pressure Sensor (Rationality)	A/R control valve stuck open	A/R control valve stuck close	AIP stuck On	AIP stuck Off	Trans solenoid (SLU-SLD)	A/F sensor (Slow response) -Sensor1
P0500	P0500	VSS	X													X		X	X			X	X	X	X		X
P0511	P0511	IAC valve														X		X									X
P0510	P0510	Idle switch														X		X	X								X
P0560	P0560	System Voltage																									
P0617	P0617	Starter signal																									
P0705	P0705	Shift lever position switch																									
P0710	P0710-P0713	Trans fluid temp sensor																									
P0720-P0793	P0720-P0793	Output speed sensor																									
P0715-P0717	P0715-P0717	Input speed sensor																									
P0724	P0724	Stop lamp switch																									
P0741-P0796	P0741-P0796	Trans solenoid (function)																									
P0748-P0798	P0748-P0798	Trans solenoid (range)	X																								
P0850	P0850	PNP switch																									
P1010,P1020	P1010,P1020	VVTL																				X	X	X	X		
P1011,12(,21,22)	P1011,12(,21,22)	VVTL system1(,2)																				X	X	X	X		X
P1126	P1126	Electronic magnet clutch																									
P1129	P1129	Electronic throttle system																									
P1430	P1430	HC adsorber ACT press sensor																									
P2004,6	P2004,6	Intake Manifold Runner Control																									
P2009,10	P2009,10	Intake Manifold Runner Control Circuit																									
P2014,16,17	P2014,16,17	Intake Manifold Runner Position Sensor																									
P2102,P2103	P2102,P2103	Throttle motor																									
P2120-P2138	P2120-P2138	Accel position sensor																									
P2196,P2198	P2196,P2198	A/F sensor (rationality)																	X			X	X	X	X		X
P2226	P2226	BARO sensor														X		X				X	X	X	X		X
P2237,2240	P2237,2240	A/F sensor (open)																	X			X	X	X	X		X
P2423,24	P2423,24	HC Absorption Catalyst																									
P2430,2,3	P2430,2,3	A/R Pressure Sensor (Low/High)																			X	X	X	X	X		
P2431	P2431	A/R Pressure Sensor (Rationality)																				X	X	X	X		
P2440	P2440	A/R control valve stuck open														X		X	X								X
P2441	P2441	A/R control valve stuck close														X		X	X								X
P2444	P2444	AIP stuck On														X		X	X								X
P2445	P2445	AIP stuck Off														X		X	X								X
P2714-P2759	P2714-P2759	Trans solenoid (SLU-SLD)																									
P2A00,P2A03	P2A00,P2A03	A/F sensor (slow response)																	X			X	X	X	X		

P

A92390

cardiagn.com

05FC6-03

MONITOR DRIVE PATTERN

1. MONITOR DRIVE PATTERN FOR ECT TEST

(a) Perform this drive pattern as one method to simulate the detection conditions of the ECT malfunctions. (The DTCs may not be detected due to the driving conditions. And some codes may not be detected through this drive pattern).

HINT:

Preparation for driving

★ Warm up the engine sufficiently. (Engine coolant temperature is 60 ˚C (140 ˚F) or higher.)

★ Drive the vehicle when the atmospheric temperature is -10 ˚C (14 ˚F) or higher. (Malfunction is not detected when the atmospheric temperature is -10 ˚C (14 ˚F) or less.)

Driving note

★ Drive the vehicle through all gears.
Stop → 1st → 2nd → 3rd → 4th → 5th → 5th (lock-up ON).

★ Repeat the above driving pattern three times or more.

NOTICE:

★ **The monitor status can be checked using the OBD II scan tool. When using the hand-held tester, monitor status can be found in the ”ENHANCED OBD II/DATA LIST” or under ”CARB OBD II”.**

★ **In the event that the drive pattern must be interrupted (possibly due to traffic conditions or other factors), the drive pattern can be resumed and, in most cases, the monitor can be completed.**

CAUTION:

Perform this drive pattern on a level road as much as possible and strictly observe the posted speed limits and traffic laws while driving.

cardiagn.com

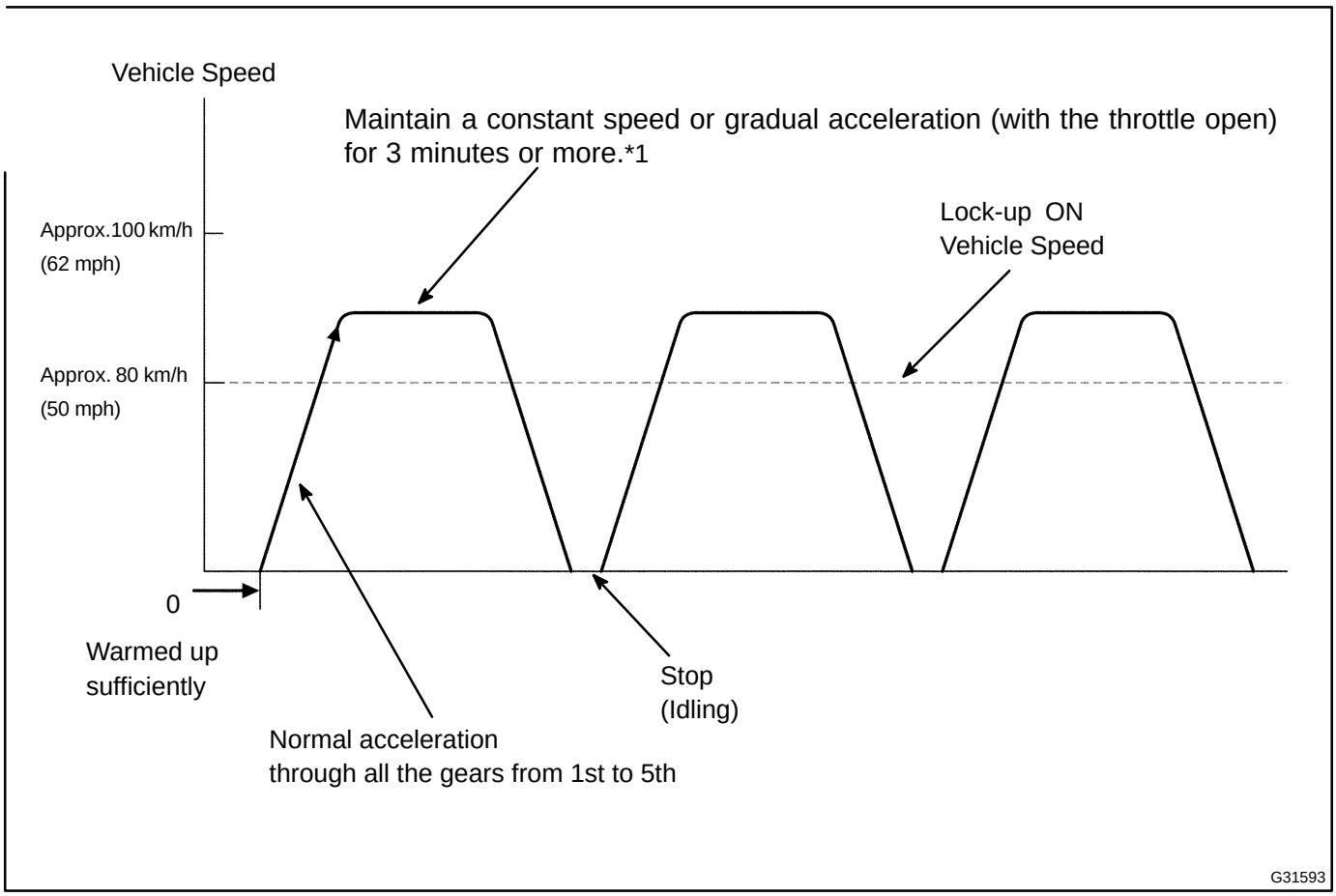

HINT:

*1: Drive at such a speed in the uppermost gear, to engage lock-up. The vehicle can be driven at a speed lower than that in the above diagram under the lock-up condition.

NOTICE:

It is necessary to drive the vehicle for approximately 30 minutes to detect DTC P0711 (ATF temperature sensor malfunction).

cardiagn.com

05FBV-03

MECHANICAL SYSTEM TESTS

1. PERFORM MECHANICAL SYSTEM TESTS

(a) Measure the stall speed.

The object of this test is to check the overall performance of the transaxle and engine by measuring the stall speeds in the D positions.

NOTICE:

★ **Perform the test at the normal operating ATF (Automatic Transmission Fluid) temperature 50 to 80˚C (122 to 176˚F).**

★ **Do not continuously run this test for longer than 10 seconds.**

★ **To ensure safety, do this test in a wide, clear level area which provides good traction.**

★ **The stall test should always be carried out in pairs. One technician should observe the conditions of wheels or wheel stoppers outside the vehicle while the other is doing the test.**

(1) Chock the 4 wheels.
(2) Connect an OBD II scan tool or hand-held tester to the DLC3.
(3) Fully apply the parking brake.
(4) Using your left foot, keep the brake pedal firmly depressed.
(5) Start the engine.
(6) Shift into the D position. Press all the way down on the accelerator pedal with your right foot.
(7) Quickly read the stall speed at this time.

Stall speed: 2,350 ± 150 rpm

Evaluation:

Problem	Possible cause
(a) Stall engine speed is low in D positions	★Engine power output may be insufficient ★Stator one-way clutch is not operating properly HINT: If the value is less than the specified value by 600 rpm or more, the torque converter could be faulty.
(b) Stall engine speed is high in D position	★Line pressure is too low ★Forward clutch slipping ★U/D (Underdrive) brake slipping ★U/D (Underdrive) one-way clutch not operating properly ★No.1 one-way clutch is not operating properly ★Improper fluid level

cardiagn.com

(b) Measure the time lag.

(1) When the shift lever is shifted while the engine is idling, there will be a certain time lapse or lag before the shock can be felt. This is used for checking the condition of the direct clutch, forward clutch, and 1st and reverse brake.

NOTICE:

★ **Perform the test at the normal operating ATF temperature: 50 to 80˚C (122 to 176˚F).**

★ **Be sure to allow for a 1 minute interval between tests.**

★ **Perform the test three times, and measure the time lags. Calculate the average value of the three time lags.**

(2) Connect an OBD II scan tool or hand-held tester to the DLC3.

(3) Fully apply the parking brake.

(4) Start and warm up the engine and check idle speed.

Idle speed: approx. 700 rpm (In N position and A/C OFF)

(5) Shift the lever from the N to D position. Using a stop watch, measure the time from when the lever is shifted until the shock is felt.

Time lag: N → D less than 1.2 seconds

(6) In the same way, measure the time lag for N → R.

Time lag: N → R less than 1.5 seconds

Evaluation (If N → D or N → R time lag is longer than the specified):

Problem	Possible cause
N → D time lag is longer than specified	★Line pressure is too low ★Forward clutch worn ★No.1 one-way clutch not operating properly ★U/D (Underdrive) one-way clutch is not operating ★U/D (Underdrive) brake worn
N → R time lag is longer than specified	★Line pressure is too low ★Reverse clutch worn ★1st and reverse brake worn ★U/D (Underdrive) brake worn

cardiagn.com

05FBX-03

MANUAL SHIFTING TEST

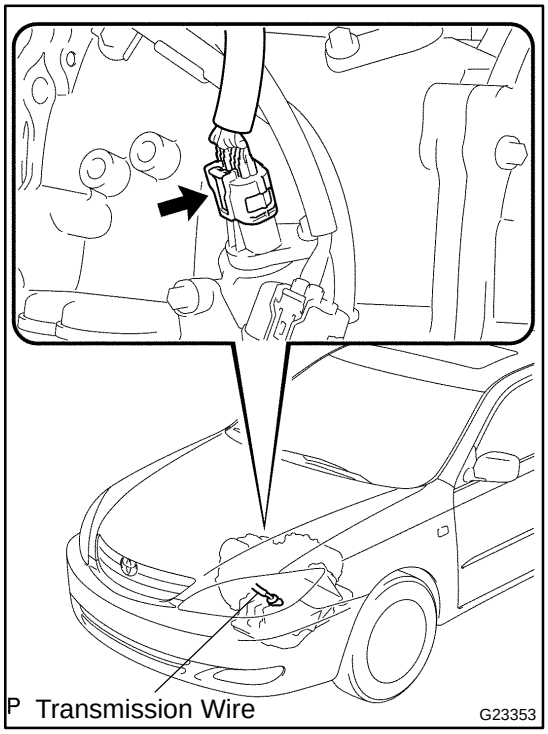

1. PERFORM MANUAL SHIFTING TEST

HINT:

★ With this test, it can be determined whether the trouble occurs in the electrical circuit or is a mechanical problem in the transaxle.

★ If any abnormalities are found in the following test, the problem is in the transaxle itself.

(a) Disconnect the transmission wire connector.

(b) Drive with the transmission wire disconnected.
Shifting the shift lever to the L, 2, 3 and D position to check whether the shifting condition changes the table below.

Shift Position	Shifting Condition
L ⇔ 2	No Shift (Not Change)
2 ⇔ 3	Down Shift ⇔ Up Shift
3 ⇔ D	No Shift (Not Change)

HINT:

When driving with the transmission wire disconnected, the gear position will be as follows:

★ When the shift lever is in the L or the 2 position, the gear is held in the 3rd position.

★ When the shift lever is in the D position, the gear is held in the 4th position.

★ When the shift lever is in the R or the P position, the gear is also in the R or the P position respectively.

(c) Connect the transmission wire connector.

(d) Clear the DTC (see page 05-1 144).

cardiagn.com

O/D MAIN SWITCH CIRCUIT

CIRCUIT DESCRIPTION

The O/D main switch (transmission control switch) is a momentary type switch. When pressing the O/D main switch, the O/D OFF indicator light lights up and the ECM prohibits shifting into O/D, and when pressing it once again, the O/D OFF indicator light goes off and the ECM allows shifting into O/D. Turning the IG switch OFF will reset the O/D OFF indicator light.

WIRING DIAGRAM

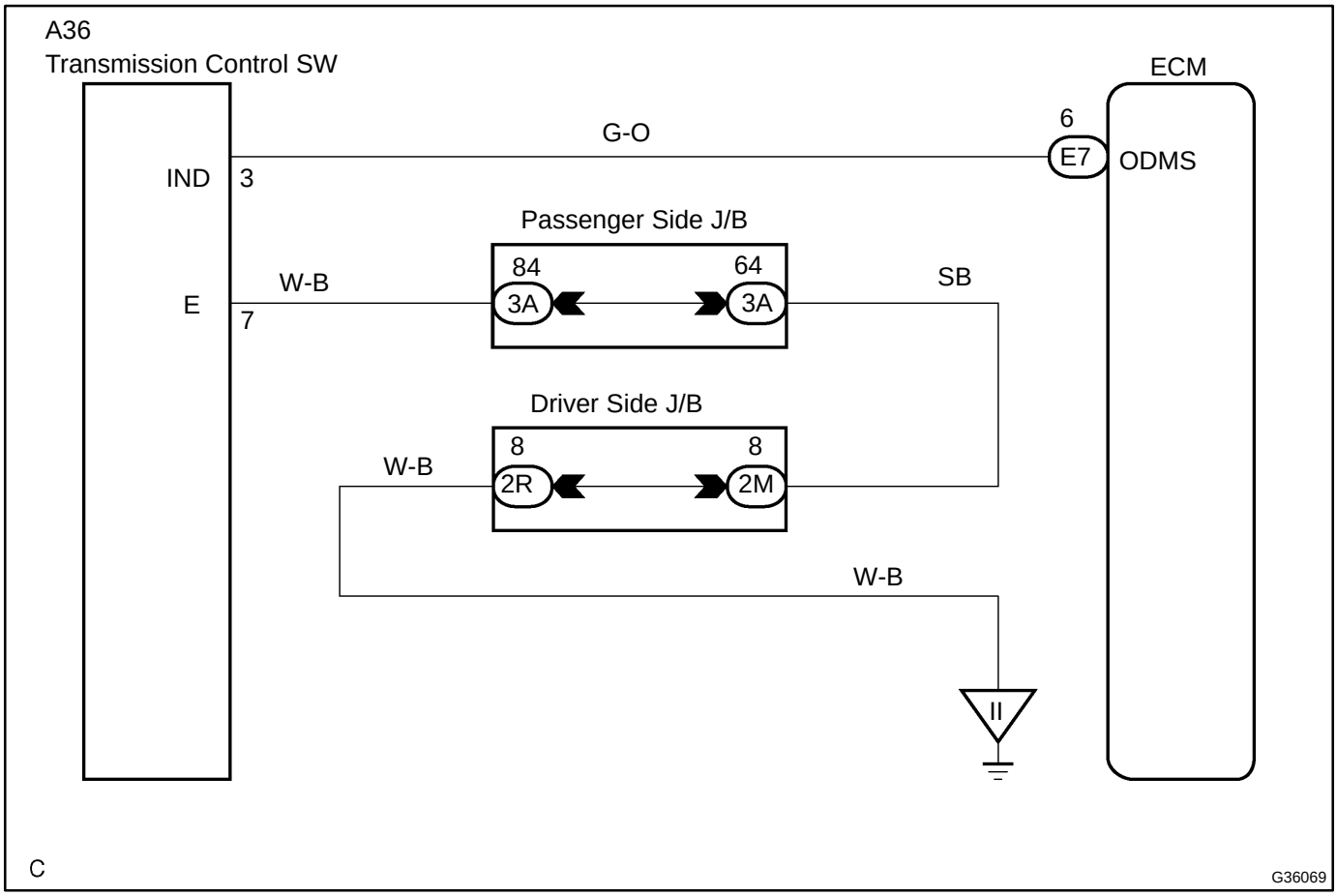

cardiagn.com

INSPECTION PROCEDURE

1 CHECK HARNESS AND CONNECTOR(TRANSMISSION CONTROL SWITCH-BODY GROUND)

Wire Harness Side:
(Connector Front View)

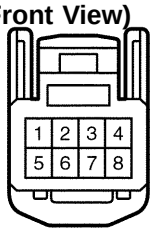

P G23398

(a) Disconnect the transmission control switch connector.
(b) Measure the resistance according to the value(s) in the table below.

Standard:

Tester Connection	Specified Condition
7 - Body ground	Below 1 Ω

NG → **REPAIR OR REPLACE HARNESS OR CONNECTOR (SEE PAGE 01-32)**

OK

2 INSPECT TRANSMISSION CONTROL SWITCH

Switch Side:
(Connector Front View)

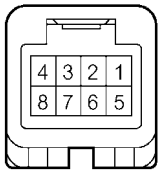

G25187

(a) Measure the resistance according to the value(s) in the table below.

Standard:

Switch Condition	Tester Connection	Specified Condition
Press continuously transmission control switch	3 - 7	Below 1 Ω
Release transmission control switch	↑	10 kΩ or higher

NG → **REPLACE TRANSMISSION CONTROL SWITCH (SEE PAGE 40-53)**

OK

3 CHECK HARNESS AND CONNECTOR(TRANSMISSION CONTROL SWITCH-ECM)

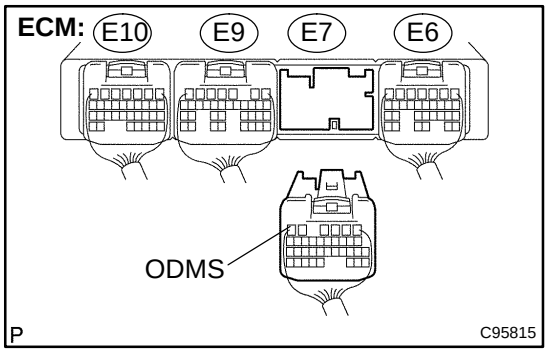

P C95815

(a) Connect the transmission control switch connector.
(b) Disconnect the ECM connector.
(c) Measure the resistance according to the value(s) in the table below.

Standard:

Switch Condition	Tester Connection	Specified Condition
Press continuously transmission control switch	E7 - 6 (ODMS) - Body ground	Below 1 Ω
Release transmission control switch	↑	10 kΩ or higher

NG → **REPAIR OR REPLACE HARNESS OR CONNECTOR (SEE PAGE 01-32)**

OK

PROCEED TO NEXT CIRCUIT INSPECTION SHOWN IN PROBLEM SYMPTOMS TABLE (SEE PAGE 05-1 134)

cardiagn.com

DTC P0705 TRANSMISSION RANGE SENSOR CIRCUIT MALFUNCTION (PRNDL INPUT)

CIRCUIT DESCRIPTION

The park/neutral position switch detects the shift lever position and sends signals to the ECM.

DTC No.	DTC Detection Condition	Trouble Area
P0705	Any 2 or more signals of the following are ON simultaneously (2-trip detection logic) ★NSW input signal is ON. ★R input signal is ON. ★D input signal is ON. ★3 input signal is ON. ★2 input signal is ON.	★Open or short in park/neutral position switch circuit ★Park/neutral position switch ★ECM

MONITOR DESCRIPTION

The park/neutral position switch detects the shift lever position and sends a signal to the ECM.
For security, the park/neutral position switch detects the shift lever position so that engine can be started only when the shift lever is in the P or N position.
The park/neutral position switch sends a signal to the ECM according to the shift position (R, D, 3 or 2). The ECM determines that there is a problem with the switch or related parts if it receives more than 1 position signal simultaneously. The ECM will turn on the MIL and store the DTC.

MONITOR STRATEGY

Related DTCs	P0705: Park/neutral position switch/Verify switch input
Required sensors/Components	Park/neutral position switch
Frequency of operation	Continuous
Duration	2 sec.
MIL operation	2 driving cycles
Sequence of operation	None

TYPICAL ENABLING CONDITIONS

The monitor will run whenever this DTC is not present.	See page 05-1125
Ignition switch	ON
Battery voltage	10.5 V or more

TYPICAL MALFUNCTION THRESHOLDS

Number of the following signal input at the same time	2 or more
NSW switch	ON
R switch	ON
D switch	ON
3 switch	ON
2 switch	ON

COMPONENT OPERATING RANGE

Park/neutral Position switch	The park/neutral position switch sends only one signal to the ECM.

cardiagn.com

WIRING DIAGRAM

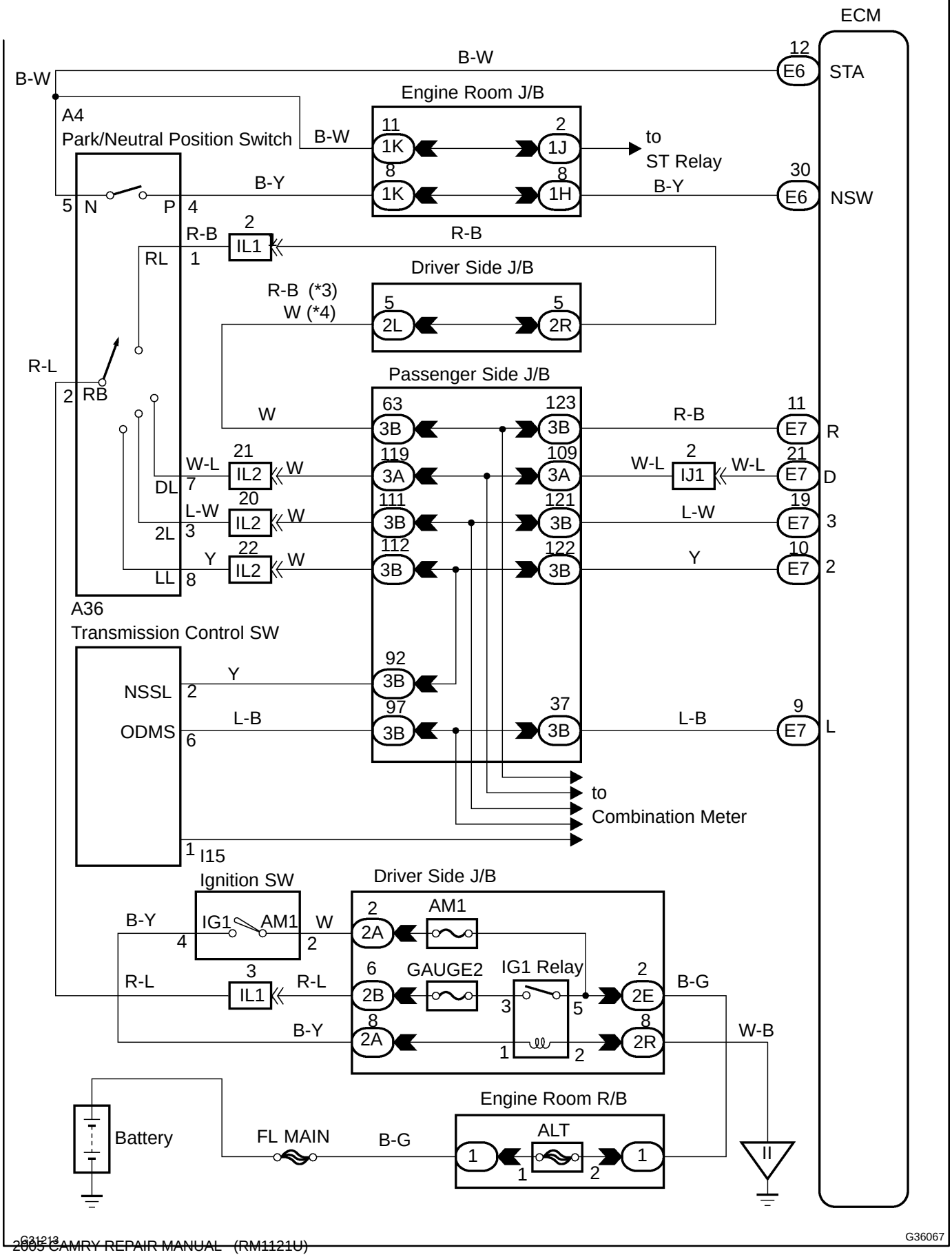

cardiagn.com

INSPECTION PROCEDURE

HINT:

According to the DATA LIST displayed by the OBD II scan tool or hand-held tester, you can read the value of the switch, sensor, actuator and so on without parts removal. Reading the DATA LIST as the first step of troubleshooting is one method to shorten labor time.

(a) Warm up the engine.
(b) Turn the ignition switch off.
(c) Connect the OBD II scan tool or hand-held tester to the DLC3.
(d) Turn the ignition switch to the ON position.
(e) Push the ”ON” button of the OBD II scan tool or the hand-held tester.
(f) When you use hand-held tester:
Select the item ”DIAGNOSIS/ENHANCED OBD II/DATA LIST”.
(g) According to the display on the tester, read the ”DATA LIST”.

Item	Measurement Item/ Range (display)	Normal Condition	Diagnostic Note
PNP SW [NSW]	PNP SW Status/ ON or OFF	Shift lever position is; P and N: ON Except P and N: OFF	When the shift lever position displayed on the hand-held tester differs from the actual position, adjustment of the PNP switch or the shift cable may be incorrect.
LOW	PNP SW Status/ ON or OFF	Shift lever position is; L: ON Except L: OFF	↑
2ND	PNP SW Status/ ON or OFF	Shift lever position is; 2 and L: ON Except 2 and L: OFF	↑
REVERSE	PNP SW Status/ ON or OFF	Shift lever position is; R: ON Except R: OFF	↑
DRIVE	PNP SW Status/ ON or OFF	Shift lever position is; D: ON Except D: OFF	↑

cardiagn.com

1 INSPECT PARK/NEUTRAL POSITION SWITCH ASSY

Switch Side:
(Connector Front View):

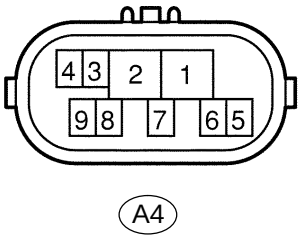

(a) Disconnect the park/neutral position switch connector.
(b) Measure the resistance according to the value(s) in the table below when the shift lever is moved to each position.
Standard:

Shift Position	Tester Connection	Specified Condition
P	2 - 6 and 4 - 5	Below 1 Ω
Except P	↑	10 kΩ or higher
R	2 - 1	Below 1 Ω
Except R	↑	10 kΩ or higher
N	2 - 9 and 4 - 5	Below 1 Ω
Except N	↑	10 kΩ or higher
D	2 - 7	Below 1 Ω
Except D	↑	10 kΩ or higher
3	2 - 3	Below 1 Ω
Except 3	↑	10 kΩ or higher
2 and L	2 - 8	Below 1 Ω
Except 2 and L	↑	10 kΩ or higher

NG → **REPLACE PARK/NEUTRAL POSITION SWITCH ASSY (SEE PAGE 40-3)**

OK

2 INSPECT TRANSMISSION CONTROL SWITCH

Switch Side:
(Connector Front View):

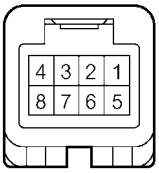

(a) Connect the park/neutral position switch connector.
(b) Disconnect the transmission control switch connector of the shift lock control unit assy.
(c) Measure the resistance according to the value(s) in the table below when the shift lever is moved to each position.
Standard:

Shift Position	Tester Connection	Specified Condition
2	6 - 2	10 kΩ or higher
L	↑	Below 1 Ω

NG → **REPLACE TRANSMISSION CONTROL SWITCH (SEE PAGE 40-53)**

OK

cardiagn.com

3 CHECK HARNESS AND CONNECTOR(PARK/NEUTRAL POSITION SWITCH - ECM)

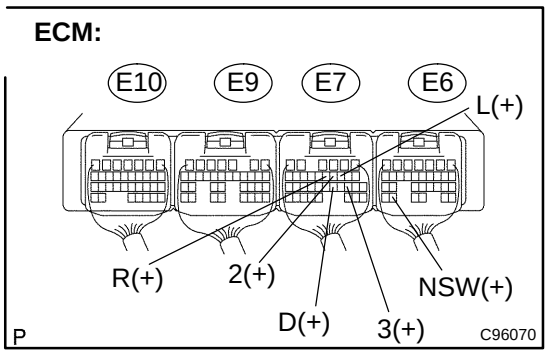

(a) Connect the transmission control switch connector of the shift lock control unit assy.

(b) Turn the ignition switch to the ON position, and measure the voltage according to the value(s) in the table below when the shift lever is moved to each position.

Standard:

Shift Position	Tester connection	Specified condition
P and N	E6 - 30 (NSW) - Body ground	Below 2 V
Except P and N	↑	10 to 14 V
R	E7 - 11 (R) - Body ground	10 to 14 V*
Except R	↑	Below 1 V
D	E7 - 21 (D) - Body ground	10 to 14 V
Except D	↑	Below 1 V
3	E7 - 19 (3) - Body ground	10 to 14 V
Except 3	↑	Below 1 V
2 and L	E7 - 10 (2) - Body ground	10 to 14 V
Except 2 and L	↑	Below 1 V
L	E7 - 9 (L) - Body ground	10 to 14 V
Except L	↑	Below 1 V

HINT:
*: The voltage will drop slightly due to the turning on of the back up light.

NG → **REPAIR OR REPLACE HARNESS OR CONNECTOR (SEE PAGE 01-32)**

OK

REPLACE ECM (SEE PAGE 10-9)

cardiagn.com

DTC	P0710	TRANSMISSION FLUID TEMPERATURE SENSOR ”A” CIRCUIT

DTC	P0712	TRANSMISSION FLUID TEMPERATURE SENSOR ”A” CIRCUIT LOW INPUT

DTC	P0713	TRANSMISSION FLUID TEMPERATURE SENSOR ”A” CIRCUIT HIGH INPUT

CIRCUIT DESCRIPTION

The ATF (Automatic Transmission Fluid) temperature sensor converts the fluid temperature into a resistance value which is input into the ECM.
The ECM applies a voltage to the temperature sensor through ECM terminal THO1 (THO).
The sensor resistance changes with the transmission fluid temperature. As the temperature becomes higher, the sensor resistance decreases.
One terminal of the sensor is grounded so that the sensor resistance decreases and the voltage goes down as the temperature becomes higher.
The ECM calculates the fluid temperature based on the voltage signal.

DTC No.	DTC Detection Condition	Trouble Area
P0710	(a) and (b) are detected momentarily within 0.5 sec. when neither P0712 nor P0713 is detected (1-trip detection logic) (a) ATF temperature sensor resistance is less than 79 Ω. (b) ATF temperature sensor resistance is more than 156 kΩ. HINT: Within 0.5 sec., the malfunction switches from (a) to (b) or from (b) to (a)	★Open or short in ATF temperature sensor circuit ★Transmission wire (ATF temperature sensor) ★ECM
P0712	ATF temperature sensor resistance is less than 79 Ω for 0.5 sec. or more (1-trip detection logic)	★Short in ATF temperature sensor circuit ★Transmission wire (ATF temperature sensor) ★ECM
P0713	ATF temperature sensor resistance is more than 156 kΩ when 15 minutes or more have elapsed after the engine start DTC is detected for 0.5 sec. or more (1-trip detection logic)	★Open in ATF temperature sensor circuit ★Transmission wire (ATF temperature sensor) ★ECM

MONITOR DESCRIPTION

The automatic transmission fluid (ATF) temperature sensor converts ATF temperature to an electrical resistance value. Based on the resistance, the ECM determines the ATF temperature, and the ECM detects an open or short in the ATF temperature circuit. If the resistance value of the ATF temperature is less than 79 Ω*1 or more than 156 kΩ*2, the ECM interprets this as a fault in the ATF sensor or wiring. The ECM will turn on the MIL and store the DTC.
*1: 150°C (302°F) or more is indicated regardless of the actual ATF temperature.
*2: -40°C (-40°F) is indicated regardless of the actual ATF temperature.
HINT:
The ATF temperature can be checked on the OBD II scan tool or hand-held tester display.

cardiagn.com

MONITOR STRATEGY

Related DTCs	P0710: ATF temperature sensor/Range check (Chattering) P0712: ATF temperature sensor/Range check (Low resistance) P0713: ATF temperature sensor/Range check (High resistance)
Required sensors/Components	ATF temperature sensor
Frequency of operation	Continuous
Duration	0.5 sec.
MIL operation	Immediate
Sequence of operation	None

TYPICAL ENABLING CONDITIONS

P0710: Range check (Chattering)
P0712: Range check (Low resistance)

The monitor will run whenever these DTCs are not present.	See page 05-1125
The typical enabling condition is not available.	-

P0713: Range check (High resistance)

The monitor will run whenever this DTC is not present.	See page 05-1125
Time after engine start	15 min. or more

TYPICAL MALFUNCTION THRESHOLDS

P0710: Range check (Chattering)

TFT (Transmission fluid temperature) sensor resistance	Less than 79 Ω or More than 156 kΩ

P0712: Range check (Low resistance)

TFT sensor resistance	Less than 79 Ω

P0713: Range check (High resistance)

TFT sensor resistance	More than 156 kΩ

COMPONENT OPERATING RANGE

TFT sensor	Atmospheric temperature to approx. 130°C (266°F)

cardiagn.com

WIRING DIAGRAM

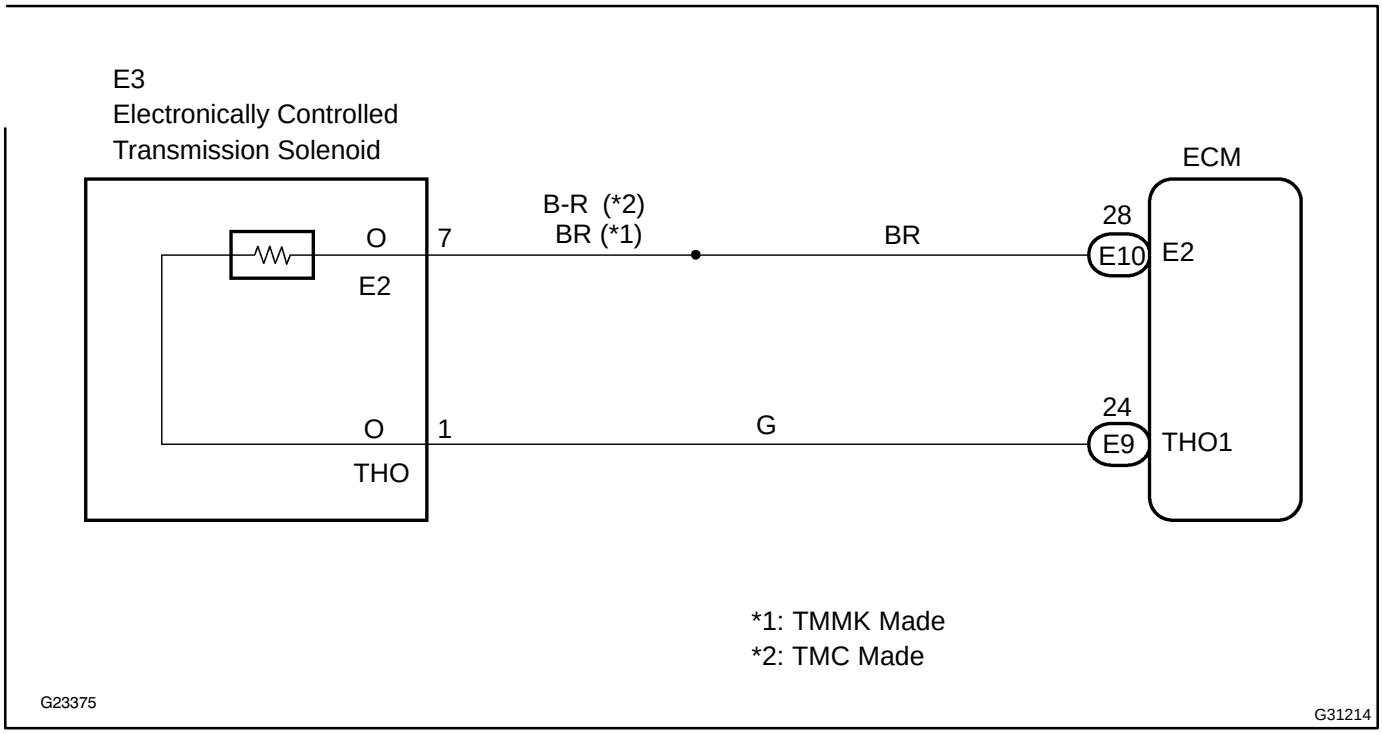

cardiagn.com

INSPECTION PROCEDURE

HINT:
According to the DATA LIST displayed by the OBD II scan tool or hand-held tester, you can read the value of the switch, sensor, actuator and so on without parts removal. Reading the DATA LIST as the first step of troubleshooting is one method to shorten labor time.

(a) Warm up the engine.
(b) Turn the ignition switch off.
(c) Connect the OBD II scan tool or hand-held tester to the DLC3.
(d) Turn the ignition switch to the ON position.
(e) Push the ”ON” button of the OBD II scan tool or the hand-held tester.
(f) When you use hand-held tester:
Select the item ”DIAGNOSIS/ENHANCED OBD II/DATA LIST”.
(g) According to the display on the tester, read the ”DATA LIST”.

Item	Measurement Item/ Range (display)	Normal Condition
AT FLUID TEMP	ATF Temp. Sensor Value/ min.: -40°C (-40°F) max.: 215°C (419°F)	Approx. 80°C (176°F) (After Stall Test)

HINT:
When DTC P0712 is output and OBD II scan tool or hand-held tester output is 150°C (302°F), there is a short circuit.
Measure the resistance between THO1 (THO) and body ground.

Temperature Displayed	Malfunction
-40 ˚C (-40˚F)	Open circuit
150˚C (302˚F) or more	Short circuit

1 INSPECT TRANSMISSION WIRE(ATF TEMPERATURE SENSOR)

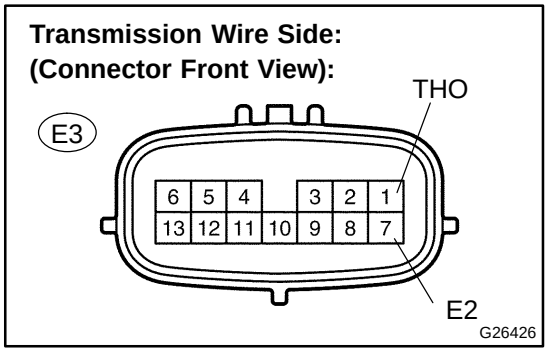

(a) Disconnect the transmission wire connector from the transaxle.
(b) Measure the resistance according to the value(s) in the table below.
Standard:

Tester Connection	Specified Condition
1 (THO) - 7 (E2)	79 Ω to 156 kΩ

(c) Measure the resistance according to the value(s) in the table below.
Standard (Check for short):

Tester Connection	Specified Condition
1 (THO) - Body ground	10 kΩ or higher
7 (E2) - Body ground	↑

NG → **REPAIR OR REPLACE TRANSMISSION WIRE (SEE PAGE 40-34)**

OK

cardiagn.com

2 CHECK HARNESS AND CONNECTOR(TRANSMISSION WIRE - ECM)

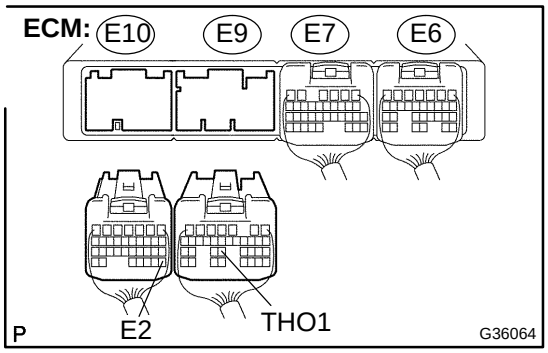

(a) Connect the transmission wire connector to the transaxle.

(b) Disconnect the ECM connectors.

(c) Measure the resistance according to the value(s) in the table below.

Standard:

Tester Connection	Specified Condition
E9 - 24 (THO1) - E10 - 28 (E2)	79 Ω to 156 kΩ

(d) Measure the resistance according to the value(s) in the table below.

Standard (Check for short):

Tester Connection	Specified Condition
E9 - 24 (THO1) - Body ground	10 kΩ or higher
E10 - 28 (E2) - Body ground	↑

NG → **REPAIR OR REPLACE HARNESS OR CONNECTOR (SEE PAGE 01-32)**

OK

REPLACE ECM (SEE PAGE 10-9)

cardiagn.com

DTC P0717 TURBINE SPEED SENSOR CIRCUIT NO SIGNAL

CIRCUIT DESCRIPTION

This sensor detects the rotation speed of the input turbine. By comparing the input turbine speed signal (NT) with the counter gear speed sensor signal (NC), the ECM detects the shift timing of the gears and appropriately controls the engine torque and hydraulic pressure according to various conditions. Thus, providing smooth gear shift.

DTC No.	DTC Detection Condition	Trouble Area
P0717	ECM detects conditions (a), (b) and (c) continuously for 5 sec. or more: (1-trip detection logic) (a) Vehicle speed: 50 km/h (31 mph) or more (b) Park/neutral position switch (NSW and R) is OFF (c) Speed sensor (NT): less than 300 rpm	★Open or short in transmission revolution sensor NT (speed sensor NT) circuit ★Transmission revolution sensor NT (speed sensor NT) ★ECM

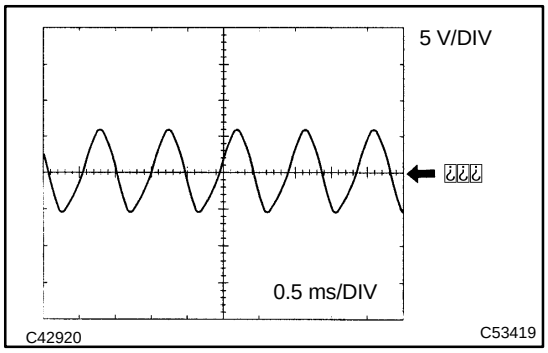

Reference (Using an oscilloscope):

Check the waveform between terminals NT+ and NT- of the ECM connector.

Standard: Refer to the illustration.

Terminal	NT+ - NT-
Tool setting	5V/DIV, 0.5ms/DIV
Vehicle condition	Vehicle speed 20 km/h (12 mph)

MONITOR DESCRIPTION

The NT terminal of the ECM detects the revolving signal from speed sensor (NT) (input RPM). The ECM outputs a gearshift signal comparing the speed sensor (NT) with the speed sensor (NC).

While the vehicle is operating in the 2nd, 3rd, 4th or 5th gear position in the shift position of D, if the input shaft revolution is less than 300 rpm*1 although the output shaft revolution is more than 1,000 rpm*2, the ECM detects the trouble, illuminates the MIL and stores the DTC.

*1: Pulse is not output or is irregularly output.

*2: The vehicle speed is 50 km/h (31 mph) or more.

MONITOR STRATEGY

Related DTCs	P0717: Speed sensor (NT)/Verify pulse input
Required sensors/Components	Speed sensor (NT), Speed sensor (NC)
Frequency of operation	Continuous
Duration	5 sec.
MIL operation	Immediate
Sequence of operation	None

cardiagn.com

TYPICAL ENABLING CONDITIONS

The monitor will run whenever this DTC is not present.	See page 05-1125
Shift change	Shift change is completed and before starting next shift change operation
ECM selected gear	2nd, 3rd, 4th or 5th
Output shaft rpm	1,000 rpm or more
NSW switch	OFF
R switch	OFF
L switch	OFF
Engine	Running
Ignition switch	ON
Starter	OFF

TYPICAL MALFUNCTION THRESHOLDS

Sensor signal rpm	Less than 300 rpm

COMPONENT OPERATING RANGE

Speed sensor (NT)	Turbine speed is equal to engine speed with lock-up ON.

WIRING DIAGRAM

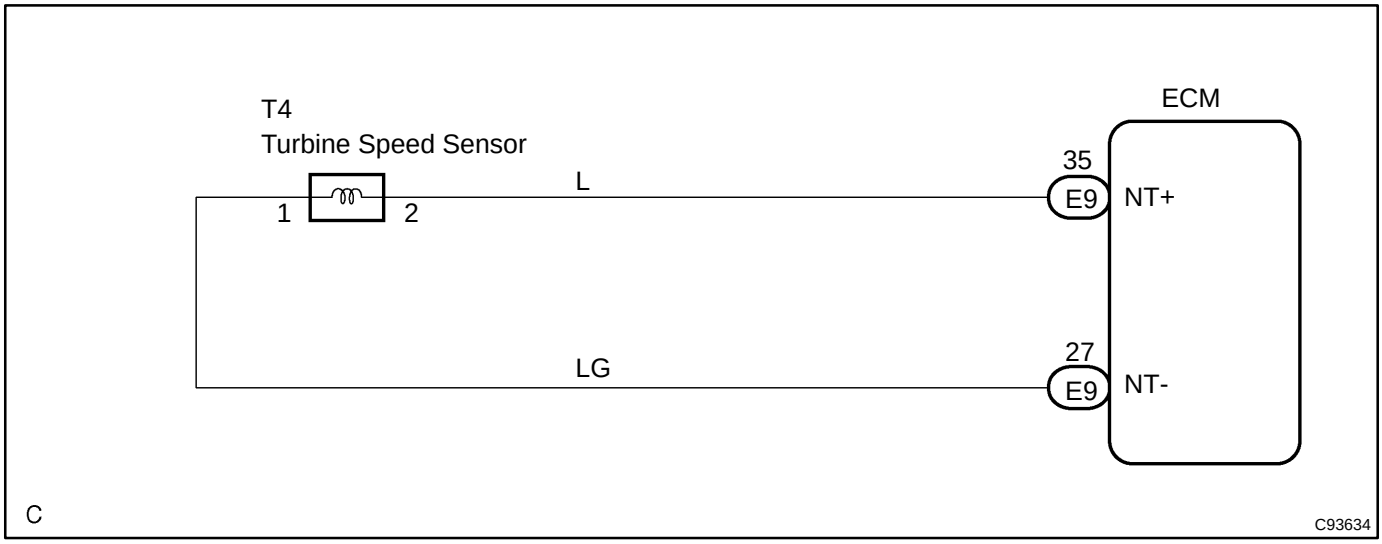

cardiagn.com

INSPECTION PROCEDURE

1 INSPECT SPEED SENSOR INSTALLATION

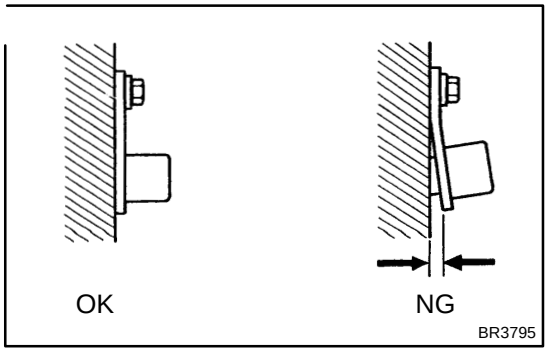

(a) Check the speed sensor installation.
Standard:
The installation bolt is tightened properly and there is no clearance between the sensor and transaxle case.

NG → **REPLACE SPEED SENSOR(NT)**

OK

2 INSPECT SPEED SENSOR(NT)

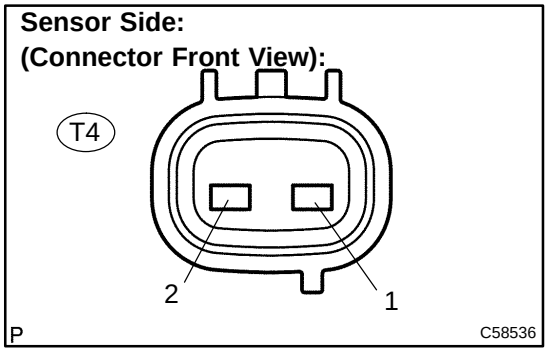

(a) Disconnect the speed sensor connector from the transaxle.
(b) Measure the resistance according to the value(s) in the table below.
Standard:

Tester Connection	Specified Condition 20 °C (68 °F)
1 - 2	560 to 680 Ω

NG → **REPLACE SPEED SENSOR(NT)**

OK

cardiagn.com

3 CHECK HARNESS AND CONNECTOR(SPEED SENSOR - ECM)

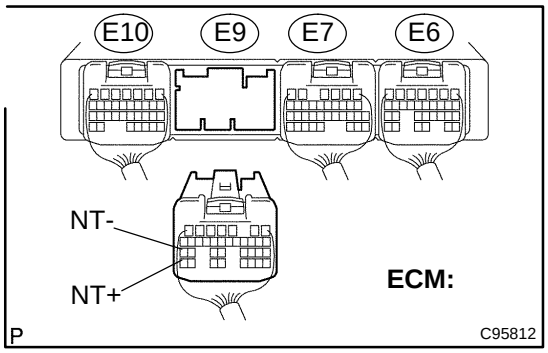

(a) Connect the speed sensor connector.

(b) Disconnect the ECM connector.

(c) Measure the resistance according to the value(s) in the table below.

Standard:

Tester Connection	Specified Condition 20°C (68°F)
E9 - 35 (NT+) - E9 - 27 (NT-)	560 to 680 Ω

(d) Measure the resistance according to the value(s) in the table below.

Standard (Check for short):

Tester Connection	Specified Condition
E9 - 35 (NT+) - Body ground	10 kΩ or higher
E9 - 27 (NT-) - Body ground	↑

NG → **REPAIR OR REPLACE HARNESS OR CONNECTOR (SEE PAGE 01-32)**

OK

REPLACE ECM (SEE PAGE 10-9)

cardiagn.com

DTC P0724 BRAKE SWITCH ”B” CIRCUIT HIGH

CIRCUIT DESCRIPTION

The purpose of this circuit is to prevent the engine from stalling while driving in lock-up condition when brakes are suddenly applied.
When the brake pedal is depressed, this switch sends a signals to the ECM. Then the ECM cancels the operation of the lock-up clutch while braking is in progress.

DTC No.	DTC Detecting Condition	Trouble Area
P0724	The stop light switch always remains ON even when the vehicle is driven in a GO (30 km/h) and STOP (3 km/h) fashion 5 times. (2-trip detection logic).	★Short in stop light switch signal circuit ★Stop light switch ★ECM

MONITOR DESCRIPTION

When the stop light switch remains ON during ”stop and go” driving, the ECM interprets this as a fault in the stop light switch and the MIL comes on and the ECM stores the DTC. The vehicle must stop and go (3 km/h (2 mph) to 30 km/h (19 mph)) 5 times for two driving cycles in order to detect a malfunction.

MONITOR STRATEGY

Related DTCs	P0724: Stop light switch/Rationality
Required sensors/Components	Stop light switch, Vehicle speed sensor
Frequency of operation	Continuous
Duration	GO and STOP 5 times
MIL operation	2 driving cycles
Sequence of operation	None

TYPICAL ENABLING CONDITIONS

The monitor will run whenever this DTC is not present.	See page 05-1125
Ignition switch	ON
Starter	OFF
Battery voltage	8 V or more
GO (Vehicle speed is 18.63 mph (30 km/h) or more)	Once
STOP (Vehicle speed is less than 1.86 mph (3 km/h))	Once

TYPICAL MALFUNCTION THRESHOLDS

Brake switch	Remain ON during GO and STOP 5 times

cardiagn.com

WIRING DIAGRAM

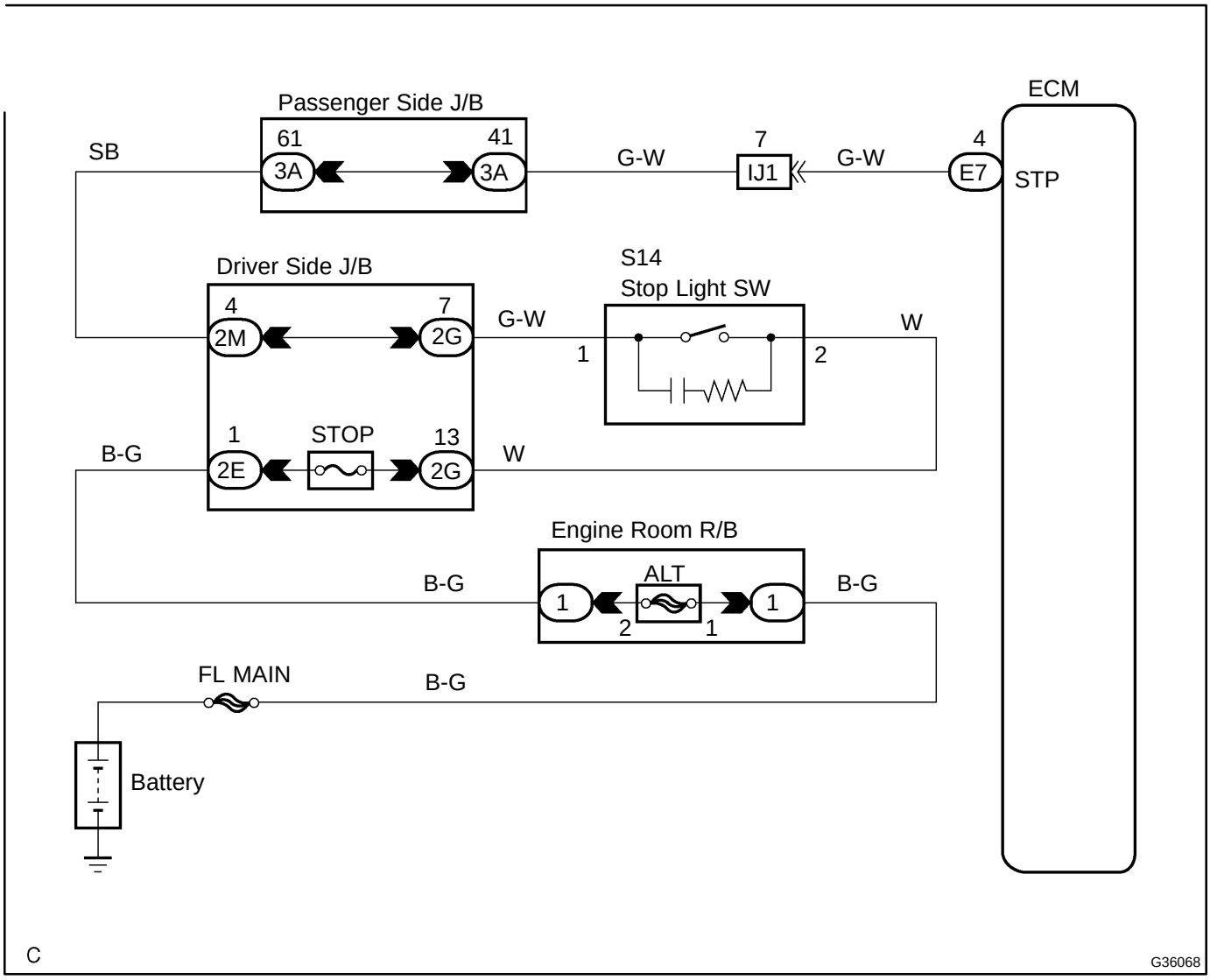

cardiagn.com

INSPECTION PROCEDURE

HINT:

According to the DATA LIST displayed by the OBD II scan tool or hand-held tester, you can read the value of the switch, sensor, actuator and so on without parts removal. Reading the DATA LIST as the first step of troubleshooting is one method to shorten labor time.

(a) Warm up the engine.
(b) Turn the ignition switch off.
(c) Connect the OBD II scan tool or hand-held tester to the DLC3.
(d) Turn the ignition switch to the ON position.
(e) Push the ”ON” button of the OBD II scan tool or the hand-held tester.
(f) When you use hand-held tester:
Select the item ”DIAGNOSIS/ENHANCED OBD II/DATA LIST”.
(g) According to the display on the tester, read the ”DATA LIST”.

Item	Measurement Item/ Range (display)	Normal Condition
STOP LIGHT SW	Stop light SW Status/ ON or OFF	★Brake pedal is depressed: ON ★Brake pedal is released: OFF

1 INSPECT STOP LAMP SWITCH ASSY

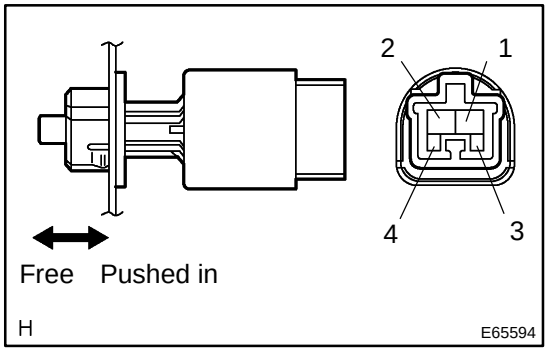

(a) Remove the stop lamp switch assy.
(b) Measure the resistance according to the value(s) in the table below.
Standard:

Switch position	Tester Connection	Specified Condition
Switch pin free	1 - 2	Below 1 Ω
Switch pin pushed in	↑	10 kΩ or higher
Switch pin free	3 - 4	10 kΩ or higher
Switch pin pushed in	↑	Below 1 Ω

NG → **REPLACE STOP LAMP SWITCH ASSY**

OK

2 CHECK HARNESS AND CONNECTOR(STOP LAMP SWITCH ASSY - ECM)

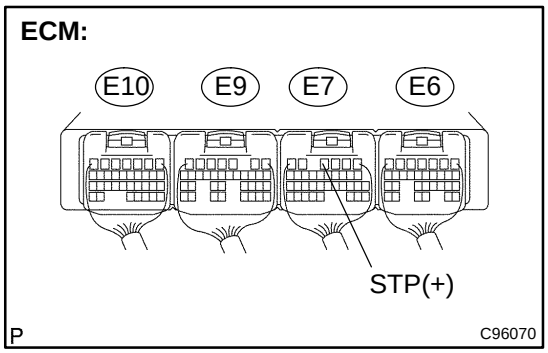

(a) Install the stop lamp switch assy connector.
(b) Measure the voltage according to the value(s) in the table below when the brake pedal is depressed and released.
Standard:

Condition	Tester Connection	Specified Condition
Brake pedal is depressed	E7 - 4 (STP) - Body ground	10 to 14 V
Brake pedal is released	↑	Below 1 V

NG → **REPAIR OR REPLACE HARNESS OR CONNECTOR (SEE PAGE 01-32)**

OK

REPLACE ECM (SEE PAGE 10-9)

cardiagn.com

DTC	P0741	TORQUE CONVERTER CLUTCH SOLENOID PERFORMANCE (SHIFT SOLENOID VALVE DSL)

SYSTEM DESCRIPTION

The ECM uses the signals from the throttle position sensor, air-flow meter, turbine (input) speed sensor, intermediate (counter) shaft speed sensor and crankshaft position sensor to monitor the engagement condition of the lock-up clutch.
Then the ECM compares the engagement condition of the lock-up clutch with the lock-up schedule in the ECM memory to detect mechanical problems of the shift solenoid valve DSL, valve body and torque converter clutch.

DTC No.	DTC Detection Condition	Trouble Area
P0741	Lock-up does not occur when driving in lock-up range Lock-up remains ON in lock-up OFF range (2-trip detection logic)	★Shift solenoid valve DSL remains open or closed ★Valve body is blocked ★Shift solenoid valve DSL ★Torque converter clutch ★Automatic transaxle (clutch, brake or gear etc.) ★Line pressure is too low ★ECM

MONITOR DESCRIPTION

Torque converter lock-up is controlled by the ECM based on the speed sensor (NT), speed sensor (NC), engine rpm, engine load, engine temperature, vehicle speed, transmission temperature, and gear selection. The ECM determines the lock-up status of the torque converter by comparing the engine rpm (NE) to the input turbine rpm (NT). The ECM calculates the actual transmission gear by comparing input turbine rpm (NT) to counter gear rpm (NC). When conditions are appropriate, the ECM requests ”lock-up” by applying control voltage to the shift solenoid DSL. When the DSL is turned on, it applies pressure to the lock-up relay valve and locks the torque converter clutch.
If the ECM detects no lock-up after lock-up has been requested or if it detects lock-up when it is not requested, the ECM interprets this as a fault in the shift solenoid valve DSL or lock-up system performance. The ECM will turn on the MIL and store the DTC.
Example:
When any of the following is met, the system judges it as a malfunction.

(a) There is a difference in rotation between the input side (engine speed) and output side (input turbine speed) of the torque converter when the ECM commands lock-up.
(Engine speed is at least 75 rpm greater than input turbine speed.)

(b) There is no difference in rotation between the input side (engine speed) and output side (input turbine speed) of the torque converter when the ECM commands lock-up off.
(The difference between engine speed and input turbine speed is less than 35 rpm.)

cardiagn.com

MONITOR STRATEGY

Related DTCs	P0741: Shift solenoid valve DSL/OFF malfunction Shift solenoid valve DSL/ON malfunction
Required sensors/Components	Shift solenoid valve DSL, Speed sensor (NT), Speed sensor (NC), Crankshaft position sensor (NE), Throttle position sensor (VPA1), Mass air flow sensor (MAF), Transmission temperature sensor (THO1), Engine coolant temperature sensor (ECT)
Frequency of operation	Continuous
Duration	OFF malfunction 3.5 sec. ON malfunction 1.8 sec.
MIL operation	2 driving cycles
Sequence of operation	None

TYPICAL ENABLING CONDITIONS

ALL:

ECT (Engine coolant temperature)	10°C (50°F) or more
Transmission range	”D”
TFT (Transmission fluid temperature)	-20 °C (-4°F) or more
TFT sensor circuit	Not circuit malfunction
ECT sensor circuit	Not circuit malfunction
Turbine speed sensor circuit	Not circuit malfunction
Intermediate shaft speed sensor circuit	Not circuit malfunction
Output speed sensor circuit	Not circuit malfunction
Shift solenoid valve SL1 circuit	Not circuit malfunction
Shift solenoid valve SL2 circuit	Not circuit malfunction
Shift solenoid valve SL3 circuit	Not circuit malfunction
Shift solenoid valve S4 circuit	Not circuit malfunction
Shift solenoid valve SR circuit	Not circuit malfunction
Shift solenoid valve DSL circuit	Not circuit malfunction
Electronic throttle system	Not circuit malfunction

OFF malfunction:

ECM lock-up command	ON
ECM selected gear	3rd, 4th or 5th
Vehicle speed	25 km/h (15.5 mph) or more

ON malfunction:

ECM lock-up command	OFF
ECM selected gear	3rd, 4th or 5th
Throttle valve opening angle	8.5% or more
Vehicle speed	25 to 60 km/h (15.5 to 37.3 mph)

TYPICAL MALFUNCTION THRESHOLDS

Either of the following conditions is met: OFF malfunction or ON malfunction

OFF malfunction:

Engine speed - Input (turbine) speed	100 rpm or more

ON malfunction:

Diffierence between engine speed and input (turbine) speed	Less than 35 rpm

cardiagn.com

INSPECTION PROCEDURE

HINT:

Performing the ACTIVE TEST using the hand-held tester allows the relay, VSV, actuator and so on to operate without parts removal. Performing the ACTIVE TEST as the first step of troubleshooting is one method to shorten labor time.

It is possible to display the DATA LIST during the ACTIVE TEST.

(a) Warm up the engine.
(b) Turn the ignition switch off.
(c) Connect the hand-held tester to the DLC3.
(d) Turn the ignition switch to the ON position.
(e) Push the ”ON” button of the hand-held tester.
(f) When you use hand-held tester:
Select the item ”DIAGNOSIS/ENHANCED OBD II/ACTIVE TEST”.
(g) According to the display on the tester, perform the ”ACTIVE TEST”.

Item	Test Details	Diagnostic Note
LOCK UP	[Test Details] Control the shift solenoid DSL to set the automatic transaxle to the lock-up condition. [Vehicle Condition] Vehicle Speed: 60 km/h (37 mph) or more	Possible to check the DSL operation.

HINT:

★ This test can be conducted when the vehicle speed is 60 km/h (37 mph) or more.
★ This test can be conducted in the 5th gear.

(h) Lightly depress the accelerator pedal and check that the engine speed does not change abruptly.

HINT:

★ When changing the accelerator pedal opening angle while driving, if the engine speed does not change, lock-up is on.
★ Slowly release, but not fully, the accelerator pedal in order to decelerate. (Fully releasing the pedal will close the throttle valve and lock-up may be turned off.)

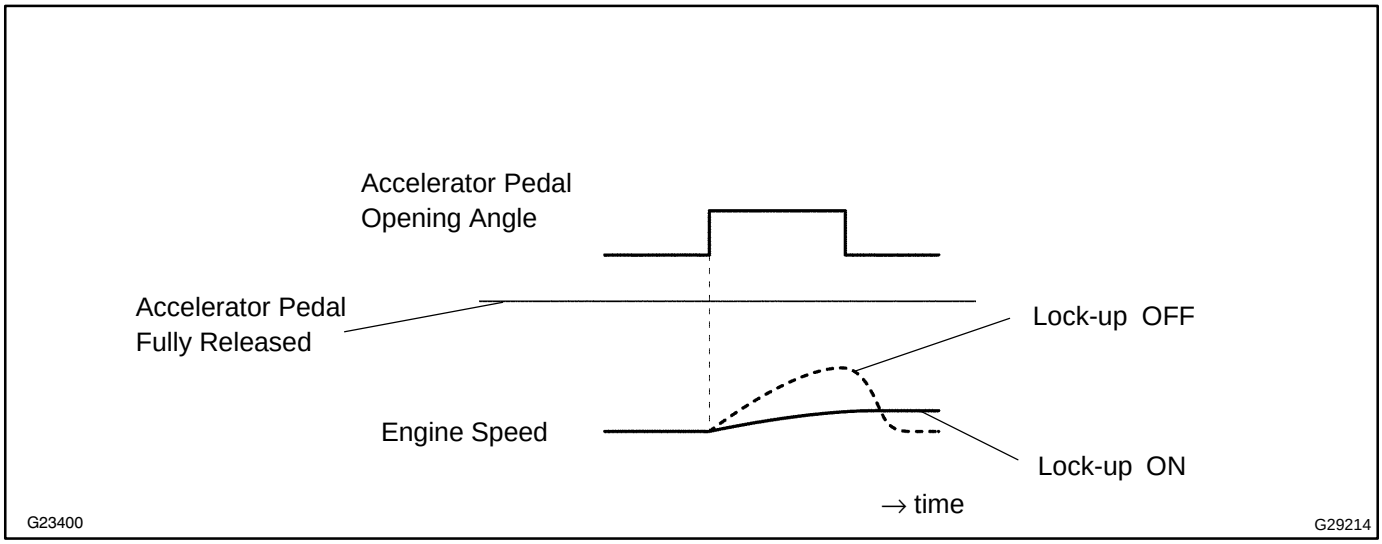

cardiagn.com

1 CHECK OTHER DTCS OUTPUT(IN ADDITION TO DTC P0741)

(a) Connect the OBD II scan tool or the hand-held tester to the DLC3.
(b) Turn the ignition switch to the ON position and turn the OBD II scan tool or the hand-held tester main switch ON.
(c) When you use hand-held tester:
Select the item ”DIAGNOSIS/ENHANCED OBD II/DTC INFO/CURRENT CODES”.
(d) Read the DTCs using the OBD II scan tool or the hand-held tester.

Result:

Display (DTC output)	Proceed to
Only ”P0741” is output	A
”P0741” and other DTCs	B

HINT:
If any other codes besides ”P0741” are output, perform the troubleshooting for those DTCs first.

B → **GO TO RELEVANT DTC CHART (SEE PAGE 05-1 152)**

A

2 INSPECT TRANSMISSION WIRE(DSL)

Transmission Wire Side: (Connector Front View):

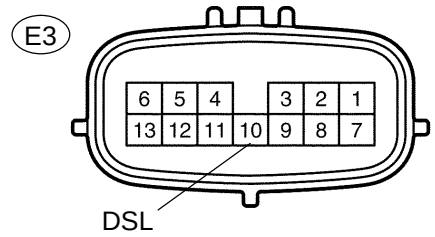

(a) Disconnect the transmission wire connector from the transaxle.
(b) Measure the resistance according to the value(s) in the table below.

Standard:

Tester Connection	Specified Condition 20°C (68°F)
10 - Body ground	11 to 13 Ω

NG → **Go to step 4**

OK

3 CHECK HARNESS AND CONNECTOR(TRANSMISSION WIRE - ECM)

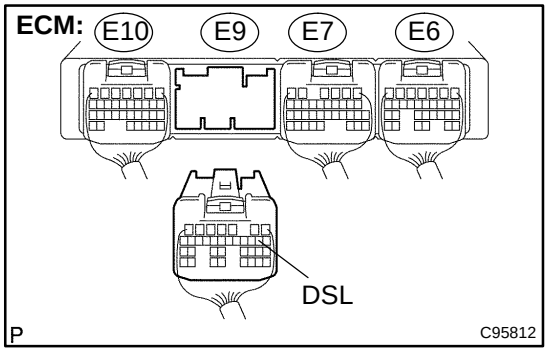

(a) Connect the transmission wire connector.
(b) Disconnect the ECM connector.
(c) Measure the resistance according to the value(s) in the table below.

Standard:

Tester Connection	Specified Condition 20°C (68°F)
E9 - 9 (DSL) - Body ground	11 to 13 Ω

NG → **REPAIR OR REPLACE HARNESS OR CONNECTOR (SEE PAGE 01-32)**

OK

cardiagn.com

4	INSPECT SHIFT SOLENOID VALVE(DSL)

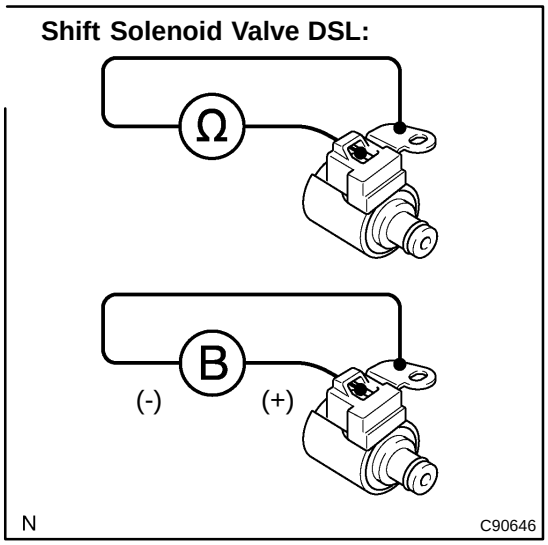

(a) Remove the shift solenoid valve DSL.

(b) Measure the resistance according to the value(s) in the table below.

Standard:

Tester Connection	Specified Condition 20°C (68°F)
Solenoid Connector (DSL) - Solenoid Body (DSL)	11 to 13 Ω

(c) Connect the positive (+) lead to the terminal of the solenoid connector, and the negative (-) lead to the solenoid body.

Standard:

The solenoid valve makes an operating noise.

NG → **REPLACE SHIFT SOLENOID VALVE(DSL)**

OK

5	CHECK TRANSMISSION WIRE (SEE PAGE 01-32)

NG → **REPAIR OR REPLACE TRANSMISSION WIRE (SEE PAGE 40-34)**

OK

6	INSPECT TRANSMISSION VALVE BODY ASSY (See chapter 2 in the problem symptoms table) (SEE PAGE 05-1 134)

NG → **REPAIR OR REPLACE TRANSMISSION VALVE BODY ASSY (SEE PAGE 40-42)**

OK

7	INSPECT TORQUE CONVERTER CLUTCH ASSY (SEE PAGE 40-27)

NG → **REPLACE TORQUE CONVERTER CLUTCH ASSY**

OK

REPAIR AUTOMATIC TRANSAXLE ASSY (SEE PAGE 40-17)

cardiagn.com

DTC	P0746	PRESSURE CONTROL SOLENOID ”A” PERFORMANCE (SHIFT SOLENOID VALVE SL1)

SYSTEM DESCRIPTION

The ECM uses signals from the vehicle speed sensor to detect the actual gear position (1st, 2nd, 3rd, 4th or 5th gear).
Then the ECM compares the actual gear with the shift schedule in the ECM memory to detect mechanical problems of the shift solenoid valves and valve body.

DTC No.	DTC Detecting Condition	Trouble Area
P0746	The gear required by the ECM does not match the actual gear when driving (2-trip detection logic)	★Shift solenoid valve SL1 remains open or closed ★Valve body is blocked ★Shift solenoid valve SL1 ★Automatic transaxle (clutch, brake or gear etc.) ★ECM

The ECM commands gear shifts by turning the shift solenoid valves ”ON/OFF”. According to the input shaft revolution, intermediate (counter) shaft revolution and output shaft revolution, the ECM detects the actual gear position (1st, 2nd, 3rd, 4th or 5th gear position). When the gear position commanded by the ECM and the actual gear position are not the same, the ECM illuminates the MIL.

MONITOR DESCRIPTION

The ECM commands gear shifts by turning the shift solenoid valves ”ON/OFF”. According to the input shaft revolution, intermediate (counter) shaft revolution and output shaft revolution, the ECM detects the actual gear position (1st, 2nd, 3rd, 4th or 5th gear position). When the gear position commanded by the ECM and the actual gear position are not same, the ECM illuminates the MIL.
Example:
When either condition (a) or (b) is met, the ECM detects a malfunction.
(a) The ECM commands the 1st gear, but the actual gear is 2nd.
(b) The ECM commands the 2nd gear, but the actual gear is 1st.

MONITOR STRATEGY

Related DTCs	P0746: Shift solenoid valve SL1/OFF malfunction Shift solenoid valve SL1/ON malfunction
Required sensors/Components	Shift solenoid valve SL1, Speed sensor (NT), Speed sensor (NC), Crankshaft position sensor (NE)
Frequency of operation	Continuous
Duration	0.8 sec.
MIL operation	2 driving cycles
Sequence of operation	None

cardiagn.com

TYPICAL ENABLING CONDITIONS

ALL:

ECT (Engine coolant temperature)	10°C (50°F) or more
Transmission range	”D”
TFT (Transmission fluid temperature)	-20 °C (-4°F) or more
TFT sensor circuit	Not circuit malfunction
ECT sensor circuit	Not circuit malfunction
Turbine speed sensor circuit	Not circuit malfunction
Intermediate shaft speed sensor circuit	Not circuit malfunction
Output speed sensor circuit	Not circuit malfunction
Shift solenoid valve SL1 circuit	Not circuit malfunction
Shift solenoid valve SL2 circuit	Not circuit malfunction
Shift solenoid valve SL3 circuit	Not circuit malfunction
Shift solenoid valve S4 circuit	Not circuit malfunction
Shift solenoid valve SR circuit	Not circuit malfunction
Shift solenoid valve DSL circuit	Not circuit malfunction
Electronic throttle system	Not circuit malfunction

OFF malfunction:

ECM selected gear	1st
Vehicle speed	Less than 40 km/h (24.9 mph)
Throttle valve opening angle	4.5% or more (Varies with engine speed)

ON malfunction:

ECM selected gear	2nd
Throttle valve opening angle	4.5% or more (Varies with engine speed)

TYPICAL MALFUNCTION THRESHOLDS

Either of the following conditions is met: OFF malfunction or ON malfunction

OFF malfunction:

2 detections are necessary per driving cycle:

1st detection; temporary flag ON

2nd detection; pending fault code ON

Input (turbine) speed/Intermediate shaft speed	1.49 to 1.63

ON malfunction:

Input (turbine) speed/Intermediate shaft speed	2.72 to 2.86

cardiagn.com

INSPECTION PROCEDURE

HINT:

Performing the ACTIVE TEST using the hand-held tester allows the relay, VSV, actuator and so on to operate without parts removal. Performing the ACTIVE TEST as the first step of troubleshooting is one method to shorten labor time.

It is possible to display the DATA LIST during the ACTIVE TEST.

(a) Warm up the engine.
(b) Turn the ignition switch off.
(c) Connect the hand-held tester to the DLC3.
(d) Turn the ignition switch to the ON position.
(e) Push the ”ON” button of the hand-held tester.
(f) Select the item ”DIAGNOSIS/ENHANCED OBD II/ACTIVE TEST/SHIFT”.
(g) According to the display on the tester, perform the ”ACTIVE TEST”.

HINT:

While driving, the shift position can be forcibly changed with the hand-held tester.

Comparing the shift position commanded by the ACTIVE TEST with the actual shift position enables you to confirm the problem (see page 05-1 148).

Item	Test Details	Diagnostic Note
SHIFT	[Test Details] Operate the shift solenoid valve and set the each shift position by yourself. [Vehicle Condition] Less than 50 km/h (31 mph) [Others] ★Press ”→” button: Shift up ★Press ”←” button: Shift down	Possible to check the operation of the shift solenoid valves.

HINT:

★ This test can be conducted when the vehicle speed is 50 km/h (31 mph) or less.
★ The shift position commanded by the ECM is shown in the DATA LIST display on the hand-held tester.

1 CHECK OTHER DTCS OUTPUT(IN ADDITION TO DTC P0746)

(a) Connect the OBD II scan tool or the hand-held tester to the DLC3.
(b) Turn the ignition switch to the ON position and turn the OBD II scan tool or the hand-held tester main switch ON.
(c) When you use hand-held tester:
Select the item ”DIAGNOSIS/ENHANCED OBD II/DTC INFO/CURRENT CODES”.
(d) Read the DTCs using the OBD II scan tool or the hand-held tester.

Result:

Display (DTC output)	Proceed to
Only ”P0746” is output	A
”P0746” and other DTCs	B

HINT:

If any other codes besides ”P0746” are output, perform the troubleshooting for those DTCs first.

B → **GO TO RELEVANT DTC CHART (SEE PAGE 05-1 152)**

A

cardiagn.com

2 INSPECT SHIFT SOLENOID VALVE(SL1)

Shift Solenoid Valve SL1:

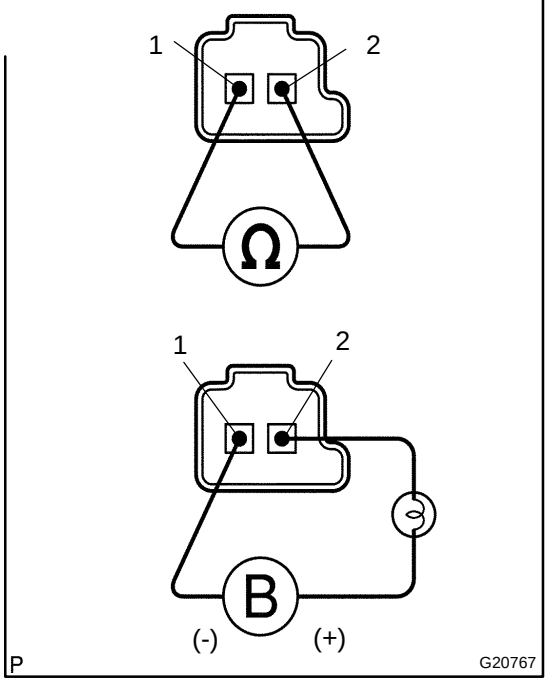

(a) Remove the shift solenoid valve SL1.

(b) Measure the resistance according to the value(s) in the table below.

Standard:

Tester Connection	Specified Condition 20°C (68°F)
1 - 2	5.0 to 5.6 Ω

(c) Connect the positive (+) lead with a 21 W bulb to terminal 2 and the negative (-) lead to terminal 1 of the solenoid valve connector, then check the movement of the valve.

Standard:

The solenoid makes an operating noise.

NG → **REPLACE SHIFT SOLENOID VALVE(SL1)**

OK

3 INSPECT TRANSMISSION VALVE BODY ASSY (See chapter 2 in the problem symptoms table) (SEE PAGE 05-1 134)

NG → **REPAIR OR REPLACE TRANSMISSION VALVE BODY ASSY (SEE PAGE 40-42)**

OK

4 INSPECT TORQUE CONVERTER CLUTCH ASSY (SEE PAGE 40-27)

NG → **REPLACE TORQUE CONVERTER CLUTCH ASSY**

OK

REPAIR OR REPLACE AUTOMATIC TRANSAXLE ASSY (SEE PAGE 40-17)

cardiagn.com

DTC	P0748	PRESSURE CONTROL SOLENOID ”A” ELECTRICAL (SHIFT SOLENOID VALVE SL1)

05C10-15

CIRCUIT DESCRIPTION

Shifting from 1st to 5th is performed in combination with ”ON” and ”OFF” operation of the shift solenoid valves SL1, SL2, SL3, S4 and SR which are controlled by the ECM. If an open or short circuit occurs in either of the shift solenoid valves, the ECM controls the remaining normal shift solenoid valves to allow the vehicle to be operated smoothly (Fail safe function).

DTC No.	DTC Detection Condition	Trouble Area
P0748	ECM checks for an open or short circuit in shift solenoid valves SL1 (1-trip detection logic) ★Hybrid IC for solenoid indicates fail (Except PZEV) ★Output signal duty equals to 100% (PZEV)	★Open or short in shift solenoid valve SL1 circuit ★Shift solenoid valve SL1 ★ECM

MONITOR DESCRIPTION

The ECM commands gear shifts by turning the shift solenoid valves ”ON/OFF”. When there is an open or short circuit in any shift solenoid valve circuit, the ECM detects the problem and illuminates the MIL and stores the DTC. And the ECM performs the fail-safe function and turns the other normal shift solenoid valves ”ON/OFF” (In case of an open or short circuit, the ECM stops sending current to the circuit.)
(see page 05-1 148).

MONITOR STRATEGY

Related DTCs	P0748: Shift solenoid valve SL1/Range check
Required sensors/Components	Shift solenoid valve SL1
Frequency of operation	Continuous
Duration	1 sec.
MIL operation	Immediate
Sequence of operation	None

TYPICAL ENABLING CONDITIONS

Except PZEV:

The monitor will run whenever this DTC is not present.	See page 05-1125
Solenoid current cut status	Not cut
CPU commanded duty ratio to SL1	19% or more
Battery voltage	11 V or more
Ignition switch	ON
Starter	OFF

PZEV:

The monitor will run whenever this DTC is not present.	See page 05-1125
Battery voltage	10 V or more
CPU commanded duty ratio to SL1	Less than 75%
Ignition switch	ON
Starter	OFF

TYPICAL MALFUNCTION THRESHOLDS

Except PZEV:

Solenoid status from IC	Fail (Open or short)

PZEV:

Output signal duty	100%

cardiagn.com

COMPONENT OPERATING RANGE

Output signal duty	Less than 100%

WIRING DIAGRAM

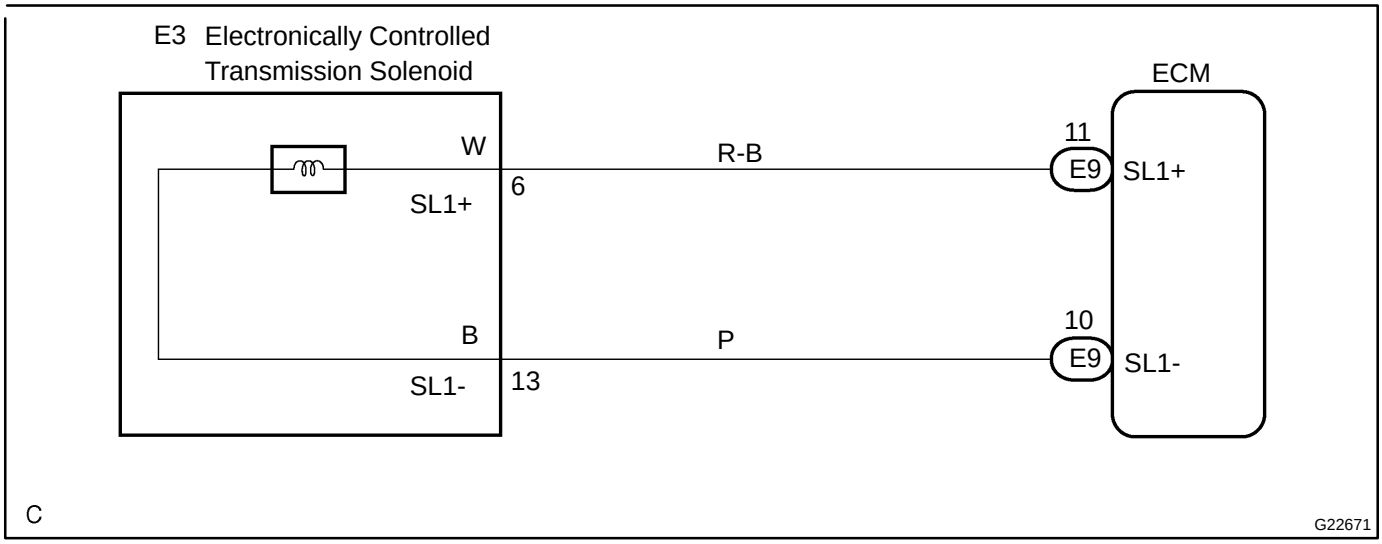

INSPECTION PROCEDURE

1	INSPECT TRANSMISSION WIRE(SL1)

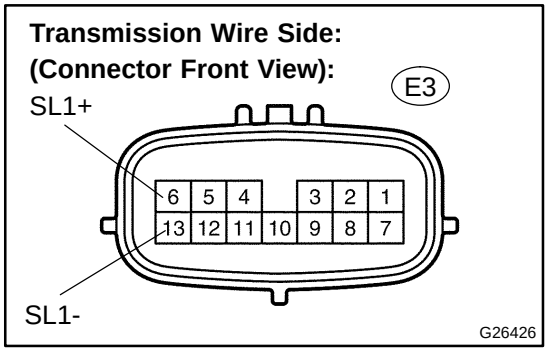

(a) Disconnect the transmission wire connector from the transaxle.

(b) Measure the resistance according to the value(s) in the table below.

Standard:

Tester Connection	Specified Condition 20°C (68°F)
6 (SL1+) - 13 (SL1-)	5.0 to 5.6 Ω

(c) Measure the resistance according to the value(s) in the table below.

Standard (Check for short):

Tester Connection	Specified Condition
SL1+ - Body ground	10 kΩ or higher
SL1- - Body ground	↑

NG → **Go to step 3**

OK

cardiagn.com

2 CHECK HARNESS AND CONNECTOR(TRANSMISSION WIRE - ECM)

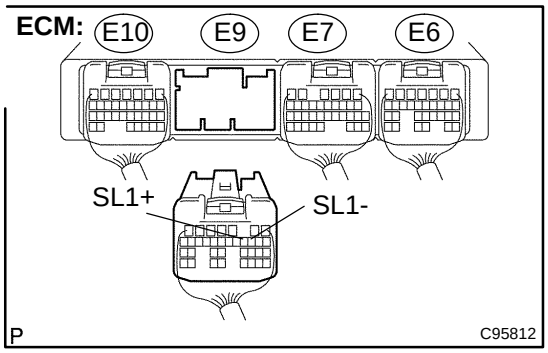

(a) Connect the transmission connector to the transaxle.
(b) Disconnect the connector from the ECM.
(c) Measure the resistance according to the value(s) in the table below.
Standard:

Tester Connection	Specified Condition 20°C (68°F)
E9 - 11 (SL1+) - E9 - 10 (SL1-)	5.0 to 5.6 Ω

(d) Measure the resistance according to the value(s) in the table below.
Standard (Check for short):

Tester Connection	Specified Condition
E9 - 11 (SL1+) - Body ground	10 kΩ or higher
E9 - 10 (SL1-) - Body ground	↑

NG → **REPAIR OR REPLACE HARNESS OR CONNECTOR (SEE PAGE 01-32)**

OK

REPLACE ECM (SEE PAGE 10-9)

3 INSPECT SHIFT SOLENOID VALVE(SL1)

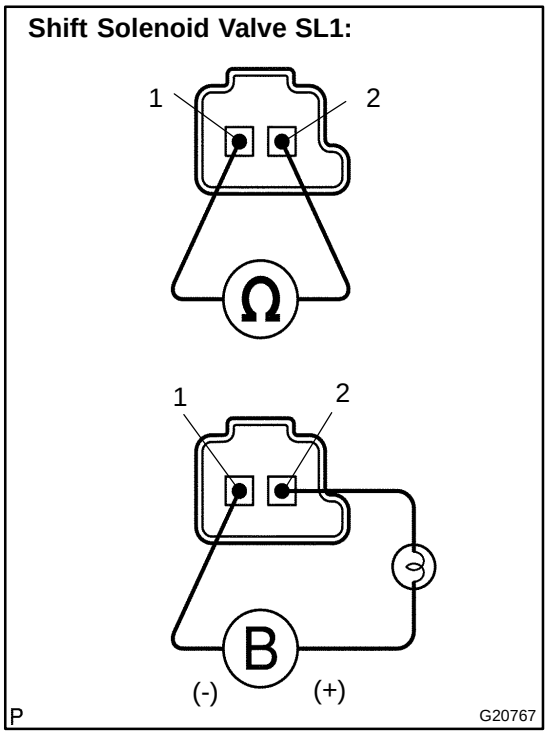

(a) Remove the shift solenoid valve SL1.
(b) Measure the resistance according to the value(s) in the table below.
Standard:

Tester Connection	Specified Condition 20°C (68°F)
1 - 2	5.0 to 5.6 Ω

(c) Connect the positive (+) lead with a 21 W bulb to terminal 2 and the negative (-) lead to terminal 1 of the solenoid valve connector, then check the movement of the valve.
Standard:
The solenoid makes an operating noise.

NG → **REPLACE SHIFT SOLENOID VALVE(SL1)**

OK

REPAIR OR REPLACE TRANSMISSION WIRE (SEE PAGE 40-34)

cardiagn.com

DTC	P0766	SHIFT SOLENOID ”D” PERFORMANCE (SHIFT SOLENOID VALVE S4)

SYSTEM DESCRIPTION

The ECM uses signals from the vehicle speed sensor to detect the actual gear position (1st, 2nd, 3rd, 4th or 5th gear).
Then the ECM compares the actual gear with the shift schedule in the ECM memory to detect mechanical problems of the shift solenoid valves and valve body.

DTC No.	DTC Detecting Condition	Trouble Area
P0766	The gear required by the ECM does not match the actual gear when driving (2-trip detection logic)	★Shift solenoid valve S4 remains open or closed ★Valve body is blocked ★Shift solenoid valve S4 ★Automatic transaxle (clutch, brake or gear etc.) ★ECM

MONITOR DESCRIPTION

The ECM commands gear shifts by turning the shift solenoid valves ”ON/OFF”. According to the input shaft revolution, intermediate (counter) shaft revolution and output shaft revolution, the ECM detects the actual gear position (1st, 2nd, 3rd, 4th or 5th gear position). When the gear position commanded by the ECM and the actual gear position are not the same, the ECM illuminates the MIL and stores the DTC.

MONITOR STRATEGY

Related DTCs	P0766: Shift solenoid valve S4/OFF malfunction Shift solenoid valve S4/ON malfunction
Required sensors/Components	Shift solenoid valve S4, Speed sensor (NT), Speed sensor (NC), Crankshaft position sensor (NE)
Frequency of operation	Continuous
Duration	OFF malfunction (A) and ON malfunction (B) 1 sec. OFF malfunction (B) 1.2 sec. ON malfunction (A) 0.8 sec.
MIL operation	2 driving cycles
Sequence of operation	None

cardiagn.com

TYPICAL ENABLING CONDITIONS

All:

ECT (Engine coolant temperature)	10°C (50°F) or more
Transmission range	”D”
TFT (Transmission fluid temperature)	-20 °C (-4°F) or more
TFT sensor circuit	Not circuit malfunction
ECT sensor circuit	Not circuit malfunction
Turbine speed sensor circuit	Not circuit malfunction
Intermediate shaft speed sensor circuit	Not circuit malfunction
Output speed sensor circuit	Not circuit malfunction
Shift solenoid valve SL1 circuit	Not circuit malfunction
Shift solenoid valve SL2 circuit	Not circuit malfunction
Shift solenoid valve SL3 circuit	Not circuit malfunction
Shift solenoid valve S4 circuit	Not circuit malfunction
Shift solenoid valve SR circuit	Not circuit malfunction
Shift solenoid valve DSL circuit	Not circuit malfunction
Electronic throttle system	Not circuit malfunction

OFF malfunction (A):

ECM selected gear	5th
Throttle valve opening angle	5% or more
Vehicle speed	10 km/h (6.2 mph) or more

OFF malfunction (B):

ECM lock-up command	ON
ECM selected gear	3rd, 4th or 5th
Throttle valve opening angle	10% or more
Vehicle speed	25 to 100 km/h (15.5 to 62.1 mph)

ON malfunction (A):

ECM selected gear	4th or 5th
Throttle valve opening angle	4.5% or more (Varies with engine speed)

ON malfunction (B):

ECM selected gear	4th
Throttle valve opening angle	5% or more
Vehicle speed	10 km/h (6.2 mph) or more

cardiagn.com

TYPICAL MALFUNCTION THRESHOLDS

Either of the following conditions is met:

OFF malfunction (A) and (B), or ON malfunction (A) and (B)

2 detections are necessary per driving cycle:

1st detection; temporary flag ON

2nd detection; pending fault code ON

OFF malfunction (A):

Intermediate shaft speed/Output speed	1.34 to 1.48

OFF malfunction (B):

Difference between engine speed and input (turbine) speed	Less than 35 rpm

ON malfunction (A):

Input (turbine) speed/Intermediate shaft speed	0.64 to 0.74

ON malfunction (B):

Intermediate shaft speed/Output speed	0.95 to 1.09

INSPECTION PROCEDURE

HINT:

Performing the ACTIVE TEST using the hand-held tester allows the relay, VSV, actuator and so on to operate without parts removal. Performing the ACTIVE TEST as the first step of troubleshooting is one method to shorten labor time.

It is possible to display the DATA LIST during the ACTIVE TEST.

(a) Warm up the engine.

(b) Turn the ignition switch off.

(c) Connect the hand-held tester to the DLC3.

(d) Turn the ignition switch to the ON position.

(e) Push the ”ON” button of the hand-held tester.

(f) Select the item ”DIAGNOSIS/ENHANCED OBD II/ACTIVE TEST/SHIFT”.

(g) According to the display on the tester, perform the ”ACTIVE TEST”.

HINT:

While driving, the shift position can be forcibly changed with the hand-held tester.

Comparing the shift position commanded by the ACTIVE TEST with the actual shift position enables you to confirm the problem (see page 05-1 148).

Item	Test Details	Diagnostic Note
SHIFT	[Test Details] Operate the shift solenoid valve and set the each shift position by yourself. [Vehicle Condition] Less than 50 km/h (31 mph) [Others] ★Press ”→” button: Shift up ★Press ”←” button: Shift down	Possible to check the operation of the shift solenoid valves.

HINT:

★ This test can be conducted when the vehicle speed is 50 km/h (31 mph) or less.

★ The shift position commanded by the ECM is shown in the DATA LIST display on the hand-held tester.

cardiagn.com

1 CHECK OTHER DTCS OUTPUT(IN ADDITION TO DTC P0766)

(a) Connect the OBD II scan tool or the hand-held tester to the DLC3.
(b) Turn the ignition switch to the ON position and turn the OBD II scan tool or the hand-held tester main switch ON.
(c) When you use hand-held tester:
Select the item ”DIAGNOSIS/ENHANCED OBD II/DTC INFO/CURRENT CODES”.
(d) Read the DTCs using the OBD II scan tool or the hand-held tester.

Result:

Display (DTC output)	Proceed to
Only ”P0766” is output	A
”P0766” and other DTCs	B

HINT:
If any other codes besides ”P0766” are output, perform the troubleshooting for those DTCs first.

B → **GO TO RELEVANT DTC CHART (SEE PAGE 05-1 152)**

A

2 INSPECT SHIFT SOLENOID VALVE(S4)

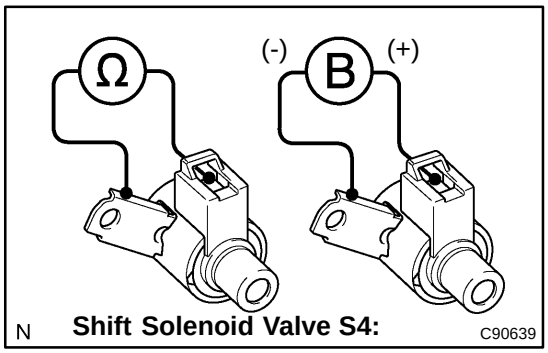

(a) Remove the shift solenoid valve S4.
(b) Measure the resistance according to the value(s) in the table below.
Standard:

Tester Connection	Specified Condition 20°C (68°F)
Solenoid Connector (S4) - Solenoid Body (S4)	11 to 15 Ω

(c) Connect the positive (+) lead to the terminal of the solenoid connector, and the negative (-) lead to the solenoid body.
Standard:
The solenoid makes an operating noise.

NG → **REPLACE SHIFT SOLENOID VALVE(S4)**

OK

3 INSPECT TRANSMISSION VALVE BODY ASSY (See chapter 2 in the problem symptoms table) (SEE PAGE 05-1 134)

NG → **REPAIR OR REPLACE TRANSMISSION VALVE BODY ASSY (SEE PAGE 40-42)**

OK

cardiagn.com

4	INSPECT TORQUE CONVERTER CLUTCH ASSY (SEE PAGE 40-27)

NG → REPLACE TORQUE CONVERTER CLUTCH ASSY

OK

REPAIR OR REPLACE AUTOMATIC TRANSAXLE ASSY (SEE PAGE 40-17)

cardiagn.com

DTC	P0771	SHIFT SOLENOID ”E” PERFORMANCE (SHIFT SOLENOID VALVE SR)

SYSTEM DESCRIPTION

The ECM uses signals from the vehicle speed sensor to detect the actual gear position (1st, 2nd, 3rd, 4th or 5th gear).
Then the ECM compares the actual gear with the shift schedule in the ECM memory to detect mechanical problems of the shift solenoid valves and valve body.

DTC No.	DTC Detecting Condition	Trouble Area
P0771	The gear required by the ECM does not match the actual gear when driving (2-trip detection logic)	★Shift solenoid valve SR remains open or closed ★Valve body is blocked ★Shift solenoid valve SR ★Automatic transaxle (clutch, brake or gear etc.) ★ECM

MONITOR DESCRIPTION

The ECM commands gear shifts by turning the shift solenoid valves ”ON/OFF”. According to the input shaft revolution, intermediate (counter) shaft revolution and output shaft revolution, the ECM detects the actual gear position (1st, 2nd, 3rd, 4th or 5th gear position). When the gear position commanded by the ECM and the actual gear position are not the same, the ECM illuminates the MIL and stores the DTC.

MONITOR STRATEGY

Related DTCs	P0771: Shift solenoid valve SR/OFF malfunction Shift solenoid valve SR/ON malfunction
Required sensors/Components	Shift solenoid valve SR, Speed sensor (NT), Speed sensor (NC), Crankshaft position sensor (NE)
Frequency of operation	Continuous
Duration	OFF malfunction (A) 1 sec. OFF malfunction (B) 3.5 sec. ON malfunction (A) Continuous ON malfunction (B) and (C) 0.8 sec.
MIL operation	2 driving cycles
Sequence of operation	None

cardiagn.com

TYPICAL ENABLING CONDITIONS

All:

ECT (Engine coolant temperature)	10°C (50°F) or more
Transmission range	”D”
TFT (Transmission fluid temperature)	-20 °C (-4°F) or more
TFT sensor circuit	Not circuit malfunction
ECT sensor circuit	Not circuit malfunction
Turbine speed sensor circuit	Not circuit malfunction
Intermediate shaft speed sensor circuit	Not circuit malfunction
Output speed sensor circuit	Not circuit malfunction
Shift solenoid valve SL1 circuit	Not circuit malfunction
Shift solenoid valve SL2 circuit	Not circuit malfunction
Shift solenoid valve SL3 circuit	Not circuit malfunction
Shift solenoid valve S4 circuit	Not circuit malfunction
Shift solenoid valve SR circuit	Not circuit malfunction
Shift solenoid valve DSL circuit	Not circuit malfunction
Electronic throttle system	Not circuit malfunction

OFF malfunction (A):

ECM selected gear	5th
Throttle valve opening angle	5% or more
Vehicle speed	10 km/h (6.2 mph) or more

OFF malfunction (B):

ECM lock-up command	ON
ECM selected gear	3rd, 4th or 5th
Vehicle speed	25 km/h (15.5 mph) or more

ON malfunction (A):

ECM lock-up command	OFF

ON malfunction (B):

ECM selected gear	1st
Vehicle speed	Less than 40 km/h (24.9 mph)
Throttle valve opening angle	4.5% or more (Varies with engine speed)

ON malfunction (C):

ECM selected gear	3rd
Throttle valve opening angle	4.5% or more (Varies with engine speed)

ON malfunction (D):

Duration time from shift command of ECM	15 sec. or more
ECM selected gear	4th or 5th

cardiagn.com

TYPICAL MALFUNCTION THRESHOLDS

Either of the following conditions is met:

OFF malfunction (A) and (B), or ON malfunction (A), (B), (C) and (D)

OFF malfunction (A):

Intermediate shaft speed/Output speed	1.34 to 1.48

OFF malfunction (B):

Engine speed - Input (turbine) speed	75 rpm or more

ON malfunction (A):

Difference between engine speed and input (turbine) speed	150 rpm or more

ON malfunction (B):

Input (turbine) speed/Intermediate shaft speed	0.93 to 1.07

ON malfunction (C):

Input (turbine) speed/Intermediate shaft speed	0.93 to 1.07

ON malfunction (D):

Input (turbine) speed/Intermediate shaft speed	0.64 to 0.74

INSPECTION PROCEDURE

HINT:

Performing the ACTIVE TEST using the hand-held tester allows the relay, VSV, actuator and so on to operate without parts removal. Performing the ACTIVE TEST as the first step of troubleshooting is one method to shorten labor time.

It is possible to display the DATA LIST during the ACTIVE TEST.

(a) Warm up the engine.
(b) Turn the ignition switch off.
(c) Connect the hand-held tester to the DLC3.
(d) Turn the ignition switch to the ON position.
(e) Push the ”ON” button of the hand-held tester.
(f) Select the item ”DIAGNOSIS/ENHANCED OBD II/ACTIVE TEST/SHIFT”.
(g) According to the display on the tester, perform the ”ACTIVE TEST”.

HINT:

While driving, the shift position can be forcibly changed with the hand-held tester.

Comparing the shift position commanded by the ACTIVE TEST with the actual shift position enables you to confirm the problem (see page 05-1 148).

Item	Test Details	Diagnostic Note
SHIFT	[Test Details] Operate the shift solenoid valve and set each shift position by yourself. [Vehicle Condition] Less than 50 km/h (31 mph) [Others] ★Press ”→” button: Shift up ★Press ”←” button: Shift down	Possible to check the operation of the shift solenoid valves.

HINT:

★ This test can be conducted when the vehicle speed is 50 km/h (31 mph) or less.
★ The shift position commanded by the ECM is shown in the DATA LIST display on the hand-held tester.

cardiagn.com

1 CHECK OTHER DTCS OUTPUT(IN ADDITION TO DTC P0771)

(a) Connect the OBD II scan tool or the hand-held tester to the DLC3.
(b) Turn the ignition switch to the ON position and turn the OBD II scan tool or the hand-held tester main switch ON.
(c) When you use hand-held tester:
Select the item ”DIAGNOSIS/ENHANCED OBD II/DTC INFO/CURRENT CODES”.
(d) Read the DTCs using the OBD II scan tool or the hand-held tester.

Result:

Display (DTC output)	Proceed to
Only ”P0771” is output	A
”P0771” and other DTCs	B

HINT:
If any other codes besides ”P0771” are output, perform the troubleshooting for those DTCs first.

B → **GO TO RELEVANT DTC CHART (SEE PAGE 05-1 152)**

A

2 INSPECT SHIFT SOLENOID VALVE(SR)

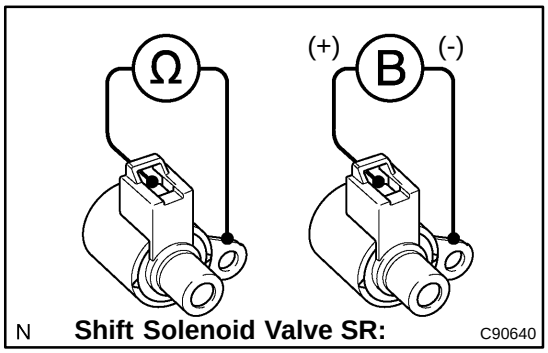

(a) Remove the shift solenoid valve SR.
(b) Measure the resistance according to the value(s) in the table below.
Standard:

Tester Connection	Specified Condition 20°C (68°F)
Solenoid Connector (SR) - Solenoid Body (SR)	11 to 15 Ω

(c) Connect the positive (+) lead to the terminal of the solenoid connector, and the negative (-) lead to the solenoid body.
Standard:
The solenoid makes an operating noise.

NG → **REPLACE SHIFT SOLENOID VALVE(SR)**

OK

3 INSPECT TRANSMISSION VALVE BODY ASSY (See chapter 2 in the problem symptoms table) (SEE PAGE 05-1 134)

NG → **REPAIR OR REPLACE TRANSMISSION VALVE BODY ASSY (SEE PAGE 40-42)**

OK

cardiagn.com

4	INSPECT TORQUE CONVERTER CLUTCH ASSY (SEE PAGE 40-27)

NG → REPLACE TORQUE CONVERTER CLUTCH ASSY

OK

REPAIR OR REPLACE AUTOMATIC TRANSAXLE ASSY (SEE PAGE 40-17)

cardiagn.com

DTC	P0776	PRESSURE CONTROL SOLENOID ”B” PERFORMANCE (SHIFT SOLENOID VALVE SL2)

SYSTEM DESCRIPTION

The ECM uses signals from the vehicle speed sensor to detect the actual gear position (1st, 2nd, 3rd, 4th or 5th gear).
Then the ECM compares the actual gear with the shift schedule in the ECM memory to detect mechanical problems of the shift solenoid valves and valve body.

DTC No.	DTC Detecting Condition	Trouble Area
P0776	The gear required by the ECM does not match the actual gear when driving (2-trip detection logic)	★Shift solenoid valve SL2 remains open or closed ★Valve body is blocked ★Shift solenoid valve SL2 ★Automatic transaxle (clutch, brake or gear etc.) ★ECM

MONITOR DESCRIPTION

The ECM commands gear shifts by turning the shift solenoid valves ”ON/OFF”. According to the input shaft revolution, intermediate (counter) shaft revolution and output shaft revolution, the ECM detects the actual gear position (1st, 2nd, 3rd, 4th or 5th gear position). When the gear position commanded by the ECM and the actual gear position are not the same, the ECM illuminates the MIL and stores the DTC.

MONITOR STRATEGY

Related DTCs	P0776: Shift solenoid valve SL2/OFF malfunction Shift solenoid valve SL2/ON malfunction
Required sensors/Components	Shift solenoid valve SL2, Speed sensor (NT), Speed sensor (NC), Crankshaft position sensor (NE)
Frequency of operation	Continuous
Duration	OFF malfunction (A) 1.8 sec. OFF malfunction (B) and (C) 0.8 sec. ON malfunction (A) and (B) 0.8 sec. ON malfunction (C) 0.4 sec.
MIL operation	2 driving cycles
Sequence of operation	None

cardiagn.com

TYPICAL ENABLING CONDITIONS

All:

ECT (Engine coolant temperature)	10°C (50°F) or more
Transmission range	”D”
TFT (Transmission fluid temperature)	-20 °C (-4°F) or more
TFT sensor circuit	Not circuit malfunction
ECT sensor circuit	Not circuit malfunction
Turbine speed sensor circuit	Not circuit malfunction
Intermediate shaft speed sensor circuit	Not circuit malfunction
Output speed sensor circuit	Not circuit malfunction
Shift solenoid valve SL1 circuit	Not circuit malfunction
Shift solenoid valve SL2 circuit	Not circuit malfunction
Shift solenoid valve SL3 circuit	Not circuit malfunction
Shift solenoid valve S4 circuit	Not circuit malfunction
Shift solenoid valve SR circuit	Not circuit malfunction
Shift solenoid valve DSL circuit	Not circuit malfunction
Electronic throttle system	Not circuit malfunction

OFF malfunction (A):

ECM lock-up command	OFF
Vehicle speed	Less than 60 km/h (37.3 mph)
Throttle valve opening angle	8.5% or more

OFF malfunction (B):

ECM selected gear	1st
Vehicle speed	Less than 40 km/h (24.9 mph)
Throttle valve opening angle	4.5% or more (Varies with engine speed)

OFF malfunction (C):

ECM selected gear	3rd
Throttle valve opening angle	4.5% or more (Varies with engine speed)

OFF malfunction (D):

Duration time from shift command of ECM	15 sec. or more
ECM selected gear	4th or 5th

ON malfunction (A):

ECM selected gear	1st
Vehicle speed	Less than 40 km/h (24.9 mph)
Throttle valve opening angle	4.5% or more (Varies with engine speed)

ON malfunction (B):

ECM selected gear	3rd
Throttle valve opening angle	7.0% or more (Varies with engine speed)
Malfunction of pressure control solenoid ”B” (SL2) and ”C” (SL3)	Not detected

ON malfunction (C):

Throttle valve opening angle	7.0% or more (Varies with engine speed)
Malfunction of pressure control solenoid ”B” (SL2)	Not detected

cardiagn.com

TYPICAL MALFUNCTION THRESHOLDS

Either of the following conditions is met:
OFF malfunction (A), (B), (C) and (D), or ON malfunction (A), (B) and (C)

OFF malfunction (A):

Difference between engine speed and input (turbine) speed	Less than 35 rpm

OFF malfunction (B) and (C):

Input (turbine) speed/Intermediate shaft speed	0.93 to 1.07

OFF malfunction (D):

Input (turbine) speed/Intermediate shaft speed	0.64 to 0.74

ON malfunction (A):

Input (turbine) speed/Intermediate shaft speed	2.72 to 2.86

ON malfunction (B):

Input (turbine) speed - Intermediate shaft speed	700 rpm or more

ON malfunction (C):

Input (turbine) speed - Intermediate shaft speed	Less than -500 rpm or 700 rpm or more

INSPECTION PROCEDURE

HINT:
Performing the ACTIVE TEST using the hand-held tester allows the relay, VSV, actuator and so on to operate without parts removal. Performing the ACTIVE TEST as the first step of troubleshooting is one method to shorten labor time.
It is possible to display the DATA LIST during the ACTIVE TEST.
(a) Warm up the engine.
(b) Turn the ignition switch off.
(c) Connect the hand-held tester to the DLC3.
(d) Turn the ignition switch to the ON position.
(e) Push the ”ON” button of the hand-held tester.
(f) Select the item ”DIAGNOSIS/ENHANCED OBD II/ACTIVE TEST/SHIFT”.
(g) According to the display on the tester, perform the ”ACTIVE TEST”.
HINT:
While driving, the shift position can be forcibly changed with the hand-held tester.
Comparing the shift position commanded by the ACTIVE TEST with the actual shift position enables you to confirm the problem (see page 05-1 148).

Item	Test Details	Diagnostic Note
SHIFT	[Test Details] Operate the shift solenoid valve and set each shift position by yourself. [Vehicle Condition] Less than 50 km/h (31 mph) [Others] ★Press ”→” button: Shift up ★Press ”←” button: Shift down	Possible to check the operation of the shift solenoid valves.

HINT:
★ This test can be conducted when the vehicle speed is 50 km/h (31 mph) or less.
★ The shift position commanded by the ECM is shown in the DATA LIST display on the hand-held tester.

cardiagn.com

1 CHECK OTHER DTCS OUTPUT(IN ADDITION TO DTC P0776)

(a) Connect the OBD II scan tool or the hand-held tester to the DLC3.
(b) Turn the ignition switch to the ON position and turn the OBD II scan tool or the hand-held tester main switch ON.
(c) When you use hand-held tester:
Select the item ”DIAGNOSIS/ENHANCED OBD II/DTC INFO/CURRENT CODES”.
(d) Read the DTCs using the OBD II scan tool or the hand-held tester.

Result:

Display (DTC output)	Proceed to
Only ”P0776” is output	A
”P0776” and other DTCs	B

HINT:
If any other codes besides ”P0776” are output, perform the troubleshooting for those DTCs first.

B → **GO TO RELEVANT DTC CHART (SEE PAGE 05-1 152)**

A

2 INSPECT SHIFT SOLENOID VALVE(SL2)

Shift Solenoid Valve SL2:

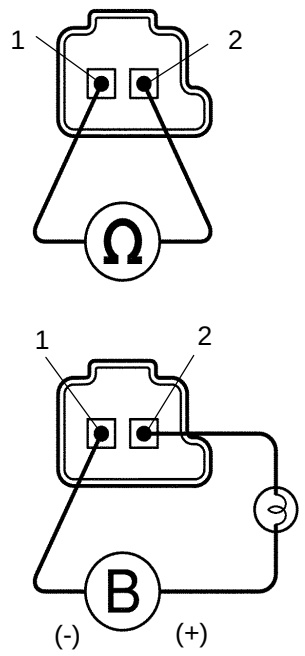

(a) Remove the shift solenoid valve SL2.
(b) Measure the resistance according to the value(s) in the table below.
Standard:

Tester Connection	Specified Condition 20°C (68°F)
1 - 2	5.0 to 5.6 Ω

(c) Connect the positive (+) lead with a 21 W bulb to terminal 2 and the negative (-) lead to terminal 1 of the solenoid valve connector, then check the movement of the valve.
Standard:
The solenoid makes an operating noise.

NG → **REPLACE SHIFT SOLENOID VALVE(SL2)**

OK

cardiagn.com

3	**INSPECT TRANSMISSION VALVE BODY ASSY (See chapter 2 in the problem symptoms table) (SEE PAGE 05-1 134)**

NG → **REPAIR OR REPLACE TRANSMISSION VALVE BODY ASSY (SEE PAGE 40-42)**

OK

4	**INSPECT TORQUE CONVERTER CLUTCH ASSY (SEE PAGE 40-27)**

NG → **REPLACE TORQUE CONVERTER CLUTCH ASSY**

OK

REPAIR OR REPLACE AUTOMATIC TRANSAXLE ASSY (SEE PAGE 40-17)

cardiagn.com

DTC	P0778	PRESSURE CONTROL SOLENOID ”B” ELECTRICAL (SHIFT SOLENOID VALVE SL2)

CIRCUIT DESCRIPTION

Shifting from 1st to 5th is performed in combination with ”ON” and ”OFF” operation of the shift solenoid valves SL1, SL2, SL3, S4 and SR which are controlled by the ECM. If an open or short circuit occurs in either of the shift solenoid valves, the ECM controls the remaining normal shift solenoid valves to allow the vehicle to be operated smoothly (Fail safe function).

DTC No.	DTC Detection Condition	Trouble Area
P0778	ECM checks for an open or short circuit in shift solenoid valves SL2 (1-trip detection logic) ★Hybrid IC for solenoid indicates fail (Except PZEV) ★Output signal duty equals to 100% (PZEV)	★Open or short in shift solenoid valve SL2 circuit ★Shift solenoid valve SL2 ★ECM

MONITOR DESCRIPTION

The ECM commands gear shifts by turning the shift solenoid valves ”ON/OFF”. When there is an open or short circuit in any shift solenoid valve circuit, the ECM detects the problem and illuminates the MIL and stores the DTC. And the ECM performs the fail-safe function and turns the other normal shift solenoid valves ”ON/OFF” (In case of an open or short circuit, the ECM stops sending current to the circuit.)
(see page 05-1 148).

MONITOR STRATEGY

Related DTCs	P0778: Shift solenoid valve SL2/Range check
Required sensors/Components	Shift solenoid valve SL2
Frequency of operation	Continuous
Duration	1 sec.
MIL operation	Immediate
Sequence of operation	None

TYPICAL ENABLING CONDITIONS

Except PZEV:

The monitor will run whenever this DTC is not present.	See page 05-1125
Solenoid current cut status	Not cut
CPU commanded duty ratio to SL2	19% or more
Battery voltage	11 V or more
Ignition switch	ON
Starter	OFF

PZEV:

The monitor will run whenever this DTC is not present.	See page 05-1125
Battery voltage	10 V or more
CPU commanded duty ratio to SL2	Less than 75%
Ignition switch	ON
Starter	OFF

cardiagn.com

TYPICAL MALFUNCTION THRESHOLDS

Except PZEV:

Solenoid status from IC	Fail (Open or short)

PZEV:

Output signal duty	100%

COMPONENT OPERATING RANGE

Output signal duty	Less than 100%

WIRING DIAGRAM

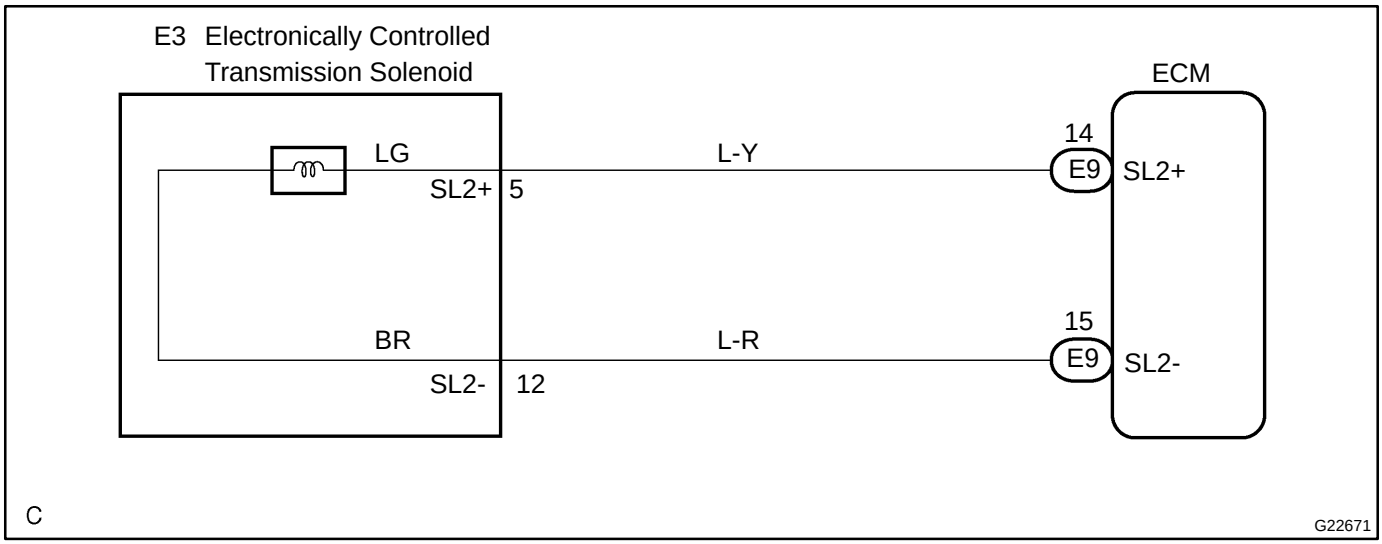

INSPECTION PROCEDURE

1	INSPECT TRANSMISSION WIRE(SL2)

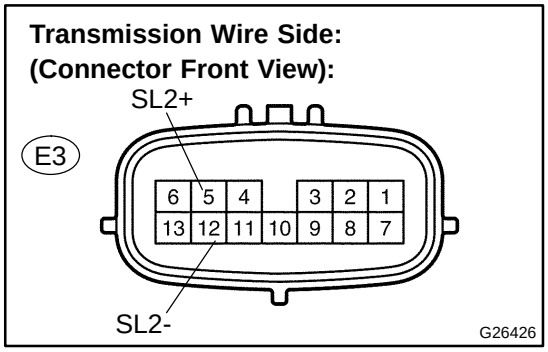

(a) Disconnect the transmission wire connector from the transaxle.

(b) Measure the resistance according to the value(s) in the table below.

Standard:

Tester Connection	Specified Condition 20°C (68°F)
5 (SL2+) - 12 (SL2-)	5.0 to 5.6 Ω

(c) Measure the resistance according to the value(s) in the table below.

OK:

Standard (Check for short):

Tester Connection	Specified Condition
5 (SL2+) - Body ground	10 kΩ or higher
12 (SL2-) - Body ground	↑

NG → **Go to step 3**

OK

cardiagn.com

2 CHECK HARNESS AND CONNECTOR(TRANSMISSION WIRE - ECM)

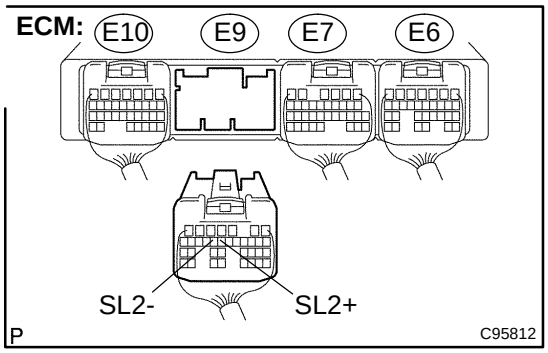

(a) Connect the transmission connector to the transaxle.
(b) Disconnect the connector from the ECM.
(c) Measure the resistance according to the value(s) in the table below.
Standard:

Tester Connection	Specified Condition 20°C (68°F)
E9 - 14 (SL2+) - E9 - 15 (SL2-)	5.0 to 5.6 Ω

(d) Measure the resistance according to the value(s) in the table below.
OK:
Standard (Check for short):

Tester Connection	Specified Condition
E9 - 14 (SL2+) - Body ground	10 kΩ or higher
E9 - 15 (SL2-) - Body ground	↑

NG → **REPAIR OR REPLACE HARNESS OR CONNECTOR (SEE PAGE 01-32)**

OK

REPLACE ECM (SEE PAGE 10-9)

3 INSPECT SHIFT SOLENOID VALVE(SL2)

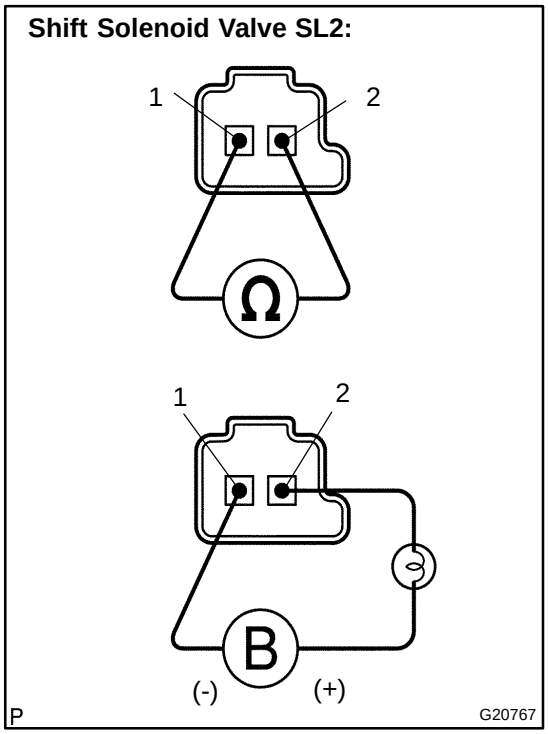

(a) Remove the shift solenoid valve SL2.
(b) Measure the resistance according to the value(s) in the table below.
Standard:

Tester Connection	Specified Condition 20°C (68°F)
1 - 2	5.0 to 5.6 Ω

(c) Connect the positive (+) lead with a 21 W bulb to terminal 2 and the negative (-) lead to terminal 1 of the solenoid valve connector, then check the movement of the valve.
Standard:
The solenoid makes an operating noise.

NG → **REPLACE SHIFT SOLENOID VALVE(SL2)**

OK

REPAIR OR REPLACE TRANSMISSION WIRE (SEE PAGE 40-34)

cardiagn.com

DTC	P0793	INTERMEDIATE SHAFT SPEED SENSOR "A"

CIRCUIT DESCRIPTION

This sensor detects the rotation speed of the counter gear. By comparing the counter gear speed signal (NC) with the direct clutch speed sensor signal (NT), the ECM detects the shift timing of the gears and appropriately controls the engine torque and hydraulic pressure according to various conditions. Thus smooth gear shifting is performed.

DTC No.	DTC Detection Condition	Trouble Area
P0793	ECM detects conditions (a), (b) and (c) continuously for 5 sec. or more: (1-trip detection logic) (a) Vehicle speed: 50 km/h (31 mph) or more (b) Park/neutral position switch (NSW) is OFF (c) Speed sensor (NC): less than 300 rpm	★Open or short in transmission revolution sensor NC (speed sensor NC) circuit ★Transmission revolution sensor NC (speed sensor NC) ★ECM

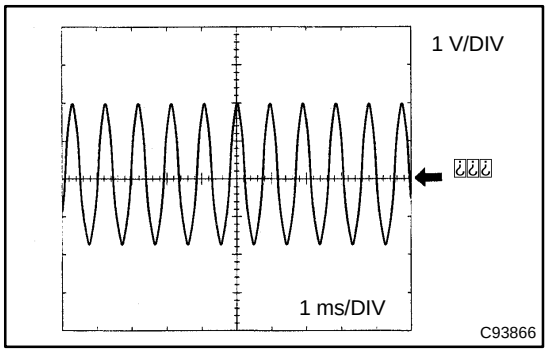

Reference (Using an oscilloscope):

Check the waveform between terminals NC+ and NC- of the ECM connector.

Standard: Refer to the illustration.

Terminal	NC+ - NC-
Tool setting	1V/DIV, 1ms/DIV
Vehicle condition	Vehicle speed 30 km/h (19 mph): (3rd gear) Engine speed 1,400 rpm

MONITOR DESCRIPTION

The NC terminal of the ECM detects the revolving signal from speed sensor (NC) (output rpm). The ECM outputs a gearshift signal comparing the speed sensor (NT) with the speed sensor (NC).

While the vehicle is operating in the 2nd, 3rd, 4th or 5th gear position in the shift position of D, if the counter gear revolution is less than 300 rpm*1 although the output shaft revolution is more than 1,000 rpm*2, the ECM detects the trouble, illuminates the MIL and stores the DTC.

*1: Pulse is not output or is irregularly output.

*2: The vehicle speed is 50 km/h (31 mph) or more.

MONITOR STRATEGY

Related DTCs	P0793: Speed sensor (NC)/Verify pulse input
Required sensors/Components	Speed sensor (NC), Speed sensor (NT), Park/neutral position switch
Frequency of operation	Continuous
Duration	5 sec.
MIL operation	Immediate
Sequence of operation	None

TYPICAL ENABLING CONDITIONS

The monitor will run whenever this DTC is not present.	See page 05-1125
Engine	Running
NSW switch	OFF
Output shaft rpm	1,000 rpm or more

cardiagn.com

TYPICAL MALFUNCTION THRESHOLDS

Sensor signal rpm	Less than 300 rpm

COMPONENT OPERATING RANGE

Counter gear speed sensor (NC)	[HINT] 3rd when shift lever position is D position (After warming up the engine); ★Intermediate shaft speed (NC) becomes close to the engine speed.

WIRING DIAGRAM

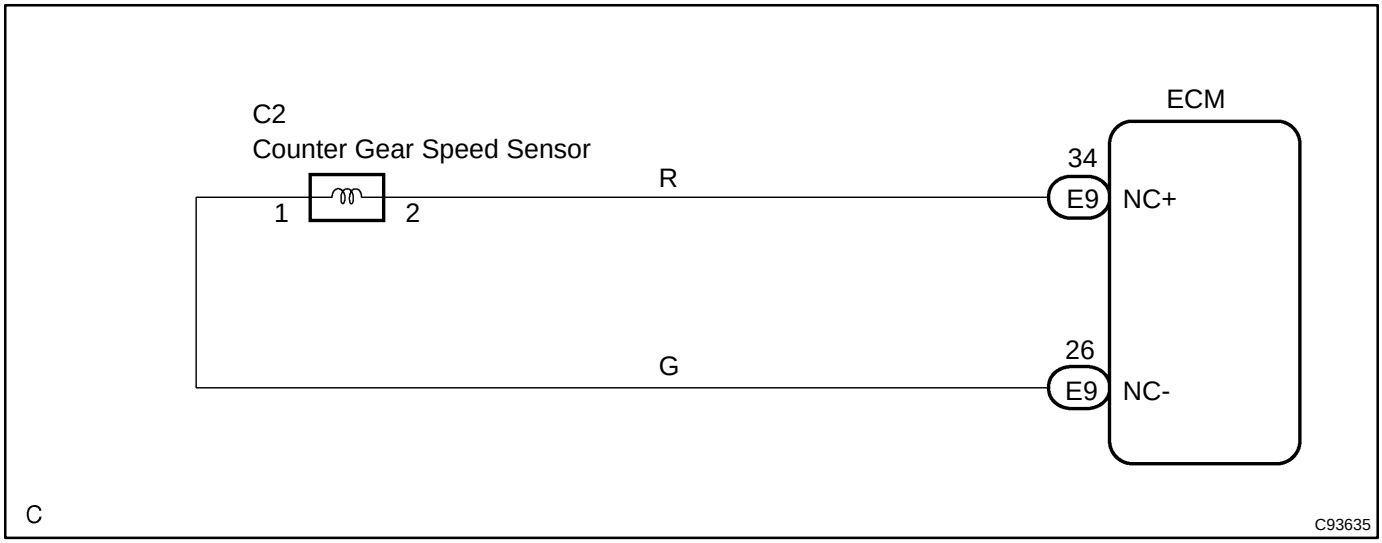

cardiagn.com

INSPECTION PROCEDURE

HINT:

According to the DATA LIST displayed by the OBD II scan tool or hand-held tester, you can read the value of the switch, sensor, actuator and so on without parts removal. Reading the DATA LIST as the first step of troubleshooting is one method to shorten labor time.

(a) Warm up the engine.
(b) Turn the ignition switch off.
(c) Connect the OBD II scan tool or hand-held tester to the DLC3.
(d) Turn the ignition switch to the ON position.
(e) Push the ”ON” button of the OBD II scan tool or the hand-held tester.
(f) When you use hand-held tester:
Select the item ”DIAGNOSIS/ENHANCED OBD II/DATA LIST”.
(g) According to the display on the tester, read the ”DATA LIST”.

Item	Measurement Item/ Range (display)	Normal Condition
SPD (NC)	Counter Gear Speed/ display: 50 r/min	[HINT] 3rd when shift lever position is D position (After warming up the engine); ★Intermediate shaft speed (NC) becomes close to the engine speed.

HINT:

★ SPD (NC) is always 0 while driving:
Open or short in the sensor or circuit.
★ SPD (NC) is always more than 0 and less than 300 rpm while driving the vehicle at 50 km/h (31 mph) or more:
Sensor trouble, improper installation, or intermittent connection trouble of the circuit.

1	INSPECT SPEED SENSOR INSTALLATION

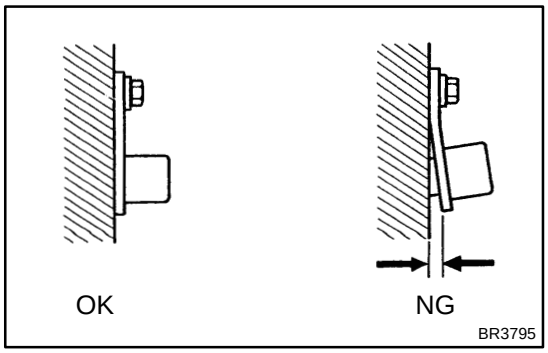

(a) Check the speed sensor installation.
Standard:
The installation bolt is tightened properly and there is no clearance between the sensor and transaxle case.

NG → **REPLACE SPEED SENSOR(NC)**

OK

cardiagn.com

2 INSPECT SPEED SENSOR(NC)

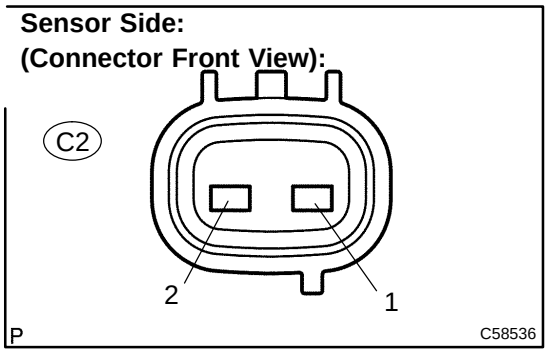

(a) Disconnect the speed sensor connector from the transaxle.

(b) Measure the resistance according to the value(s) in the table below.

Standard:

Tester Connection	Specified Condition 20 °C (68 °F)
1 - 2	560 to 680 Ω

NG → **REPLACE SPEED SENSOR(NC)**

OK

3 CHECK HARNESS AND CONNECTOR(SPEED SENSOR - ECM)

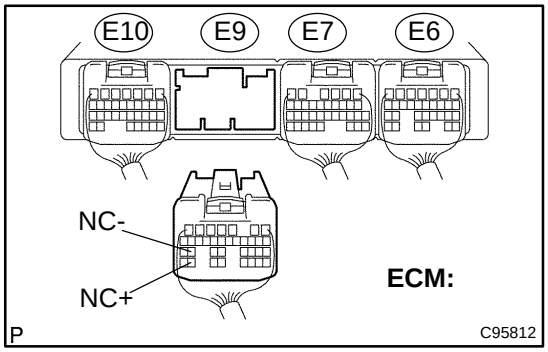

(a) Connect the speed sensor connector.

(b) Disconnect the ECM connector.

(c) Measure the resistance according to the value(s) in the table below.

Standard:

Tester Connection	Specified Condition 20 °C (68 °F)
E9 - 34 (NC+) - E9 - 26 (NC-)	560 to 680 Ω

(d) Measure the resistance according to the value(s) in the table below.

Standard (Check for short):

Tester Connection	Specified Condition
E9 - 34 (NC+) - Body ground	10 kΩ or higher
E9 - 26 (NC-) - Body ground	↑

NG → **REPAIR OR REPLACE HARNESS OR CONNECTOR (SEE PAGE 01-32)**

OK

REPLACE ECM (SEE PAGE 10-9)

cardiagn.com

DTC	P0796	PRESSURE CONTROL SOLENOID ”C” PERFORMANCE (SHIFT SOLENOID VALVE SL3)

SYSTEM DESCRIPTION

The ECM uses signals from the vehicle speed sensor to detect the actual gear position (1st, 2nd, 3rd, 4th or 5th gear).
Then the ECM compares the actual gear with the shift schedule in the ECM memory to detect mechanical troubles of the shift solenoid valves and valve body.

DTC No.	DTC Detecting Condition	Trouble Area
P0796	The gear required by the ECM does not match the actual gear when driving (2-trip detection logic)	★Shift solenoid valve SL3 remains open or closed ★Valve body is blocked ★Shift solenoid valve SL3 ★Automatic transaxle (clutch, brake or gear etc.) ★ECM

MONITOR DESCRIPTION

The ECM commands gear shifts by turning the shift solenoid valves ”ON/OFF”. According to the input shaft revolution, intermediate (counter) shaft revolution and output shaft revolution, the ECM detects the actual gear position (1st, 2nd, 3rd, 4th or 5th gear position). When the gear position commanded by the ECM and the actual gear position are not the same, the ECM illuminates the MIL and stores the DTC.

MONITOR STRATEGY

Related DTCs	P0796: Shift solenoid valve SL3/OFF malfunction Shift solenoid valve SL3/ON malfunction
Required sensors/Components	Shift solenoid valve SL3, Speed sensor (NT), Speed sensor (NC), Crankshaft position sensor (NE)
Frequency of operation	Continuous
Duration	OFF malfunction (A) 0.8 sec. OFF malfunction (B) 1 sec. ON malfunction (A) and (B) 0.8 sec. ON malfunction (C) 0.4 sec.
MIL operation	2 driving cycles
Sequence of operation	None

cardiagn.com

TYPICAL ENABLING CONDITIONS

All:

ECT (Engine coolant temperature)	10°C (50°F) or more
Transmission range	”D”
TFT (Transmission fluid temperature)	-20 °C (-4°F) or more
TFT sensor circuit	Not circuit malfunction
ECT sensor circuit	Not circuit malfunction
Turbine speed sensor circuit	Not circuit malfunction
Intermediate shaft speed sensor circuit	Not circuit malfunction
Output speed sensor circuit	Not circuit malfunction
Shift solenoid valve SL1 circuit	Not circuit malfunction
Shift solenoid valve SL2 circuit	Not circuit malfunction
Shift solenoid valve SL3 circuit	Not circuit malfunction
Shift solenoid valve S4 circuit	Not circuit malfunction
Shift solenoid valve SR circuit	Not circuit malfunction
Shift solenoid valve DSL circuit	Not circuit malfunction
Electronic throttle system	Not circuit malfunction

OFF malfunction (A):

ECM selected gear	4th or 5th
Throttle valve opening angle	4.5% or more (Varies with engine speed)

OFF malfunction (B):

ECM selected gear	4th
Throttle valve opening angle	5% or more
Vehicle speed	10 km/h (6.2 mph) or more

ON malfunction (A):

ECM selected gear	1st
Vehicle speed	Less than 40 km/h (24.9 mph)
Throttle valve opening angle	4.5% or more (Varies with engine speed)

ON malfunction (B):

ECM selected gear	3rd
Throttle valve opening angle	7.0% or more (Varies with engine speed)
Malfunction of pressure control solenoid ”B” (SL2) and ”C” (SL3)	Not detected

ON malfunction (C):

Throttle valve opening angle	7.0% or more (Varies with engine speed)
Malfunction of pressure control solenoid ”B” (SL2)	Not detected

cardiagn.com

TYPICAL MALFUNCTION THRESHOLDS

Either of the following conditions is met:

OFF malfunction (A) and (B), or ON malfunctions (A), (B) and (C)

2 detections are necessary per driving cycle:

1st detection; temporary flag ON

2nd detection; pending fault code ON

OFF malfunction (A):

Input (turbine) speed/Intermediate shaft speed	0.93 to 1.07

OFF malfunction (B):

Intermediate shaft speed/Output speed	0.95 to 1.09

ON malfunction (A):

Input (turbine) speed/Intermediate shaft speed	0.93 to 1.07

ON malfunction (B):

Input (turbine) speed - Intermediate shaft speed	700 rpm or more

ON malfunction (C):

Input (turbine) speed - Intermediate shaft speed	Less than -500 rpm or 700 rpm or more

INSPECTION PROCEDURE

HINT:

Performing the ACTIVE TEST using the hand-held tester allows the relay, VSV, actuator and so on to operate without parts removal. Performing the ACTIVE TEST as the first step of troubleshooting is one method to shorten labor time.

It is possible to display the DATA LIST during the ACTIVE TEST.

(a) Warm up the engine.

(b) Turn the ignition switch off.

(c) Connect the hand-held tester to the DLC3.

(d) Turn the ignition switch to the ON position.

(e) Push the ”ON” button of the hand-held tester.

(f) Select the item ”DIAGNOSIS/ENHANCED OBD II/ACTIVE TEST/SHIFT”.

(g) According to the display on the tester, perform the ”ACTIVE TEST”.

HINT:

While driving, the shift position can be forcibly changed with the hand-held tester.

Comparing the shift position commanded by the ACTIVE TEST with the actual shift position enables you to confirm the problem (see page 05-1 148).

Item	Test Details	Diagnostic Note
SHIFT	[Test Details] Operate the shift solenoid valve and set each shift position by yourself. [Vehicle Condition] Less than 50 km/h (31 mph) [Others] ★Press ”→” button: Shift up ★Press ”←” button: Shift down	Possible to check the operation of the shift solenoid valves.

HINT:

★ This test can be conducted when the vehicle speed is 50 km/h (31 mph) or less.

★ The shift position commanded by the ECM is shown in the DATA LIST display on the hand-held tester.

cardiagn.com

1 CHECK OTHER DTCS OUTPUT(IN ADDITION TO DTC P0796)

(a) Connect the OBD II scan tool or the hand-held tester to the DLC3.
(b) Turn the ignition switch to the ON position and turn the OBD II scan tool or the hand-held tester main switch ON.
(c) When you use hand-held tester:
Select the item ”DIAGNOSIS/ENHANCED OBD II/DTC INFO/CURRENT CODES”.
(d) Read the DTCs using the OBD II scan tool or the hand-held tester.

Result:

Display (DTC output)	Proceed to
Only ”P0796” is output	A
”P0796” and other DTCs	B

HINT:
If any other codes besides ”P0796” are output, perform the troubleshooting for those DTCs first.

B → **GO TO RELEVANT DTC CHART (SEE PAGE 05-1 152)**

A

2 INSPECT SHIFT SOLENOID VALVE(SL3)

Shift Solenoid Valve SL3:

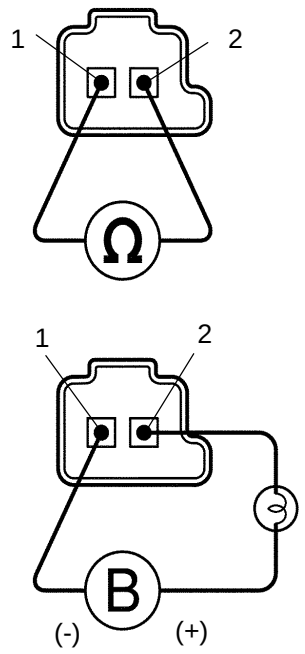

(a) Remove the shift solenoid valve SL3.
(b) Measure the resistance according to the value(s) in the table below.
Standard:

Tester Connection	Specified Condition 20°C (68°F)
1 - 2	5.0 to 5.6 Ω

(c) Connect the positive (+) lead with a 21 W bulb to terminal 2 and the negative (-) lead to terminal 1 of the solenoid valve connector, then check the movement of the valve.
Standard:
The solenoid makes an operating noise.

NG → **REPLACE SHIFT SOLENOID VALVE(SL3)**

OK

cardiagn.com

3	**INSPECT TRANSMISSION VALVE BODY ASSY (See chapter 2 in the problem symptoms table) (SEE PAGE 05-1 134)**

NG → **REPAIR OR REPLACE TRANSMISSION VALVE BODY ASSY (SEE PAGE 40-42)**

OK

4	**INSPECT TORQUE CONVERTER CLUTCH ASSY (SEE PAGE 40-27)**

NG → **REPLACE TORQUE CONVERTER CLUTCH ASSY**

OK

REPAIR OR REPLACE AUTOMATIC TRANSAXLE ASSY (SEE PAGE 40-17)

cardiagn.com

DTC	P0798	PRESSURE CONTROL SOLENOID ”C” ELECTRICAL (SHIFT SOLENOID VALVE SL3)

CIRCUIT DESCRIPTION

Shifting from 1st to 5th is performed in combination with ”ON” and ”OFF” operation of the shift solenoid valves SL1, SL2, SL3, S4 and SR which are controlled by the ECM. If an open or short circuit occurs in either of the shift solenoid valves, the ECM controls the remaining normal shift solenoid valves to allow the vehicle to be operated smoothly (Fail safe function).

DTC No.	DTC Detection Condition	Trouble Area
P0798	ECM checks for an open or short circuit in shift solenoid valves SL3 (1-trip detection logic) ★Hybrid IC for solenoid indicates fail (Except PZEV) ★Output signal duty equals to 100% (PZEV)	★Open or short in shift solenoid valve SL3 circuit ★Shift solenoid valve SL3 ★ECM

MONITOR DESCRIPTION

The ECM commands gear shifts by turning the shift solenoid valves ”ON/OFF”. When there is an open or short circuit in any shift solenoid valve circuit, the ECM detects the problem and illuminates the MIL and stores the DTC. And the ECM performs the fail-safe function and turns the other normal shift solenoid valves ”ON/OFF” (In case of an open or short circuit, the ECM stops sending current to the circuit.)
(see page 05-1 148).

MONITOR STRATEGY

Related DTCs	P0798: Shift solenoid valve SL3/Range check
Required sensors/Components	Shift solenoid valve SL3
Frequency of operation	Continuous
Duration	1 sec.
MIL operation	Immediate
Sequence of operation	None

TYPICAL ENABLING CONDITIONS

Except PZEV:

The monitor will run whenever this DTC is not present.	See page 05-1125
Solenoid current cut status	Not cut
CPU commanded duty ratio to SL3	19% or more
Battery voltage	11 V or more
Ignition switch	ON
Starter	OFF

PZEV:

The monitor will run whenever this DTC is not present.	See page 05-1125
Battery voltage	10 V or more
Ignition switch	ON
Starter	OFF

TYPICAL MALFUNCTION THRESHOLDS

Except PZEV:

Solenoid status from IC	Fail (Open or short)

PZEV:

Output signal duty	100%

cardiagn.com

COMPONENT OPERATING RANGE

Output signal duty	Less than 100%

WIRING DIAGRAM

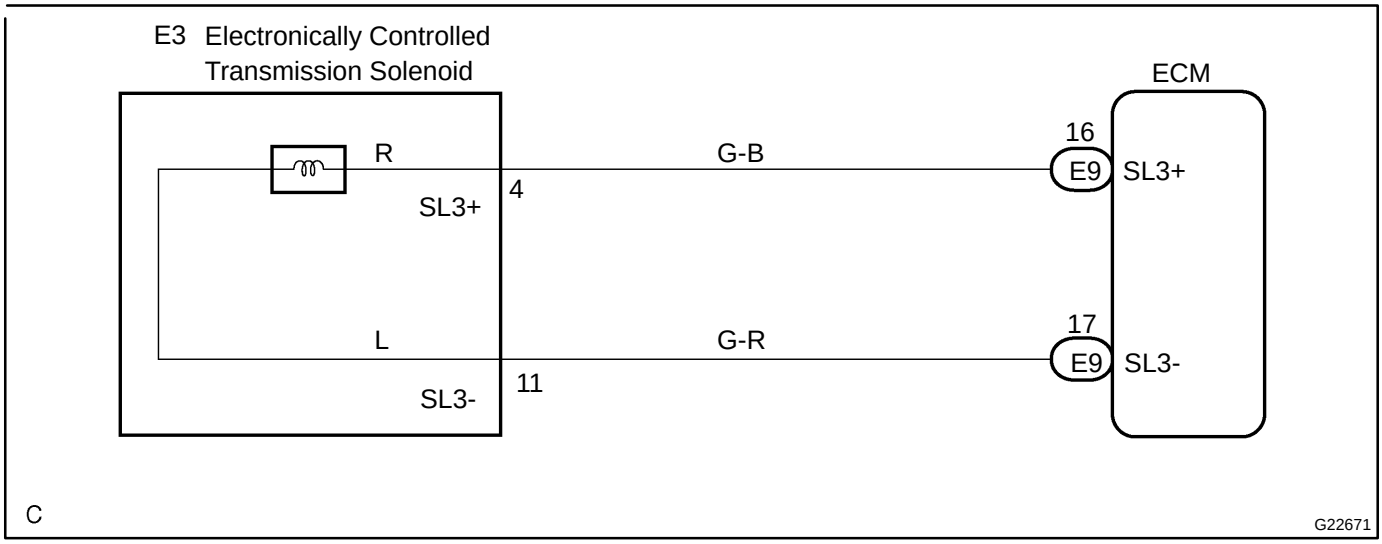

INSPECTION PROCEDURE

1	INSPECT TRANSMISSION WIRE(SL3)

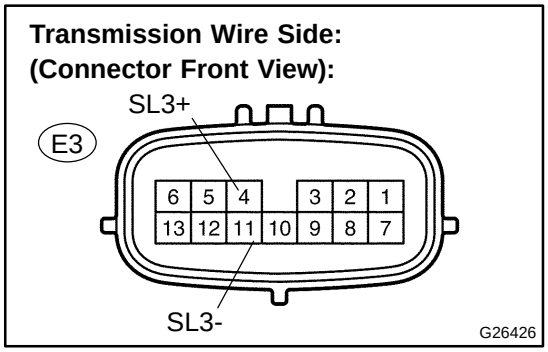

(a) Disconnect the transmission wire connector from the transaxle.

(b) Measure the resistance according to the value(s) in the table below.

Standard:

Tester Connection	Specified Condition 20°C (68°F)
4 (SL3+) - 11 (SL3-)	5.0 to 5.6 Ω

(c) Measure the resistance according to the value(s) in the table below.

Standard (Check for short):

Tester Connection	Specified Condition
4 (SL3+) - Body ground	10 kΩ or higher
11 (SL3-) - Body ground	↑

NG → **Go to step 3**

OK

cardiagn.com

2 CHECK HARNESS AND CONNECTOR(TRANSMISSION WIRE - ECM)

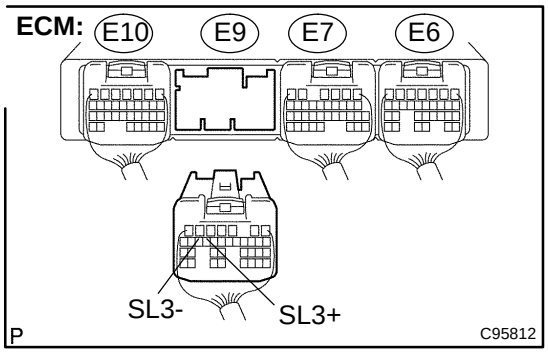

(a) Connect the transmission connector to the transaxle.
(b) Disconnect the connector from the ECM.
(c) Measure the resistance according to the value(s) in the table below.
Standard:

Tester Connection	Specified Condition 20°C (68°F)
E9 - 16 (SL3+) - E9 - 17 (SL3-)	5.0 to 5.6 Ω

(d) Measure the resistance according to the value(s) in the table below.
Standard (Check for short):

Tester Connection	Specified Condition
E9 - 16 (SL3+) - Body ground	10 kΩ or higher
E9 - 17 (SL3-) - Body ground	↑

NG → **REPAIR OR REPLACE HARNESS OR CONNECTOR (SEE PAGE 01-32)**

OK

REPLACE ECM (SEE PAGE 10-9)

3 INSPECT SHIFT SOLENOID VALVE(SL3)

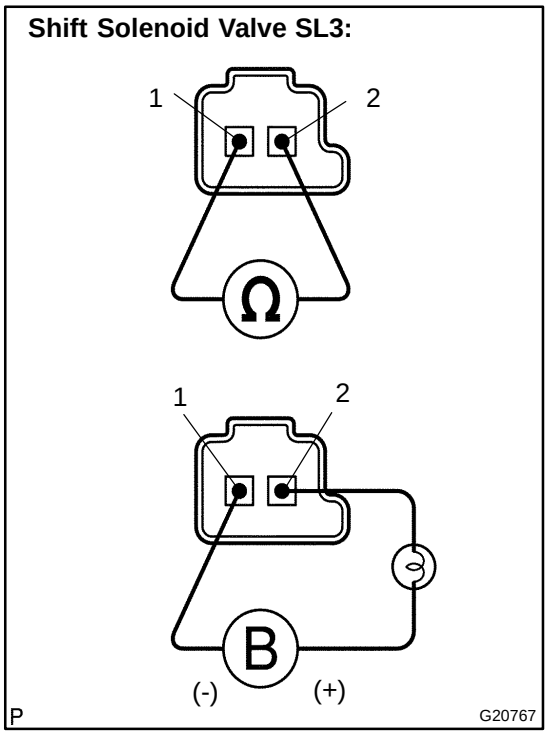

(a) Remove the shift solenoid valve SL3.
(b) Measure the resistance according to the value(s) in the table below.
Standard:

Tester Connection	Specified Condition 20°C (68°F)
1 - 2	5.0 to 5.6 Ω

(c) Connect the positive (+) lead with a 21 W bulb to terminal 2 and the negative (-) lead to terminal 1 of the solenoid valve connector, then check the movement of the valve.
Standard:
The solenoid makes an operating noise.

NG → **REPLACE SHIFT SOLENOID VALVE(SL3)**

OK

REPAIR OR REPLACE TRANSMISSION WIRE (SEE PAGE 40-34)

cardiagn.com

DTC	P0982	SHIFT SOLENOID ”D” CONTROL CIRCUIT LOW (SHIFT SOLENOID VALVE S4)

DTC	P0983	SHIFT SOLENOID ”D” CONTROL CIRCUIT HIGH (SHIFT SOLENOID VALVE S4)

CIRCUIT DESCRIPTION

Shifting from 1st to 5th is performed in combination with ”ON” and ”OFF” operation of the shift solenoid valves SL1, SL2, SL3, S4 and SR which are controlled by the ECM. If an open or short circuit occurs in either of the shift solenoid valves, the ECM controls the remaining normal shift solenoid valves to allow the vehicle to be operated smoothly (Fail safe function).

DTC No.	DTC Detection Condition	Trouble Area
P0982	ECM detects short in solenoid valve S4 circuit 2 times when solenoid valve S4 is operated (1-trip detection logic)	★Short in shift solenoid valve S4 circuit ★Shift solenoid valve S4 ★ECM
P0983	ECM detects open in solenoid valve S4 circuit 2 times when solenoid valve S4 is not operated (1-trip detection logic)	★Open in shift solenoid valve S4 circuit ★Shift solenoid valve S4 ★ECM

MONITOR DESCRIPTION

The ECM commands gear shifts by turning the shift solenoid valves ”ON/OFF”. When there is an open or short circuit in any shift solenoid valve circuit, the ECM detects the problem and illuminates the MIL and stores the DTC. And the ECM performs the fail-safe function and turns the other normal shift solenoid valves ”ON/OFF” (In case of an open or short circuit, the ECM stops sending current to the circuit.)
(see page 05-1 148).

MONITOR STRATEGY

Related DTCs	P0982: Shift solenoid valve S4/Range check (Low resistance) P0983: Shift solenoid valve S4/Range check (High resistance)
Required sensors/Components	Shift solenoid valve S4
Frequency of operation	Continuous
Duration	0.064 sec. or more
MIL operation	Immediate
Sequence of operation	None

TYPICAL ENABLING CONDITIONS

P0982: Range check (Low resistance):

The monitor will run whenever this DTC is not present.	See page 05-1125
Shift solenoid valve S4	ON
Battery voltage	8 V or more
Ignition switch	ON
Starter	OFF

P0983: Range check (High resistance):

The monitor will run whenever this DTC is not present.	See page 05-1125
Shift solenoid valve S4	OFF
Battery voltage	8 V or more
Ignition switch	ON
Starter	OFF

cardiagn.com

TYPICAL MALFUNCTION THRESHOLDS

P0982: Range check (Low resistance):

Shift solenoid valve S4 resistance	8 Ω or less

P0983: Range check (High resistance):

Shift solenoid valve S4 resistance	100 kΩ or more

COMPONENT OPERATING RANGE

Shift solenoid valve S4	Resistance: 11 to 15 Ω at 20°C (68°F)

WIRING DIAGRAM

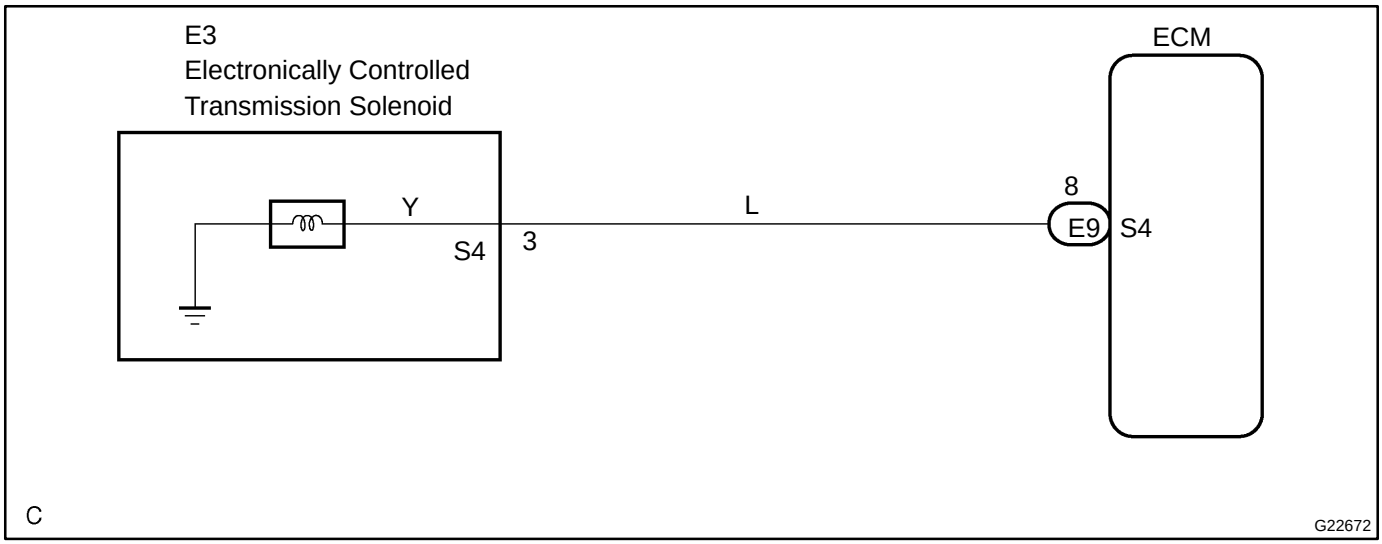

INSPECTION PROCEDURE

1	INSPECT TRANSMISSION WIRE(S4)

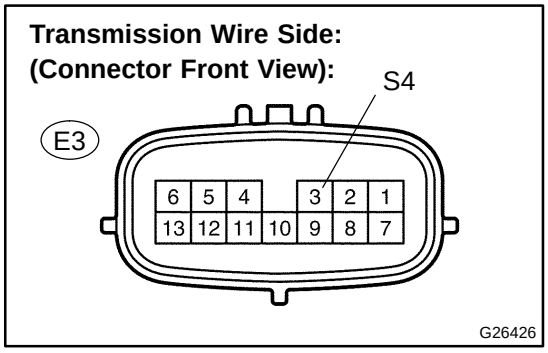

(a) Disconnect the transmission wire connector from the transaxle.

(b) Measure the resistance according to the value(s) in the table below.

Standard:

Tester Connection	Specified Condition 20°C (68°F)
3 - Body ground	11 to 15 Ω

NG → **Go to step 3**

OK

cardiagn.com

2 CHECK HARNESS AND CONNECTOR(TRANSMISSION WIRE - ECM)

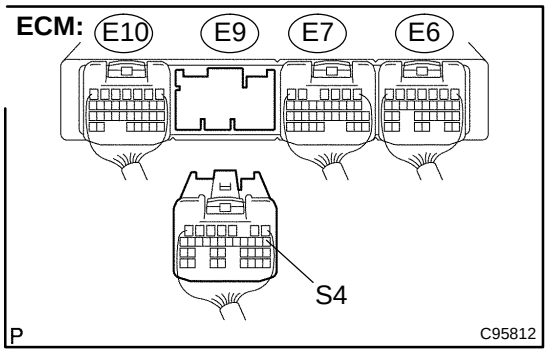

(a) Connect the transmission connector to the transaxle.
(b) Disconnect the connector from the ECM.
(c) Measure the resistance according to the value(s) in the table below.

Standard:

Tester Connection	Specified Condition 20°C (68°F)
E9 - 8 (S4) - Body ground	11 to 15 Ω

NG → **REPAIR OR REPLACE HARNESS OR CONNECTOR (SEE PAGE 01-32)**

OK

REPLACE ECM (SEE PAGE 10-9)

3 INSPECT SHIFT SOLENOID VALVE(S4)

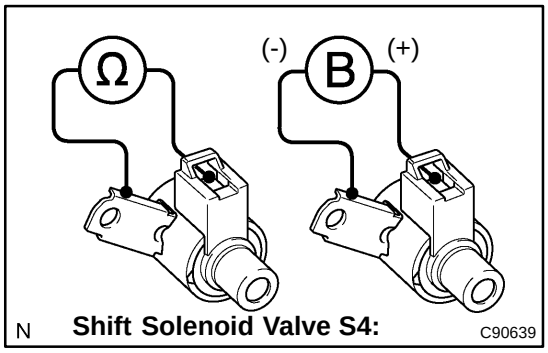

(a) Remove the shift solenoid valve S4.
(b) Measure the resistance according to the value(s) in the table below.

Standard:

Tester Connection	Specified Condition 20°C (68°F)
Solenoid Connector (S4) - Solenoid Body (S4)	11 to 15 Ω

(c) Connect the positive (+) lead to the terminal of the solenoid connector, and the negative (-) lead to the solenoid body.

Standard:

The solenoid makes an operating noise.

NG → **REPLACE SHIFT SOLENOID VALVE(S4)**

OK

REPAIR OR REPLACE TRANSMISSION WIRE (SEE PAGE 40-34)

cardiagn.com

DTC	P0985	SHIFT SOLENOID ”E” CONTROL CIRCUIT LOW (SHIFT SOLENOID VALVE SR)

DTC	P0986	SHIFT SOLENOID ”E” CONTROL CIRCUIT HIGH (SHIFT SOLENOID VALVE SR)

CIRCUIT DESCRIPTION

Shifting from 1st to 5th is performed in combination with ”ON” and ”OFF” operation of the shift solenoid valves SL1, SL2, SL3, S4 and SR which are controlled by the ECM. If an open or short circuit occurs in either of the shift solenoid valves, the ECM controls the remaining normal shift solenoid valves to allow the vehicle to be operated smoothly (Fail safe function).

DTC No.	DTC Detection Condition	Trouble Area
P0985	ECM detects short in solenoid valve SR circuit 2 times when solenoid valve SR is operated (1-trip detection logic)	★Short in shift solenoid valve SR circuit ★Shift solenoid valve SR ★ECM
P0986	ECM detects open in solenoid valve SR circuit 2 times when solenoid valve SR is not operated (1-trip detection logic)	★Open in shift solenoid valve SR circuit ★Shift solenoid valve SR ★ECM

MONITOR DESCRIPTION

The ECM commands gear shifts by turning the shift solenoid valves ”ON/OFF”. When there is an open or short circuit in any shift solenoid valve circuit, the ECM detects the problem and illuminates the MIL and stores the DTC. And the ECM performs the fail-safe function and turns the other normal shift solenoid valves ”ON/OFF” (In case of an open or short circuit, the ECM stops sending current to the circuit.)
(see page 05-1 148).

MONITOR STRATEGY

Related DTCs	P0985: Shift solenoid valve SR/Range check (Low resistance) P0986: Shift solenoid valve SR/Range check (High resistance)
Required sensors/Components	Shift solenoid valve SR
Frequency of operation	Continuous
Duration	0.064 sec. or more
MIL operation	Immediate
Sequence of operation	None

TYPICAL ENABLING CONDITIONS

P0985: Range check (Low resistance)

The monitor will run whenever this DTC is not present.	See page 05-1125
Shift solenoid valve SR	ON
Battery voltage	8 V or more
Ignition switch	ON
Starter	OFF

P0986: Range check (High resistance)

The monitor will run whenever this DTC is not present.	See page 05-1125
Shift solenoid valve SR	OFF
Battery voltage	8 V or more
Ignition switch	ON
Starter	OFF

cardiagn.com

TYPICAL MALFUNCTION THRESHOLDS

P0985: Range check (Low resistance)

Shift solenoid valve SR resistance	8 Ω or less

P0986: Range check (High resistance)

Shift solenoid valve SR resistance	100 kΩ or more

COMPONENT OPERATING RANGE

Shift solenoid valve SR	Resistance: 11 to 15 Ω at 20°C (68°F)

WIRING DIAGRAM

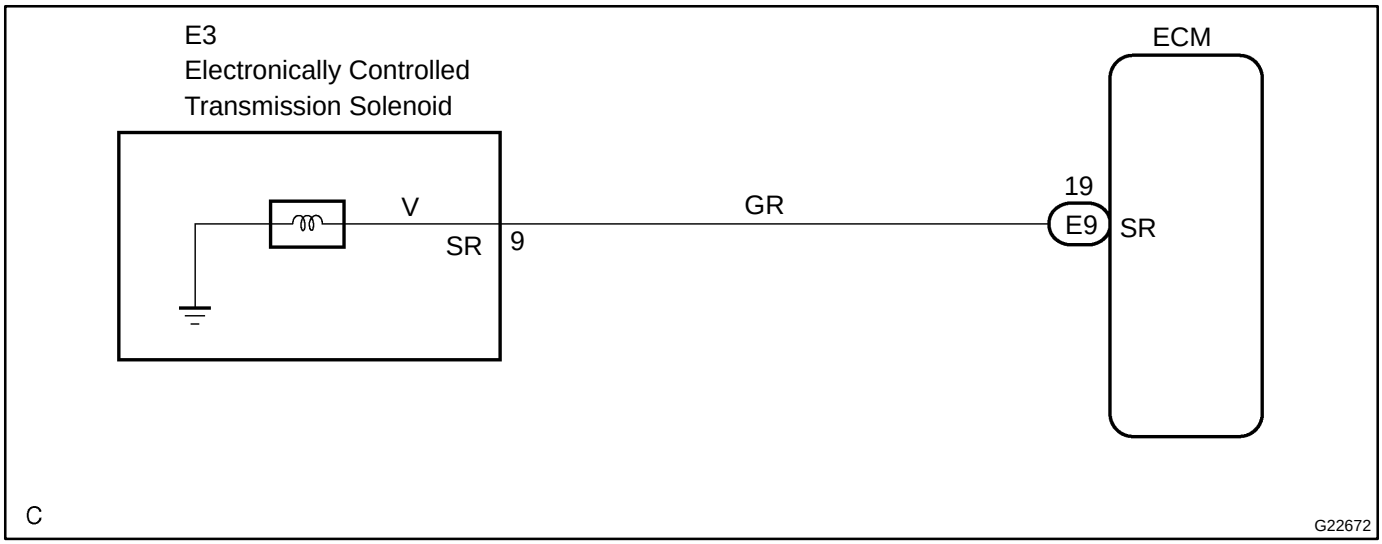

INSPECTION PROCEDURE

1	INSPECT TRANSMISSION WIRE(SR)

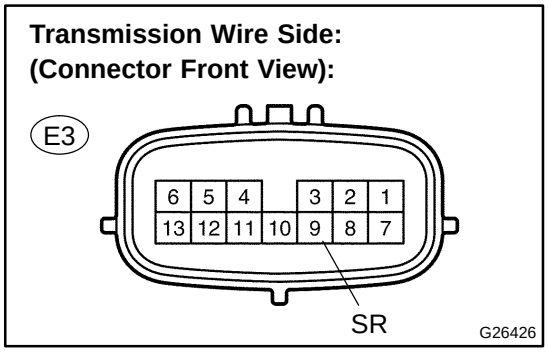

(a) Disconnect the transmission wire connector from the transaxle.

(b) Measure the resistance according to the value(s) in the table below.

Standard:

Tester Connection	Specified Condition 20°C (68°F)
9 - Body ground	11 to 15 Ω

NG → **Go to step 3**

OK

cardiagn.com

2 CHECK HARNESS AND CONNECTOR(TRANSMISSION WIRE - ECM)

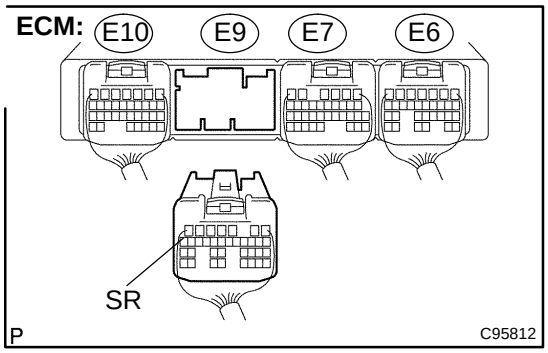

(a) Connect the transmission connector to the transaxle.
(b) Disconnect the connector from the ECM.
(c) Measure the resistance according to the value(s) in the table below.

Standard:

Tester Connection	Specified Condition 20°C (68°F)
E9 - 19 (SR) - Body ground	11 to 15 Ω

NG → **REPAIR OR REPLACE HARNESS OR CONNECTOR (SEE PAGE 01-32)**

OK

REPLACE ECM (SEE PAGE 10-9)

3 INSPECT SHIFT SOLENOID VALVE(SR)

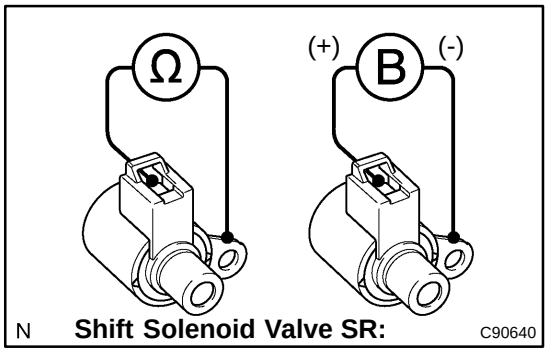

(a) Remove the shift solenoid valve SR.
(b) Measure the resistance according to the value(s) in the table below.

Standard:

Tester Connection	Specified Condition 20°C (68°F)
Solenoid Connector (SR) - Solenoid Body (SR)	11 to 15 Ω

(c) Connect the positive (+) lead to the terminal of the solenoid connector, and the negative (-) lead to the solenoid body.

Standard:

The solenoid makes an operating noise.

NG → **REPLACE SHIFT SOLENOID VALVE(SR)**

OK

REPAIR OR REPLACE TRANSMISSION WIRE (SEE PAGE 40-34)

cardiagn.com

DTC P2716 PRESSURE CONTROL SOLENOID "D" ELECTRICAL (SHIFT SOLENOID SLT)

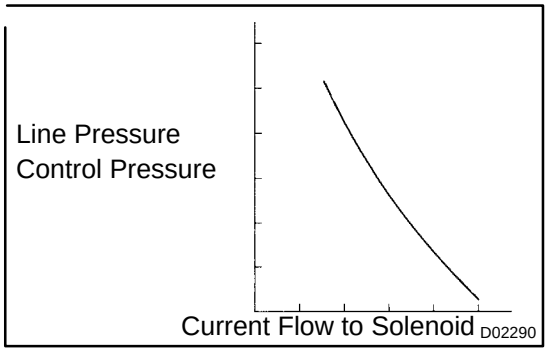

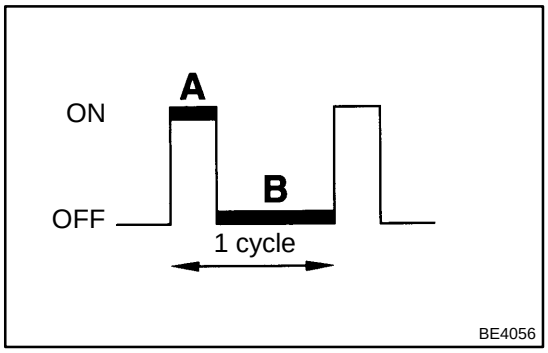

CIRCUIT DESCRIPTION

The linear solenoid valve (SLT) controls the transmission line pressure for smooth transmission operation based on signals from the throttle position sensor and the vehicle speed sensor. The ECM adjusts the duty cycle of the SLT solenoid valve to control hydraulic line pressure coming from the primary regulator valve. Appropriate line pressure assures smooth shifting with varying engine outputs.

(*): Duty Ratio

The duty ratio is the ratio of the period of continuity in one cycle. For example, if A is the period of continuity in one cycle, and B is the period of non-continuity, then

Duty Ratio=A/(A + B) x 100 (%)

DTC No.	DTC Detection Condition	Trouble Area
P2716	Condition (a) or (b) below is detected for 1 sec. or more: (1-trip detection logic) (a) SLT- terminal: 0V (b) SLT- terminal: 12V	★Open or short in shift solenoid valve SLT circuit ★Shift solenoid valve SLT ★ECM

MONITOR DESCRIPTION

When an open or short in the linear solenoid valve (SLT) circuit is detected, the ECM interprets this as a fault. The ECM will turn on the MIL and store the DTC.

MONITOR STRATEGY

Related DTCs	P2716: Shift solenoid valve SLT/Range check
Required sensors/Components	Shift solenoid valve SLT
Frequency of operation	Continuous
Duration	1 sec.
MIL operation	Immediate
Sequence of operation	None

TYPICAL ENABLING CONDITIONS

The monitor will run whenever this DTC is not present.	See page 05-1125
Solenoid current cut status	Not cut
Battery voltage	11 V or more
Ignition switch	ON
Starter	OFF
CPU commanded duty ratio to SLT	19% or more

TYPICAL MALFUNCTION THRESHOLDS

Solenoid status from IC	Fail (Open or short)

cardiagn.com

COMPONENT OPERATING RANGE

Shift solenoid valve SLT	Resistance: 5.0 to 5.6 Ω at 20°C (68°F)

WIRING DIAGRAM

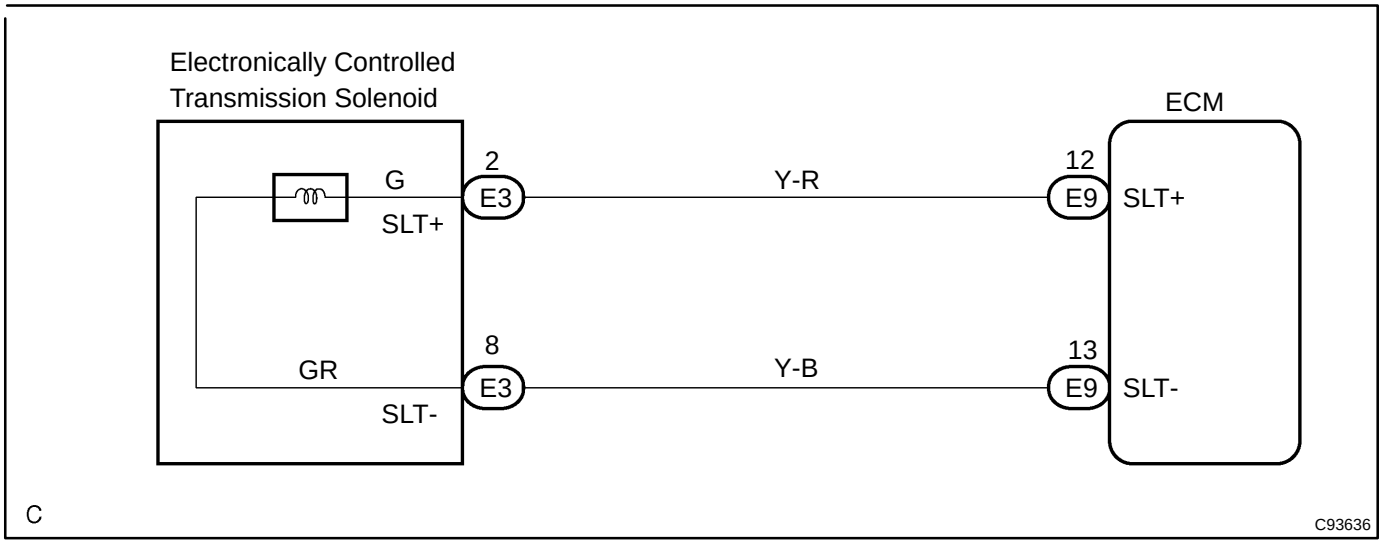

INSPECTION PROCEDURE

1	INSPECT TRANSMISSION WIRE(SLT)

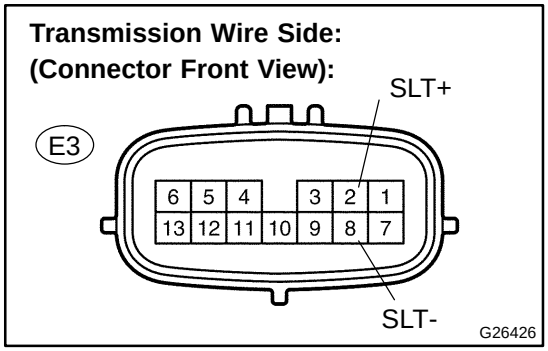

(a) Disconnect the transmission wire connector from the transaxle.

(b) Measure the resistance according to the value(s) in the table below.

Standard:

Tester Connection	Specified Condition 20°C (68°F)
2 (SLT+) - 8 (SLT-)	5.0 to 5.6 Ω

(c) Measure the resistance according to the value(s) in the table below.

Standard (Check for short):

Tester Connection	Specified Condition
2 (SLT+) - Body ground	10 kΩ or higher
8 (SLT-) - Body ground	↑

NG → **Go to step 3**

OK

cardiagn.com

2 CHECK HARNESS AND CONNECTOR(TRANSMISSION WIRE - ECM)

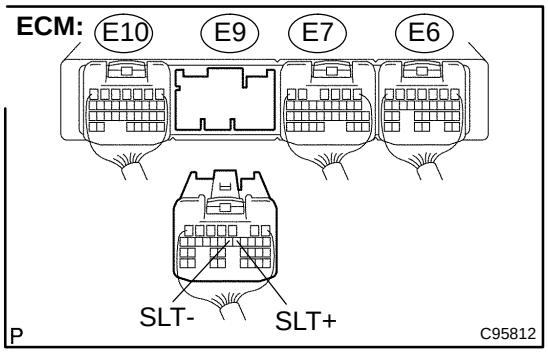

(a) Connect the transmission wire connector to the transaxle.

(b) Disconnect the ECM connector.

(c) Measure the resistance according to the value(s) in the table below.

Standard:

Tester Connection	Specified Condition 20°C (68°F)
E9 - 12 (SLT+) - E9 - 13 (SLT-)	5.0 to 5.6 Ω

(d) Measure the resistance according to the value(s) in the table below.

Standard (Check for short):

Tester Connection	Specified Condition
E9 - 12 (SLT+) - Body ground	10 kΩ or higher
E9 - 13 (SLT-) - Body ground	↑

NG → **REPAIR OR REPLACE HARNESS OR CONNECTOR (SEE PAGE 01-32)**

OK

REPLACE ECM (SEE PAGE 10-9)

cardiagn.com

3 INSPECT SHIFT SOLENOID VALVE(SLT)

Shift Solenoid Valve SLT:

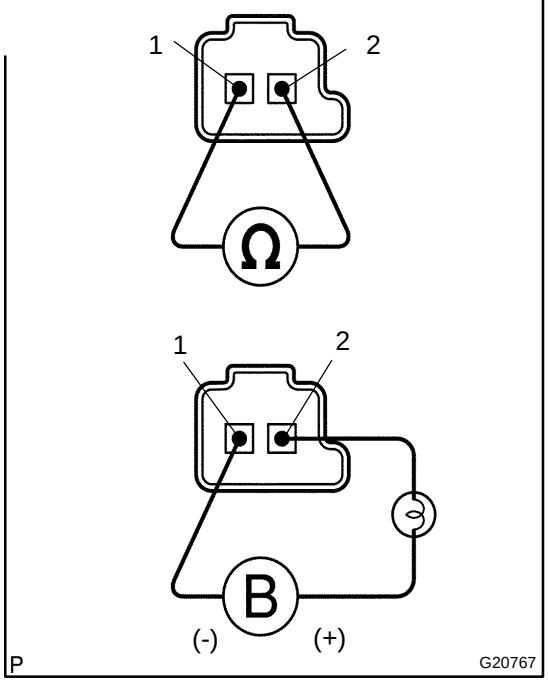

(a) Remove the shift solenoid valve (SLT).

(b) Measure the resistance according to the value(s) in the table below.

Standard:

Tester Connection	Specified Condition 20°C (68°F)
1 - 2	5.0 to 5.6 Ω

(c) Connect the positive (+) lead with a 21 W bulb to terminal 2 and the negative (-) lead to terminal 1 of the solenoid valve connector, then check the movement of the valve.

Standard:

The solenoid makes an operating noise.

NG → **REPLACE SHIFT SOLENOID VALVE(SLT)**

OK

REPAIR OR REPLACE TRANSMISSION WIRE (SEE PAGE 40-34)

cardiagn.com

DTC	P2769	TORQUE CONVERTER CLUTCH SOLENOID CIRCUIT LOW (SHIFT SOLENOID VALVE DSL)

DTC	P2770	TORQUE CONVERTER CLUTCH SOLENOID CIRCUIT HIGH (SHIFT SOLENOID VALVE DSL)

CIRCUIT DESCRIPTION

The shift solenoid valve DSL is turned ”ON” and ”OFF” by signals from the ECM in order to control the hydraulic pressure operation, the lock-up relay valve, which then controls operation of the lock-up clutch.

DTC No.	DTC Detection Condition	Trouble Area
P2769	ECM detects short in solenoid valve DSL circuit (0.1 sec.) when solenoid valve DSL is operated (2-trip detection logic)	★Short in shift solenoid valve DSL circuit ★Shift solenoid valve DSL ★ECM
P2770	ECM detects open in solenoid valve DSL circuit (0.1 sec.) when solenoid valve DSL is not operated (2-trip detection logic)	★Open in shift solenoid valve DSL circuit ★Shift solenoid valve DSL ★ECM

MONITOR DESCRIPTION

Torque converter lock-up is controlled by the ECM based on engine rpm, engine load, engine temperature, vehicle speed, transmission temperature, and shift range selection. The ECM determines the lock-up status of the torque converter by comparing the engine rpm (NE) to the input turbine rpm (NT). The ECM calculates the actual transmission gear by comparing input turbine rpm (NT) to counter gear rpm (NC). When conditions are appropriate, the ECM requests ”lock-up” by applying control voltage to the shift solenoid DSL. When the DSL is opened, it applies pressure to the lock-up relay valve and locks the torque converter clutch. If the ECM detects an open or short in the DSL solenoid circuit, the ECM interprets this as a fault in the DSL solenoid or circuit. The ECM will turn on the MIL and store the DTC.

MONITOR STRATEGY

Related DTCs	P2769: Shift solenoid valve DSL/Range check (Low resistance) P2770: Shift solenoid valve DSL/Range check (High resistance)
Required sensors/Components	Shift solenoid valve DSL
Frequency of operation	Continuous
Duration	0.064 sec. or more
MIL operation	2 driving cycles
Sequence of operation	None

TYPICAL ENABLING CONDITIONS

P2769: Range check (Low resistance):

The monitor will run whenever this DTC is not present.	See page 05-1125
Shift solenoid valve DSL	ON
Solenoid current cut status	Not cut
Battery voltage	8 V or more
Ignition switch	ON
Starter	OFF

cardiagn.com

P2770: Range check (High resistance):

The monitor will run whenever this DTC is not present.	See page 05-1125
Shift solenoid valve DSL	ON
Battery voltage	8 V or more
Ignition switch	ON
Starter	OFF

TYPICAL MALFUNCTION THRESHOLDS

P2769: Range check (Low resistance):

Shift solenoid valve DSL resistance	8 Ω or less

P2770: Range check (High resistance):

Shift solenoid valve DSL resistance	100 kΩ or more

COMPONENT OPERATING RANGE

Shift solenoid valve DSL	Resistance: 11 to 13 Ω at 20°C (68°F)

WIRING DIAGRAM

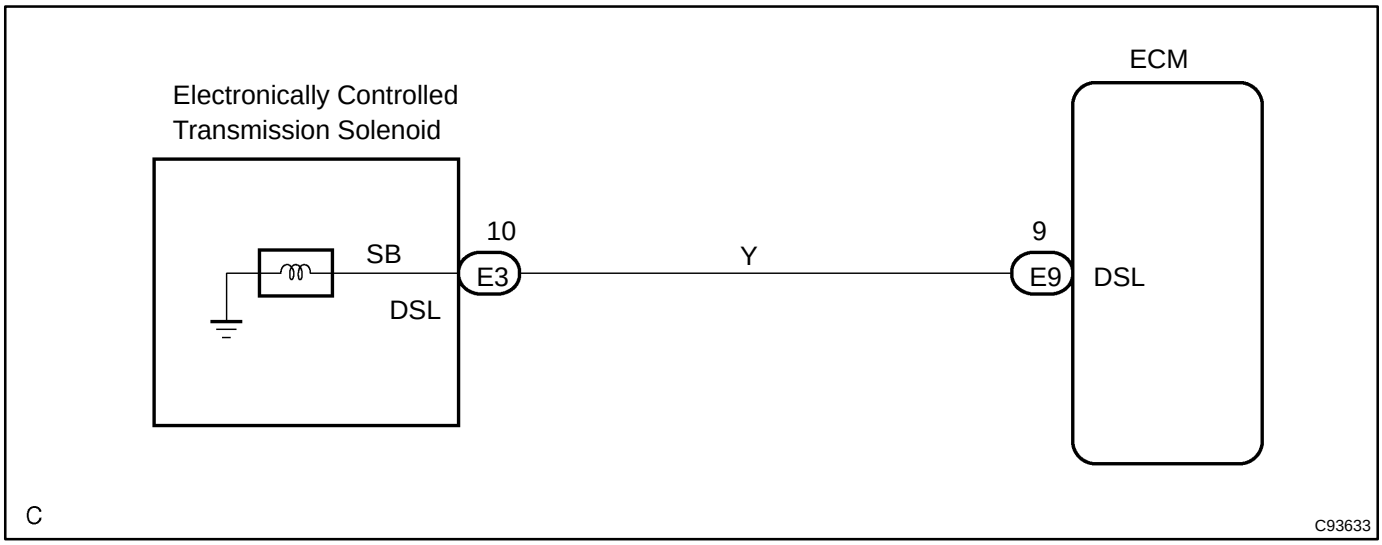

INSPECTION PROCEDURE

1	INSPECT TRANSMISSION WIRE(DSL)

Transmission Wire Side:
(Connector Front View):

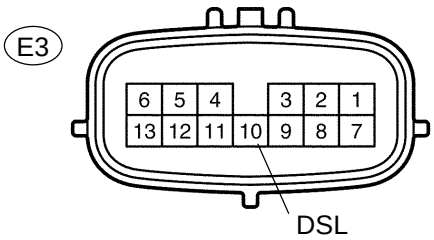

(a) Disconnect the transmission wire connector from the transaxle.

(b) Measure the resistance according to the value(s) in the table below.

Standard:

Tester Connection	Specified Condition 20°C (68°F)
10 - Body ground	11 to 13 Ω

NG → **Go to step 3**

OK

cardiagn.com

2 CHECK HARNESS AND CONNECTOR(TRANSMISSION WIRE - ECM)

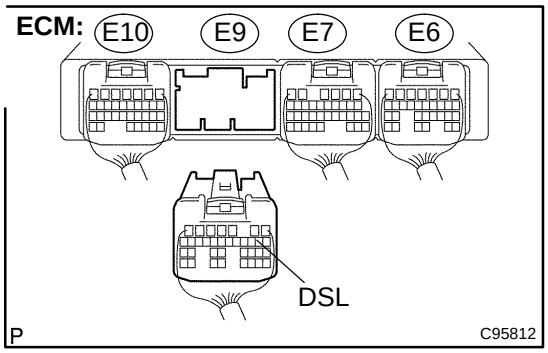

(a) Connect the transmission wire connector.
(b) Disconnect the ECM connector.
(c) Measure the resistance according to the value(s) in the table below.

Standard:

Tester Connection	Specified Condition 20°C (68°F)
E9 - 9 (DSL) - Body ground	11 to 13 Ω

NG → **REPAIR OR REPLACE HARNESS OR CONNECTOR (SEE PAGE 01-32)**

OK

REPLACE ECM (SEE PAGE 10-9)

3 INSPECT SHIFT SOLENOID VALVE(DSL)

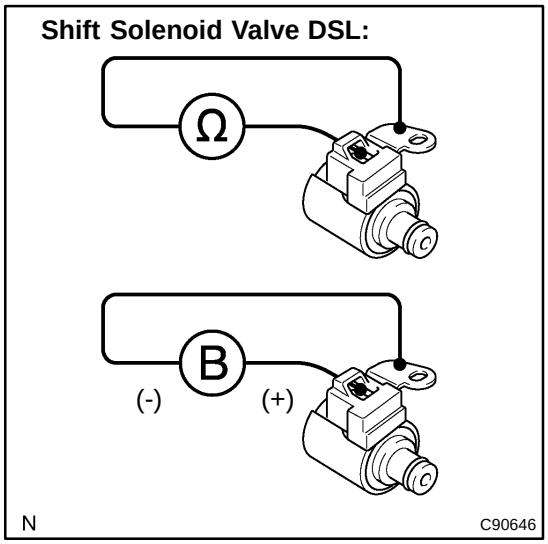

(a) Remove the shift solenoid valve DSL.
(b) Measure the resistance according to the value(s) in the table below.

Standard:

Tester Connection	Specified Condition 20°C (68°F)
Solenoid Connector (DSL) - Solenoid Body (DSL)	11 to 13 Ω

(c) Connect the positive (+) lead to the terminal of the solenoid connector, and the negative (-) lead to the solenoid body.

Standard:

The solenoid valve makes an operating noise.

NG → **REPLACE SHIFT SOLENOID VALVE(DSL)**

OK

REPAIR OR REPLACE TRANSMISSION WIRE (SEE PAGE 40-34)

cardiagn.com

05FBU-03

ROAD TEST

1. PROBLEM SYMPTOM CONFIRMATION

(a) Based on the result of the customer problem analysis, try to reproduce the symptoms. If the problem is that the transaxle does not shift up, shift down, or the shift point is too high or too low, conduct the following road test referring to the automatic shift schedule and simulate the problem symptoms.

2. ROAD TEST

NOTICE:

Perform the test at the normal operating ATF (Automatic Transmission Fluid) temperature: 50 to 80˚C (122 to 176˚F)

(a) D position test:

Shift into the D position and fully depress the accelerator pedal and check the following points.

(1) Check up-shift operation.

Check that 1 → 2, 2 → 3, 3 → 4 and 4 → 5th up-shifts take place, and that the shift points conform to the automatic shift schedule (see page 03-45).

HINT:

5th Gear Up-shift Prohibition Control

★ Engine coolant temperature is 55 ˚C (131 ˚F) or less and vehicle speed is at 70 km/h (43 mph) or less.

★ ATF temperature is -2 ˚C (28 ˚F) or less.

5th and 4th Gear Lock-up Prohibition Control

★ Brake pedal is depressed.

★ Accelerator pedal is released.

★ Engine coolant temperature is 60 ˚C (140 ˚F) or less.

(2) Check for shift shock and slip.

Check for shock and slip at the 1 → 2, 2 → 3, 3 → 4 and 4 → 5th up-shifts.

(3) Check for abnormal noise and vibration.

Check for abnormal noise and vibration when up-shifting from 1 → 2, 2 → 3, 3 → 4 and 4 → 5 while driving with the shift lever in the D position, and check while driving in the lock-up condition.

HINT:

The check for the cause of abnormal noise and vibration must be done thoroughly as it could also be due to loss of balance in the differential, torque converter clutch, etc.

(4) Check kick-down operation.

Check vehicle speeds when the 2nd to 1st, 3rd to 2nd, 4th to 3rd, and 5th to 4th kick-downs take place while driving with the shift lever in the D position. Confirm that each speed is within the applicable vehicle speed range indicated in the automatic shift schedule (see page 03-45).

(5) Check abnormal shock and slip at kick-down.

(6) Check the lock-up mechanism.

★ Drive in the D position (5th gear), at a steady speed (lock-up ON).

★ Lightly depress the accelerator pedal and check that the engine speed does not change abruptly.

HINT:

★ There is no lock-up function in the 1st, 2nd and 3rd gear.

★ 4th lock-up operates while uphill-downhill control is active in the D position.

★ If there is a big jump in engine speed, there is no lock-up.

cardiagn.com

(b) 4 position (O/D OFF) test:
Shift into the 4 position and fully depress the accelerator pedal and check the following points.
(1) Check up-shift operation.
Check that the 1 → 2, 2 → 3 and 3 → 4 up-shifts takes place and that the shift point conforms to the automatic shift schedule (see page 03-45).

HINT:
There is no 5th up-shift in the 4 position.

(2) Check engine braking.
While driving in the 4 position and 4th gear, release the accelerator pedal and check the engine braking effect.
(3) Check for abnormal noises during acceleration and deceleration, and for shock at up-shift and down-shift.

(c) 3 position test:
Shift into the 3 position and fully depress the accelerator pedal and check the following points.
(1) Check up-shift operation.
Check that the 1 → 2 and 2 → 3 up-shift takes place and that the shift point conforms to the automatic shift schedule (see page 03-45).

HINT:
There is no 4th up-shift and lock-up in the 3 position.

(2) Check engine braking.
While running in the 3 position and 3rd gear, release the accelerator pedal and check the engine braking effect.
(3) Check for abnormal noises during acceleration and deceleration, and for shock at up-shift and down-shift.

(d) 2 position test:
Shift into the 2 position and fully depress the accelerator pedal and check the following points.
(1) Check up-shift operation.
Check that the 1 → 2 up-shift takes place and that the shift point conforms to the automatic shift schedule (see page 03-45).

HINT:
There is no 3rd up-shift and lock-up in the 2 position.

(2) Check engine braking.
While running in the 2 position and 2nd gear, release the accelerator pedal and check the engine braking effect.
(3) Check for abnormal noises during acceleration and deceleration, and for shock at up-shift and down-shift.

(e) L position test:
Shift into the L position and fully depress the accelerator pedal and check the following points.
(1) Check no up-shift.
While running in the L position, check that there is no up-shift to 2nd gear.

HINT:
There is no lock-up in the L position.

(2) Check engine braking.
While running in the L position, release the accelerator pedal and check the engine braking effect.
(3) Check for abnormal noises during acceleration and deceleration.

cardiagn.com

(f) R position test:
Shift into the R position, lightly depress the accelerator pedal, and check that the vehicle moves backward without any abnormal noise or vibration.

CAUTION:
Before conducting this test, ensure that the test area is free from people and obstruction.

(g) P position test:
Stop the vehicle on a grade (more than 5˚) and after shifting into the P position, release the parking brake. Then, check that the parking lock pawl holds the vehicle in place.

(h) Uphill/downhill control function test:
(1) Check that the gear does not up-shift to the 4th or 5th gear while the vehicle is driving uphill.
(2) Check that the gear automatically down-shifts from the 5th to 4th or from the 4th to 3rd gear when brake is applied while the vehicle is driving downhill.

cardiagn.com

05FBT-01

SYSTEM DESCRIPTION

1. SYSTEM DESCRIPTION

(a) The ECT (Electronic controlled automatic transmission/transaxle) is an automatic transmission/transaxle that electronically controls shift timing using the ECM. The ECM detects electrical signals that indicate engine and driving conditions, controls the shift point, and selects the appropriate shift pattern based on driver habits and road conditions. As a result, fuel efficiency and power transmission/transaxle performance are improved.
Shift shock has been reduced by controlling the engine and transmission/transaxle simultaneously.
In addition, the ECT has the following features:
- ★ Diagnostic function.
- ★ Fail-safe function when a malfunction occurs.

cardiagn.com

05FBS-02

SYSTEM DIAGRAM

The configuration of the electronic control system in the U250E automatic transaxles is as shown in the following chart.

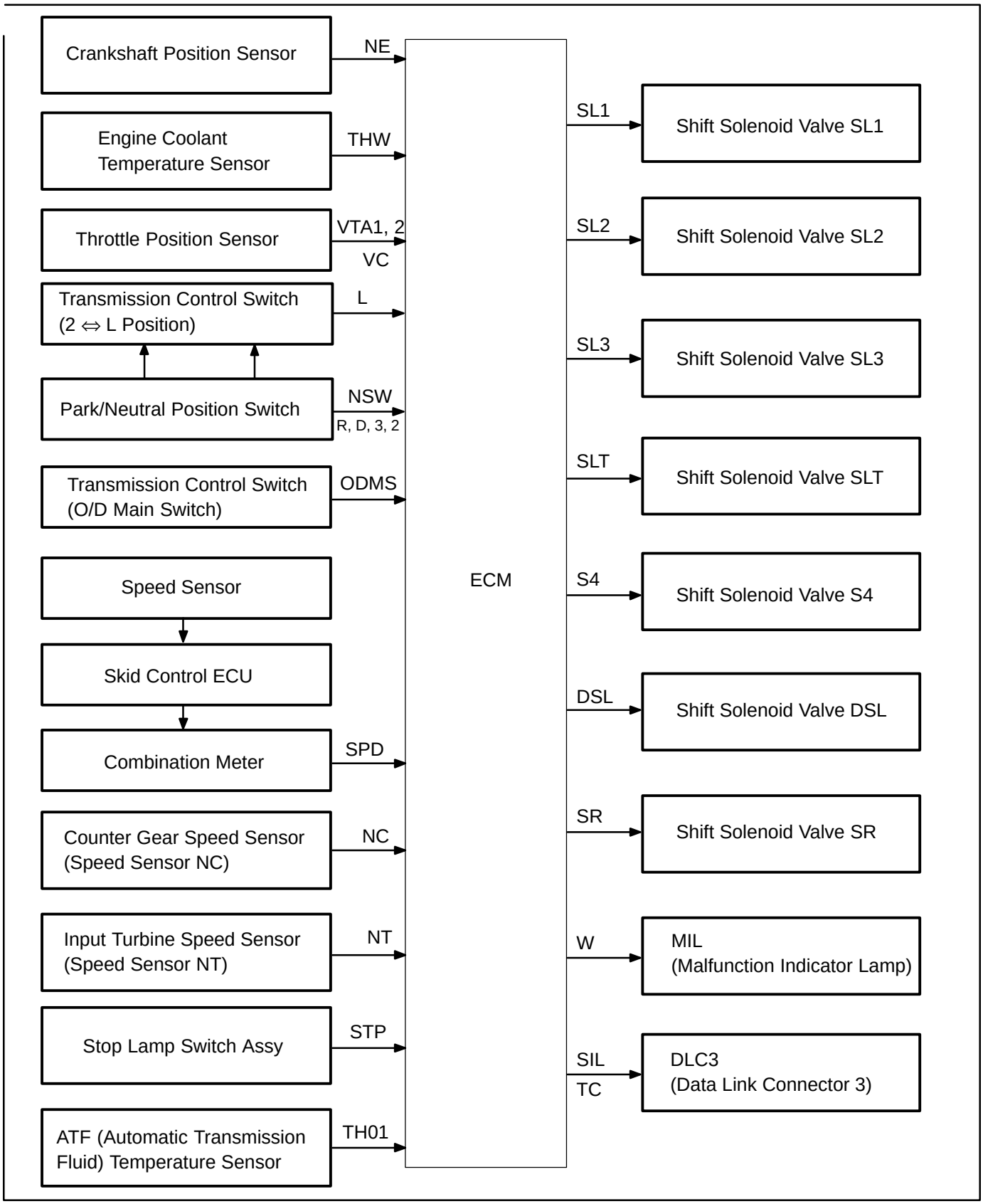

cardiagn.com

05FC8-03

PART AND SYSTEM NAME LIST

This reference list indicates the part names used in this manual along with their definitions.

Part and system name	Definition
Toyota HCAC system, Hydrocarbon adsorptive Catalyst (HCAC) system, HC adsorptive three-way catalyst	HC adsorptive three-way catalytic converter
Variable valve timing sensor, VVT sensor	Camshaft position sensor
Variable valve timing system, VVT system	Camshaft timing control system
Camshaft timing oil control valve, Oil control valve OCV, VVT, VSV	Camshaft timing oil control valve
Variable timing and lift, VVTL	Camshaft timing and lift control
Crankshaft position sensor ”A”	Crankshaft position sensor
Engine speed sensor	Crankshaft position sensor
THA	Intake air temperature
Knock control module	Engine knock control module
Knock sensor	Engine knock sensor
Mass or volume air flow circuit	Mass air flow sensor circuit
Vacuum sensor	Manifold air pressure sensor
Internal control module, Control module, Engine control ECU, PCM	Power train control module
FC idle	Deceleration fuel cut
Idle air control valve	Idle speed control
VSV for CCV, Canister close valve VSV for canister control	Evaporative emissions canister vent valve
VSV for EVAP, Vacuum switching valve assembly No. 1, EVAP VAV, Purge VSV	Evaporative emissions canister purge valve
VSV for pressure switching valve, Bypass VSV	Evaporative emission pressure switching valve
Vapor pressure sensor, EVAP pressure sensor, Evaporative emission control system pressure sensor	Fuel tank pressure sensor
Charcoal canister	Evaporative emissions canister
ORVR system	On-board refueling vapor recovery system
Intake manifold runner control	Intake manifold tuning system
Intake manifold runner valve, IMRV, IACV (runner valve)	Intake manifold tuning valve
Intake control VSV	Intake manifold tuning solenoid valve
AFS	Air fuel ratio sensor
O2 sensor	Heater oxygen sensor
Oxygen sensor pumping current circuit	Oxygen sensor output signal
Oxygen sensor reference ground circuit	Oxygen sensor signal ground
Accel position sensor	Accelerator pedal position sensor
Throttle actuator control motor, Actuator control motor, Electronic throttle motor, Throttle control motor	Electronic throttle actuator
Electronic throttle control system, Throttle actuator control system	Electronic throttle control system
Throttle/pedal position sensor, Throttle/pedal position switch, Throttle position sensor/switch	Throttle position sensor
Turbo press sensor	Turbocharger pressure sensor
Turbo VSV	Turbocharger pressure control solenoid valve
P/S pressure switch	Power-steering pressure switch
VSV for ACM	Active control engine mount
Speed sensor, Vehicle speed sensor ”A”, Speed sensor for skid control ECU	Vehicle speed sensor
ATF temperature sensor, Trans. fluid temp. sensor, ATF temperature sensor ”A”	Transmission fluid temperature sensor
Electronic controlled automatic transmission, ECT	Electronically controlled automatic
Intermediate shaft speed sensor ”A”	Counter gear speed sensor

cardiagn.com

Part and system name	Definition
Output speed sensor	Output shaft speed sensor
Input speed sensor, Input turbine speed sensor ”A”, Speed sensor (NT), Turbine speed sensor	Input turbine speed sensor
PNP switch, NSW	Park/neutral position switch
Pressure control solenoid	Transmission pressure control solenoid
Shift solenoid	Transmission shift solenoid valve
Transmission control switch, Shift lock control unit	Shift lock control module
Engine immobilizer system, Immobilizer system	Vehicle anti-theft system

cardiagn.com

0527I-39

CUSTOMER PROBLEM ANALYSIS CHECK

Automatic Transaxle System Check Sheet	Inspector's Name :

Customer's Name		VIN	
		Production Date	/ /
		Licence plate No.	
Date Vehicle Brought In	/ /	Odometer Reading	km mile

Date Problem Occurred	/ /
How Often Does Problem Occur?	☐ Continuous ☐ Intermittent (times a day)

Symptoms	☐ Vehicle does not move (☐ Any position ☐ particular position)
	☐ No up-shift (☐ 1st → 2nd ☐ 2nd → 3rd ☐ 3rd → 4th ☐ 4th → 5th)
	☐ No down-shift (☐ 5th → 4th ☐ 4th → 3rd ☐ 3rd → 2nd ☐ 2nd → 1st)
	☐ Lock-up malfunction
	☐ Shift point too high or too low
	☐ Harsh engagement (☐ N → D ☐ Lock-up ☐ Any drive position)
	☐ Slip or shudder
	☐ No kick-down
	☐ Others ( )

Check Item	Malfunction Indicator Lamp	☐ Normal ☐ Remains ON

DTC Check	1st Time	☐ Normal system code ☐ Trouble code (DTC)
	2nd Time	☐ Normal system code ☐ Trouble code (DTC)

cardiagn.com

0527K-44

DIAGNOSTIC TROUBLE CODE CHART

If a DTC is displayed during the DTC check, check the parts listed in the table below and proceed to the page given.

HINT:

- *1 : ★ ... The MIL (Malfunction Indicator Lamp) lights up
- *2 : ○ ... The ECM memorizes the trouble code if the ECM detects the DTC detection condition.
- This DTC may be output when the clutch, brake and gear components etc. inside the automatic transaxle are damaged.

DTC No. (See Page)	Detection Item	Trouble Area	MIL *1	Memory *2
P0500 (05-216)	Vehicle Speed Sensor "A"	° Combination meter ° Open or short in vehicle speed sensor circuit ° Vehicle speed sensor ° ECM	★	○
P0705 (05-1154)	Transmission Range Sensor Circuit Malfunction (PRNDL Input)	° Open or short in park/neutral position switch circuit ° Park/neutral position switch ° ECM	★	○
P0710 (05-1159)	Transmission Fluid Temperature Sensor "A" Circuit	° Open or short in ATF temperature sensor circuit ° Transmission wire (ATF temperature sensor) ° ECM	★	○
P0711 (05-1164)	Transmission Fluid Temperature Sensor "A" Performance	° Open or short in ATF temperature sensor circuit ° Transmission wire (ATF temperature sensor) ° ECM	★	○
P0712 (05-1159)	Transmission Fluid Temperature Sensor "A" Circuit Low Input	° Short in ATF temperature sensor circuit ° Transmission wire (ATF temperature sensor) ° ECM	★	○
P0713 (05-1159)	Transmission Fluid Temperature Sensor "A" Circuit High Input	° Open in ATF temperature sensor circuit ° Transmission wire (ATF temperature sensor) ° ECM	★	○
P0717 (05-1168)	Turbine Speed Sensor Circuit No Signal	° Open or short in transmission revolution sensor NT (speed sensor NT) circuit ° Transmission revolution sensor NT (speed sensor NT) ° ECM ° Automatic transaxle assembly	★	○
P0724 (05-1172)	Brake Switch "B" Circuit High	° Short in stop light switch circuit ° Stop light switch ° ECM	★	○
P0741 (05-1175)	Torque Converter Clutch Solenoid Performance (Shift Solenoid Valve DSL)	° Shift solenoid valve DSL remains open or closed ° Valve body is blocked ° Shift solenoid valve DSL ° Torque converter clutch ° Automatic transaxle (clutch, brake or gear etc.) ° Line pressure is too low ° ECM	★	○
P0746 (05-1180)	Pressure Control Solenoid "A" Performance (Shift Solenoid Valve SL1)	° Shift solenoid valve SL1 remains open or closed ° Valve body is blocked ° Shift solenoid valve SL1 ° Automatic transaxle (clutch, brake or gear etc.) ° ECM	★	○
P0748 (05-1184)	Pressure Control Solenoid "A" Electrical (Shift Solenoid Valve SL1)	° Open or short in shift solenoid valve SL1 circuit ° Shift solenoid valve SL1 ° ECM	★	○

cardiagn.com

P0766 (05-1187)	Shift Solenoid "D" Performance (Shift Solenoid Valve S4)	° Shift solenoid valve S4 remains open or closed ° Valve body is blocked ° Shift solenoid valve S4 ° Automatic transaxle (clutch, brake or gear etc.) ° ECM	★	○
P0771 (05-1192)	Shift Solenoid "E" Performance (Shift Solenoid Valve SR)	° Shift solenoid valve SR remains open or closed ° Valve body is blocked ° Shift solenoid valve SR ° Automatic transaxle (clutch, brake or gear etc.) ° ECM	★	○
P0776 (05-1197)	Pressure Control Solenoid "B" Performance (Shift Solenoid Valve SL2)	° Shift solenoid valve SL2 remains open or closed ° Valve body is blocked ° Shift solenoid valve SL2 ° Automatic transaxle (clutch, brake or gear etc.) ° ECM	★	○
P0778 (05-1202)	Pressure Control Solenoid "B" Electrical (Shift Solenoid Valve SL2)	° Open or short in shift solenoid valve SL2 circuit ° Shift solenoid valve SL2 ° ECM	★	○
P0793 (05-1205)	Intermediate Shaft Speed Sensor "A"	° Open or short in transmission revolution sensor NC (speed sensor NC) circuit ° Transmission revolution sensor NC (speed sensor NC) ° ECM	★	○
P0796 (05-1209)	Pressure Control Solenoid "C" Performance (Shift Solenoid Valve SL3)	° Shift solenoid valve SL3 remains open or closed ° Valve body is blocked ° Shift solenoid valve SL3 ° Automatic transaxle (clutch, brake or gear etc.) ° ECM	★	○
P0798 (05-1214)	Pressure Control Solenoid "C" Electrical (Shift Solenoid Valve SL3)	° Open or short in shift solenoid valve SL3 circuit ° Shift solenoid valve SL3 ° ECM	★	○
P0982 (05-1217)	Shift Solenoid "B" Control Circuit Low (Shift Solenoid Valve S4)	° Short in shift solenoid valve S4 circuit ° Shift solenoid valve S4 ° ECM	★	○
P0983 (05-1217)	Shift Solenoid "B" Control Circuit High (Shift Solenoid Valve S4)	° Open in shift solenoid valve S4 circuit ° Shift solenoid valve S4 ° ECM	★	○
P0985 (05-1220)	Shift Solenoid "E" Control Circuit Low (Shift Solenoid Valve SR)	° Short in shift solenoid valve SR circuit ° Shift solenoid valve SR ° ECM	★	○
P0986 (05-1220)	Shift Solenoid "E" Control Circuit High (Shift Solenoid Valve SR)	° Open in shift solenoid valve SR circuit ° Shift solenoid valve SR ° ECM	★	○
P2716 (05-1223)	Pressure Control Solenoid "D" Electrical (Shift Solenoid Valve SLT)	° Open or short in shift solenoid valve SLT circuit ° Shift solenoid valve SLT ° ECM	★	○
P2769 (05-1227)	Torque Converter Clutch Solenoid Circuit Low (Shift Solenoid Valve DSL)	° Short in shift solenoid valve DSL circuit ° Shift solenoid valve DSL ° ECM	★	○
P2770 (05-1227)	Torque Converter Clutch Solenoid Circuit High (Shift Solenoid Valve DSL)	° Open in shift solenoid valve DSL circuit ° Shift solenoid valve DSL ° ECM	★	○

cardiagn.com

0527H-40

HOW TO PROCEED WITH TROUBLESHOOTING

The hand-held tester can be used at steps 3, 4, 6, and 9.

1	**Vehicle Brought to Workshop**

NEXT

2	**Customer Problem Analysis (SEE PAGE 05-1 114)**

NEXT

3	**Connect the OBD II scan tool or hand-held tester to DLC3**

NEXT

4	**Check and Clear DTC and Freeze Frame Data (SEE PAGE 05-1 144)**

NEXT

5	**Visual Inspection**

NEXT

6	**Setting the Check Mode Diagnosis (SEE PAGE 05-1 146)**

NEXT

7	**Problem Symptom Confirmation (SEE PAGE 05-1 115)**

Symptom does not occur: Go to step 8

Symptom occurs: Go to step 9

8	**Symptom Simulation (SEE PAGE 01-22)**

NEXT

9	**DTC Check (SEE PAGE 05-1 144)**

DTC is not output: Go to step 10

DTC is output: Go to step 18

cardiagn.com

10	Basic Inspection (SEE PAGE 40-2 , 40-7 and 40-64)

NG → Go to step 20

OK

11	Mechanical System Test (SEE PAGE 05-1 118)

NG → Go to step 17

OK

12	Hydraulic Test (SEE PAGE 05-1 120)

NG → Go to step 17

OK

13	Manual Shifting Test (SEE PAGE 05-1 122)

NG → Go to step 15

OK

14	Problem Symptoms Table Chapter 1 (SEE PAGE 05-1 134)

NG → Go to step 19

OK

15	Problem Symptoms Table Chapter 2 (SEE PAGE 05-1 134)

NG

16	Part Inspection

→ Go to step 20

17	DTC Chart (SEE PAGE 05-1 152)

NEXT

18	Circuit Inspection

NEXT

cardiagn.com

19	Repair or Replace

NEXT

20	Confirmation Test

NEXT

End

cardiagn.com

DTC P0711 TRANSMISSION FLUID TEMPERATURE SENSOR "A" PERFORMANCE

CIRCUIT DESCRIPTION

The ATF (Automatic Transmission Fluid) temperature sensor converts the fluid temperature into a resistance value which is input into the ECM.

DTC No.	DTC Detection Condition	Trouble Area
P0711	(A) Both (a) and (b) are detected: (2-trip detection logic) (a) Intake air and engine coolant temps. are more than -10˚C (14°F) at engine start (b) After normal driving for over 20 min. and 9 km (6 mile) or more, ATF temp. is less than 20˚C (68°F) (B) After 17 min. of engine start, the ATF temp. is 110˚C (230°F) or more (2-trip detection logic).	★Open or short in ATF temperature sensor circuit ★Transmission wire (ATF temperature sensor) ★ECM

MONITOR DESCRIPTION

The ATF temperature sensor converts the ATF temperature to an electrical resistance value. Based on the resistance, the ECM determines the ATF temperature and detects an open or short in the ATF temperature circuit or a fault in the ATF temperature sensor.

After running the vehicle for a certain period, the ATF temperature should increase. If the ATF temperature is below 20°C (68°F) after running the vehicle for a certain period, the ECM interprets this as a fault, and turns on the MIL.

When the ATF temperature is 110°C (230°F) or more after 17 minutes of engine cold start, the ECM also determines this as a fault, turns on the MIL, and stores the DTC.

MONITOR STRATEGY

Related DTCs	P0711: ATF temperature sensor/Rationality check
Required sensors/Components	ATF temperature sensor
Frequency of operation	Continuous
Duration	3 sec.: Condition (A) 10 sec.: Condition (B)
MIL operation	2 driving cycles
Sequence of operation	None

TYPICAL ENABLING CONDITIONS

All:

The monitor will run whenever this DTC is not present	See page 05-1125
Time after engine start	16 min. and 40 sec. or more
ECT (Engine coolant temperature)	-15 °C (5°F) or more
TFT (Transmission fluid temperature) sensor circuit	Not circuit malfunction
ECT sensor circuit	Not circuit malfunction
IAT sensor circuit	Not circuit malfunction
Electronic throttle system	Not circuit malfunction

Condition (A):

Time after engine start	18 min. and 20 sec
Driving distance after engine start	9 km (5.6 mile) or more
IAT (12 sec. after starting engine)	-10 °C (14°F) or more
ECT (12 sec. after starting engine)	-10 °C (14°F) or more

Condition (B):

ECT (Current temperature)	60°C (140°F) or more
ECT (12 sec. after engine start)	Less than 35°C (95°F)

cardiagn.com

TYPICAL MALFUNCTION THRESHOLDS

Either of the following conditions is met: Condition (A) or (B)

Condition (A):

TFT (Transmission fluid temperature)	Less than 20°C (68°F)

Condition (B):

TFT (Transmission fluid temperature)	110°C (230°F) or more

COMPONENT OPERATING RANGE

TFT (Transmission fluid temperature)	Atmospheric temperature to approx. 130°C (266°F)

WIRING DIAGRAM

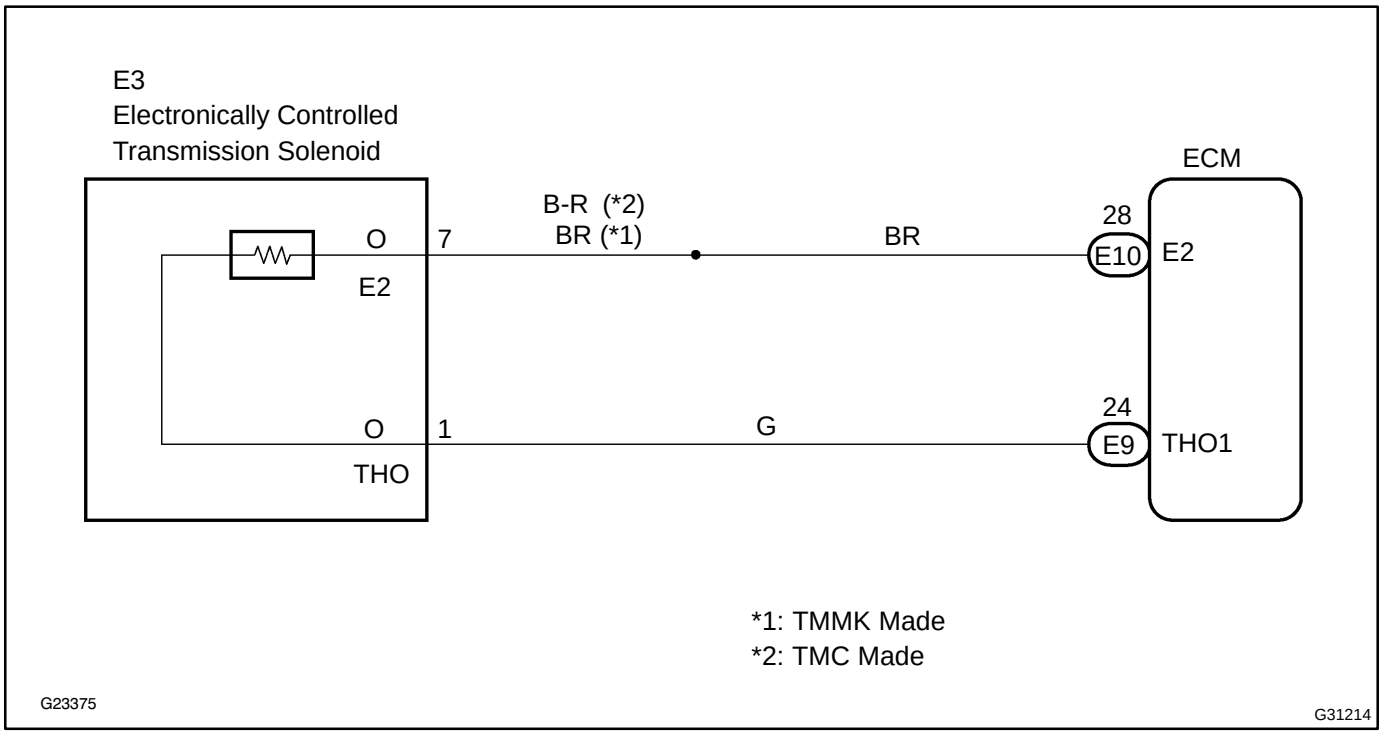

cardiagn.com

INSPECTION PROCEDURE

HINT:
According to the DATA LIST displayed by the OBD II scan tool or hand-held tester, you can read the value of the switch, sensor, actuator and so on without parts removal. Reading the DATA LIST as the first step of troubleshooting is one method to shorten labor time.

(a) Warm up the engine.
(b) Turn the ignition switch off.
(c) Connect the OBD II scan tool or hand-held tester to the DLC3.
(d) Turn the ignition switch to the ON position.
(e) Push the ”ON” button of the OBD II scan tool or the hand-held tester.
(f) When you use hand-held tester:
Select the item ”DIAGNOSIS/ENHANCED OBD II/DATA LIST”.
(g) According to the display on the tester, read the ”DATA LIST”.

Item	Measurement Item/ Range (display)	Normal Condition
AT FLUID TEMP	ATF Temp. Sensor Value/ min.: -40°C (-40°F) max.: 215°C (419°F)	Approx. 80°C (176°F) (After Stall Test)

HINT:
When DTC P0712 is output and OBD II scan tool or hand-held tester output is 150°C (302°F), there is a short circuit.
Measure the resistance between THO1 (THO) and body ground.

Temperature Displayed	Malfunction
-40 ˚C (-40˚F)	Open circuit
150˚C (302˚F) or more	Short circuit

HINT:
If a circuit related to the ATF temperature sensor becomes open, P0713 is immediately set (in 0.5 second). When P0713 is set, P0711 cannot be detected.
It is not necessary to inspect the circuit when P0711 is set.

1	CHECK OTHER DTCS OUTPUT(IN ADDITION TO DTC P0711)

(a) Connect the OBD II scan tool or the hand-held tester to the DLC3.
(b) Turn the ignition switch to the ON position and turn the OBD II scan tool or the hand-held tester main switch ON.
(c) When you use hand-held tester:
Select the item ”DIAGNOSIS/ENHANCED OBD II/DTC INFO/CURRENT CODES”.
(d) Read the DTCs using the OBD II scan tool or the hand-held tester.

Result:

Display (DTC output)	Proceed to
Only ”P0711” is output	A
”P0711” and other DTCs	B

HINT:
If any other codes besides ”P0711” are output, perform the troubleshooting for those DTCs first.

B → **GO TO RELEVANT DTC CHART (SEE PAGE 05-1 152)**

A

cardiagn.com

2	CHECK TRANSAXLE FLUID LEVEL (SEE PAGE 40-2)

NG → ADD FLUID

OK

REPLACE TRANSMISSION WIRE (SEE PAGE 40-34)

cardiagn.com

0527L-40

LOCATION

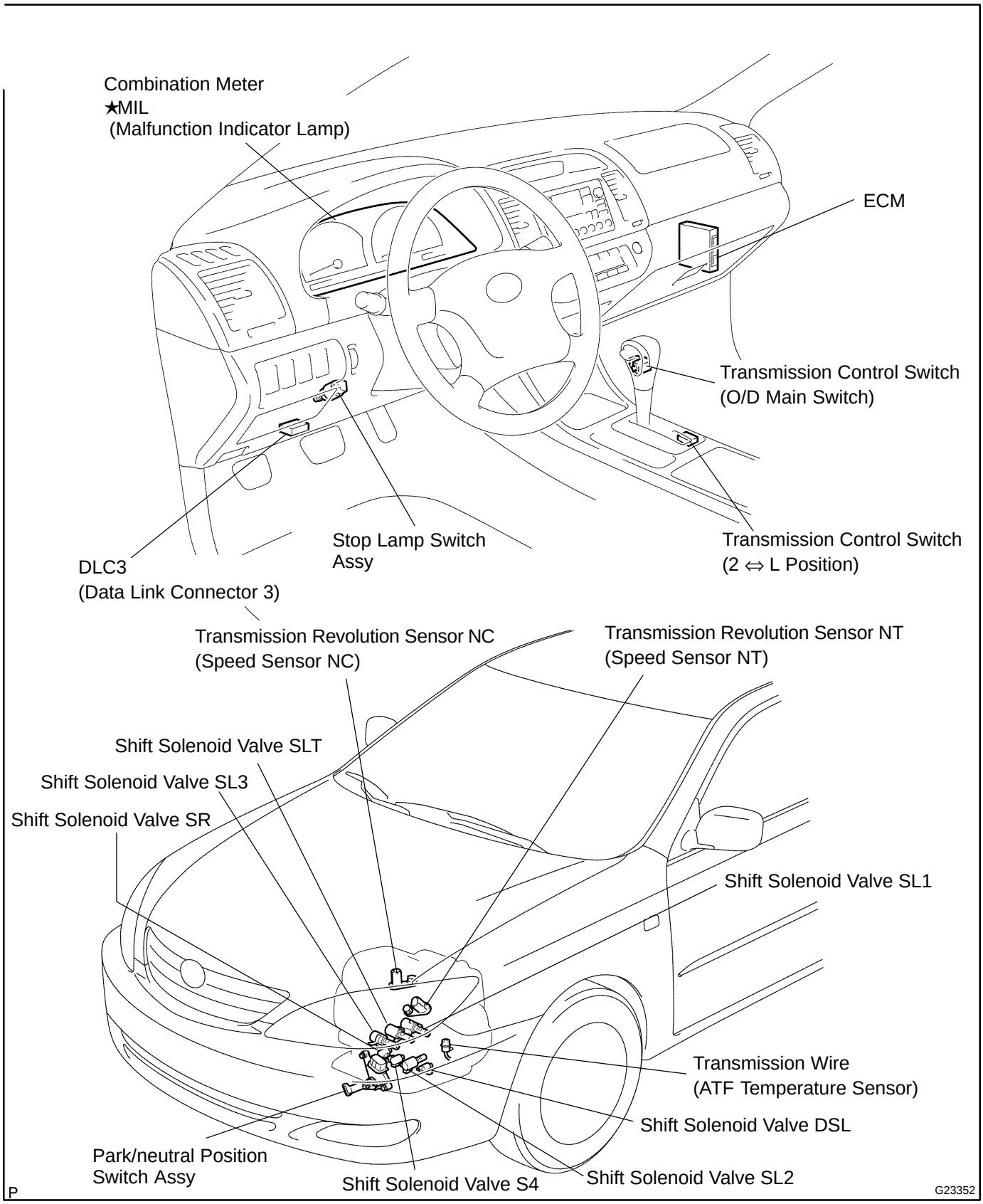

cardiagn.com

ELECTRONIC CONTROLLED AUTOMATIC TRANSAXLE [ECT] (U250E)

05C0T-25

PRECAUTION

NOTICE:

Perform the RESET MEMORY (AT initialization) when replacing the automatic transaxle assy, engine assy or ECM (see page 05-1 123).

HINT:

Initialization can not be completed by only disconnecting the battery terminal.

cardiagn.com

0527M-43

PROBLEM SYMPTOMS TABLE

HINT:

If a normal code is displayed during the diagnostic trouble code check although the trouble still occurs, check the electrical circuits for each symptom in the order given in the charts on the following pages and proceed to the page given for troubleshooting.

The Matrix Chart is divided into 2 chapters.

1. Chapter 1: Electronic Circuit Matrix Chart

- Refer to the table below when the trouble cause is considered to be electrical.
- If the instruction ”Proceed to next circuit inspection shown on matrix chart” is given in the flow chart of each circuit, proceed to the circuit with the next highest number in the table to continue the check.
- If the trouble still occurs even though there are no abnormalities in any of the other circuits, check and replace the ECM.

HINT:

*1: When the circuit on which mark *1 is attached is defective, DTC could be output (see page 05-1 152).

Symptom	Suspected Area	See page
No down-shift (A particular gear, from 1st to 4th gear, is not down-shifted)	1. Shift solenoid valve (SL1) circuit *1 2. Shift solenoid valve (SL2) circuit *1 3. Shift solenoid valve (SL3) circuit *1 4. Shift solenoid valve (SR) circuit *1 5. ECM	05-1180 05-1197 05-1209 05-1192 01-32
No down-shift (5th → 4th)	1. Transmission control switch (O/D OFF) circuit 2. Shift solenoid valve (S4) circuit *1 3. ECM	05-1230 05-1187 01-32
No up-shift (A particular gear, from 1st to 4th gear, is not up-shifted)	1. Shift solenoid valve (SL1) circuit *1 2. Shift solenoid valve (SL2) circuit *1 3. ECM	05-1180 05-1197 01-32
No up-shift (4th → 5th)	1. Transmission control switch (O/D OFF) circuit 2. Shift solenoid valve (S4) circuit *1 3. ECM	05-1230 05-1187 01-32
No lock-up	1. Shift solenoid valve (DSL) circuit *1 2. Stop light switch circuit *1 3. Engine coolant temp. sensor circuit *1 4. ECM	05-1175 05-1172 05-51 05-390 01-32
No lock-up off	1. Shift solenoid valve (DSL) circuit *1 2. ECM	05-1175 01-32
Shift point too high or too low	1. Throttle position sensor circuit *1 2. Shift solenoid valve (SLT) circuit *1 3. ECM	05-51 05-390 05-1223 01-32
Up-shift to 5th from 4th while shift lever is D (O/D OFF) position	1. Transmission control switch (O/D OFF) circuit 2. ECM	05-1230 01-32
Up-shift to 5th from 4th while engine is cold	1. Engine coolant temp. sensor circuit *1 2. ECM	05-51 05-390 01-32
Up-shift to 2nd from 1st while shift lever is L position	1. Transmission control switch (2 ⇔ L position) circuit *1 2. ECM	05-1154 01-32
Harsh engagement (N → D)	1. Shift solenoid valve (SL1) circuit *1 2. ECM	05-1180 01-32
Harsh engagement (Lock-up)	1. Shift solenoid valve (SL2) circuit *1 2. ECM	05-1197 01-32

cardiagn.com

Harsh engagement (Any driving position)	1. Shift solenoid valve (SLT) circuit *1 2. ECM	05-1223 01-32
Poor acceleration	1. Shift solenoid valve (SLT) circuit *1 2. ECM	05-1223 01-32
No kick-down	ECM	01-32
Engine stalls when starting off or stopping	1. Shift solenoid valve (DSL) circuit *1 2. ECM	05-1175 01-32
Malfunction in shifting	1. Park/neutral position switch circuit *1 2. Transmission control switch (O/D OFF) circuit 3. ECM	05-1154 05-1230 01-32

cardiagn.com

2. Chapter 2: On-Vehicle Repair and Off-Vehicle Repair (★: U250E AUTOMATIC TRANSAXLE Repair Manual Pub. No. RM1123U)

Symptom	Suspected Area	See page
Vehicle does not move in forward position and in reverse position	1. Valve body assy 2. U/D brake (B_3) 3. Torque converter clutch	40-42 ★ 40-27
Vehicle does not move in R position	1. Valve body assy 2. Reverse clutch (C_2) 3. 1st & reverse brake (B_2)	40-42 ★ ★
No up-shift (1st → 2nd)	1. Valve body assy 2. 2nd & O/D brake (B_1)	40-42 ★
No up-shift (2nd → 3rd)	1. Valve body assy 2. Direct and O/D clutch (C_0)	40-42 ★
No up-shift (3rd → 4th)	1. Valve body assy 2. 2nd & O/D brake (B_1)	40-42 ★
No up-shift (4th → 5th)	1. Valve body assy 2. U/D clutch (C_3)	40-42 ★
No down-shift (5th → 4th)	Valve body assy	40-42
No down-shift (4th → 3rd)	Valve body assy	40-42
No down-shift (3rd → 2nd)	Valve body assy	40-42
No down-shift (2nd → 1st)	Valve body assy	40-42
No lock-up or No lock-up off	1. Valve body assy 2. Torque converter clutch	40-42 40-27
Harsh engagement (N → D)	1. Valve body assy 2. C_1 accumulator 3. Forward clutch (C_1) 4. One-way clutch No.1 (F_1) 5. U/D one-way clutch (F_2)	40-42 ★ ★ ★ ★
Harsh engagement (Lock-up)	1. Valve body assy 2. Torque converter clutch	40-42 40-27
Harsh engagement (N → R)	1. Valve body assy 2. C_2 accumulator 3. Reverse clutch (C_2) 4. 1st & reverse brake (B_2)	40-42 ★ ★ ★
Harsh engagement (1st →2nd → 3rd → 4th → 5th)	Valve body assy	40-42
Harsh engagement (1st → 2nd)	1. Valve body assy 2. 2nd & O/D brake (B_1)	40-42 ★
Harsh engagement (2nd → 3rd)	1. Valve body assy 2. C_0 accumulator 3. Direct and O/D clutch (C_0)	40-42 ★ ★
Harsh engagement (3rd → 4th)	1. Valve body assy 2. 2nd & O/D brake (B_1)	40-42 ★
Harsh engagement (4th → 5th)	1. Valve body assy 2. C_3 accumulator 3. U/D clutch (C_3)	40-42 ★ ★
Harsh engagement (5th → 4th)	1. Valve body assy 2. B_3 accumulator	40-42 ★

cardiagn.com

Slip or shudder (Forward and reverse: After warm-up)	1. Valve body assy 2. Oil strainer 3. Direct and O/D clutch (C_0) 4. Forward clutch (C_1) 5. U/D clutch (C_3) 6. 2nd & O/D brake (B_1) 7. U/D brake (B_3) 8. One-way clutch No.1 (F_1) 9. U/D one-way clutch (F_2) 10.Torque converter clutch	40-42 40-42 ★ ★ ★ ★ ★ ★ ★ 40-27
Slip or shudder (Particular position: Just after engine starts)	Torque converter clutch	40-27
Slip or shudder (R position)	1. Reverse clutch (C_2) 2. 1st & reverse brake (B_2)	★ ★
Slip or shudder (1st)	1. Forward clutch (C_1) 2. One-way clutch No.1 (F_1) 3. U/D one-way clutch (F_2)	★ ★
Slip or shudder (2nd)	2nd & O/D brake (B_1)	★
Slip or shudder (3rd)	Direct and O/D clutch (C_0)	★
Slip or shudder (4th)	2nd & O/D brake (B_1)	★
Slip or shudder (5th)	U/D clutch (C_3)	★
No engine braking (1st – 4th: D position)	U/D brake (B_3)	★
No engine braking (1st: L (1) position)	1. Valve body assy 2. 1st & reverse brake (B_2)	40-42 ★
No engine braking (2nd: 2 position)	1. Valve body assy 2. 2nd & O/D brake (B_1)	40-42 ★
No engine braking (3rd: 3 position)	U/D brake (B_3)	★
Poor acceleration (All positions)	Torque converter clutch	40-27
Poor acceleration (5th)	1. U/D clutch (C_3) 2. U/D planetary gear unit	★ ★
Engine stalls when starting off or stopping	Torque converter clutch	40-27
No kick-down	Valve body assy	40-42

cardiagn.com

05FC5-03

TERMINALS OF ECM

1. ECM

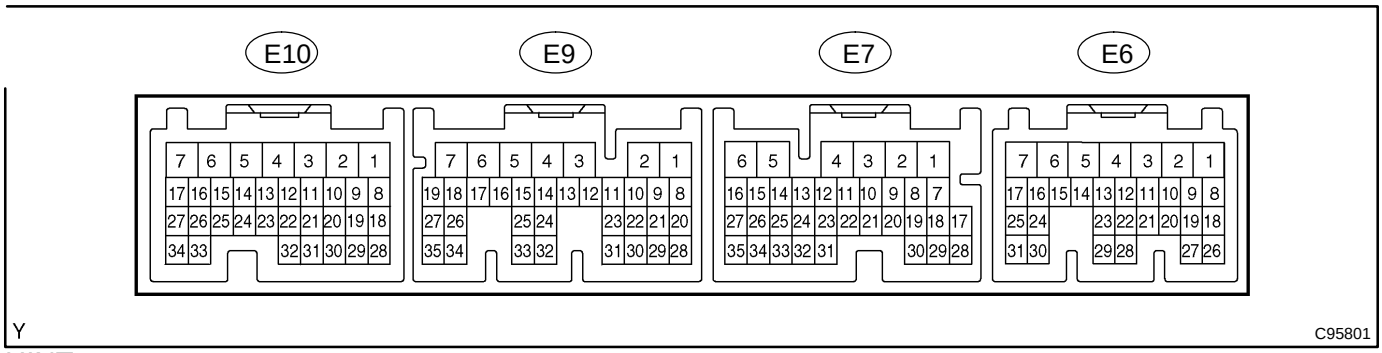

HINT:

Each ECM terminal's standard voltage is shown in the table below.

In the table, first follow the information under "Condition". Look under "Symbols (Terminal No.)" for the terminals to be inspected. The standard voltage between the terminals is shown under "Specific Condition".

Use the illustration above as a reference for the ECM terminals.

Symbols (Terminals No.)	Wiring Color	Terminal Description	Condition	Specified Condition
L (E7-9) - E1 (E10-3)	L-B - BR	L shift position switch signal	IG switch ON and shift lever L position	10 to 14 V
↑	↑	↑	IG switch ON and shift lever except L position	Below 1 V
2 (E7-10) - E1 (E10-3)	Y - BR	2 shift position switch signal	IG switch ON and shift lever 2 and L position	10 to 14 V
↑	↑	↑	IG switch ON and shift lever except 2 and L position	Below 1 V
D (E7-21) - E1 (E10-3)	W-L - BR	D shift position switch signal	IG switch ON and shift lever D and O/D OFF position	10 to 14 V
↑	↑	↑	IG switch ON and shift lever except D and O/D OFF position	Below 1 V
R (E7-11) - E1 (E10-3)	R-B - BR	R shift position switch signal	IG switch ON and shift lever R position	10 to 14 V
↑	↑	↑	IG switch ON and shift lever except R position	Below 1 V
SPD (E7-8) - E1 (E10-3)	V-W - BR	Speed signal	Vehicle speed 20 km/h (12 mph)	Pulse generation 8 reference
STP (E7-4) - E1 (E10-3)	G-W - BR	Stop lamp switch signal	Brake pedal is depressed	7.5 to 14 V
↑	↑	↑	Brake pedal is released	Below 1.5 V
3 (E7-19) - E1 (E10-3)	L-W - BR	3 shift position switch signal	IG switch ON and shift lever 3 position	10 to 14 V
↑	↑	↑	IG switch ON and shift lever except 3 position	Below 1 V
NSW (E6-30) - E1 (E10-3)	B-Y - BR	Park neutral switch signal	IG switch ON and shift lever P and N position	Below 2 V
↑	↑	↑	IG switch ON and shift lever except P and N position	10 to 14 V
DSL (E9-9) - E1 (E10-3)	Y - BR	DSL solenoid signal	Vehicle speed 65 km/h (40 mph), lock-up (ON to OFF)	Pulse generation 2 reference

cardiagn.com

SR (E9-19) - E1 (E10-3)	GR - BR	SR solenoid signal	IG switch ON	Below 1 V
↑	↑	↑	3rd, 4th or 5th gear	10 to 14 V
↑	↑	↑	1st or 2nd gear	Below 1 V
ODMS (E7-6) - E1 (E10-3)	G-O - BR	O/D main switch	IG switch ON	10 to 14 V
↑	↑	↑	IG switch ON and press continuously O/D main switch	Below 1 V
ODLP (E7-7) - E1 (E10-3)	O - BR	O/D off indicator lamp	O/D main switch ON (O/D OFF)	Below 3 V
↑	↑	↑	O/D main switch OFF (O/D ON)	9 to 14 V
S4 (E9-8) - E1 (E10-3)	L - BR	S4 solenoid signal	IG switch ON	Below 1 V
↑	↑	↑	5th gear	10 to 14 V
↑	↑	↑	Except 5th gear	Below 1 V
SL3+ (E9-16) - SL3- (E9-17)	G-B - G-R	SL3 solenoid signal	Engine idle speed	Pulse generation 3 reference
SL2+ (E9-14) - SL2- (E9-15)	L-Y - L-R	SL2 solenoid signal	Engine idle speed	Pulse generation 4 reference
SL1+ (E9-11) - SL1- (E9-10)	R-B - P	SL1 solenoid signal	Engine idle speed	Pulse generation 5 reference
NC+ (E9-34) - NC- (E9-26)	R - G	Speed sensor (NC) signal	Vehicle speed 30 km/h (19 mph): (3rd gear) Engine speed 1,400 rpm	Pulse generation 6 reference
NT+ (E9-35) - NT- (E9-27)	L - LG	Speed sensor (NT) signal	Vehicle speed 20 km/h (12 mph)	Pulse generation 7 reference
SLT+ (E9-12) - SLT- (E9-13)	Y-R - Y-B	SLT solenoid signal	Engine idle speed	Pulse generation 1 reference
THO1 (E9-24) - E2 (E10-28)	G - BR	ATF temperature sensor signal	ATF temperature: 115 ✶C (239 ✶F) or more	Below 1.5 V

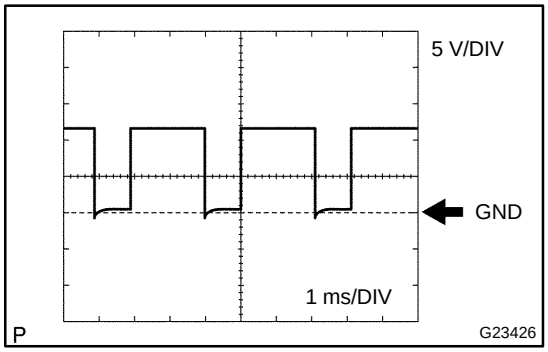

Pulse generation 1

Reference:

Terminal	SLT+ - SLT-
Tool setting	5V/DIV, 1ms/DIV
Vehicle condition	Engine idle speed

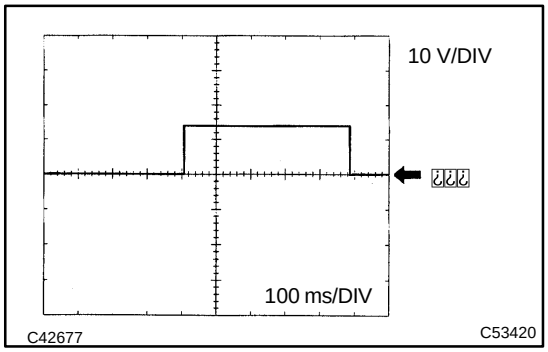

Pulse generation 2

Reference:

Terminal	DSL - E1
Tool setting	10V/DIV, 100ms/DIV
Vehicle condition	Vehicle speed 65 km/h (40 mph), lock-up (ON to OFF)

cardiagn.com

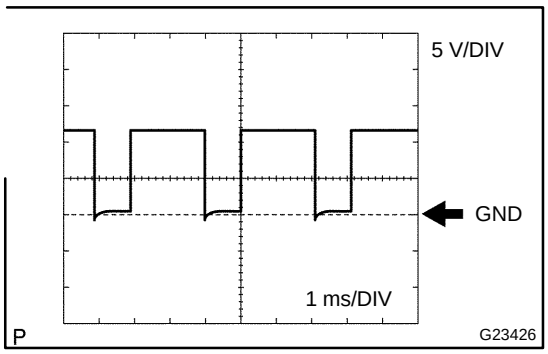

Pulse generation 3

Reference:

Terminal	SL3+ - SL3-
Tool setting	5V/DIV, 1ms/DIV
Vehicle condition	Engine idle speed

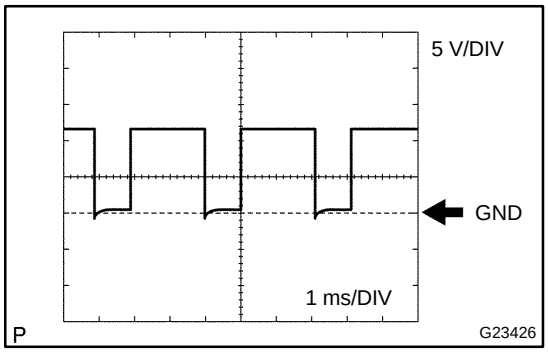

Pulse generation 4

Reference:

Terminal	SL2+ - SL2-
Tool setting	5V/DIV, 1ms/DIV
Vehicle condition	Engine idle speed

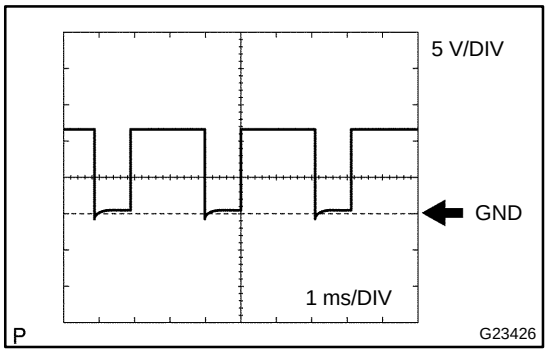

Pulse generation 5

Reference:

Terminal	SL1+ - SL1-
Tool setting	5V/DIV, 1ms/DIV
Vehicle condition	Engine idle speed

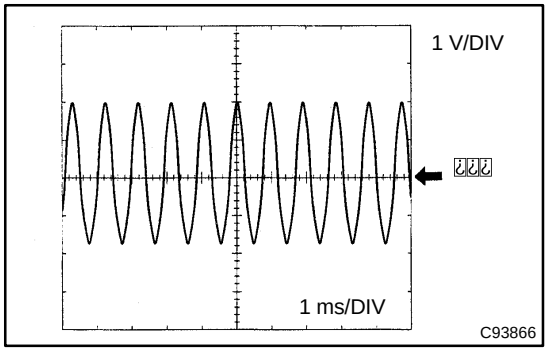

Pulse generation 6

Reference:

Terminal	NC+ - NC-
Tool setting	1V/DIV, 1ms/DIV
Vehicle condition	Vehicle speed 30 km/h (19 mph): (3rd gear) Engine speed 1,400 rpm

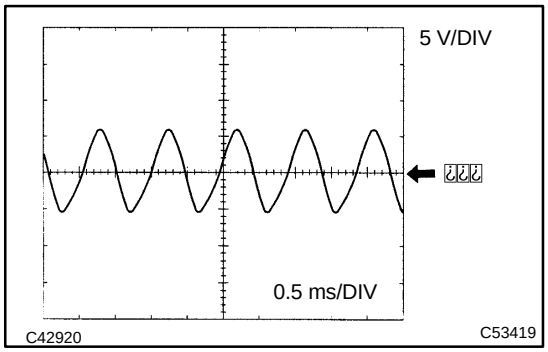

Pulse generation 7

Reference:

Terminal	NT+ - NT-
Tool setting	5V/DIV, 0.5ms/DIV
Vehicle condition	Vehicle speed 20 km/h (12 mph)

cardiagn.com

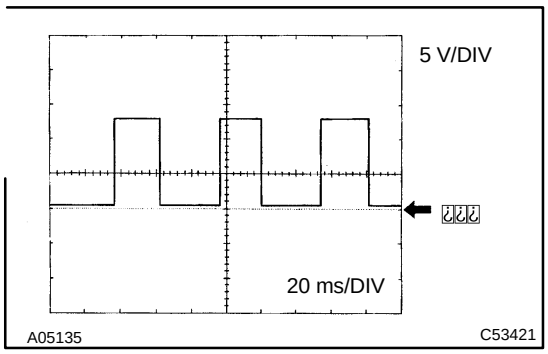

Pulse generation 8

Reference:

Terminal	SPD - E1
Tool setting	5V/DIV, 20ms/DIV
Vehicle condition	Vehicle speed 20 km/h (12 mph)

cardiagn.com