2004 BRAKES

ABS With EBD & BA & TRAC & VSC System - Diagnostics - RAV4

HOW TO PROCEED WITH TROUBLESHOOTING

Troubleshoot in accordance with the procedure.

cardiagn.com

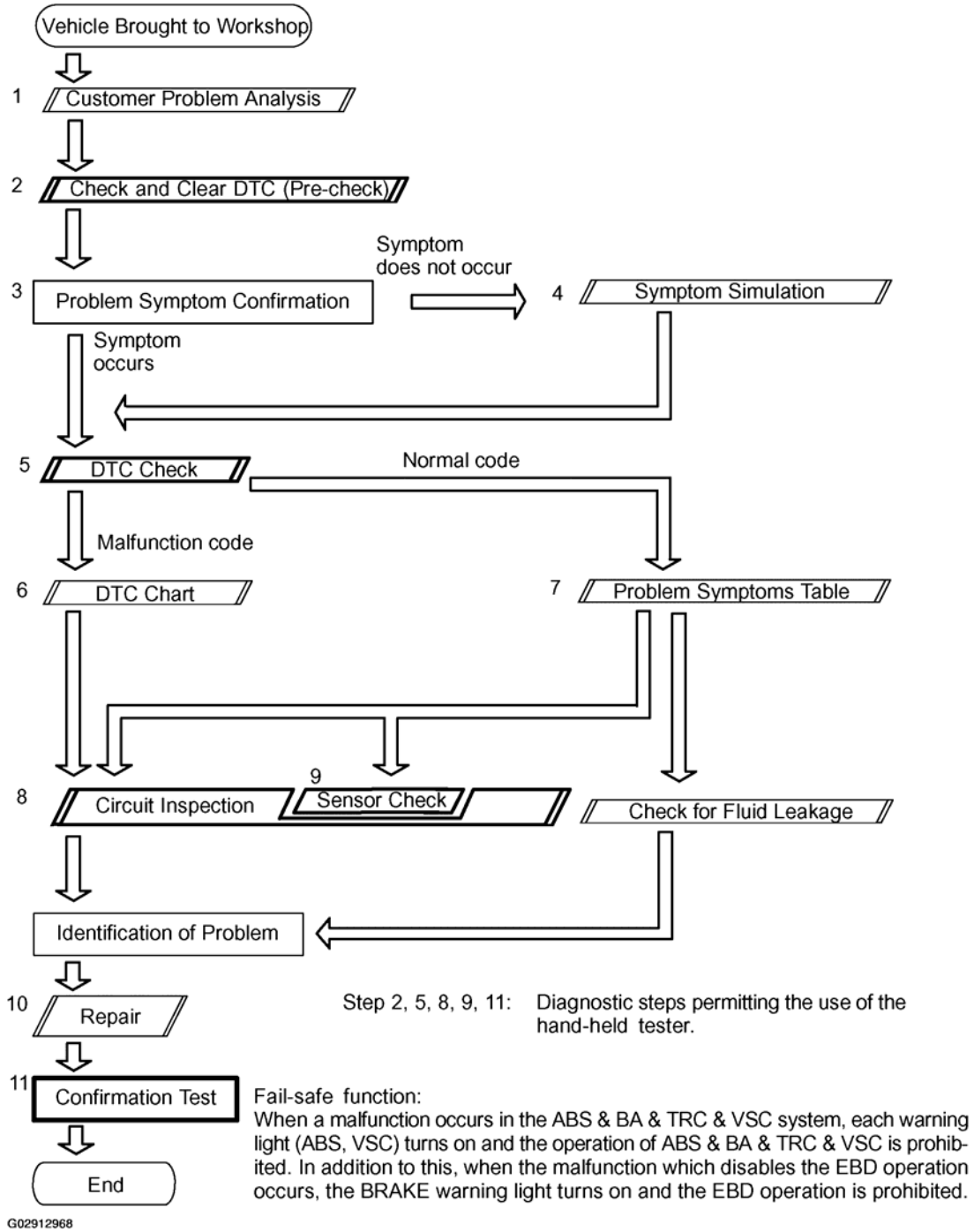

Fig. 1: Troubleshooting Flow Chart
Courtesy of TOYOTA MOTOR SALES, U.S.A., INC.

CUSTOMER PROBLEM ANALYSIS CHECK

cardiagn.com

ABS WITH EBD & BA SYSTEM Check Sheet

Inspector's Name :

Customer's Name		**VIN**	
		Production Date	/ /
		License Plate No.	
Date Vehicle Brought in	/ /	**Odometer Reading**	km miles

Date Problem First Occurred	/ /
Frequency Problem Occurs	☐ Continuously ☐ Intermittently (times a day)

Symptoms	☐ ABS does not operate.	
	☐ ABS does not operate efficiently.	
	☐ BA does not operate.	
	☐ EBD does not operate.	
	ABS Warning Light Abnormal	☐ Remains ON ☐ Does not Light Up
	Brake Warning Light Abnormal (PKB released)	☐ Remains ON ☐ Does not Light Up

DTC Check	**1st Time**	☐ Normal Code ☐ Malfunction Code (Code)
	2nd Time	☐ Normal Code ☐ Malfunction Code (Code)

Freeze Frame Data	STOP LIGHT SW	☐ ON ☐ OFF
	SYSTEM	☐ NO SYS ☐ ABS ☐ BA ☐ FAIL SF
	#IG ON	
	VEHICLE SPD	km/h MPH

G02912969

Fig. 2: Customer Problem Analysis Check Sheet (ABS & EBD & BA System)
Courtesy of TOYOTA MOTOR SALES, U.S.A., INC.

cardiagn.com

TRAC & VSC SYSTEM Check Sheet

Inspector's Name :

Customer's Name		**VIN**	
		Production Date	/ /
		License Plate No.	
Date Vehicle Brought in	/ /	**Odometer Reading**	km miles

Date Problem First Occurred	/ /
Frequency Problem Occurs	☐ Continuous ☐ Intermittent (times a day)

Symptoms	☐ TRAC does not operate (wheels spin when starting rapidly)	
	☐ VSC does not operate (wheels sideslip at the time of sharp turning)	
	TRAC OFF Indicator Light Abnormal	☐ Remains ON ☐ Does Not Light Up
	VSC Warning Abnormal	☐ Displays ☐ Does Not Display
	Slip Indicator Light Abnormal	☐ Remains ON ☐ Does Not Light Up
	VSC Warning Buzzer Abnormal	☐ Sounds ☐ Does Not Sound

Check Item	**ABS Warning Light**	☐ Normal ☐ Malfunction Code (Code)
	MIL	☐ Normal ☐ Malfunction Code (Code)

DTC Check	**1st Time**	☐ Normal Code ☐ Malfunction Code (Code)
	2nd Time	☐ Normal Code ☐ Malfunction Code (Code)

Freeze Frame Data	VSC/TRAC OFF SW	☐ ON ☐ OFF
	SYSTEM	☐ VSC/TRAC
	SHIFT POSITION	☐ P,N ☐ 2 ☐ R ☐ 3 ☐ D ☐ 4 ☐ L ☐ FAIL
	STEERING ANG	deg
	YAW RAT	deg/s
	MAS CYL PRESS	V
	THROTTLE	deg
	MAS PRESS GRADE	MPa/s
	G (RIGHT&LEFT)	G
	G (BACK&FORTH)	G

G02912970

Fig. 3: Customer Problem Analysis Check Sheet (TRAC & VSC System)

cardiagn.com

Courtesy of TOYOTA MOTOR SALES, U.S.A., INC.

PRE-CHECK

1. **DIAGNOSIS SYSTEM**
   a. Check the warning lights.
      1. Release the parking brake pedal.
      2. When the ignition switch is turned ON, check that the ABS warning light, VSC warning light, TRAC OFF indicator light, brake warning light and slip indicator light comes on for approx. 3 seconds.

         HINT:

         - When the parking brake is applied or the level of the brake fluid is low, the brake warning light comes on.
         - If the indicator check result is not normal, proceed to troubleshooting for the ABS warning light circuit, TRAC warning light circuit, TRAC OFF indicator light circuit, brake warning light circuit or slip indicator light circuit.

cardiagn.com

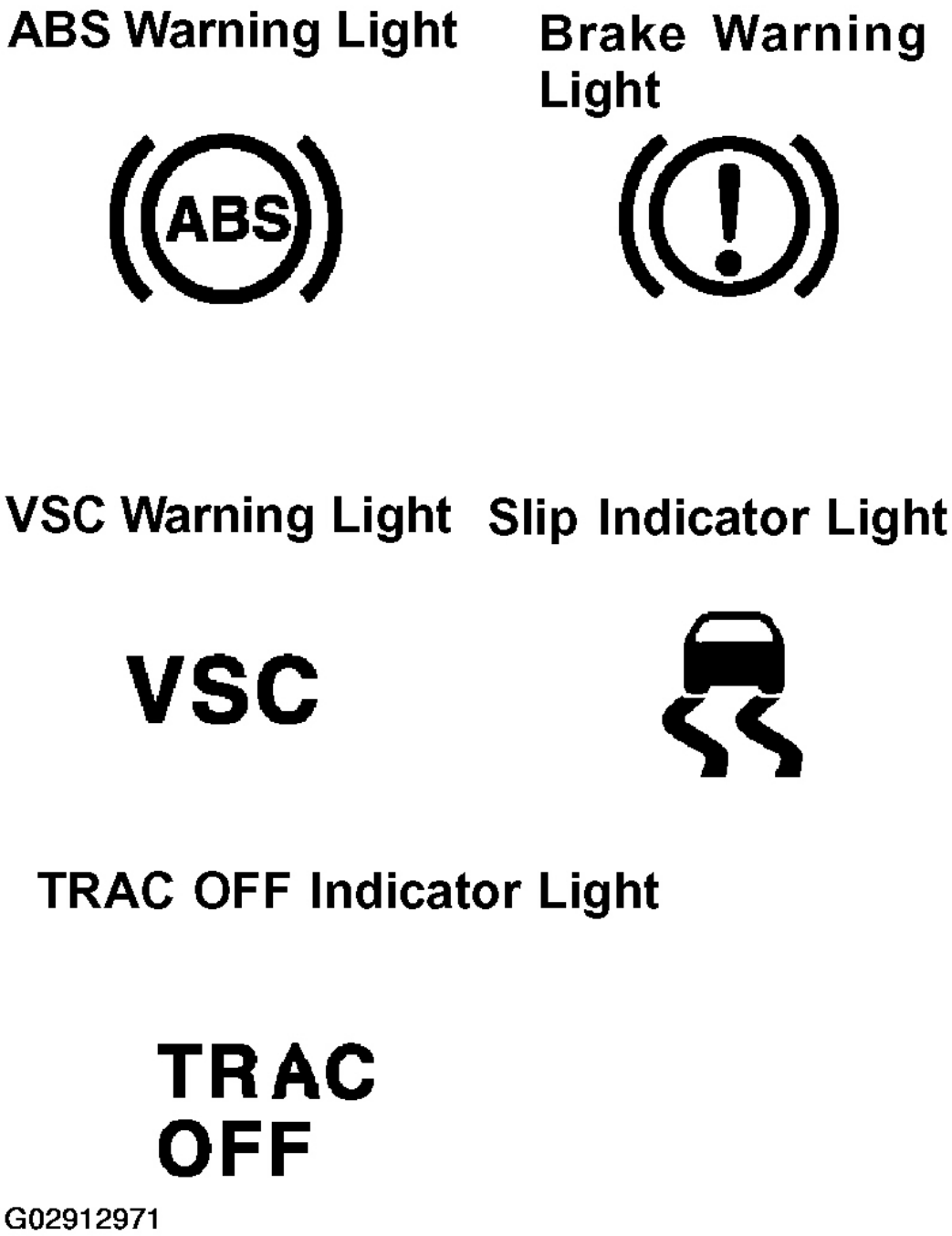

Fig. 4: Identifying Warning Lights
Courtesy of TOYOTA MOTOR SALES, U.S.A., INC.

WARNING LIGHT TROUBLE AREAS

cardiagn.com

Trouble Area	See
ABS warning light circuit	**ABS Warning Light Circuit (Does not light up)**
VSC warning light circuit	**VSC Warning Light Circuit (Does not light up)**
TRAC OFF indicator light circuit	**TRAC OFF Indicator Light, TRAC OFF Switch Circuit**
Brake warning light circuit	**Brake Warning Light Circuit**
Slip indicator light circuit	**Slip Indicator Light Circuit**

b. When not using the hand-held tester:

Check the DTC.

1. Using SST, connect terminals TC and CG of the DLC3.

   SST 09843-18040

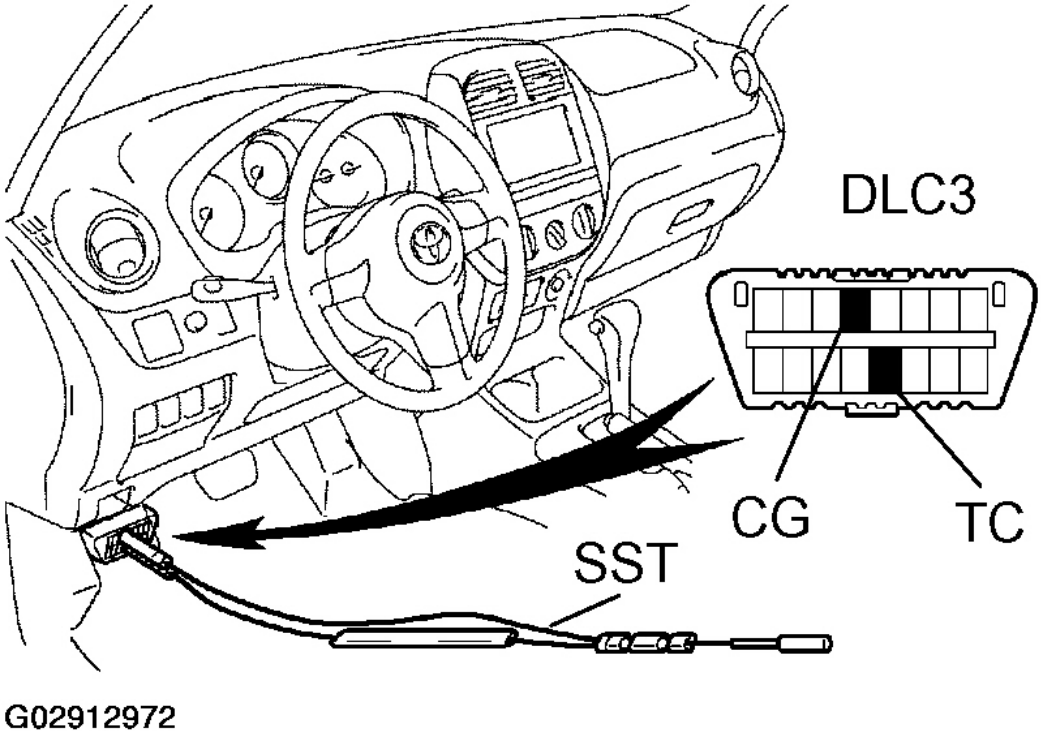

Fig. 5: Connecting Terminals TC & CG of DLC3 Using SST
Courtesy of TOYOTA MOTOR SALES, U.S.A., INC.

2. Turn the ignition switch ON.

cardiagn.com

3. Read the DTC from the ABS warning light and VSC warning light on the combination meter.

   HINT:

   - If no code appears, inspect the diagnostic circuit, ABS warning light circuit or VSC warning light circuit.

     WARNING LIGHT TROUBLE AREAS

Trouble Area	See
TC terminal circuit	**TC Terminal Circuit**
ABS warning light circuit	**ABS Warning Light Circuit (Does not light up)**
VSC warning light circuit	**VSC Warning Light Circuit (Does not light up)**

   - As an example, the blinking patterns for normal code and codes 11 and 21 are shown in **Fig. 6** .
4. Codes are explained in **DIAGNOSTIC TROUBLE CODE CHART** .
5. After completing the check, disconnect terminals TC and CG of the DLC3, and turn off the display.

   If 2 or more malfunction codes are identified at the same time, the DTC will be displayed in ascending order.

cardiagn.com

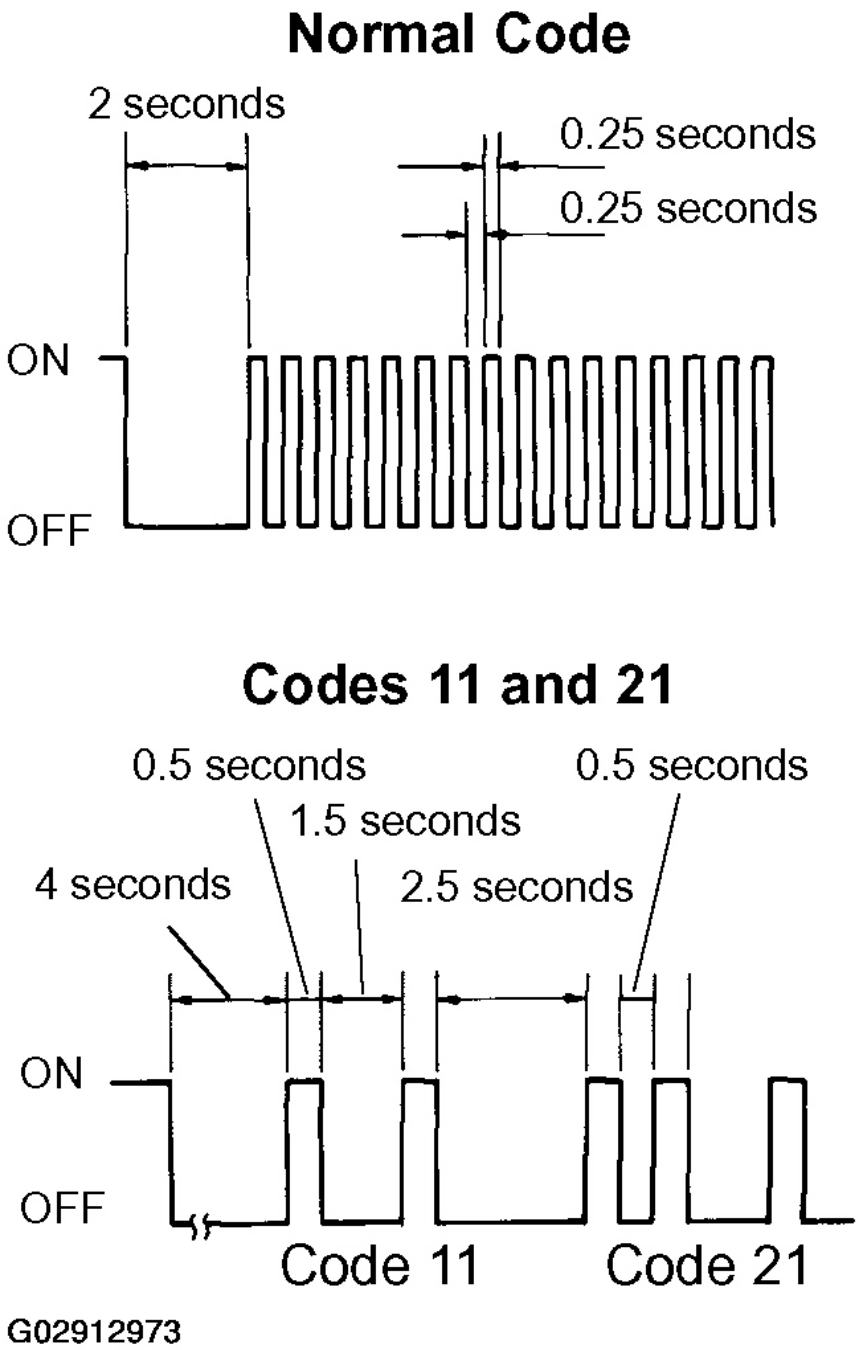

Fig. 6: Reading DTC Codes
Courtesy of TOYOTA MOTOR SALES, U.S.A., INC.

c. When not using the hand-held tester:

cardiagn.com

Clear the DTC.

1. Using SST, connect terminals TC and CG of the DLC3.

   SST 09843-18040

2. Turn the ignition switch ON.
3. Clear the DTC stored in the ECU by depressing the brake pedal 8 times or more within 5 seconds.
4. Check that the warning light indicates the normal code.
5. Remove the SST from the terminals of the DLC3.

   SST 09843-18040

cardiagn.com

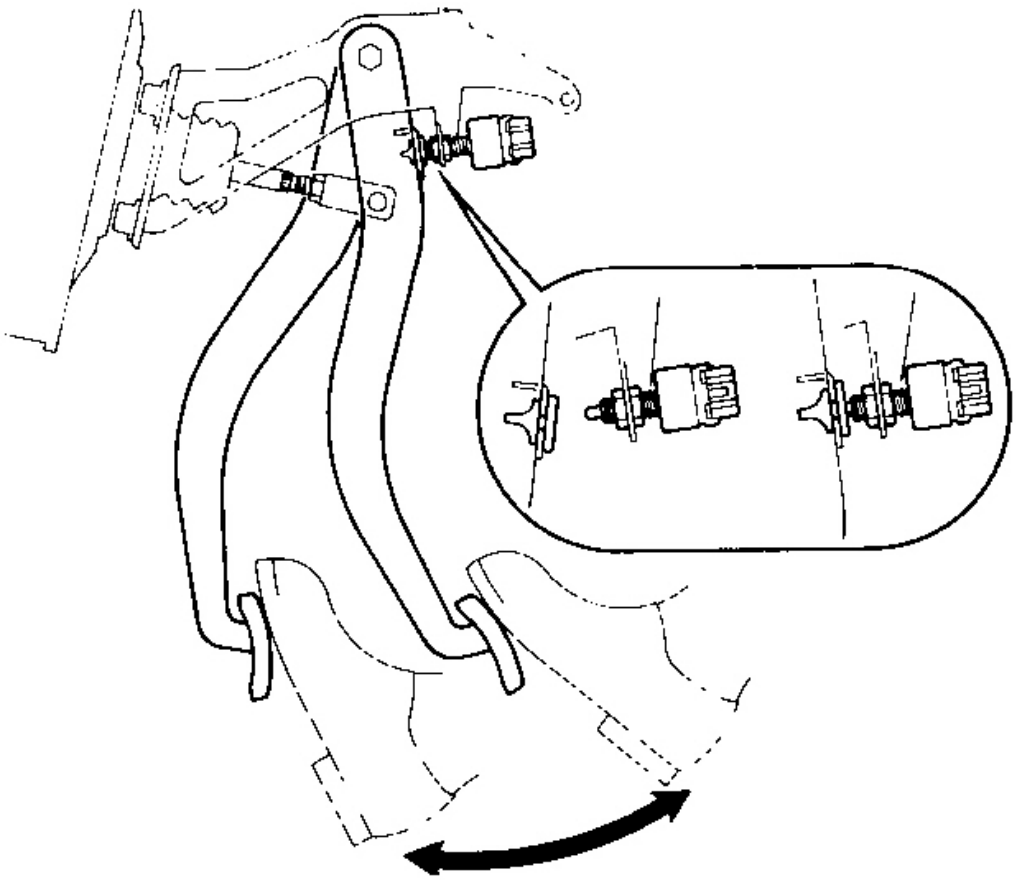

Fig. 7: Inspecting Brake Switch
Courtesy of TOYOTA MOTOR SALES, U.S.A., INC.

HINT:

Cancellation cannot be performed by removing the battery cable or ECU-IG fuse.

d. When using the hand-held tester:

Check the DTC.

1. Connect hand-held tester to the DLC3.

cardiagn.com

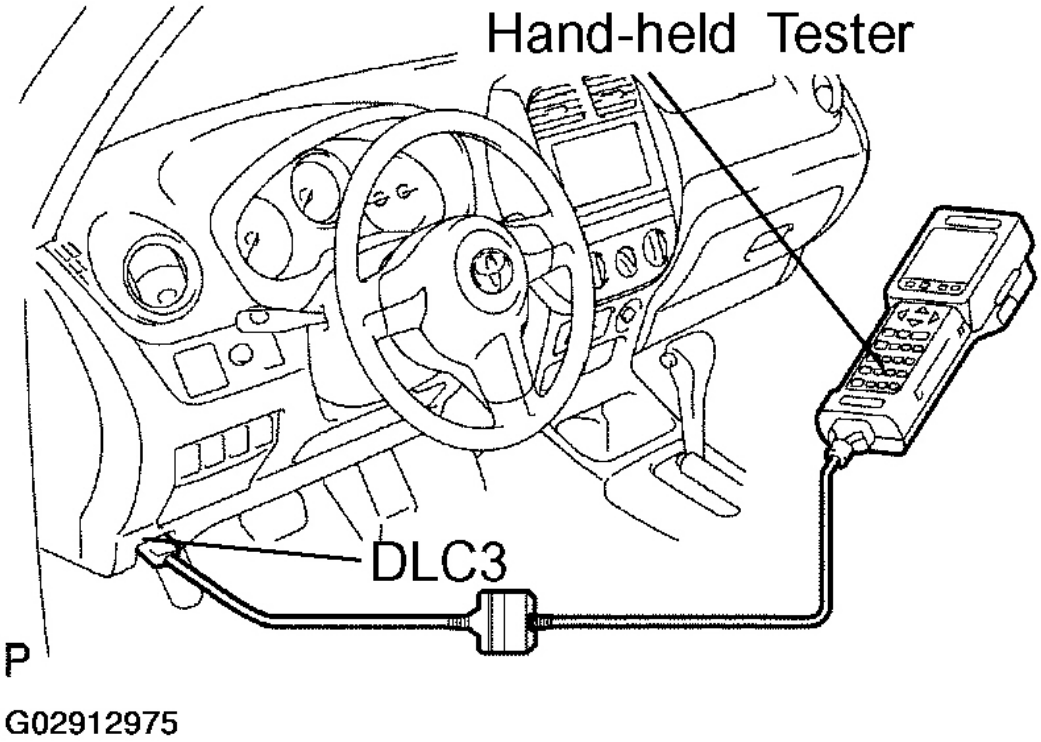

Fig. 8: Connecting Hand-Held Tester to DLC3
Courtesy of TOYOTA MOTOR SALES, U.S.A., INC.

2. Turn the ignition switch ON.
3. Read the DTC by following the prompts on the tester screen.

   HINT:

   Refer to the hand-held tester operator's manual for further details.

e. When using the hand-held tester:

   Clear the DTC.

   1. Connect the hand-held tester to the DLC3.

cardiagn.com

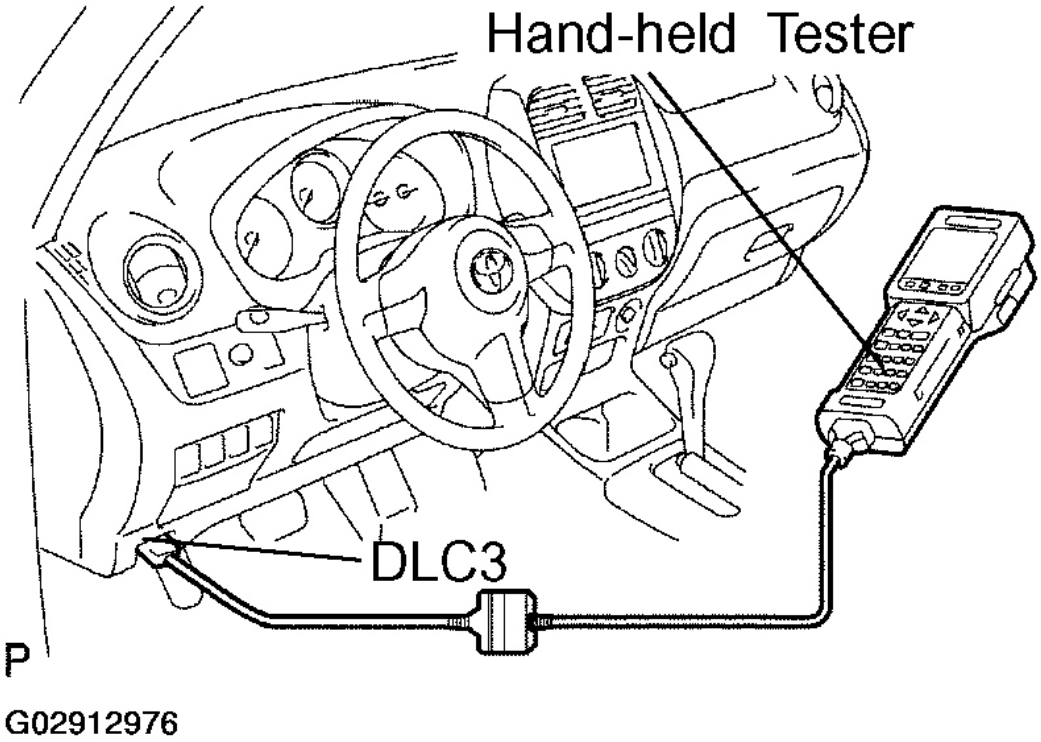

Fig. 9: Connecting Hand-Held Tester to DLC3
Courtesy of TOYOTA MOTOR SALES, U.S.A., INC.

2. Turn the ignition switch ON.
3. Operate the hand-held tester to erase the codes.

   HINT:

   Refer to the hand-held tester operator's manual for further details.

2. **DATA LIST**

HINT:

According to the DATA LIST displayed by the hand-held tester, you can read the value of the switch, sensor, actuator and so on without removing any parts. Reading the DATA LIST as a first step of troubleshooting is one of the method to shorten the labor time.

a. Connect the hand-held tester to the DLC3.
b. Turn the ignition switch ON.

cardiagn.com

c. Read the "DATA LIST" on the tester.

Item	Measurement Item/Range (Display)	Normal Condition*	Diagnostic Note
ABS MOT RELAY	Motor relay status/ ON or OFF	-	-
SOL RELAY	Solenoid relay status/ ON or OFF	-	-
VSC/TRAC OFF SW	VSC OFF switch/ ON or OFF	-	-
IDLE SW	Main idle switch/ ON or OFF	ON: Accelerator pedal released OFF: Accelerator pedal depressed	-
STOP LIGHT SW	Stop light switch/ ON or OFF	OFF: Brake pedal released ON: Brake pedal depressed	-
PKB SW	PKB sw/ ON or OFF	ON: Parking brake applied OFF: Parking brake released	-
ABS OPERT FR	Front right wheel operation/ BEFORE or OPERATE	BEFORE: No ABS operation (FR) OPERATE: During ABS operation (FR)	-
ABS OPERT FL	Front left wheel operation/ BEFORE or OPERATE	BEFORE: No ABS operation (FL) OPERATE: During ABS operation (FL)	-
ABS OPERT RR	Rear right wheel operation/ BEFORE or OPERATE	BEFORE: No ABS operation (RR) OPERATE: During ABS operation (RR)	-
ABS OPRET RL	Rear left wheel operation/ BEFORE or OPERATE	BEFORE: No ABS operation (RL) OPERATE: During ABS operation (RL)	-
WHEEL SPD FR	Front right wheel speed / Min.: 0 km/h, Max.: 326.4 km/h	Actual wheel speed	Speed indicated on speedometer
WHEEL SPD FL	Front left wheel speed/ Min.: 0 km/h, Max.: 326.4 km/h	Actual wheel speed	Speed indicated on speedometer
WHEEL SPD RR	Rear right wheel speed/ Min.: 0 km/h, Max.: 326.4 km/h	Actual wheel speed	Speed indicated on speedometer
WHEEL SPD RL	Rear left wheel speed/ Min.: 0 km/h, Max.: 326.4 km/h	Actual wheel speed	Speed indicated on speedometer

G02912977

Fig. 10: Data List Table (1 Of 2)
Courtesy of TOYOTA MOTOR SALES, U.S.A., INC.

cardiagn.com

DECELERAT SENS	G sensor (GL1 filter)/ Min.: -1.869 G, Max.: 1.869	Approximately 0 ± 0.13 G at still condition	Reading changes when vehicle is bounced
DECELERAT SENS2	G sensor (GL2 filter)/ Min.: -1.869 G, Max.: 1.869	Approximately 0 ± 0.13 G at still condition	Reading changes when vehicle is bounced
IG VOLTAGE	ECU IG power voltage/ UNDER or NORMAL or OVER	NORMAL: 9.5 V or more TOO LOW: Below 9.5 V	-
SFRR	SFRR/ ON or OFF	-	-
SFRH	SFRH/ ON or OFF	-	-
SFLR	SFLR/ ON or OFF	-	-
SFLH	SFLH/ ON or OFF	-	-
SRRR (SRR)	SRRR (SRR)/ ON or OFF	-	-
SRRH (SRH)	SRRH (SRH)/ ON or OFF	-	-
SRLR	SRLR/ ON or OFF	-	-
SRLH	SRLH/ ON or OFF	-	-
SMF (BA-SOL)	SMF (BA-SOL)/ ON or OFF	-	-
SMR	SMR / ON or OFF	-	-
ENGINE SPD	Engine Speed/ Min.: 0 rpm, Max.: 6000 rpm	Idling: (M/T) 600 to 700 rpm (A/T) 650 to 750 rpm	-
VEHICLE SPD	Maximum wheel speed sensor reading / Min.: 0 km/h (0 mph) Max.: 326 km/h (202 mph)	Actual vehicle speed	-
YAW RATE	Yaw rate sensor/ Min.: -128 deg/s, Max.: 128 deg/s	Min.: -128 deg/s Max.: 128 deg/s	-
YAW ZERO VALUE	Memorized zero value/ Min.: -128 deg/s, Max.: 128 deg/s	Min.: -128 deg/s Max.: 128 deg/s	-
STEERING ANG	Steering sensor/ Min.: -1152 deg, Max.: 1150.875 deg	Min.: -1152 deg, Max.: 1150.875 deg	-
MAS CYL PRS 1	Master cylinder pressure 1/ Min.: 0 V, Max.: 5 V	When brake pedal is released: 0.3 to 0.9 V	Reading increases when brake pedal is depressed
AIR BLD SUPPORT	Air bleed support/ NOT SUP or SUPPORT	w/ BA: Supported w/ VSC: Not supported	-
SPD SEN FR	FR speed sensor open detection/ OPN DET/NORMAL	NORMAL	-
SPD SEN FL	FL speed sensor open detection/ OPN DET/NORMAL	NORMAL	-
SPD SEN RR	RR speed sensor open detection/ OPN DET/NORMAL	NORMAL	-
SPD SEN RL	RL speed sensor open detection/ OPN DET/NORMAL	NORMAL	-
EFI COM	EFI communication open detection/ OPN DET/NORMAL	NORMAL	-
YAWRATE SEN	Yaw rate sensor open detection/ OPN DET/NORMAL	NORMAL	-
DECELE SEN	Deceleration sensor open detec-tion/ OPN DET/NORMAL	NORMAL	-
STEERING SEN	Steering sensor open detection/ OPN DET/NORMAL	NORMAL	-
TEST MODE	Test mode operation/ NORMAL or TEST	NORMAL: Normal mode TEST: During test mode	-
#CODES	Number of Trouble Code/ Min.: 0, Max.: 255	Min.: 0, Max.: 37	-

G02912978

cardiagn.com

Fig. 11: Data List Table (2 Of 2)
Courtesy of TOYOTA MOTOR SALES, U.S.A., INC.

3. **ACTIVE TEST**

HINT:

Performing the ACTIVE TEST using the hand-held tester allows the relay, VSV, actuator and so on to operate without removing any parts. Performing the ACTIVE TEST as a first step of troubleshooting is one of the methods to reduce troubleshooting time.

It is possible to display the DATA LIST during the ACTIVE TEST.

a. Connect the hand-held tester to the DLC3.
b. Turn the ignition switch ON.
c. Perform the "ACTIVE TEST", according to the display on the tester.

HINT:

Ignition switch must be turned ON to proceed to Active Test using a hand-held tester.

ACTIVE TEST

Item	Test Details	Diagnostic Note
SFRR	Turns ABS solenoid (SFRR) ON / OFF	Operation of solenoid (clicking sound) can be heard
SFRH	Turns ABS solenoid (SFRH) ON / OFF	Operation of solenoid (clicking sound) can be heard
SFLR	Turns ABS solenoid (SFLR) ON / OFF	Operation of solenoid (clicking sound) can be heard
SFLH	Turns ABS solenoid (SFLH) ON / OFF	Operation of solenoid (clicking sound) can be heard
SRRR	Turns ABS solenoid (SRRR) ON / OFF	Operation of solenoid (clicking sound) can be heard
SRRH	Turns ABS solenoid (SRRH) ON / OFF	Operation of solenoid (clicking sound) can be heard
SRLR	Turns ABS solenoid (SRLR) ON / OFF	Operation of solenoid (clicking sound) can be heard
SRLH	Turns ABS solenoid (SRLH) ON / OFF	Operation of solenoid (clicking sound) can be heard
SMF (BA-SOL)	Turns ABS solenoid (SMF) ON / OFF	Operation of solenoid (clicking sound) can be heard
SMR	Turns ABS solenoid (SRMR) ON / OFF	Operation of solenoid (clicking sound) can be heard
SOL RELAY	Turns ABS solenoid relay ON/OFF	Operation of solenoid (clicking sound) can be heard

cardiagn.com

ABS MOT RELAY	Turns ABS motor relay ON/OFF	Operation of motor (clicking sound) can be heard
ABS WARN LIGHT	Turns ABS warning light ON / OFF	Observe combination meter
VSC WARN LIGHT	Turns VSC warning light ON / OFF	Observe combination meter
VSC/ TRAC OFF IND	Turns VSC / TRAC OFF indicator ON / OFF	Observe combination meter
SLIP INDI LIGHT	Turns slip indicator light ON / OFF	Observe combination meter
BRAKE WRN LIGHT	Turns brake warning light ON / OFF	Observe combination meter
VSC/BR WARN BUZ	Turns VSC / brake warning buzzer ON / OFF	Buzzer can be heard

4. **FREEZE FRAME DATA**

HINT:

- Whenever a DTC is detected or the ABS operates, the skid control ECU stores the current vehicle (sensor) state as freeze frame data.
- The skid control ECU stores the number of times (maximum: 31) the ignition switch has been turned from OFF to ON since the last time ABS was activated. However, if the vehicle was stopped or driver at low speed (7 km/h (4.3 mph) or less), or if a DTC is detected, the skid control ECU will not count the number since then.
- Freeze frame data at the time the ABS operates:

  The skid control ECU stores and updates data whenever the ABS system operates.

  When the ECU stores data at the time a DTC is detected, the data stored when the ABS operated is erased.

- Freeze frame data at the time a DTC is detected:

  When the skid control ECU stores data at the time a DTC is detected, no updates will be performed until the data is cleared.

a. Connect the hand-held tester to the DLC3.
b. Turn the ignition switch to the ON position.
c. From the display on the tester, select the "FREEZE FRAME DATA".

cardiagn.com

Hand-held Tester Display	Measurement Item	Reference Value
VEHICLE SPD	Wheel speed sensor reading	Speed indicated on speedometer
STOP LIGHT SW	Stop light switch signal	Stop light switch ON: ON, OFF: OFF
# IG ON	Number of operations of ignition switch ON after memorizing freeze frame data	0 to 31
MAS CYL PRESS	Master cylinder pressure sensor reading	Brake pedal release : 0.3 to 0.9 V Brake pedal depress: 0.8 to 4.5 V
MASS PRESS GRADE	Master cylinder pressure sensor change	-30 to 200 MPa/s
SYSTEM	System status	ABS activated: ABS VSC/TRAC activated: VSC/TRAC BA activated: BA Fail safe mode activated: FAIL SF No system activated: NO SYS
YAW RATE	Yaw rate angle sensor reading	-100 to 100
STEERING ANG	Steering sensor reading	Left turn: Increase Right turn: Decrease
THROTTLE	Throttle position sensor reading	Release accelerator pedal: Approx. 0 deg. Depress accelerator pedal: Approx. 90 deg.
G (RIGHT & LEFT)	Right and left G	-1.869 to 1.869
G (BACK & FORTH)	Back and forth G	-1.869 to 1.869
VSC (TRAC) OFF SW	VSC OFF switch signal	TRAC OFF SW ON: ON OFF: OFF
SHIFT POSITION	Shift lever position	FAIL P, N R D 4 3 2 L

G02912979

Fig. 12: Freeze Frame Data Table
Courtesy of TOYOTA MOTOR SALES, U.S.A., INC.

5. **When not using hand-held tester: ABS SENSOR SIGNAL CHECK (TEST MODE)**

NOTE: **When having replaced the yaw rate sensor, deceleration sensor and/or ECU, perform zero point calibration of the yaw rate and deceleration sensors (see step 9).**

HINT:

If the ignition switch is turned from ON to ACC or LOCK during test mode, DTC will be erased.

a. Procedures for test mode:
   1. Turn the ignition switch OFF.
   2. Move the shift lever to the P position.
   3. Using SST, connect terminals TS and CG of the DLC3.

      SST 09843-18040

cardiagn.com

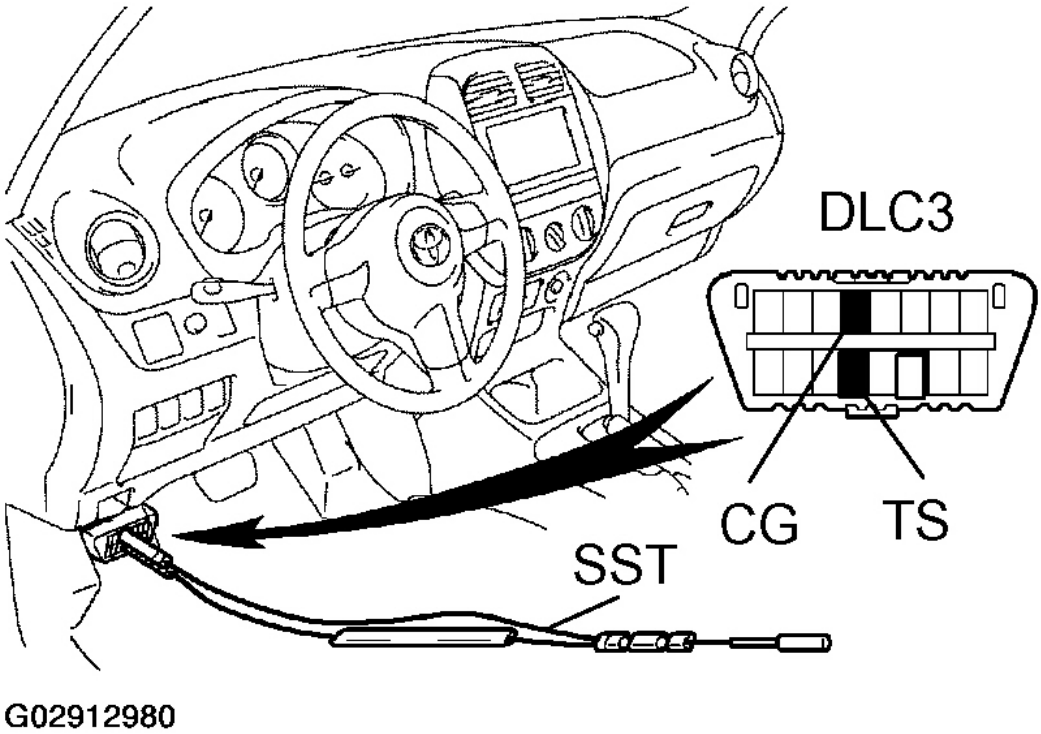

Fig. 13: Connecting Terminals TS & CG of DLC3 Using SST
Courtesy of TOYOTA MOTOR SALES, U.S.A., INC.

4. Check that the steering wheel is in the straight-ahead position.
5. Turn the ignition switch ON.
6. Check that the ABS warning light blinks.

HINT:

If the ABS warning light does not blink, inspect the ABS warning light circuit or Ts terminal circuit.

WARNING LIGHT TROUBLE AREA

Trouble Area	See
Ts terminal circuit	**TS Terminal Circuit**
ABS warning light circuit	**ABS Warning Light Circuit (Does not light up)**

b. Check the brake pedal load sensing switch.
   1. By pumping the brake pedal, release the booster vacuum.
   2. Turn the ignition switch to ON (do not start the engine) and keep depressing the brake pedal

cardiagn.com

for 1 seconds or more with a force of approximately 59 N (6 kgf, 14 lbf) or more.

3. Check that the brake warning light is illuminated and the operating sound of the ABS motor is heard.
4. Start the engine and depress the brake pedal with a force of approximately 59 N (6 kgf, 14 lbf) or more.
5. Check that the brake warning light turns off.

   HINT:

   When rechecking, once exit test mode and then activate test mode again.

c. Check the deceleration sensor.

   Keep the vehicle in a stationary condition on a level place for 1 second or more.

d. Check the master cylinder pressure sensor.
   1. Leaving the vehicle in a stationary condition and the brake pedal in free condition for 1 second or more, continue to depress the brake pedal with a force of 98 N (10 kgf, 22 lbf) or more for 1 second or more.
   2. While the vehicle is stopped, release the brake pedal.
   3. While the vehicle is stopped, quickly depress the brake pedal once or more and check that the ABS warning light is illuminated for 3 seconds.

      HINT:

      Repeat the operation until the ABS warning light is illuminated.

e. Check the speed sensor signal.

   Drive the vehicle straightforward.

   Drive the vehicle with the speed faster than 45 km/h (28 mph) for several seconds and check that the ABS warning light turns off.

   HINT:

   The sensor check may not be completed if the wheels spin or the steering wheel is steered during this check.

f. Stop the vehicle.
g. Using SST, connect terminals TC and CG of the DLC3.

   SST 09843-18040

cardiagn.com

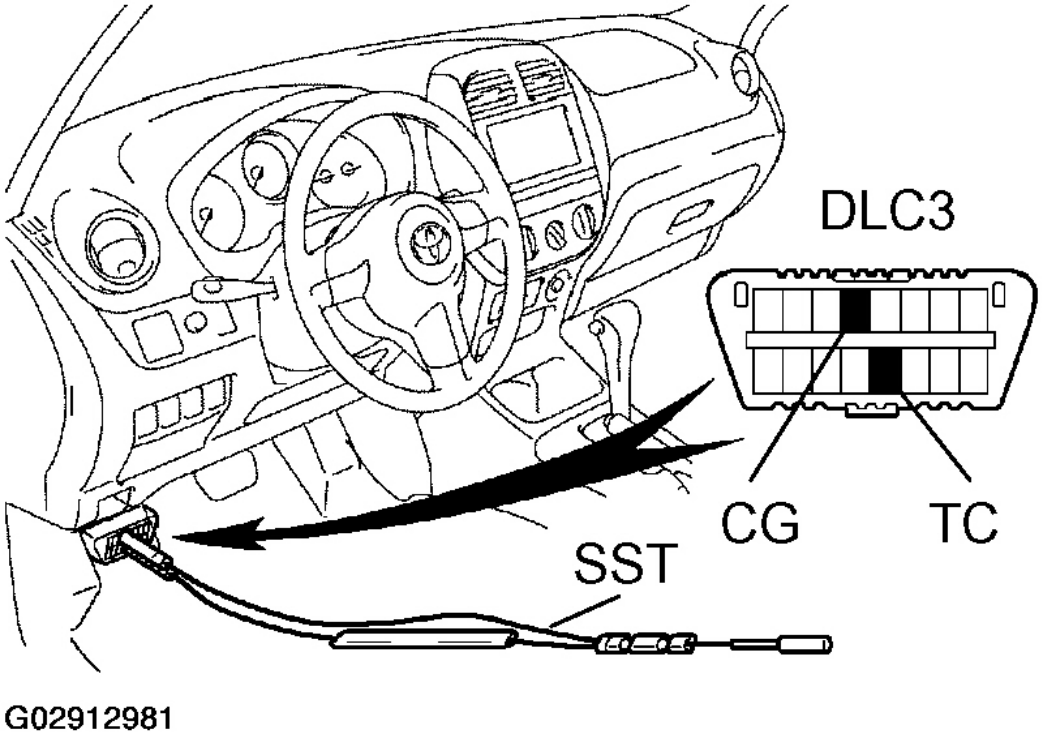

Fig. 14: Connecting Terminals TC & C4 of DLC3 Using SST
Courtesy of TOYOTA MOTOR SALES, U.S.A., INC.

h. Read the number of blinks of the ABS warning light.

HINT:

- See the list of DTC in **Fig. 17** .
- If every sensor is normal, the normal code is output (a cycle of 0.25 seconds ON and 0.25 seconds OFF is repeated).
- If 2 or more malfunctions are detected at the same time, the lowest numbered will be displayed 1st.

cardiagn.com

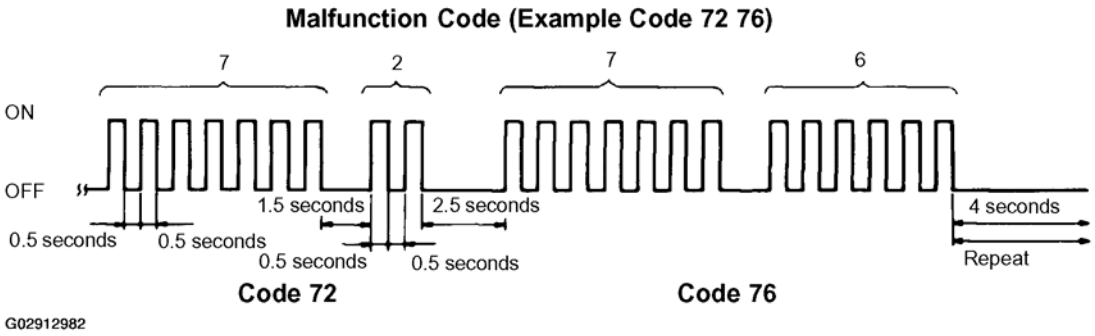

Fig. 15: Reading Malfunction Code Chart (e.g. 72,76)
Courtesy of TOYOTA MOTOR SALES, U.S.A., INC.

i. After doing the check, disconnect the SST from terminals TS and CG, TC and CG of the DLC3 and turn the ignition switch OFF.

SST 09843-18040

6. **When using hand-held tester: ABS SENSOR SIGNAL CHECK (TEST MODE)**

NOTE: **When having replaced the yaw rate sensor, deceleration sensor and/or ECU, perform zero point calibration of the yaw rate and deceleration sensors (see step 9). Make sure that this operation should be done before starting the following.**

HINT:

If the ignition switch is turned from ON to ACC or LOCK during test mode, DTC will be erased.

a. Connect the hand-held tester to the DLC3.

cardiagn.com

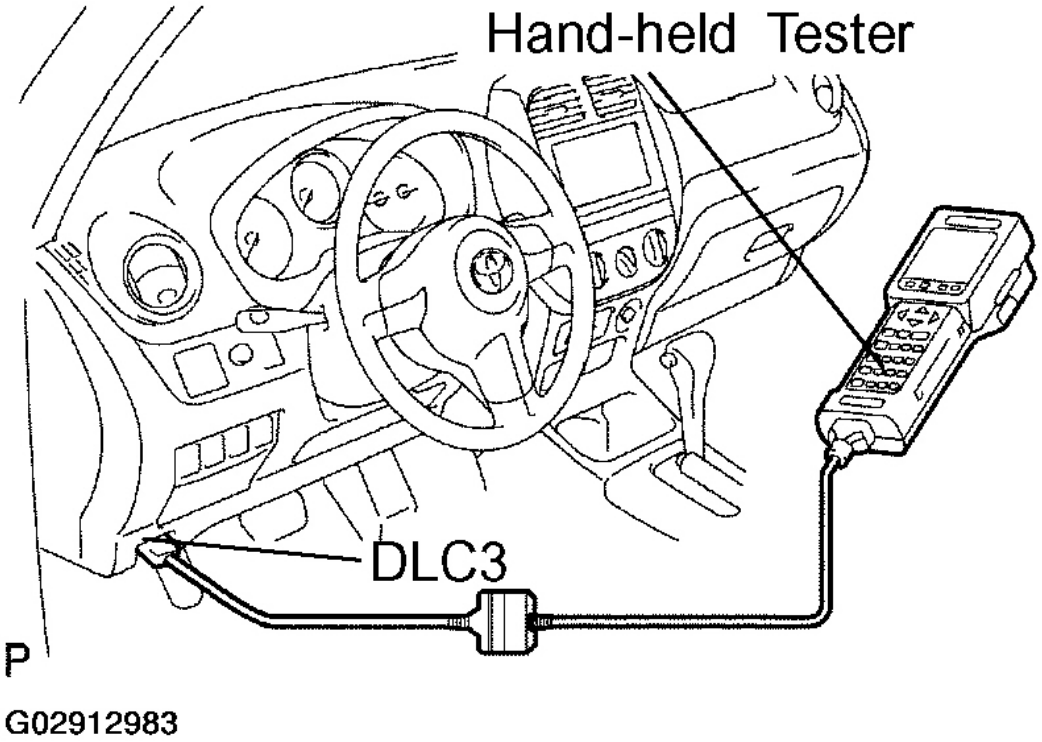

Fig. 16: Connecting Hand-Held Tester to DLC3
Courtesy of TOYOTA MOTOR SALES, U.S.A., INC.

b. Do steps 4 and from a to e .
c. Read the DTC by following the prompts on the tester screen.

HINT:

Please refer to the hand-held tester operator's manual for further details.

DTC of ABS sensor check function:

cardiagn.com

Code No.	Diagnosis	Trouble Area
C1271/71	Low output voltage of right front speed sensor	• Right front speed sensor • Sensor installation • Sensor rotor
C1272/72	Low output voltage of left front speed sensor	• Left front speed sensor • Sensor installation • Sensor rotor
C1273/73	Low output voltage of right rear speed sensor	• Right rear speed sensor • Sensor installation • Sensor rotor
C1274/74	Low output voltage of left rear speed sensor	• Left rear speed sensor • Sensor installation • Sensor rotor
C1275/75	Abnormal change in output voltage of right front speed sensor	Right front speed sensor rotor
C1276/76	Abnormal change in output voltage of Left front speed sensor	Left front speed sensor rotor
C1277/77	Abnormal change in output voltage of right rear speed sensor	Right rear speed sensor rotor
C1278/78	Abnormal change in output voltage of Left rear speed sensor	Left rear speed sensor rotor
C1279/79	Deceleration sensor is faulty	• Deceleration sensor • Sensor installation
C1281/81	• Master cylinder pressure sensor output signal is faulty • Problem symptoms in the brake cannot be confirmed	• Master cylinder pressure sensor • Brake booster

G02912984

Fig. 17: DTC Of ABS Sensor Function Check Table
Courtesy of TOYOTA MOTOR SALES, U.S.A., INC.

7. **When not using hand-held tester: VSC SENSOR SIGNAL CHECK (TEST MODE)**

NOTE: **When having replaced the yaw rate sensor, deceleration sensor and/or ECU, perform zero point calibration of the yaw rate and deceleration sensors (see step 9).**

HINT:

If the ignition switch is turned from ON to ACC or LOCK during test mode, DTC will be erased.

a. Procedures for test mode:
   1. Turn the ignition switch OFF.
   2. Check that the shift lever position is P. Turn the steering wheel to the straight-ahead position.
   3. Using SST, connect terminals TS and CG of the DLC3.

      SST 09843-18040

cardiagn.com

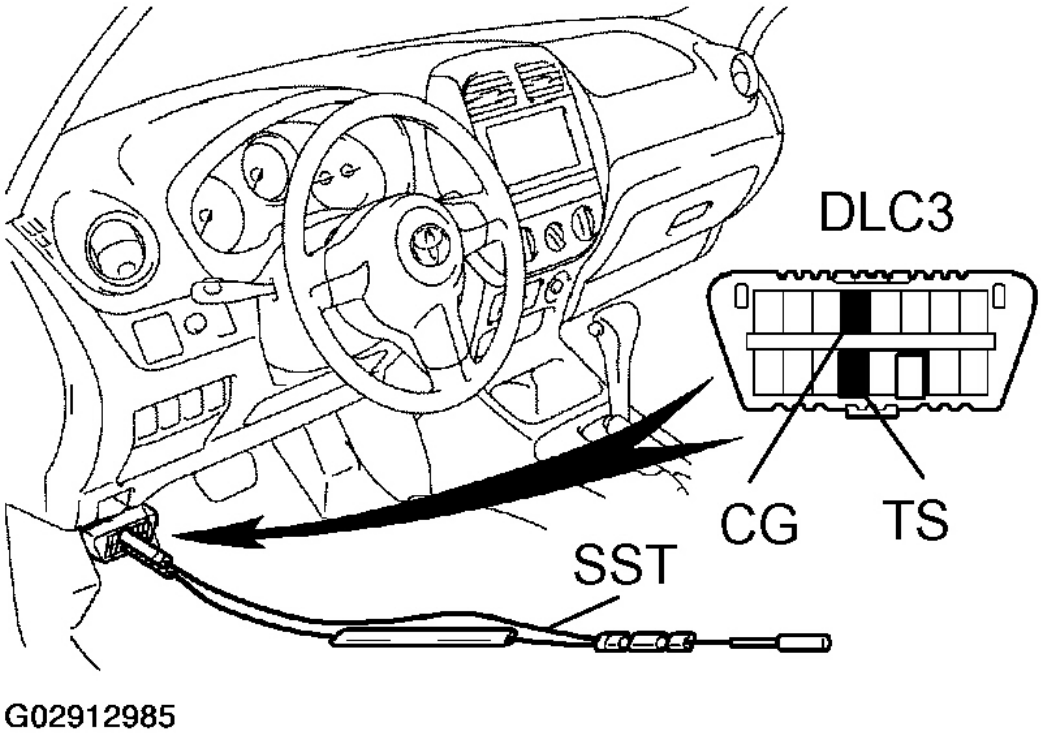

Fig. 18: Connecting Terminals TS & C4 Of DLC3 Using SST
Courtesy of TOYOTA MOTOR SALES, U.S.A., INC.

4. Start the engine.
5. Check that the VSC warning light blinks.

cardiagn.com

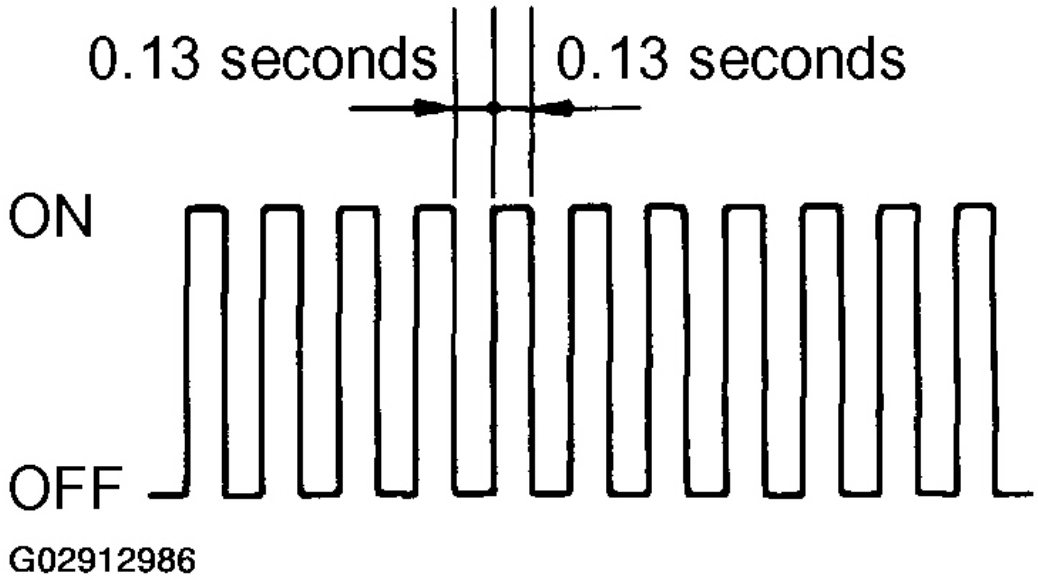

Fig. 19: Reading VSC Warning Light Blinking Pattern
Courtesy of TOYOTA MOTOR SALES, U.S.A., INC.

b. Check the yaw rate sensor.
   1. Move the shift lever to the D position and drive the vehicle at the vehicle speed of approximately 5 km/h (3 mph). Turn the steering wheel either to left or right for 90° or more, and maintain 180° circular drive for the vehicle.
   2. Stop the vehicle and move the shift lever to the P position. Check that the VSC warning buzzer sounds for 3 seconds

cardiagn.com

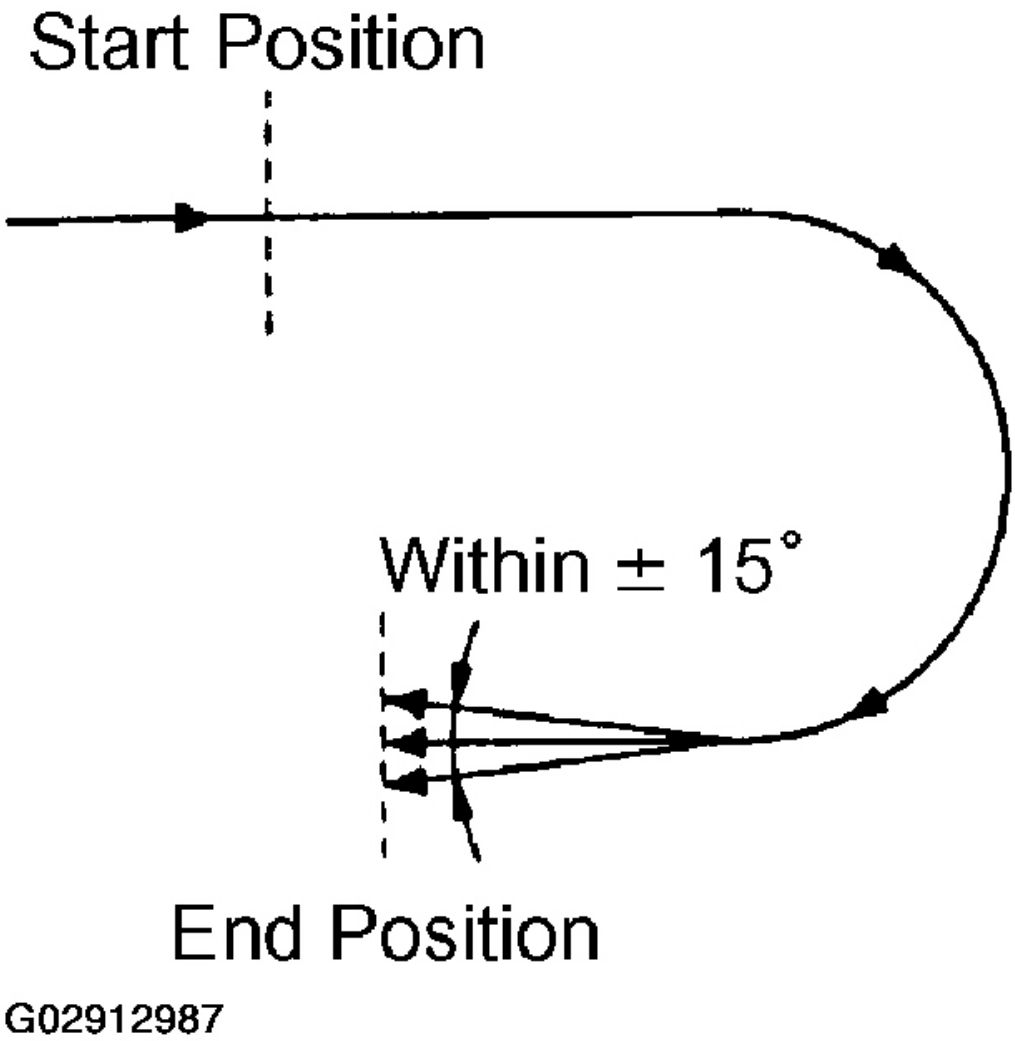

Fig. 20: Checking Yaw Rate Sensors
Courtesy of TOYOTA MOTOR SALES, U.S.A., INC.

If the VSC warning buzzer sounds, the sensor check is completed normally.

If the VSC warning buzzer does not sound, check the VSC warning buzzer circuit, then do the sensor check again.

VSC WARNING BUZZER TROUBLE AREA

Trouble Area	See
VSC warning buzzer circuit	VSC Warning Buzzer Circuit

cardiagn.com

If the VSC warning buzzer still does not sound, there is malfunction in the VSC sensor, so check the DTC.

HINT:

- Drive the vehicle circularly 180°. At the end of the turn, the direction of the vehicle should be within 180° +/- 5° from its start position.
- Do not spin the wheels.

3. Check the steering angle sensor.

   Turn the steering wheel to either left or right to the full lock position, from the vehicle stationary condition, and turn back the steering wheel to the neutral position.

c. Read the DTC.

1. Using SST, connect terminals TC and CG of the DLC3.

   SST 09843-18040

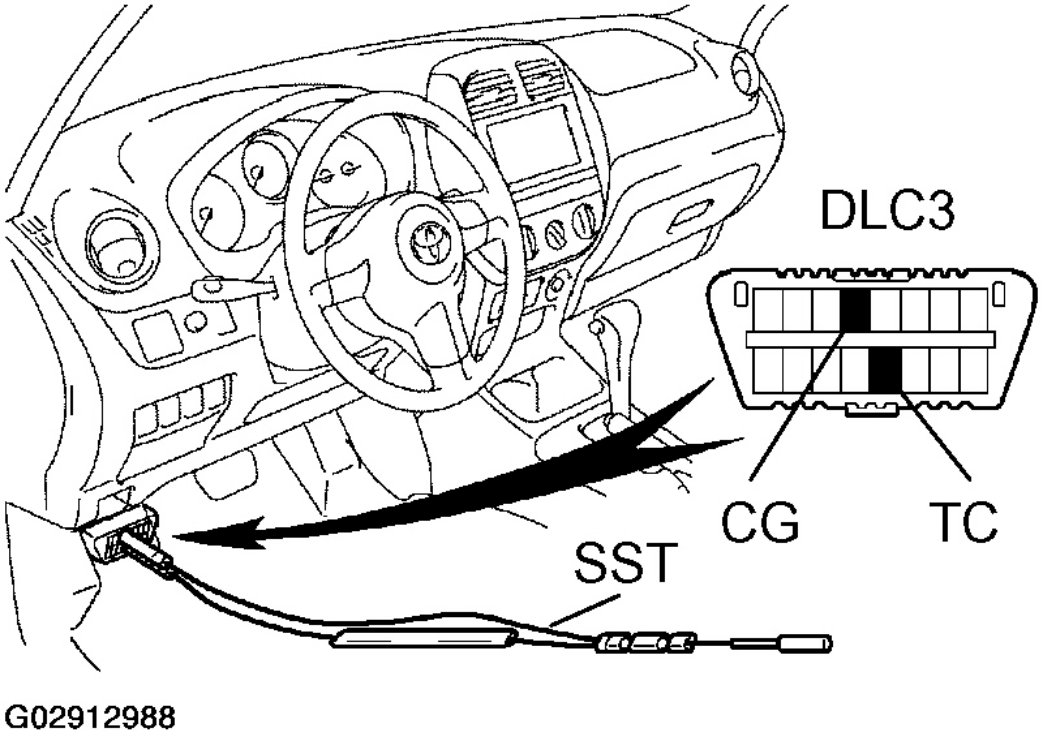

Fig. 21: Connecting Terminals TC & CG Of DLC3 Using SST
Courtesy of TOYOTA MOTOR SALES, U.S.A., INC.

cardiagn.com

2. Read the number of blinks of the VSC warning light.

   HINT:

   - See the list of DTC shown in **Fig. 23** .
   - If every sensor is normal, a normal code is output (a cycle of 0.25 seconds ON and 0.25 seconds OFF is repeated).
3. After doing the check, disconnect the SST from terminals TS and CG, TC and CG of the DLC3 and turn the ignition switch OFF.

   SST 09843-18040

8. **When using hand-held tester: VSC SENSOR SIGNAL CHECK (TEST MODE)**

NOTE: **When having replaced the yaw rate sensor, deceleration sensor and/or ECU, perform zero point calibration of the yaw rate and deceleration sensors (see step 9). Make sure that this operation should be done before starting the following.**

HINT:

If the ignition switch is turned from ON to ACC or LOCK during test mode, DTC will be erased.

a. Connect the hand-held tester to the DLC3.

cardiagn.com

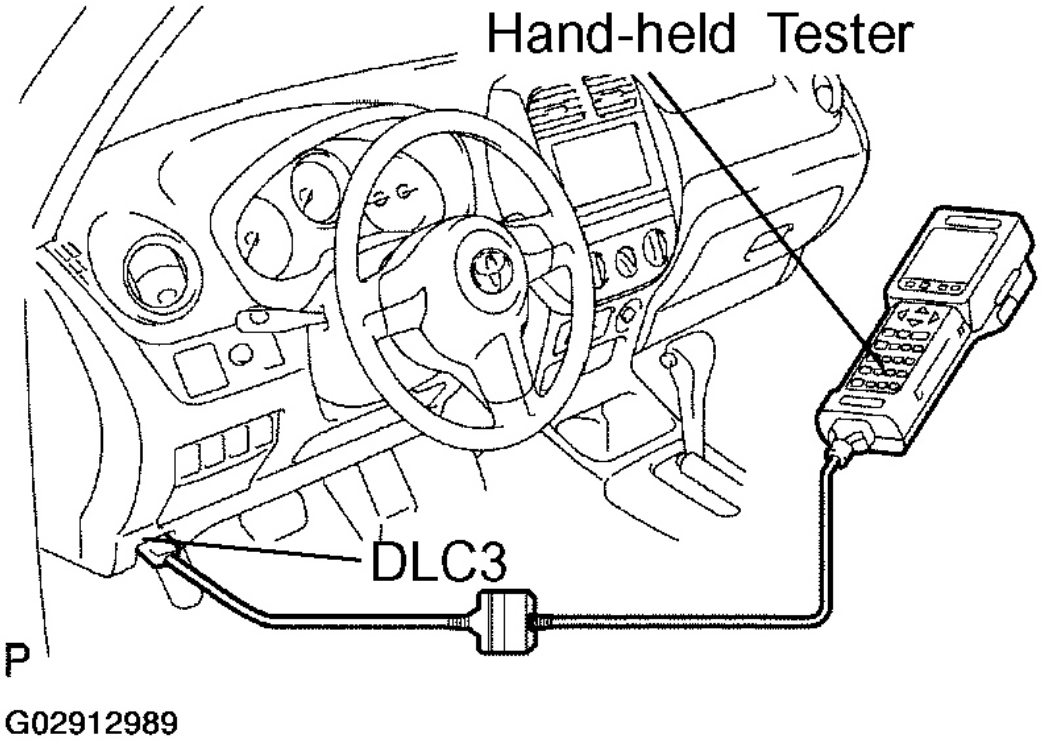

Fig. 22: Connecting Hand Held Tester To DLC3
Courtesy of TOYOTA MOTOR SALES, U.S.A., INC.

b. Do steps (a)-(2), (a)-(4) and (b) in step 5 .
c. Read the DTC by following the prompts on the tester screen.

HINT:

Please refer to the hand-held tester operator's manual for further details.

DTC of VSC sensor check function:

Code No.	Diagnosis	Trouble Area
C0371/71	Yaw rate sensor output signal malfunction	• Yaw rate sensor • Yaw rate sensor circuit

G02912990

Fig. 23: DTC Of VSC Sensor Check Function Table
Courtesy of TOYOTA MOTOR SALES, U.S.A., INC.

cardiagn.com

9. **When not using hand-held tester:**

IF NECESSARY, PERFORM ZERO POINT CALIBRATION OF YAW RATE AND DECELERATION SENSORS

HINT:

- When having replaced the yaw rate sensor, deceleration sensor or/and the ECU, make sure to perform yaw rate sensor (including deceleration sensor) zero point calibration.
- This operation is also required when the deceleration sensor or yaw rate sensor has been replaced since the calibrated zero point of both sensors will be erased.

NOTE:

- **While obtaining the zero point, do not give any vibration to the vehicle by tilting, moving or shaking it and keep it in a stationary condition (do not start the engine).**
- **Be sure to do this on a level surface (within an inclination of 1 %).**

a. Clear the zero points of the yaw rate and deceleration sensors.
   1. Move the shift lever to P position.
   2. Turn the ignition switch ON in a stationary condition.
   3. With the ignition switch ON, using SST, repeat a cycle of short and open between terminals Ts and CG of the DLC3 4 times or more within 8 seconds. Check that the TRAC OFF indicator and VSC warning lights are illuminated, indicating that the recorded zero point is erased.

      SST 09843-18040

cardiagn.com

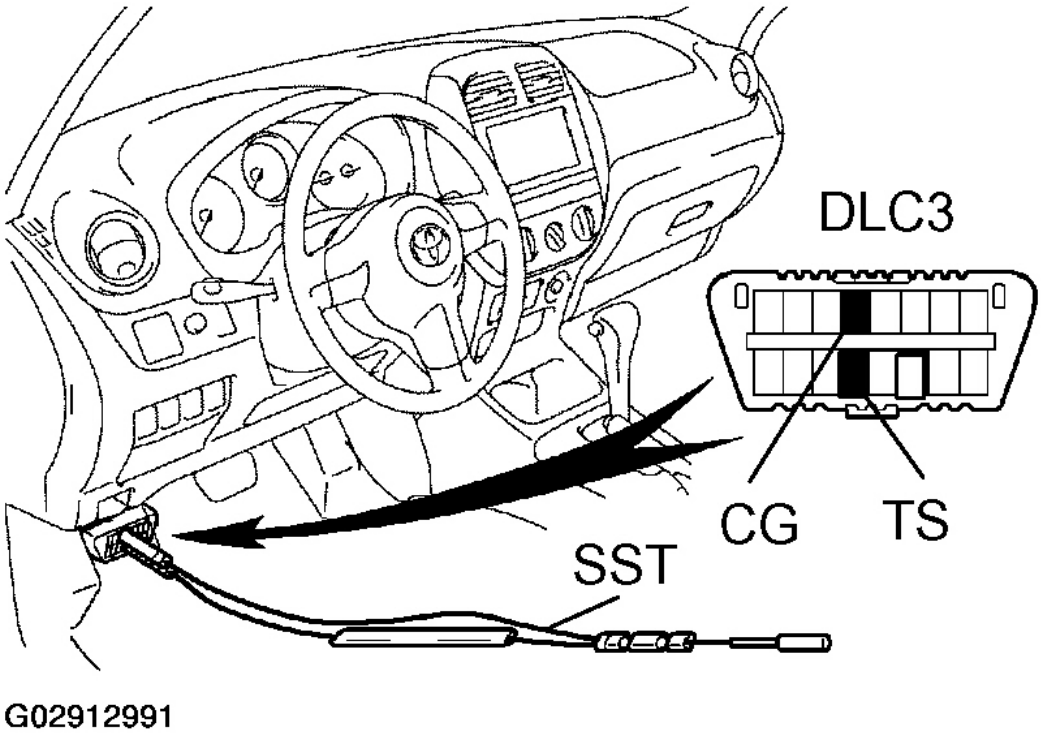

Fig. 24: Connecting Terminals CG & TS Of DLC3 Using SST
Courtesy of TOYOTA MOTOR SALES, U.S.A., INC.

4. Turn the ignition switch OFF and VSC within 15 seconds.

b. Obtain zero point of the yaw rate sensor.

1. Disconnect terminals TS and CG of the DLC3.
2. Turn the ignition switch ON.

   HINT:

   The vehicle should be in a stationary condition with the shift lever in P position.

3. Check that the TRAC OFF indicator and VSC warning light turns off about 15 seconds after the ignition switch is turned ON.

   HINT:

   Even if the ignition is not turned OFF in step 4 and remains ON, the yaw rate sensor zero point calibration can be completed. In this case, the TRAC OFF indicator and VSC warning lights are illuminated for about 15 seconds and then the VSC warning light starts blinking

cardiagn.com

(normal code).

4. After ensuring that the TRAC OFF indicator and VSC warning light remains OFF for 2 seconds, turn the ignition switch OFF.

   HINT:

   If the ignition switch is not turned OFF in step 4 , make sure that the TRAC OFF indicator and VSC warning light blinks for 2 seconds Then turn the ignition switch OFF.

c. Perform deceleration sensor zero point calibration.

NOTE: After step (b) (the yaw rate sensor zero point calibration), the VSC warning light turns off. At this time, if the vehicle is driven without performing step (c) (deceleration sensor zero point calibration), deceleration sensor zero point calibration malfunction will be detected and the TRAC OFF indicator light and VSC warning light will light up. Therefore, perform step (c) right after step (b).

1. Using SST, connect terminals TS and CG of the DLC3.

   SST 09843-18040

cardiagn.com

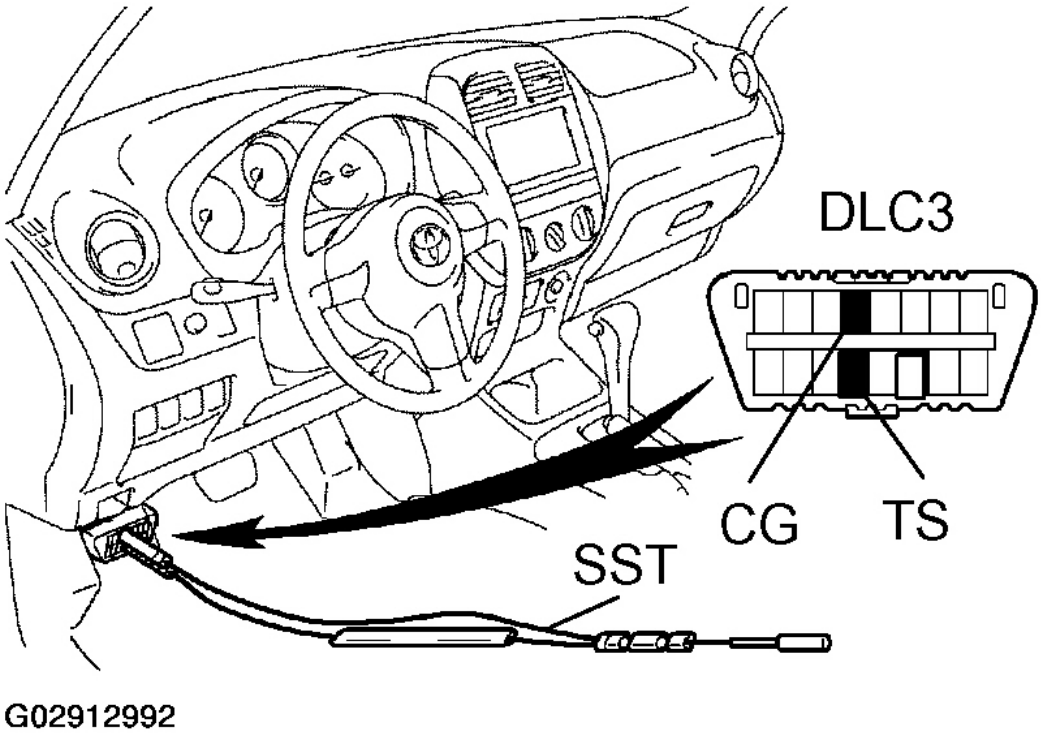

Fig. 25: Connecting Terminals TS & CG Of DLC3 Using SST
Courtesy of TOYOTA MOTOR SALES, U.S.A., INC.

2. Turn the ignition switch ON.

   HINT:

   Place the vehicle in a stationary condition with the shift lever in P position.

3. After turning the ignition switch ON, check that the VSC warning light is illuminated for about 4 seconds and then starts quick blinking at 0.13 seconds intervals.

cardiagn.com

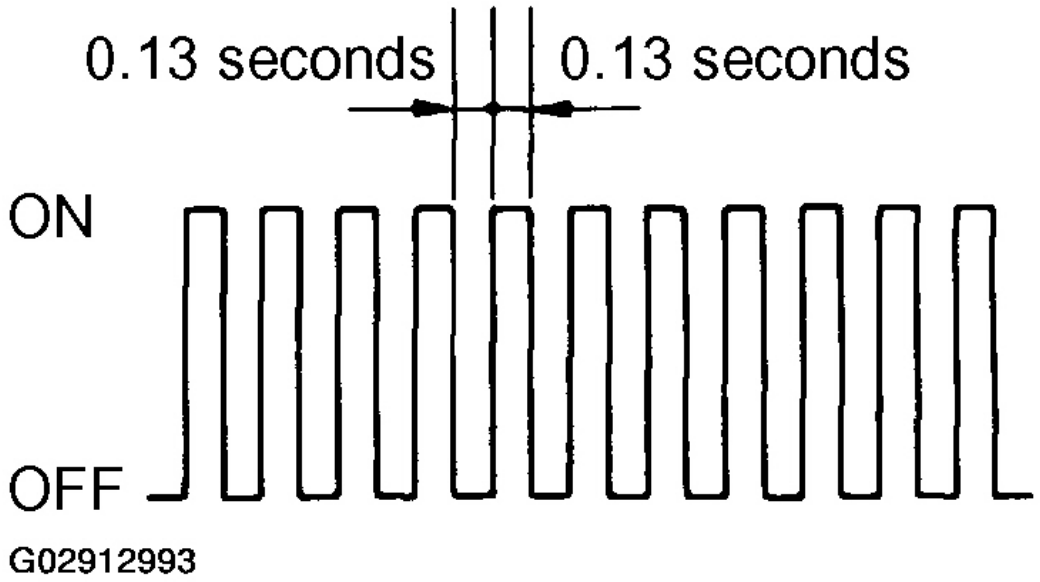

Fig. 26: Reading VSC Warning Light Blinking Pattern
Courtesy of TOYOTA MOTOR SALES, U.S.A., INC.

4. After ensuring the blinking of the VSC warning light for 2 seconds, turn the ignition switch OFF.
5. Remove the SST and disconnect terminals TS and CG of the DLC3.

   SST 09843-18040

10. **When using hand-held tester: IF NECESSARY, PERFORM ZERO POINT CALIBRATION OF YAW RATE SENSOR AND DECELERATION SENSOR**

HINT:

When having replaced the yaw rate sensor and/or the brake actuator assembly, make sure to perform yaw rate sensor and deceleration sensor zero point calibration.

NOTE:

- **While obtaining the zero point, do not give any vibration to the vehicle by tilting, moving or shaking it and keep it in a stationary condition (do not start the engine).**
- **Be sure to do this on a level surface (within an inclination of 1 %).**

a. Connect the hand-held tester to the DLC3.
b. Turn the ignition switch ON.

cardiagn.com

c. Move the shift lever to P position.
d. Operate the hand-held tester to clear zero point calibration.
e. Operate the hand-held tester to test mode.

HINT:

When the zero point memorized in the skid control ECU was cleared, the VSC warning light turns ON. When the zero point calibration is completed, the VSC warning light blinks.

f. Keep the vehicle in the stationary condition on the level surface for 2 seconds or more.
g. Check that the VSC warning light blinks.

HINT:

If the VSC warning light does not blink, perform the zero point calibration.

h. Turn the ignition switch OFF.

DIAGNOSTIC TROUBLE CODE CHART

NOTE:

- **When removing the part, turn the ignition switch OFF.**
- **When replacing yaw rate sensors and/or the brake actuator assembly (skid control ECU), make sure to perform yaw rate sensor zero point calibration (see PRE-CHECK).**

HINT:

- Using SST 09843-18040, connect terminals TC and CG.
- If any abnormality is not found when inspecting parts, inspect the ECU.
- If a malfunction code is displayed during the DTC check, check the circuit listed for that code.

DTC chart of ABS:

cardiagn.com

DTC No.	Detection Item	Trouble Area
C0200/31	Right front wheel speed sensor signal malfunction	• Right front, left front, right rear, left rear speed sensor • Each speed sensor circuit • Sensor rotor
C0205/32	Left front wheel speed sensor signal malfunction	
C0210/33	Right rear wheel speed sensor signal malfunction	
C0215/34	Left rear wheel speed sensor signal malfunction	
C0226/21	Open or short circuit in brake actuator solenoid circuit (SFR circuit)	• Brake actuator • SFRH or SFRR circuit
C0236/22	Open or short circuit in brake actuator solenoid circuit (SFL circuit)	• Brake actuator • SFLH or SFLR circuit
C0246/23	Open or short circuit in brake actuator solenoid circuit (SRR circuit)	• Brake actuator • SRRH or SRRR circuit
C0256/24	Open or short circuit in brake actuator solenoid circuit (SRL circuit)	• Brake actuator • SRLH or SRLR circuit
C0273/13	Open circuit in ABS MTR relay circuit	• ABS MTR relay • ABS MTR relay circuit
C0274/14	Short circuit in ABS MTR relay circuit	
C0278/11	Open circuit in ABS SOL relay circuit	• ABS SOL relay • ABS SOL relay circuit
C0279/12	Short circuit in ABS SOL relay circuit	
C1225/25	Open or short circuit in brake actuator solenoid circuit (SM circuit)	• Brake actuator • SMF or SMR circuit
C1235/35	Foreign matter is attached on the tip of the right front sensor	• Right front, left front, right rear, left rear speed sensor • Sensor rotor
C1236/36	Foreign matter is attached on the tip of the left front sensor	
C1238/38	Foreign matter is attached on the tip of the right rear sensor	
C1239/39	Foreign matter is attached on the tip of the left rear sensor	
C1241/41	Low battery positive voltage or abnormally high battery positive voltage	• Battery • Charging system • Power source circuit
C1243/43	Malfunction in deceleration sensor (constant output)	• Yaw rate sensor • Wire harness for yaw rate sensor
C1244/44	Malfunction in deceleration sensor	• Yaw rate sensor • Yaw rate sensor circuit
C1245/45	Malfunction in deceleration sensor	• Yaw rate sensor • Wire harness for yaw rate sensor system
C1246/46	Malfunction in master cylinder pressure sensor	• Master cylinder pressure sensor • Master cylinder pressure sensor circuit
C1249/49	Open circuit in stop light switch circuit	• Stop light bulb • Stop light switch circuit
C1251/51	ABS pump motor is locked Open circuit in pump motor circuit	ABS pump motor
C1337/37	Some tire is different in size from the other tires (only for 2WD)	• Tire size
C1361/91	Short circuit in ABS motor fail safe relay circuit	• ABS cut off relay • ABS cut off relay circuit
C1381/97	Malfunction in power supply voltage yaw/deceleration sensor	• Yaw rate sensor • Yaw rate sensor power source circuit
U0073/94	Malfunction in CAN communication	• Wire harness
U0124/95	Malfunction in CAN communication with deceleration sensor	• Wire harness • Yaw rate sensor
Always ON	Malfunction in skid control ECU	• Power source circuit • ABS warning light circuit • Multiplex communication circuit • Skid control ECU

G02912994

Fig. 27: Diagnostic Trouble Code Chart (ABS)
Courtesy of TOYOTA MOTOR SALES, U.S.A., INC.

DTC chart of VSC:

cardiagn.com

DTC No.	Detection Item	Trouble Area
C1201/51	Malfunction in ECM	Engine control system
C1203/53	Malfunction in ECM communication circuit	• TRC+ or TRC- circuit • ENG+ or ENG- circuit • ECM
C1210/36	Zero point calibration of yaw rate sensor undone	• Yaw rate sensor • Yaw rate sensor circuit • PNP switch circuit (P position)
C1223/43	Malfunction in ABS control system	ABS control system
C1224/44	Open or short circuit in NEO signal circuit	• NEO circuit • ECM
C1231/31	Malfunction in steering angle sensor	• Steering angle sensor • Steering angle sensor circuit
C1232/32	Malfunction in deceleration sensor	• Deceleration sensor • Deceleration sensor circuit
C1234/34	Malfunction in yaw rate sensor	• Yaw rate sensor • Yaw rate sensor circuit
C1336/39	Zero point calibration of deceleration sensor undone	• Deceleration sensor • Deceleration sensor circuit • PNP switch (P position) circuit
U0123/62	Malfunction in CAN communication with yaw rate sensor	• Wire harness • Yaw rate sensor
U0126/63	Malfunction in CAN communication with steering position sensor	• Wire harness • Skid control ECU
Always ON	Malfunction in skid control ECU Open circuit in VSC warning indicator circuit	• Power source circuit • Skid control ECU

G02912995

Fig. 28: Diagnostic Trouble Code Chart (VSC)
Courtesy of TOYOTA MOTOR SALES, U.S.A., INC.

HINT:

In some cases, the hand-held tester cannot be used when the VSC warning light is always on.

DIAGNOSTIC TROUBLE CODES (DTC) LIST

DTC	Description
DTC C0200/31, C0205/32, 0210/33, C0215/34, C1235/35, C1236/36, C1238/38, C1239/39	Speed Sensor Circuit
DTC C0226/21, C0236/22, C0246/23, C0256/24	ABS Solenoid Circuit
DTC C0273/13, C0274/14, C1361/91	Pump Motor Circuit & Short circuit in ABS Motor Fail Safe Relay Circuit
DTC C0278/11, C0279/12	ABS Solenoid Valve Relay Circuit
DTC C1201/51	Engine Control System Malfunction
DTC C1203/53	Malfunction in ECM Communication Circuit

cardiagn.com

DTC C1210/36, C1336/39	Zero Point Calibration Deceleration Sensor undone & Zero Point Calibration Malfunction in Yaw Rate Sensor undone
DTC C1223/43	ABS Control System Malfunction
DTC C1224/44	NEO Signal Circuit
DTC C1225/25	VSC Solenoid Circuit
DTC C1231/31	Steering Angle Sensor Circuit
DTC C1232/32, C1234/34, C1243/43, C1244/44, C1245/45, C1381/97	Deceleration Sensor Circuit, Yaw Rate Sensor Circuit, Malfunction in Deceleration Sensor & Malfunction in Power Supply Voltage Yaw/Deceleration Sensor
DTC C1241/41	IG Power Source Circuit
DTC C1246/46	Master Cylinder Pressure Sensor Circuit
DTC C1249/49	Stop Light Switch Circuit
DTC C1251/51	ABS Pump Motor Lock
DTC C1337/37	Tires of Different Size (Only for 2WD)

PARTS LOCATION

cardiagn.com

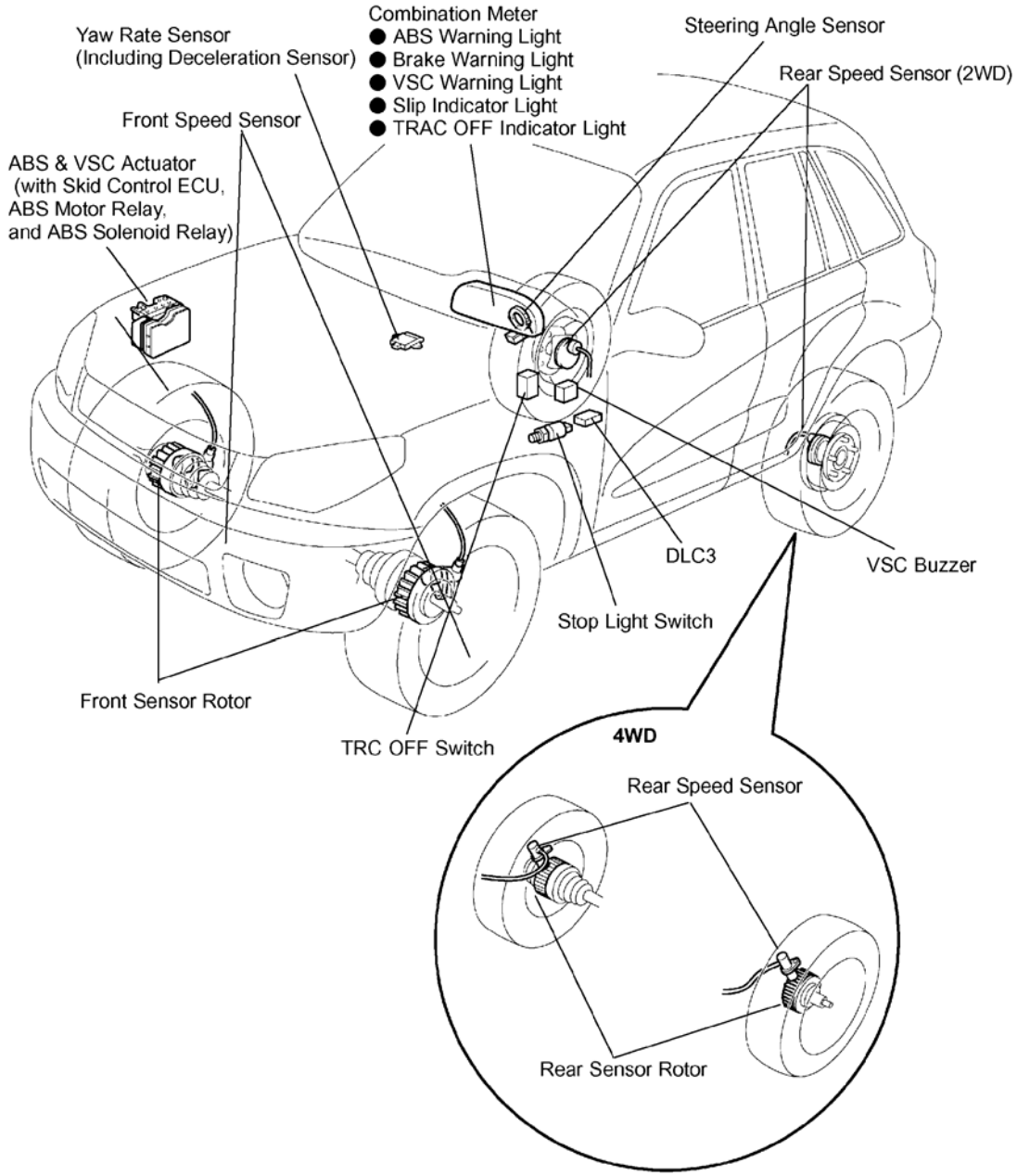

Fig. 29: Locating Parts Of ABS & VSC
Courtesy of TOYOTA MOTOR SALES, U.S.A., INC.

TERMINALS OF ECU

cardiagn.com

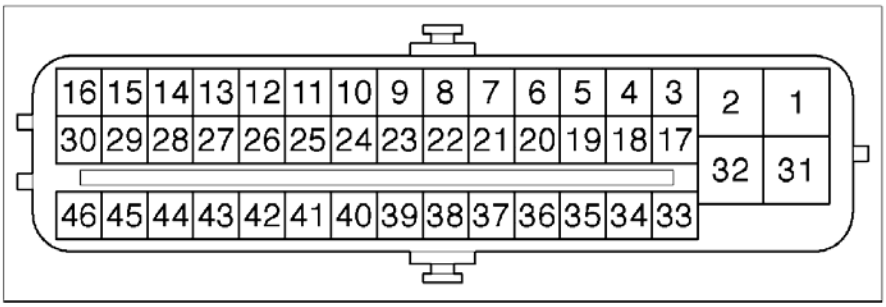

N

G02912997

Fig. 30: Identifying ECU Connector Terminals
Courtesy of TOYOTA MOTOR SALES, U.S.A., INC.

cardiagn.com

Symbols (Terminal No.)	Wiring Color	Condition	Specified Condition
BM (S9-2) - GND (S9-1, 32)	L - W-B	Ignition switch ON, pump motor running	10 to 14 V
FR+ (S9-3) - FR- (S9-17)	B - W	Ignition switch ON, slowly turn right front wheel	AC generation
FL+ (S9-18) - FL- (S9-4)	R - G	Ignition switch ON, slowly turn left front wheel	AC generation
RR+ (S9-5) - RR- (S9-19)	Y - BR	Ignition switch ON, slowly turn right rear wheel	AC generation
RL+ (S9-20) - RL- (S9-6)	G - R	Ignition switch ON, slowly turn left rear wheel	AC generation
TRC+ (S9-8) - TRC- (S9-22)	BR-R - Y	Ignition switch ON	Pulse generation
ENG+ (S9-9) - ENG - (S9-23)	B - W-G	Ignition switch ON	Pulse generation
NEO (S9-10) - GND (S9-1, 32)	G-R - W-B	Engine idling	Pulse generation
CANH (S9-11) - CANL (S9-25)	B - W	Ignition switch ON	Pulse generation
D/G (S9-13) - GND (S9-1, 32)	W - W-B	Ignition switch ON	10 to 14 V
MRF (S9-14) - R+ (S9-45)	P - R	Ignition switch ON	10 to 14 V
MR (S9-15) - R+ (S9-45)	Y - R	Ignition switch ON, pump motor running	10 to 14 V
+BS (S9-31) - GND (S9-1, 32)	R-Y - W-B	Always	10 to 14 V
STP (S9-27) - GND (S9-1, 32)	G-W - W-B	Stop light switch ON (Brake pedal depressed)	8 to 14 V
		Stop light switch OFF (Brake pedal released)	Below 1.5 V
PKB (S9-28) - GND (S9-1, 32)	R-B - W-B	Ignition switch ON, parking brake switch ON	Below 1.5 V
		Ignition switch ON, parking brake switch OFF	10 to 14 V
WA (S9-29) - GND (S9-1, 32)	R-Y - W-B	Ignition switch ON, ABS warning light ON	10 to 14 V
		Ignition switch ON, ABS warning light OFF	Below 2.0
Bz (S9-30) - GND (S9-1, 32)	G - W-B	Ignition switch ON, VSC buzzer sounds	Below 1.0 ↔ 10 to 14 V
		Ignition switch ON, VSC buzzer does not sound	10 to 14 V
VSCW (S9-36) - GND (S9-1, 32)	R-W - W-B	Ignition switch ON, VSC warning light ON	Below 2.0 V
		Ignition switch ON, VSC warning light OFF	10 to 14 V
WFSE (S9-42) - GND (S9-1, 32)	P - W-B	Ignition switch ON	10 to 14 V
CSW (S9-43) - GND (S9-1, 32) (2WD only)	L-Y - W-B	TRAC OFF switch OFF	10 to 14 V
BRL (S9-44) - GND (S9-1, 32)	R - W-B	Ignition switch ON, brake warning light ON	10 to 14 V
		Ignition switch ON, brake warning light OFF	Below 2.0 V
R+ (S9-45) - GND (S9-1, 32)	R - W-B	Ignition switch ON, ABS warning light OFF	10 to 14 V
IG1 (S9-46) - GND (S9-1, 32)	R-L - W-B	Ignition switch ON	10 to 14 V

G02912998

Fig. 31: Terminals Of ECU Reference Table
Courtesy of TOYOTA MOTOR SALES, U.S.A., INC.

PROBLEM SYMPTOMS TABLE

If a normal code is indicated during the DTC check but the problem still occurs, check the circuits for each problem symptom in the order given in **Fig. 32** .

NOTE:

- **When replacing brake actuator assembly, sensor or etc., turn the ignition switch OFF.**

cardiagn.com

- **When replacing yaw rate sensor and/or the brake actuator assembly, make sure to perform yaw rate sensor zero point calibration (see PRE-CHECK).**

cardiagn.com

Symptoms	Suspected Area
ABS does not operate	1. Check the DTC that the normal code is output. 2. IG power source circuit 3. Speed sensor circuit 4. Check the hydraulic circuit for leakage. 5. When 1. to 4. are all normal and the problem still occurs, replace the brake actuator assembly.
ABS does not operate efficiently	1. Check the DTC that the normal code is output. 2. Speed sensor circuit 3. Stop light switch circuit 4. Check the hydraulic circuit for leakage. 5. When 1. to 4. are all normal and the problem still occurs, replace the brake actuator assembly.
ABS warning light abnormal	1. ABS warning light circuit 2. Brake actuator assembly
BRAKE warning light abnormal	1. BRAKE warning light circuit 2. Brake actuator assembly
DTC check cannot be done	1. ABS warning light circuit 2. TC terminal circuit 3. VSC warning light circuit 4. When 1. and 3. are all normal and the problem still occurs, replace the brake actuator assembly.
Speed sensor signal check cannot be done	1. Brake actuator assembly
VSC does not operate TRAC does not operate	1. Check the DTC, reconfirming that the normal code is output. 2. Perform zero point calibration 3. IG power source circuit 4. Check the hydraulic circuit for leakage 5. Speed sensor circuit 6. Yaw rate sensor circuit 7. Steering angle sensor circuit 8. When 1. to 7. are all normal and the problem still occurs, replace the brake actuator assembly.
VSC does not operate efficiently TRAC does not operate efficiently	1. Check the DTC, reconfirming that the normal code is output. 2. Perform zero point calibration 3. Check the hydraulic circuit for leakage 4. Speed sensor circuit 5. Yaw rate sensor circuit 6. Steering angle sensor circuit 7. When 1. to 6. are all normal and the problem still occurs, replace the brake actuator assembly.
VSC warning light abnormal	1. VSC warning light circuit 2. Brake actuator assembly
SLIP indicator light abnormal	1. SLIP indicator light circuit 2. Brake actuator assembly
TRAC OFF indicator abnormal	1. TRAC OFF indicator light circuit 2. TRAC OFF switch circuit 3. Brake actuator assembly

G02912999

Fig. 32: Problem Symptoms Table

cardiagn.com

Courtesy of TOYOTA MOTOR SALES, U.S.A., INC.

CIRCUIT INSPECTION

DTC C0200/31, C0205/32, 0210/33, C0215/34, C1235/35, C1236/36, C1238/38, C1239/39: SPEED SENSOR CIRCUIT

CIRCUIT DESCRIPTION

The speed sensor detects wheel speed and sends appropriate signals to the ECU. These signals are used to control the ABS control system. The front and rear rotors have 48 serrations, respectively.

When the rotors rotate, the magnetic field emitted by the permanent magnet in the speed sensor generates an AC voltage. Since the frequency of this AC voltage changes in direct proportion to the speed of the rotor, the frequency is used by the ECU to detect the speed of each wheel.

cardiagn.com

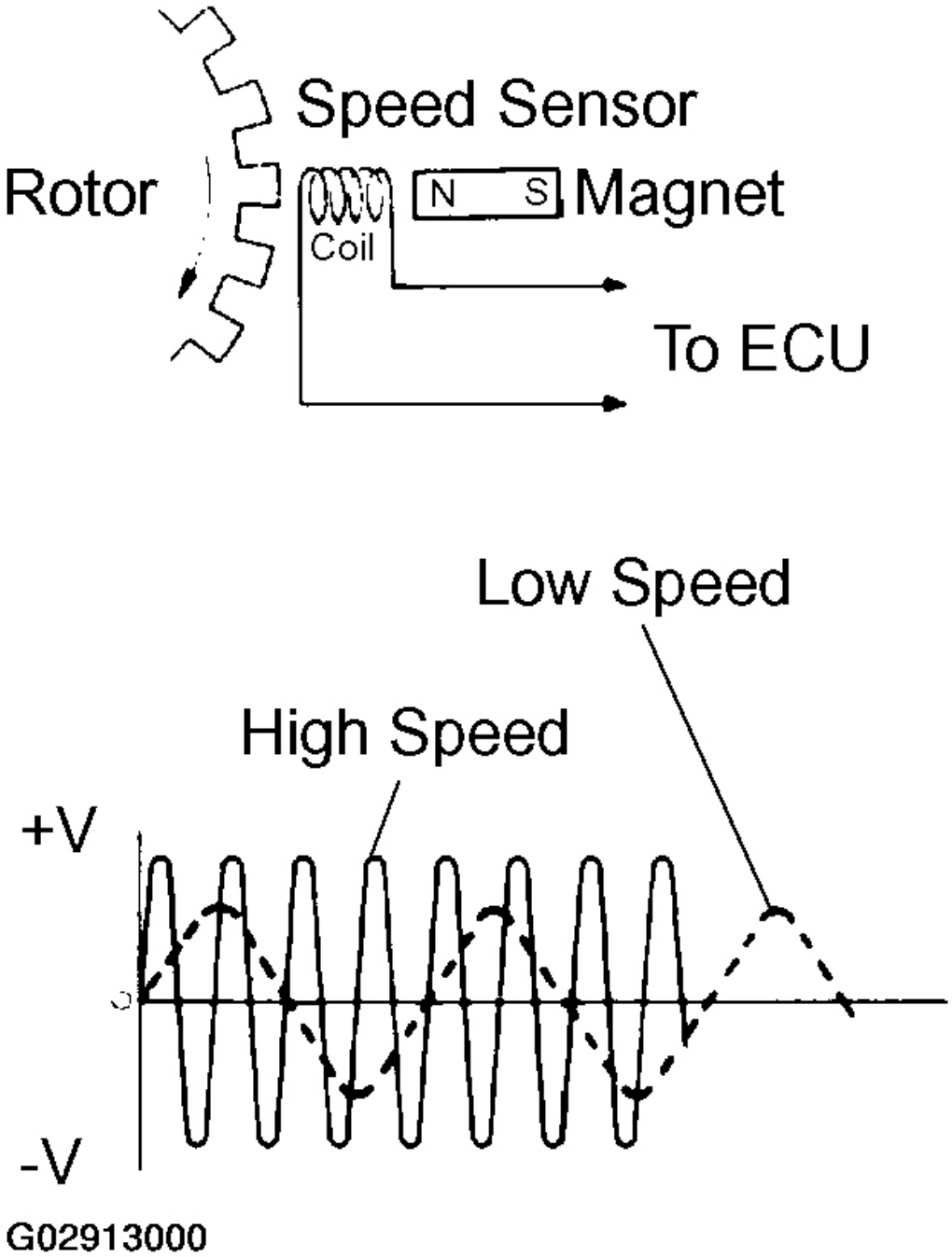

Fig. 33: Speed Sensor Circuit
Courtesy of TOYOTA MOTOR SALES, U.S.A., INC.

cardiagn.com

DTC No.	DTC Detection Condition	Trouble Area
C0200/31 C0205/32 C0210/33 C0215/34	• With vehicle speed at 10 km/h (6 mph) or more, pulses are not input for 15 seconds • Momentary interruption of sensor signal of faulty wheel has occurred 7 times or more. • Sensor signal circuit is open for 0.5 seconds or more.	• Right front, left front, right rear and left rear speed sensor • Each speed sensor circuit • Sensor rotor
C1235/35 C1236/36 C1238/38 C1239/39	With vehicle speed at 20 km/h (13 mph) or more, sensor signal of faulty wheel generated noise for 5 seconds or more.	• Right front, left front, right rear, left rear speed sensor • Each speed sensor circuit

G02913001

Fig. 34: DTC (C0200/31, C0205/32, C0210/33, C0215/34, C1235/35, C1236/36, C1238/38, C12239/39) Table
Courtesy of TOYOTA MOTOR SALES, U.S.A., INC.

HINT:

- DTC No. C0200/31 and C1235/35 are for the right front speed sensor.
- DTC No. C0205/32 and C1236/36 are for the left front speed sensor.
- DTC No. C0210/33 and C1238/38 are for the right rear speed sensor.
- DTC No. C0215/34 and C1239/39 are for the left rear speed sensor.

WIRING DIAGRAM

cardiagn.com

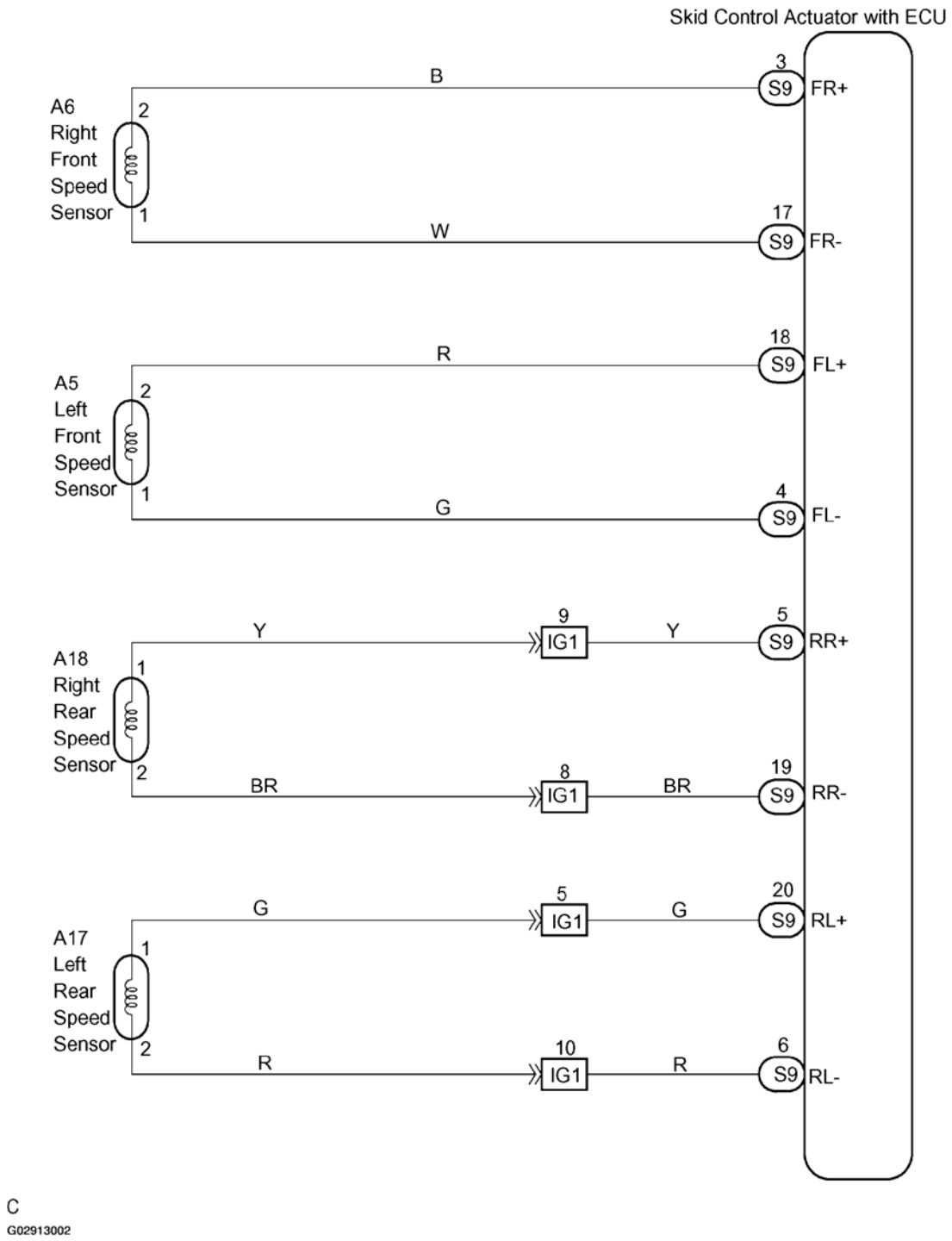

Fig. 35: Speed Sensor Wiring Diagram
Courtesy of TOYOTA MOTOR SALES, U.S.A., INC.

INSPECTION PROCEDURE

cardiagn.com

HINT:

Start the inspection from step 1 when using the hand-held tester and start from step 2 when not using handheld tester.

1. **Check output value of speed sensor.**

   PREPARATION:

   a. Connect the hand-held tester to the DLC3.
   b. Turn the ignition switch ON and push the hand-held tester main switch ON.
   c. Select the DATA LIST mode on the hand-held tester.

   CHECK:

   Check that there is no difference between the speed value output from the speed sensor displayed on the hand-held tester and the speed value displayed on the speedometer when driving the vehicle.

   OK:

   There is almost no difference from the displayed speed values.

   HINT:

   There is tolerance of +/- 10 % in the speedometer indication.

   OK: Go to step 4 .
   NG: Go to next step.

2. **Check speed sensor.**

   Front speed sensor:

   PREPARATION:

   a. Remove the front fender liner.
   b. Make sure that there is no looseness at the connector lock part and connecting part of the connector.
   c. Disconnect the speed sensor connector.

   CHECK:

   Measure the resistance between terminals 1 and 2 of the speed sensor connector.

cardiagn.com

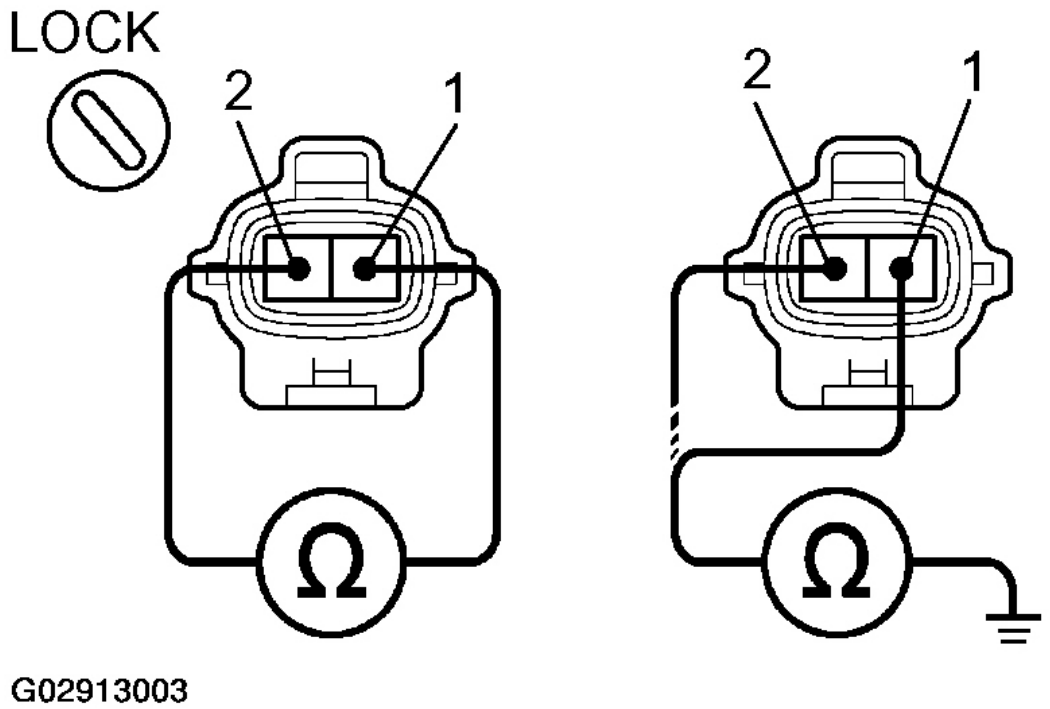

Fig. 36: Measuring Resistance Between Terminals 1 & 2 Of Front Speed Sensor Connector
Courtesy of TOYOTA MOTOR SALES, U.S.A., INC.

OK:

Resistance: 0.6 to 2.5 kohm at -40 to 120°C (-40 to 248°F)

CHECK:

Measure the resistance between terminals 1 and 2 of the speed sensor connector and the body ground.

OK:

Resistance: 10 Mohm or higher

Rear speed sensor (2WD):

PREPARATION:

a. Make sure that there is no looseness at the connector lock part and connecting part of the connector.
b. Disconnect the speed sensor connector at the hub bearing.

cardiagn.com

CHECK:

Measure the resistance between terminals 1 and 2 of the speed sensor connector.

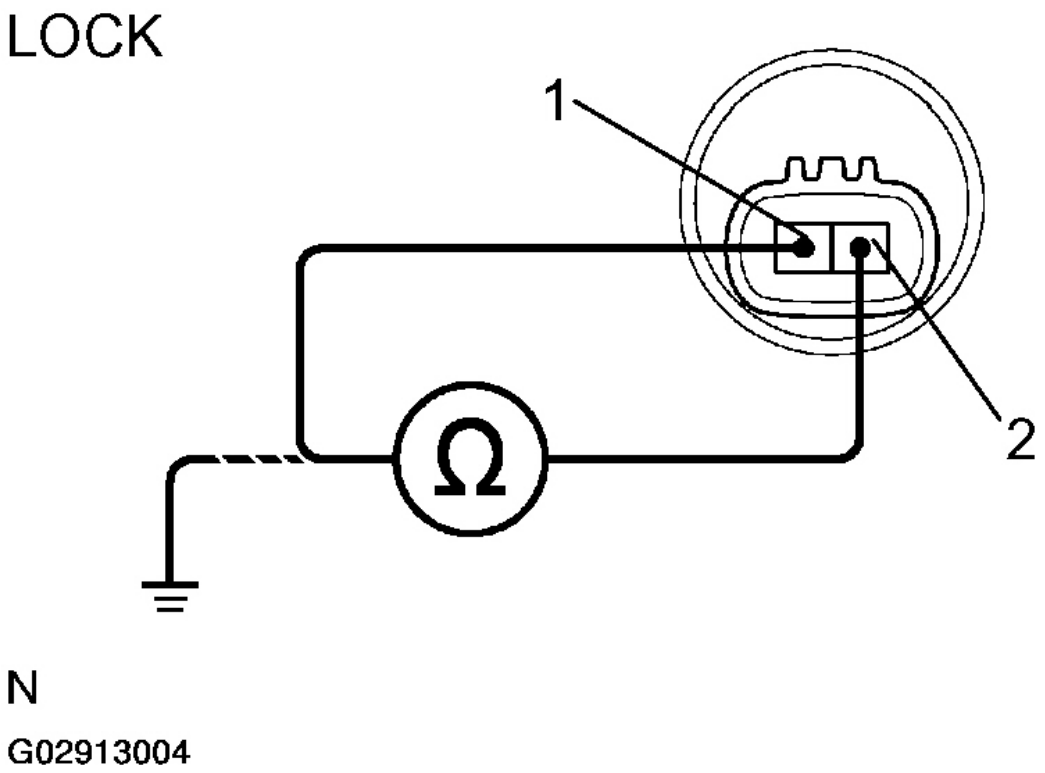

Fig. 37: Measuring Resistance Between Terminals 1 & 2 Of Rear (2WD) Speed Sensor Connector
Courtesy of TOYOTA MOTOR SALES, U.S.A., INC.

OK:

Resistance: 0.8 to 1.9 kohm at -40 to 120°C (-40 to 248°F)

CHECK:

Measure the resistance between terminals 1 and 2 of the speed sensor connector and the body ground.

OK:

Resistance: 1 Mohm or higher

Rear speed sensor (4WD):

cardiagn.com

PREPARATION:

a. Make sure that there is no looseness at the connector lock part and connecting part of the connector.
b. Disconnect the speed sensor connector at the hub bearing.

CHECK:

Measure the resistance between terminals 1 and 2 of the speed sensor connectors.

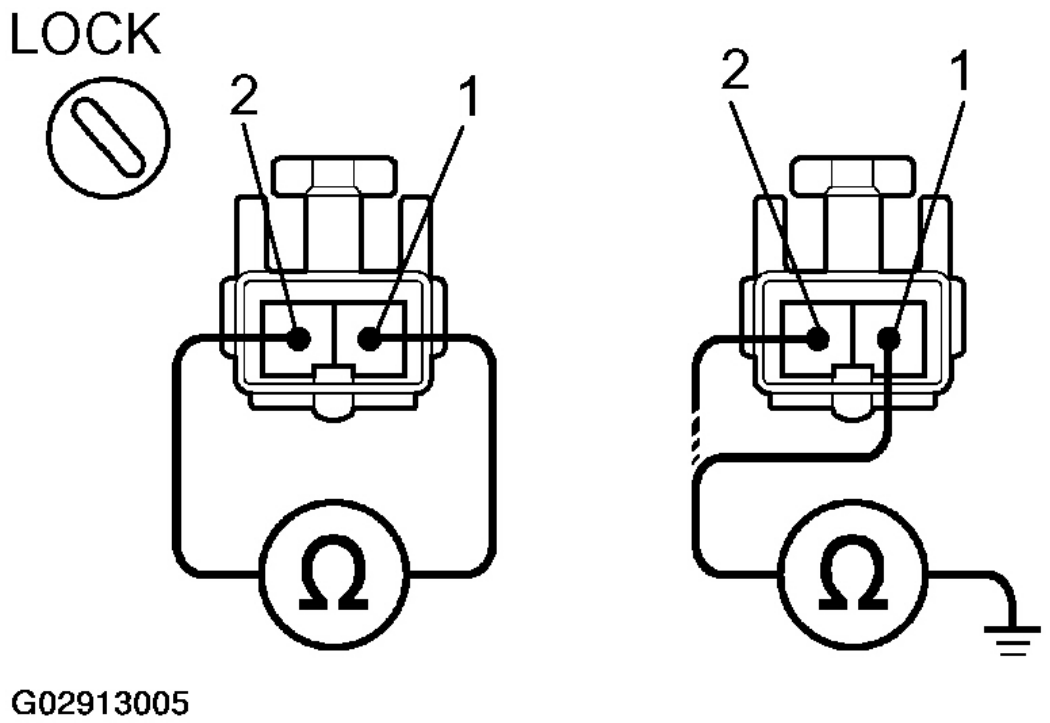

Fig. 38: Measuring Resistance Between Terminals 1 & 2 Of Rear (4WD) Speed Sensor Connector
Courtesy of TOYOTA MOTOR SALES, U.S.A., INC.

OK:

Resistance: 0.65 to 1.8 kohm at -40 to 120°C (-40 to 248°F)

CHECK:

Measure the resistance between terminals 1 and 2 of the speed sensor connector and the body ground.

OK:

cardiagn.com

Resistance: 1 Mohm or higher

Rear speed sensor sub-wire harness (2WD):

PREPARATION:

a. Remove the seat cushion and seat back.
b. Make sure that there is no looseness at the connector lock part and connecting part of the connector.
c. Disconnect the speed sensor connector inside the vehicle.

CHECK:

a. Measure the resistance between terminal 1 of connector 1 and terminal 2 of connector 2.
b. Measure the resistance between terminal 2 of connector 1 and terminal 1 of connector 2.

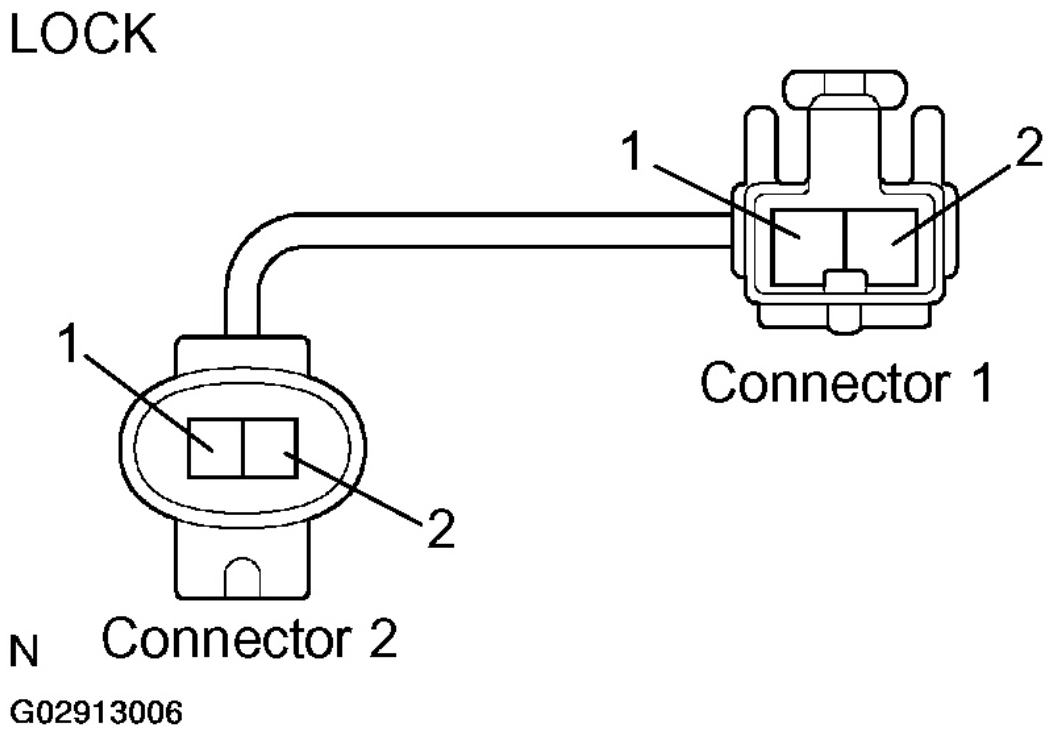

Fig. 39: Measuring Resistance Between Terminals 1 & 2 Of Rear Speed Sensor Sub-Wire Harness (2WD)
Courtesy of TOYOTA MOTOR SALES, U.S.A., INC.

OK:

cardiagn.com

Resistance: Below 1 ohm

CHECK:

Measure the resistance between terminals 1 and 2 of the speed sensor connector 1 and the body ground.

OK:

Resistance: 10 Mohm or higher

NG: Replace speed sensor or sub-wire harness.

NOTE: Finally, check the speed sensor signal (see PRE-CHECK).

OK: Go to next step.

3. **Check for open and short circuit in harness and connector between each speed sensor and skid control actuator with ECU (See HOW TO USE THE DIAGNOSTIC CHART AND INSPECTION PROCEDURE).**

   NG: Repair or replace harness and connector.

   OK: Go to next step.

4. **Check sensor installation.**

CHECK:

Check the speed sensor installation.

OK:

FRONT (2WD, 4WD), Rear (4WD):

The installation bolt is tightened properly and there is no clearance between the sensor and steering knuckle or rear axle carrier.

Torque: 8.0 N.m (8.2 kgf.cm, 71 in.lbf).

Rear (2WD):

There is no clearance between the sensor and rear axle carrier

cardiagn.com

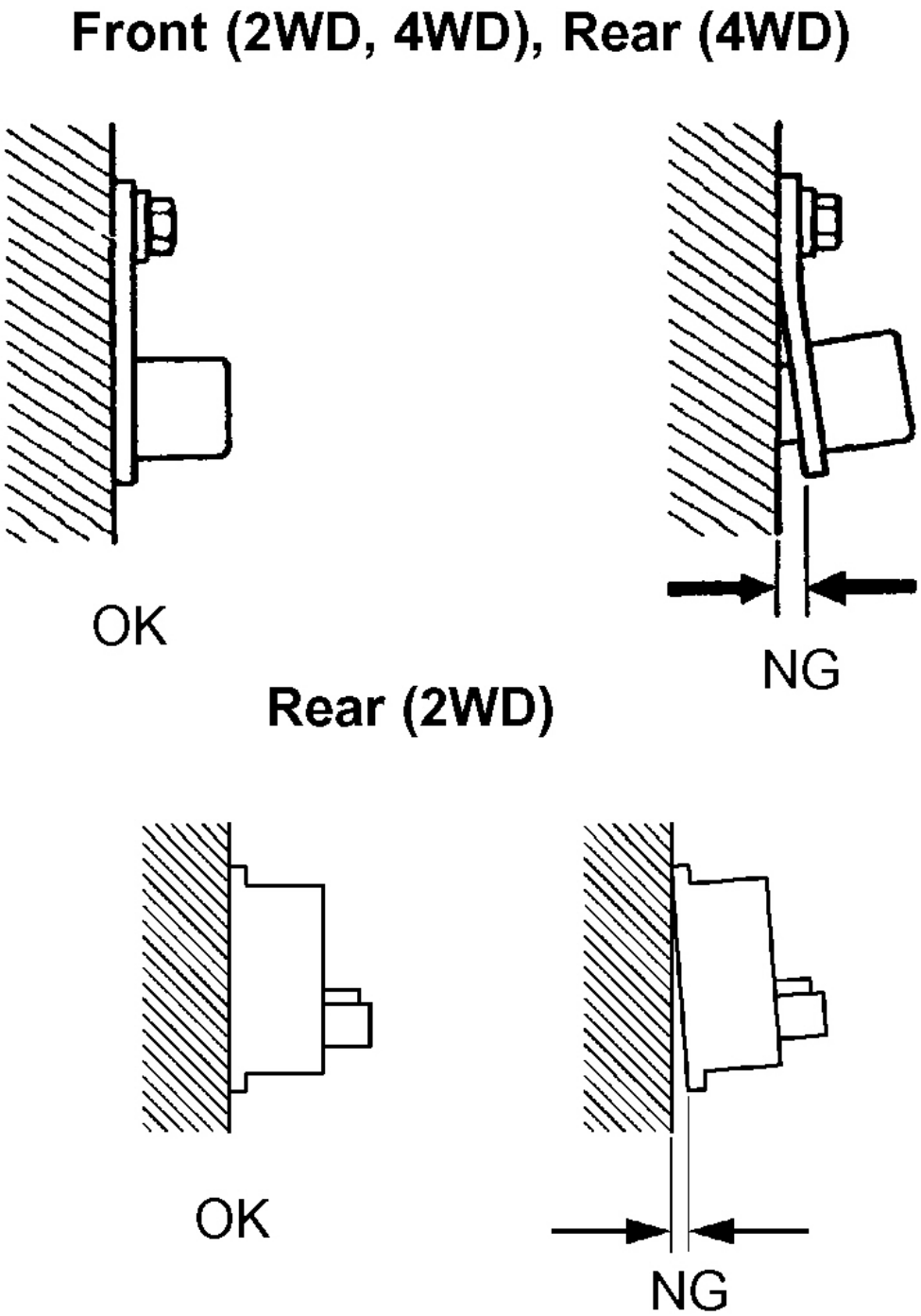

N

G02913007

cardiagn.com

Fig. 40: Checking Speed Sensor Installation
Courtesy of TOYOTA MOTOR SALES, U.S.A., INC.

NG: Replace speed sensor.

NOTE: Finally, check the speed sensor signal (see PRE-CHECK).

OK: Go to next step.

5. **Check speed sensor and sensor rotor serrations.**

(REFERENCE) INSPECTION USING OSCILLOSCOPE

PREPARATION:

Connect an oscilloscope to terminals FR+ - FR-, FL+ - FL-, RR+ - RR- and RL+ - RL- of the ABS actuator with ECU.

CHECK:

Drive the vehicle at about 20 km/h (12 mph), and check the signal waveform.

OK:

A waveform as shown in a figure should be output.

cardiagn.com

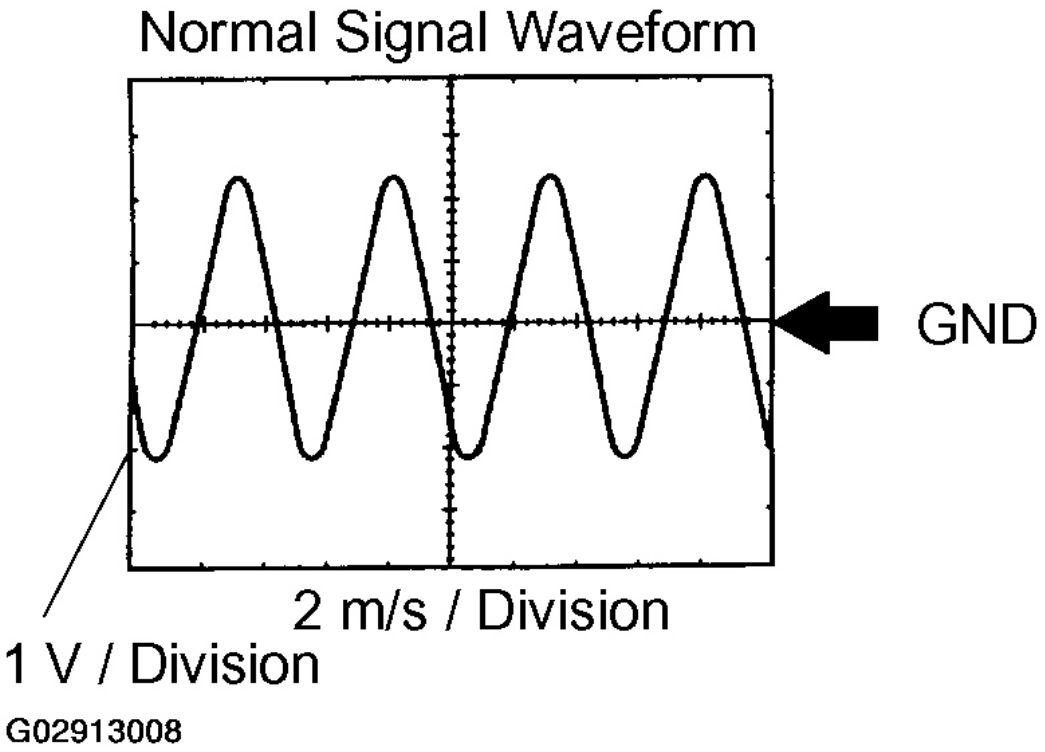

Fig. 41: Speed Sensor & Sensor Rotor Serrations Waveform
Courtesy of TOYOTA MOTOR SALES, U.S.A., INC.

HINT:

- As the vehicle speed (wheel revolution speed) increases, a cycle of the waveform becomes shorter and the fluctuation in the output voltage becomes greater.
- When noise is identified in the waveform on the oscilloscope, error signals are generated due to the speed sensor rotor's scratches, looseness or foreign matter deposited on it.

  OK: Replace brake actuator assembly.

  NOTE: When replacing the brake actuator assembly, perform the zero point calibration (see PRE-CHECK).

  NG: Go to next step.

6. **Check sensor rotor and sensor tip.**

   Front:

   PREPARATION:

cardiagn.com

Remove the front drive shaft (see **REMOVAL**).

CHECK:

Check the sensor rotor serrations.

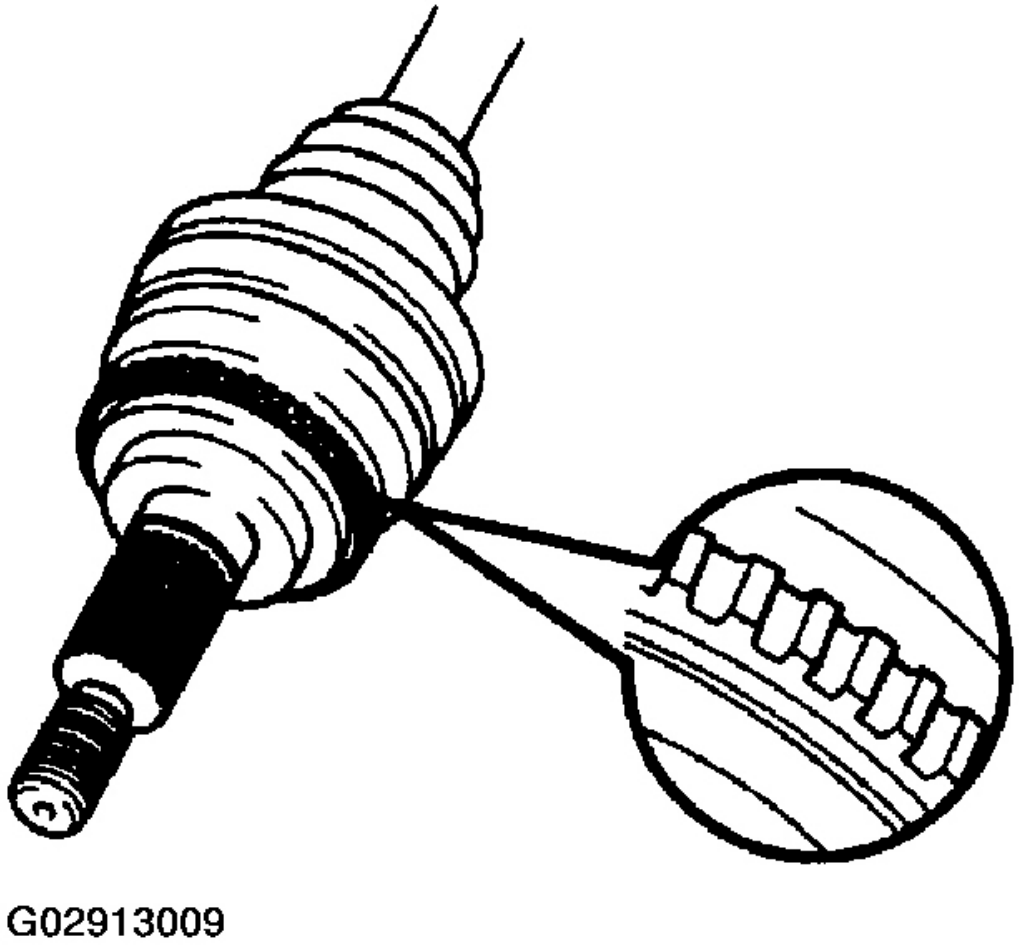

Fig. 42: Checking Sensor Rotor Serrations
Courtesy of TOYOTA MOTOR SALES, U.S.A., INC.

OK:

No scratches, missing teeth or foreign objects.

PREPARATION:

cardiagn.com

Remove the front speed sensor (see **REMOVAL**).

CHECK:

Check the sensor tip.

OK:

No scratches or foreign objects on the sensor tip.

NOTE: Finally, check the speed sensor signal (see PRE-CHECK).

Rear (2WD):

PREPARATION:

Remove the axle hub and disconnect the rear speed sensor (see **REMOVAL**).

cardiagn.com

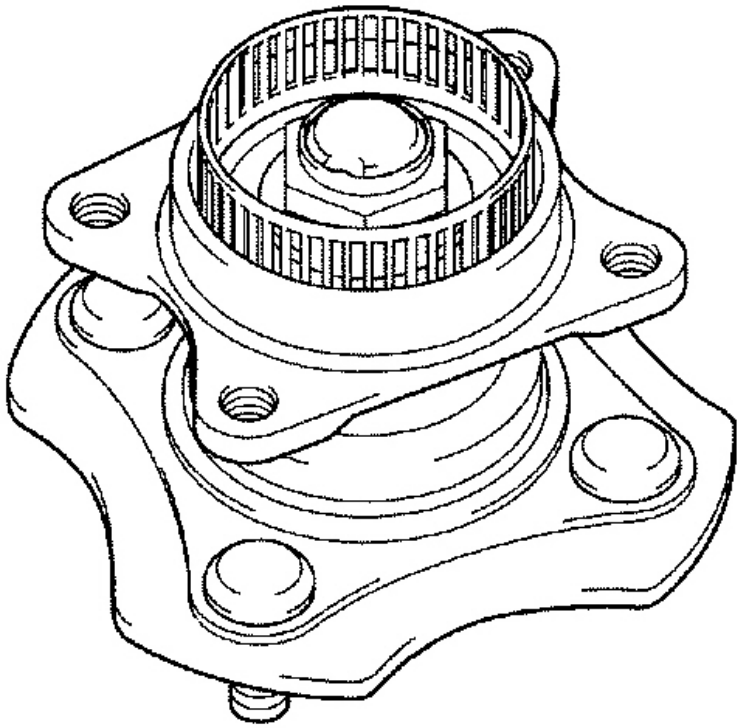

Fig. 43: Removing Axle Hub & Disconnecting Rear (2WD) Speed Sensor
Courtesy of TOYOTA MOTOR SALES, U.S.A., INC.

CHECK:

Check the sensor rotor serrations.

OK:

No scratches or missing teeth or no foreign objects.

CHECK:

Check the sensor tip.

OK:

cardiagn.com

No scratches or no foreign objects on the sensor tip.

Rear (4WD):

PREPARATION:

Remove the rear drive shaft (see **REMOVAL**).

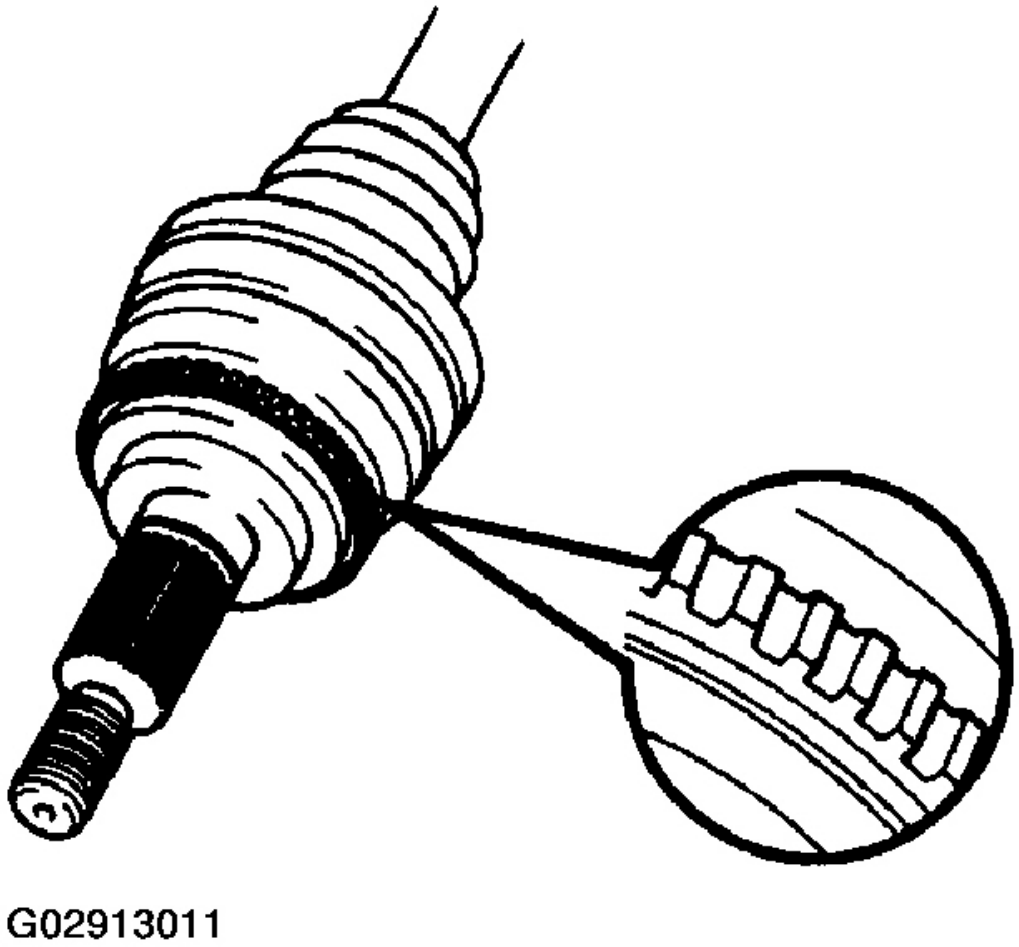

Fig. 44: Removing Rear Drive Shaft (4WD)
Courtesy of TOYOTA MOTOR SALES, U.S.A., INC.

CHECK:

Check the sensor rotor serrations.

cardiagn.com

OK:

No scratches or missing teeth or no foreign objects.

HINT:

If foreign objects are stuck to the rotor, remove them.

PREPARATION:

Remove the rear drive shaft (see **REMOVAL**).

CHECK:

Check the sensor tip.

OK:

No scratches or no foreign objects on the sensor tip.

HINT:

If foreign objects are stuck to the sensor tip, remove them before reuse. Check the rotor for the presence of foreign objects and remove them if they are stuck.

NG: Replace speed sensor or rear axle hub assembly.

NOTE: Finally, check the speed sensor signal (see PRE-CHECK).

HINT:

Remove any foreign matters if identified.

Check the output waveform again after reassembling.

OK: Replace brake actuator assembly.

NOTE: When replacing the brake actuator assembly, perform the zero point calibration (see PRE-CHECK).

DTC C0226/21, C0236/22, C0246/23, C0256/24: ABS SOLENOID CIRCUIT

CIRCUIT DESCRIPTION

This solenoid turns on when signals are received from the ECU and controls the pressure acting on the wheel cylinders to control the braking force.

cardiagn.com

DTC No.	DTC Detection Condition	Trouble Area
C0226/21	Open or short circuit of front right solenoid circuit (SFRR or SFRH) continues for 0.05 seconds or more.	• Brake actuator assembly
C0236/22	Open or short circuit of front left solenoid circuit (SFLR or SFLH) continues for 0.05 seconds or more.	
C0246/23	Open or short circuit of rear right solenoid circuit (SRRR or SRRH) continues for 0.05 seconds or more.	
C0256/24	Open or short circuit of rear left solenoid circuit (SRLR or SRLH) continues for 0.05 seconds or more.	

G02913012

Fig. 45: DTC (C0226/21, C0236/22, C0246/23, C0256/24) Table
Courtesy of TOYOTA MOTOR SALES, U.S.A., INC.

WIRING DIAGRAM

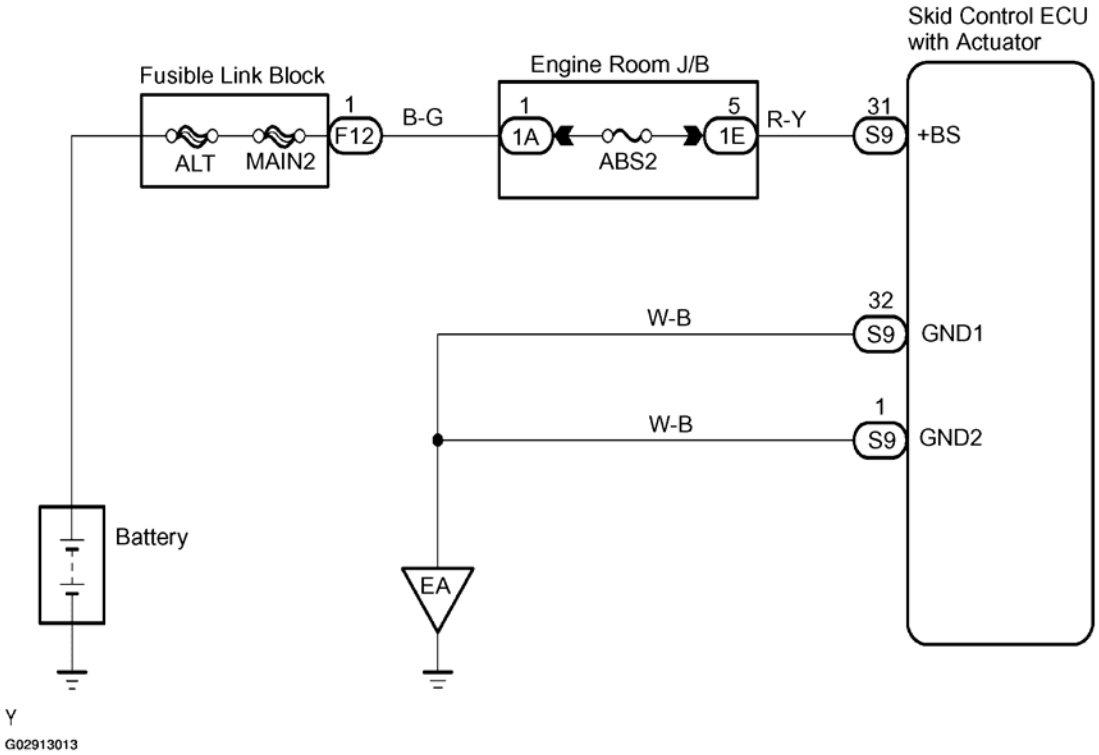

Fig. 46: ABS Solenoid Wiring Diagram
Courtesy of TOYOTA MOTOR SALES, U.S.A., INC.

INSPECTION PROCEDURE

1. **Check DTC once more (See PRE-CHECK).**

   PREPARATION:

cardiagn.com

a. Clear the DTC.
b. Turn the ignition switch OFF.

CHECK:

a. Turn the ignition switch ON.
b. Is the same DTC output again?

NO : END

YES : Replace brake actuator assembly.

NOTE: When replacing the brake actuator assembly, perform the zero point calibration (see PRE-CHECK).

DTC C0273/13, C0274/14, C1361/91: PUMP MOTOR CIRCUIT & SHORT CIRCUIT IN ABS MOTOR FAIL SAFE RELAY CIRCUIT

CIRCUIT DESCRIPTION

The ABS motor relay supplies power to the ABS pump motor. While the ABS & TRC & VSC are activated, the ECU switches the ABS motor relay ON and operates the ABS pump motor.

DTC No.	DTC Detection Condition	Trouble Area
C0273/13	• With IG1 terminal voltage at 9.0 to 17.2 V, during initial check, ABS control, TRC control VSC control or BA control, pump motor relay is turned ON, and relay contact is "OFF" for 0.12 seconds or more.	• ABS MTR relay • Brake actuator assembly
C0274/14	When pump motor relay is turned OFF, relay contact is "ON" for 4 seconds or more.	
C1361/91	• Immediately after IG1 is turned ON, when pump motor fail-safe relay is tuned OFF, relay contact is "ON" for 0.2 seconds or more.	• ABS MTR CUT relay

G02913014

Fig. 47: DTC (C0273/13, C0274/14, C1361/91) Table
Courtesy of TOYOTA MOTOR SALES, U.S.A., INC.

WIRING DIAGRAM

cardiagn.com

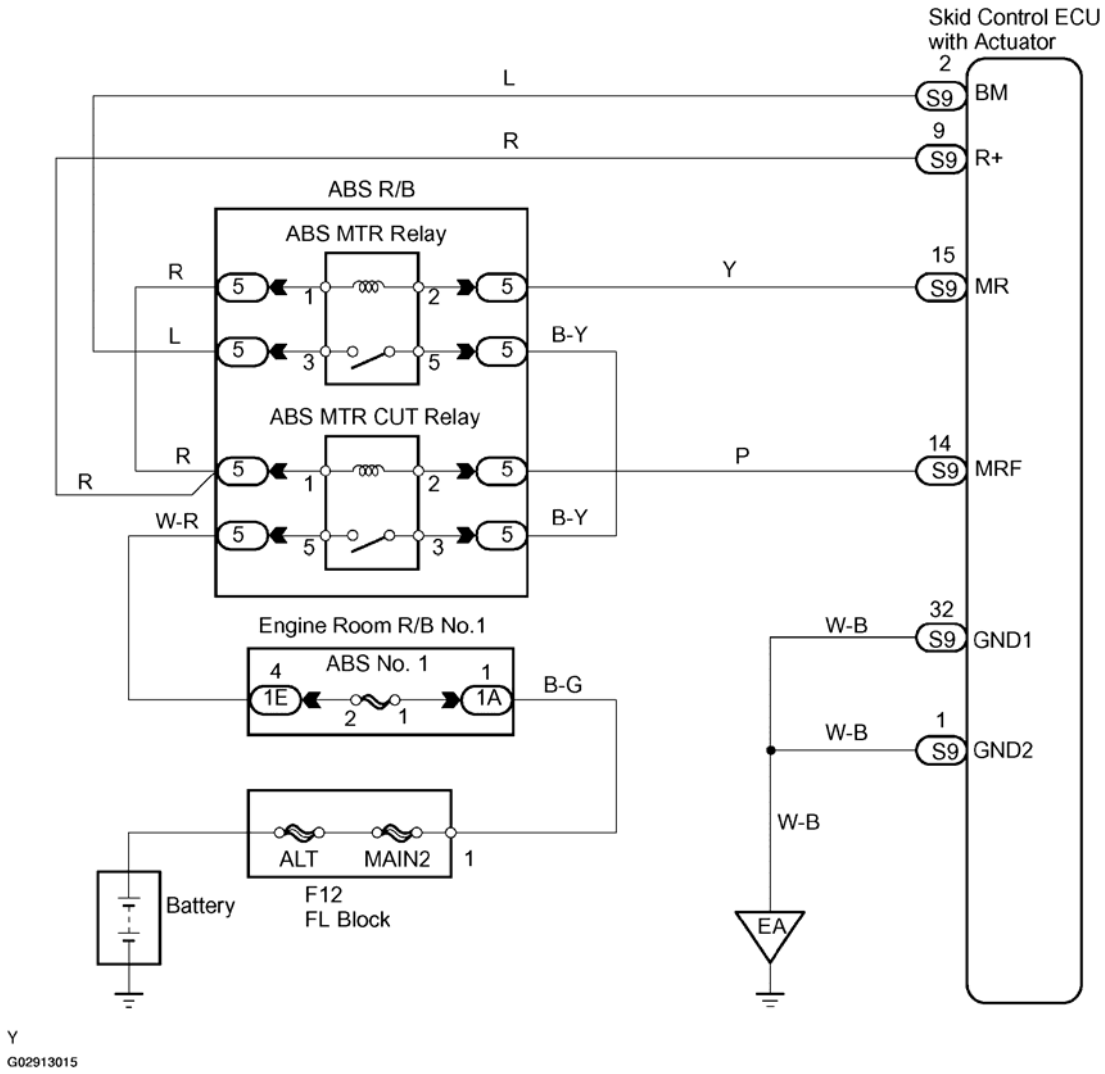

Fig. 48: ABS Motor Fail Safe & Pump Motor Wiring Diagram
Courtesy of TOYOTA MOTOR SALES, U.S.A., INC.

INSPECTION PROCEDURE

HINT:

Start the inspection from step 1 when using the hand-held tester and start from step 2 when not using the hand-held tester.

1. **Check ABS motor relay operation.**

   PREPARATION:

   a. Connect the hand-held tester to the DLC3.

cardiagn.com

b. Turn the ignition switch ON and press the hand-held tester main switch ON.
c. Select the item "ABS MTR RELAY" in the ACTIVE TEST and operating it using the hand-held tester.

CHECK:

Check the operation sound of the ABS motor relay when operating it using the hand-held tester.

OK:

The operation sound of the ABS motor relay should be heard.

OK: Replace brake actuator assembly.

NOTE: When replacing the brake actuator assembly, perform the zero point calibration (see PRE-CHECK).

NG: Go to next step.

2. **Measure voltage between terminal 5 of ABS R/B and body ground.**

PREPARATION:

a. Remove the ABS MTR relay from the ABS R/B.
b. Turn the ignition switch ON.

CHECK:

Measure the voltage between terminal 5 of the ABS R/B (for ABS MTR relay) and body ground.

cardiagn.com

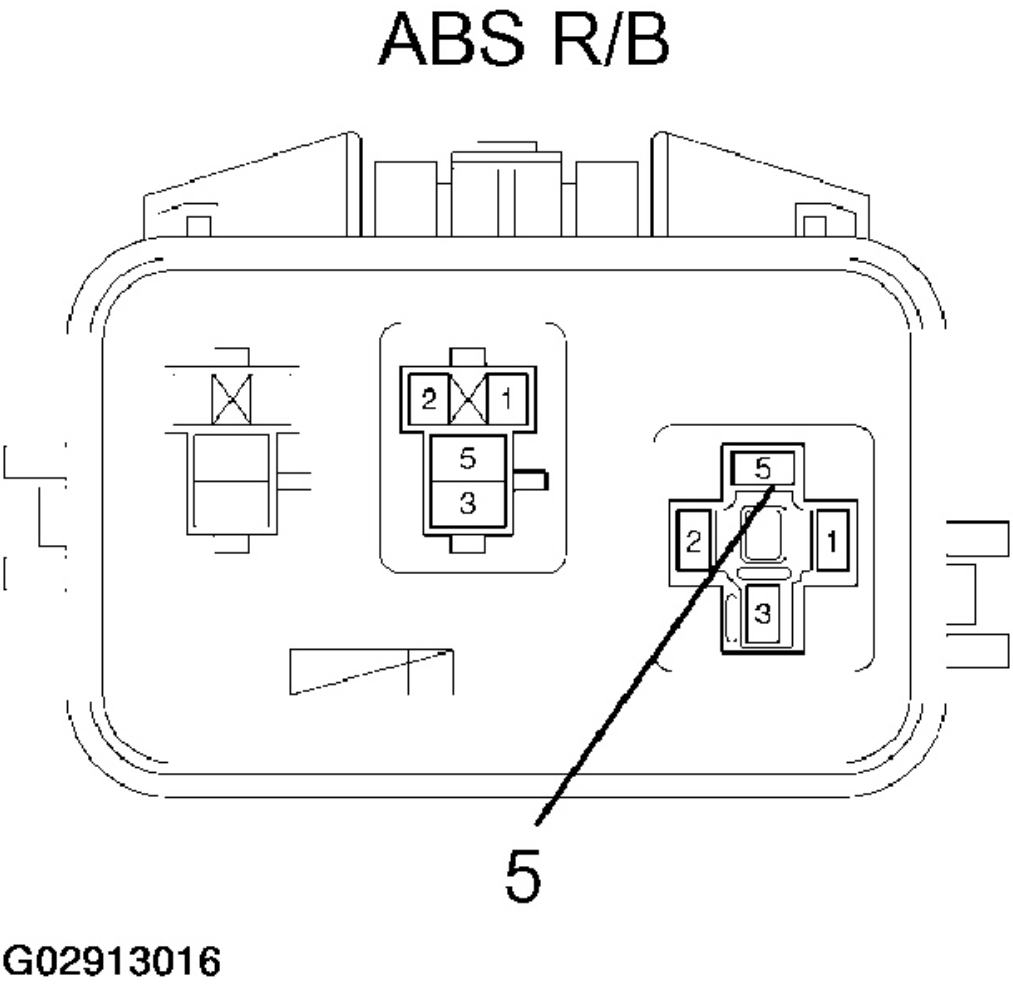

Fig. 49: Measuring Voltage Between Terminal 5 Of ABS R/B & Body Ground
Courtesy of TOYOTA MOTOR SALES, U.S.A., INC.

OK:

Voltage: 10 to 14 V

NG: Go to step 5 .
OK: Go to next step.

3. **Check ABS MTR relay.**

CHECK:

cardiagn.com

Measure the resistance between each pair of the terminal of the motor relay.

OK:

ABS MTR RELAY TESTER CONNECTION & SPECIFIED CONDITION

Tester Connection	Specified Condition
Terminals 1 and 2	Approximately 80 ohm
Terminals 3 and 5	10 kohm or higher

CHECK:

a. Apply battery positive voltage between terminals 1 and 2.
b. Measure the resistance between terminals.

cardiagn.com

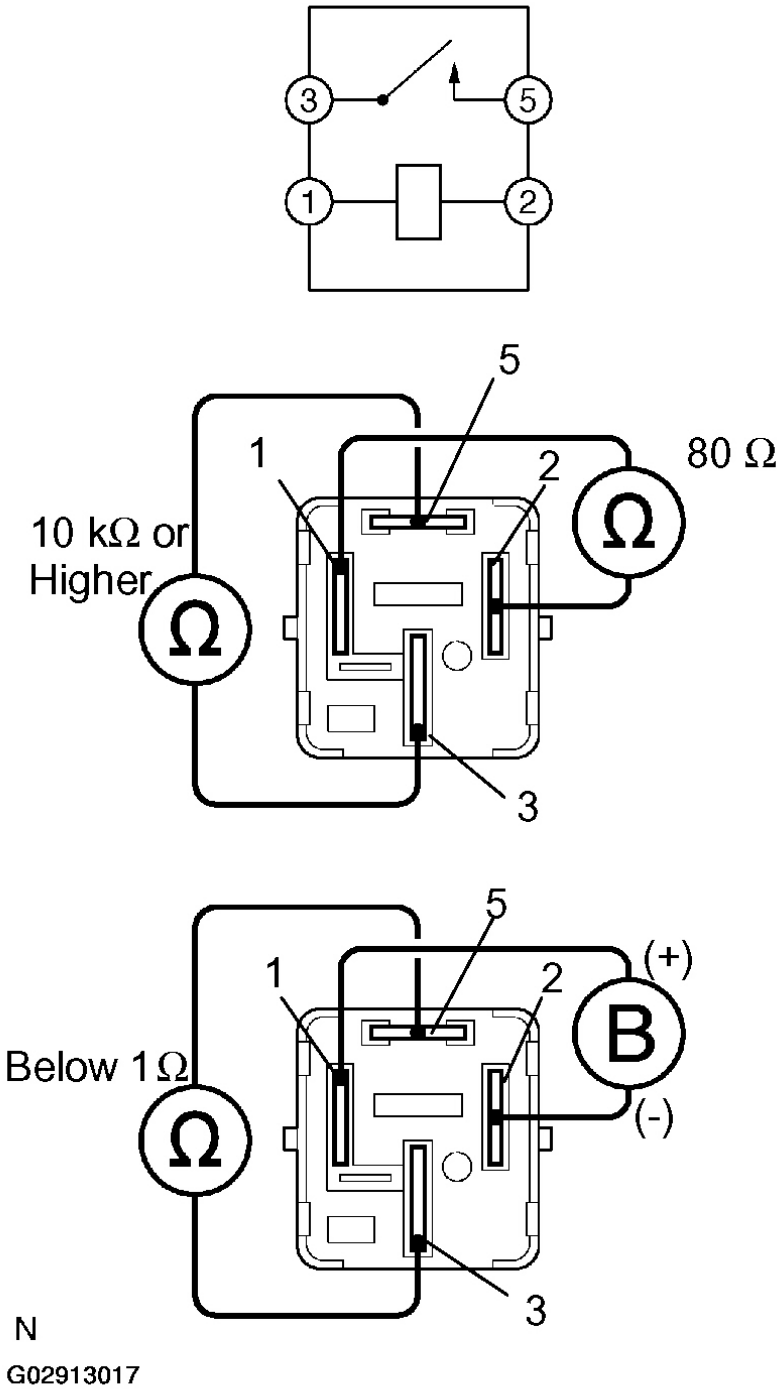

Fig. 50: Measuring Resistance Between Terminals
Courtesy of TOYOTA MOTOR SALES, U.S.A., INC.

OK:

cardiagn.com

ABS MTR RELAY TESTER CONNECTION & SPECIFIED CONDITION

Tester Connection	Specified Condition
Terminals 3 and 5	Below 1 ohm

NG: Replace ABS MTR relay.

OK: Go to next step.

4. **Check for open and short circuit in harness and connector between ABS R/B (for ABS MTR relay) and skid control ECU (See HOW TO USE THE DIAGNOSTIC CHART AND INSPECTION PROCEDURE).**

   NG: Repair or replace harness and connector.

   OK: If same code is still output after DTC is deleted, check contact condition of each connection. If connections are normal, ECU may be defective.

5. **Check ABS MTR CUT relay.**

CHECK:

Measure the resistance between each terminal of the ABS MTR CUT relay.

OK:

ABS MTR CUT RELAY TESTER CONNECTION & SPECIFIED CONDITION

Tester Connection	Specified Condition
Terminals 1 and 2	Approximately 100 ohm
Terminals 3 and 5	10 kohm or higher

CHECK:

a. Apply battery voltage between terminals 1 and 2.
b. Measure the resistance between terminals 3 and 5 of ABS MTR CUT relay.

cardiagn.com

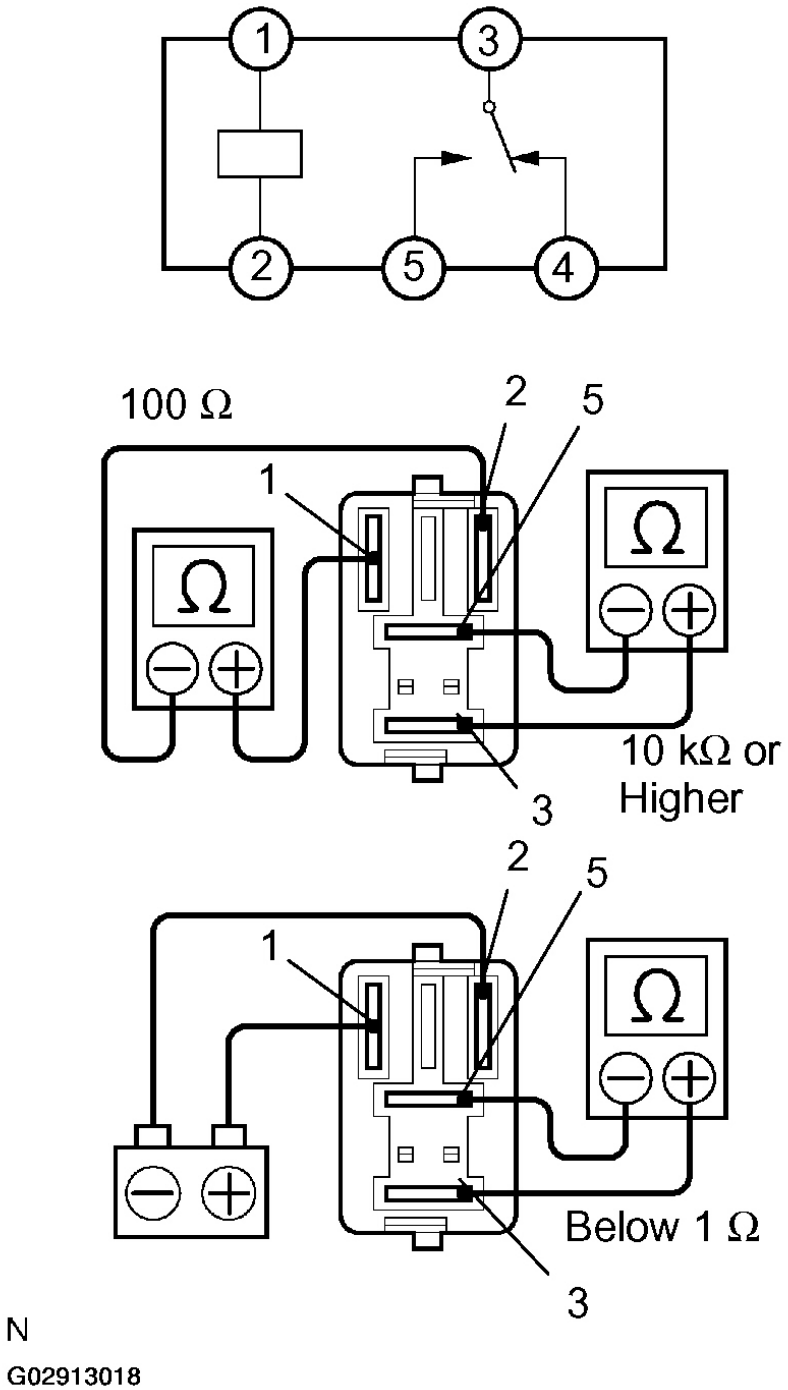

Fig. 51: Measuring Resistance Between Terminals 3 & 5 of ABS MTR Cut Relay
Courtesy of TOYOTA MOTOR SALES, U.S.A., INC.

OK:

cardiagn.com

ABS MTR CUT RELAY TESTER CONNECTION & SPECIFIED CONDITION

Tester Connection	Specified Condition
Terminals 3 and 5	Below 1 ohm

NG: Replace ABS MTR CUT relay.

OK: Go to next step.

6. **Check ABS No. 1 fuse.**

PREPARATION:

Remove the ABS No. 1 fuse from the engine room R/B No. 1.

CHECK:

Measure the resistance.

OK:

Resistance: Below 1 ohm

NG: Replace ABS No. 1 fuse.

OK: Repair or replace harness and connector.

DTC C0278/11, C0279/12: ABS SOLENOID VALVE RELAY CIRCUIT

CIRCUIT DESCRIPTION

This relay supplies power to each ABS solenoid. After the ignition switch is turned ON, if the initial check is OK, the relay turns on.

DTC No.	DTC Detection Condition	Trouble Area
C0278/11	• With IG terminal voltage at 9.5 to 17.2 V, when solenoid relay is turned on, relay contact is "OFF" for 0.2 seconds or more.	• Brake actuator assembly
C0279/12	Immediately after IG1 is turned ON, when solenoid relay is turned OFF, relay contact is "ON" for 0.2 seconds or more.	

G02913019

Fig. 52: DTC (C0278/11, C0279/12) Table
Courtesy of TOYOTA MOTOR SALES, U.S.A., INC.

WIRING DIAGRAM

cardiagn.com

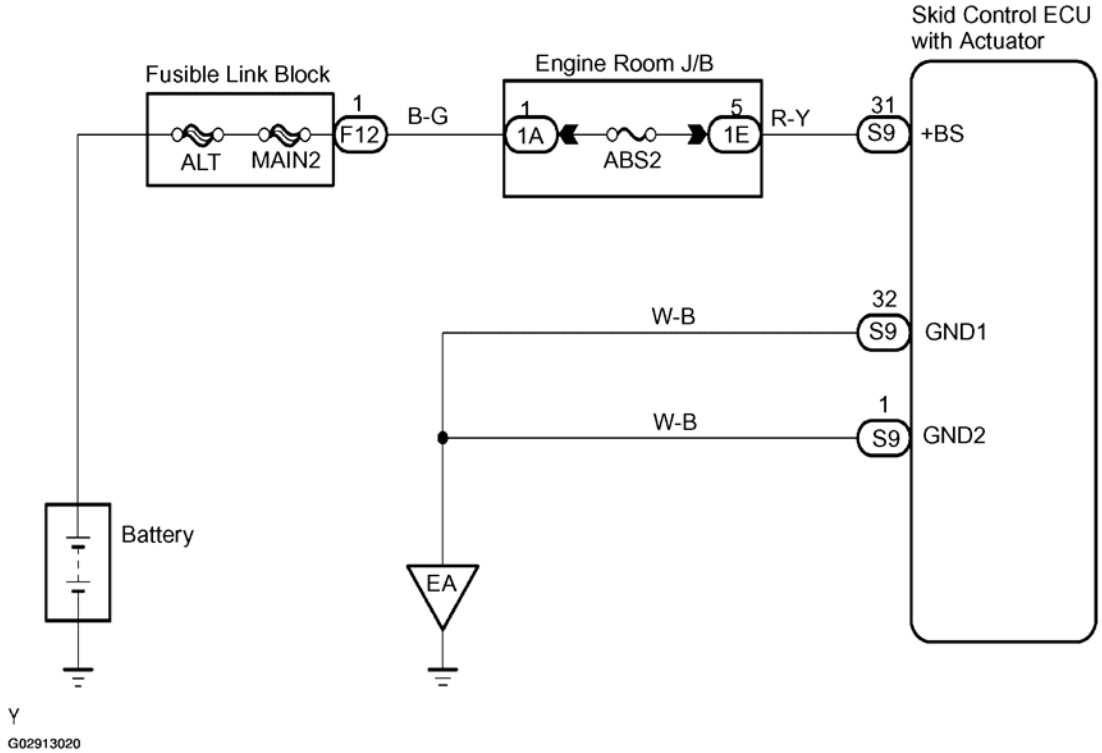

Fig. 53: ABS Solenoid Valve Wiring Diagram
Courtesy of TOYOTA MOTOR SALES, U.S.A., INC.

INSPECTION PROCEDURE

1. **Measure voltage between terminals +BS and GND1 of brake actuator connector.**

   PREPARATION:

   Disconnect the brake actuator connector.

   CHECK:

   Measure the voltage between terminals +BS and GND1 of the brake actuator harness side connector.

cardiagn.com

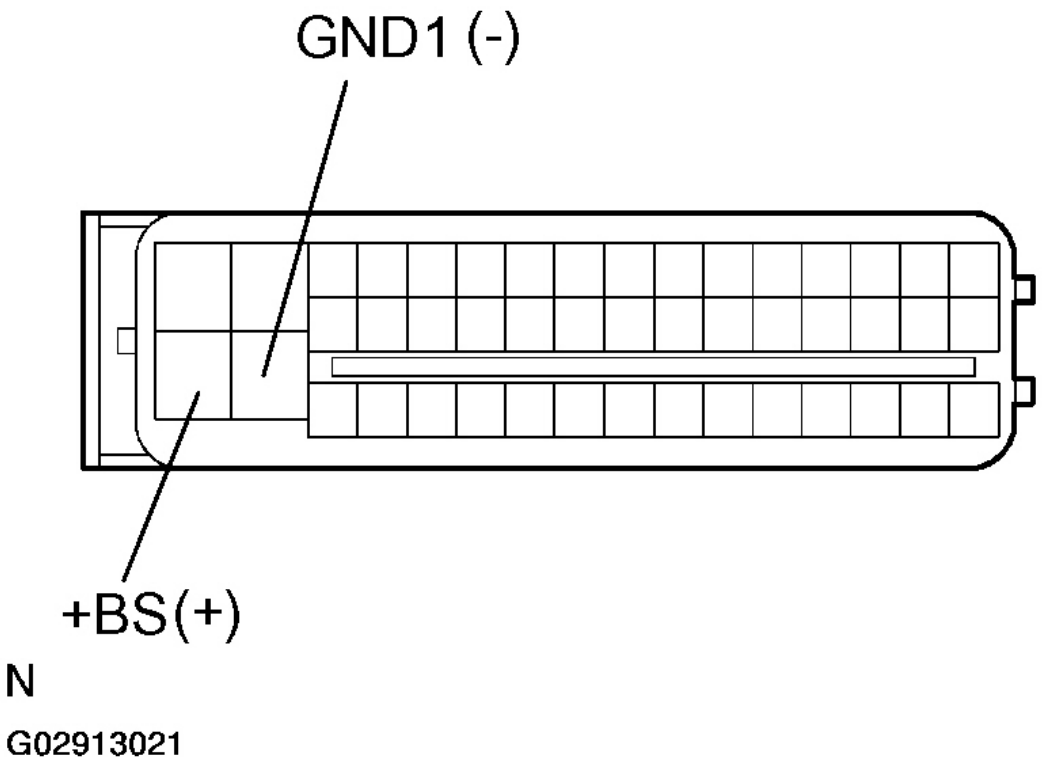

Fig. 54: Measuring Voltage Between Terminals +BS And GND1 Of Brake Actuator Harness Side Connector
Courtesy of TOYOTA MOTOR SALES, U.S.A., INC.

OK:

Voltage: 10 to 14 V

NG: Go to step 2.

OK: If same code is still output after DTC is deleted, check contact condition of each connection. If connections are normal, ECU may be defective.

2. **Check ABS2 fuse.**

PREPARATION:

Remove the ABS2 fuse from the engine room J/B.

CHECK:

Measure the resistance.

cardiagn.com

OK:

Resistance: Below 1 ohm

NG: Replace ABS2 fuse.
OK: Go to next step.

3. **Measure resistance between terminal GND1 of skid control ECU connector and body ground.**

PREPARATION:

Disconnect the brake actuator connector.

CHECK:

Measure the resistance between terminal GND1 of the skid control ECU harness side connector and body ground.

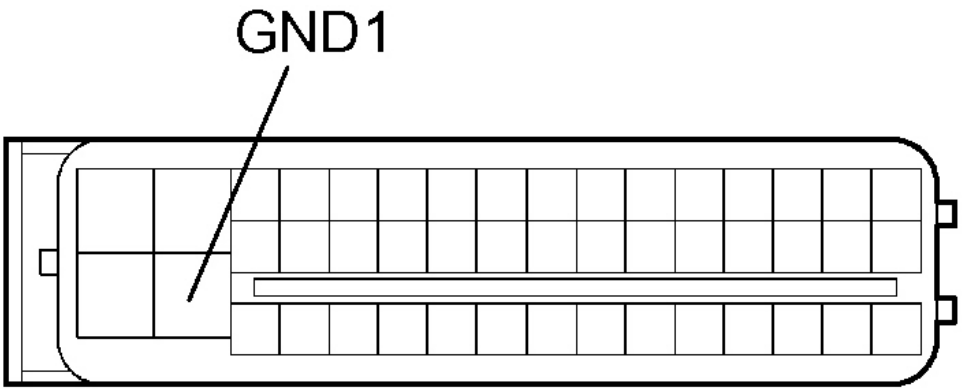

N

G02913022

Fig. 55: Measuring Resistance Between Terminals GND1 Of Skid Control ECU Harness Side Connector & Body Ground
Courtesy of TOYOTA MOTOR SALES, U.S.A., INC.

OK:

cardiagn.com

Resistance: Below 1 ohm

OK: Replace brake actuator assembly.

NOTE: When replacing the brake actuator assembly, perform the zero point calibration (see PRE-CHECK).

NG: Repair or replace harness and connector.

DTC C1201/51: ENGINE CONTROL SYSTEM MALFUNCTION

CIRCUIT DESCRIPTION

If trouble occurs in the engine control system, the ECU prohibits TRC and VSC control.

DTC No.	DTC Detection Condition	Trouble Area
C1201/51	At engine speed of 500 rpm or more, trouble signal in engine control system continues for 5 seconds or more.	• Engine control system • Wire harness

G02913023

Fig. 56: DTC (C1201/51) Table
Courtesy of TOYOTA MOTOR SALES, U.S.A., INC.

INSPECTION PROCEDURE

1. **Check DTC for engine (See PRE-CHECK).**

IDENTIFYING CODE

A	Output NG code
B	Output normal code

B: Replace ECM.
A: Repair engine control system according to code output.

DTC C1203/53: MALFUNCTION IN ECM COMMUNICATION CIRCUIT

CIRCUIT DESCRIPTION

The circuit is used to send TRAC & VSC control information from the skid control ECU to the ECM (TRC+, TRC-), and engine control information from the ECM to the skid control ECU (ENG+, ENG-).

cardiagn.com

DTC No.	DTC Detection Condition	Trouble Area
C1203/53	• When IG1 terminal voltage is 9.5 V or more, condition that data is not transmitted to ECM continues for more than 5 seconds • When ECU IG1 terminal voltage is 9.5 V or more and engine speed is 500 rpm or more, data reception from ECM is impossible for 5 seconds or more. • The condition that data transmission and reception to/from ECM is impossible once or more within 5 seconds repeatedly occurs to times. • When data about engine, drive system, and user country from ECM are not match up to skid control ECU.	• TRC+ or TRC- circuit • ENG+ or ENG- circuit • Brake actuator assembly • ECM

G02913024

Fig. 57: DTC (C1203/53) Table
Courtesy of TOYOTA MOTOR SALES, U.S.A., INC.

WIRING DIAGRAM

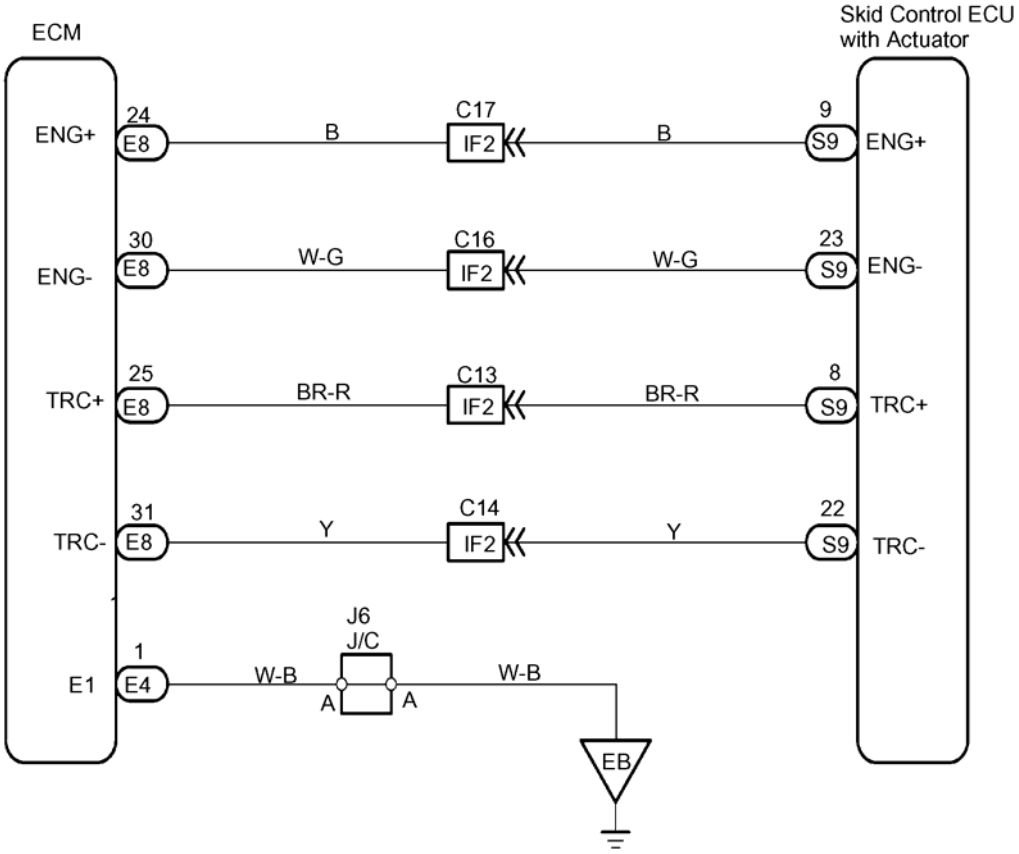

Y
G02913025

Fig. 58: Malfunction In ECM Communication Wiring Diagram
Courtesy of TOYOTA MOTOR SALES, U.S.A., INC.

INSPECTION PROCEDURE

cardiagn.com

1. **Check for open and short circuit in harness and connector between skid control ECU and ECM (See HOW TO USE THE DIAGNOSTIC CHART AND INSPECTION PROCEDURE).**

   NG: Repair or replace harness and connector.

   OK: Go to next step.

2. **Check for open and short circuit in harness and connector between terminal E1 of ECM and body ground (See HOW TO USE THE DIAGNOSTIC CHART AND INSPECTION PROCEDURE).**

   PREPARATION:

   a. Remove the glove compartment (see **COMPONENTS**).
   b. Disconnect the ECM from the heater control assembly.
   c. Turn the ignition switch ON.

   CHECK:

   Measure the resistance between terminal E1 of the ECM connector and body ground.

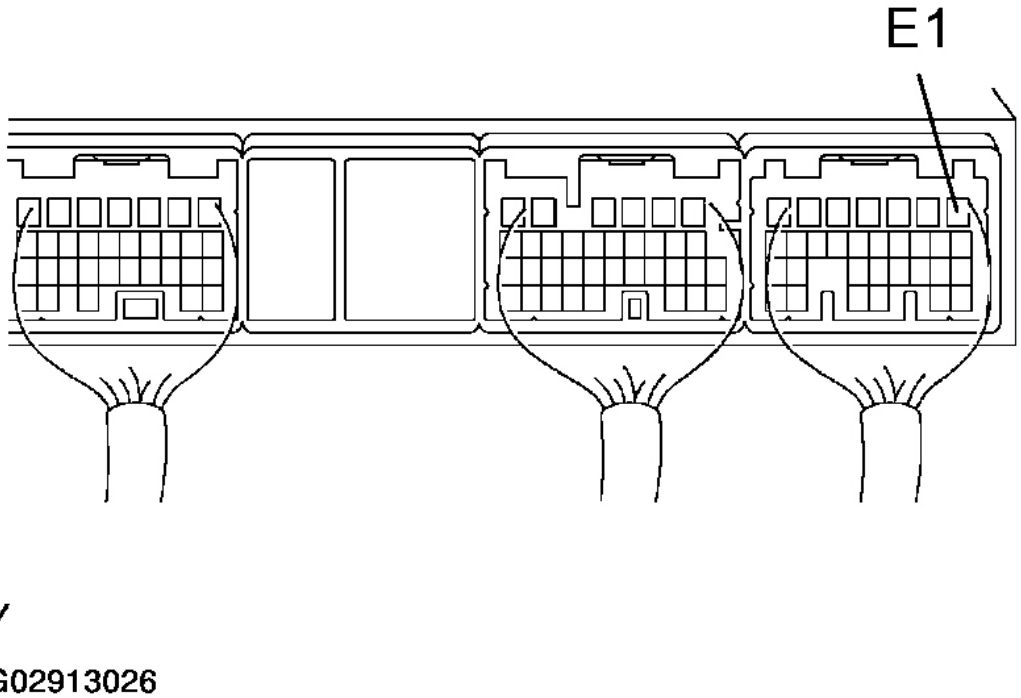

Fig. 59: Measuring Resistance Between Terminal E1 Of ECM Connector & Body Ground
Courtesy of TOYOTA MOTOR SALES, U.S.A., INC.

OK:

cardiagn.com

Resistance: Below 1 ohm

NG: Repair or replace harness and connector.

OK: Replace brake actuator assembly.

NOTE: When replacing the brake actuator assembly, perform the zero point calibration (see PRE-CHECK).

DTC C1210/36, C1336/39: ZERO POINT CALIBRATION DECELERATION SENSOR UNDONE & ZERO POINT CALIBRATION MALFUNCTION IN YAW RATE SENSOR UNDONE

CIRCUIT DESCRIPTION

The deceleration sensor is included in the yaw rate sensor.

DTC No.	DTC Detection Condition	Trouble Area
C1210/36	When any of following 1. through 2. is detected: 1. After replacing skid control ECU or erasing DTC, when shift lever is moved other than to P position within 15 seconds soon after ECU terminal IG1 become ON for the first time. 2. When yaw rate sensor zero point recorded in ECU is deleted.	• Yaw rate sensor • Yaw rate sensor circuit • Zero point calibration not done
C1336/39	At the initial time after replacing computer, or after erasing the deceleration sensor memory by operating terminals TS and CG of DLC3, ignition is turned ON and the vehicle is driven in any mode except for test mode.	

G02913027

Fig. 60: DTC (C1210/36, C1336/39) Table
Courtesy of TOYOTA MOTOR SALES, U.S.A., INC.

WIRING DIAGRAM

cardiagn.com

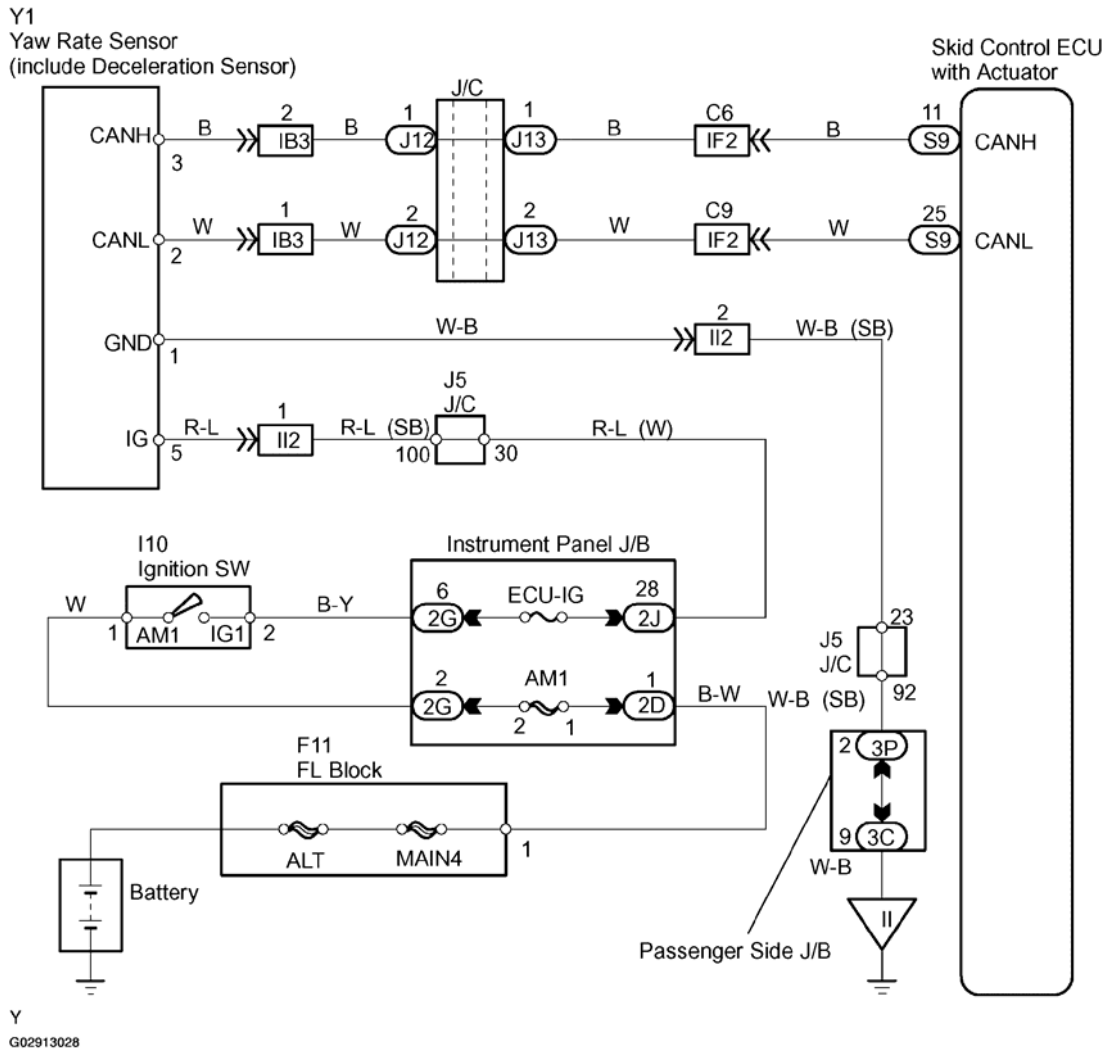

Fig. 61: Zero Point Calibration Malfunction In Yaw Rate Sensor Wiring Diagram
Courtesy of TOYOTA MOTOR SALES, U.S.A., INC.

INSPECTION PROCEDURE

HINT:

When U0073/94, U0123/62, U0124/95 or U0126/63 is output accompanied with C1210/36 or C1336/39, inspect and repair the trouble areas indicated by U0073/94, U0123/62, U0124/95 or U0126/63 first.

1. **Check installation condition of yaw rate sensor.**

   NG: Repair or replace yaw rate sensor.

   OK: Go to next step.

2. **Perform zero point calibration of yaw rate sensor and deceleration sensor (See PRE-CHECK).**

   Go to next step.

cardiagn.com

3. **Check DTC once more.**

PREPARATION:

a. Clear the DTC (see **PRE-CHECK**).
b. Turn the ignition switch OFF.

CHECK:

a. Turn the ignition switch ON.
b. Is the same DTC output again?
NO : END
YES : Replace yaw rate sensor.

NOTE: When replacing the brake actuator assembly, perform the zero point calibration (see PRE-CHECK).

DTC C1223/43: ABS CONTROL SYSTEM MALFUNCTION

CIRCUIT DESCRIPTION

DIAGNOSTIC TROUBLE CODES-(C1223/43)

DTC No.	DTC Detection Condition	Trouble Area
C1223/43	ABS control system is abnormal.	ABS control system

INSPECTION PROCEDURE

1. **Check DTC for the ABS (See PRE-CHECK).**

IDENTIFYING CODES FOR ABS

A	Output NG code
B	ABS warning light remains ON

B: Check ABS warning light circuit.
A: Repair ABS control system according to code output.

DTC C1224/44: NEO SIGNAL CIRCUIT

CIRCUIT DESCRIPTION

The skid control ECU receives engine revolution speed signals (NEO signals) from the ECM.

cardiagn.com

DTC No.	DTC Detection Condition	Trouble Area
C1224/44	Detection of either condition 1. or 2.: 1. When vehicle speed is 30 km/h (19 mph) or more and data reception from ECM is in normal condition, open or short circuit of engine revolution signal continues for 10 seconds or more. 2. When TRAC is in operation, open or short circuit of engine revolution signal continues for 0.24 seconds or more.	• NEO circuit • ECM

G02913029

Fig. 62: DTC (C1224/44) Table
Courtesy of TOYOTA MOTOR SALES, U.S.A., INC.

WIRING DIAGRAM

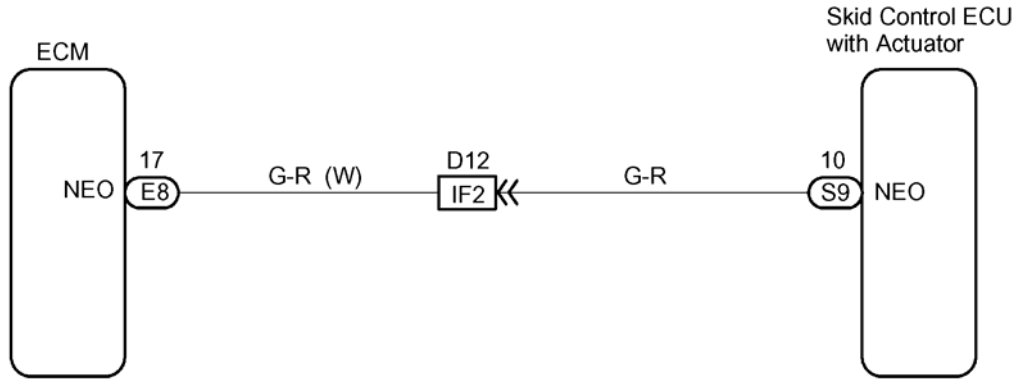

Y
G02913030

Fig. 63: NEO Wiring Diagram
Courtesy of TOYOTA MOTOR SALES, U.S.A., INC.

INSPECTION PROCEDURE

1. **Check for open and short circuit in harness and connector between terminal NEO of skid control ECU and terminal NEO of ECM (See HOW TO USE THE DIAGNOSTIC CHART AND INSPECTION PROCEDURE).**

   NG: Repair or replace harness and connector.

   OK: Go to next step.

2. **Measure voltage between terminal NEO of ECM and body ground.**

   CHECK:

   Measure the voltage between terminal NEO of the ECM and body ground for the engine conditions in **ENGINE CONDITION & VOLTAGE IDENTIFICATION** .

cardiagn.com

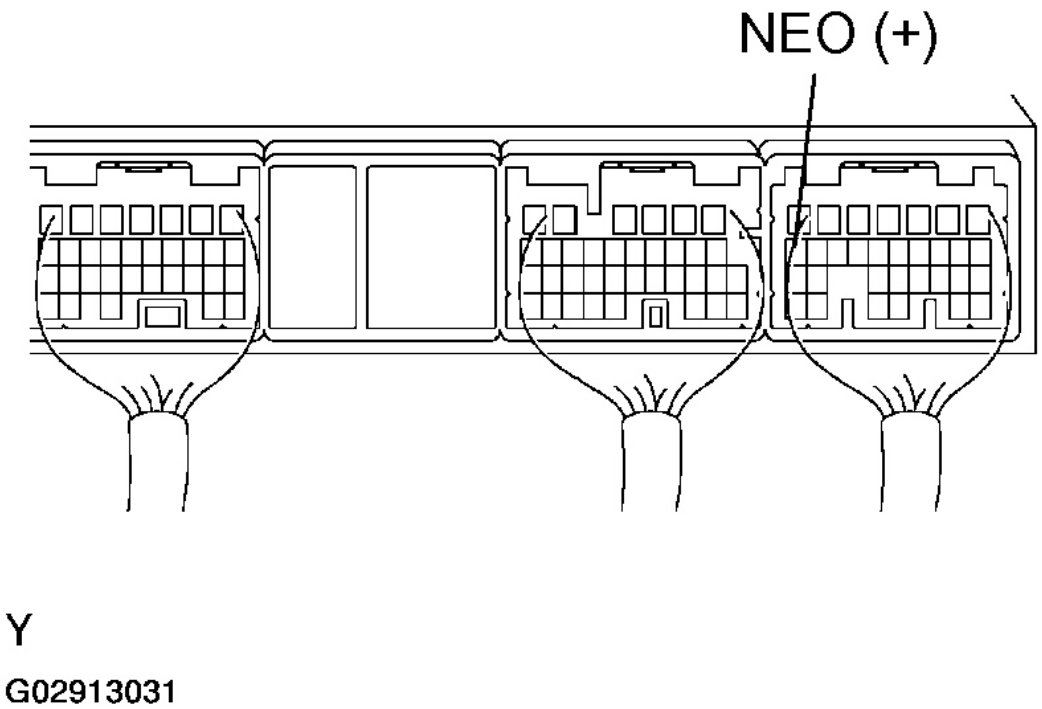

Fig. 64: Measuring Voltage Between Terminal NEO Of ECM & Body Ground
Courtesy of TOYOTA MOTOR SALES, U.S.A., INC.

OK:

ENGINE CONDITION & VOLTAGE IDENTIFICATION

Engine Condition	Voltage
OFF (ignition switch ON)	10 to 14 V or below 1 V
ON (Idling)	10 to 14 V <-> Below 1 V (Pulse)

cardiagn.com

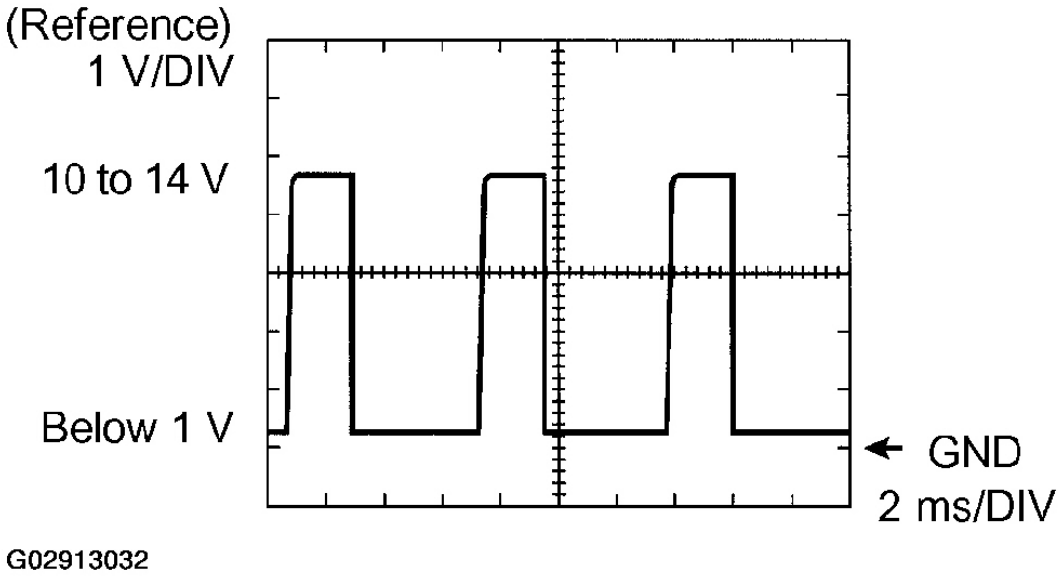

Fig. 65: NEO Of ECM Voltage Wave Form
Courtesy of TOYOTA MOTOR SALES, U.S.A., INC.

NG: Replace ECM.

OK: If same code is still output after DTC is deleted, check contact condition of each connection.

DTC C1225/25: VSC SOLENOID CIRCUIT

CIRCUIT DESCRIPTION

This solenoid turns on when signals are received from the ECU and controls the pressure acting on the wheel cylinders to control the braking force.

DTC No.	DTC Detection Condition	Trouble Area
C1225/25	Detection of any of conditions 1. to 4.: 1. When SM1 or SM2 is ON, excessive electric current on SM1 or SM2 continues for 0.05 seconds or more. 2. When SM1 or SM2 is OFF, open circuit of SM1 or SM2 continues for 0.05 seconds or more. 3. When SM1 or SM2 is ON, open circuit of SM1 or SM2 continues for 0.1 seconds or more. 4. When SM1 or SM2 is OFF, electric current application on SM1 or SM2 continues for 0.1 seconds or more.	• Brake actuator assembly • VSC solenoid circuit

G02913033

Fig. 66: DTC (C1225/25) Table
Courtesy of TOYOTA MOTOR SALES, U.S.A., INC.

cardiagn.com

WIRING DIAGRAM

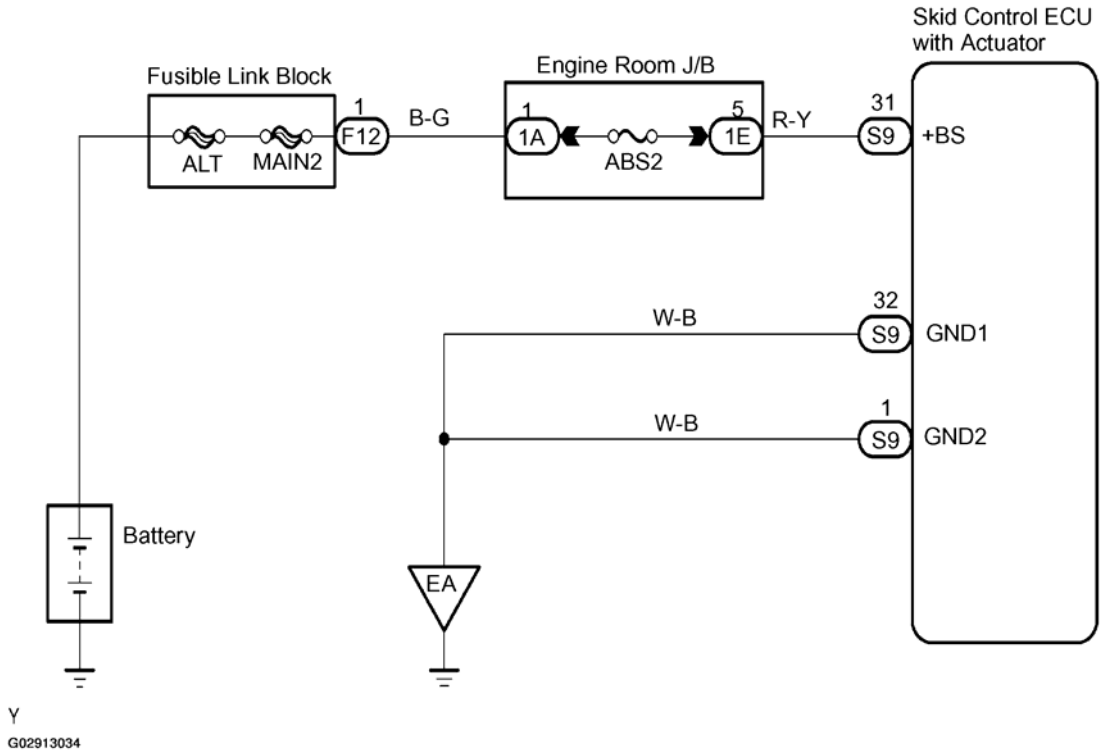

Fig. 67: VSC Solenoid Wiring Diagram
Courtesy of TOYOTA MOTOR SALES, U.S.A., INC.

INSPECTION PROCEDURE

1. **Check DTC once more (See PRE-CHECK).**

   PREPARATION:

   a. Clear the DTC.
   b. Turn the ignition switch OFF.

   CHECK:

   a. Turn the ignition switch ON.
   b. Is the same DTC output again?
      NO : END
      YES : Replace brake actuator assembly.

   NOTE: When replacing the brake actuator assembly, perform the zero point calibration (see PRE-CHECK).

cardiagn.com

DTC C1231/31: STEERING ANGLE SENSOR CIRCUIT

CIRCUIT DESCRIPTION

The steering angle sensor signal is sent to the skid control ECU through the CAN communication system. When there is malfunction in communication, it will be detected by the diagnosis function of the CAN communication system.

DTC No.	DTC Detection Condition	Trouble Area
C1231/31	When ECU IG1 terminal voltage is 9.5 V or more, ECU does not receive data from steering angle sensor for 1 second or more.	• Steering angle sensor • Steering angle sensor circuit • Power source circuit

G02913035

Fig. 68: DTC (C1231/31) Table
Courtesy of TOYOTA MOTOR SALES, U.S.A., INC.

WIRING DIAGRAM

cardiagn.com

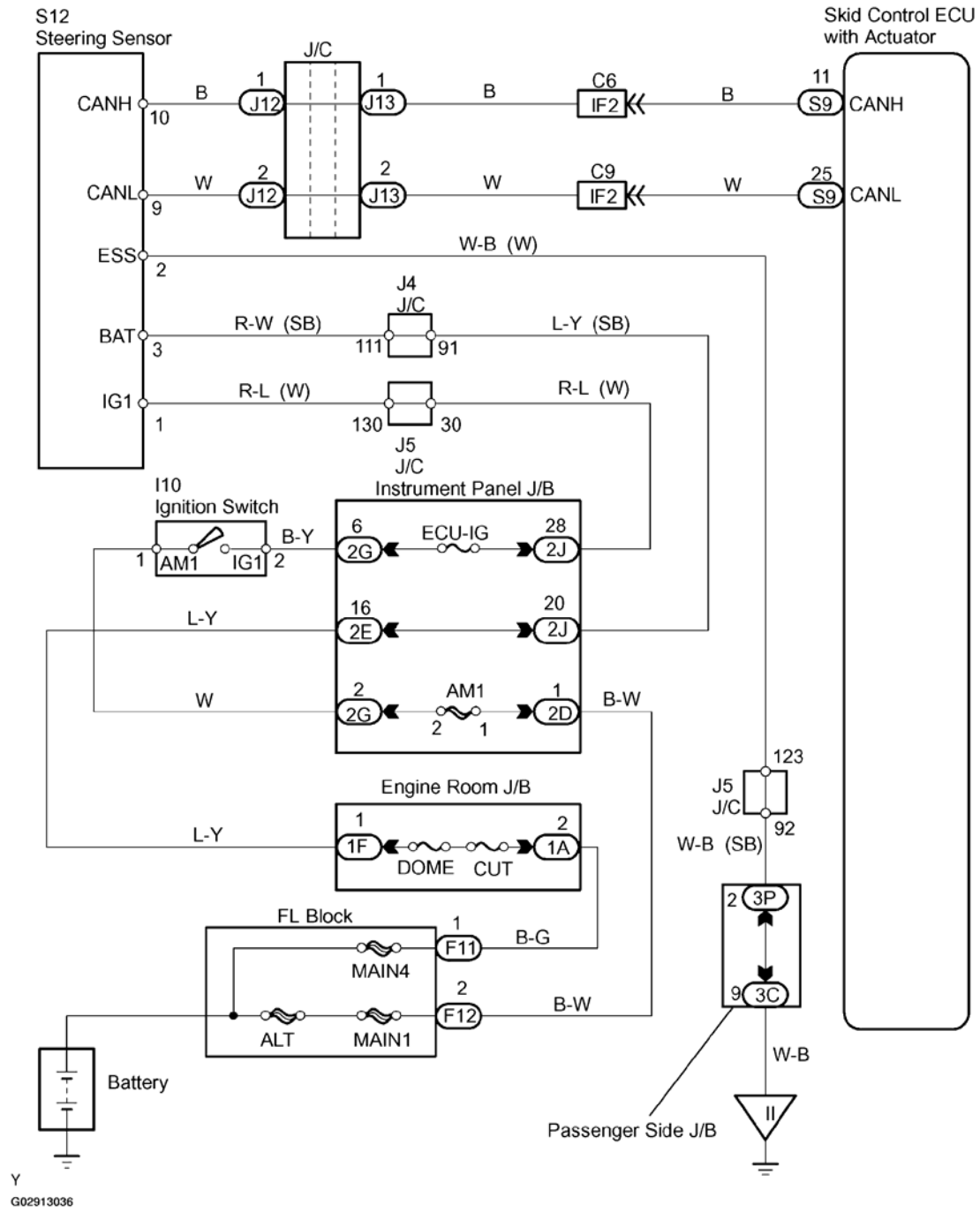

Fig. 69: Steering Angle Sensor Wiring Diagram
Courtesy of TOYOTA MOTOR SALES, U.S.A., INC.

INSPECTION PROCEDURE

HINT:

cardiagn.com

- When U0073/94, U0123/62, U0124/95 or U0126/63 is output accompanied with C1231/31, inspect and repair the trouble areas indicated by U0073/94, U0123/62, U0124/95 or U0126/63 first.
- When the speed sensor or the yaw rate sensor has trouble, DTCs for the steering angle sensor may be output even when the steering angle sensor is normal. When DTCs for the speed sensor or yaw rate sensor are output accompanied with other DTCs for the steering angle sensor, inspect and repair the speed sensor and yaw rate sensor first, and then inspect and repair the steering angle sensor.

1. **Measure input voltage of steering angle sensor.**

   PREPARATION:

   a. Remove the steering wheel and column lower cover (see **REMOVAL**).
   b. Disconnect the steering angle sensor connector.

   CHECK:

   a. Turn the ignition switch ON.
   b. Measure the voltage between terminals 1 and 2, 2 and 3 of the steering angle sensor harness side connector.

cardiagn.com

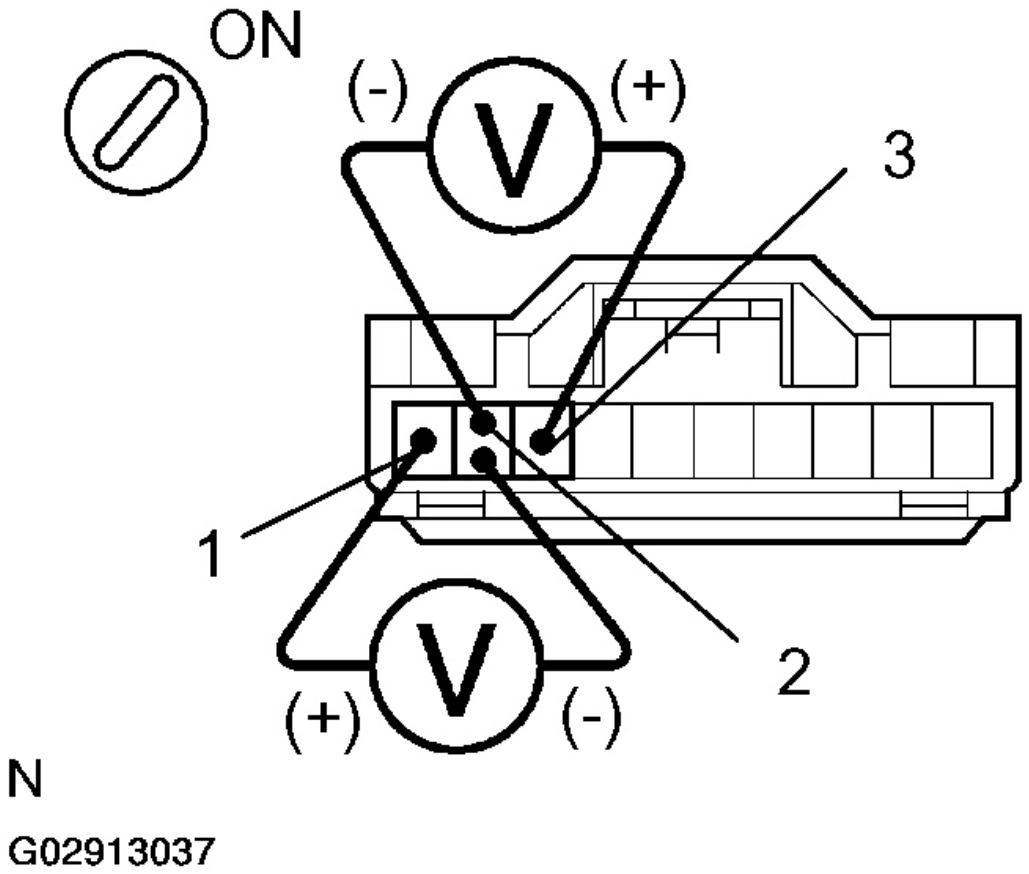

Fig. 70: Measuring Voltage Between Terminals 1 & 2, 2 & 3 Of Steering Angle Sensor Harness Side Connector
Courtesy of TOYOTA MOTOR SALES, U.S.A., INC.

OK:

Voltage: 10 to 14 V

NG: Repair or replace harness and connector.

OK: Replace steering angle sensor.

DTC C1232/32, C1234/34, C1243/43, C1244/44, C1245/45, C1381/97: DECELERATION SENSOR CIRCUIT, YAW RATE SENSOR CIRCUIT, MALFUNCTION IN DECELERATION SENSOR & MALFUNCTION IN POWER SUPPLY VOLTAGE YAW/DECELERATION SENSOR

CIRCUIT DESCRIPTION

cardiagn.com

The deceleration sensor is included in the yaw rate sensor.

The deceleration sensor and yaw rate sensor signal is sent to the skid control ECU through the CAN communication system.

When there is malfunction in communication, it will be detected by the diagnosis function of the CAN communication system.

DTC No.	DTC Detection Condition	Trouble Area
C1232/32	When lateral deceleration output turns 4.8 V or more or 0.2 V or less per 0.5 seconds.	• Deceleration sensor • Deceleration sensor circuit
C1234/34	Yaw rate sensor malfunction signal is received	• Yaw rate sensor • Yaw rate sensor circuit
C1243/43	While vehicle speed becomes 0 km/h (0 mph) from 30 km/h (18 mph) or more, condition that both GL1 and GL2 signals of ECU terminals do not change 2 LSB or more continues in sequence 16 times.	• Yaw rate sensor • Wire harness for deceleration sensor system
C1244/44	• With vehicle speed at 0 km/h (0 mph), after deference of output absolute value of G conversion value between deceleration sensor terminals GL1 and GL2 becomes 0.6 G or more, and condition that does not become 0.4 G continues for 60 seconds or more. • Deceleration sensor malfunction signal is received.	• Yaw rate sensor • Yaw rate sensor circuit
C1245/45	At vehicle speed of 30 km/h (18 mph) or more, acceleration and deceleration values calculated from deceleration sensor values and from vehicle speed are different, and the condition that difference exceeds 0.35 G continues for 60 seconds or more.	• Yaw rate sensor • Wire harness for deceleration sensor system
C1381/97	With vehicle speed at 3 km/h or more, malfunction signal of deceleration sensor terminal IG1 is received for 10 seconds or more.	• Battery • Charging system • Power source circuit

G02913038

Fig. 71: DTC (C123/32, C1234/34, C1243/43, C1244/44, C1245/45, C1381/97) Table
Courtesy of TOYOTA MOTOR SALES, U.S.A., INC.

WIRING DIAGRAM

cardiagn.com

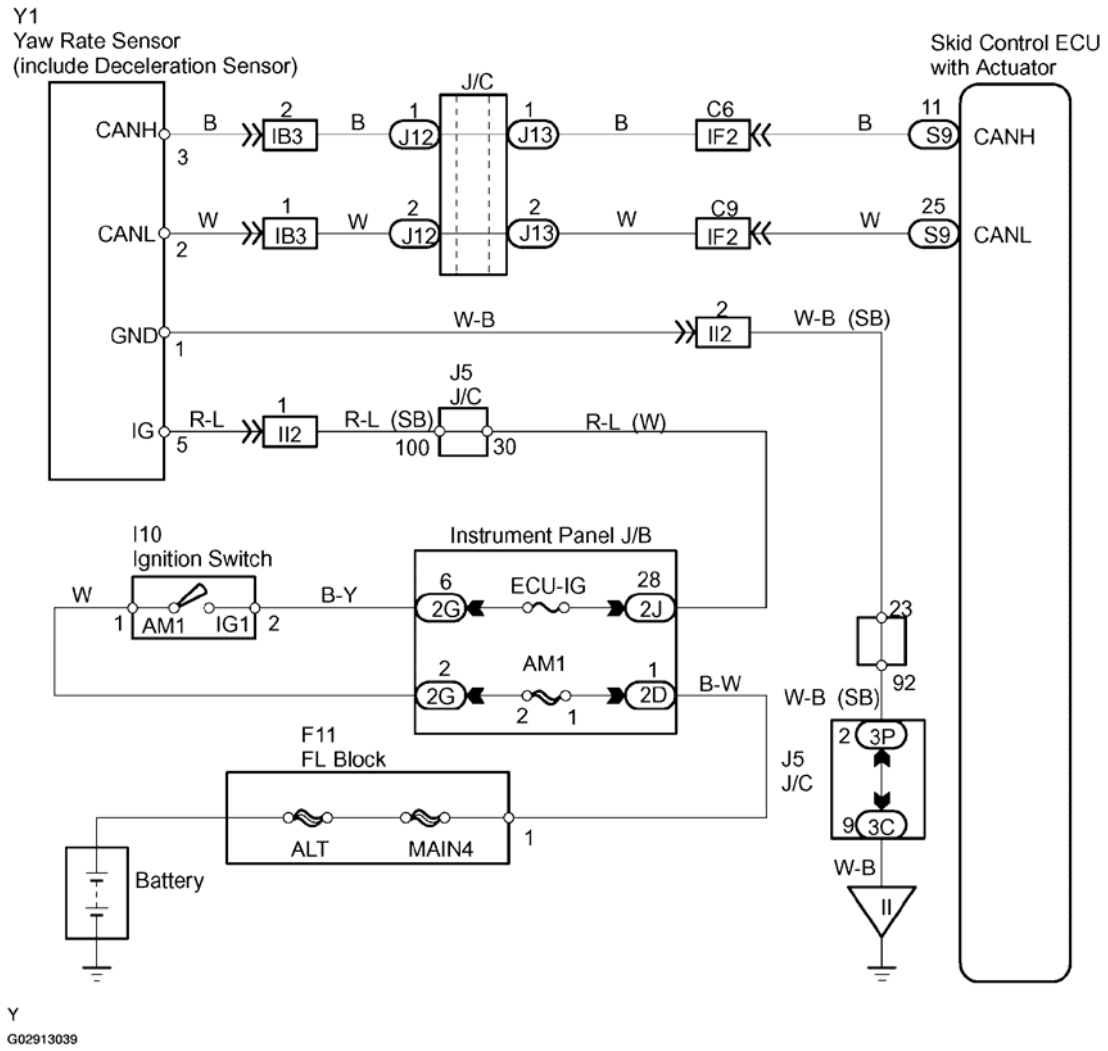

Fig. 72: Deceleration Sensor & Yaw Rate Sensor Wiring Diagram
Courtesy of TOYOTA MOTOR SALES, U.S.A., INC.

INSPECTION PROCEDURE

HINT:

When U0073/94, U0123/62, U0124/95 or U0126/63 are output accompanied with C1232/32, C1234/34, C1244/44, C1245/45, or C1381/97, inspect and repair the trouble areas indicated by U0073/94, U0123/62, U0124/95 or U0126/63 first.

1. **Measure voltage of IG power source.**

   PREPARATION:

   Disconnect the yaw rate sensor connector.

cardiagn.com

CHECK:

a. Turn the ignition switch ON.
b. Measure the voltage between terminal IG and GND of the yaw rate sensor connector.

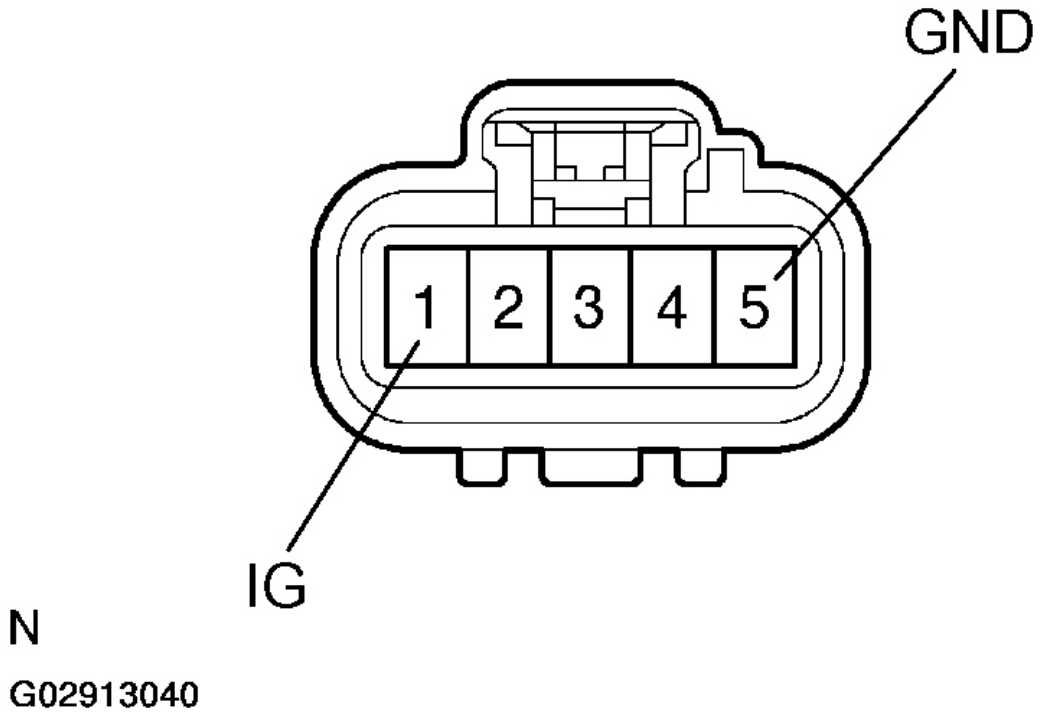

Fig. 73: Identifying Terminals IG & GND Of Yaw Rate Sensor Connector
Courtesy of TOYOTA MOTOR SALES, U.S.A., INC.

OK:

Voltage: 10 to 14 V

OK: Replace yaw rate sensor.

NOTE: When replacing the brake actuator assembly, perform the zero point calibration (see PRE-CHECK).

NG: Go to next step.

2. **Check for open or short circuit in harness and connector between yaw rate sensor and battery (See HOW TO USE THE DIAGNOSTIC CHART AND INSPECTION PROCEDURE).**

cardiagn.com

NG: Repair or replace harness and connector.

OK: Go to next step.

3. **Check resistance between terminal GND of yaw rate sensor connector and body ground.**

PREPARATION:

Disconnect the yaw rate sensor connector.

CHECK:

Measure the resistance between terminal GND of the yaw rate sensor harness side connector and body ground.

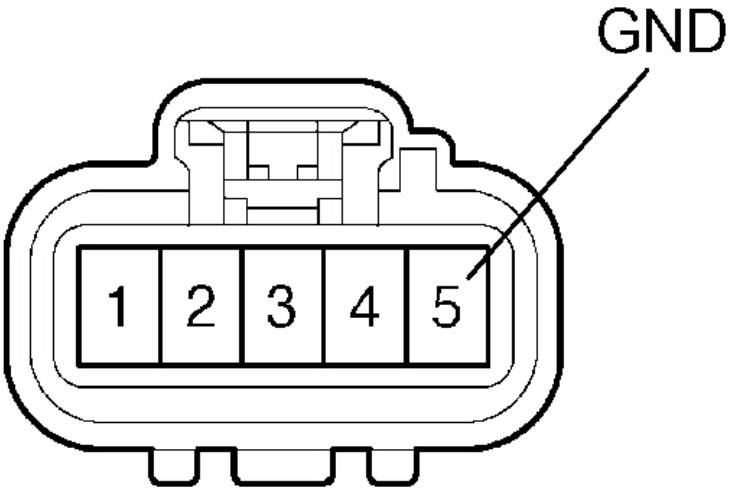

N

G02913041

Fig. 74: Identifying GND Terminal Of Yaw Rate Sensor
Courtesy of TOYOTA MOTOR SALES, U.S.A., INC.

OK:

Resistance: Below 1 ohm

cardiagn.com

NG: Repair or replace harness and connector.

OK: Replace yaw rate sensor.

NOTE: When replacing the brake actuator assembly, perform the zero point calibration (see PRE-CHECK).

DTC C1241/41: IG POWER SOURCE CIRCUIT

CIRCUIT DESCRIPTION

DTC No.	DTC Detection Condition	Trouble Area
C1241/41	• With vehicle speed at 3 km/h or more, IG1 voltage is 9.5 V or less for 10 seconds or more.	• Battery • Charging system • Power source circuit

G02913042

Fig. 75: DTC (C1241/41) Table
Courtesy of TOYOTA MOTOR SALES, U.S.A., INC.

WIRING DIAGRAM

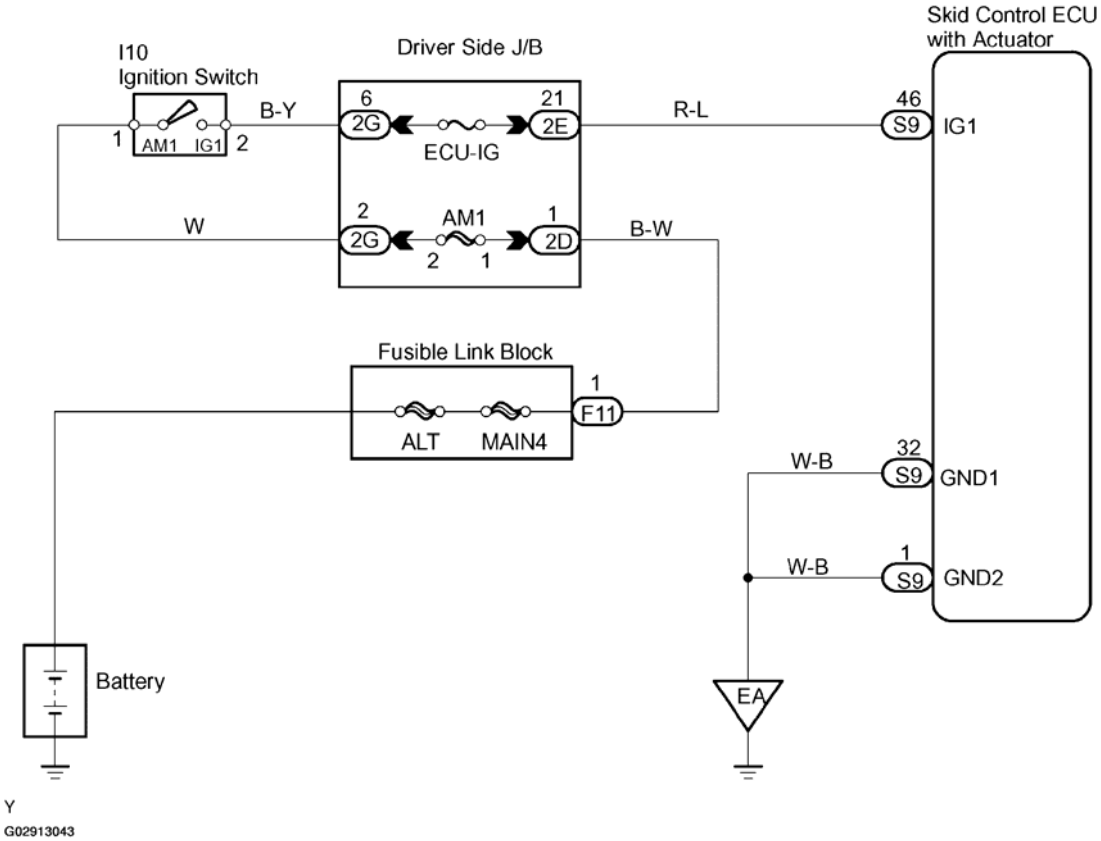

cardiagn.com

Fig. 76: IG Power Source Wiring Diagram
Courtesy of TOYOTA MOTOR SALES, U.S.A., INC.

INSPECTION PROCEDURE

1. **Check ECU-IG fuse.**

   PREPARATION:

   Remove the ECU-IG fuse from the driver side J/B.

cardiagn.com

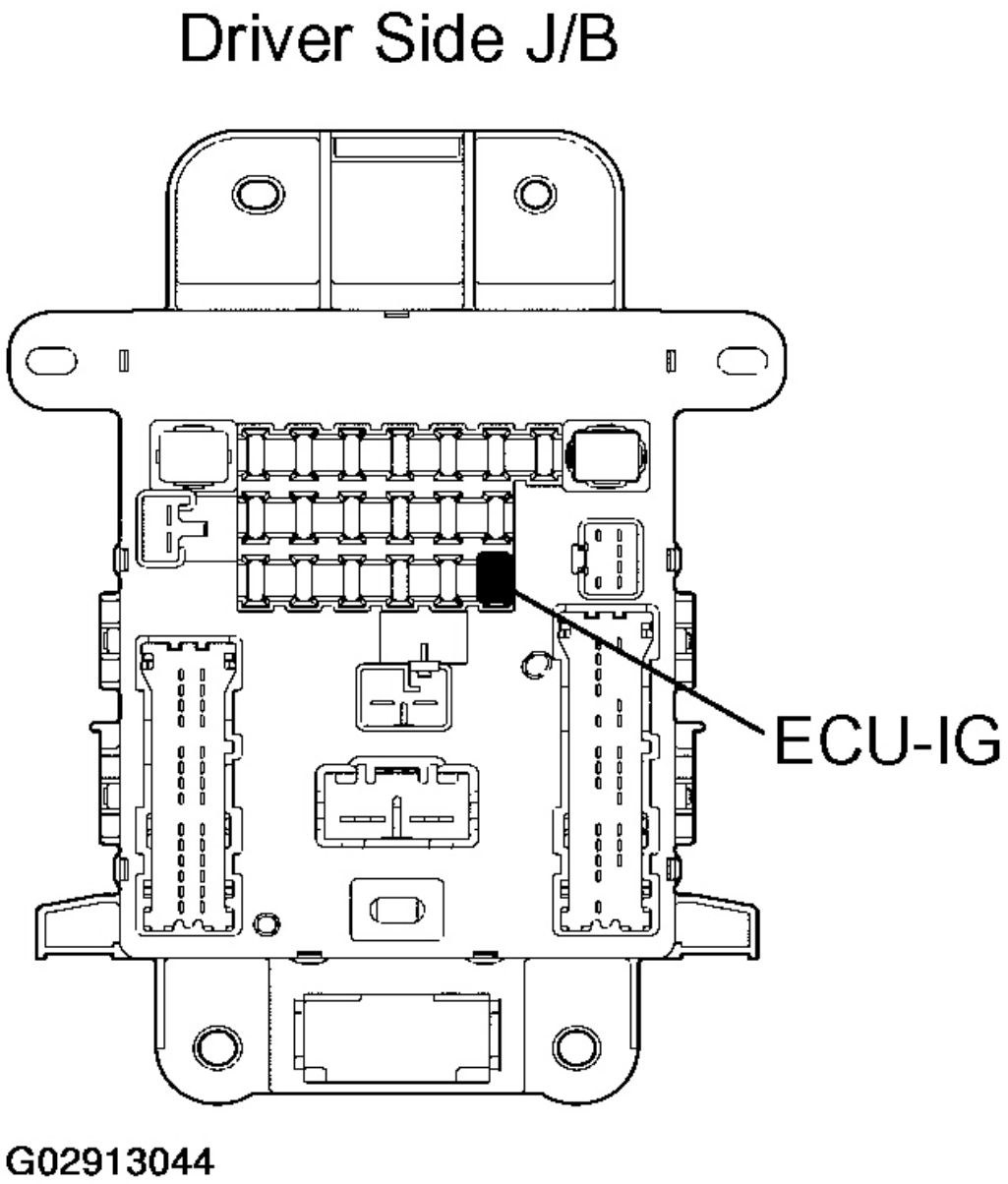

Fig. 77: Locating ECU-IG Fuse
Courtesy of TOYOTA MOTOR SALES, U.S.A., INC.

CHECK:

Measure the resistance.

cardiagn.com

OK:

Resistance: Below 1 ohm

NG: Replace fuse.
OK: Go to next step.

2. **Measure battery positive voltage.**

CHECK:

Check the battery positive voltage.

OK:

Voltage: 10 to 14 V

NG: Check and repair charging system.
OK: Go to next step.

3. **Measure voltage of ECU IG power source.**

When using the hand-held tester:

PREPARATION:

a. Connect the hand-held tester to the DLC3.
b. Turn the ignition switch ON and press the hand-held tester main switch ON.
c. Select the DATA LIST mode on the hand-held tester.

CHECK:

Measure the voltage condition output from the ECU displayed on the hand-held tester.

OK:

"Normal" is displayed.

When not using the hand-held tester:

PREPARATION:

Disconnect the brake actuator connector.

CHECK:

a. Turn the ignition switch ON.

cardiagn.com

b. Measure the voltage between terminal IG1 and GND1 of brake actuator harness side connector.

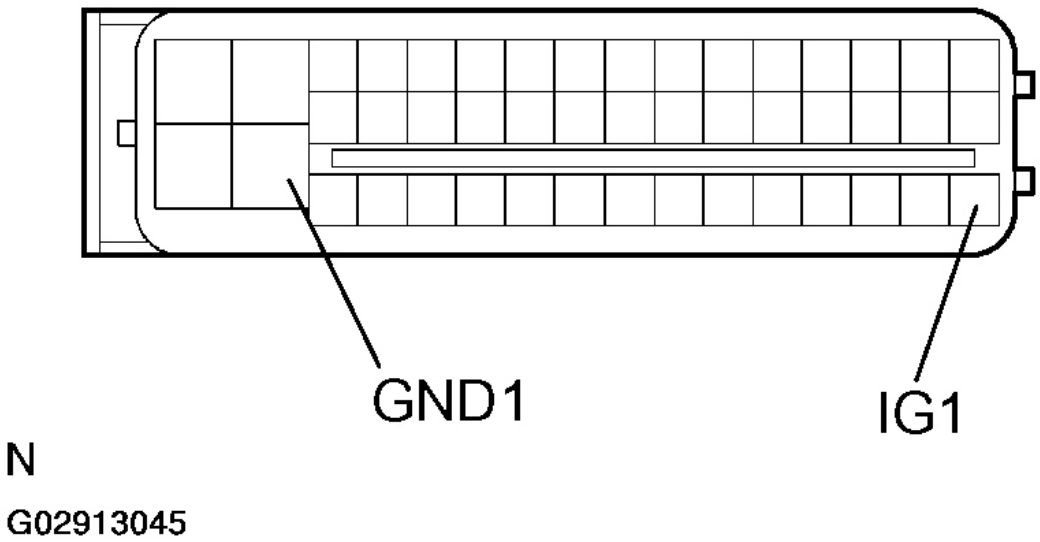

Fig. 78: Measuring Voltage Between Terminal IG1 & GND1 Of Brake Actuator Harness Side Connector
Courtesy of TOYOTA MOTOR SALES, U.S.A., INC.

OK:

Voltage: 10 to 14 V

OK: Replace brake actuator assembly.

NOTE: When replacing the brake actuator assembly, perform the zero point calibration (see PRE-CHECK).

NG: Go to next step.

4. **Measure resistance between terminal GND1 of skid control ECU connector and body ground.**

PREPARATION:

Disconnect the brake actuator connector.

CHECK:

Measure the resistance between terminal GND1 of the skid control ECU harness side connector and the

cardiagn.com

body ground.

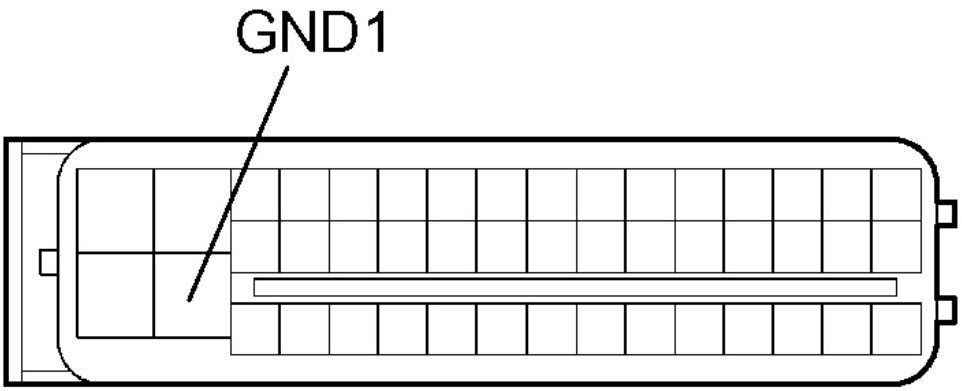

N

G02913046

Fig. 79: Measuring Resistance Between GND1 Of Skid Control ECU Harness Side Connector & Body Ground
Courtesy of TOYOTA MOTOR SALES, U.S.A., INC.

OK:

Resistance: Below 1 ohm

NG: Repair or replace harness and connector.

OK: Check for open circuit in harness and connector between skid control ECU and battery, skid control ECU and body ground (See HOW TO USE THE DIAGNOSTIC CHART AND INSPECTION PROCEDURE).

DTC C1246/46: MASTER CYLINDER PRESSURE SENSOR CIRCUIT

CIRCUIT DESCRIPTION

The master cylinder pressure sensor is connected to the skid control ECU in the actuator.

cardiagn.com

DTC No.	DTC Detection Condition	Trouble Area
C1246/46	• When vehicle speed is 7 km/h (4 mph) or more and ECU PMC terminal voltage exceeds 0.86 V, condition that voltage does not change 1 V or more continues for 30 seconds • Noise in ECU PMC terminal occurs 7 times or more within 5 seconds • When ECU STP terminal is OFF, condition that ECU PMC terminal voltage is 0.86 V or more, or less than 0.3 V continues for 5 seconds or more • When IG1 terminal voltage is 9.5 to 17.2 V, condition that ECU VCM terminal voltage is out of range from 4.4 to 5.6 V continues for 1.2 seconds or more • When ECU VCM terminal voltage is 4.4 to 5.6 V, condition that ECU PMC terminal voltage is out of range from 0.19 to 4.57 V continues for 1.2 seconds or more	• Master cylinder pressure sensor • Master cylinder pressure sensor circuit • Brake actuator assembly

G02913047

Fig. 80: DTC-C1246/46 Table
Courtesy of TOYOTA MOTOR SALES, U.S.A., INC.

INSPECTION PROCEDURE

HINT:

Start the inspection from step 1 when using the hand-held tester and start from step 2 when not using the hand-held tester.

1. **Check output value of master cylinder pressure sensor.**

   PREPARATION:

   a. Connect the hand-held tester to the DLC3.
   b. Turn the ignition switch ON and push the hand-held tester main switch ON.
   c. Select the DATA LIST mode on the hand-held tester.

   CHECK:

   Check that the brake fluid pressure value of the master cylinder pressure sensor observed in the hand-held tester changes when the brake pedal is depressed.

   OK:

   Brake fluid pressure value should change.

   OK: Replace brake actuator assembly.

   NOTE: When replacing the brake actuator assembly, perform the zero point calibration (see PRE-CHECK).

cardiagn.com

NG: Go to next step.

2. **Check whether or not ECU terminal STP input voltage changes when stop light switch comes on and off.**

   NO : Check stop light switch circuit (See PROBLEM SYMPTOMS TABLE).

   YES : If same code is still output after DTC is deleted, check contact condition of each connection. If connections are normal, ECU may be defective.

NOTE: **When replacing the brake actuator assembly, perform the zero point calibration (see PRE-CHECK).**

DTC C1249/49: STOP LIGHT SWITCH CIRCUIT

CIRCUIT DESCRIPTION

DTC No.	DTC Detection Condition	Trouble Area
C1249/49	• When IG1 terminal voltage is 9.5 to 17.2 V, open circuit of stop light switch continues for 0.3 seconds or more.	• Stop light bulb • Stop light switch circuit

G02913048

Fig. 81: DTC (C1249/49) Table
Courtesy of TOYOTA MOTOR SALES, U.S.A., INC.

WIRING DIAGRAM

cardiagn.com

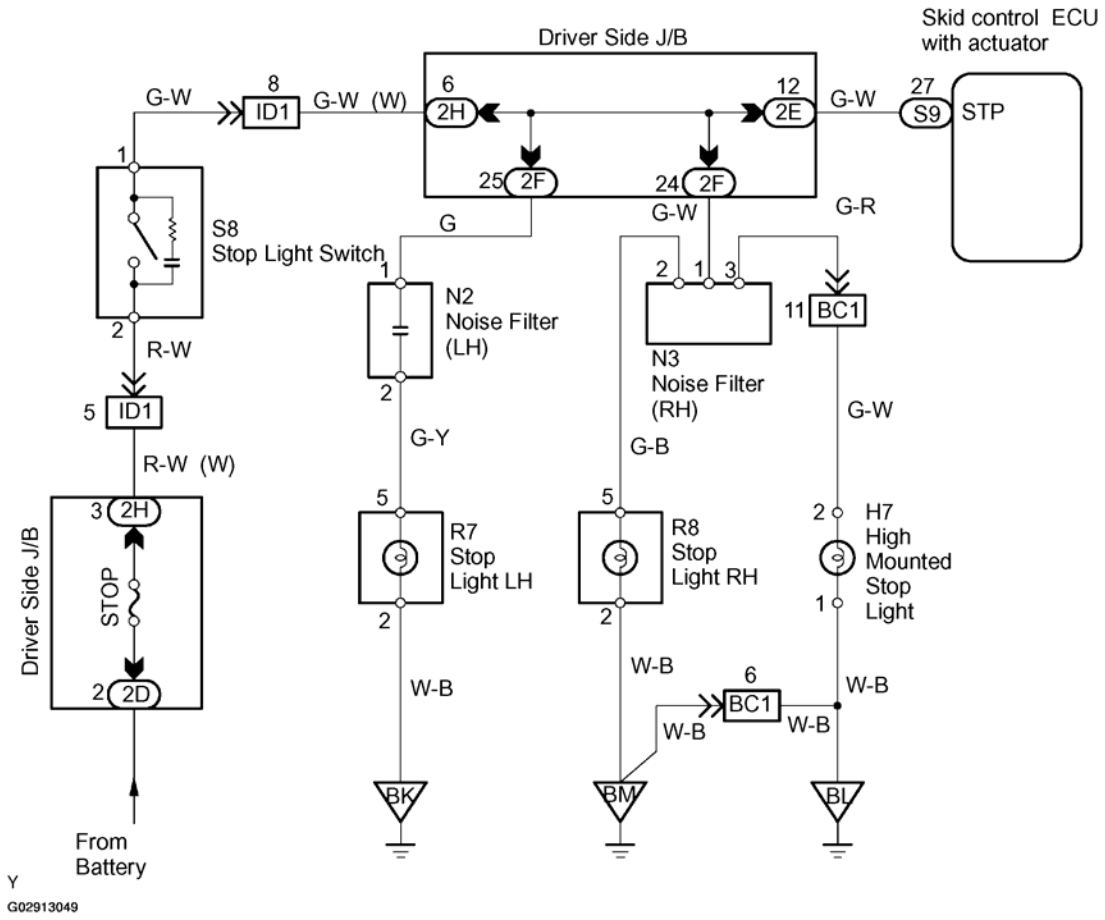

Fig. 82: Stop Light Circuit Diagram
Courtesy of TOYOTA MOTOR SALES, U.S.A., INC.

INSPECTION PROCEDURE

1. **Check operation of stop light switch.**

   CHECK:

   Check that the stop lights turn on when the brake pedal is depressed and turn off when the brake pedal is released.

   OK: Go to step 4 .
   NG: Go to next step.

2. **Measure voltage between terminal STP of skid control ECU and body ground.**

   PREPARATION:

   Disconnect the brake actuator connector.

cardiagn.com

CHECK:

Measure the voltage between terminal STP of the skid control ECU and body ground when the brake pedal is depressed.

OK:

Voltage: 8 to 14 V

CHECK:

Measure the voltage between terminal STP of the skid control ECU and body ground when the brake pedal is released.

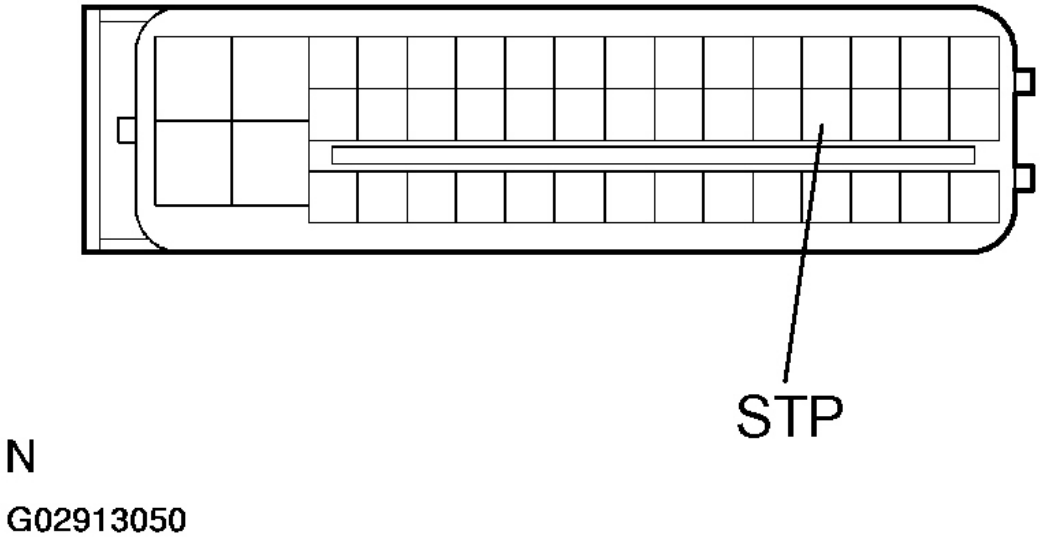

Fig. 83: Locating STP Terminal
Courtesy of TOYOTA MOTOR SALES, U.S.A., INC.

OK:

Voltage: Below 1 V

NG: Go to step 3
OK: If same code is still output after DTC is deleted, check contact condition of each connection. If connections are normal, ECU may be defective.

NOTE: When replacing the brake actuator assembly, perform the zero point

cardiagn.com

calibration (see PRE-CHECK).

3. **Check stop light circuit (See PROBLEM SYMPTOMS TABLE).**
   NG: Repair or replace stop light circuit.
   OK: Go to next step.
4. **Check for open circuit in harness and connector between skid control ECU and stop light switch (See HOW TO USE THE DIAGNOSTIC CHART AND INSPECTION PROCEDURE).**
   NG: Repair or replace harness and connector.
   OK: Replace brake actuator assembly.

NOTE: When replacing the brake actuator assembly, perform the zero point calibration (see PRE-CHECK).

DTC C1251/51: ABS PUMP MOTOR LOCK

CIRCUIT DESCRIPTION

DTC No.	DTC Detection Condition	Trouble Area
C1251/51	When either condition 1. or 2. is defected: 1. ABS pump motor is not operating normally. 2. Open circuit of ABS pump motor continues for 2 sec. or more.	• Brake actuator assembly • Brake actuator circuit

G02913051

Fig. 84: DTC - C1251/51 Table
Courtesy of TOYOTA MOTOR SALES, U.S.A., INC.

WIRING DIAGRAM

cardiagn.com

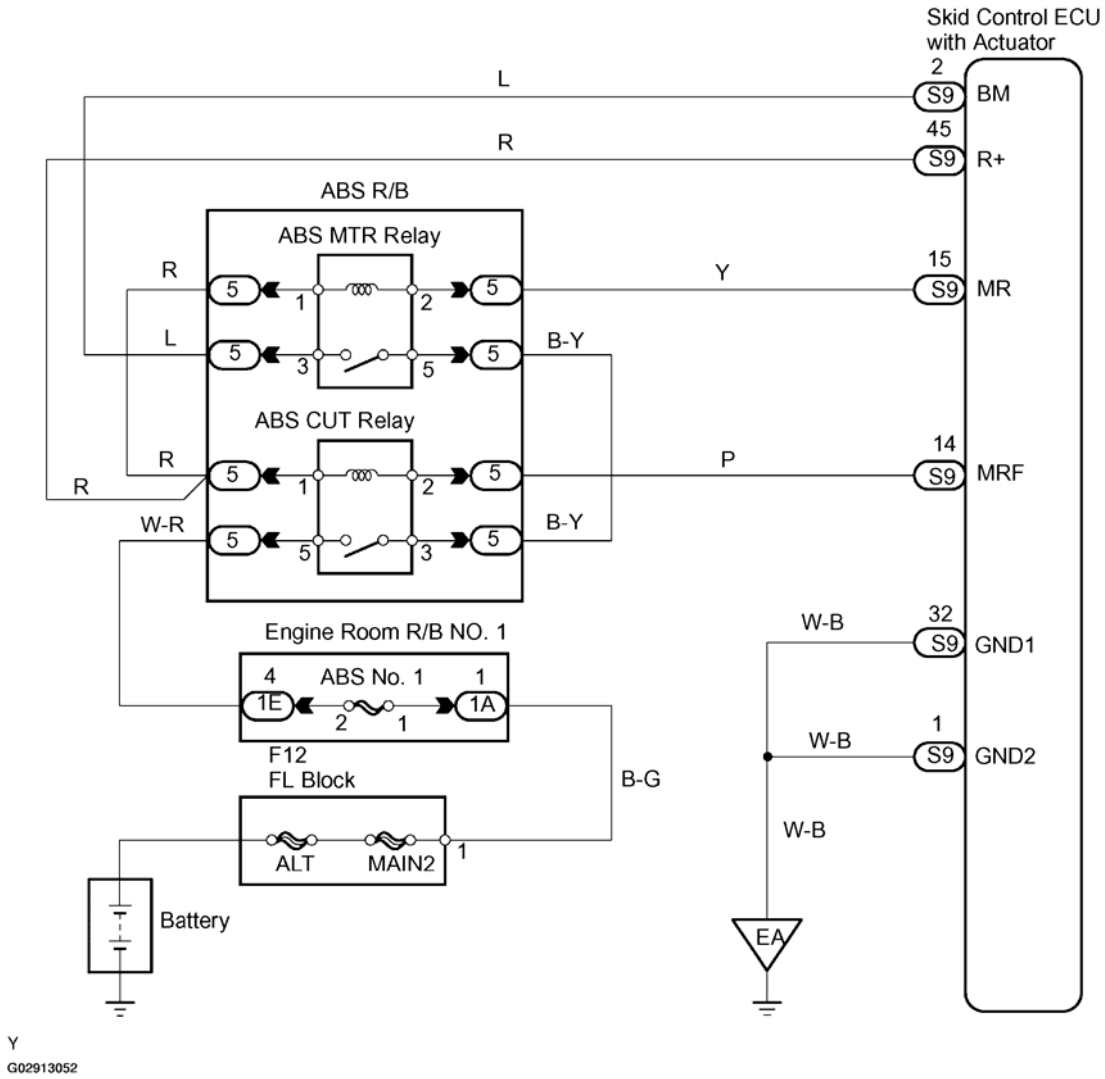

Fig. 85: ABS Pump Motor Lock Wiring Diagram
Courtesy of TOYOTA MOTOR SALES, U.S.A., INC.

INSPECTION PROCEDURE

HINT:

Start the inspection from step 1 when using the hand-held tester and start from step 2 when not using the hand-held tester.

1. **Check ABS motor operation.**

   PREPARATION:

   a. Connect the hand-held tester to the DLC3.

cardiagn.com

b. Turn the ignition switch ON and push the hand-held tester main switch ON.
c. Select the item "ABS MTR RELAY" in the ACTIVE TEST and operating it with the hand-held tester.

CHECK:

Check the operation sound of the ABS motor when operating it with the hand-held tester.

OK:

The operation sound of the ABS motor should be heard.

OK: Replace brake actuator assembly.

NOTE: When replacing the brake actuator assembly, perform the zero point calibration (see PRE-CHECK).

NG: Go to next step.

2. **Measure resistance between terminal GND2 of skid control ECU connector and body ground.**

PREPARATION:

Disconnect the brake actuator connector.

CHECK:

Measure the resistance between terminal GND2 of the skid control ECU harness side connector and body ground.

cardiagn.com

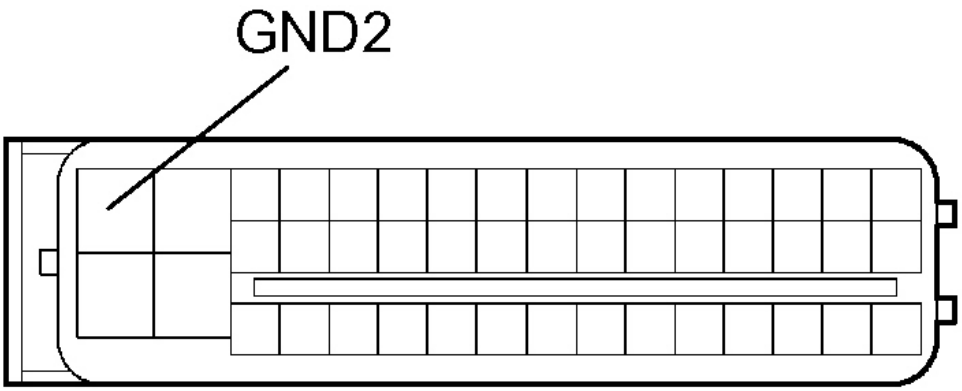

N

G02913053

Fig. 86: Identifying GND2 Terminal
Courtesy of TOYOTA MOTOR SALES, U.S.A., INC.

OK:

Resistance: Below 1 ohm

NG: Repair or replace harness and connector.
OK: Replace brake actuator assembly.

NOTE: When replacing the brake actuator assembly, perform the zero point calibration (see PRE-CHECK).

DTC C1337/37: TIRES OF DIFFERENT SIZE (ONLY FOR 2WD)

CIRCUIT DESCRIPTION

cardiagn.com

DTC No.	DTC Detection Condition	Trouble Area
C1337/37	Driving at more than 20 km/h (12 mph) for more than 20 seconds with 1 or 2 tires of different size 3 times continuously	• Tire size

G02913054

Fig. 87: DTC - (C1337/37) Table
Courtesy of TOYOTA MOTOR SALES, U.S.A., INC.

INSPECTION PROCEDURE

1. **Check tire size.**
   NG: Replace tires so that all 4 tires are same in size.
   OK: Go to next step.
2. **Check sensor rotor (See DTC C0200/31, C0205/32, C0210/33, C1235/35, C1236/36, C1238/38, C1239/39: SPEED SENSOR CIRCUIT).**
   NG: Replace speed sensor rotor.
   OK: Go to next step.
3. **Check speed sensor (See DTC C0200/31, C0205/32, C0210/33, C1235/35, C1236/36, C1238/38, C1239/39: SPEED SENSOR CIRCUIT).**
   NG: Replace speed sensor.
   OK: Go to next step.
4. **Check for open and short circuit in harness and connector between speed sensor and skid control ECU (See HOW TO USE THE DIAGNOSTIC CHART AND INSPECTION PROCEDURE).**
   NG: Repair or replace harness and connector.
   OK: Check and replace brake actuator assembly.

DIAGNOSTIC TROUBLE CODES ALWAYS ON* MALFUNCTION IN SKID CONTROL ECU

*: ABS warning light

CIRCUIT DESCRIPTION

DTC No.	DTC Detection Condition	Trouble Area
Always ON	Malfunction in ECU internal circuit.	• Battery • Charging system • Power source circuit • ABS warning light circuit • Brake actuator assembly

G02913055

Fig. 88: DTC Trouble Area Table
Courtesy of TOYOTA MOTOR SALES, U.S.A., INC.

cardiagn.com

HINT:

In some cases, the hand-held tester cannot be used when the ECU is abnormal.

WIRING DIAGRAM

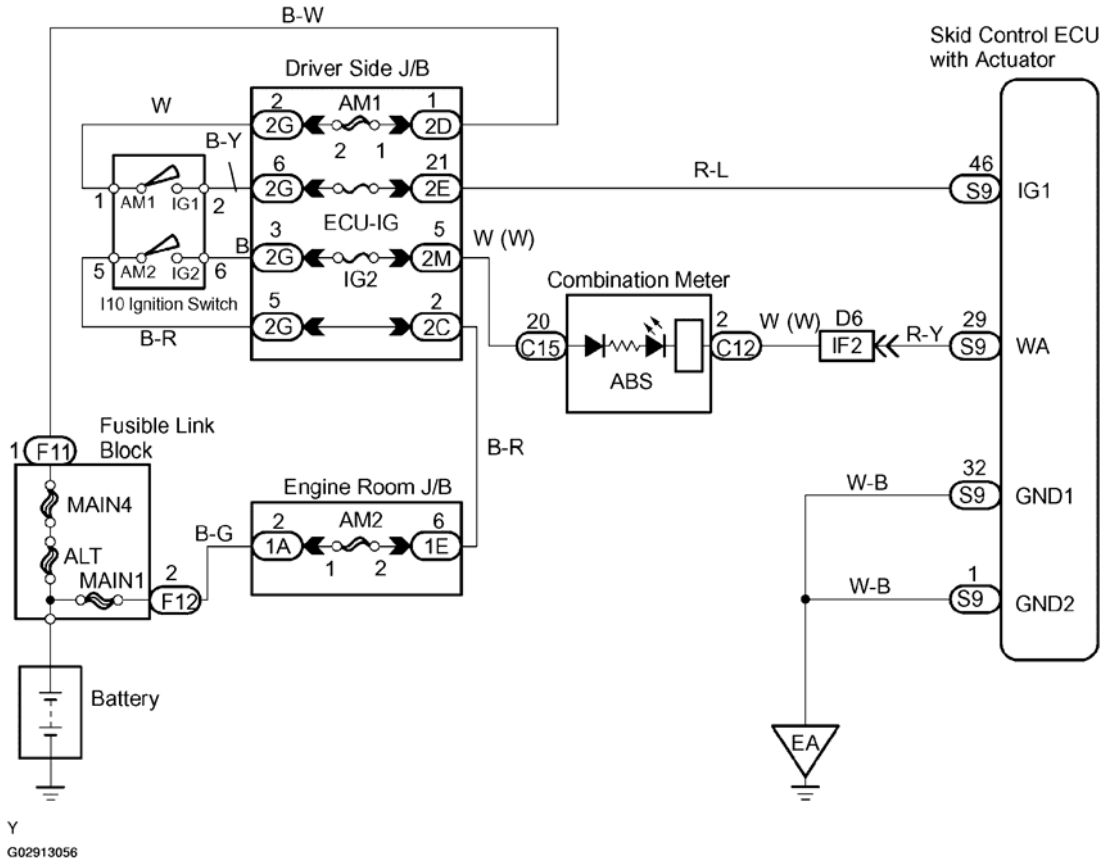

Fig. 89: Malfunction In Skid Control ECU Wiring Diagram
Courtesy of TOYOTA MOTOR SALES, U.S.A., INC.

INSPECTION PROCEDURE

1. **Is DTC output?**

   Check for DTC (see **PRE-CHECK**).

   YES : Repair circuit indicated by output code.
   NO : Go to next step.

2. **Check that skid control ECU connector are securely connected to skid control ECU.**
   NG: Connect connector to skid control ECU.
   OK: Go to next step.

cardiagn.com

3. **Measure voltage between terminals IG1 and GND1 of brake actuator connector.**

   PREPARATION:

   Disconnect the brake actuator connector.

   CHECK:

   a. Turn the ignition switch ON.
   b. Measure the voltage between terminal IG1 and GND1 of the skid control ECU harness side connector.

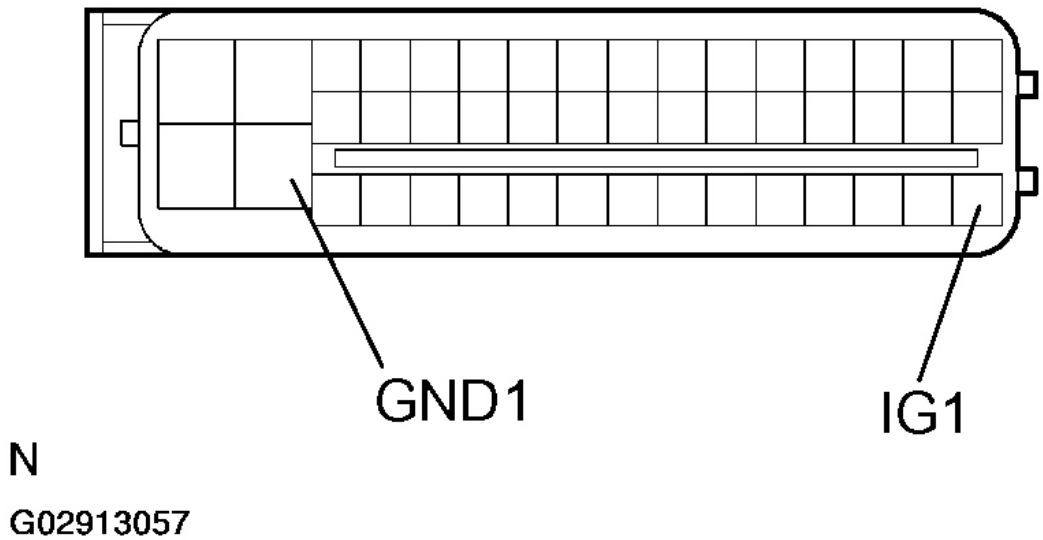

Fig. 90: Measuring Voltage Between Terminal IG1 & GND1 Of Skid Control ECU Harness Side Connector
Courtesy of TOYOTA MOTOR SALES, U.S.A., INC.

OK:

Voltage: 10 to 14 V

NG: Check for open and short circuit in harness and connector between ECU-IG fuse and skid control ECU (See HOW TO USE THE DIAGNOSTIC CHART AND INSPECTION PROCEDURE).

OK: Go to next step.

4. **Measure resistance between terminal GND1 of skid control ECU connector and body ground.**

cardiagn.com

PREPARATION:

Disconnect the brake actuator connector.

CHECK:

Measure the resistance between terminal GND1 of the skid control ECU harness side connector and body ground.

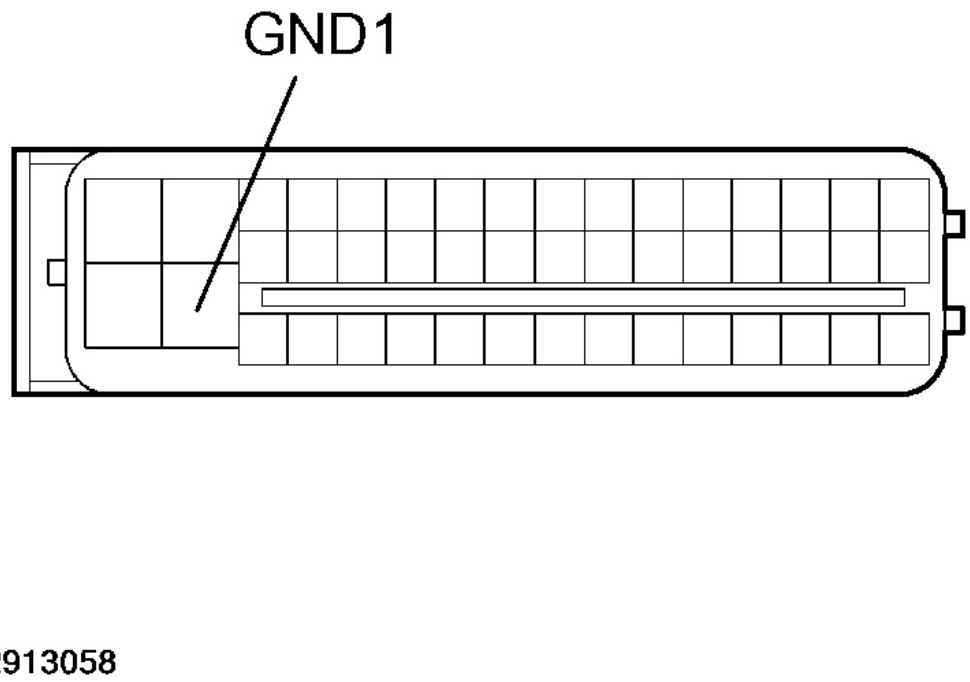

Fig. 91: Identifying GND1 Terminal
Courtesy of TOYOTA MOTOR SALES, U.S.A., INC.

OK:

Resistance: Below 1 ohm

NG: Repair or replace harness and connector.
OK: Go to next step.

5. **Measure battery positive voltage.**

CHECK:

cardiagn.com

Check the battery positive voltage.

Voltage: 10 to 14 V

NG: Check and repair charging system.
OK: Go to next step.

6. **Check operation of ABS warning light.**

PREPARATION:

Turn the ignition switch OFF.

Disconnect the connector from the brake actuator.

Ground terminal WA of the skid control ECU.

Turn the ignition switch ON.

CHECK:

Check that the ABS warning light turns off.

NG: Check and repair for ABS warning light circuit (See CIRCUIT).
OK: Go to next step.

7. **Check ABS warning light**

PREPARATION:

a. Reconnect the connector to the brake actuator.

CHECK:

Check that the ABS warning light turns off.

NG: Replace brake actuator assembly.

NOTE: When replacing the brake actuator assembly, perform the zero point calibration (see PRE-CHECK).

OK: END

DIAGNOSTIC TROUBLE CODES ALWAYS ON* MALFUNCTION IN SKID CONTROL ECU

*: VSC warning light

cardiagn.com

CIRCUIT DESCRIPTION

DTC No.	DTC Detection Condition	Trouble Area
Always ON	Malfunction in ECU internal circuit.	• Battery • Charging system • Power source circuit • VSC warning light circuit • Brake actuator assembly

G02913059

Fig. 92: DTC Trouble Area Chart
Courtesy of TOYOTA MOTOR SALES, U.S.A., INC.

HINT:

In some cases, the hand-held tester cannot be used when the ECU is abnormal.

WIRING DIAGRAM

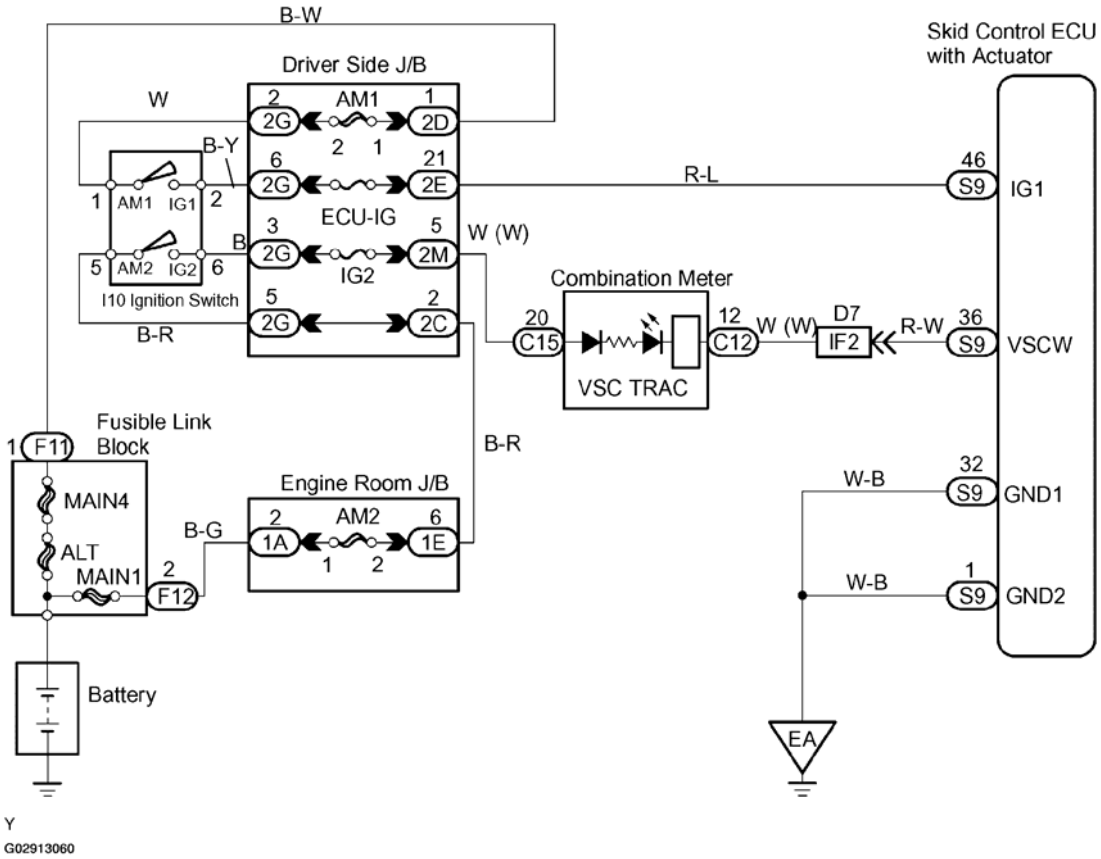

Fig. 93: Malfunction In Skid Control ECU Wiring Diagram
Courtesy of TOYOTA MOTOR SALES, U.S.A., INC.

cardiagn.com

INSPECTION PROCEDURE

1. **Is DTC output for VSC?**

   Check for DTC (see **PRE-CHECK**).

   YES : Repair circuit indicated by output code.
   NO : Go to next step.
2. **Check that skid control ECU connector are securely connected to skid control ECU.**
   NG: Connect connector to skid control ECU.
   OK: Go to next step.
3. **Measure voltage between terminals IG1 and GND1 of brake actuator connector.**

   PREPARATION:

   Disconnect the brake actuator connector.

   CHECK:

   a. Turn the ignition switch ON.
   b. Measure the voltage between terminals IG1 and GND1 of the skid control ECU harness side connector.

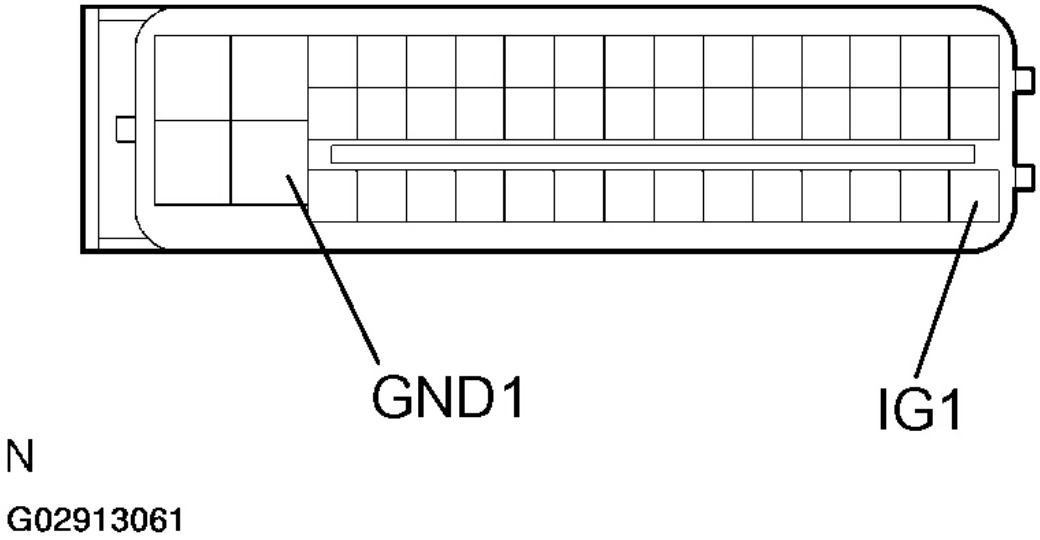

Fig. 94: Measuring Voltage Between Terminal IG1 & GND1 Of Skid Control ECU Harness Side Connector

cardiagn.com

Courtesy of TOYOTA MOTOR SALES, U.S.A., INC.

OK:

Voltage: 10 to 14 V

NG: Check for open and short circuit in harness and connector between ECU-IG fuse and skid control ECU (See HOW TO USE THE DIAGNOSTIC CHART AND INSPECTION PROCEDURE).

OK: Go to next step.

4. **Measure resistance between terminal GND1 of skid control ECU connector and body ground.**

PREPARATION:

Disconnect the brake actuator connector.

CHECK:

Measure the resistance between terminal GND1 of the skid control ECU harness side connector and body ground.

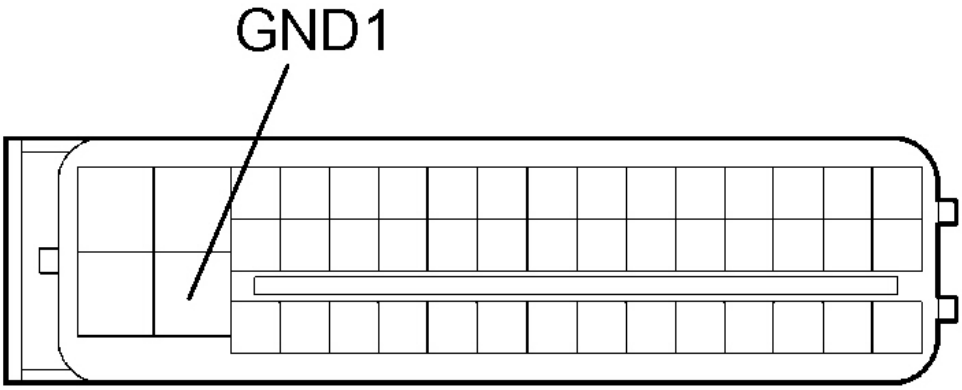

N

G02913062

Fig. 95: Identifying GND1 Terminal

cardiagn.com

Courtesy of TOYOTA MOTOR SALES, U.S.A., INC.

OK:

Resistance: Below 1 ohm

NG: Repair or replace harness and connector.
OK: Go to next step.

5. **Measure battery positive voltage.**

CHECK:

Check the battery positive voltage.

OK:

Voltage: 10 to 14 V

NG: Check and repair charging system.
OK: Go to next step.

6. **Check TC terminal circuit (see TC TERMINAL CIRCUIT).**

NG: Repair or replace harness and connector.
OK: Go to next step.

7. **Check operation of VSC warning light.**

PREPARATION:

a. Turn the ignition switch OFF.
b. Disconnect the connector from the brake actuator.
c. Turn the ignition switch ON.

CHECK:

Check that the VSC warning light turns off.

OK:

The VSC warning light turns off for 2 seconds after turning the ignition switch ON.

OK: Replace brake actuator assembly.

NOTE: When replacing the brake actuator assembly, perform the zero point calibration (see PRE-CHECK).

cardiagn.com

NG: Check and repair for VSC warning light circuit (See CIRCUIT).

ABS WARNING LIGHT CIRCUIT (DOES NOT LIGHT UP)

CIRCUIT DESCRIPTION

If the ECU detects trouble, it turns on the ABS warning light and prohibits ABS control. At this time, ECU stores a DTC in memory.

Connect terminals TC and CG of the DLC3 to make the ABS warning light blinks and the DTC is indicated.

WIRING DIAGRAM

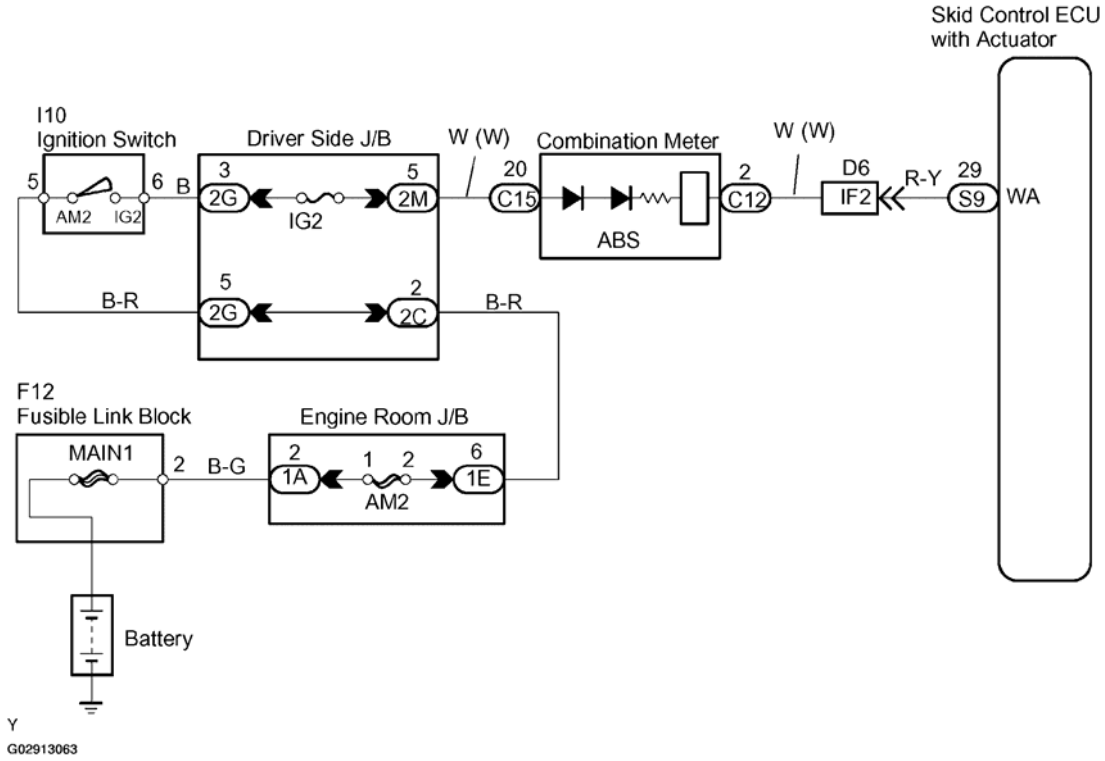

Fig. 96: ABS Warning Light Circuit Wiring Diagram
Courtesy of TOYOTA MOTOR SALES, U.S.A., INC.

INSPECTION PROCEDURE

HINT:

Start the inspection from step 1 when using the hand-held tester and start from step 2 when not using the hand-held tester.

1. **Check operation of ABS warning light.**

cardiagn.com

PREPARATION:

a. Connect the hand-held tester to the DLC3.
b. Turn the ignition switch ON and push the hand-held tester main switch ON.
c. Select the ACTIVE TEST mode on the hand-held tester.

CHECK:

Check that the ABS warning light can be turned ON and OFF on the combination meter using the hand-held tester.

OK:

The ABS warning light illuminates.

OK: Replace brake actuator assembly.

NOTE: When replacing the brake actuator assembly, perform the zero point calibration (see PRE-CHECK).

NG: Go to next step.

2. **Check ABS warning light.**

See the combination meter troubleshooting in **INSPECTION** .

NG: Repair bulb or combination meter assembly (See CIRCUIT).

OK: Go to next step.

3. **Check for open and short circuit in harness and connector between skid control ECU and ABS warning light (See HOW TO USE THE DIAGNOSTIC CHART AND INSPECTION PROCEDURE).**

NG: Repair or replace harness and connector.

OK: Replace brake actuator assembly.

NOTE: When replacing the brake actuator assembly, perform the zero point calibration (see PRE-CHECK).

VSC WARNING LIGHT CIRCUIT (DOES NOT LIGHT UP)

CIRCUIT DESCRIPTION

If the ECU stores DTC to shut down VSC & TRAC operation, the VSC warning light turns on the combination meter.

WIRING DIAGRAM

cardiagn.com

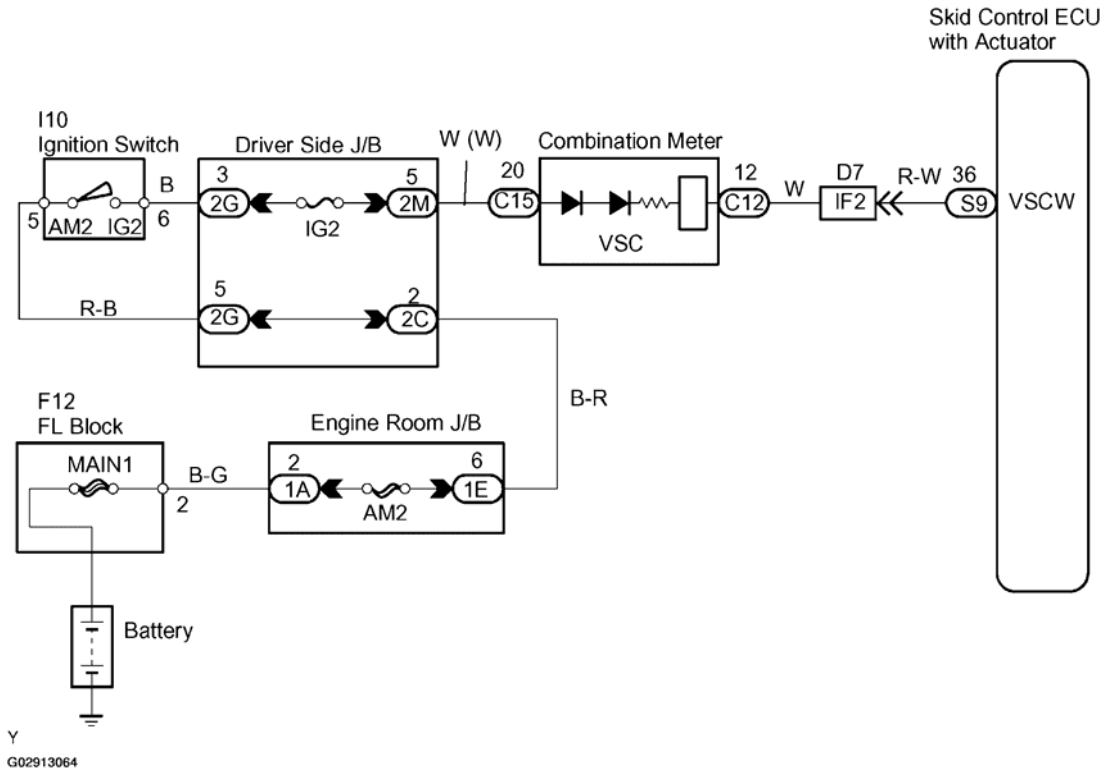

Fig. 97: VSC Warning Light Circuit Wiring Diagram
Courtesy of TOYOTA MOTOR SALES, U.S.A., INC.

INSPECTION PROCEDURE

HINT:

Start the inspection from step 1 when using the hand-held tester and start from step 2 when not using the hand-held tester.

1. **Check operation of the VSC warning light.**

   PREPARATION:

   a. Connect the hand-held tester to the DLC3.
   b. Turn the ignition switch ON and push the hand-held tester main switch ON.
   c. Select the ACTIVE TEST mode on the hand-held tester.

   CHECK:

   Check that the VSC warning light can be turned ON and OFF on the combination meter using the hand-held tester.

cardiagn.com

OK:

VSC WARNING LIGHT DIAGNOSTIC

Item	Test Details	Diagnostic Note
VSC/ TRAC OFF IND	Turns VSC / TRAC OFF indicator ON / OFF	Observe combination meter

OK: Replace brake actuator assembly.

NOTE: When replacing the brake actuator assembly, perform the zero point calibration (see PRE-CHECK).

NG: Go to next step.

2. **Check VSC warning light.**

   See the combination meter troubleshooting in **INSPECTION** .

   NG: Repair bulb or combination meter assembly (See CIRCUIT).

   OK: Go to next step.

3. **Check for open and short circuit in harness and connector between skid control ECU and VSC warning light (See HOW TO USE THE DIAGNOSTIC CHART AND INSPECTION PROCEDURE).**

   NG: Repair or replace harness and connector.

   OK: Replace brake actuator assembly.

   NOTE: When replacing the brake actuator assembly, perform the zero point calibration (see PRE-CHECK).

BRAKE WARNING LIGHT CIRCUIT

CIRCUIT DESCRIPTION

The brake warning light turns on when the brake fluid is insufficient, the parking brake is applied or the EBD is defective.

WIRING DIAGRAM

cardiagn.com

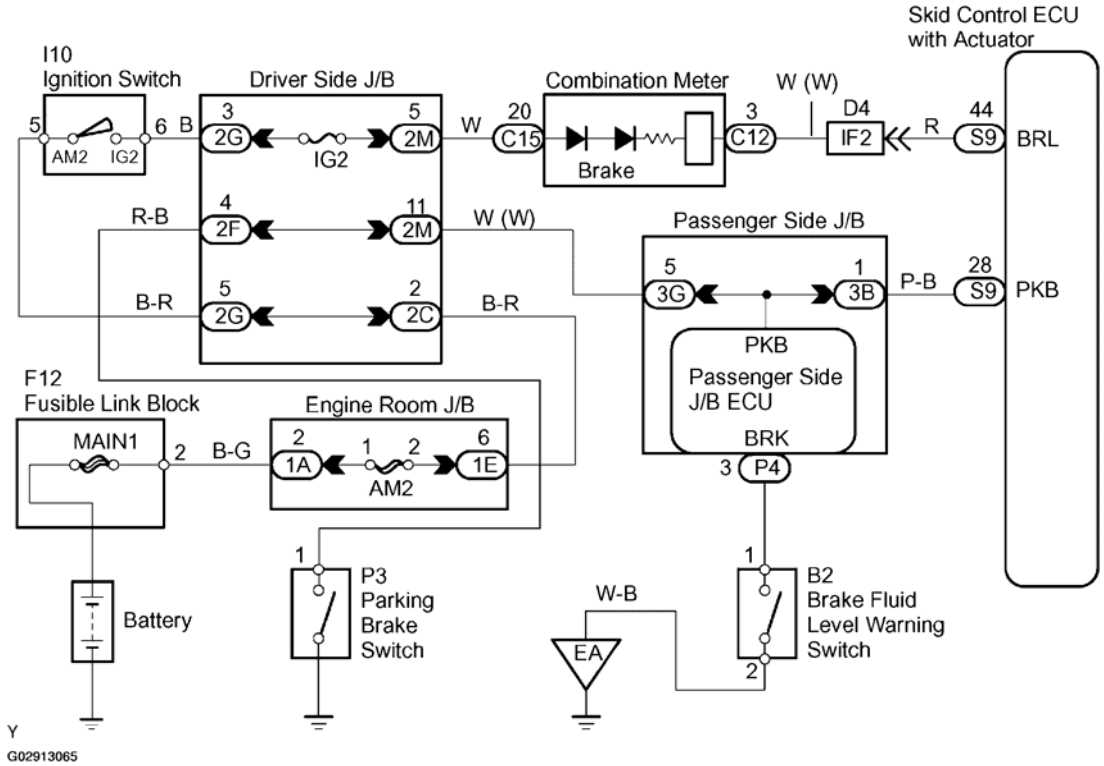

Fig. 98: Brake Warning Light Wiring Diagram
Courtesy of TOYOTA MOTOR SALES, U.S.A., INC.

INSPECTION PROCEDURE

1. **Check parking brake switch circuit (see PROBLEM SYMPTOMS TABLE).**
   NG: Repair or replace parking brake switch circuit.
   OK: Go to next step.
2. **Check brake fluid level warning switch circuit (see PROBLEM SYMPTOMS TABLE).**
   NG: Repair or replace brake fluid level warning switch circuit.
   OK: Go to next step.
3. **Is DTC output?**

   Check for DTCs (see **PRE-CHECK**).

   YES : Repair circuit indicated by output code.
   NO : Go to next step.
4. **Check BRAKE warning light.**

   See the combination meter inspection in **INSPECTION** .

   NG: Repair or replace combination meter.

cardiagn.com

OK: Replace brake actuator assembly.

NOTE: When replacing the brake actuator assembly, perform the zero point calibration (see PRE-CHECK).

SLIP INDICATOR LIGHT CIRCUIT

CIRCUIT DESCRIPTION

The Slip indicator light blinks during VSC & TRAC operation.

WIRING DIAGRAM

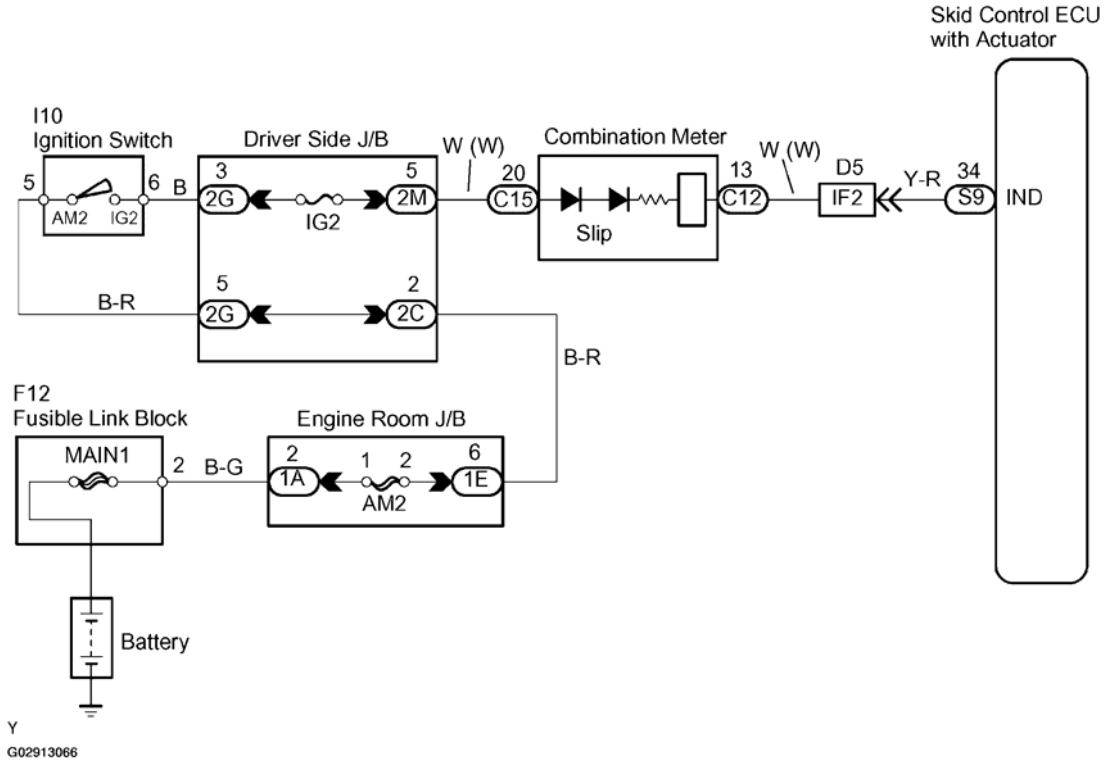

Fig. 99: Slip Indicator Light Wiring Diagram
Courtesy of TOYOTA MOTOR SALES, U.S.A., INC.

INSPECTION PROCEDURE

HINT:

Start the inspection from step 1 when using the hand-held tester and start from step 2 when not using the hand-held tester.

cardiagn.com

1. **Check operation of slip indicator light.**

   PREPARATION:

   a. Connect the hand-held tester to the DLC3.
   b. Turn the ignition switch ON and push the hand-held tester main switch ON.
   c. Select the ACTIVE TEST mode on the hand-held tester.

   CHECK:

   Check that the slip indicator light can be turned ON and OFF on the combination meter using the hand-held tester.

   OK:

   The slip indicator light illuminates.

   NG: Go to step 4 .

   OK: Go to next step.

2. **Check that slip indicator light is ON for 3 seconds immediately after ignition switch is turned ON.**

   OK: Proceed to next circuit inspection shown on problem symptoms table (see PROBLEM SYMPTOMS TABLE).

   NG: Go to next step.

3. **Check slip indicator light.**

   See the combination meter troubleshooting in **INSPECTION** .

   NG: Repair or replace combination meter.

   OK: Go to next step.

4. **Check for open and short circuit in harness and connector between skid control ECU and slip indicator light (See HOW TO USE THE DIAGNOSTIC CHART AND INSPECTION PROCEDURE).**

   NG: Repair or replace harness and connector.

   OK: Replace brake actuator assembly.

   NOTE: When replacing the brake actuator assembly, perform the zero point calibration (see PRE-CHECK).

TRAC OFF INDICATOR LIGHT, TRAC OFF SWITCH CIRCUIT

CIRCUIT DESCRIPTION

This is the TRAC control main switch. When the TRAC OFF switch is pushed on, TRAC control turns off and

cardiagn.com

the TRAC OFF indicator turns on. Turn the ignition switch OFF, and check that TRAC control turns on when turning the ignition switch ON again.

WIRING DIAGRAM

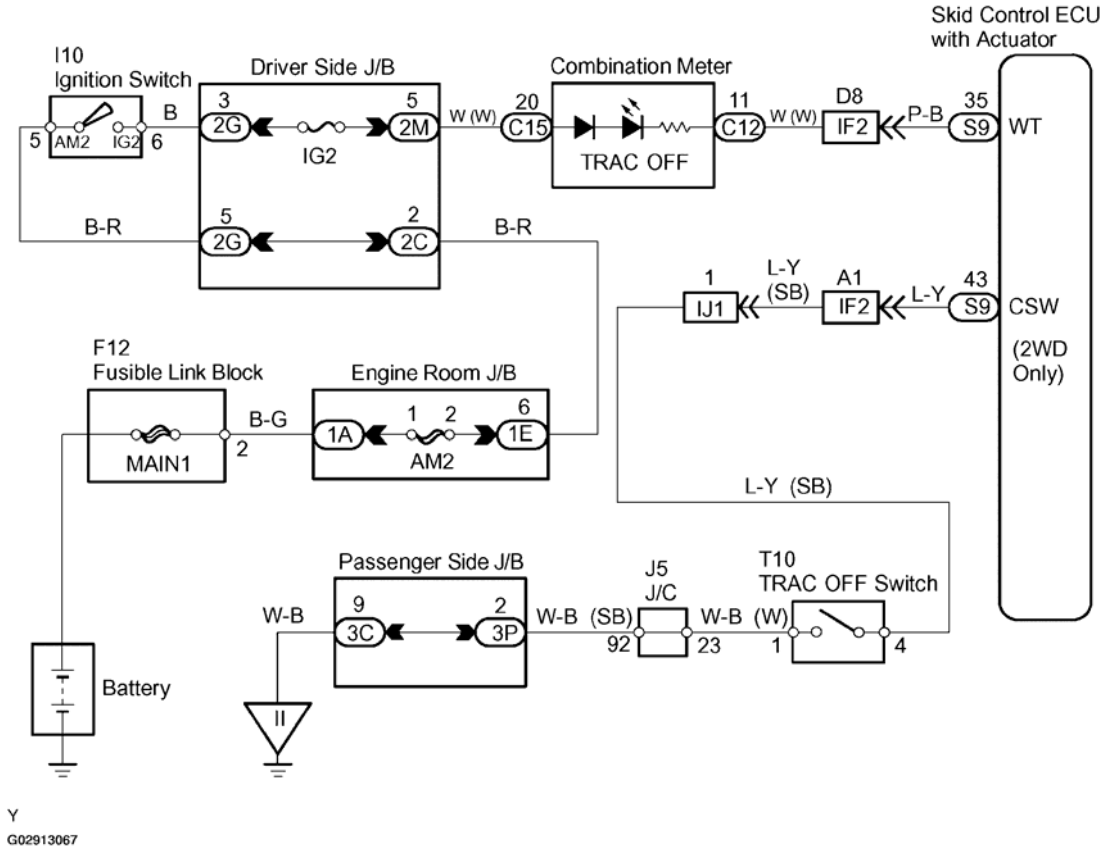

Fig. 100: TRAC OFF Indicator Light, TRAC OFF Switch Circuit Wiring Diagram
Courtesy of TOYOTA MOTOR SALES, U.S.A., INC.

INSPECTION PROCEDURE

HINT:

Start the inspection from step 1 when using the hand-held tester and start from step 2 when not using the hand-held tester.

1. **Check operation of TRAC OFF indicator light.**

   PREPARATION:

   a. Connect the hand-held tester to the DLC3.
   b. Turn the ignition switch ON and press the hand-held tester main switch ON.

cardiagn.com

c. Select the ACTIVE TEST mode on the hand-held tester.

CHECK:

Check that the TRAC OFF indicator light can be turned ON and OFF on the combination meter using the hand-held tester.

OK:

TRAC OFF INDICATOR LIGHT DIAGNOSTIC

Item	Measurement Item / Range (Display)	Diagnostics Note
TRAC OFF IND	Turns TRAC indicator ON/OFF	Observe combination meter

NG: Go to step 4 .

OK: Go to next step.

2. **Check TRAC OFF switch.**

PREPARATION:

Remove the TRAC OFF switch.

CHECK:

Measure the resistance between terminals 2 and 5 of the TRAC OFF switch when the TRAC OFF switch is ON and OFF.

cardiagn.com

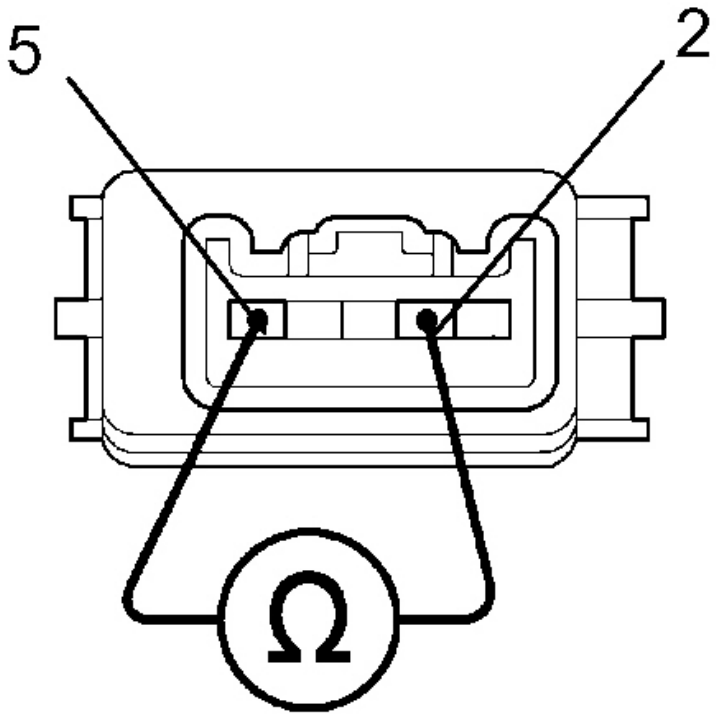

N

G02913068

Fig. 101: Measuring Resistance Between Terminals 2 & 5 Of TRAC Off Switch When TRAC Off Switch Is On & Off
Courtesy of TOYOTA MOTOR SALES, U.S.A., INC.

OK:

TRAC OFF SWITCH RESISTANCE

TRAC OFF Switch	Resistance
ON	Below 1 ohm
OFF	1 Mohm or higher

NG: Replace TRAC OFF switch.

OK: Go to next step.

3. **Check for open and short circuit in harness and connector between terminal CSW of skid control**

cardiagn.com

ECU and TRAC OFF switch and body ground (See HOW TO USE THE DIAGNOSTIC CHART AND INSPECTION PROCEDURE).

NG: Repair or replace harness and connector.

OK: Go to next step.

4. **Check TRAC OFF indicator light.**

   See the combination meter troubleshooting in **INSPECTION** .

   NG: Repair or replace combination meter.

   OK: Go to next step.

5. **Check for open and short circuit in harness and connector between terminal WT of skid control ECU and TRAC OFF indicator light (See HOW TO USE THE DIAGNOSTIC CHART AND INSPECTION PROCEDURE).**

   NG: Repair or replace harness and connector.

   OK: Replace brake actuator assembly.

NOTE: **When replacing the brake actuator assembly, perform the zero point calibration (see PRE-CHECK).**

VSC WARNING BUZZER CIRCUIT

CIRCUIT DESCRIPTION

The VSC warning buzzer sounds during VSC operation.

WIRING DIAGRAM

cardiagn.com

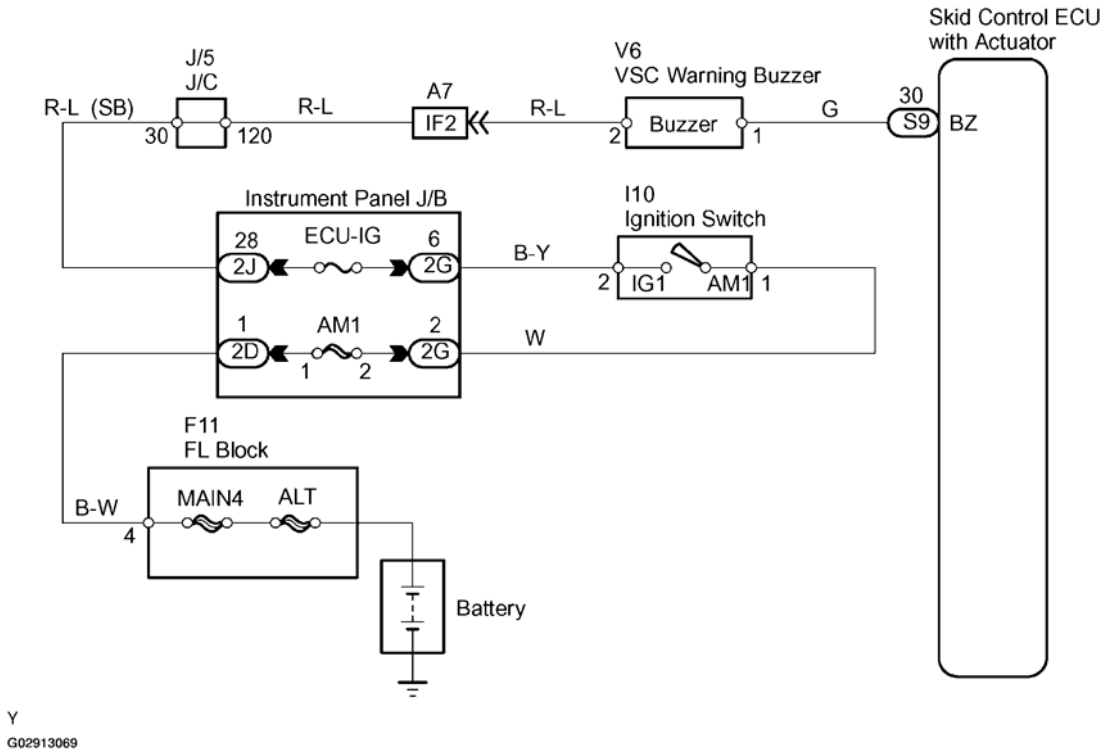

Fig. 102: VSC Warning Buzzer Circuit Wiring Diagram
Courtesy of TOYOTA MOTOR SALES, U.S.A., INC.

INSPECTION PROCEDURE

HINT:

Start the inspection from step 1 when using the hand-held tester and start from step 2 when not using the hand-held tester.

1. **Check operation of VSC warning buzzer.**

   PREPARATION:

   a. Connect the hand-held tester to the DLC3.
   b. Turn the ignition switch ON and push the hand-held tester main switch ON.
   c. Select the ACTIVE TEST mode on the hand-held tester.

   CHECK:

   Check "ON-OFF" function of the VSC warning buzzer using the hand-held tester.

   OK:

cardiagn.com

The VSC warning buzzer operates according to the tester instruction.

OK: Replace brake actuator assembly.

NOTE: When replacing the brake actuator assembly, perform the zero point calibration (see PRE-CHECK).

NG: Go to next step.

2. **Measure voltage between terminal 2 of VSC warning buzzer and body ground.**

PREPARATION:

Remove the VSC warning buzzer with the connectors being connected.

CHECK:

a. Turn the ignition switch ON.
b. Measure the voltage between terminal 2 of the VSC warning buzzer and the body ground.

OK:

Voltage: 10 to 14 V

NG: Repair or replace harness and connector from voltage supply to VSC warning buzzer.
OK: Go to next step.

3. **Check VSC warning buzzer.**

PREPARATION:

Disconnect the VSC warning buzzer connector.

CHECK:

Apply battery positive voltage to terminals 1 and 2 of the VSC buzzer connector and check that the VSC warning buzzer sounds.

cardiagn.com

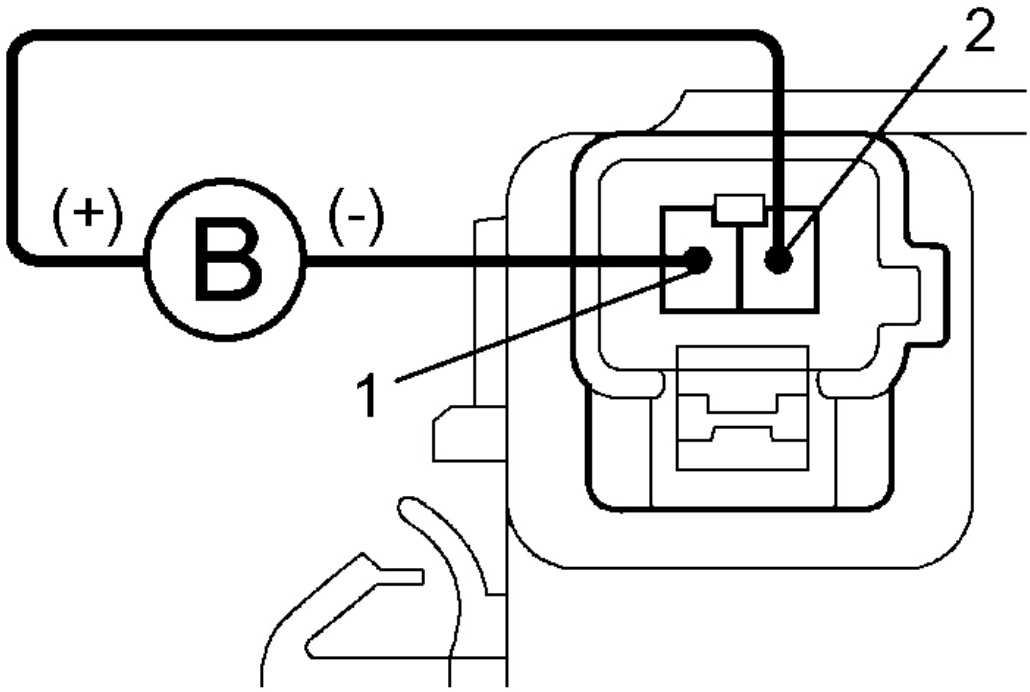

G02913070

Fig. 103: Checking VSC Warning Buzzer Sound
Courtesy of TOYOTA MOTOR SALES, U.S.A., INC.

NG: Replace VSC warning buzzer.

OK: Go to next step.

4. **Check for open and short circuit in harness and connector between skid control ECU and VSC warning buzzer (See HOW TO USE THE DIAGNOSTIC CHART AND INSPECTION PROCEDURE).**

NG: Repair or replace harness and connector.

OK: Replace brake actuator assembly.

NOTE: When replacing the brake actuator assembly, perform the zero point calibration (see PRE-CHECK).

TC TERMINAL CIRCUIT

CIRCUIT DESCRIPTION

Connecting terminals TC and CG of the DLC3 causes the ECU to indicate the DTC by blinking the ABS

cardiagn.com

warning light, VSC warning light and Brake warning light.

TC signal is sent to the skid control ECU from the ECM.

WIRING DIAGRAM

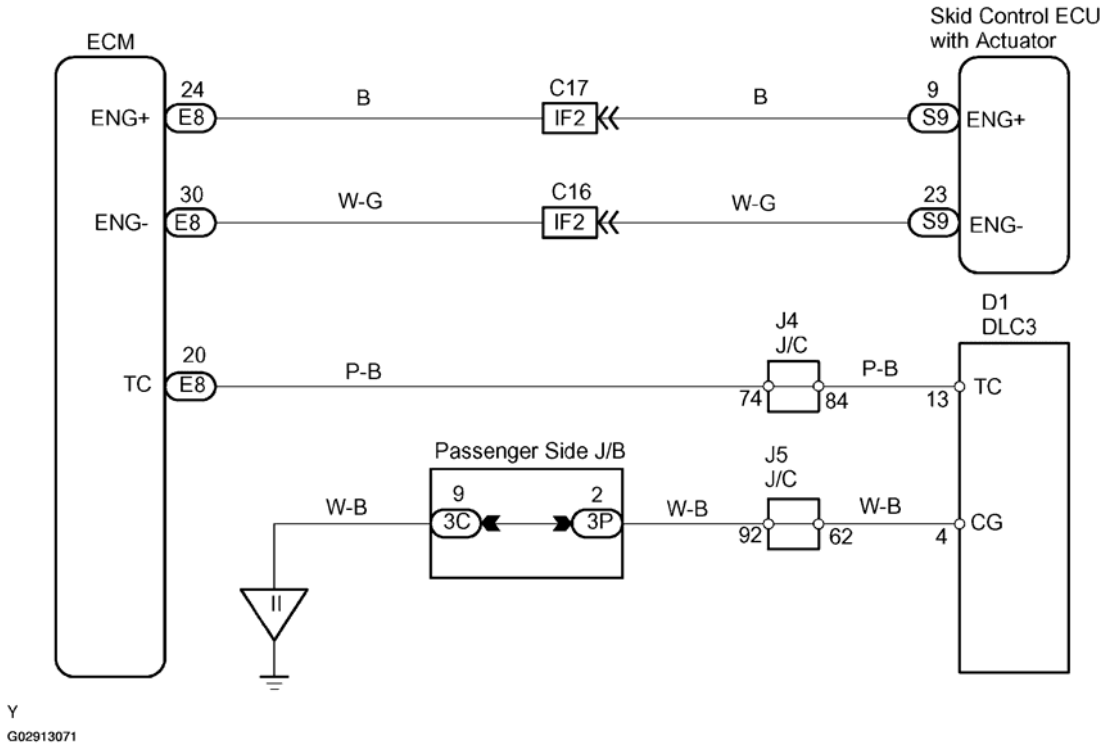

Fig. 104: TC Terminal Circuit Wiring Diagram
Courtesy of TOYOTA MOTOR SALES, U.S.A., INC.

INSPECTION PROCEDURE

1. **Measure voltage between terminals TC and CG of DLC3.**

   PREPARATION:

   Turn the ignition switch ON.

   CHECK:

   Measure the voltage between terminals TC and CG of the DLC3.

cardiagn.com

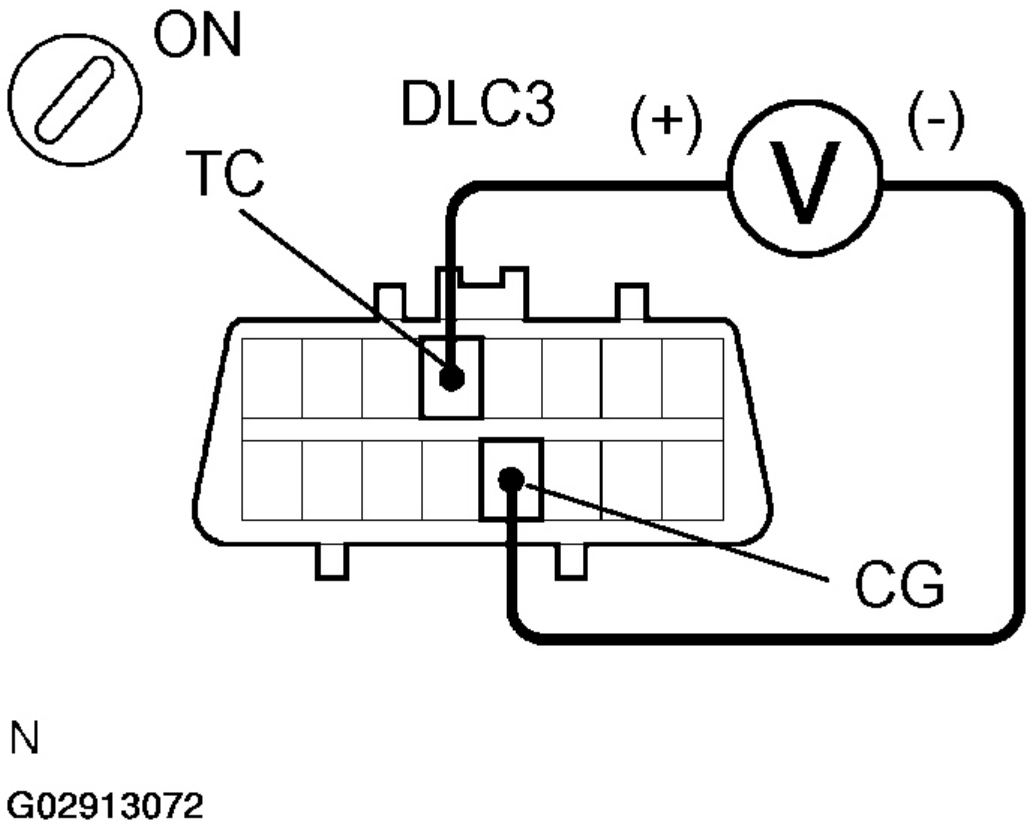

Fig. 105: Measuring Voltage Between Terminals TC & CG Of DLC3
Courtesy of TOYOTA MOTOR SALES, U.S.A., INC.

OK:

Voltage: 10 to 14 V

NG: Go to step 4 .

OK: Go to next step.

2. **With ignition switch OFF, check for open and short circuit in harness and connector between ECM and DLC3, and DLC3 and body ground (See HOW TO USE THE DIAGNOSTIC CHART AND INSPECTION PROCEDURE).**

   NG: Repair or replace harness and connector.

   OK: Go to next step.

3. **Check for open and short circuit in harness and connector between skid control ECU and ECM (See HOW TO USE THE DIAGNOSTIC CHART AND INSPECTION PROCEDURE).**

cardiagn.com

NG: Repair or replace harness and connector.

OK: Replace brake actuator assembly.

NOTE: When replacing the brake actuator assembly, perform the zero point calibration (see PRE-CHECK).

4. **Check for open and short circuit in harness and connector between terminals TC of the DLC3 and ECM (See HOW TO USE THE DIAGNOSTIC CHART AND INSPECTION PROCEDURE).**

   NG: Repair or replace harness and connector.

   OK: Replace ECM.

TS TERMINAL CIRCUIT

CIRCUIT DESCRIPTION

The sensor check circuit detects abnormalities in the speed sensor signal which cannot be detected with the DTC check. Connecting terminals TS and CG of the DLC3 starts the check.

WIRING DIAGRAM

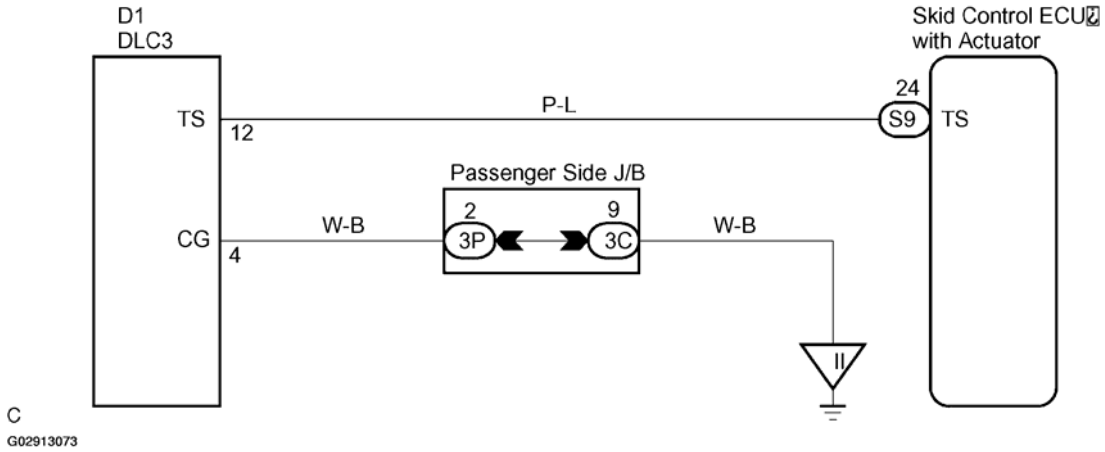

Fig. 106: TS Terminal Circuit Wiring Diagram
Courtesy of TOYOTA MOTOR SALES, U.S.A., INC.

INSPECTION PROCEDURE

1. **Measure voltage between terminals TS and CG of DLC3.**

   CHECK:

   a. Turn the ignition switch ON.
   b. Measure the voltage between terminals TS and CG of the DLC3.

cardiagn.com

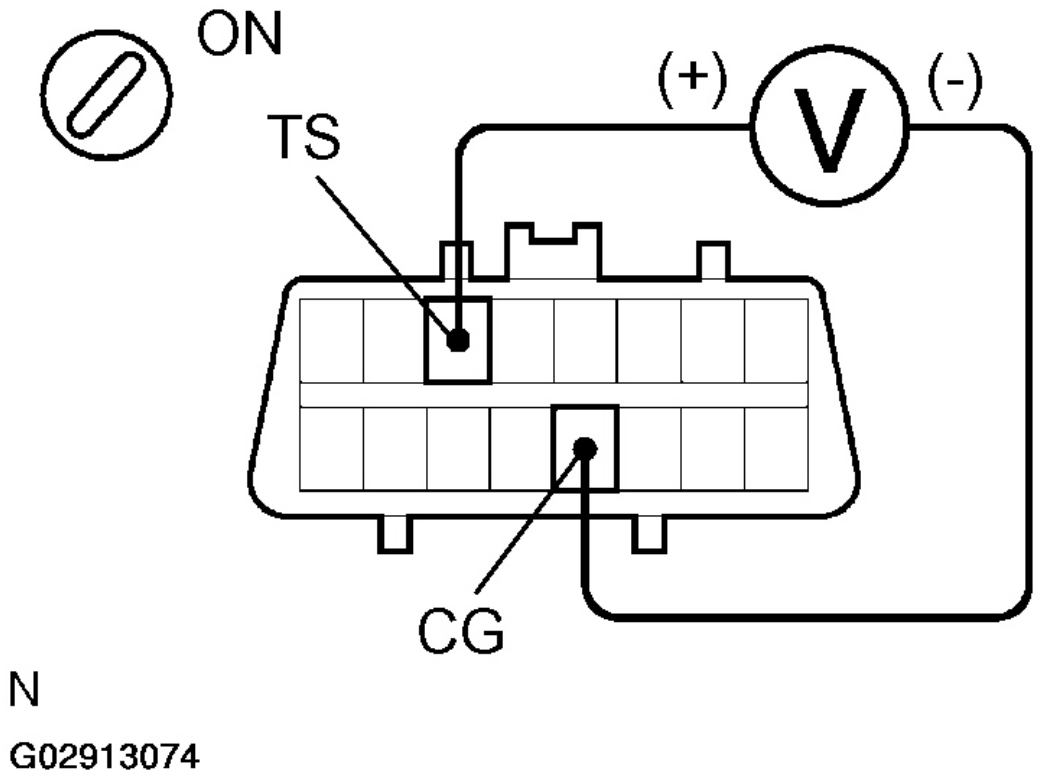

Fig. 107: Measuring Voltage Between Terminals TS & CG Of DLC3
Courtesy of TOYOTA MOTOR SALES, U.S.A., INC.

OK:

Voltage: 10 to 14 V

OK: If ABS warning light does not blink even after TS and CG have been connected, the ECU may be defective.

NG: Go to next step.

2. **Check for open and short circuit in harness and connector between skid control ECU and DLC3, and DLC3 and body ground (See HOW TO USE THE DIAGNOSTIC CHART AND INSPECTION PROCEDURE).**

   NG: Repair or replace harness and connector.

   OK: Check and replace skid control ECU (See HOW TO USE THE DIAGNOSTIC CHART AND INSPECTION PROCEDURE).

CHECK FOR FLUID LEAKAGE

cardiagn.com

Check for fluid leakage from actuator or hydraulic lines.

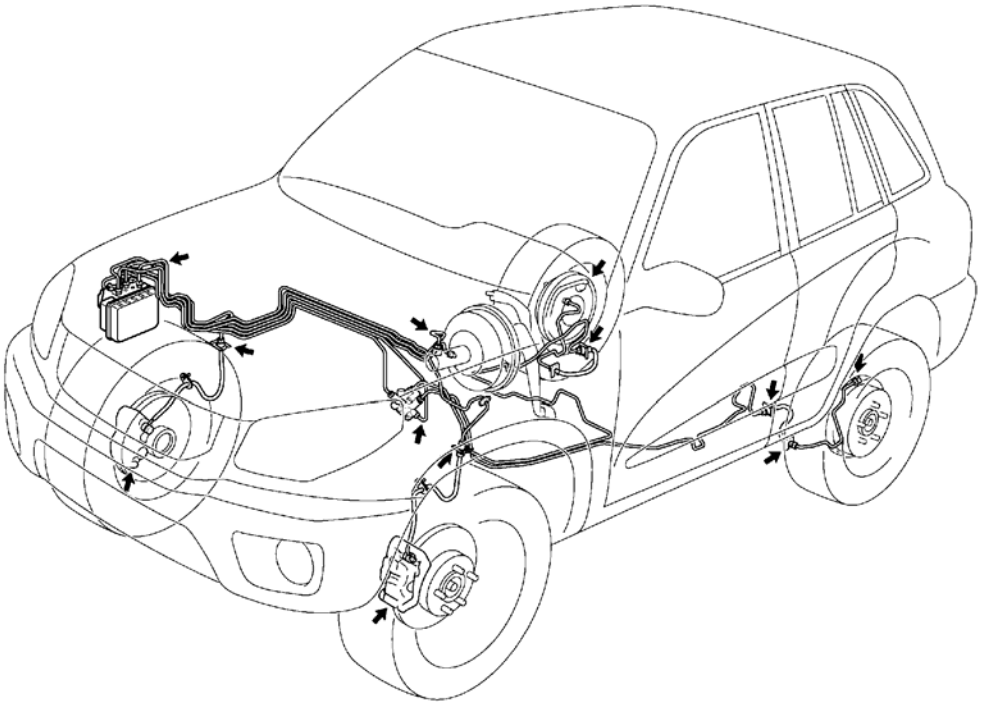

Fig. 108: Locating Fluid Leakage Points
Courtesy of TOYOTA MOTOR SALES, U.S.A., INC.

cardiagn.com