Protected by copyright. Copying for private or commercial purposes, in part or in whole, is not permitted unless authorised by Volkswagen AG. Volkswagen AG does not guarantee or accept any liability with respect to the correctness of information in this document. Copyright by Volkswagen AG.

Repair Manual

Golf 2015 ➤

Rear Final Drive

Edition 09.2013

List of Workshop Manual Repair GroupsList of Workshop Manual Repair GroupsList of Workshop Manual Repair Groups

Repair Group

00 - General, Technical Data

39 - Final Drive, Differential

Protected by copyright. Copying for private or commercial purposes, in part or in whole, is not permitted unless authorised by Volkswagen AG. Volkswagen AG does not guarantee or accept any liability with respect to the correctness of information in this document. Copyright by Volkswagen AG.

Technical information should always be available to the foremen and mechanics, because their careful and constant adherence to the instructions is essential to ensure vehicle road-worthiness and safety. In addition, the normal basic safety precautions for working on motor vehicles must, as a matter of course, be observed.

All rights reserved.
No reproduction without prior agreement from publisher.

Copyright © 2014 Volkswagen AG, Wolfsburg

D4B80416638

Contents

00 - General, Technical Data 1
1 **Identification** 1
1.1 Final Drive Identification 1
2 **Technical Data** 2
2.1 Transmission-Engine Allocation 2
2.2 Capacities 2
3 **Repair Information** 3
3.1 General Repair Information 3
3.2 Seals, Sealing Rings 4
3.3 Bolts and Nuts 4
4 **Safety Precautions** 5
4.1 Road Test with Testing Equipment Safety Precautions 5
4.2 Start/Stop System Safety Precautions 6
5 **Electrical Components** 7
5.1 Electrical Component Locations Overview 7

39 - Final Drive, Differential 8
1 **Specifications** 8
1.1 Fastener Tightening Specifications 8
2 **Driveshaft** 9
2.1 Driveshaft Overview 9
2.2 Driveshaft, Removing and Installing 10
2.3 Front Flexible Disc, Removing and Installing 13
2.4 Rear Flexible Disc, Removing and Installing 15
3 **Final Drive** 20
3.1 Final Drive, Removing and Installing 20
4 **Assembly Mounts** 27
4.1 Overview - Assembly Mounts 27
4.2 Subframe Mount, Removing and Installing 28
5 **Seals** 31
5.1 Seals Component Location Overview 31
5.2 Right Seal, Replacing 32
5.3 Left Seal, Replacing 33
5.4 Flange Shaft and Drive Axle Seal on Rear Final Drive, Replacing 34
6 **Gear Oil** 40
6.1 Gear Oil, Checking Level 40
7 **High-Performance Haldex Clutch Oil** 41
7.1 Haldex Clutch Oil, Checking Level 41
7.2 High-Performance Haldex Clutch Oil, Draining and Filling 42
8 **Haldex Clutch** 44
8.1 Function, Checking 44
8.2 Haldex Clutch Overview 44
8.3 Haldex Clutch Pump V181 Removing and Installing 46
8.4 Haldex Clutch, Removing and Installing 48
8.5 All Wheel Drive Control Module J492 , Removing and Installing 52
9 **Special Tools** 53
10 **Revision History** 60

Protected by copyright. Copyright by Volkswagen AG. Volkswagen AG does not guarantee or accept any liability with respect to the correctness of information in this document. Copyright by Volkswagen AG. Reproduced only and exclusively for internal training purposes. Not permitted for resale.

Protected by copyright. Copying for private or commercial purposes, in part or in whole, is not permitted unless authorised by Volkswagen AG. Volkswagen AG does not guarantee or accept any liability with respect to the correctness of information in this document. Copyright by Volkswagen AG.

00 – General, Technical Data

1 Identification

(Edition 09.2013)

⇒ “1.1 Final Drive Identification”, page 1

1.1 Final Drive Identification

⇒ “1.1.1 Final Drive Identification 0CQ”, page 1

1.1.1 Final Drive Identification 0CQ

Note

The ID on the “bottom side” of the final drive identifies which final drive is installed.

Example of the Identification:

-Arrow A- Final drive part number

-Arrow B- Final drive code letters

-Arrow C- Final drive build date

MYT	26	03	12
I	I	I	I
I	I	I	I
Code letters	Day	Month	Production year -2012-

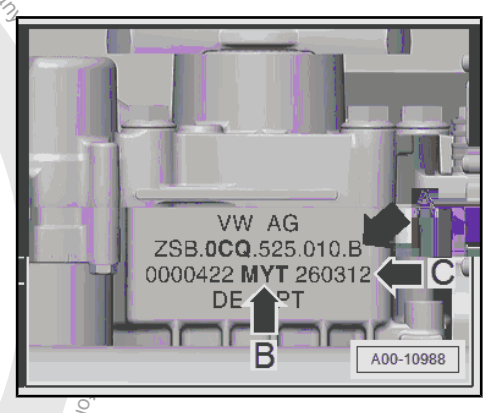

Protected by copyright. Copying for private or commercial purposes, in part or in whole is not permitted unless authorised by Volkswagen AG. Volkswagen AG does not guarantee or accept any liability with respect to the correctness of information in this document. Copyright by Volkswagen AG.

2 Technical Data

⇒ “2.1 Transmission-Engine Allocation”, page 2

⇒ “2.2 Capacities”, page 2

2.1 Transmission-Engine Allocation

Rear Final Drive	0CQ	
	(Haldex clutch generation V)	
Transmission type	6-speed manual transmission 02Q	
Code letters	PHF, PYP	
Engine	2.0L 77 kW TDI	2.0L 110 kW TDI
Driveshaft flange diameter	100 mm	

2.2 Capacities

⇒ “2.2.1 Capacities, Final Drive 0CQ”, page 2

2.2.1 Capacities, Final Drive 0CQ

Rear Final Drive	0CQ
	(Haldex clutch generation V)
Final drive capacity	Refer to ⇒ Fluid Capacity Tables; Rep. Gr. 03
Haldex clutch capacity	Refer to ⇒ Fluid Capacity Tables; Rep. Gr. 03
Replacement capacity in Haldex clutch • Change interval, refer to the ⇒ Maintenance Tables .	Refer to ⇒ Fluid Capacity Tables; Rep. Gr. 03

Protected by copyright. Copying for private or commercial purposes, in part or in whole, is not permitted unless authorised by Volkswagen AG. Volkswagen AG does not guarantee or accept any liability with respect to the correctness of information in this document. Copyright by Volkswagen AG.

3 Repair Information

⇒ “3.1 General Repair Information”, page 3

⇒ “3.2 Seals, Sealing Rings”, page 4

⇒ “3.3 Bolts and Nuts”, page 4

3.1 General Repair Information

⇒ “3.1.1 Oil”, page 3

⇒ “3.1.2 Fasteners”, page 3

⇒ “3.1.3 Bearings”, page 3

⇒ “3.1.4 Adjusting Shims”, page 4

Carefulness, cleanliness and the correct tools are required for transmission repairs to be successful. The usual basic safety precautions also, naturally apply when carrying out vehicle repairs.

A number of valid general instructions governing the various repair procedures which used to be repeated several times throughout the manual - are summarized here and apply to this manual.

- Determine the cause of the malfunction as accurately as possible using `Guided Fault Finding`, `OBD` and `Test Instruments` before starting any repairs on the Haldex clutch, refer to Vehicle Diagnostic Tester .

3.1.1 Oil

Note

The final drive and Haldex clutch have separate “oil circuits”.

The final drive is filled with “gear oil” and the Haldex clutch with “high performance Haldex clutch oil”.

Oil for the “final drive” and “Haldex clutch” refer to the Parts Catalog.

Do not mix “additives” into the oil.

Do not re-use drained transmission fluid.

Caution

Be very careful when working with transmission fluid. Dispose of drained transmission fluid correctly.

3.1.2 Fasteners

- Do not overstretch the circlips.
- Replace damaged or stretched circlips.
- The circlips must fit completely inside the groove.

3.1.3 Bearings

- Install needle bearings with lettered side (thicker metal) racing the fitting tool.
- Insert all the bearings in transmission with gear oil.

Protected by copyright. Copying for private or commercial purposes, in part or in whole, is not permitted unless authorised by Volkswagen AG. Volkswagen AG does not guarantee or accept any liability with respect to the correctness of information in this document. Copyright by Volkswagen AG.

- Replace all the tapered roller bearings that are on the same shaft. Use tapered roller bearings from the same manufacturer.
- Heat the inner races to approximately 100 °C (212 °F) before installing
- Do not interchange outer and inner bearing races with those from other bearing of the same size. The bearings are paired.

3.1.4 Adjusting Shims

- Measure the shims at several locations with a micrometer caliper. Tolerance variations make it possible to find the exact shim thickness required.
- Check for burrs and damage.
- Only install perfect shims.

3.2 Seals, Sealing Rings

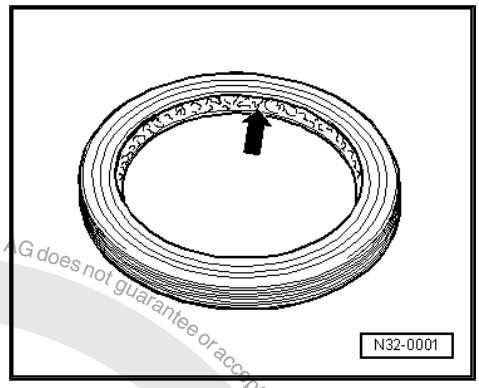

- Replace the O-rings, seals and gaskets.
- After removing seal rings and seals, always inspect the contact surfaces at housing or shaft for burrs resulting from removal, or for other signs of damage.
- Before installing the seal rings, lightly oil the outer circumference and fill the space between the sealing lips -arrow- halfway with Grease - G 052 128 A1- .
- The open side of the seals point toward the fluid to be sealed in.
- Use DSG® transmission fluid only. Other lubricants cause malfunctions.
- Check the oil level in the Haldex clutch after replacing gaskets, O-rings and seals.

3.3 Bolts and Nuts

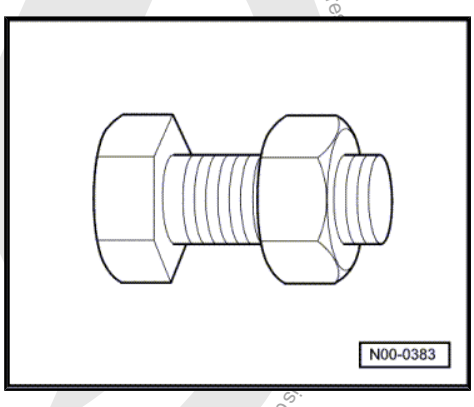

- Loosen or tighten bolts and nuts on the covers or housings diagonally.
- The tightening specifications stated apply to non-oiled nuts and bolts.
- Clean the threads on bolts that were installed with locking compound. After doing that, install the bolts with Locking Compound - AMV 185 101 A1- .
- Threaded holes where self-locking bolts or bolts with locking compound were installed must be cleaned with a thread tap. Otherwise the bolts may shear off when installing again.
- Always replace self-locking nuts and bolts.

Protected by copyright. Copying for private or commercial purposes, in part or in whole, is not permitted unless authorised by Volkswagen AG. Volkswagen AG does not guarantee or accept any liability with re
s document. Copyright by Volkswagen AG.

4 Safety Precautions

⇒ “4.1 Road Test with Testing Equipment Safety Precautions”, page 5

⇒ “4.2 Start/Stop System Safety Precautions”, page 6

4.1 Road Test with Testing Equipment Safety Precautions

To avoid injury and damage to the vehicle, observe the following:

WARNING

Vehicles with a DSG® transmission - accidentally moving the selector lever when the engine is running can cause an accident and personal injury.

- *Move the selector lever into “P” and pull the parking brake lever before working with the engine running.*

Poison!

- *When engine is running, an exhaust extraction system must always be connected to exhaust system.*

If testers and measuring equipment must be used during a test drive, follow the points below:

WARNING

Distraction and testing equipment that is not secured properly can cause accidents.

The passenger airbag could pose a risk if it deploys in a collision.

- *Operating testing equipment while driving causes it to shift position.*
- *There is an increased risk of injury due to unsecured testing equipment.*

- *Always secure testing equipment on the rear seat using a strap and have a second person in the rear seat operate it.*

Observe the following to prevent personal injury and damage to the electrical/electronic components:

- Connect and disconnect test equipment only when the ignition is off.

Caution

Risk of damaging electronic components when disconnecting the battery.

- *Complete the steps for disconnecting the battery.*
- *Always turn off the ignition before disconnecting the battery.*

– Disconnect the battery, refer to ⇒ Electrical Equipment; Rep. Gr. 27 ; Battery; Battery, Disconnecting and Connecting .

Protected by copyright. Copyright by Volkswagen AG. Volkswagen AG does not guarantee or accept any liability with respect to the correctness of information in this document. Copyright by Volkswagen AG.

4.2 Start/Stop System Safety Precautions

WARNING

Danger of injury through automatic motor starting with vehicles with the Start/Stop System.

- *For vehicles with an activated Start/Stop System (recognizable from a notification in the instrument cluster), the motor can be started automatically if needed.*
- *For this reason make sure the Start/Stop System is disabled when working on the vehicle (turn off ignition, if needed, turn the ignition back on).*

Protected by copyright. Copying for private or commercial purposes, in part or in whole, is not permitted unless authorised by Volkswagen AG. Volkswagen AG does not guarantee or accept any liability with respect to the correctness of information in this document. Copyright by Volkswagen AG.

5 Electrical Components

⇒ “5.1 Electrical Component Locations Overview”, page 7

5.1 Electrical Component Locations Overview

5.1.1 Electrical Component Locations Overview, Rear Final Drive “0CQ” with Haldex clutch Generation V

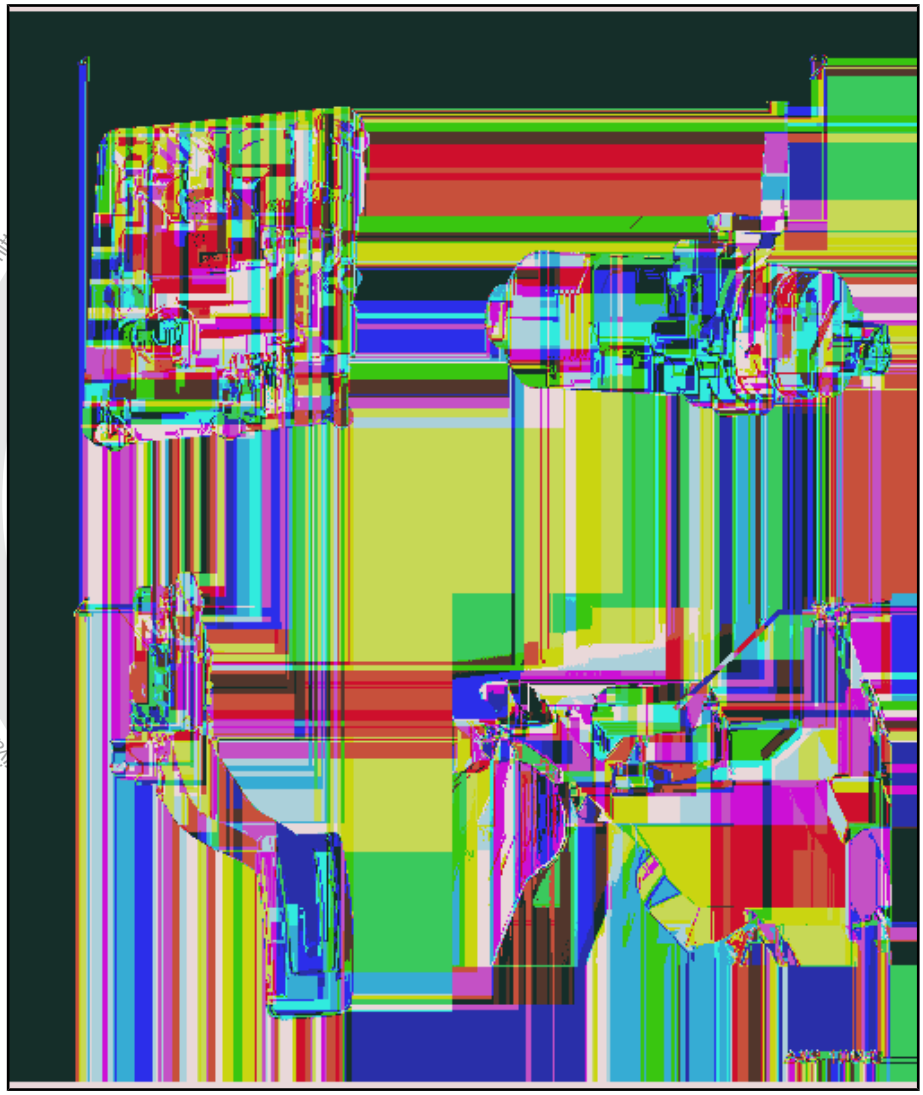

1 - All Wheel Drive Control Module - J492-

- ❑ Important signals are transmitted from the engine control module and ABS Control Module - J104- via the Data bus to the All Wheel Drive Control Module .
- ❑ Removing and installing, refer to ⇒ “8.5.1 All Wheel Drive Control Module J492 , Removing and Installing, Generation V”, page 52

2 - Haldex Clutch Pump - V181-

- ❑ Can be checked in “Guided Fault Finding” using the Vehicle Diagnostic Tester .
- ❑ Removing and installing, refer to ⇒ “8.3.1 Haldex Clutch Pump V181 , Removing and Installing, Generation V”, page 46 .

3 - Data Link Connector (DLC)

- ❑ Installed location: inside the left front footwell

4 - Accelerator Pedal Position Sensor - G79- and Accelerator Pedal Position Sensor 2 - G185-

- ❑ Removing and installing, refer to ⇒ Fuel Supply System; Rep. Gr. 20 ; Accelerator Pedal Mechanism .

39 – Final Drive, Differential

1 Specifications

⇒ “1.1 Fastener Tightening Specifications”, page 8

1.1 Fastener Tightening Specifications

Components	Fastener Size	Nm
All Wheel Drive control module to Haldex clutch housing bolt	-	9.5 ± 0.5
Drain plug	-	30
Filler plug	-	15
Flange/driveshaft to Haldex clutch housing nut [1]	-	210
Front flexible disc to driveshaft bolt [1]	-	50 + 90°
Front flexible disc to transmission with bevel gear bolt	-	60
Flexible disc with vibration damper to driveshaft bolt [1]	-	50 + 90°
Flexible disc with vibration damper to rear final drive bolt	-	60
Haldex clutch housing to rear final drive bolt	-	50
Haldex clutch pump to Haldex clutch housing bolt	-	9.5 ± 0.5
Intermediate bearing bolt	-	25
• [1] Always replace		

Protected by copyright. Copyright by Volkswagen AG. Volkswagen AG does not guarantee or accept any liability with respect to the correctness of information in this document. Copyright by Volkswagen AG.

2 Driveshaft

⇒ “2.1 Driveshaft Overview”, page 9
⇒ “2.2 Driveshaft, Removing and Installing”, page 10
⇒ “2.3 Front Flexible Disc, Removing and Installing”, page 13
⇒ “2.4 Rear Flexible Disc, Removing and Installing”, page 15

2.1 Driveshaft Overview

Protected by copyright. Copyright for private or commercial purposes, in part or in whole, is not permitted unless authorised by Volkswagen AG. Volkswagen AG does not guarantee or accept any liability with respect to the correctness of information in this document. Copyright by Volkswagen AG.

Note

Do not perform any service work on the driveshaft.

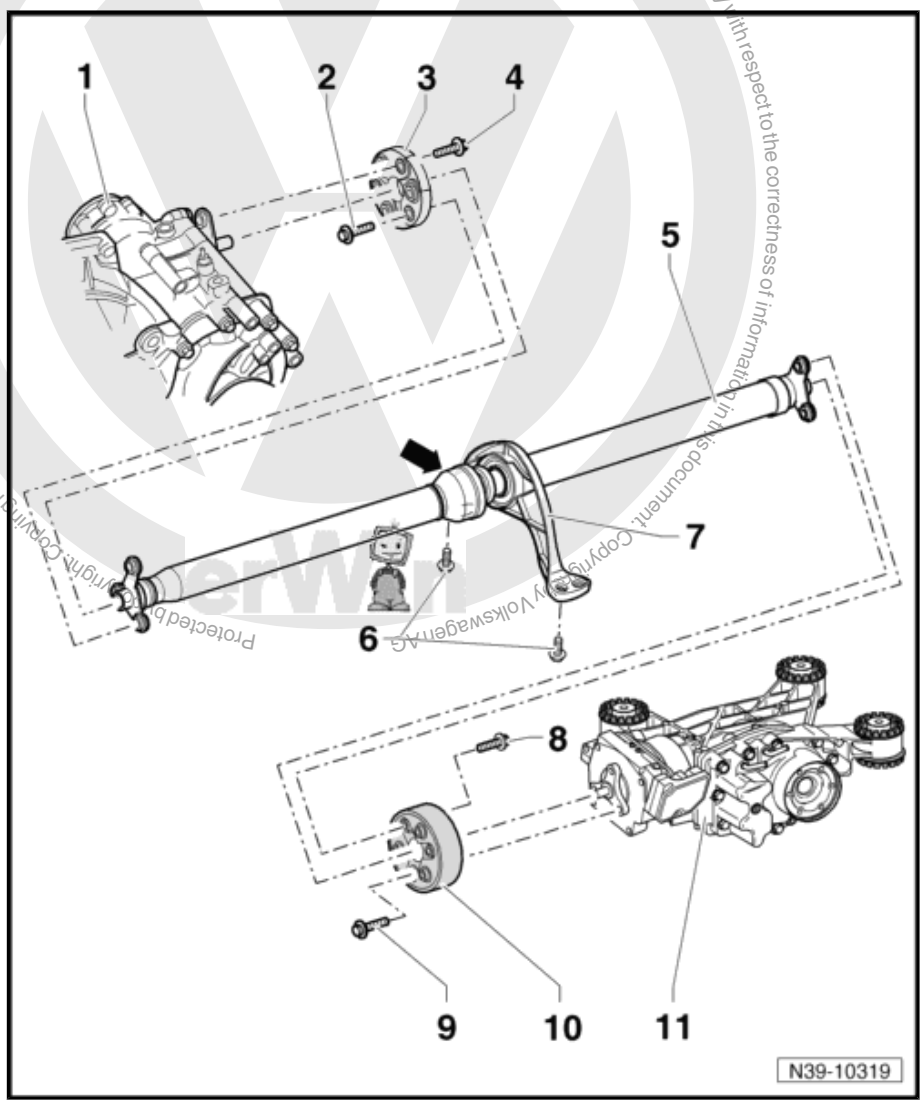

1 - Transmission with Bevel Gear

2 - Bolt

- ❑ 50 Nm + an additional 90° turn
- ❑ Always replace
- ❑ Allocation, refer to the Parts Catalog.
- ❑ For flexible disk to driveshaft

3 - Front Flexible Disc

- ❑ Allocation, refer to the Parts Catalog.

4 - Bolt

- ❑ 60 Nm.
- ❑ Allocation, refer to the Parts Catalog.
- ❑ For flexible disk to bevel gear.

5 - Driveshaft

- ❑ It cannot be separated at the joint -arrow-.
- ❑ Allocation, refer to the Parts Catalog.
- ❑ Removing and installing, refer to ⇒ “2.2 Driveshaft, Removing and Installing”, page 10

6 - Bolt

- ❑ 25 Nm.
- ❑ Allocation, refer to the Parts Catalog.

7 - Intermediate Bearing

- ❑ Align it so that it is free of tension.

8 - Bolt

- ❑ 50 Nm + an additional 90° turn
- ❑ Always replace

- ❑ Allocation, refer to the Parts Catalog
- ❑ For flexible disk to driveshaft

9 - Bolt

- ❑ 60 Nm.
- ❑ Allocation, refer to the Parts Catalog.
- ❑ For attaching the flexible disk to the final drive

10 - Flexible Disc with Vibration Damper

- ❑ Allocation, refer to the Parts Catalog.

11 - Rear Final Drive

- ❑ Removing and installing, refer to ⇒ “3.1 Final Drive, Removing and Installing”, page 20 .

Protected by copyright. Copyright by Volkswagen AG. Volkswagen AG does not guarantee or accept any liability with respect to the correctness of information in this document. Copying for private or commercial purposes, in part or in whole, is not permitted unless authorized by Volkswagen AG.

2.2 Driveshaft, Removing and Installing

Note

- *Perform work on driveshaft on a two-column lift if possible.*
- *Mark the position of all the parts to each other before removing them. Install in the same position otherwise the imbalance will be excessive and the bearings could get damaged causing rumbling noises.*
- *Do not kink the driveshaft, only store and move when fully extended.*
- *Do not allow the driveshaft to “hang down” during removal. Always support it.*
- *Always remove or install the driveshaft horizontally with respect to the drive flange.*

Special tools and workshop equipment required

- Torque Wrench 5-50Nm - VAG1331-
- Torque Wrench 1332 40-200Nm - VAG1332-
- Engine and Gearbox Jack - VAS6931-
- Counterhold - Kit - Multiple Use - T10172-

Removing

– Remove the noise insulation, refer to ⇒ Body Exterior; Rep. Gr. 66 ; Noise Insulation; Overview - Noise Insulation .

– Remove the exhaust system, refer to ⇒ Engine Mechanical, Fuel Injection and Ignition; Rep. Gr. 26 ; Exhaust Pipes/Mufflers; Overview - Muffler .

– Remove the bolts -1 and 2- from the pendulum support.

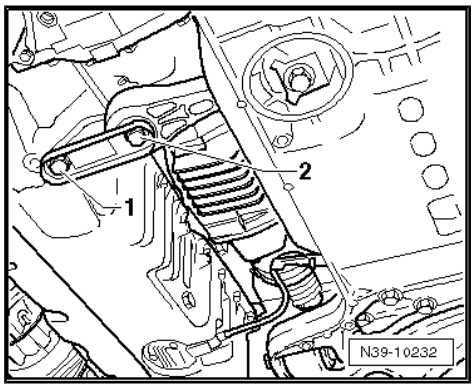

– Press the “engine and transmission” forward and secure the position with a suitable piece of wood -A-.

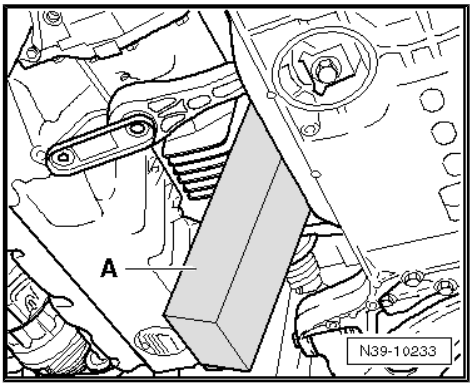

– Remove the bolts -A and B- from the bevel box and remove heat shield -1-.
– Remove the center tunnel heat shield under the intermediate bearing, refer to ⇒ Body Exterior; Rep. Gr. 66 ; Underbody Panel; Overview - Underbody Trim Panels .
– Remove the rear tunnel brace, refer to ⇒ Body Exterior; Rep. Gr. 66 ; Underbody Panel; Overview - Underbody Trim Panels .
– Loosen the driveshaft from the bevel box and the rear final drive but do not remove it.

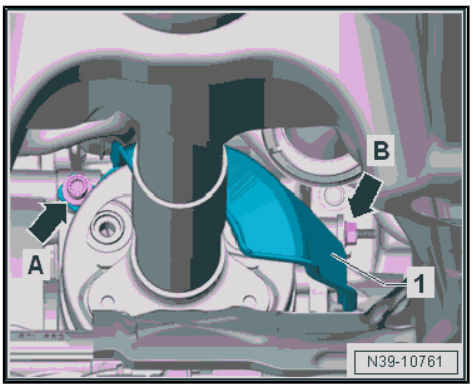

– Counterhold the rear final drive to loosen and tighten the driveshaft.

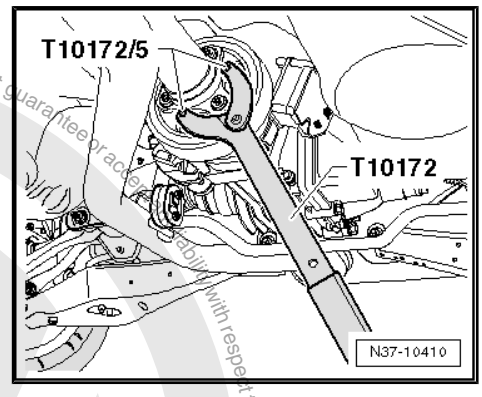

– Before removing, see if there is a marking (color dot) on the flexible disc and on the final drive output flange -arrows-. If not, mark the position of the flexible disc and flange/driveshaft on the final drive with respect to one another -arrows-.

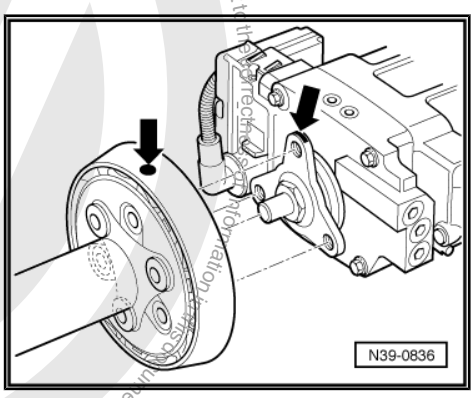

Protected by copyright. Copying for private or commercial purposes, in part or in whole, is not permitted unless authorised by Volkswagen AG. Volkswagen AG does not guarantee or accept any liability with respect to the correctness of information in this document. Copyright by Volkswagen AG.

– Also mark the position of the driveshaft with respect to the flange on the bevel gear.

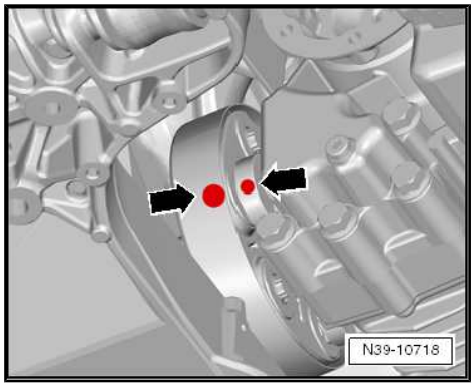

– Remove the driveshaft bolts from the front bevel box and the rear final drive -arrows-.

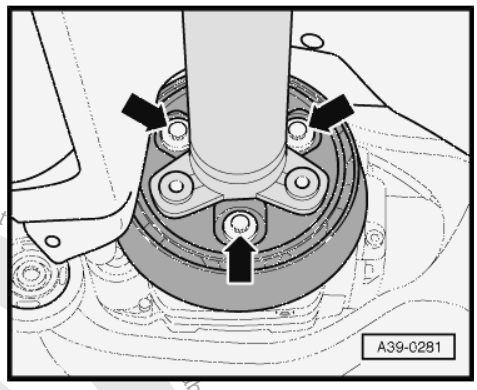

Note

- *The centering pins on the bevel box, the rear final drive and in the center through the intermediate bearing hold the driveshaft in place.*
- *Two technicians are needed to remove the driveshaft.*

– Remove the intermediate bearing -arrows- and if possible, remove the driveshaft to the rear in its fully extended length.

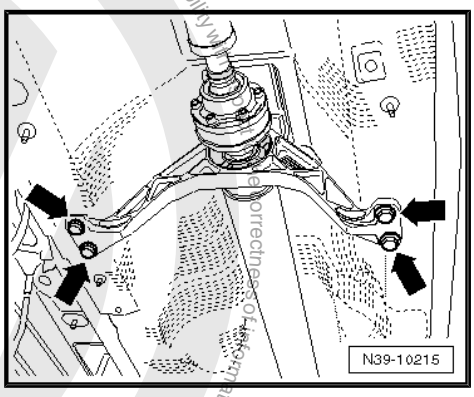

Protected by copyright. Copying for private or commercial purposes, in part or in whole, is not permitted unless authorised by Volkswagen AG. Volkswagen AG does not guarantee the correctness of information in this document. Copyright by Volkswagen AG.

– When removing and installing the driveshaft, be careful not to damage the bushing -arrow-.

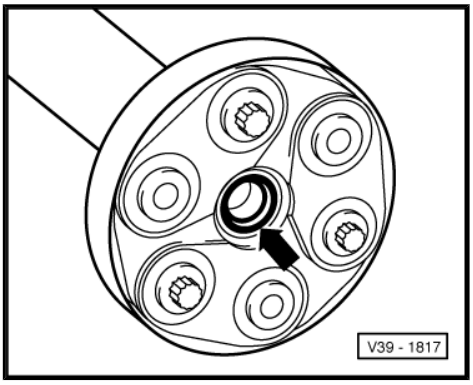

WARNING

To prevent damaging the protective boot in the intermediate bearing, remove and install the driveshaft in its fully extended position; likewise, store it in this position.

Installing

Install in reverse order of removal. Note the following:

– Install all parts marked to each other in original positions.

Install the Intermediate Bearing without Tension

– Align the intermediate bearing in its elongated holes so the driveshaft or bearing is not under stress.

– Tighten the intermediate bearing only after the driveshaft has been attached.

– Tighten the driveshaft and intermediate bearing. Tightening specifications.

– Remove the heat shield -1- from the bevel box.

Tightening Specification:

♦ Bolt -A- 20 Nm

♦ Bolt -B- 40 Nm

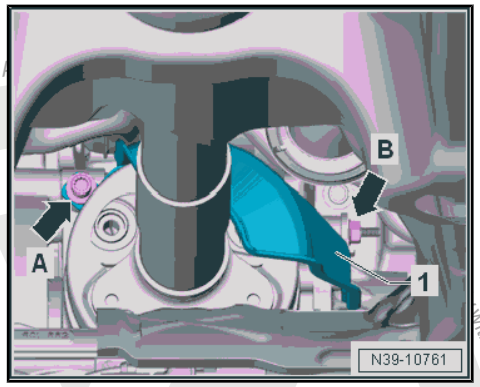

– Tighten the pendulum support with "new" bolts. Tightening specifications, refer to ⇒ Suspension, Wheels, Steering; Rep. Gr. 40 ; Subframe; Overview - Subframe .

– Install the center tunnel heat shield under the intermediate bearing, refer to ⇒ Body Exterior; Rep. Gr. 66 ; Underbody Panel; Overview - Underbody Trim Panels .

– Install the exhaust system, refer to ⇒ Engine Mechanical, Fuel Injection and Ignition; Rep. Gr. 26 ; Exhaust Pipes/Mufflers; Overview - Muffler .

– Install the rear tunnel brace, refer to ⇒ Body Exterior; Rep. Gr. 66 ; Underbody Panel; Overview - Underbody Trim Panels .

– Install the noise insulation, refer to ⇒ Body Exterior; Rep. Gr. 66 ; Noise Insulation; Overview - Noise Insulation .

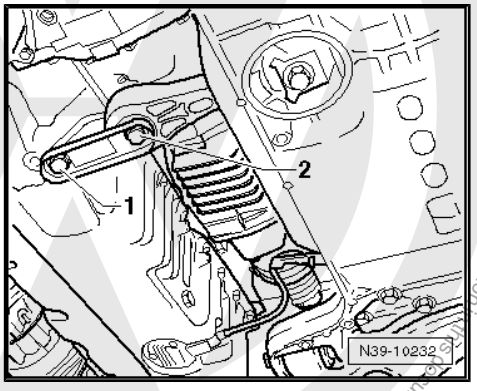

2.3 Front Flexible Disc, Removing and Installing

Short Description:

Remove and install the front flexible disc only when the driveshaft is removed.

Special tools and workshop equipment required

Protected by copyright. Copyright by Volkswagen AG.
Copyright by Volkswagen AG, Wolfsburg. All rights reserved. Distribution, publication, copy and storage in electronic media only permitted with express consent of Volkswagen AG. Copyright by Volkswagen AG.
Protected by copyright. Copyright by Volkswagen AG.
Copyright by Volkswagen AG, Wolfsburg. All rights reserved. Distribution, publication, copy and storage in electronic media only permitted with express consent of Volkswagen AG. Copyright by Volkswagen AG.
Protected by copyright. Copyright by Volkswagen AG.
Copyright by Volkswagen AG, Wolfsburg. All rights reserved. Distribution, publication, copy and storage in electronic media only permitted with express consent of Volkswagen AG. Copyright by Volkswagen AG.
Protected by copyright. Copyright by Volkswagen AG.
Copyright by Volkswagen AG, Wolfsburg. All rights reserved. Distribution, publication, copy and storage in electronic media only permitted with express consent of Volkswagen AG. Copyright by Volkswagen AG.

- Torque Wrench 5-50Nm - VAG1331-
- Torque Wrench 1332 40-200Nm - VAG1332-
- Engine and Gearbox Jack - VAS6931-
- Counterhold - Kit - Multiple Use - T10172-

Removing

Note

- *A twin-pillar lifting platform should be used when working on the driveshaft.*
- *Mark the position of all the parts to each other before removing them. Install in the same position otherwise the imbalance will be excessive and the bearings could get damaged causing rumbling noises.*
- *Do not kink the driveshaft, only store and move when fully extended.*

– Remove the driveshaft, refer to ⇒ "2.2 Driveshaft, Removing and Installing", page 10 .

– Lay the driveshaft down fully extended.

The following illustration show it installed.

Remove the front flexible disc from the driveshaft -arrows-.

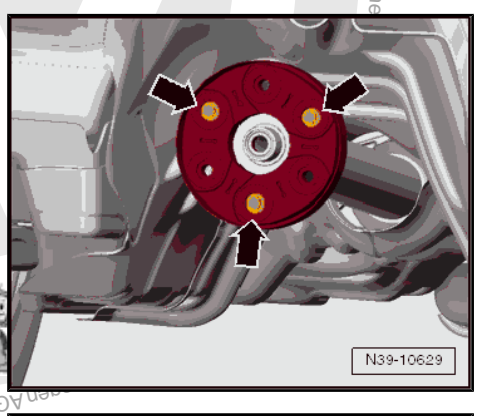

– Counterhold using Counterhold - Kit - Multiple Use - T10172- when loosening and tightening the bolts.

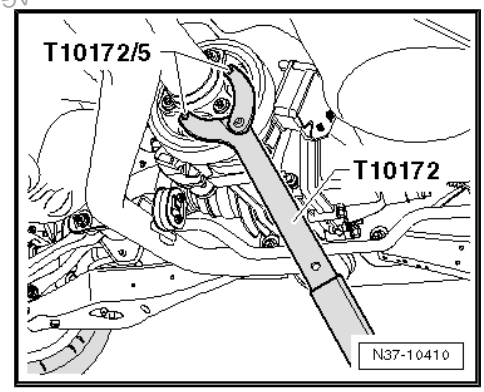

Installing

Install in reverse order of removal. Note the following:

Protected by copyright. Copying for private or commercial purposes, in part or in whole, is not permitted unless authorised by Volkswagen AG. Volkswagen AG does not guarantee or accept any liability with respect to the correctne

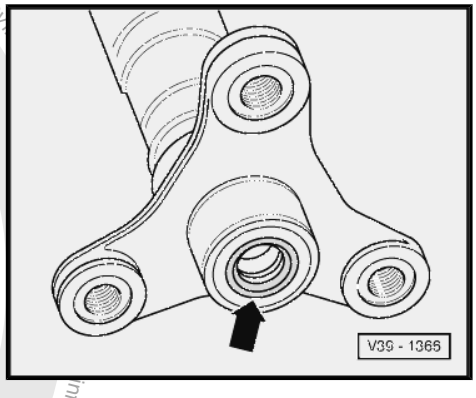

Note

- *Sealing rings in driveshaft flanges -arrow- must not be damaged when removing and installing.*
- *Replace the driveshaft if it is damaged.*
- *Do not tilt the driveshaft. Push it horizontally onto the centering pins.*
- *Install all driveshaft parts marked in relation to each other in same position when reinstalling.*

– Attach the flexible disc to the driveshaft using new bolts. Tightening specification, refer to ⇒ "2.1 Driveshaft Overview", page 9 .

Flexible Disc and Heat Shield Installed Position:

- The open side of the heat shield faces away from the driveshaft.
- Install the flexible disc so that the heat shield touches the driveshaft flange.

– Install the driveshaft, refer to ⇒ "2.2 Driveshaft, Removing and Installing", page 10 .

2.4 Rear Flexible Disc, Removing and Installing

Special tools and workshop equipment required

- Torque Wrench 5-50Nm - VAG1331-
- Torque Wrench 1332 40-200Nm - VAG1332-
- Engine and Gearbox Jack - VAS6931-
- Counterhold - Kit - Multiple Use - T10172-

Removing

Note

- *A twin-pillar lifting platform should be used when working on the driveshaft.*
- *Mark the position of all the parts to each other before removing them. Install in the same position otherwise the imbalance will be excessive and the bearings could get damaged causing rumbling noises.*
- *Do not kink the driveshaft, only store and move when fully extended.*

The following applies only to installing the removed parts.

Copyright: Copying for private, commercial purposes, in part or in whole, is not permitted unless authorised by Volkswagen AG. Volkswagen AG does not guarantee or accept any information in this document. Copyright by Volkswagen AG.

– Before removing, see if there is a marking (color dot) on the flexible disc and on the flange/final drive as well as on the flange/driveshaft -arrows-. If the dot is not there, mark the installed position of the flexible disc -arrows-.

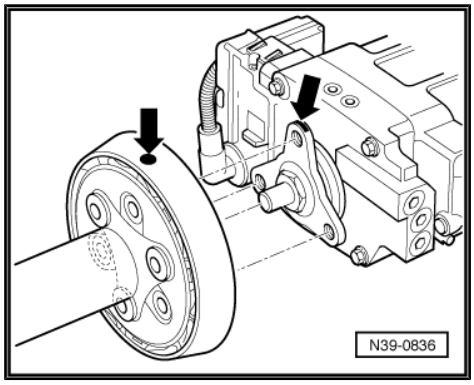

Continuation for All:

– Remove the noise insulation, refer to ⇒ Body Exterior; Rep. Gr. 66 ; Noise Insulation; Overview - Noise Insulation .

– Support the front part of the exhaust system using the Engine and Gearbox Jack - VAS6931- .

– Separate the exhaust system at the clamping sleeve -arrows- and remove the rear section of the exhaust system, refer to ⇒ Engine Mechanical, Fuel Injection and Ignition; Rep. Gr. 26 ; Exhaust Pipes/Mufflers; Overview - Muffler .

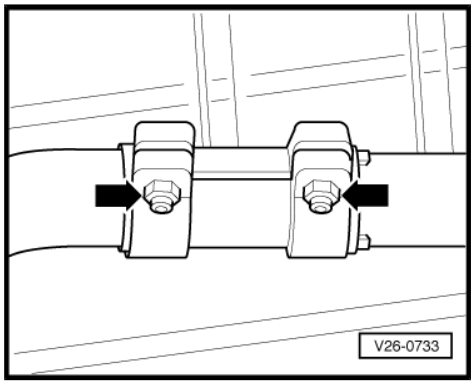

Note

Do not bend the exhaust system decoupling element more than 10° or it could be damaged.

– Remove the bolts -1 and 2- from the pendulum support.

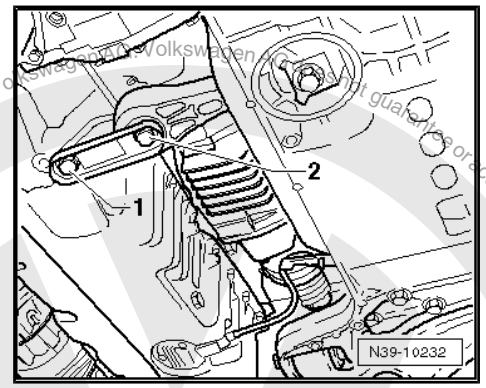

– Press the “engine and transmission” forward slightly and secure it with a suitable piece of wood -A-.

– Remove the center tunnel heat shield under the intermediate bearing, refer to ⇒ Body Exterior; Rep. Gr. 66 ; Underbody Panel; Overview - Underbody Trim Panels.

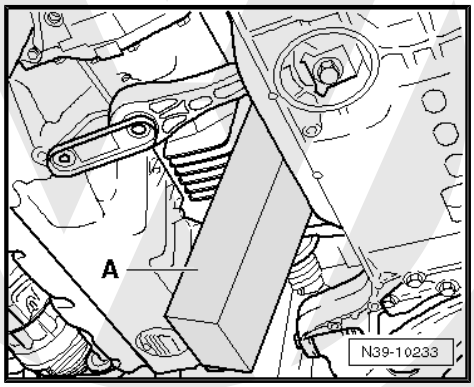

Protected by copyright. Copying for private or commercial purposes, in part or in whole, is not permitted unless authorised by Volkswagen AG. Volkswagen AG does not guarantee or accept any liability with respect to the correctness of information in this document. Copyright by Volkswagen AG.

– Remove the flexible disc with the vibration damper from the rear final drive -arrows-.

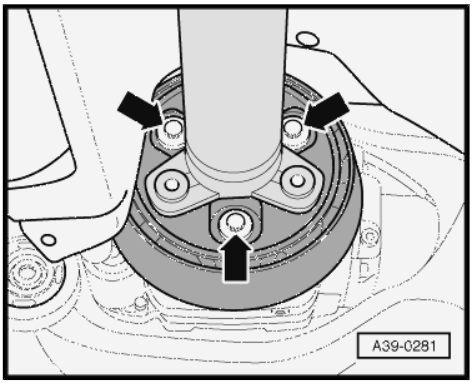

– Counterhold using Counterhold - Kit - Multiple Use - T10172- when loosening and tightening the bolts.

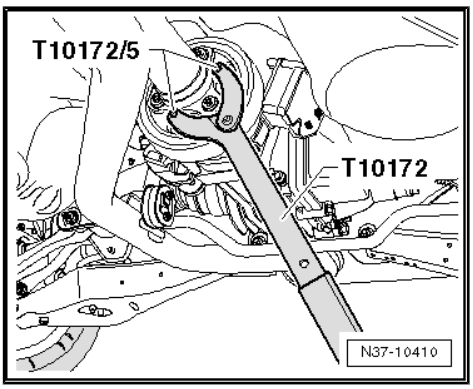

– Remove the bolts -arrows- from the intermediate bearing.

– Remove the driveshaft from the final drive and lay it on the tunnel brace; place a cloth on the tunnel brace to protect the shaft.

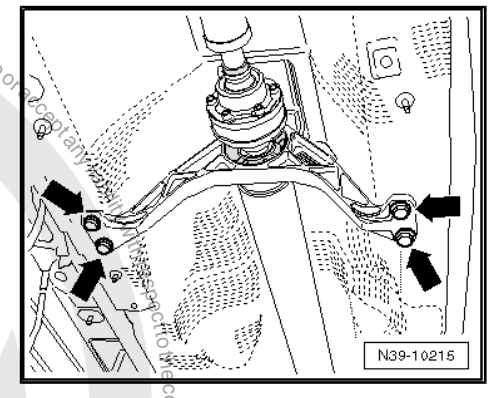

– When removing and installing the driveshaft, be careful not to damage the bushing -arrow-.

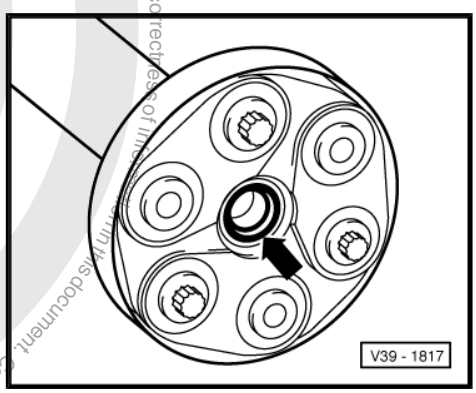

Protected by copyright. Copying for private or commercial purposes, in part or in whole, is not permitted unless authorised by Volkswagen AG. Volkswagen AG does not guarantee or accept any liability with respect to the correctness of information in this document. Copyright by Volkswagen AG.

– Secure the intermediate bearing to the body with 2 bolts -arrows- after removing the driveshaft. This way the front flexible disc will not be unnecessarily loaded.

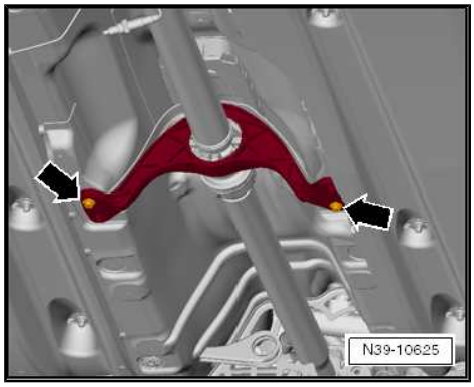

Remove the rear flexible disc with the vibration damper from the driveshaft.

Installing

Install in reverse order of removal. Note the following:

Note

- *Sealing rings in driveshaft flanges -arrow- must not be damaged when removing and installing.*
- *Replace the driveshaft if it is damaged.*
- *Do not tip rear driveshaft tube, push horizontally onto centering pins.*
- *Install all driveshaft parts marked in relation to each other in same position when reinstalling.*

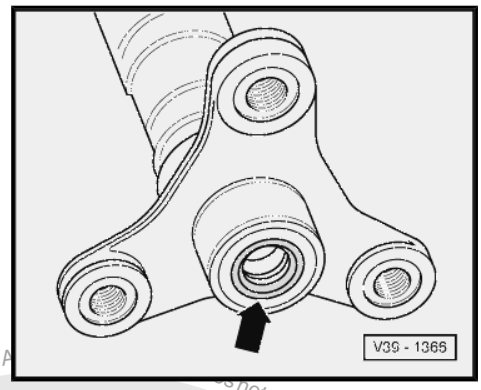

– Attach the flexible disc to the driveshaft using new bolts. Tightening specification, refer to
⇒ “2.1 Driveshaft Overview”, page 9 .

Location of Flexible Disc with Vibration Damper:

- The brace on the outer diameter -arrows- faces away from the driveshaft tube.
- Each of the three protruding sleeves on the flange/driveshaft and on the flange/final drive engages in the mounting holes in the flexible disc.

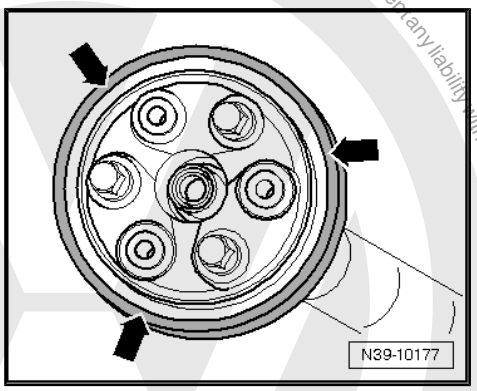

The following applies only to installing the removed flexible disc.

– Attach the driveshaft to the flange/driveshaft on the rear final drive so that the markings -arrows- line up.

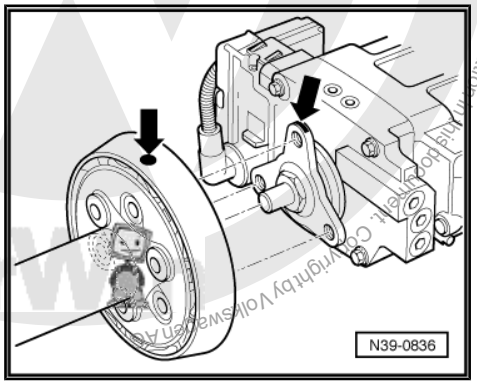

Protected by copyright. Copying for private or commercial purposes, in part or in whole, is not permitted unless authorised by Volkswagen AG. Volkswagen AG does not guarantee or accept any liability with respect to the correctness of information. Copyright by Volkswagen AG.

– When removing and installing the driveshaft, be careful not to damage the bushing -arrow-.

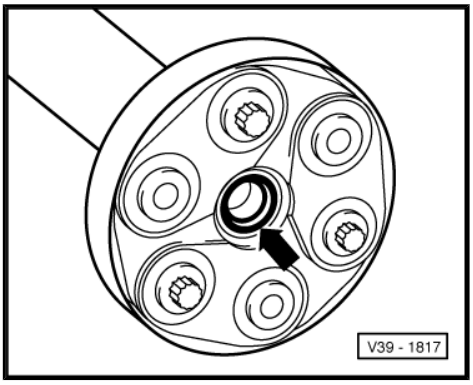

Install the Intermediate Bearing without Tension.

– Align the intermediate bearing in its elongated holes so the driveshaft or bearing is not under stress.

– Tighten the intermediate bearing only after the driveshaft has been attached.

– Tighten the driveshaft and intermediate bearing. Tightening specifications, refer to ⇒ “2.1 Driveshaft Overview”, page 9 .

– Tighten the pendulum support with “new” bolts. Tightening specifications, refer to ⇒ Suspension, Wheels, Steering; Rep. Gr. 40 ; Subframe; Overview - Subframe .

– Install the center tunnel heat shield under the intermediate bearing, refer to ⇒ Body Exterior; Rep. Gr. 66 ; Underbody Panel; Overview - Underbody Trim Panels .

– Install the rear section of the exhaust system, refer to ⇒ Engine Mechanical, Fuel Injection and Ignition; Rep. Gr. 26 ; Exhaust Pipes/Mufflers; Overview - Muffler .

– Install the noise insulation, refer to ⇒ Body Exterior; Rep. Gr. 66 ; Noise Insulation; Overview - Noise Insulation .

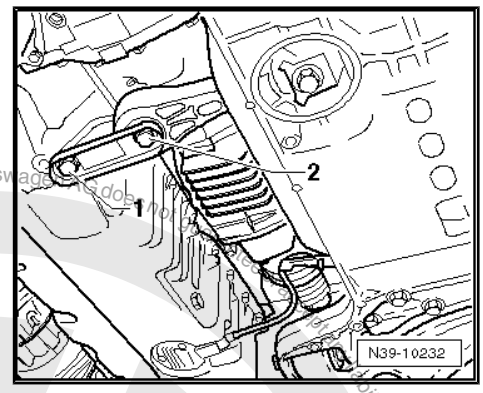

Protected by copyright. Copyright for private or commercial purposes, in part or in whole, is not permitted unless authorised by Volkswagen AG. Volkswagen AG does not guarantee or accept any liability with respect to the correctness of information in this document. Copyright by Volkswagen AG.

3 Final Drive

⇒ “3.1 Final Drive, Removing and Installing”, page 20

3.1 Final Drive, Removing and Installing

Short Description

The rear axle is lowered at the rear mounting points.

The stabilizer bar and the rear spring are removed, the driveshaft is removed from the final drive. Electrical connections and ventilation lines are disconnect at final drive.

Remove the “rear section” of the exhaust system with the heat shield and disconnect the driveshaft from the final drive.

The final drive is “lowered” with the transmission jack downward and diagonally in the direction of travel.

Special tools and workshop equipment required

- ♦ Engine and Gearbox Jack - VAS6931-
- ♦ Counterhold - Kit - Multiple Use - T10172-
- ♦ Multipoint Socket - T10035- and if necessary Bits for VAG1331/13 - T10099-

Removing

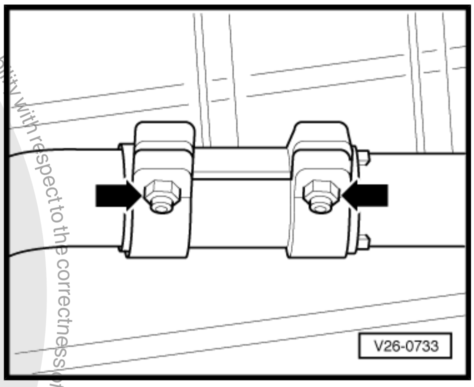

– Separate the exhaust system at the clamping sleeve -arrows- and remove the rear section of the exhaust system, refer to ⇒ Engine Mechanical, Fuel Injection and Ignition; Rep. Gr. 26 ; Exhaust Pipes/Mufflers; Overview - Muffler .

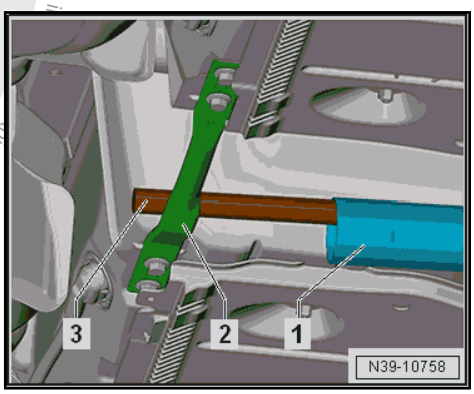

– Place a pipe or pry bar -3- in the front exhaust pipe -1- and lay it on the tunnel brace -2-.

Note

Do not bend the exhaust system decoupling element more than 10° or it could be damaged.

– Remove the rear stabilizer bar, refer to ⇒ Suspension, Wheels, Steering; Rep. Gr. 42 ; Stabilizer Bar; Stabilizer Bar, Removing and Installing .

– Remove left and right drive axles from rear final drive.

Note

For the next steps it is important that the multi-link axle springs are removed. This applies to the right and left side.

Protected by copyright. Copying for private or commercial purposes, in part or in whole, is not permitted unless authorised by Volkswagen AG. Volkswagen AG does not guarantee or accept any liability with respect to the correctness of information in this document. Copyright by Volkswagen AG.

– Position the Engine and Gearbox Jack - VAS6931- -1- under the tie rod, and push upward until the driveshaft can be removed from the final drive flange.

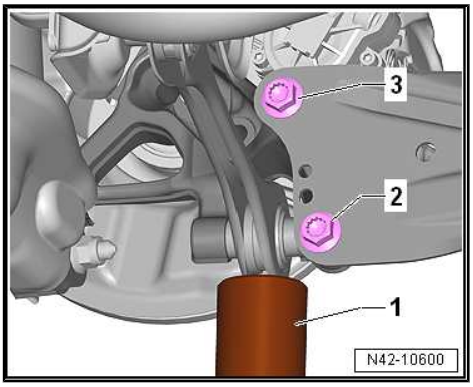

Note

Ignore items -2 and 3-.

– Guild the driveshaft carefully down.

– Looses the rear axle from the rear mounting points -arrows- and lower approximately 40 mm, refer to ⇒ Suspension, Wheels, Steering; Rep. Gr. 42 ; Rear Axle; Rear Axle, Lowering .

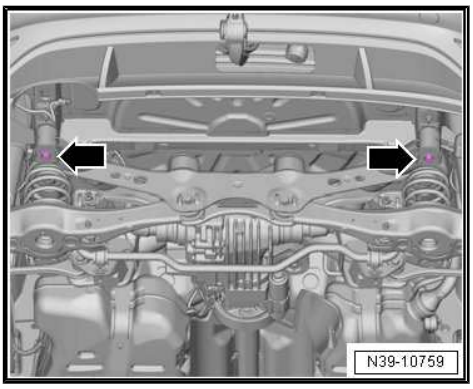

– Remove the rear final drive bolts from the rear axle using the Multipoint Socket - T10035- . To remove the bolts the Bits for VAG1331/13 - T10099/1- can also be used.

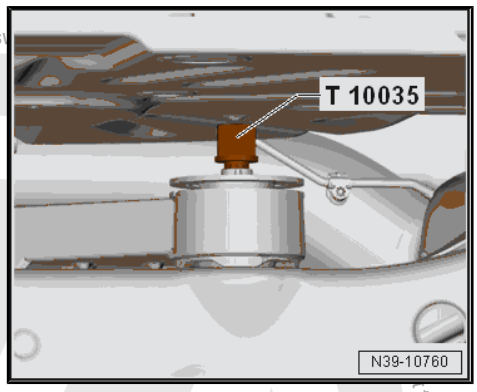

– Before removing, see if there is a marking (color dot) on the flexible disc and on the flange/final drive as well as on the flange/driveshaft -arrows-. If the dot is not there, mark the installed position of the flexible disc.

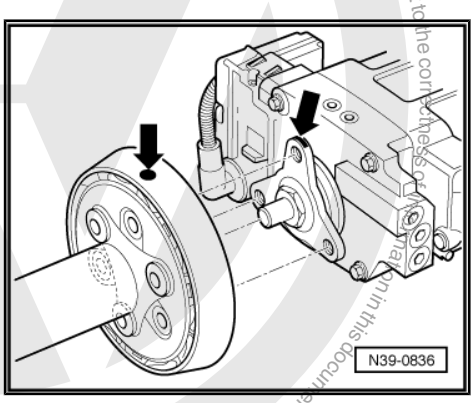

Protected by copyright. Copying for private or commercial purposes, in part or in whole, is not permitted unless authorised by Volkswagen AG. Volkswagen AG does not guarantee or accept any liability with respect to the correctness of information in this document. Copyright by Volkswagen AG.

– Remove the flexible disc with the vibration damper from the rear final drive -arrows-.

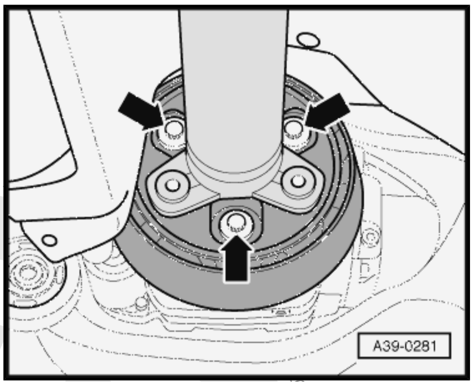

– Counterhold using Counterhold - Kit - Multiple Use - T10172- when loosening and tightening the bolts.

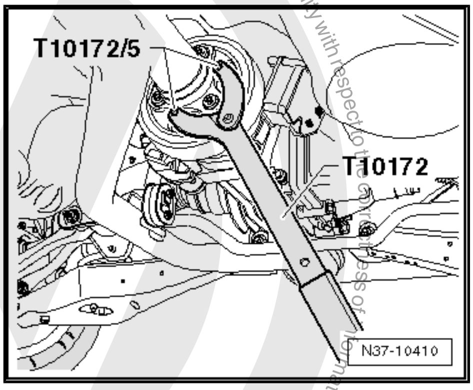

– Place the wood block -A- on the Engine and Gearbox Jack - VAS6931- and support the rear final drive.

– Remove the bolt -B- and the top washer -C- from the bracket.

Always replace the bolts.

– Push the final drive as far as possible to the rear.

– Remove the driveshaft from the final drive and lay it on the tunnel brace; place a cloth on the tunnel brace to protect the shaft.

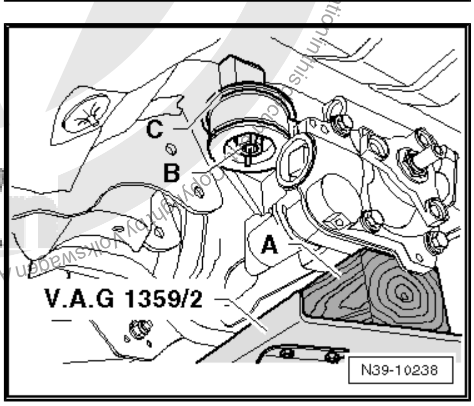

– When removing and installing the driveshaft, be careful not to damage the bushing -arrow-.

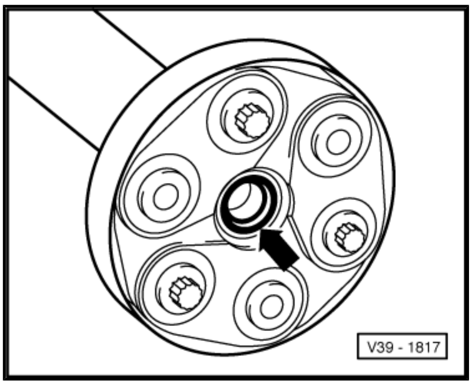

Protected by copyright. Copying for private or commercial purposes, in part or in whole, is not permitted unless authorised by Volkswagen AG. Volkswagen AG does not guarantee or accept any liability with respect to the correctness of information in this document. Copyright by Volkswagen AG.

– Position the final drive in the vehicle on an angle as shown in the illustration while lowering it at the same time.

– Secure final drive against falling down onto the universal support using the strap.

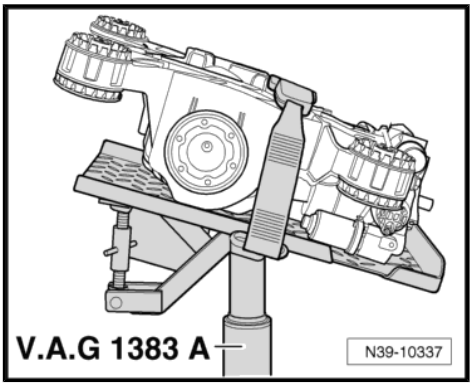

– Remove the connector -B- from the All Wheel Drive Control Module - J492- -A-. Ignore item -C-.

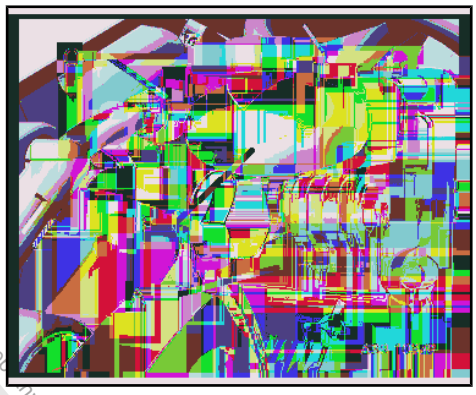

– Remove the ventilation lines -arrows- from the final drive.

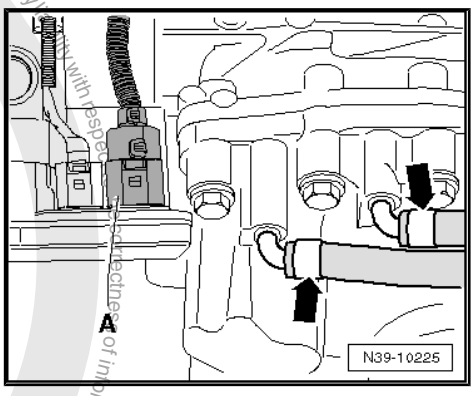

Note

Ignore item -A-.

– Guide the driveshaft -A- upward and support it in this position with a suitable piece of wood on the tunnel brace -1-.

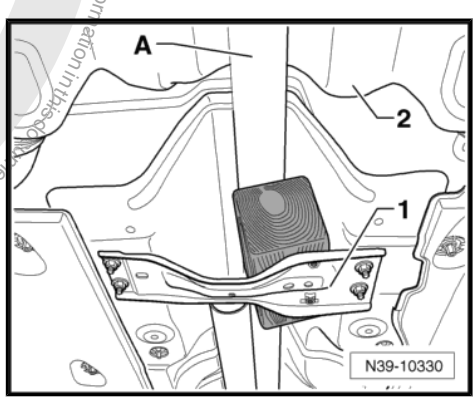

Note

Ignore item -2-.

– Pull the final drive “forward” when lowering, while doing this pay attention to make “clearance” to other components.

Installing

Install in reverse order of removal:

– Secure final drive against falling down with universal support strap.

Copyright by Volkswagen AG. Volkswagen AG does not guarantee or accept any liability with respect to the correctness of information in this document. Copying for private or commercial purposes, in part or in whole, is not permitted unless authorised by Volkswagen AG.

– Move the rear final drive to the illustrated position.

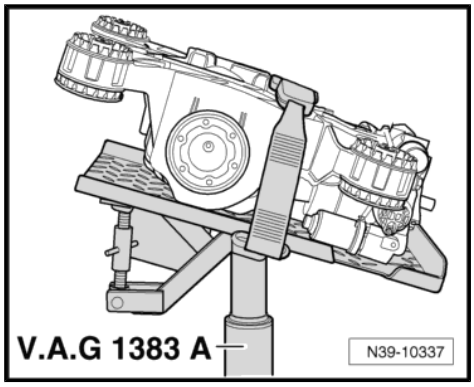

– Pay attention that the stop washers -B- are positioned on the rear bearing from above as shown. Correct placement prevents the gummy nipples -A- from falling or sliding out of the washer when installing.

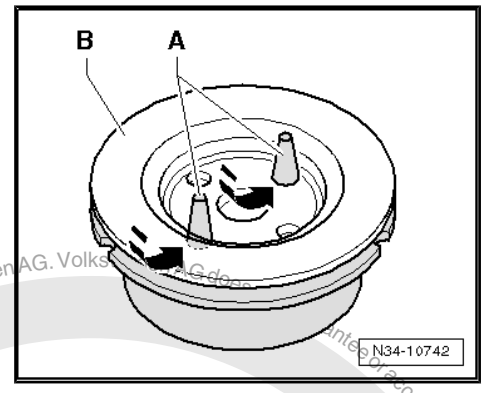

– Before installing the final drive, place the two new bolts in the rear bearing from above -arrows-.
– Lift the final drive and guide it over the rear axle. While lifting guide the driveshaft to the flange shaft.

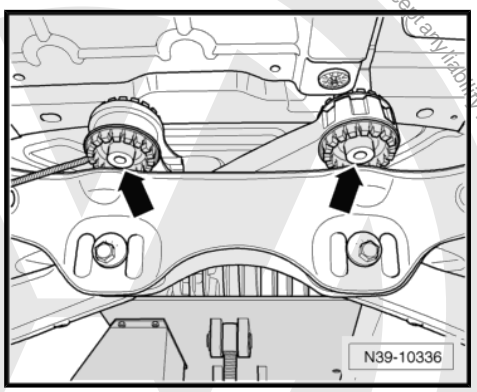

– Connect the vent lines -arrows- to the final drive vent pipes.
– Lift the final drive using the transmission jack into the installation position.
– Place a cloth on the tunnel brace and lay the driveshaft on it.
– Push the final drive as far as possible to the rear.

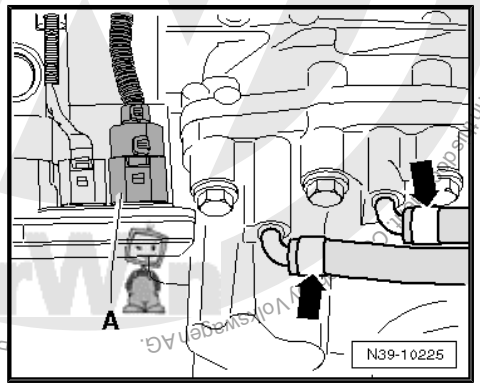

Protected by copyright. Copying for private or commercial purposes, in part or in whole, is not permitted unless authorised by Volkswagen AG. Volkswagen AG does not guarantee or accept any liability with respect to the correctness of information in this repair manual.

– Attach the driveshaft to the flange/driveshaft on the rear final drive so that the markings -arrows- line up. Install the bolts hand-tight at first.

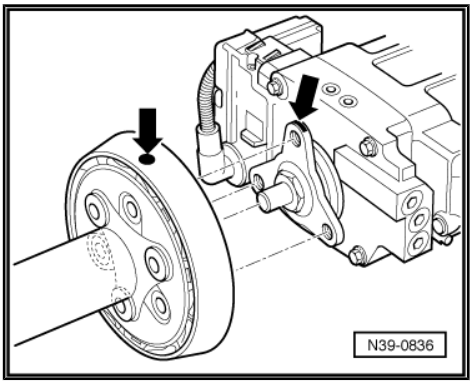

– When removing and installing the driveshaft, be careful not to damage the bushing -arrow-.

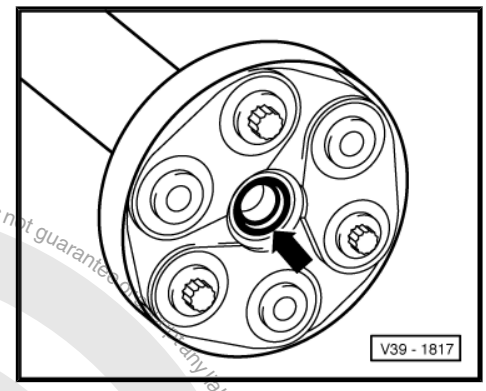

– Place washer -C- on the front driveshaft and faster hand tight with a new bolt -B-. Do not tighten the bolt yet.

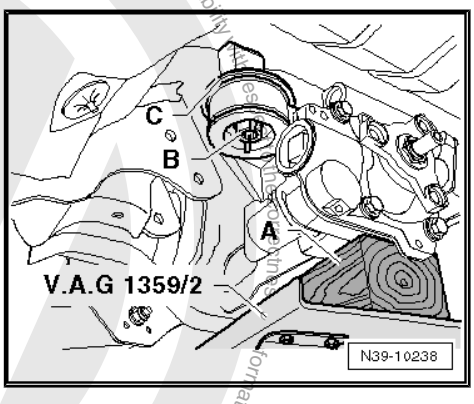

– Bolt the rear bolt for the final drive on the rear axle using the Multipoint Socket -T10035- . Tightening specification, refer to ⇒ Suspension, Wheels, Steering; Rep. Gr. 40 ; Subframe; Overview - Subframe .

– Bolt the rear axle on the body, refer to ⇒ Suspension, Wheels, Steering; Rep. Gr. 42 ; Rear Axle; Rear Axle, Removing and Installing .

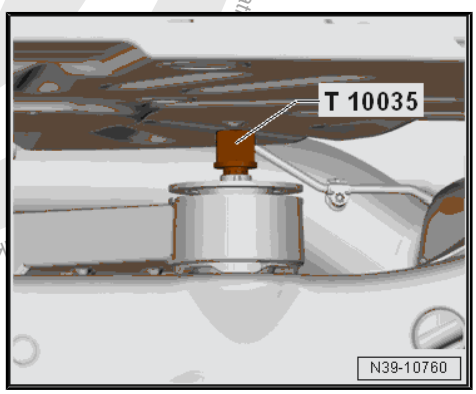

Protected by copyright. Copying for private or commercial purposes, in part or in whole, is not permitted unless authorised by Volkswagen AG. Volkswagen AG does not guarantee or accept any liability with respect to the correctness of information in this document. Copyright by Volkswagen AG.

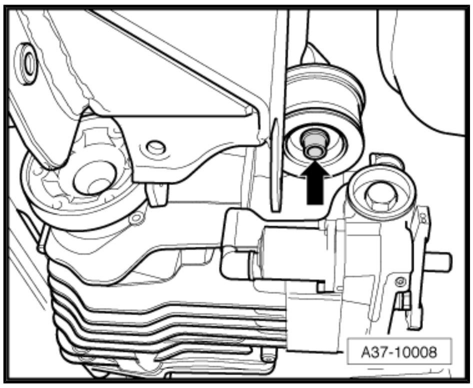

– Tighten the final drive from “underneath” -arrow-. Tightening specification, refer to ⇒ Suspension, Wheels, Steering; Rep. Gr. 40 ; Subframe; Overview - Subframe .

– Tighten the driveshaft. Tightening specification.

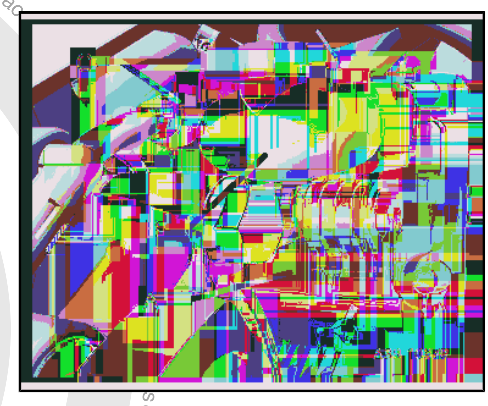

– Connect the connector -B- from the All Wheel Drive Control Module - J492- - A-. Ignore item -C-.

Note

For the next steps it is important that the multi-link axle springs are removed. This applies to the right and left side.

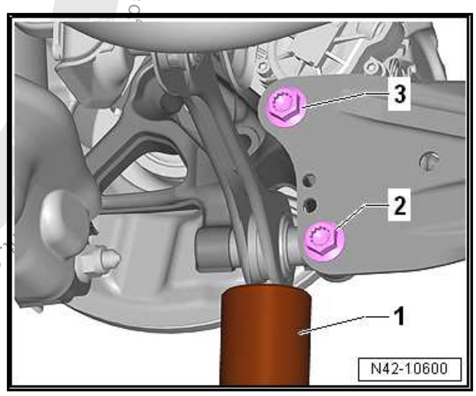

– Position the Engine and Gearbox Jack - VAS6931- -1- under the tie rod, and push upward until the driveshaft can be inserted in the final drive flange.

Note

Ignore items -2 and 3-.

– Tighten drive axles. Tightening specification, refer to ⇒ Suspension, Wheels, Steering; Rep. Gr. 42 ; Drive Axle; Drive Axle, Removing and Installing .

– Install the rear stabilizer bar, refer to ⇒ Suspension, Wheels, Steering; Rep. Gr. 42 ; Stabilizer Bar; Stabilizer Bar, Removing and Installing .

– Install the rear section of the exhaust system, refer to ⇒ Engine Mechanical, Fuel Injection and Ignition; Rep. Gr. 26 ; Exhaust Pipes/Mufflers; Overview - Muffler .

If final drive is replaced:

– Check fluid level in Haldex clutch, refer to ⇒ “7.1 Haldex Clutch Oil, Checking Level”, page 41 .

– Final Drive Fluid Level, Checking, refer to ⇒ “6.1 Gear Oil, Checking Level”, page 40 .

Protected by copyright. Copying for private or commercial purposes, in part or in whole, is not permitted unless authorised by Volkswagen AG. Volkswagen AG does not guarantee or ac... Copyright by Volkswagen AG.

4 Assembly Mounts

⇒ “4.1 Overview - Assembly Mounts”, page 27

⇒ “4.2 Subframe Mount, Removing and Installing”, page 28

4.1 Overview - Assembly Mounts

Note

Replace the bonded rubber bushings in “pairs” (upper and lower bushings).

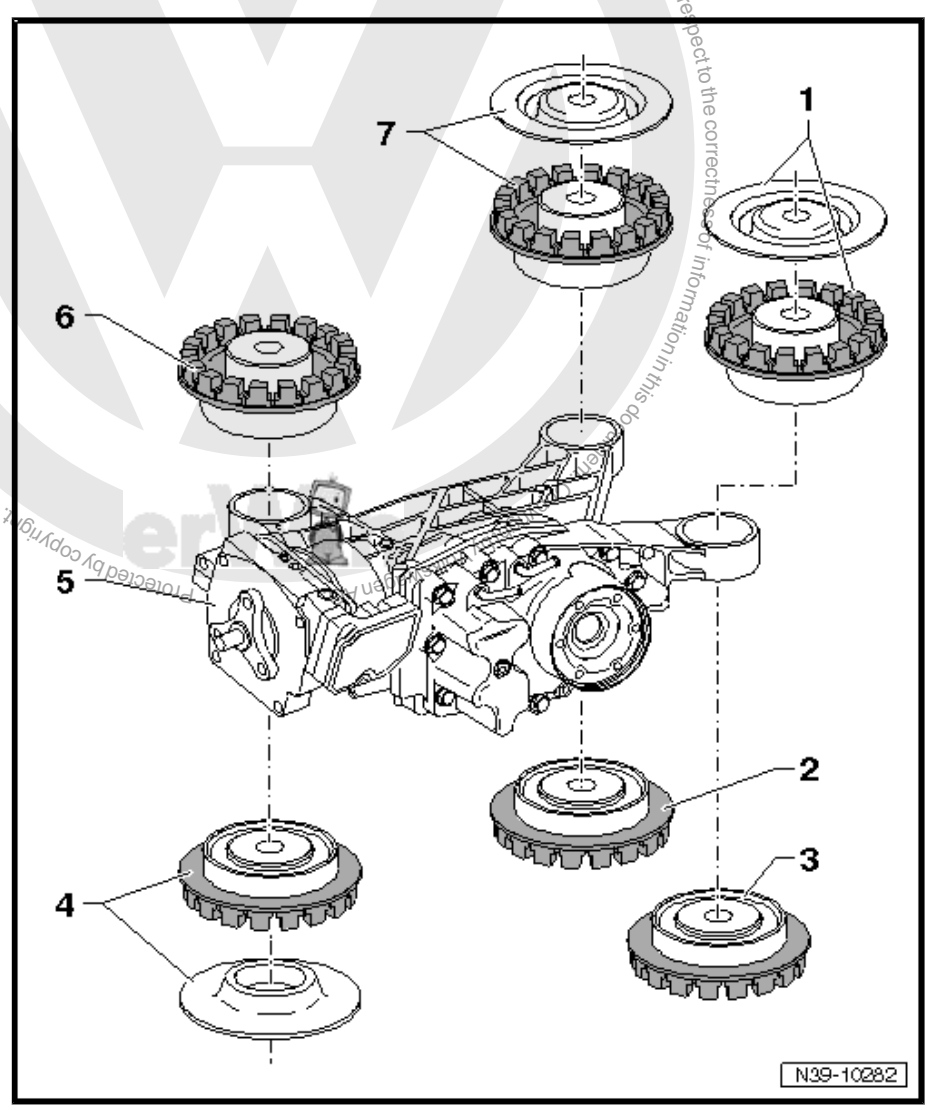

1 - “Upper Rear” Bonded Rubber Bushing

- ❑ With buffer
- ❑ Allocation, refer to the Parts Catalog
- ❑ Remove the buffer for removal and installation
- ❑ Removing and installing, refer to ⇒ “4.2 Subframe Mount, Removing and Installing”, page 28

2 - “Lower Rear” Bonded Rubber Bushing

- ❑ Without buffer
- ❑ Allocation, refer to the Parts Catalog
- ❑ Removing and installing, refer to ⇒ “4.2 Subframe Mount, Removing and Installing”, page 28

3 - “Lower Rear” Bonded Rubber Bushing

- ❑ Without buffer
- ❑ Allocation, refer to the Parts Catalog
- ❑ Removing and installing, refer to ⇒ “4.2 Subframe Mount, Removing and Installing”, page 28

4 - “Lower Front” Bonded Rubber Bushing

- ❑ With buffer
- ❑ Allocation, refer to the Parts Catalog
- ❑ Remove the buffer for removal and installation
- ❑ Removing and installing, refer to ⇒ “4.2 Subframe Mount, Removing and Installing”, page 28

5 - Rear Final Drive

- ❑ Remove to replace the bonded rubber bushing, refer to ⇒ “4.2 Subframe Mount, Removing and Installing”, page 28

6 - “Upper Front” Bonded Rubber Bushing

- ❑ Without buffer

Protected by copyright. Copying for private or commercial purposes, in whole or in part, is not permitted unless authorised by Volkswagen AG. Volkswagen AG does not guarantee or accept any liability with respect to the correctness of information in this document.

- ❑ Allocation, refer to the Parts Catalog
- ❑ Removing and installing, refer to ⇒ “4.2 Subframe Mount, Removing and Installing”, page 28

7 - “Upper Rear” Bonded Rubber Bushing

- ❑ With buffer
- ❑ Allocation, refer to the Parts Catalog
- ❑ remove the buffer for removal and installation
- ❑ Removing and installing, refer to ⇒ “4.2 Subframe Mount, Removing and Installing”, page 28

4.2 Subframe Mount, Removing and Installing

Special tools and workshop equipment required

- ♦ Thrust Piece3291/1 from the Bushing Tool Kit - 3291-
- ♦ Spindle from the Bushing Tool Set - 3292-
- ♦ Thrust pieces 3348 and 3348/1 from the Bearing Installer - Multiple Use - 3348-
- ♦ Puller - Kukko Internal - 46-56mm - 21/7- -1-
- ♦ Puller - Kukko Counterstay - 22/2- -4-

Removing

– Rear final drive, removing, refer to ⇒ “3.1 Final Drive, Removing and Installing”, page 20

Removing “Upper” Bearing

> **WARNING**
>
> *Wear safety gloves.*

To position the support :

– Break two pieces -arrows- out of the bearing collar.

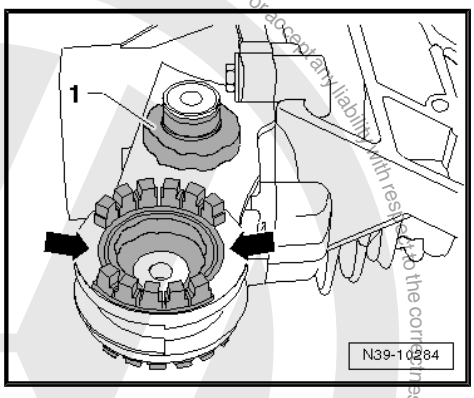

Protected by copyright. Copying for private or commercial purposes, in part or in whole, is not permitted unless authorised by Volkswagen AG. Volkswagen AG does not guarantee or accept any liability with respect to the correctness of information in this document. Copyright by Volkswagen AG.

– Remove the metal core -1-.

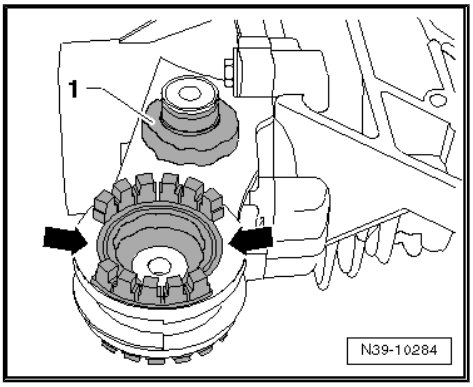

– Remove the bonded rubber bushing -1-.

A - Puller - Kukko Counterstay - 22/2-

B - Puller - Kukko Internal - 46-56mm - 21/7-

Driving Out "Lower" Bonded Rubber Bushing

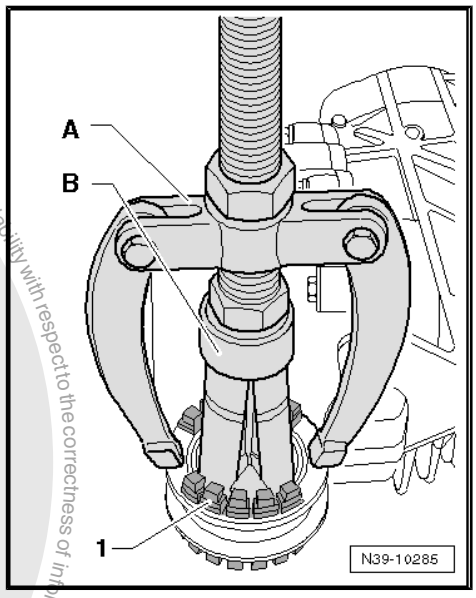

– Remove the bonded rubber bushing -1- with a Bearing Installer - Multiple Use - 3348- and plastic mallet.

Installing

Pulling in the "Lower" Bonded Rubber Bushing

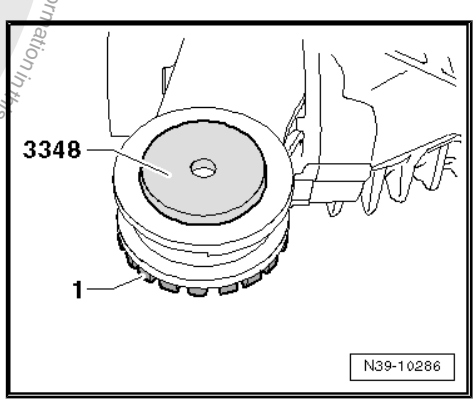

– Pull the bushing in until the collar makes contact with the final drive all the way around.

Pulling in the "Upper" Bonded Rubber Bushing

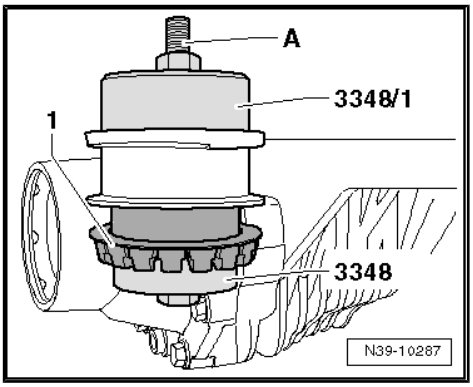

Protected by copyright. Copyright by Volkswagen AG.
Commercial purposes, in part or in whole, is not permitted unless authorised by Volkswagen AG. Volkswagen AG does not guarantee or accept any liability with respect to the correctness of information in this document.

– Pull the bushing in until the collar makes contact with the final drive all the way around.

– Install the plates, location, refer to
⇒ “4.1 Overview - Assembly Mounts”, page 27

– Rear final drive, installing, refer to
⇒ “3.1 Final Drive, Removing and Installing”, page 20

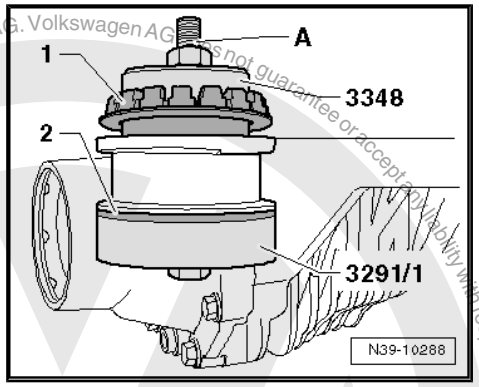

Protected by copyright. Copying for private or commercial purposes, in part or in whole, is not permitted unless authorised by Volkswagen AG. Volkswagen AG does not guarantee or accept any liability with respect to the correctness of information in this document. Copyright by Volkswagen AG.

5 Seals

⇒ “5.1 Seals Component Location Overview”, page 31

⇒ “5.2 Right Seal, Replacing”, page 32

⇒ “5.3 Left Seal, Replacing”, page 33

⇒ “5.4 Flange Shaft and Drive Axle Seal on Rear Final Drive, Replacing”, page 34

not permitted unless authorised by Volkswagen AG. Volkswagen AG does not guarantee or accept any liability with respect to the correctness of information in this

5.1 Seals Component Location Overview

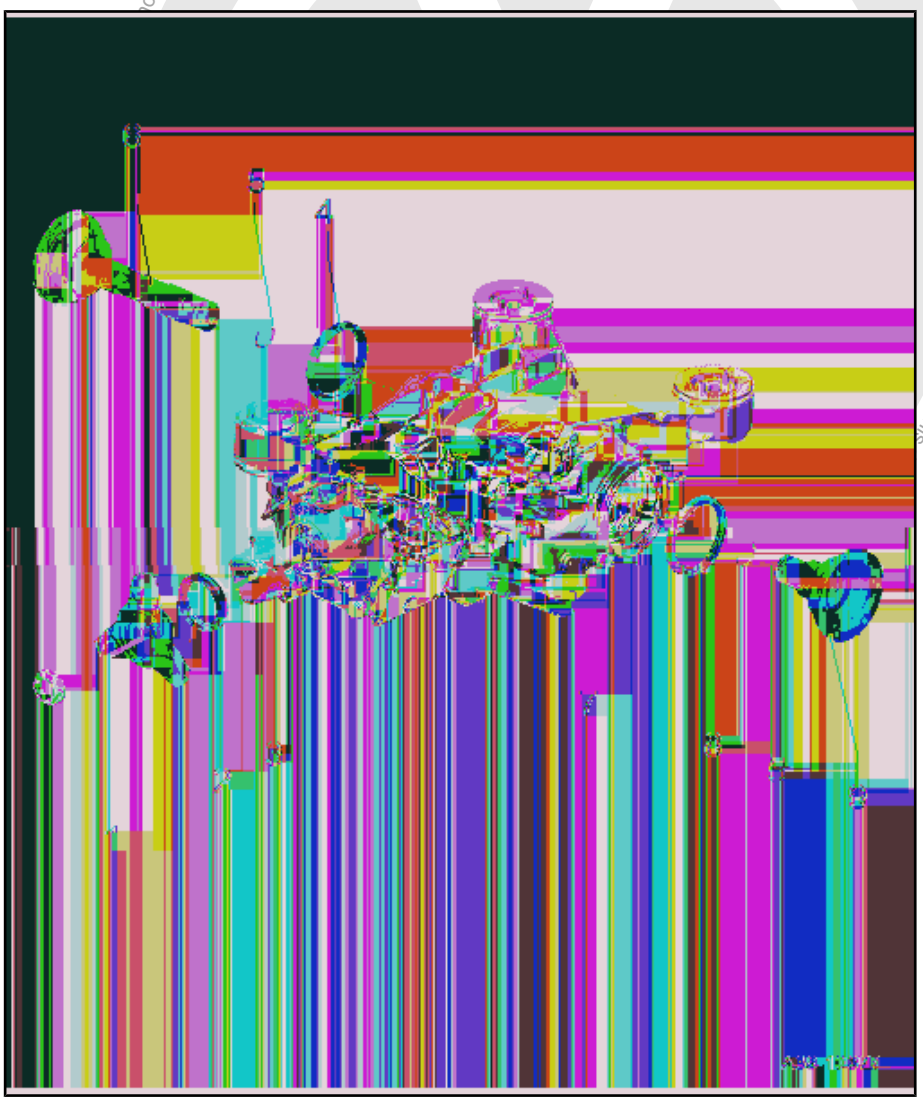

1 - Nut

- ❑ Secure using Locking Compound - D 000 600- .
- ❑ Tightening specification, refer to ⇒ “8.2 Haldex Clutch Overview”, page 44

2 - Driveshaft Flange

- ❑ Removing and installing, refer to ⇒ “5.4 Flange Shaft and Drive Axle Seal on Rear Final Drive, Replacing”, page 34

3 - Flange/Driveshaft Seal

Replacing, refer to ⇒ “5.4 Flange Shaft and Drive Axle Seal on Rear Final Drive, Replacing”, page 34

4 - Right Seal

- ❑ For the right flange shaft
- ❑ Replacing, refer to ⇒ “5.2 Right Seal, Replacing”, page 32

5 - Locking Ring

- ❑ Replace after removing flange shaft.

6 - Right Flange Shaft

7 - Rear Final Drive

8 - Left Seal

- ❑ For the left flange shaft
- ❑ Replacing, refer to ⇒ “5.3 Left Seal, Replacing”, page 33

9 - Left Flange Shaft

5.2 Right Seal, Replacing

⇒ “5.2.1 Right Seal, Replacing, Rear Final Drive 0CQ”, page 32

5.2.1 Right Seal, Replacing, Rear Final Drive 0CQ

Special tools and workshop equipment required

- Puller - Seal Lever - VW681-
- Slide Hammer Set - VW771-
- Transmission Support - Pins 34 - 3282/34-
- Seal Installer - Flange Shaft - 3305-
- -2- bridge from Puller - Kukko Puller - 50-110mm Width, 150mm Length - 18/0-
- Sealing Grease - G 052 128 A1-

Removing

– Remove the right drive axle, refer to ⇒ Suspension, Wheels, Steering; Rep. Gr. 42 ; Drive Axle; Drive Axle, Removing and Installing .

The following images show the left side of the final drive when removed. The procedure for the right is identical.

– Remove the spindles from the Puller - Kukko Puller - 50-110mm Width, 150mm Length - 18/0- bridge and install the Transmission Support - Pins 34 - 3282/34- in place of them.

– Attached the bridge -A- with two M8 x 30 bolts -arrows- to the flange shaft.

– Remove the flange shaft.

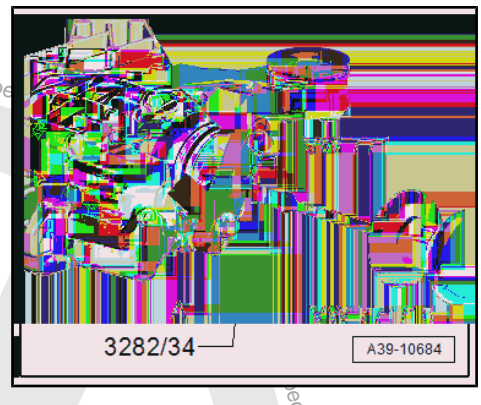

– Pry off flange shaft seal with the Puller - Seal Lever - VW681- .

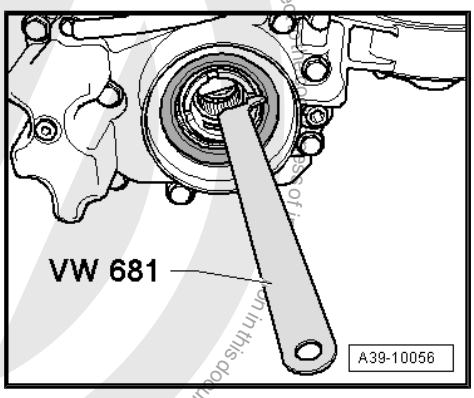

Installing

Protected by copyright. Copying for private or commercial purposes, in part or in whole, is not permitted unless authorised by Volkswagen AG. Copyright by Volkswagen AG.

– Lightly lubricate the outer diameter of the new sealing ring -1- and using the Seal Installer - Flange Shaft - T10049- drive in to the dimension -a- while doing this do not bend the seal.

- Dimension -a- = 4.8 ± 0.1 mm; Measured from the housing flat surface to seal.
- Do not drive in the seal until stop.
- Maintain a parallel of maximum 0.25 mm between the seal -1- to the housing flat surface.

– Fill the space between the sealing and dust lip halfway with Sealing Grease - G 052 128 A1- .

Replacing Locking Ring

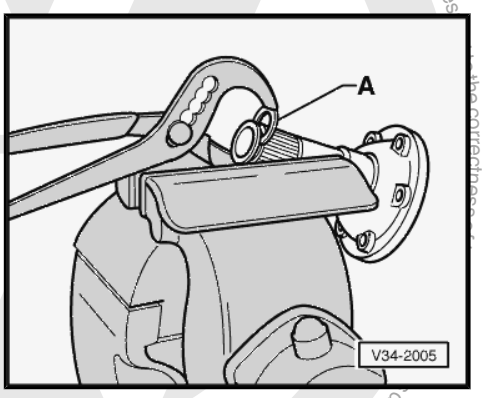

– Clamp the flange shaft in a vise with jaw protectors.

– Use the new circlip -A- to press the previous circlip out of the flange shaft groove.

– Install the flange shaft using a plastic hammer and a drift.

– Install the drive axle, refer to ⇒ Suspension, Wheels, Steering; Rep. Gr. 42 ; Drive Axle; Drive Axle, Removing and Installing .

– Check the gear oil level in the rear final drive, refer to ⇒ “6.1 Gear Oil, Checking Level” page 40 .

5.3 Left Seal, Replacing

⇒ “5.3.1 Left Seal, Replacing, Rear Final Drive 0CQ”, page 33

5.3.1 Left Seal, Replacing, Rear Final Drive 0CQ

Special tools and workshop equipment required

- ♦ Puller - Seal Lever - VW681-
- ♦ Slide Hammer Set - VW771-
- ♦ Transmission Support - Pins 34 - 3282/34-
- ♦ Seal Installer - Flange Shaft - 3305-
- ♦ -2- bridge from Puller - Kukko Puller - 50-110mm Width, 150mm Length - 18/0-
- ♦ Sealing Grease - G 052 128 A1-

Removing

– Remove the left drive axle, refer to ⇒ Suspension, Wheels, Steering; Rep. Gr. 42 ; Drive Axle; Drive Axle, Removing and Installing .

The following illustrations show the final drive when removed.

Protected by copyright. Copying for private or commercial purposes in part or in whole, is not permitted unless authorised by Volkswagen AG. Volkswagen AG does not guarantee the correctness of this document. Copyright by Volkswagen AG.

– Remove the spindles from the Puller - Kukko Puller - 50-110mm Width, 150mm Length - 18/0- bridge and install the Transmission Support - Pins 34 - 3282/34- in place of them.

– Attached the bridge -A- with two M8 x 30 bolts -arrows- to the flange shaft.

– Remove the flange shaft.

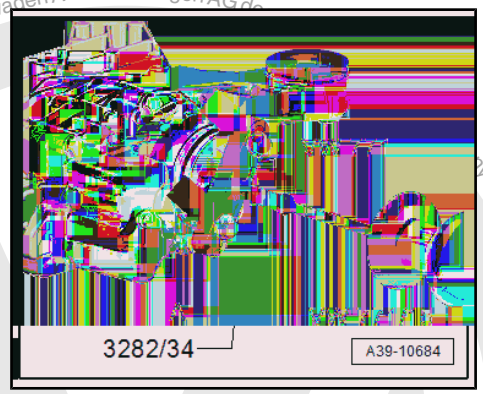

– Pry off flange shaft seal with the Puller - Seal Lever - VW681- .

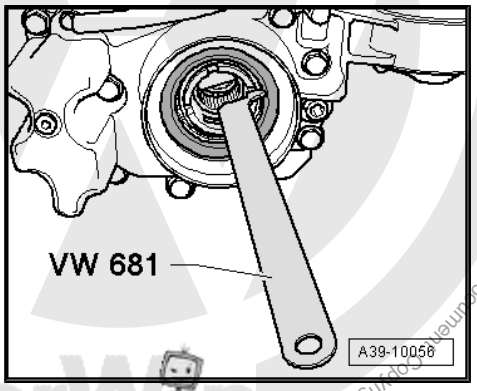

Installing

– Lightly lubricate the outer diameter of the new sealing ring -1- and using the Seal Installer - Flange Shaft - T10049- drive in to the dimension -a- while doing this do not bend the seal.

• Dimension -a- = 4.8 ± 0.1 mm; Measured from the housing flat surface to seal.

• Do not drive in the seal until stop.

• Maintain a parallel of maximum 0.25 mm between the seal -1- to the housing flat surface.

– Fill the space between the sealing and dust lip halfway with Sealing Grease - G 052 128 A1- .

Replacing Locking Ring

– Clamp the flange shaft in a vise with jaw protectors.

– Use the new circlip -A- to press the previous circlip out of the flange shaft groove.

– Install the flange shaft using a plastic hammer and a drift.

– Install the drive axle, refer to ⇒ Suspension, Wheels, Steering; Rep. Gr. 42 ; Drive Axle; Drive Axle, Removing and Installing .

– Check the gear oil level in the rear final drive, refer to ⇒ “6.1 Gear Oil, Checking Level”, page 40 .

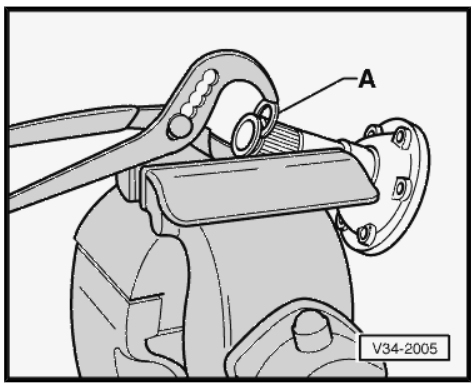

5.4 Flange Shaft and Drive Axle Seal on Rear Final Drive, Replacing

Special tools and workshop equipment required

♦ Puller - Seal Lever - VW681-

♦ Drive Sleeve - 30-20-

- Counterhold - Crankshaft Sprocket - 3415-
- Seal Installer - Shaft Seal Ring - T10019-
- Puller - Kukko 3 Jaw - 100x100mm - Kukko 12/1-
- Torque Wrench 1601 - VAG1601-
- Tensioning Strap - T10038-
- Engine and Gearbox Jack - VAS6931-
- Counterhold - Kit - Multiple Use - T10172-
- Locking Compound - D 000 600-
- Bolt M10 x 25
- Socket hex head screw M8 x 15

Removing

– Remove the noise insulation, refer to ⇒ Body Exterior; Rep. Gr. 66 ; Noise Insulation; Overview - Noise Insulation .

– Support the front part of the exhaust system using the Engine and Gearbox Jack - VAS6931- .

– Separate the exhaust system at the clamping sleeve -arrows- and remove the rear section of the exhaust system, refer to ⇒ Engine Mechanical, Fuel Injection and Ignition; Rep. Gr. 26 ; Exhaust Pipes/Mufflers; Overview - Muffler .

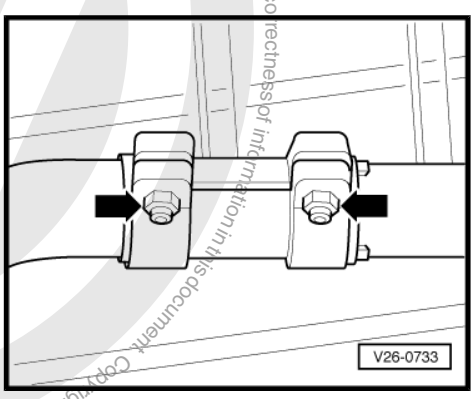

Note

Do not bend the exhaust system decoupling element more than 10° or it could be damaged.

– Remove the pendulum support bolts -1 and 2-.

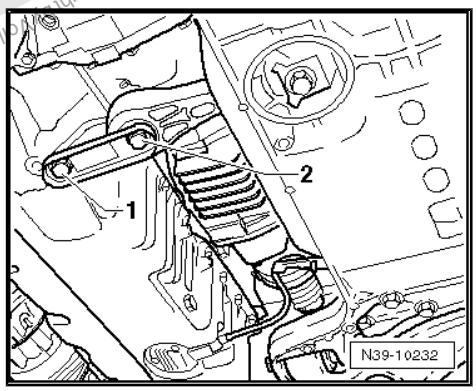

– Press the “engine and transmission” forward slightly and secure it with a suitable piece of wood -A-.

– Remove the center tunnel heat shield under the intermediate bearing, refer to ⇒ Body Exterior; Rep. Gr. 66 ; Underbody Panel; Overview - Underbody Trim Panels .

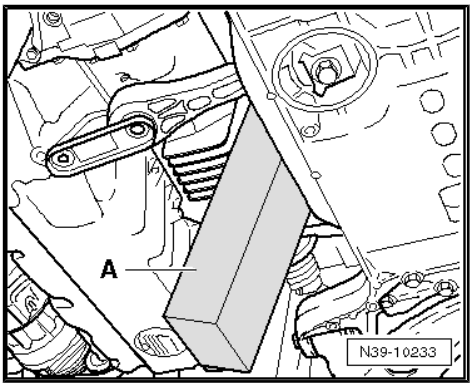

Protected by copyright. Copying for private or commercial purposes, in part or in whole, is not permitted unless authorised by Volkswagen AG. Volkswagen AG does not guarantee or accept any liability with respect to the correctness of information in this document. Copyright by Volkswagen AG.

– Remove the rear driveshaft from the final drive -arrows-.

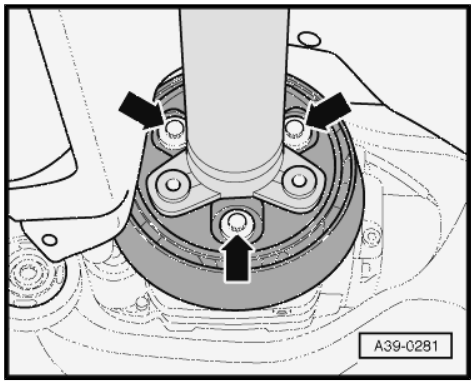

– Counterhold using Counterhold - Kit - Multiple Use - T10172- when loosening and tightening the bolts.

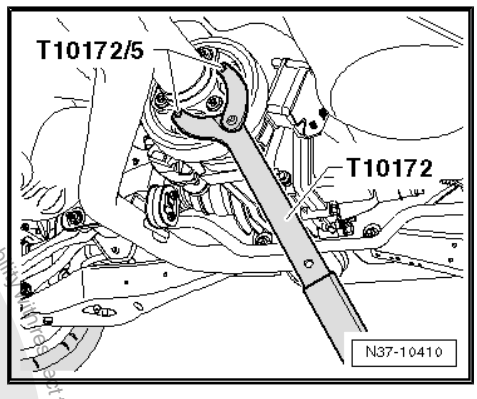

– Remove the bolts -arrows- from the intermediate bearing.
– Remove the driveshaft from the final drive and lay it on the tunnel brace; place a cloth on the tunnel brace to protect the shaft.

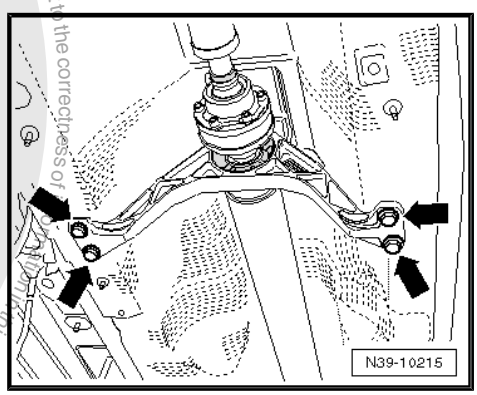

– When removing and installing the driveshaft, be careful not to damage the bushing -arrow-.

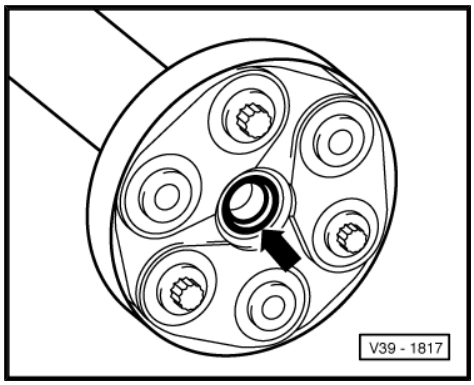

Protected by copyright. Copying for private or commercial purposes, in part or in whole, is not permitted unless authorised by Volkswagen AG. Volkswagen AG does not guarantee or accept any liability with respect to the correctness of information in this document. Copyright by Volkswagen AG.

– Secure the intermediate bearing to the body with two bolts to avoid placing a load on the front flexible disc unnecessarily.

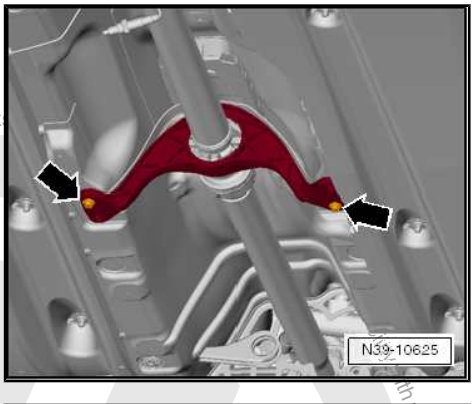

– Tie the vehicle to the hoist with Tensioning Strap - T10038- .

> **WARNING**
>
> ***If the vehicle is not secured, there is the risk that it could slip from the hoist.***

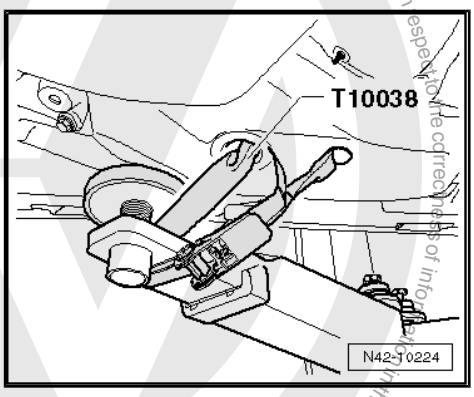

– Remove the flange/driveshaft hex nut.

A - M10 x 25 Bolts

B - M8 x 15 Bolt (installed in the Counterhold - Crankshaft Sprocket - 3415- from the rear)

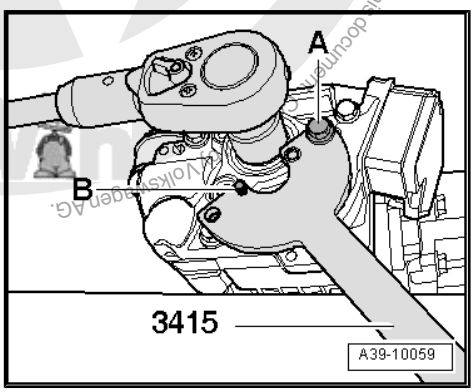

– Remove the flange/driveshaft. If difficult use the Puller - Kukko 3 Jaw - 100x100mm - 12/1- .

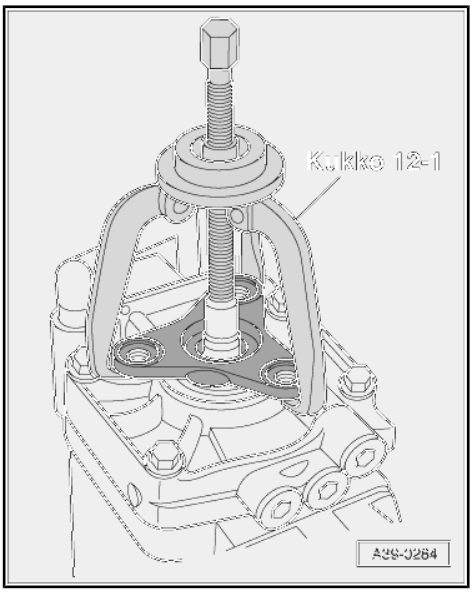

Protected by copyright. Copying for private or commercial purposes, in part or in whole, is not permitted unless authorised by Volkswagen AG. Volkswagen AG.

– Remove the seal using the Puller - Seal Lever - VW681- .

Installing

– Before installation, lightly coat the new sealing ring with the Haldex Clutch High Performance Oil on the outside circumference and between the sealing lips.

– Drive in the new sealing ring to the stop using the Seal Installer - Shaft Seal Ring - T10019- . Do not tilt the seal when doing this.

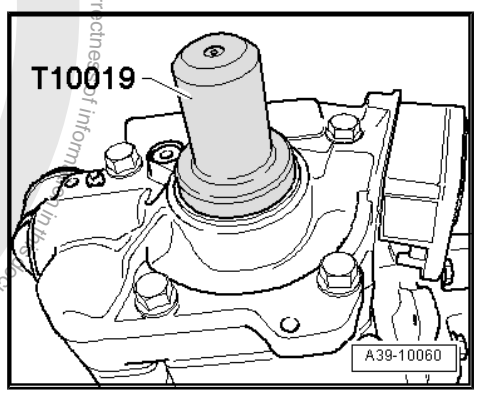

– Install the flange/driveshaft using the Drive Sleeve - 30 - 20- .

– Install and tighten new hex nuts using Locking Compound - D 000 600- .

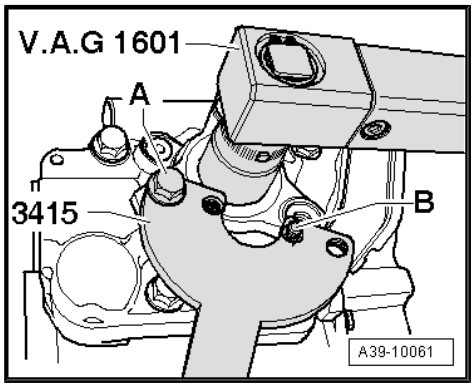

Tightening Specification, refer to
⇒ “8.2 Haldex Clutch Overview”, page 44 .

A - M10 x 20 Bolts

B - M8 x 15 Bolt (installed in the Counterhold - Crankshaft Sprocket - 3415- from the rear)

Install in reverse order of removal. Note the following:

– Install all parts marked to each other in original positions.

Install the Intermediate Bearing without Tension.

– Align the intermediate bearing in its elongated holes so the driveshaft or bearing is not under stress.

– Tighten the intermediate bearing only after the driveshaft has been attached.

– Tighten the driveshaft and intermediate bearing. Tightening specifications, refer to ⇒ “2.1 Driveshaft Overview”, page 9 .

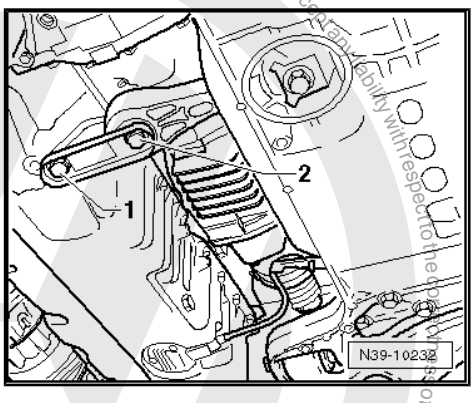

- Tighten the pendulum support with “new” bolts. Tightening specifications, refer to ⇒ Suspension, Wheels, Steering; Rep. Gr. 42 ; Subframe; Overview - Subframe .
- Install the center tunnel heat shield under the intermediate bearing, refer to ⇒ Body Exterior; Rep. Gr. 66 ; Underbody Panel; Overview - Underbody Trim Panels .
- Install the rear section of the exhaust system, refer to ⇒ Engine Mechanical, Fuel Injection and Ignition; Rep. Gr. 26 ; Exhaust Pipes/Mufflers; Overview - Muffler .
- Install the noise insulation, refer to ⇒ Body Exterior; Rep. Gr. 66 ; Noise Insulation; Overview - Noise Insulation .
- Check oil level in Haldex clutch, refer to ⇒ “7 High-Performance Haldex Clutch Oil”, page 41 .

Protected by copyright. Copying for private or commercial purposes, in part or in whole, is not permitted unless authorised by Volkswagen AG. Volkswagen AG does not guarantee or accept any liability with respect to the correctness of information in this document. Copyright by Volkswagen AG.

6 Gear Oil

⇒ “6.1 Gear Oil, Checking Level”, page 40

6.1 Gear Oil, Checking Level

Special tools and workshop equipment required

- Torque Wrench 5-50Nm - VAG1331-
- Charging Device For Haldex Coupling 2 - VAS6291A-
- Oil Filler - Adapter 2 - VAS6262/2-

Test Requirement

- The vehicle is level and all hoist supports are the same height.

Checking the Oil Level

– Place the Shop Crane - Drip Tray - VAS6208- under the final drive.

The oil inspection plug is located on the rear final drive and visible on the left side in the direction of travel.

– Remove the plug -arrow-.

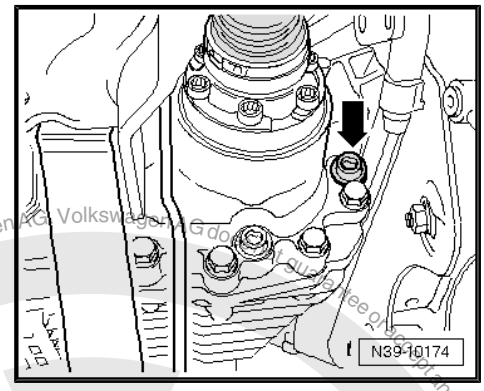

The oil level is correct when the rear final drive is filled up to the lower edge of the filler hole.

– Install the plug -arrow- and tighten. Tightening specification 15 Nm.

Filling the Oil

– Install the Oil Filler - Adapter 2 - VAS6262/2- hand tight in the check hole.

– Add enough oil using Charging Device For Haldex Coupling 2 - VAS6291A- until it runs out between the adapter on the charging device and the transmission housing.

Gear Oil for the rear final drive, refer to the Parts Catalog.

– Remove the filler tool and adapter; a little oil left over will run out.

The oil level is correct when the rear final drive is filled up to the lower edge of the filler hole.

– Install the plug -arrow- and tighten. Tightening specification 15 Nm.

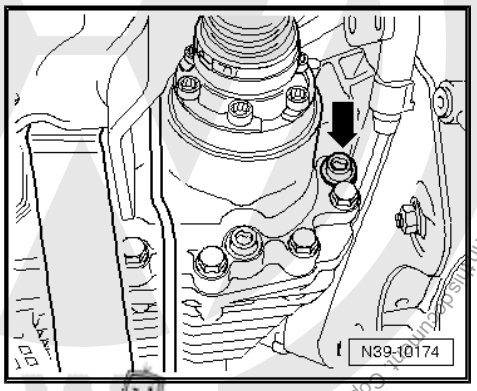

Protected by copyright. Copying for private or commercial purposes, in part or in whole, is not permitted unless authorised by Volkswagen AG. Volkswagen AG does not guarantee or accept any liability with respect to the correctness of information in this document. Copyright by Volkswagen AG.

Protected by copyright. Copying for private or commercial purposes, in part or in whole, is not permitted unless authorised by Volkswagen AG. Volkswagen AG does not guarantee or accept any liability with respect to the correctness of information in this document. Copyright by Volkswagen AG.

7 High-Performance Haldex Clutch Oil

⇒ “7.1 Haldex Clutch Oil, Checking Level”, page 41

⇒ “7.2 High-Performance Haldex Clutch Oil, Draining and Filling”, page 42

7.1 Haldex Clutch Oil, Checking Level

High-Performance Fluid for the Haldex Clutch , refer to the Parts Catalog.

Special tools and workshop equipment required

- ♦ Vehicle Diagnostic Tester
- ♦ Shop Crane - Drip Tray - VAS6208-

Test Prerequisites

- Oil temperature must be 20 to 40 °C (68 to 104 °F).
- The vehicle must be horizontal.
- Final drive must be in installation position to check oil level.
- – Read the oil temperature, refer to Vehicle Diagnostic Tester Guided Functions.

Enter “Guided Fault Finding”:

- – Turn on the ignition.
- – Touch the “Guided Functions” field/button.
- – Select one after another on the tester:
- ♦ Brand
- ♦ Type
- ♦ Model year
- ♦ Version
- ♦ Engine codes
- ♦ Confirm the entered data.
- ♦ 22 - AWD electronics
- ♦ 22 - Read the measured values block
- ♦ Oil temperature
- – Read the oil temperature.
- The oil temperature must be 20 to 40 °C (68 to 104 °F)..

Checking Oil Level

- – Remove the oil filler plug -arrow-. (Shown with final drive removed for the sake of clarity).

The oil level is correct if the Haldex clutch is filled to the lower edge of the oil filler hole or up to 3 mm below the oil filler hole.

- – Tighten the bolt -arrow- to 15 Nm.
- – Add oil if the oil level is not correct, refer to ⇒ “7.2 High-Performance Haldex Clutch Oil, Draining and Filling”, page 42 .

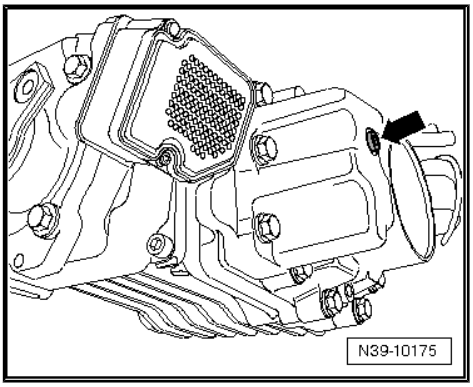

7.2 High-Performance Haldex Clutch Oil, Draining and Filling

Special tools and workshop equipment required

- ♦ Torque Wrench 5-50Nm - VAG1331-
- ♦ Used Oil Collection and Extraction Unit - SMN372500-
- ♦ Charging Device For Haldex Coupling 2 - VAS6291A-
- ♦ Oil Filler - Adapter 2 - VAS6262/2-

Draining Oil

- The vehicle must be horizontal.

– Place the Used Oil Collection and Extraction Unit - SMN372500- under the final drive.

– Remove the drain plug -A- and drain all the High Performance Haldex Clutch Oil .

– Install the drain plug -A- with the new sealing ring and tighten to 30 Nm.

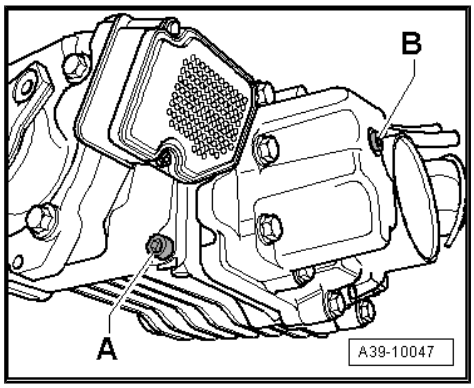

Filling Oil

– Remove the filler plug -B-. (Shown with final drive removed for better illustration).

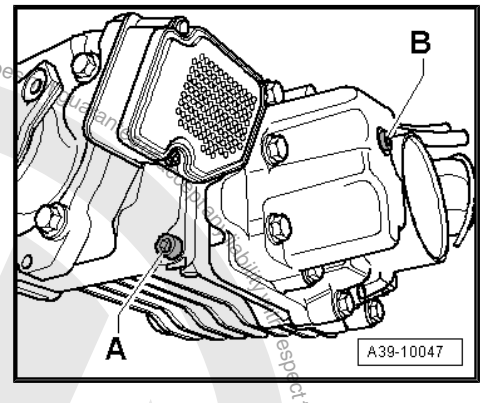

Protected by copyright. Copying for private or commercial purposes, in part or in whole, is not permitted unless authorised by Volkswagen AG. Volkswagen AG does not guarantee or accept any liability with respect to the correctness of information in this document. Copyright by Volkswagen AG.

– Install the Oil Filler - Adapter 2 - VAS6262/2- -A- until stop.
– Lock the elbow -B- with the adapter -A-.
– Add enough oil using Charging Device For Haldex Coupling 2 - VAS6291A- until it runs out between the adapter on the charging device and the transmission housing.
– Remove the filler tool and adapter; a little oil left over will run out.

The oil level is correct when the Haldex clutch is filled up to the lower edge of the oil fill hole.

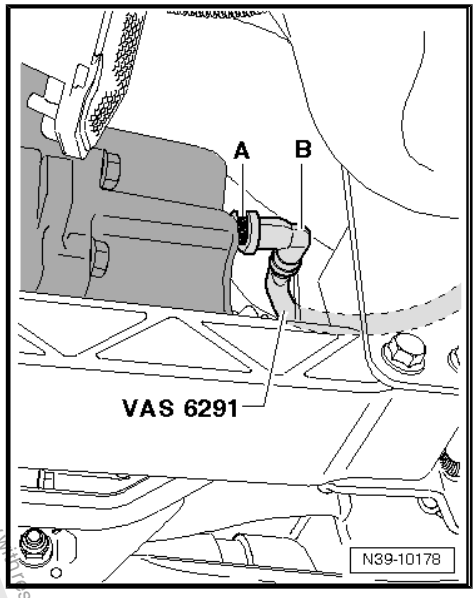

– Install the plug -arrow- and tighten. Tightening specification 15 Nm

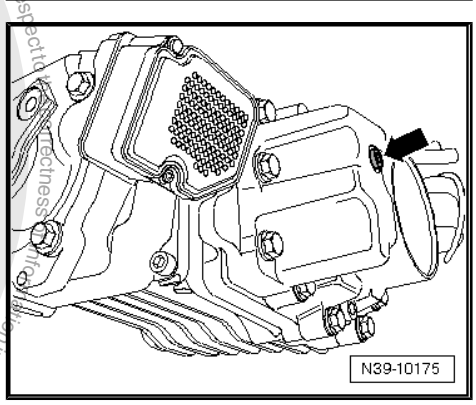

Protected by copyright. Copying for private or commercial purposes, in part or in whole, is not permitted unless authorised by Volkswagen AG. Volkswagen AG does not guarantee or accept any liability with respect to the correctness of information in this document. Copyright by Volkswagen AG.

8 Haldex Clutch

⇒ “8.1 Function, Checking”, page 44

⇒ “8.2 Haldex Clutch Overview”, page 44

⇒ “8.3 Haldex Clutch Pump V181 Removing and Installing”, page 46

⇒ “8.4 Haldex Clutch, Removing and Installing”, page 48

⇒ “8.5 All Wheel Drive Control Module J492 , Removing and Installing”, page 52

8.1 Function, Checking

Note

Check the Haldex clutch during a test drive using Vehicle Diagnostic Tester .

WARNING

To prevent possible injury when performing measuring tests or test drives, refer to *⇒ “4 Safety Precautions”, page 5* *.*

– Check the function, refer to Vehicle Diagnostic Tester `Guided Functions`.

Enter “Guided Fault Finding”:

– Turn on the ignition.

– Touch the “Guided Functions” field/button.

– Select one after another on the tester:

♦ Brand

♦ Type

♦ Model year

♦ Version

♦ Engine codes

♦ Confirm the information entered.

♦ 22 - AWD electronics

♦ 22 - Output Diagnostic Test Mode

– Start the output diagnostic test mode and follow the instructions on the tester.

8.2 Haldex Clutch Overview

⇒ “8.2.1 Haldex Clutch Overview, Generation V”, page 44

8.2.1 Haldex Clutch Overview, Generation V

The Haldex clutch can be removed and installed with the rear final drive still installed.

Protected by copyright. Copying for private or commercial purposes, in part or in whole, is not permitted unless authorised by Volkswagen AG. Volkswagen AG does not guarantee or accept any liability with respect to the correctness of information in this document. Copyright by Volkswagen AG.

authorised by Volkswagen AG. Volkswagen AG does not guarantee or assume any liability with respect to the correctness of information in this document

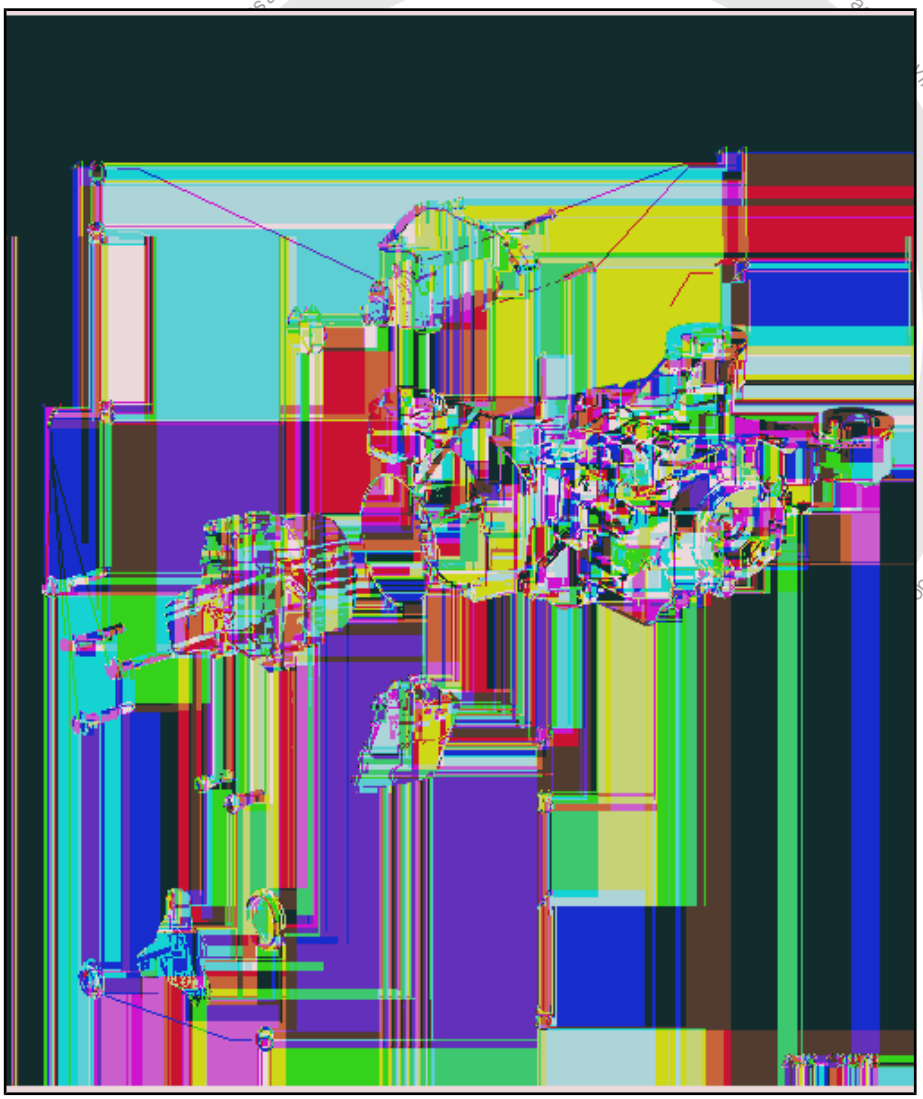

1 - O-Ring

- ❑ Coat with High Performance Haldex Clutch Oil and insert
- ❑ After removing replace the Haldex Clutch

2 - All Wheel Drive Control Module - J492-

- ❑ Removing and installing, refer to ⇒ "8.5 All Wheel Drive Control Module J492 , Removing and Installing", page 52

3 - Bolts

- ❑ 9.5 ± 0.5 Nm
- ❑ Quantity: 2

4 - Flange/Driveshaft Seal

Replacing, refer to ⇒ "5.4 Flange Shaft and Drive Axle Seal on Rear Final Drive, Replacing", page 34

5 - Flange/Driveshaft

- ❑ Removing and installing, refer to ⇒ "5.4 Flange Shaft and Drive Axle Seal on Rear Final Drive, Replacing", page 34

6 - Nut

- ❑ 210 Nm
- ❑ Replace after removing
- ❑ Secure using Locking Compound - D 000 600- .

7 - Bolts

- ❑ 50 Nm
- ❑ Quantity: 4

8 - Haldex Clutch Housing

- ❑ Haldex clutch, removing and installing, refer to ⇒ "8.4 Haldex Clutch, Removing and Installing", page 48

9 - O-Ring

- ❑ Quantity: 2
- ❑ Diameter 43.5 mm
- ❑ For Haldex Clutch Pump - V181-
- ❑ Coat with High Performance Haldex Clutch Oil and insert
- ❑ Always replace.

10 - Haldex Clutch Pump - V181-

- ❑ Removing and installing, refer to ⇒ "8.3 Haldex Clutch Pump V181 Removing and Installing", page 46

11 - Bolt

- ❑ 9.5 ± 0.5 Nm
- ❑ Quantity: 2

12 - Rear Final Drive

❑ Removing and installing, refer to ⇒ “3.1 Final Drive, Removing and Installing”, page 20

8.3 Haldex Clutch Pump - V181- Removing and Installing

⇒ “8.3.1 Haldex Clutch Pump V181 , Removing and Installing, Generation V”, page 46

8.3.1 Haldex Clutch Pump - V181- , Removing and Installing, Generation V

Special tools and workshop equipment required

♦ Used Oil Collection and Extraction Unit - SMN372500-

Removing

– Turn off the ignition.

– Place the Used Oil Collection and Extraction Unit - SMN372500- under rear the final drive.

– Remove the drain plug -A- and completely drain the High Performance Haldex Clutch Oil .

– Install the drain plug -A- with the new sealing ring and tighten to 30 Nm.

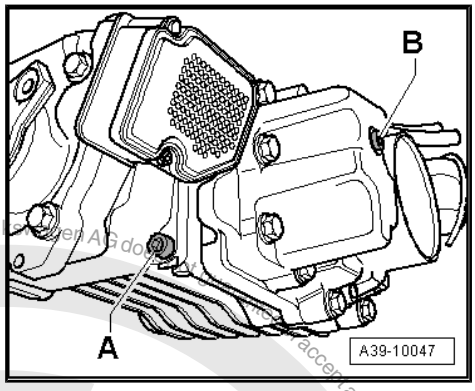

– Remove the connector -arrow- for the Haldex Clutch Pump - V181- from the All Wheel Drive Control Module - J492- .

Protected by copyright. Copying for private or commercial purposes, in part or in whole, is not permitted unless authorised by Volkswagen AG. Volkswagen AG does not guarantee or accept any liability with respect to the correctness of information in this document. Copyright by Volkswagen AG.

– Unclip and free up the wiring harness -3- for the Haldex Clutch Pump - V181- from the housing.

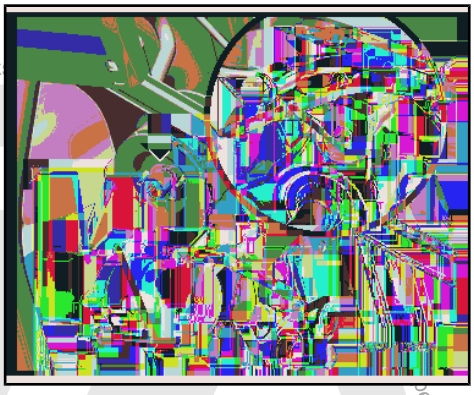

Note

Ignore the bolt -arrow-.

– Place the Used Oil Collection and Extraction Unit - SMN372500- under rear the final drive.

– Remove the bolt -1- from the Haldex Clutch Pump - V181- .

– Remove the Haldex Clutch Pump - V181- -2- from the Haldex clutch housing.

Installing

Install in reverse order of removal. Note the following:

– If the removed Haldex Clutch Pump - V181- is being installed again, replace the O-rings -1- and 2-.

– Lightly coat the O-rings -1- and 2- with High Performance Haldex Clutch Oil .

– Press the Haldex Clutch Pump - V181- -2- until stop in the Haldex clutch housing. Make sure the wiring harness -3- is routed correctly.

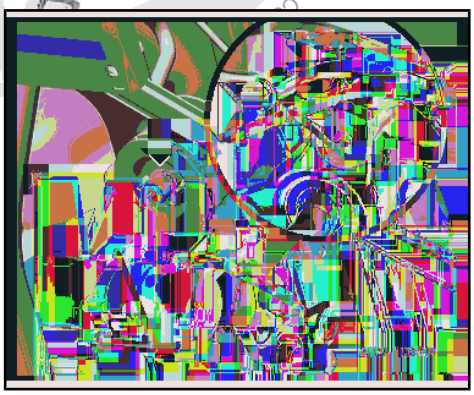

Note

Ignore the bolt -arrow-.

– Tighten the bolts -1-.

– Connect the connector -arrow- for the Haldex Clutch Pump - V181- to the All Wheel Drive Control Module - J492- .

– Add High Performance Haldex Clutch Oil and check the oil level in the Haldex clutch, refer to
⇒ “7 High-Performance Haldex Clutch Oil”, page 41 .

Tightening specifications

♦ Refer to Haldex Clutch Pump to Haldex clutch, refer to item -11- ⇒ Item 11 (page 45) .

♦ Drain plug for High performance oil for Haldex clutch , refer to
⇒ “7 High-Performance Haldex Clutch Oil”, page 41 .

Protected by copyright. Copying for private or commercial purposes, in part or in whole, is not permitted unless authorised by Volkswagen AG. Volk

8.4 Haldex Clutch, Removing and Installing

⇒ "8.4.1 Haldex Clutch, Removing and Installing, Generation V", page 48

8.4.1 Haldex Clutch, Removing and Installing, Generation V

Special tools and workshop equipment required

- Guide Pins - T10093-
- Counterhold - Kit - Multiple Use - T10172A- with Counterhold - Kit - Adapter 5 - T10172/5-
- Used Oil Collection and Extraction Unit - SMN372500-

Removing

> **Caution**
>
> *There is a danger of causing damage to the decoupling element.*
>
> - *Do not bend the decoupling element more than 10°.*
> - *Do not load the decoupling element.*
> - *Do not damage the wire mesh on the decoupling element.*

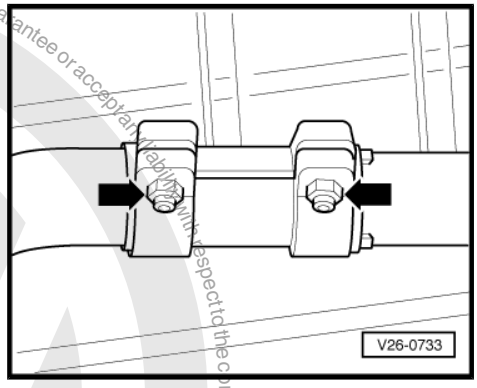

– Loosen the nuts for the clamping sleeve -arrows- and slide it toward the rear.

– Tie the front exhaust pipe to the underbody.

– Remove the rear section of the exhaust system, refer to ⇒ Engine Mechanical, Fuel Injection and Ignition; Rep. Gr. 26 ; Exhaust Pipes/Mufflers; Overview - Muffler .

– Loosen, but do not remove, the driveshaft center bearing bolts -arrows-.

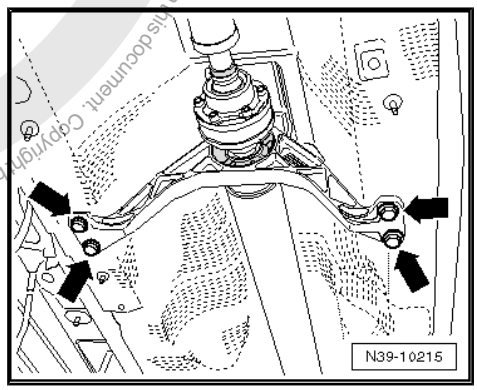

– Make sure there is a marking (a color dot) on the flexible disc/ the driveshaft flange on the rear final drive -arrows-.

– If the marking is not there, then mark the position of the flexible disc/driveshaft to the driveshaft flange on the rear final drive.

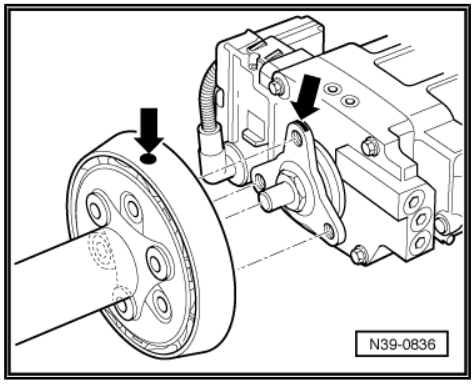

Protected by copyright. Copying for private or commercial purposes, in part or in whole, is not permitted unless authorised by Volkswagen AG. Volkswagen AG does not guarantee or accept any liability with respect to the correctness of information in this document. Copyright by Volkswagen AG.

– To loosen the driveshaft bolts, counterhold with the Counterhold - Multiple Use - T10172A- and the Counterhold - Kit - Adapter 5 - T10172/5- on the rear final drive.

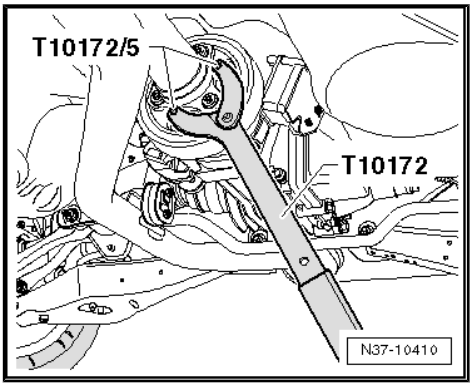

– Remove the driveshaft bolts -arrows- on the rear final drive.

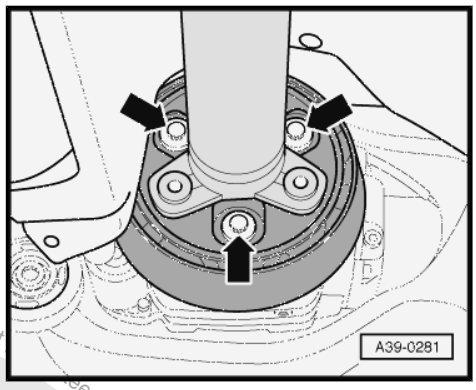

– Remove the driveshaft from the centering pins at the rear final drive. Press the driveshaft slightly forward when doing this. Therefore remove the bolts from the center bearing/driveshaft if necessary.

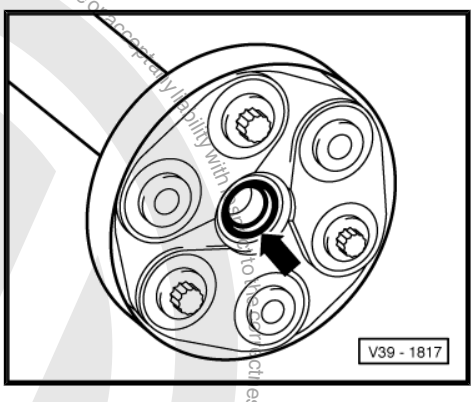

> **Caution**
>
> *Risk of damaging sealing ring -arrow - in driveshaft flange.*
>
> ♦ *Remove the driveshaft horizontally from the centering pins.*

– Then tie up the rear area of the driveshaft -A- with for example a wire -B- to the side of the body.

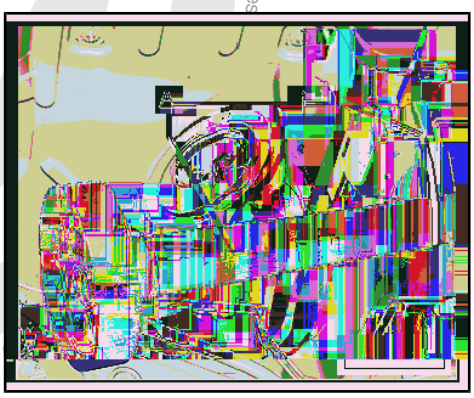

Protected by copyright. Copying for private or commercial purposes, in part or in whole, not permitted unless authorised by Volkswagen AG. Volkswagen AG does not give any guarantee or accept any liability with respect to the correctness of information in this document. Copyright by Volkswagen AG.

– Disconnect the connector -B- from the All Wheel Drive Control Module - J492- -A-.

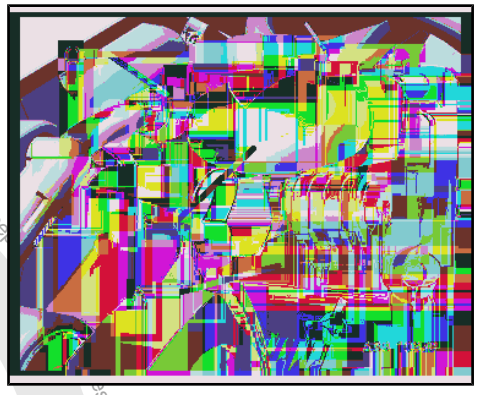

Note

Do not disconnect the connector -C-.

– Place the Used Oil Collection and Extraction Unit - SMN372500- under rear the final drive.

– Remove the drain plug -A- and completely drain the High Performance Haldex Clutch Oil .

– Install the drain plug -A- with the new sealing ring and tighten to 30 Nm.

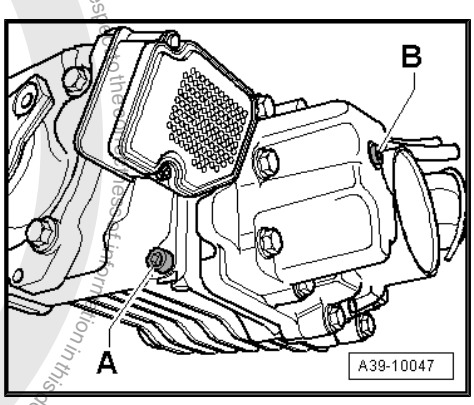

– Remove the fastening bolts -arrows- and remove the Haldex clutch from the rear final drive.

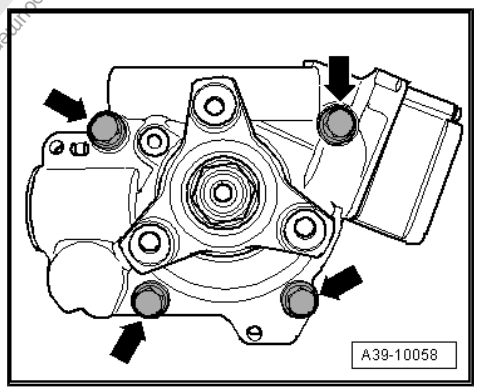

Protected by copyright. Copyright by Volkswagen AG.

Installing

Install in reverse order of removal. Note the following:

– Remove the old O-ring -arrow- from the Haldex clutch.

– Insert the new O-ring -arrow- and lightly lubricate with High Performance Haldex Clutch Oil .

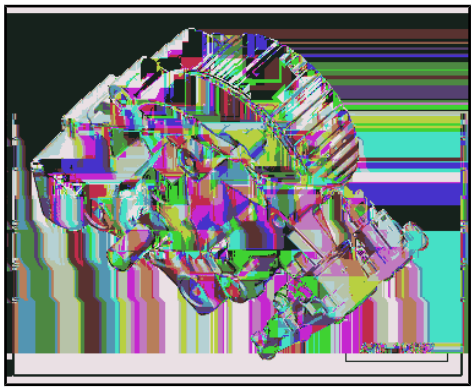

– Insert the Haldex clutch -1- in the rear final drive. Install Guide Pins - T10093- for exact guidance.

– Rotate at flange/driveshaft -2- and insert Haldex clutch all the way in.

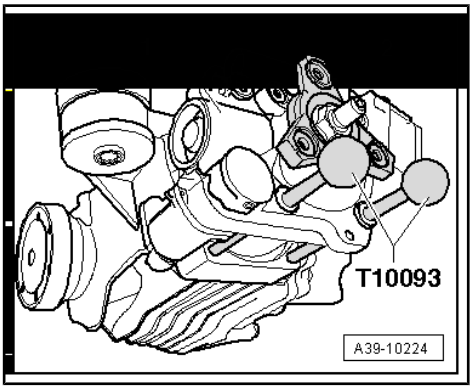

– Tighten the bolts -arrows- to the tightening specification.

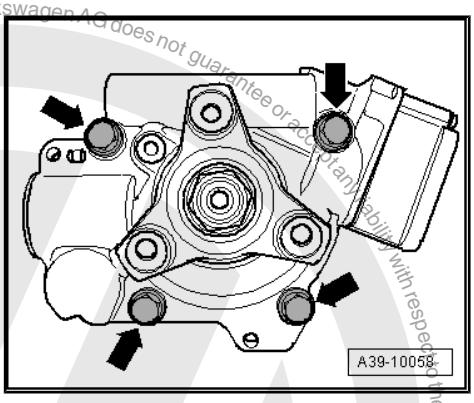

– Connect the connector -B- from the All Wheel Drive Control Module - J492- -A-.

The connector -C- must be removed.

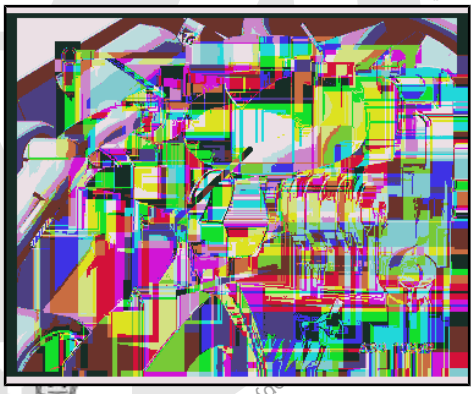

– Attach the driveshaft to the rear final drive, refer to ⇒ “2.2 Driveshaft, Removing and Installing”, page 10 .

– Reconnect exhaust system making sure it is not under stress, refer to ⇒ Engine Mechanical, Fuel Injection and Ignition; Rep. Gr. 26 ; Exhaust Pipes/Mufflers; Overview - Muffler .

– Add High Performance Haldex Clutch Oil and check the oil level in the Haldex clutch, refer to ⇒ “7 High-Performance Haldex Clutch Oil”, page 41 .

Tightening specifications

♦ Haldex clutch drain plug, refer to ⇒ “6 Gear Oil”, page 40 .

♦ Haldex clutch to final drive, refer to item -7- ⇒ Item 7 (page 45) .

Protected by copyright. Copying for private or commercial purposes, in part or in whole, is not permitted unless authorised by Volkswagen AG. Volkswagen AG does not guarantee or accept any liability with respect to the copyright by Volkswagen AG.

8.5 All Wheel Drive Control Module - J492- , Removing and Installing

⇒ “8.5.1 All Wheel Drive Control Module J492 , Removing and Installing, Generation V”, page 52

8.5.1 All Wheel Drive Control Module - J492- , Removing and Installing, Generation V

Removing

– Remove the connectors from -B and C- from the All Wheel Drive Control Module - J492- -A-.

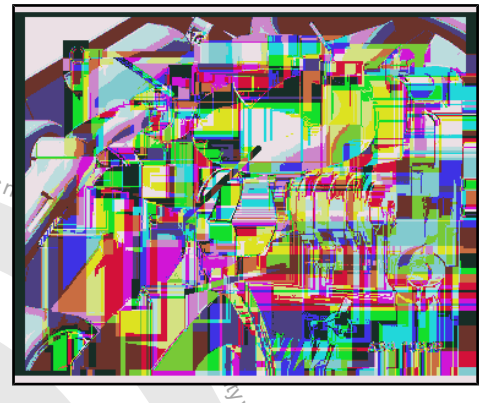

– Remove the All Wheel Drive Control Module - J492- bolts -arrows- from the Haldex clutch and the All Wheel Drive Control Module - J492- -A-.

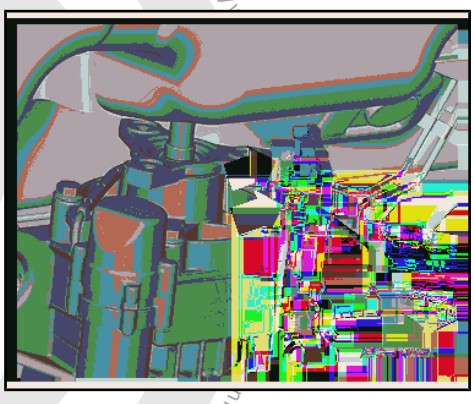

Installing

Install in reverse order of removal.

Tightening specifications

♦ All Wheel Drive Control Module - J492- to Haldex clutch, refer to item -3- ⇒ Item 3 (page 45)

Protected by copyright. Copying for private or commercial purposes, in part or in whole, is not permitted unless authorised by Volkswagen AG. Volkswagen AG does not guarantee or assume any liability in this document. Copyright by Volkswagen AG.

9 Special Tools

Special tools and workshop equipment required

- Puller - Seal Lever - VW681-
- Drive Sleeve - 30-20-
- Counterhold - Crankshaft Sprocket - 3415-
- Seal Installer - Shaft Seal Ring - T10019-
- Puller - Kukko 3 Jaw - 100x100mm - Kukko 12/1-
- Torque Wrench 1601 - VAG1601-

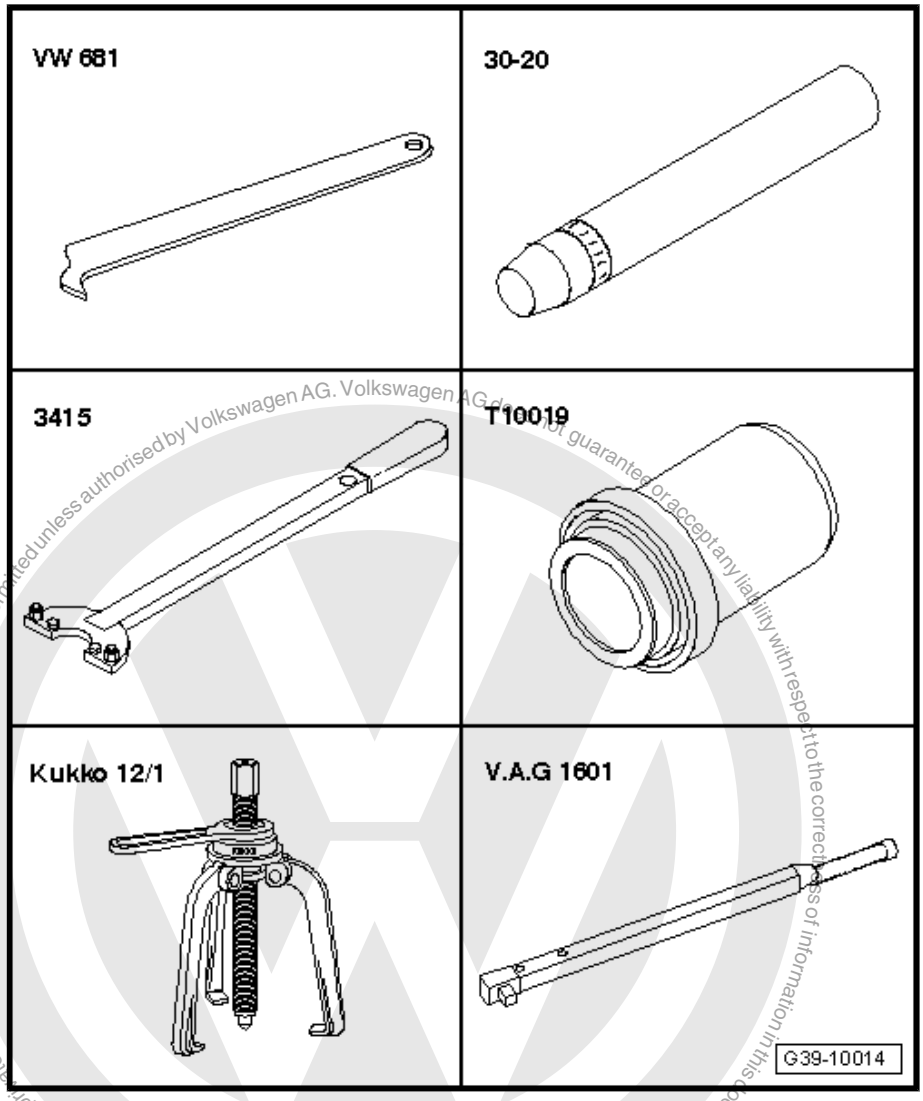

Protected by copyright. Copying for private or commercial purposes, in part or in whole, is not permitted unless authorised by Volkswagen AG. Volkswagen AG does not guarantee or accept any liability with respect to the correctness of information in this document. Copyright by Volkswagen AG.

- Thrust Piece3291/1 from the Bushing Tool Kit - 3291-
- Spindle from the Bushing Tool Set - 3292-
- Thrust pieces 3348 and 3348/1 from the Bearing Installer - Multiple Use - 3348-
- Puller - Kukko Internal - 46-56mm - 21/7- -1-
- Puller - Kukko Counterstay - 22/2- -4-

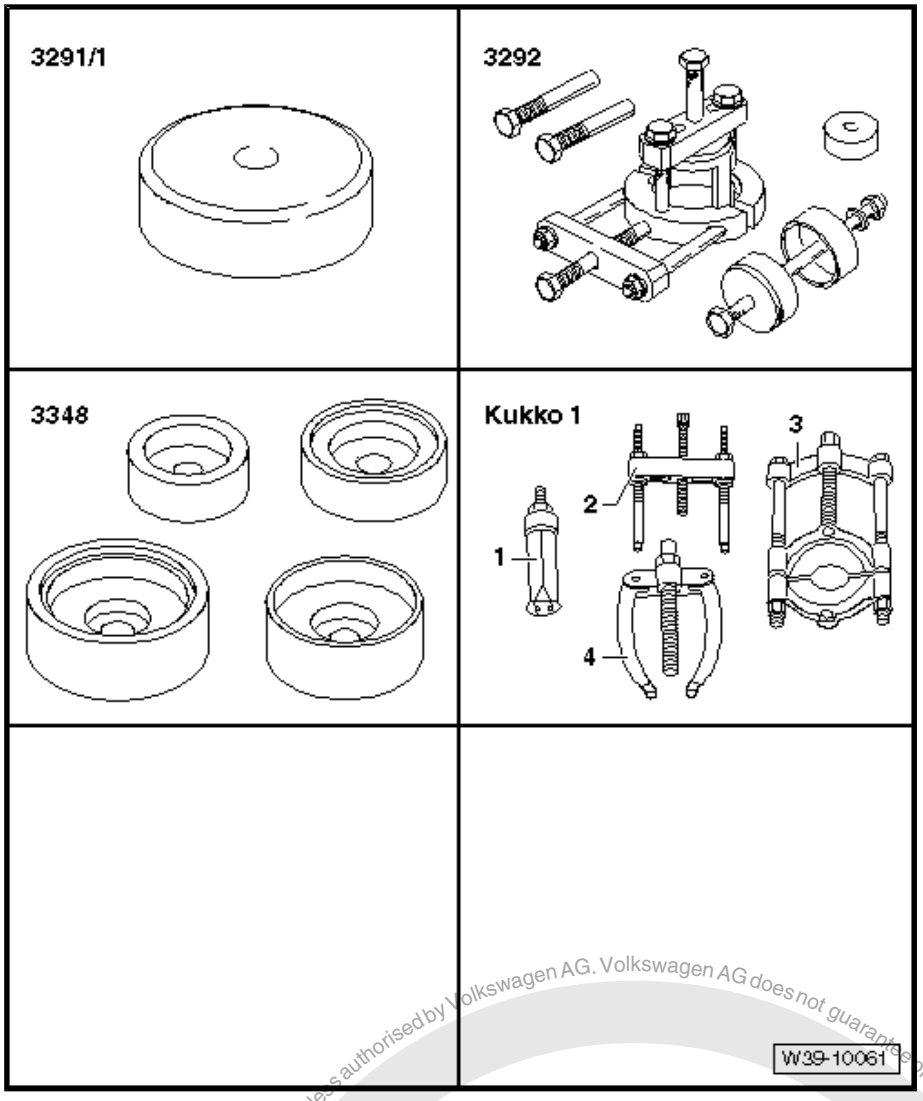

Protected by copyright. Copying for private or commercial purposes, in part or in whole, is not permitted unless authorised by Volkswagen AG. Volkswagen AG does not guarantee or accept any liability with respect to the correctness of information in this document. Copyright by Volkswagen AG.

- Torque Wrench 5-50Nm - VAG1331-
- Torque Wrench 1332 40-200Nm - VAG1332-
- Engine and Gearbox Jack - VAS6931-

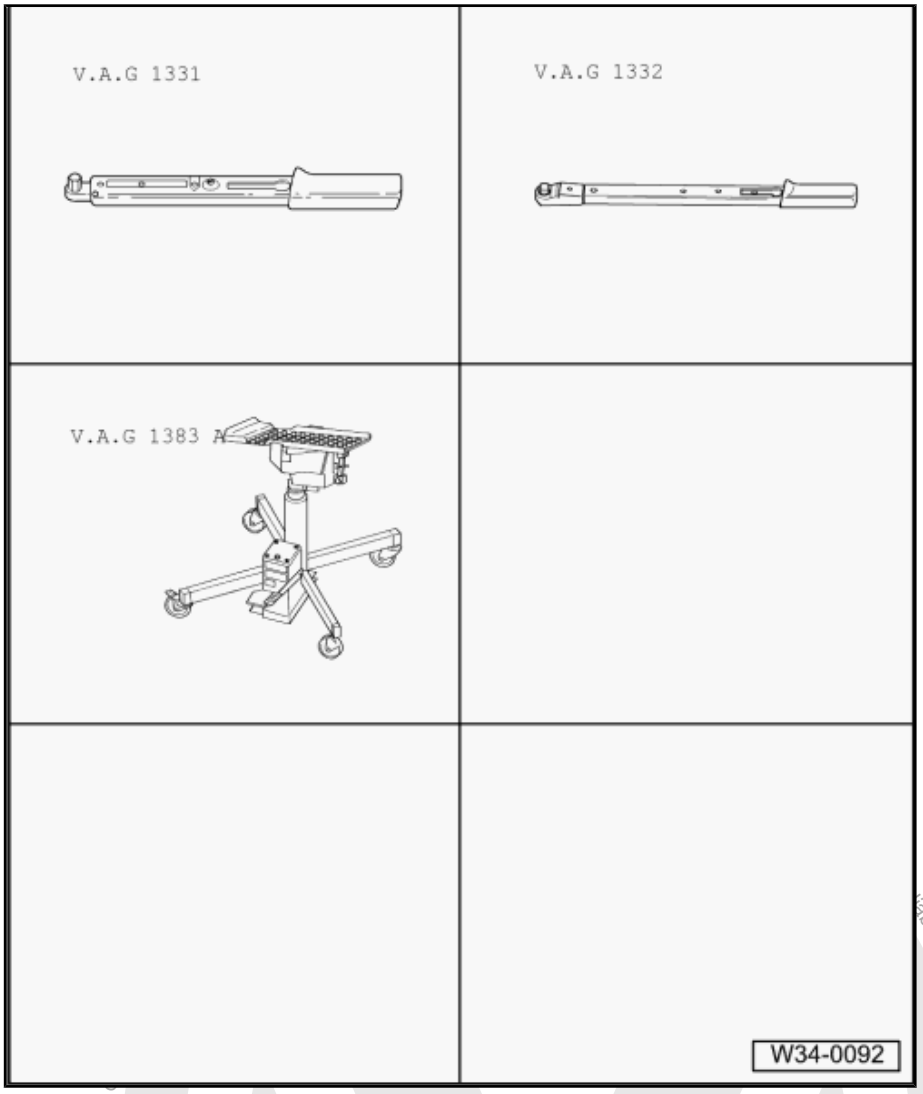

- Used Oil Collection and Extraction Unit - SMN372500-

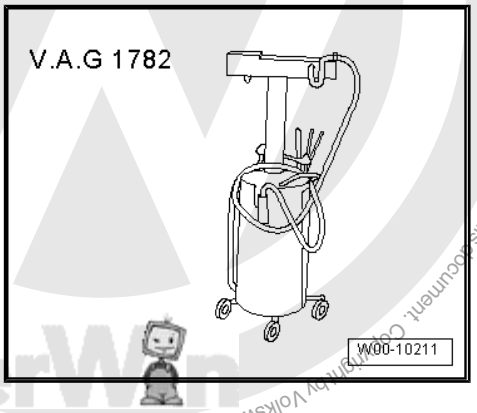

Protected by copyright. Copying for private or commercial purposes, in part or in whole, is not permitted unless authorised by Volkswagen AG. Volkswagen AG does not guarantee or accept any liability with respect to the correctness of information in this document.

- Multipoint Socket - T10035- and if necessary Bits for VAG1331/13 - T10099-

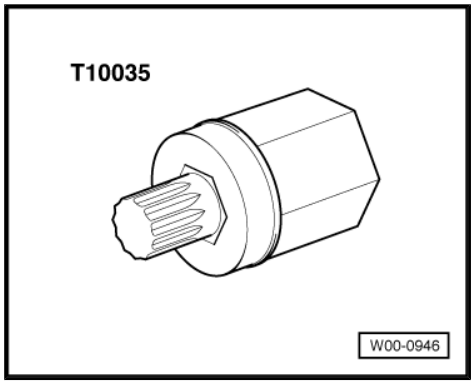

- Tensioning Strap - T10038-

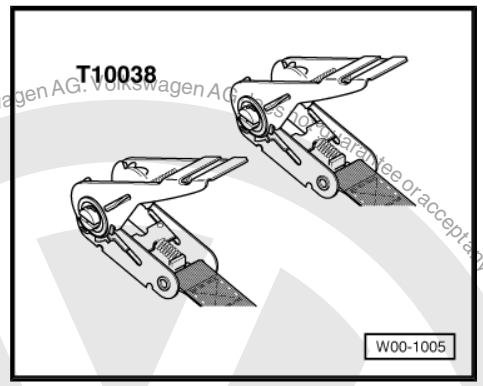

- Guide Pins - T10093-

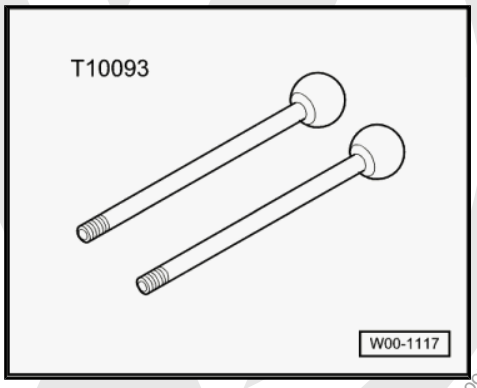

- Counterhold - Kit - Multiple Use - T10172-

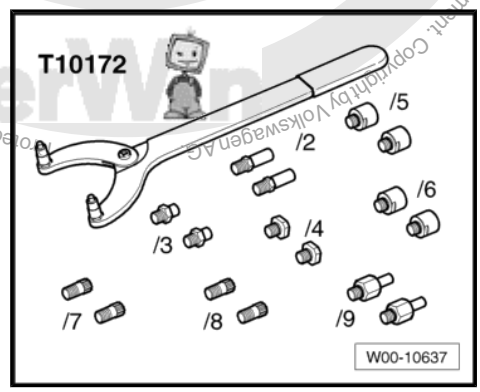

Protected by copyright. Copying for private or commercial purposes, in part or in whole, is not permitted unless authorised by Volkswagen AG. Volkswagen AG does not guarantee or accept any liability with respect to the correctness of information in this document. Copyright by Volkswagen AG.

Protected by copyright. Copying for private or commercial purposes, in part or in whole, is not permitted unless authorised by Volkswagen AG. Volkswagen AG does not guarantee or accept any liability with respect to the correct

- Torque Wrench 5-50Nm - VAG1331-

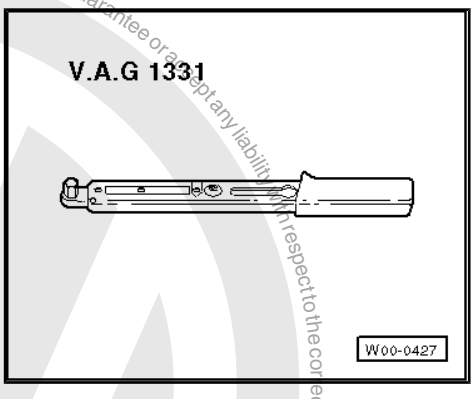

- Shop Crane - Drip Tray - VAS6208-

- Charging Device For Haldex Coupling 2 - VAS6291A-

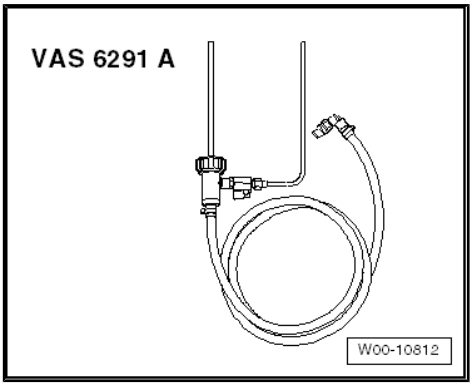

- Oil Filler - Adapter 2 - VAS6262/2-

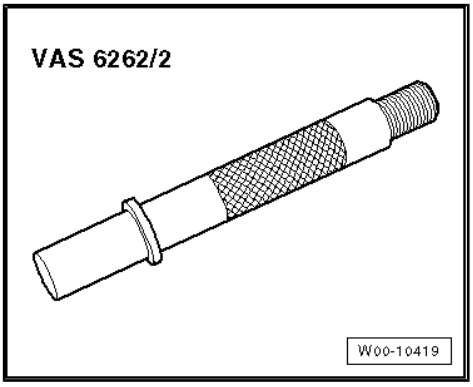

Protected by copyright. Copying for private or commercial purposes, in part or in whole, is not permitted unless authorised by Volkswagen AG. Volkswagen AG does not guarantee or accept any liability with respect to the correctness of information in this document. Copyright by Volkswagen AG.

- Engine and Gearbox Jack - VAS6931-

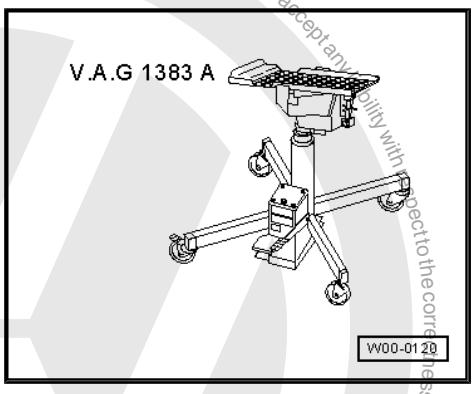

- Puller - Seal Lever - VW681

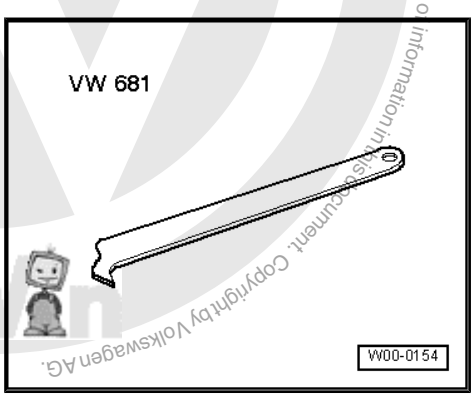

- Slide Hammer Set - VW771-

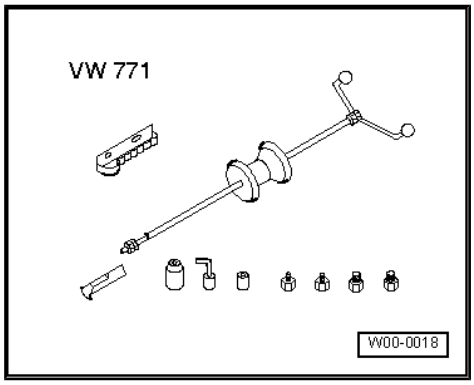

- Transmission Support - Pins 34 - 3282/34-

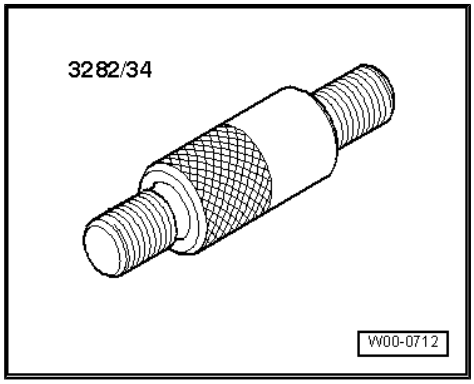

- Seal Installer - Flange Shaft - 3305-

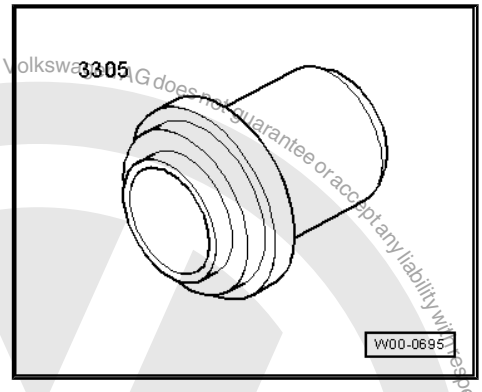

- -2- bridge from Puller - Kukko Puller - 50-110mm Width, 150mm Length - 18/0-

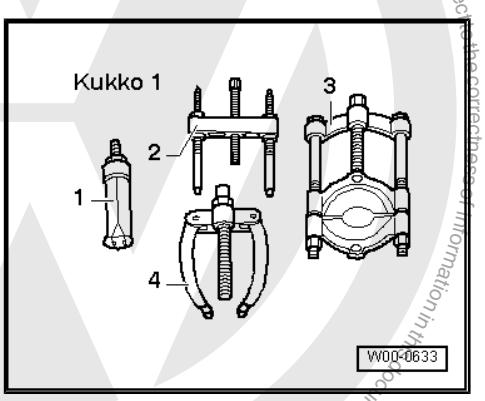

Protected by copyright. Copying for private or commercial purposes, in part or in whole, is not permitted unless authorised by Volkswagen AG. Volkswagen AG does not guarantee or accept any liability with respect to the correctness of information in this document. Copyright by Volkswagen AG.

Edition K00595821 FN 04/1/2014 - JLH

10 Revision History

Revision	Date	Job Type	Feedback #	Notes	Editor
3					
2					
1	4/1/2014	Factory New	N/A		Jim Harder

Protected by copyright. Copying for private or commercial purposes, in part or in whole, is not permitted unless authorised by Volkswagen AG. Volkswagen AG does not guarantee or accept any liability with respect to the correctness of information in this document. Copyright by Volkswagen AG.

Cautions & Warnings

Please read these WARNINGS and CAUTIONS before proceeding with maintenance and repair work. You must answer that you have read and you understand these WARNINGS and CAUTIONS before you will be allowed to view this information.

- If you lack the skills, tools and equipment, or a suitable workshop for any procedure described in this manual, we suggest you leave such repairs to an authorized Volkswagen retailer or other qualified shop. We especially urge you to consult an authorized Volkswagen retailer before beginning repairs on any vehicle that may still be covered wholly or in part by any of the extensive warranties issued by Volkswagen.

- Disconnect the battery negative terminal (ground strap) whenever you work on the fuel system or the electrical system. Do not smoke or work near heaters or other fire hazards. Keep an approved fire extinguisher handy.

- Volkswagen is constantly improving its vehicles and sometimes these changes, both in parts and specifications, are made applicable to earlier models. Therefore, part numbers listed in this manual are for reference only. Always check with your authorized Volkswagen retailer parts department for the latest information.

- Any time the battery has been disconnected on an automatic transmission vehicle, it will be necessary to reestablish Transmission Control Module (TCM) basic settings using the VAG 1551 Scan Tool (ST).

- Never work under a lifted vehicle unless it is solidly supported on stands designed for the purpose. Do not support a vehicle on cinder blocks, hollow tiles or other props that may crumble under continuous load. Never work under a vehicle that is supported solely by a jack. Never work under the vehicle while the engine is running.

- For vehicles equipped with an anti-theft radio, be sure of the correct radio activation code before disconnecting the battery or removing the radio. If the wrong code is entered when the power is restored, the radio may lock up and become inoperable, even if the correct code is used in a later attempt.

- If you are going to work under a vehicle on the ground, make sure that the ground is level. Block the wheels to keep the vehicle from rolling. Disconnect the battery negative terminal (ground strap) to prevent others from starting the vehicle while you are under it.

- Do not attempt to work on your vehicle if you do not feel well. You increase the danger of injury to yourself and others if you are tired, upset or have taken medicine or any other substances that may impair you or keep you from being fully alert.

- Never run the engine unless the work area is well ventilated. Carbon monoxide (CO) kills.

- Always observe good workshop practices. Wear goggles when you operate machine tools or work with acid. Wear goggles, gloves and other protective clothing whenever the job requires working with harmful substances.

- Tie long hair behind your head. Do not wear a necktie, a scarf, loose clothing, or a necklace when you work near machine tools or running engines. If your hair, clothing, or jewelry were to get caught in the machinery, severe injury could result.

- Do not re-use any fasteners that are worn or deformed in normal use. Some fasteners are designed to be used only once and are unreliable and may fail if used a second time. This includes, but is not limited to, nuts, bolts, washers, circlips and cotter pins. Always follow the recommendations in this manual - replace these fasteners with new parts where indicated, and any other time it is deemed necessary by inspection.

next

© 2002 Volkswagen of America, Inc.
All rights reserved. Information contained in this document is based on the latest information available at the time of printing and is subject to the copyright and other intellectual property rights of Volkswagen of America, Inc., its affiliated companies and its licensors. All rights are reserved to make changes at any time without notice. No part of this document may be reproduced, stored in a retrieval system, or transmitted in any form or by any means, electronic, mechanical, photocopying, recording, or otherwise, nor may these materials be modified or reposted to other sites, without the prior expressed written permission of the publisher.
Version 1.0

Cautions & Warnings

- Illuminate the work area adequately but safely. Use a portable safety light for working inside or under the vehicle. Make sure the bulb is enclosed by a wire cage. The hot filament of an accidentally broken bulb can ignite spilled fuel or oil.

- Friction materials such as brake pads and clutch discs may contain asbestos fibers. Do not create dust by grinding, sanding, or by cleaning with compressed air. Avoid breathing asbestos fibers and asbestos dust. Breathing asbestos can cause serious diseases such as asbestosis or cancer, and may result in death.

- Finger rings should be removed so that they cannot cause electrical shorts, get caught in running machinery, or be crushed by heavy parts.

- Before starting a job, make certain that you have all the necessary tools and parts on hand. Read all the instructions thoroughly; do not attempt shortcuts. Use tools that are appropriate to the work and use only replacement parts meeting Volkswagen specifications. Makeshift tools, parts and procedures will not make good repairs.

- Catch draining fuel, oil or brake fluid in suitable containers. Do not use empty food or beverage containers that might mislead someone into drinking from them. Store flammable fluids away from fire hazards. Wipe up spills at once, but do not store the oily rags, which can ignite and burn spontaneously.

- Use pneumatic and electric tools only to loosen threaded parts and fasteners. Never use these tools to tighten fasteners, especially on light alloy parts. Always use a torque wrench to tighten fasteners to the tightening torque listed.

- Keep sparks, lighted matches, and open flame away from the top of the battery. If escaping hydrogen gas is ignited, it will ignite gas trapped in the cells and cause the battery to explode.

- Be mindful of the environment and ecology. Before you drain the crankcase, find out the proper way to dispose of the oil. Do not pour oil onto the ground, down a drain, or into a stream, pond, or lake. Consult local ordinances that govern the disposal of wastes.

- The air-conditioning (A/C) system is filled with a chemical refrigerant that is hazardous. The A/C system should be serviced only by trained automotive service technicians using approved refrigerant recovery/recycling equipment, trained in related safety precautions, and familiar with regulations governing the discharging and disposal of automotive chemical refrigerants.

- Before doing any electrical welding on vehicles equipped with anti-lock brakes (ABS), disconnect the battery negative terminal (ground strap) and the ABS control module connector.

- Do not expose any part of the A/C system to high temperatures such as open flame. Excessive heat will increase system pressure and may cause the system to burst.

- When boost-charging the battery, first remove the fuses for the Engine Control Module (ECM), the Transmission Control Module (TCM), the ABS control module, and the trip computer. In cases where one or more of these components is not separately fused, disconnect the control module connector(s).

- Some of the vehicles covered by this manual are equipped with a supplemental restraint system (SRS), that automatically deploys an airbag in the event of a frontal impact. The airbag is operated by an explosive device. Handled improperly or without adequate safeguards, it can be accidentally activated and cause serious personal injury. To guard against personal injury or airbag system failure, only trained Volkswagen Service technicians should test, disassemble or service the airbag system.

© 2002 Volkswagen of America, Inc.
All rights reserved. Information contained in this document is based on the latest information available at the time of printing and is subject to the copyright and other intellectual property rights of Volkswagen of America, Inc., its affiliated companies and its licensors. All rights are reserved to make changes at any time without notice. No part of this document may be reproduced, stored in a retrieval system, or transmitted in any form or by any means, electronic, mechanical, photocopying, recording, or otherwise, nor may these materials be modified or reposted to other sites, without the prior expressed written permission of the publisher.
Version 1.0

Cautions & Warnings

- Do not quick-charge the battery (for boost starting) for longer than one minute, and do not exceed 16.5 volts at the battery with the boosting cables attached. Wait at least one minute before boosting the battery a second time.

- Never use a test light to conduct electrical tests of the airbag system. The system must only be tested by trained Volkswagen Service technicians using the VAG 1551 Scan Tool (ST) or an approved equivalent. The airbag unit must never be electrically tested while it is not installed in the vehicle.

- Some aerosol tire inflators are highly flammable. Be extremely cautious when repairing a tire that may have been inflated using an aerosol tire inflator. Keep sparks, open flame or other sources of ignition away from the tire repair area. Inflate and deflate the tire at least four times before breaking the bead from the rim. Completely remove the tire from the rim before attempting any repair.

- When driving or riding in an airbag-equipped vehicle, never hold test equipment in your hands or lap while the vehicle is in motion. Objects between you and the airbag can increase the risk of injury in an accident.

I have read and I understand these Cautions and Warnings.

back OK

Protected by copyright. Copying for private or commercial purposes, in part or in whole, is not permitted unless authorised by Volkswagen AG. Volkswagen AG does not guarantee or accept any liability with respect to the correctness of information in this document. Copyright by Volkswagen AG.

© 2002 Volkswagen of America, Inc.
All rights reserved. Information contained in this document is based on the latest information available at the time of printing and is subject to the copyright and other intellectual property rights of Volkswagen of America, Inc., its affiliated companies and its licensors. All rights are reserved to make changes at any time without notice. No part of this document may be reproduced, stored in a retrieval system, or transmitted in any form or by any means, electronic, mechanical, photocopying, recording, or otherwise, nor may these materials be modified or reposted to other sites, without the prior expressed written permission of the publisher.
Version 1.0