LEXUS RX 400h

Hybrid

2007 Model

Emergency Response Guide

© 2005 Toyota Motor Corporation
All rights reserved. This document may not be
altered without the written permission of Toyota Motor Corporation.

06RX 400hERG REV – (05/27/05)

Downloaded from www.Manualslib.com manuals search engine

Foreword

In April 2005, Lexus released the Lexus RX 400h gasoline-electric hybrid vehicle in North America. Except where noted in this guide, basic vehicle systems and features for the RX 400h are the same as those on the conventional, non-hybrid, Lexus RX 350. To educate and assist emergency responders in the safe handling of the RX 400h hybrid technology, Lexus published this RX 400h Emergency Response Guide.

High voltage electricity powers the electric motors, generator, inverter/converter, and power steering. All other automotive electrical devices such as the headlights, radio, and gauges are powered from a separate 12-Volt battery. Numerous safeguards have been designed into the RX 400h to help ensure the high voltage, approximately 288-Volt, Nickel Metal Hydride (NiMH) Hybrid Vehicle (HV) battery pack is kept safe and secure in an accident.

The RX 400h utilizes the following electrical systems:

- Maximum 650-Volts AC
- Nominal 288-Volts DC
- Nominal 42-Volts DC
- Nominal 12-Volts DC

RX 400h Features:

- Adoption of *Hybrid Synergy Drive* as the name for the Lexus Gasoline - Electric Hybrid System.
- *Hybrid Synergy Drive* includes a boost converter in the inverter assembly that boosts to 650-Volts the available voltage to the electric motors.
- The high voltage hybrid vehicle battery pack rated at 288-Volts.
- A high voltage motor driven air conditioning compressor rated at 288-Volts
- A high voltage Electric Power Steering (EPS) assist motor rated at 42-Volts.
- Body electrical system rated at 12-Volts negative chassis ground.
- Both two-wheel-drive (2WD) and four-wheel-drive (4WD) configurations are available.
- 4WD models include an additional 650-Volt electric motor to drive the rear wheels.
- Supplemental Restraint System (SRS) - dual stage frontal airbags, driver knee airbag, front seat side airbags, curtain shield airbags, and front seat belt pretensioners.

High voltage electrical safety is an important factor in the emergency handling of the RX 400h *Hybrid Synergy Drive* system. It is important to recognize and understand the disabling procedures and warnings throughout the guide.

Additional topics contained in the guide include:

- Lexus RX 400h identification.
- Major *Hybrid Synergy Drive* component locations and descriptions.
- Extrication, fire, recovery, and additional emergency response information.
- Roadside assistance information.

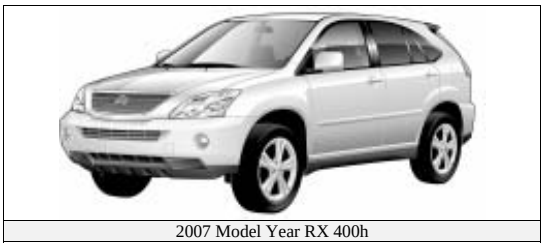

2007 Model Year RX 400h

By following the information in this guide, emergency responders should be able to mitigate a rescue involving the Lexus RX 400h hybrid vehicle safely.

Downloaded from www.Manualslib.com manuals search engine

Table of Contents

Table of Contents	Page
About the RX 400h	1
RX 400h Identification	2
Hybrid Synergy Drive Component Locations & Descriptions	6
Hybrid Synergy Drive Operation	9
Hybrid Vehicle (HV) Battery Pack and Auxiliary Battery	10
High Voltage Safety	11
SRS Airbags & Seat Belt Pretensioners	13
Emergency Response	15
Extrication	15
Fire	18
Overhaul	19
Recovery/Recycling NiMH HV Battery Pack	19
Spills	20
First Aid	20
Submersion	21
Roadside Assistance	22

Downloaded from www.Manualslib.com manuals search engine

About the RX 400h

The RX 400h is the first gasoline-electric hybrid vehicle for Lexus. The gasoline-electric hybrid system has been named *Hybrid Synergy Drive*. *Hybrid Synergy Drive* means that the vehicle contains a gasoline engine and an electric motor for power. Two energy sources are stored on board the vehicle:

1. Gasoline stored in the fuel tank for the gasoline engine.
2. Electricity stored in a high voltage Hybrid Vehicle (HV) battery pack for the electric motor.

The result of combining these two power sources is improved fuel economy and reduced emissions. The gasoline engine also powers an electric generator to recharge the battery pack; unlike a pure all electric vehicle, the RX 400h never needs to be recharged from an external electric power source.

Depending on the driving conditions one or both sources are used to power the vehicle. The following illustration demonstrates how the RX 400h operates in various driving modes.

❶ On light acceleration at low speeds, the vehicle is powered by the electric motor. The gasoline engine is shut off.

❷ During normal driving, the vehicle is powered mainly by the gasoline engine. The gasoline engine is also used to recharge the battery pack.

❸ During full acceleration, such as climbing a hill, both the gasoline engine and the electric motor power the vehicle.

❹ During deceleration, such as braking, the vehicle regenerates the kinetic energy from the wheels to produce electricity that recharges the battery pack.

❺ While the vehicle is stopped, the gasoline engine and electric motor are off, however the vehicle remains on and operational.

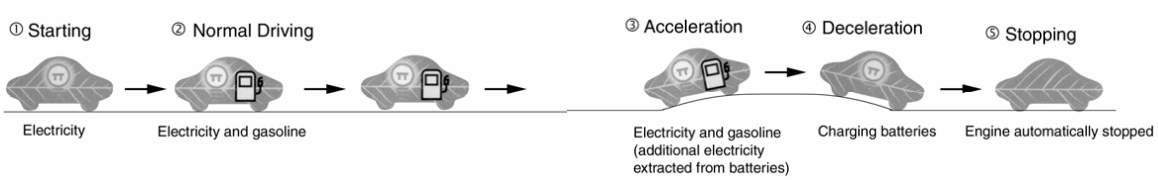

Downloaded from www.Manualslib.com manuals search engine

RX 400h Identification

In appearance, the 2007 RX 400h is nearly identical to the conventional, non-hybrid Lexus RX 350. The RX 400h is a 5-door Luxury Utility Vehicle. Exterior, interior, and engine compartment illustrations are provided to assist in identification.

The alphanumeric 17 character Vehicle Identification Number (VIN) is provided in the front windshield cowl, driver door post, and under the front passenger seat.

Example VIN: JTJGW31U840020208 (2WD)
JTJHW31U850011201 (4WD)

An RX 400h is identified by the first 6 alphanumeric characters; **JTJGW3 (2WD) and JTJHW3 (4WD).**

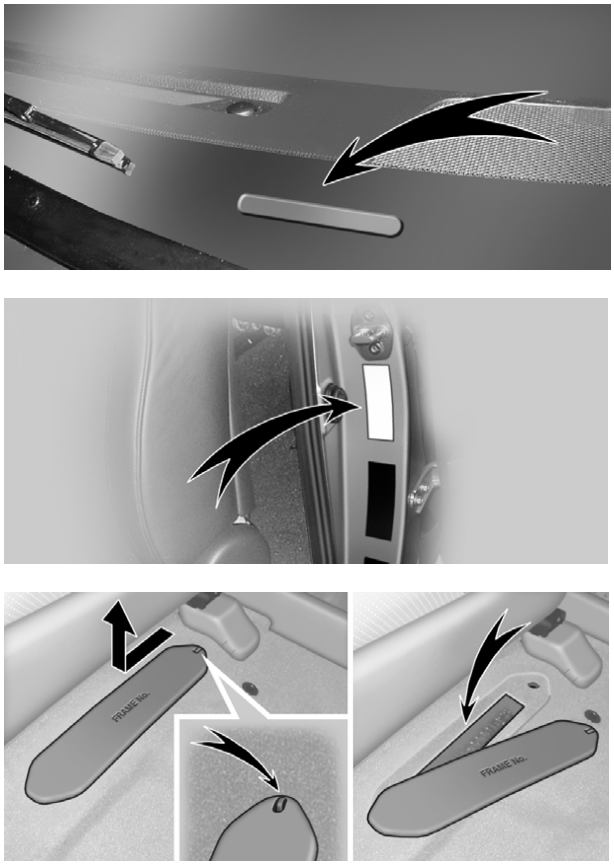

VIN Plate Locations

Downloaded from www.Manualslib.com manuals search engine

RX 400h Identification (Continued)

Exterior

❶ LEXUS RX 400h logos on the rear hatchback door.

❷ Gasoline fuel filler door located on the driver side rear quarter panel.

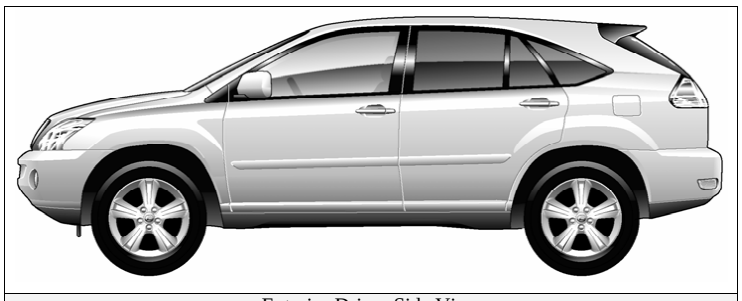

Exterior Driver Side View

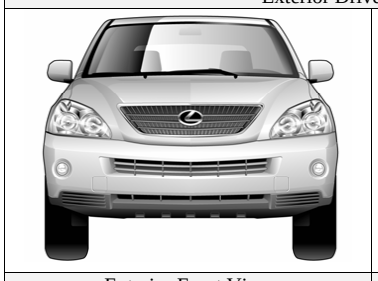

Exterior Front View

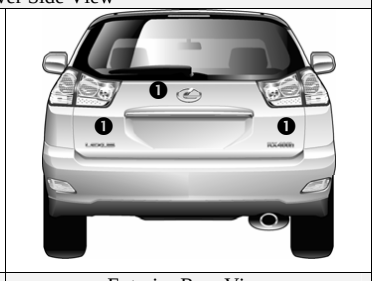

Exterior Rear View

Exterior Rear and Driver Side View

Downloaded from www.Manualslib.com manuals search engine

RX 400h Identification (Continued)

Interior

❸ Instrument cluster (speedometer, fuel gauge, warning lights), located in the dash behind the steering wheel, is different than the one on the conventional, non-hybrid RX 350.

❹ In place of a tachometer, a power meter showing kW output is used.

NOTE:
If the vehicle is off, the instrument cluster gauges will be “blacked out”, not illuminated.

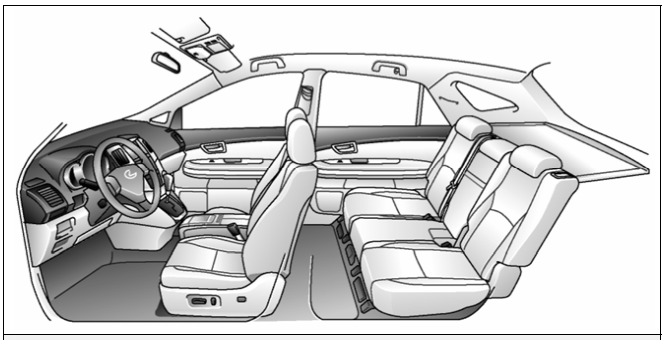

Interior View

Instrument Cluster View

Downloaded from www.Manualslib.com manuals search engine

RX 400h Identification (Continued)

Engine Compartment

❺ 3.3-liter aluminum alloy gasoline engine.

❻ High voltage inverter/converter assembly with logos on the cover.

Logos on Cover

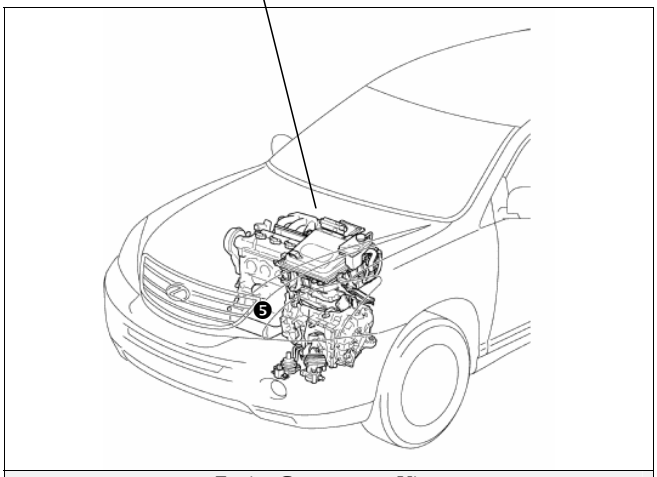

Engine Compartment View

Downloaded from www.Manualslib.com manuals search engine

Hybrid Synergy Drive Component Locations & Descriptions

Component	Location	Description
12-Volt ❶ Auxiliary Battery	Engine Compartment	Lead-acid battery powers all low voltage electrical equipment.
Hybrid ❷ Vehicle (HV) Battery Pack	Cabin Area, Mounted to Cross Member and Under Rear Seat	288-Volt Nickel Metal Hydride (NiMH) battery pack consisting of 30 low voltage (9.6-volt) modules connected in series.
Power ❸ Cables	Under Carriage and Engine Compartment	Orange colored power cables carry high voltage Direct Current (DC) between the HV battery pack, inverter/converter, and A/C compressor. Also carries 3-phase Alternating Current (AC) between inverter/converter, motor, and generator.
Inverter/ Converter ❹	Engine Compartment	Boosts and inverts the high voltage electricity from the HV battery pack to 3-phase AC electricity that drives the electric motor. The inverter/converter also converts AC electricity from the electric generator and motor (regenerative braking) to DC that recharges the HV battery pack.
Gasoline ❺ Engine	Engine Compartment	Provides two functions: 1) powers vehicle; 2) powers generator to recharge the HV battery pack. The engine is started and stopped under control of the vehicle computer.
Front Electric ❻ Motor	Engine Compartment	3-phase high voltage AC permanent magnet electric motor contained in the front transaxle. Used to power the front wheels.
Electric ❼ Generator	Engine Compartment	3-phase high voltage AC generator contained in the front transaxle. Used to recharge the HV battery pack.
A/C ❽ Compressor	Engine Compartment	3-phase high voltage AC electrically driven motor compressor.

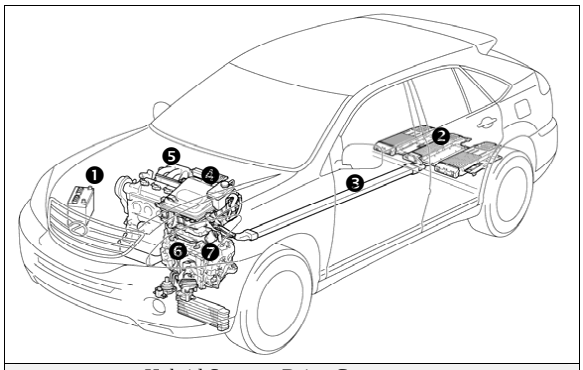

Hybrid Synergy Drive Components

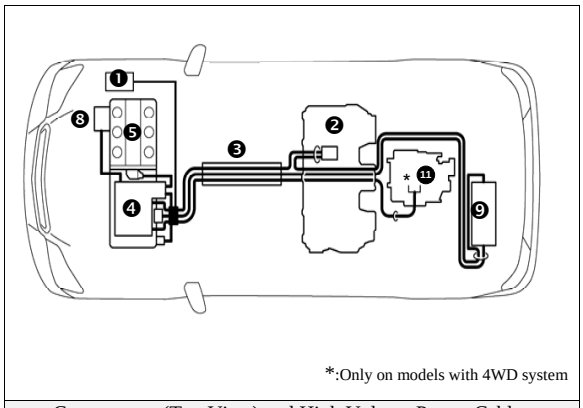

Components (Top View) and High Voltage Power Cables

Downloaded from www.Manualslib.com manuals search engine

Hybrid Synergy Drive Component Locations & Descriptions (Continued)

Component	Location	Description
EPS DC-DC Converter ❾	Underneath the cargo area by the spare tire	Converts 288-Volts from the HV battery pack to 42-Volt. Yellow-colored cables conduct the 42-Volt power underneath the vehicle floor pan to the power steering rack via the EPS ECU, located in the engine compartment.
Fuel Tank ❿ and Fuel Lines	Undercarriage, Driver Side	Fuel tank provides gasoline via a single fuel line to the engine. The fuel line is routed along the driver side under the floor pan.
Rear Electric Motor ⓫ (4WD Model Only)	Rear Sub-Frame	3-phase high voltage AC permanent magnet electric motor contained in the rear transaxle used to power the rear wheels.

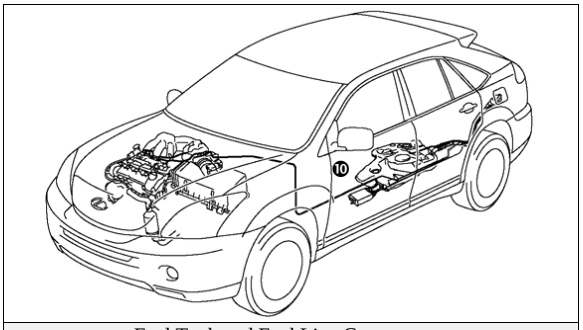

Fuel Tank and Fuel Line Components

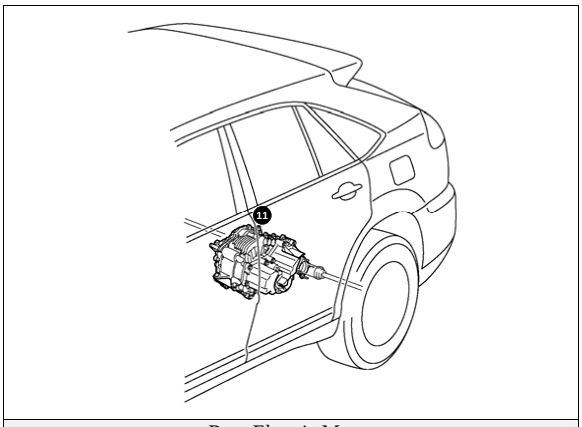

Rear Electric Motor

Downloaded from www.Manualslib.com manuals search engine

Hybrid Synergy Drive Component Locations & Descriptions (Continued)

Key Specifications:

Gasoline Engine:	208 hp, 3.3 liter Aluminum Alloy Engine
Electric Motors	
Front:	165hp, Permanent Magnet Motor
Rear:	67hp, Permanent Magnet Motor
Transmission:	Automatic Only
HV Battery:	288-Volt Sealed NiMH
Curb Weight	4,365lbs / 1,981 kg
Fuel Tank:	17.2 gals / 65 liters
Fuel Economy	31 / 27 (City/Hwy) miles/gal
	7.5 / 8.1 (City/Hwy) liters/100km
Frame Material:	Steel unibody
Body Material:	Steel panels

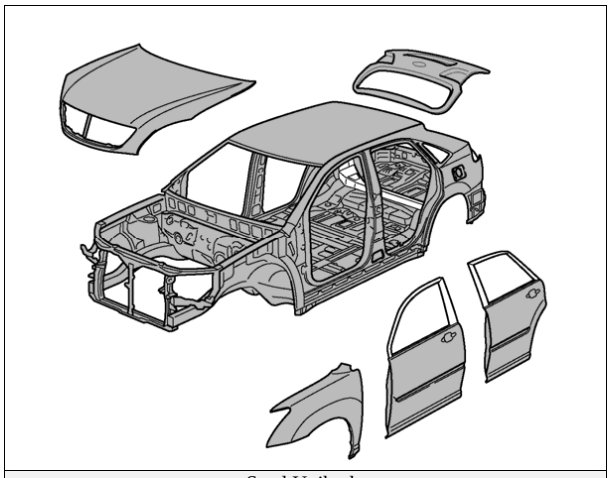

Steel Unibody

Downloaded from www.Manualslib.com manuals search engine

Hybrid Synergy Drive Operation

Once the **READY** indicator is illuminated in the instrument cluster, the vehicle may be driven. However, the gasoline engine does not idle like a typical automobile and will start and stop automatically. It is important to recognize and understand the **READY** indicator provided in the instrument cluster. When lit, it informs the driver that the vehicle is on and operational even though the gasoline engine may be off and the engine compartment is silent.

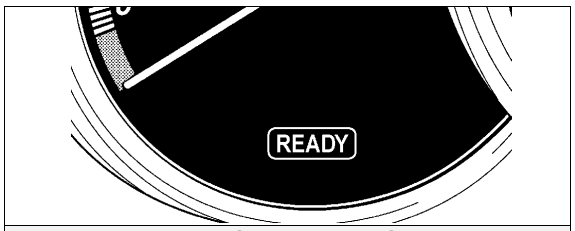

Instrument cluster **READY** Indicator

Vehicle Operation

- With the RX 400h, the gasoline engine may stop and start at any time while the **READY** indicator is on.

- Never assume that the vehicle is shut off just because the engine is off. Always look for the **READY** indicator status. The vehicle is shut off when the **READY** indicator is off.

- The vehicle may be powered by:
  1. The electric motor only.
  2. The gasoline engine only.
  3. A combination of both the electric motor and the gasoline engine.

- The vehicle computer determines the mode in which the vehicle operates to improve fuel economy and reduce emissions. The driver cannot manually select the mode.

Downloaded from www.Manualslib.com manuals search engine

Hybrid Vehicle (HV) Battery Pack and Auxiliary Battery

The RX 400h contains a next generation high voltage, Hybrid Vehicle (HV) battery pack and a low voltage auxiliary battery. The HV battery pack contains non-spillable, sealed Nickel Metal Hydride (NiMH) battery modules and the auxiliary battery is a typical automotive lead-acid type.

HV Battery Pack

- The HV battery pack is enclosed in a metal case and is rigidly mounted to the cabin area floor pan cross member under the rear seat. The metal case is isolated from high voltage and concealed by a cover in the cabin area.

- The HV battery pack consists of 30 low voltage (9.6-Volt) NiMH battery modules connected in series to produce approximately 288-Volts. Each NiMH battery module is non-spillable and sealed in a metal case.

- The electrolyte used in the NiMH battery module is an alkaline of potassium and sodium hydroxide. The electrolyte is absorbed into the battery cell plates and will form a gel that will not normally leak, even in a collision.

- In the unlikely event the battery pack is overcharged, the modules vent gases directly outside the vehicle through a vent hose.

HV Battery Pack	
Battery pack voltage	288-Volts
Number of NiMH battery modules in the pack	30
NiMH battery module voltage	9.6-Volts
NiMH battery pack dimensions	25 x 43 x 7 in (63 x 108 x 18 cm)
NiMH battery Pack weight	152.1 lbs (69 kg)

Components Powered by the HV Battery Pack

- Front Electric Motor
- Inverter/Converter
- Electric Generator
- Electric Power Steering
- Rear Electric Motor (with 4WD)
- A/C Compressor
- Power Cables

HV Battery Pack Recycling

- The HV battery pack is recyclable. Contact the nearest Lexus dealer or Lexus Roadside Assistance at:

  United States: (800) 255-3987, Canada: (800) 265-3987

Auxiliary Battery

- The RX 400h also contains a lead-acid 12-Volt battery. The 12-Volt auxiliary battery powers the vehicle electrical system similar to a conventional vehicle. As with conventional vehicles, the auxiliary battery is grounded (negative pole) to the metal chassis of the vehicle.

- The auxiliary battery is located in engine compartment area.

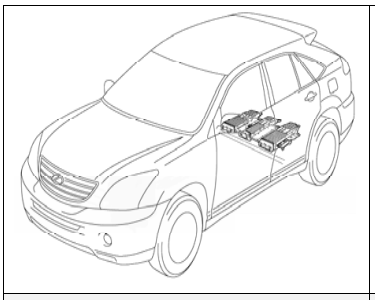

288-Volt HV Battery Pack

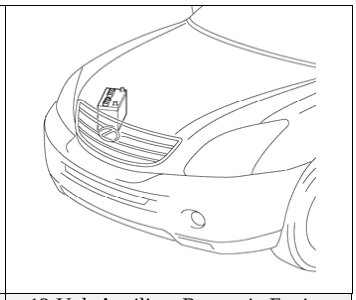

12-Volt Auxiliary Battery in Engine Compartment.

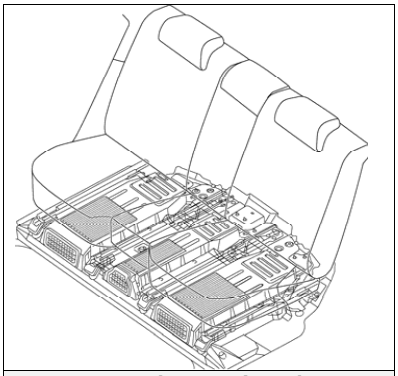

HV Battery Pack Mounted in Cabin Area

Downloaded from www.Manualslib.com manuals search engine

High Voltage Safety

The HV battery pack powers the high voltage electrical system with DC electricity. Positive and negative high voltage power cables are routed from the battery pack, under the vehicle floor pan, to the inverter/converter. The inverter/converter contains a circuit that boosts the HV battery voltage from 288 to 650-Volts DC. The inverter creates 3-phase AC to power the motors. A set of 3 power cables is routed from the inverter to each high voltage motor (electric motor, electric generator, A/C compressor, and optional 4WD rear motor). Occupants in the vehicle and emergency responders are separated from high voltage electricity by the following system:

High Voltage Safety System

- A high voltage fuse ❶ provides short circuit protection in the HV battery pack.

- Positive and negative high voltage power cables ❷ connected to the HV battery pack are controlled by 12-Volt normally open relays ❸. When the vehicle is shut off, the relays stop electricity flow from the HV battery pack.

> ⚠ **WARNING:**
> - *Power remains in the high voltage electrical system for 5 minutes after the HV battery pack is shut off.*
> - ***Never** touch, cut, or open any orange high voltage power cable or high voltage component.*
> - *Failure to follow these warnings can cause severe burns and electric shock that may result in death or serious injury.*

- Both positive and negative power cables ❷ are isolated from the metal chassis, so there is no possibility of shock by touching the metal chassis.

- A ground fault monitor ❹ continuously monitors for high voltage leakage to the metal chassis while the vehicle is running. If a malfunction is detected, the vehicle computer ❹ will illuminate the master warning light ⚠ in the instrument cluster and indicate "CHECK HYBRID SYSTEM" on the Multi-information Display.

- The HV battery pack relays will automatically open to stop electricity flow in a collision sufficient to activate the SRS or rear collision sensors.

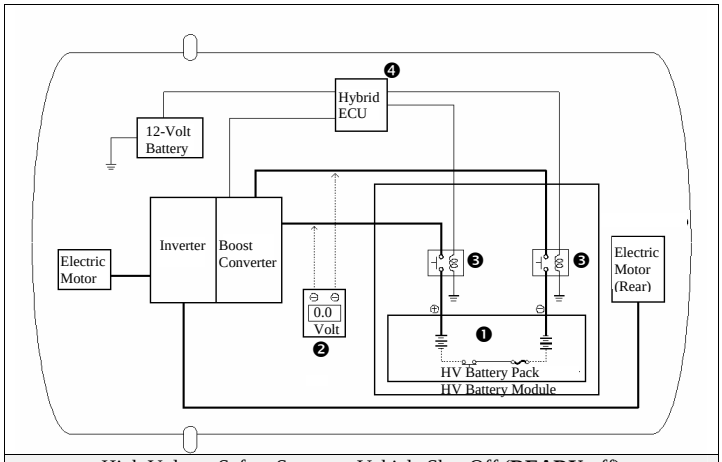

High Voltage Safety System – Vehicle Shut Off (**READY**-off)

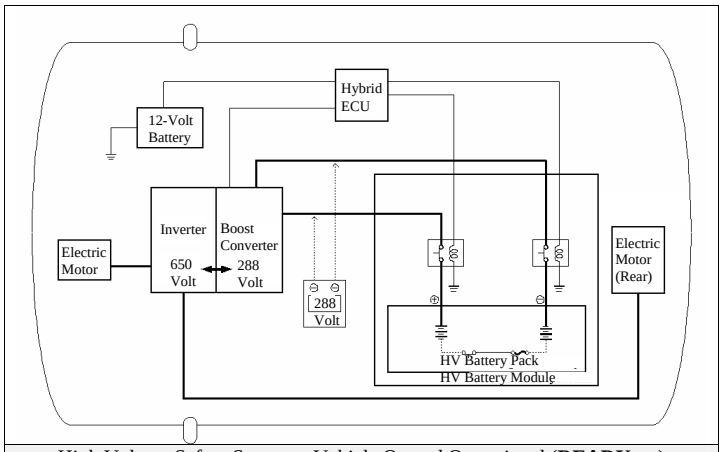

High Voltage Safety System – Vehicle On and Operational (**READY**-on)

Downloaded from www.Manualslib.com manuals search engine

High Voltage Safety (Continued)

The HV battery pack also powers a 288-Volt DC to 42-Volt DC converter for the assist motor in the electric power steering (EPS). This DC-DC converter is located under the cargo area ❶. Both positive and negative 42-Volt cables ❷ are contained within plastic yellow sheathing and are isolated from the metal vehicle chassis.

NOTE:
42-Volt DC has a higher arc potential than 12-Volt DC.

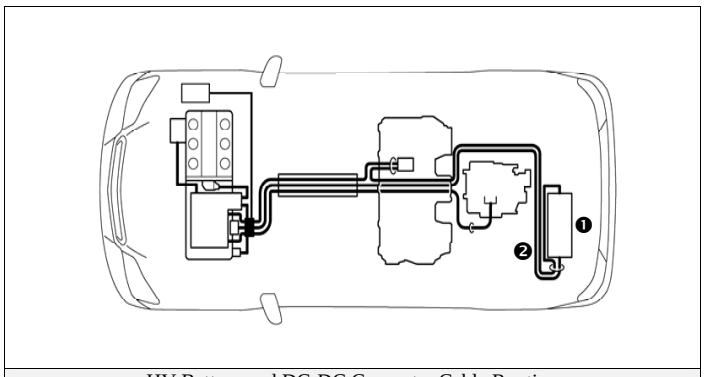

HV Battery and DC-DC Converter Cable Routing
Note: Positive and negative power cables shown bundled as a single line

Downloaded from www.Manualslib.com manuals search engine

SRS Airbags & Seat Belt Pretensioners

Standard Equipment

- Electronic frontal impact sensors (2) are mounted in the engine compartment ❶.
- Front seat belt pretensioners are mounted near the base of the B-pillar ❷.
- Frontal dual stage airbag for the driver ❸ is mounted in the steering wheel hub.
- Frontal dual stage airbag for the front passenger ❹ is integrated into the dashboard and deploys through the top of the dashboard.
- SRS computer ❺ is mounted on the floor pan underneath the center console. It also contains an impact sensor.
- Front electronic side impact sensors (2) are mounted near the base of the B-pillars ❻.
- Rear electronic side impact sensors (2) are mounted near the base of the C-pillars ❼.
- Front seat side impact airbags ❽ are mounted in the front seats.
- Side curtain airbags ❾ are mounted along the outer edge inside the roof rails.
- Driver knee airbag ❿ is mounted on the lower portion of the dash.

⚠ **WARNING:**

- *The SRS computer is equipped with a backup source that powers the SRS airbags up to **90 seconds** after disabling the vehicle.*
- *The front seat side airbags and the side curtain airbags may deploy independently of each other.*
- *The driver knee airbag deploys simultaneously with the driver frontal airbag and seat belt pretensioner.*
- *The front passenger occupant classification system may prohibit the deployment of the frontal passenger airbag, front passenger side airbag, and front passenger seat belt pretensioner.*
- *Failure to follow these warnings may result in death or serious injury from the sudden deployment of the SRS.*

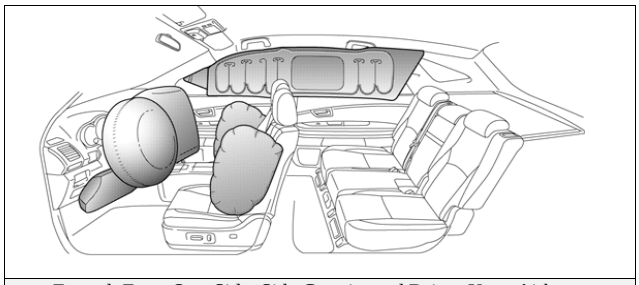

Frontal, Front Seat Side, Side Curtain, and Driver Knee Airbags.

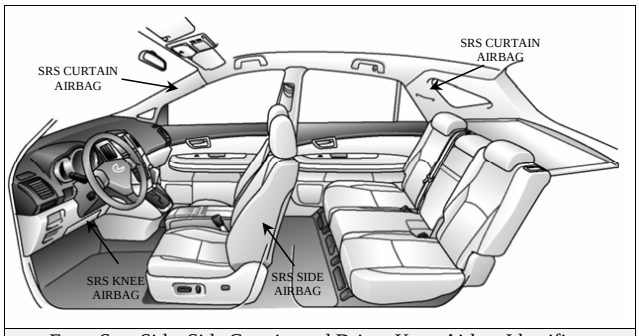

Front Seat Side, Side Curtain, and Driver Knee Airbag Identifiers

Downloaded from www.Manualslib.com manuals search engine

SRS Airbags & Seat Belt Pretensioners (Continued)

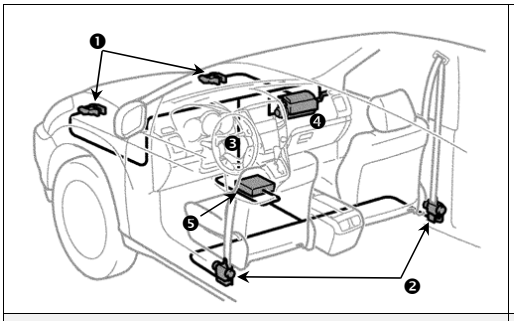

Standard Frontal Airbags and Seat Belt Pretensioners

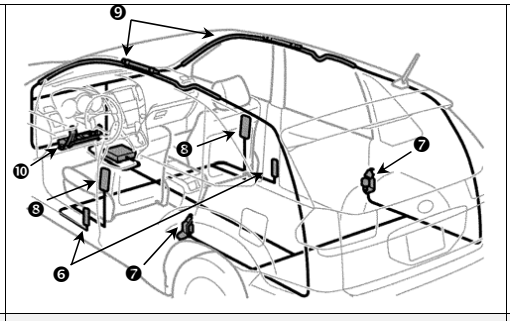

Front Seat, Side Curtain, and Knee Airbags

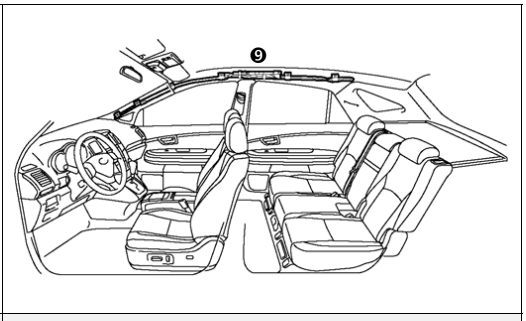

Side Curtain Airbag Inflator in Roof Rail

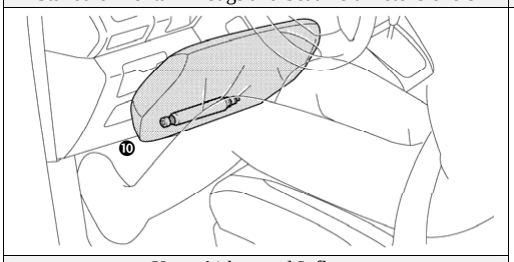

Knee Airbag and Inflator

Downloaded from www.Manualslib.com manuals search engine

Emergency Response

On arrival, emergency responders should follow their standard operating procedures for vehicle incidents. Emergencies involving the RX 400h may be handled like other automobiles except as noted in these guidelines for Extrication, Fire, Overhaul, Recovery, Spills, First Aid, and Submersion.

> ⚠ **WARNING:**
> - ***Never*** *assume the RX 400h is shut off simply because it is silent.*
> - *Always observe the instrument cluster for the* ***READY*** *indicator status to verify whether the vehicle is on or shut off.*
> - *Failure to follow these warnings may result in death or serious injury from the sudden deployment of the SRS or severe burns and electric shock from the high voltage electrical system.*

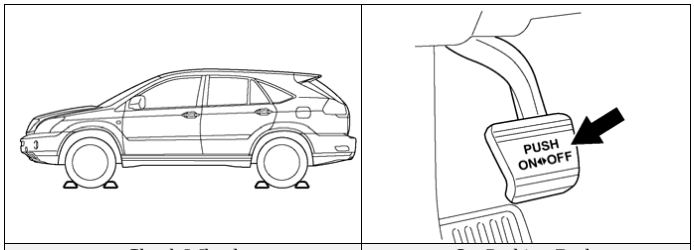

Chock Wheels

Set Parking Brake

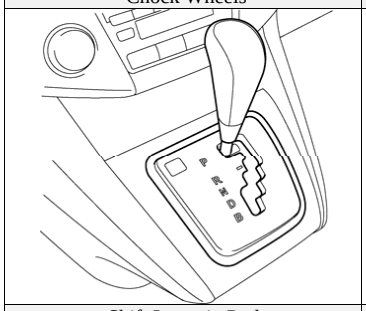

Shift Lever in Park

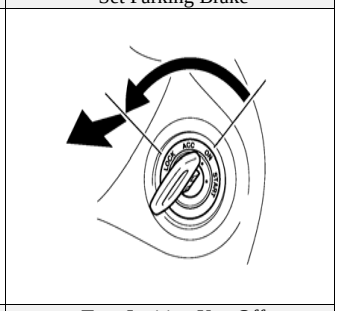

Turn Ignition Key Off

Extrication

- Immobilize Vehicle

  Chock wheels and set the parking brake.
  Move the shift lever to the **P** (Park) position.

- Disable Vehicle

  Performing either of the following two procedures will shut the vehicle off and disable the HV battery pack, SRS, and gasoline fuel pump.

  Procedure #1

  1. Turn the ignition key off.
  2. Remove the key and place on dash. If the key cannot be removed, disconnect the 12-Volt auxiliary battery in the engine compartment.

  NOTE:
  Before removing the key or disconnecting the 12-Volt auxiliary battery, reposition power seats and tilt/telescoping steering wheel, lower windows, open door locks and fuel door as required. Once the 12-Volt auxiliary battery is disconnected power controls will not operate.

Downloaded from www.Manualslib.com manuals search engine

Emergency Response (Continued)

Extrication (Continued)

Procedure #2 (Alternate if ignition key is inaccessible).

1. Disconnect the 12-Volt auxiliary battery in the engine compartment.
2. Remove engine compartment covers.
3. Remove the fuse box cover.
4. Remove the IGCT No. 4 fuse (10A Red colored) in the engine compartment junction block as illustrated. When in doubt, pull all four fuses in the fuse block.

⚠ WARNING:

- *After disabling the vehicle, power is maintained for 90 seconds in the SRS system and 5 minutes in the high voltage electrical system.*
- *If either of the disabling procedures above cannot be performed, proceed with caution as there is no assurance that the high voltage electrical system, SRS, or fuel pump are disabled.*
- ***Never** touch, cut, or open any orange high voltage power cable or high voltage component.*
- *Failure to follow these warnings may result in death or serious injury from the sudden deployment of the SRS or severe burns and electric shock from the high voltage electrical system.*

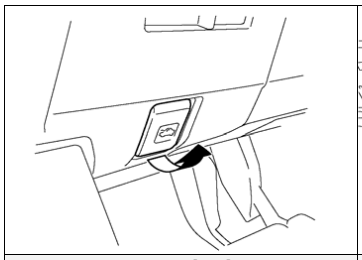

Remote Hood Release

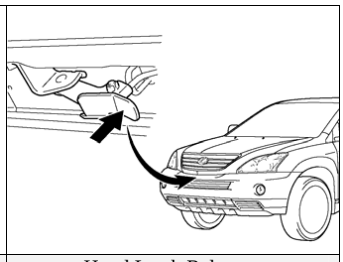

Hood Latch Release

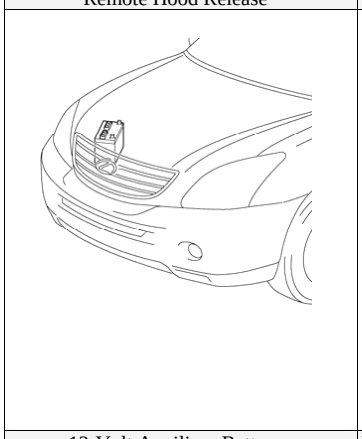

12-Volt Auxiliary Battery

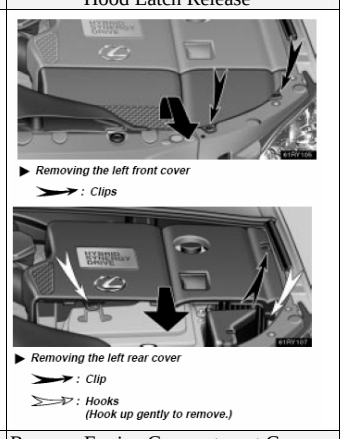

Remove Engine Compartment Covers

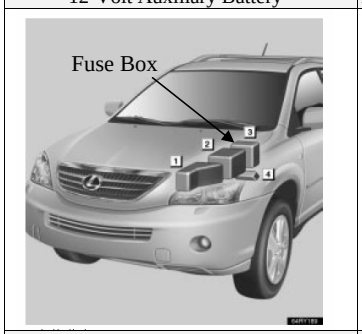

Fuse Box Location

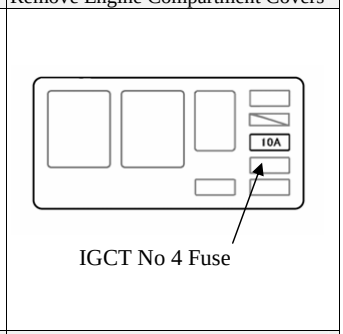

IGCT No.4 Fuse Location

Downloaded from www.Manualslib.com manuals search engine

Emergency Response (Continued)

Extrication (Continued)

- Stabilize Vehicle
  Crib at (4) points directly under the front and rear pillars.
  Do not place cribbing under the high voltage power cables, exhaust system, or fuel system.

- Access Patients
  Glass Removal
  Use normal glass removal procedures as required.

  SRS Awareness
  Responders need to be cautious when working in close proximity to undeployed airbags and seat belt pretensioners. Deployed front dual stage airbags automatically ignite both stages within a fraction of a second.

  Door Removal/Displacement
  Doors can be removed by conventional rescue tools such as hand, electric, and hydraulic. In certain situations, it may be easier to pry back the body to expose and unbolt the hinges.

  Roof Removal
  The vehicle contains side curtain airbags. If undeployed, it is not recommended to remove or to displace the roof. The side curtain airbags may be identified as illustrated.

  Dash Displacement
  The vehicle contains side curtain airbags. Do not remove or displace the roof during a dash displacement to avoid cutting into undeployed airbags or inflators. As an alternative, dash displacement may be performed by using a Modified Dash Roll.

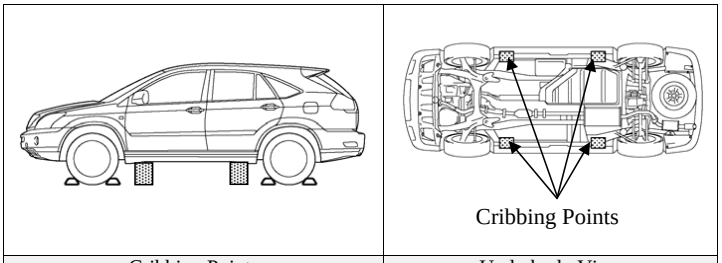

Cribbing Points | Underbody View

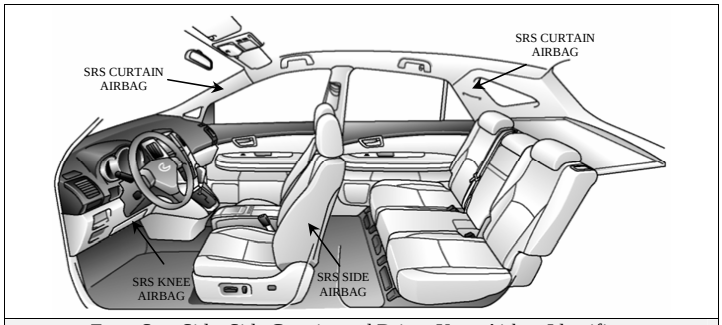

Front Seat Side, Side Curtain, and Driver Knee Airbag Identifiers

Downloaded from www.Manualslib.com manuals search engine

Emergency Response (Continued)

Extrication (Continued)

Rescue Lift Air Bags
Responders should not place cribbing or rescue lift airbags under the high voltage power cables, exhaust system, or fuel system.

Repositioning Steering Wheel and Seat
Power tilt/telescopic steering wheel and seat controls are shown in the illustrations.

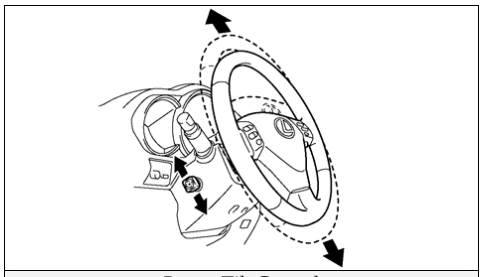

Power Tilt Control

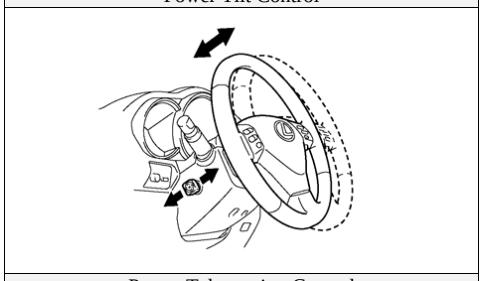

Power Telescoping Control

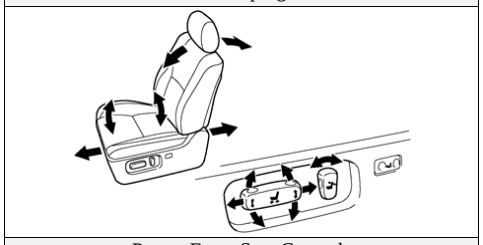

Power Front Seat Controls

Fire
Approach and extinguish a fire using proper vehicle fire fighting practices as recommended by NFPA, IFSTA, or the National Fire Academy (USA).

- Extinguishing Agent
  Water has been proven to be a suitable extinguishing agent.

- Initial Fire Attack
  Perform a fast, aggressive fire attack.
  Divert the runoff from entering watershed areas.
  Attack teams may not be able to identify a RX 400h until the fire has been knocked down and overhaul operations have commenced.

- Fire in the HV Battery Pack
  Should a fire occur in the NiMH HV battery pack, attack crews should utilize a water stream or fog pattern to extinguish any fire within the occupant cabin *except* for the HV battery pack.

⚠ **WARNING:**
- *Potassium hydroxide and sodium hydroxide are key ingredients in the NiMH battery module electrolyte.*
- *The modules are contained within a metal case and access is limited to duct openings under the rear seat.*
- *The HV battery cover should **Never** be breached or removed under any circumstances including fire.*
- *Failure to follow these warnings can cause severe burns and electric shock that may result in death or serious injury.*

Downloaded from www.Manualslib.com manuals search engine

Emergency Response (Continued)

Fire (Continued)

When allowed to burn themselves out, the RX 400h NiMH battery modules burn rapidly and can quickly be reduced to ashes except for the metal.

Offensive Fire Attack
Normally flooding the NiMH HV battery pack with copious amounts of water at a safe distance will effectively control the HV battery pack fire by cooling the adjacent NiMH battery modules to a point below their ignition temperature. The remaining modules on fire, if not extinguished by the water, will burn themselves out.

However, flooding the RX 400h HV battery pack is *not* recommended due to battery design and forward location preventing the responder from properly applying water through the available vent openings safely. It is recommended that the incident commander allow the RX 400h HV battery pack to burn itself out.

Defensive Fire Attack
If the decision has been made to fight the fire using a defensive attack, the fire attack crew should pull back a safe distance and allow the NiMH battery modules to burn themselves out. During this defensive operation, fire crews may utilize a water stream or fog pattern to protect exposures or to control the path of smoke.

Overhaul
During overhaul, immobilize and disable the vehicle if not already done. See illustrations on page 16.

- Immobilize Vehicle
  Chock wheels and set the parking brake.
  Move the shift lever to the P (Park) position.

- Disable Vehicle
  Performing either of the following two procedures will shut the vehicle off and disable the HV battery pack, SRS, and gasoline fuel pump.

Procedure #1
Turn the ignition key off.
1. Remove the key and place on dash.
2. If the key cannot be removed, disconnect the 12-Volt auxiliary battery in the engine compartment.

Procedure #2 (Alternate if ignition key is inaccessible).
1. Disconnect the 12-Volt auxiliary battery in the engine compartment.
2. Remove engine compartment covers.
3. Remove the fuse box cover.
4. Remove the IGCT No. 4 fuse (10A Red colored) in the engine compartment junction block. When in doubt, pull all four fuses in the fuse block.

⚠ **WARNING:**
- *After disabling the vehicle, power is maintained for 90 seconds in the SRS system and 5 minutes in the high voltage electrical system.*
- *If either of the disabling steps above cannot be performed, proceed with caution as there is no assurance that the high voltage electrical system, SRS, or fuel pump are disabled.*
- ***Never** touch, cut, or open any orange high voltage power cable or high voltage component.*
- *Failure to follow these warnings may result in death or serious injury from the sudden deployment of the SRS or severe burns and electric shock from the high voltage electrical system.*

Recovery/Recycling NiMH HV Battery Pack
Clean up of the HV battery pack can be accomplished by the vehicle recovery crew without further concern of runoff or spill. For information regarding recycling of the HV battery pack, contact the nearest Lexus dealer or Lexus Roadside Assistance at:

United States: (800) 255-3987, Canada: (800) 265-3987

Downloaded from www.Manualslib.com manuals search engine

Emergency Response (Continued)

Spills

The RX 400h contains the same common automotive fluids used in other Lexus vehicles, with the exception of NiMH electrolyte used in the HV battery pack. The NiMH battery electrolyte is a caustic alkaline (pH 13.5) that is damaging to human tissues. The electrolyte, however, is absorbed in the cell plates and will not normally spill or leak out even if a battery module is cracked. A catastrophic crash that would breach both the metal battery pack case and the metal battery module would be a rare occurrence.

Similar to using baking soda to neutralize a lead-acid battery electrolyte spill, a dilute boric acid solution or vinegar is used to neutralize a NiMH battery electrolyte spill.

In an emergency, Lexus Material Safety Data Sheets (MSDS) are available by contacting:

United States: CHEMTREC at (800) 424-9300
Canada: CANUTEC at *666 or (613) 996-6666 (collect)

- Handle NiMH Electrolyte Spills Using The Following Personal Protective Equipment (PPE):
  Splash shield or safety goggles. Fold down helmet shields are not acceptable for acid or electrolyte spills.
  Rubber, latex or Nitrile gloves.
  Apron suitable for alkaline.
  Rubber boots.

- Neutralize NiMH Electrolyte
  Use a boric acid solution or vinegar.
  Boric acid solution - 800 grams boric acid to 20 liters water or 5.5 ounces boric acid to 1 gallon of water.

First Aid

Emergency responders may not be familiar with a NiMH electrolyte exposure when rendering aid to a patient. Exposure to the electrolyte is unlikely except in a catastrophic crash or through improper handling. Utilize the following guidelines in the event of exposure.

⚠ **WARNING:**
The NIMH battery electrolyte is a caustic alkaline (pH 13.5) that is damaging to human tissues. Wear proper personal protective equipment to avoid coming into contact with the electrolyte.

- Wear Personal Protective Equipment (PPE)
  Splash shield or safety goggles. Fold down helmet shields are not acceptable for acid or electrolyte spills.
  Rubber, latex or Nitrile gloves.
  Apron suitable for alkaline.
  Rubber boots.

- Absorption
  Perform gross decontamination by removing affected clothing and properly disposing of the garments.
  Rinse the affected areas with water for 20 minutes.
  Transport to the nearest emergency medical care facility.

- Inhalation in Non-Fire Situations
  No toxic gases are emitted under normal conditions.

- Inhalation in Fire Situations
  Toxic gases are given off as the by-product of combustion. All responders in the Hot Zone should wear the proper PPE for fire fighting including SCBA.
  Move a patient from the hazardous environment to a safe area and administer oxygen.
  Transport to the nearest emergency medical care facility.

- Ingestion
  Do not induce vomiting.
  Allow a patient to drink large quantities of water to dilute electrolyte (Never give water to an unconscious person).
  If vomiting occurs spontaneously, keep the patient's head lowered and forward to reduce the risk of asphyxiation.
  Transport to the nearest emergency medical care facility.

Downloaded from www.Manualslib.com manuals search engine

Emergency Response (Continued)

Submersion

Handle an RX 400h that is fully or partially submerged in water by disabling the HV battery pack, SRS, and gasoline fuel pump.

- Remove vehicle from the water.
- Drain water from the vehicle if possible.
- Follow the immobilizing and disabling procedures on page 15.

Downloaded from www.Manualslib.com manuals search engine

Roadside Assistance

Lexus RX 400h roadside assistance may be handled like conventional Lexus vehicles except as noted in the following pages.

Lexus Roadside Assistance is available during the basic warranty period by contacting:

United States: (800) 255-3987, Canada: (800) 265-3987

Shift Lever

Similar to most Lexus vehicles, the RX 400h uses a gated shift lever as shown in the illustration. However, the RX 400h shift lever includes a motor brake **B** position for high load regenerative braking when decelerating down a steep grade.

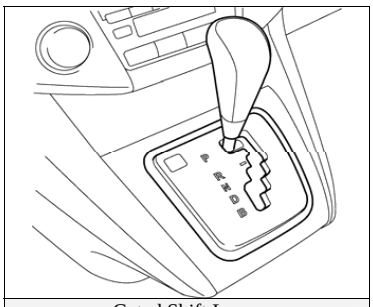

Gated Shift Lever

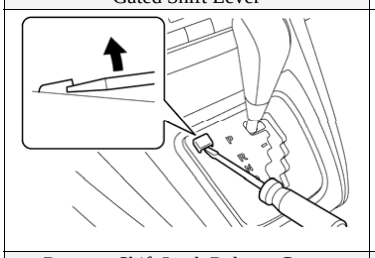

Remove Shift Lock Release Cover

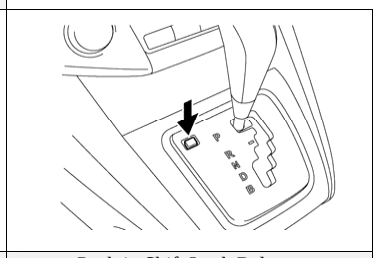

Push in Shift Lock Release

Towing

- A 4WD RX 400h must be towed with all 4 wheels off the ground.
- Do not tow the vehicle with 4 wheels on the ground. This may cause serious damage to the vehicle.
- The vehicle may be shifted out of **P**ark into **N**eutral by turning the ignition-on, depressing the brake, then moving the gated shift lever to N.
- If the shift lever cannot be moved out of **P** (Park), a shift lock release button is provided near the shift lever as shown in the illustration.

Downloaded from www.Manualslib.com manuals search engine

Roadside Assistance (Continued)

Electric Back Door Opener
The RX 400h is equipped with an electric back door opener. In the event of 12-Volt power loss, the door can only be opened with the manual release located on the inside, bottom of the door.

Electric Fuel Door Opener
The RX 400h is equipped with an electric fuel door opener. In the event of 12-Volt power loss, the fuel door can only be opened with the manual release located inside the cargo area.

Spare Tire
The jack and tools are provided in the cargo area as illustrated. The spare tire is fixed by the carrier underneath, outside the cargo area.

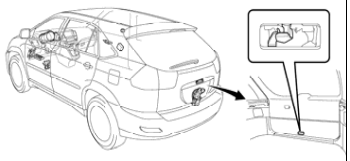	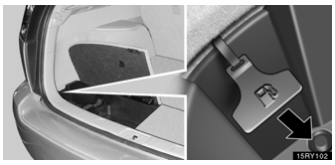
Manual Back Door Release	Manual Fuel Door Release
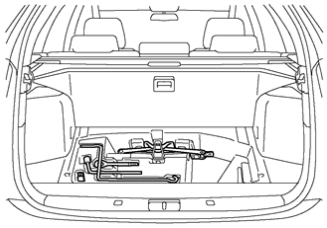	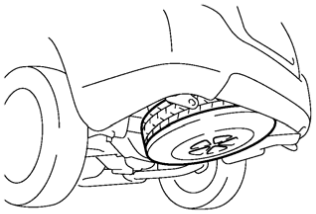
Tools in Cargo Area	Spare Tire Under Cargo Area

Downloaded from www.Manualslib.com manuals search engine

Roadside Assistance (Continued)

Jump Starting

The 12-Volt auxiliary battery may be jump started if the vehicle does not start and the instrument cluster gauges are dim or off after turning the ignition key to “START.”

The 12-Volt auxiliary battery is located in the engine compartment. The jump starting procedure is the same as for other Lexus vehicles.

- Connect the positive jumper cable to the positive battery post.
- Connect the negative terminal to the ground nut.
- The high voltage HV battery pack cannot be jump started.

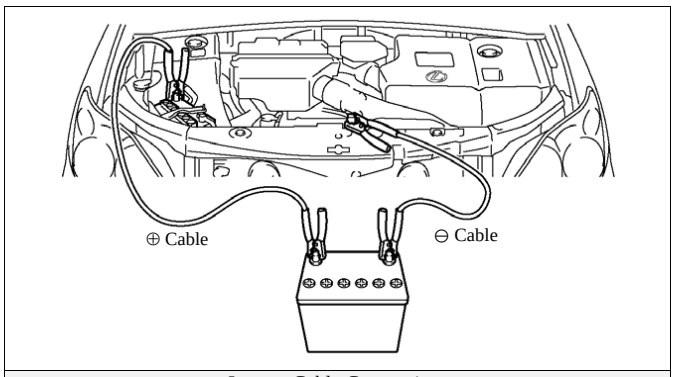

Jumper Cable Connections

Immobilizer & Anti-Theft Alarm

The vehicle has an electronic key immobilizer system and anti-theft alarm as standard equipment. The vehicle may only be started with a learned immobilizer coded key.

To disarm the Anti-Theft Alarm:

- Unlock the door using an ignition key or wireless remote control.
- Turn the ignition switch on.

Downloaded from www.Manualslib.com manuals search engine