Technical training.
Product information.

G30 Chassis and Suspension

cardiagn.com

Edited for the U.S. market by:
BMW Group University
Technical Training
ST1604 11/1/2016

BMW Service

General information

Symbols used

The following symbol is used in this document to facilitate better comprehension or to draw attention to very important information:

⚠

Contains important safety information and information that needs to be observed strictly in order to guarantee the smooth operation of the system.

Information status and national-market versions

BMW Group vehicles meet the requirements of the highest safety and quality standards. Changes in requirements for environmental protection, customer benefits and design render necessary continuous development of systems and components. Consequently, there may be discrepancies between the contents of this document and the vehicles available in the training course.

This document basically relates to the European version of left hand drive vehicles. Some operating elements or components are arranged differently in right-hand drive vehicles than shown in the graphics in this document. Further differences may arise as the result of the equipment specification in specific markets or countries.

Additional sources of information

Further information on the individual topics can be found in the following:

- Owner's Handbook
- Integrated Service Technical Application.

Contact: conceptinfo@bmw.de

©2016 BMW AG, Munich

Reprints of this publication or its parts require the written approval of BMW AG, Munich.

The information contained in this document forms an integral part of the BMW Group Technical Qualification and is intended for the trainer and participants in the seminar. Refer to the latest relevant information systems of the BMW Group for any changes/additions to the technical data.

Information status: **August 2016**
Technical training.

cardiagn.com

G30 Chassis and Suspension

Contents

1. Introduction **1**
- 1.1. History 1
- 1.2. Overview of system descriptions 1
- 1.3. Comparison of G12 chassis and suspension with G30 2
- 1.4. Comparison of F10 chassis and suspension with G30 3
- 1.5. Overview of chassis and suspension 4
  - 1.5.1. Highlights 5

2. Axles **8**
- 2.1. Front axle 8
  - 2.1.1. Notes for Service 9
- 2.2. Rear axle 11
  - 2.2.1. Notes for Service 13

3. Brakes **16**
- 3.1. Service brakes 18
  - 3.1.1. Pedal mechanism mounting 18
  - 3.1.2. Front brake 20
  - 3.1.3. Rear brakes 22
  - 3.1.4. M Sport brake 23
- 3.2. Parking brake 24

4. Wheels/Tires **25**
- 4.1. Wheel hub 25
- 4.2. Tire pressure control 26
  - 4.2.1. Warnings 26
  - 4.2.2. Notes for Service 28
- 4.3. Tire pressures 28
  - 4.3.1. Cold Tire pressure 29
  - 4.3.2. Warm Tire pressure 29
- 4.4. Electronic tire pressure label 30
  - 4.4.1. Technical functional description 30
  - 4.4.2. System overview 33
  - 4.4.3. Operation 34
  - 4.4.4. Tire selection: special sizes 40
  - 4.4.5. Tire pressure loss display 41
  - 4.4.6. Teaching-in the tire pressures 42
  - 4.4.7. Measurement of the tire air temperatures when stationary 43

5. Driving Stability Control **47**
- 5.1. Dynamic Stability Control (DSC) 50

cardiagn.com

G30 Chassis and Suspension

Contents

5.1.1. Functions 51
5.2. Steering 52
5.2.1. Overview of equipment specifications 53
5.2.2. Steering wheels 55
5.2.3. Steering column adjustment 55
5.3. Electric Active Roll Stabilization (EARS) 56
5.3.1. System wiring diagram for the voltage supply 58
5.3.2. Current flow 60

cardiagn.com

G30 Chassis and Suspension

1. Introduction

The development code for the new 7th generation BMW 5 Series is G30. The G30 will be available starting in early 2017.

1.1. History

Historical overview of the BMW 5 Series

Index	Development code
1	E12 (1972–1981)
2	E28 (1981–1987)
3	E34 (1987–1995)
4	E39 (1995–2003)
5	E60 (2003–2010)
6	F10 (2010–2016)
7	G30 (production starts in late 2016 as a 2017 MY vehicle)

1.2. Overview of system descriptions

Many of the systems used are already known from the current BMW 7 Series G12. The “Comparison of G12 with G30” chapter lists the common elements and the differences. The explanations of the systems already familiar from the G12 are kept brief. Comprehensive system descriptions can be found in the G12 Technical Reference Manual for “ST1501 G12 Complete Vehicle”.

Topic	“ST1501 G12 Complete Vehicle”
Service brakes	G12 Chassis and Suspension
Parking brake	G12 Chassis and Suspension
Tire Pressure Control	G12 Chassis and Suspension
Dynamic Stability Control (DSC)	G12 Chassis and Suspension
Steering	G12 Chassis and Suspension
Electronic Damper Control (EDC)	G12 Chassis and Suspension
Conventional anti-roll bar	G12 Chassis and Suspension
Electric Active Roll Stabilization (EARS)	G12 Chassis and Suspension

cardiagn.com

G30 Chassis and Suspension

1. Introduction

1.3. Comparison of G12 chassis and suspension with G30

Some of the systems used in the G30 have already been introduced in the G12. The following table provides an overview of the differences and common features between the two vehicles.

System	G12	G30
Front axle	Double-wishbone front axle	Double-wishbone front axle
Front suspension	Air spring	Steel springs
Front damping	Electronic Damper Control (EDC)	Conventional shock absorber or Electronic Damper Control (EDC)
Anti-roll bar, front	Conventional anti-roll bar or electrical active stabilizer (EARSV)	Conventional anti-roll bar or electrical active stabilizer (EARSV)
Rear axle	Five-link rear suspension	Five-link rear suspension
Rear suspension	Air spring	Steel springs
Rear damping	Electronic Damper Control (EDC)	Conventional shock absorber or Electronic Damper Control (EDC)
Rear anti-roll bar	Conventional anti-roll bar or electrical active stabilizer (EARSH)	Conventional anti-roll bar or electrical active stabilizer (EARSH)
Centering mounting for rear axle support	Yes Special tools required	No
Front brake	Partially bonded brake pads	Partially bonded brake pads
Rear brakes	Combined brake caliper (electric parking brake)	Combined brake caliper (electric parking brake)
Electric parking brake control unit	Integrated into the DSC control unit	Integrated into the DSC control unit
Brake pad wear sensor	Single stage	Single stage
Wheel hub	66.5 mm	66.5 mm
Hole pattern	5 x 112	5 x 112
Tire pressure control	Tire pressure control (Schrader)	Tire pressure control (Schrader)
Tire pressure label	Label	Label and electronic
Front steering	Electronic Power Steering (EPS) or Integral Active Steering (with variable rack geometry)	Electronic Power Steering (EPS) or Integral Active Steering (with variable rack geometry)
Rear steering*	Rear axle slip angle control (HSR)	Rear axle slip angle control (HSR)

* Only available in conjunction with the Integral Active Steering optional equipment.

cardiagn.com

G30 Chassis and Suspension

1. Introduction

1.4. Comparison of F10 chassis and suspension with G30

System	F10	G30
Front axle	Double-wishbone front axle	Double-wishbone front axle
Front suspension	Steel springs	Steel springs
Front damping	Conventional shock absorber or Electronic Damper Control (EDC)	Conventional shock absorber or Electronic Damper Control (EDC)
Anti-roll bar, front	Conventional anti-roll bar or hydraulic active stabilizer (ARS)	Conventional anti-roll bar or electrical active stabilizer (EARSV)
Rear axle	Integral V rear axle	Five-link rear suspension
Rear suspension	Steel springs	Steel springs
Rear damping	Conventional shock absorber or Electronic Damper Control (EDC)	Conventional shock absorber or Electronic Damper Control (EDC)
Rear anti-roll bar	Conventional anti-roll bar or hydraulic active stabilizer (ARS)	Conventional anti-roll bar or electrical active stabilizer (EARSH)
Centering mounting for rear axle support	Yes	Yes
Front brake	Greased pad backing plate	Partially bonded brake pads
Rear brakes	Combined brake caliper (electric parking brake)	Combined brake caliper (electric parking brake)
Electric parking brake control unit	Separate (EMF)	Integrated into the DSC control unit
Brake pad wear sensor	single stage	single stage
Wheel hub	72.5 mm	66.5 mm
Hole pattern	5 x 120	5 x 112
Tire pressure control	TPMS Run Flat Indicator (indirect)	RDCi Tire pressure control (direct)
Tire pressure label	Label	Label and electronic
Steering	Electrical and hydraulic or Integral Active Steering (with variable ratio rack)	Electronic Power Steering EPS or Integral Active Steering (with variable rack geometry)
Rear steering*	Rear axle slip angle control (HSR)	Rear axle slip angle control (HSR)

* Only available in conjunction with the Integral Active Steering optional equipment.

cardiagn.com

G30 Chassis and Suspension

1. Introduction

1.5. Overview of chassis and suspension

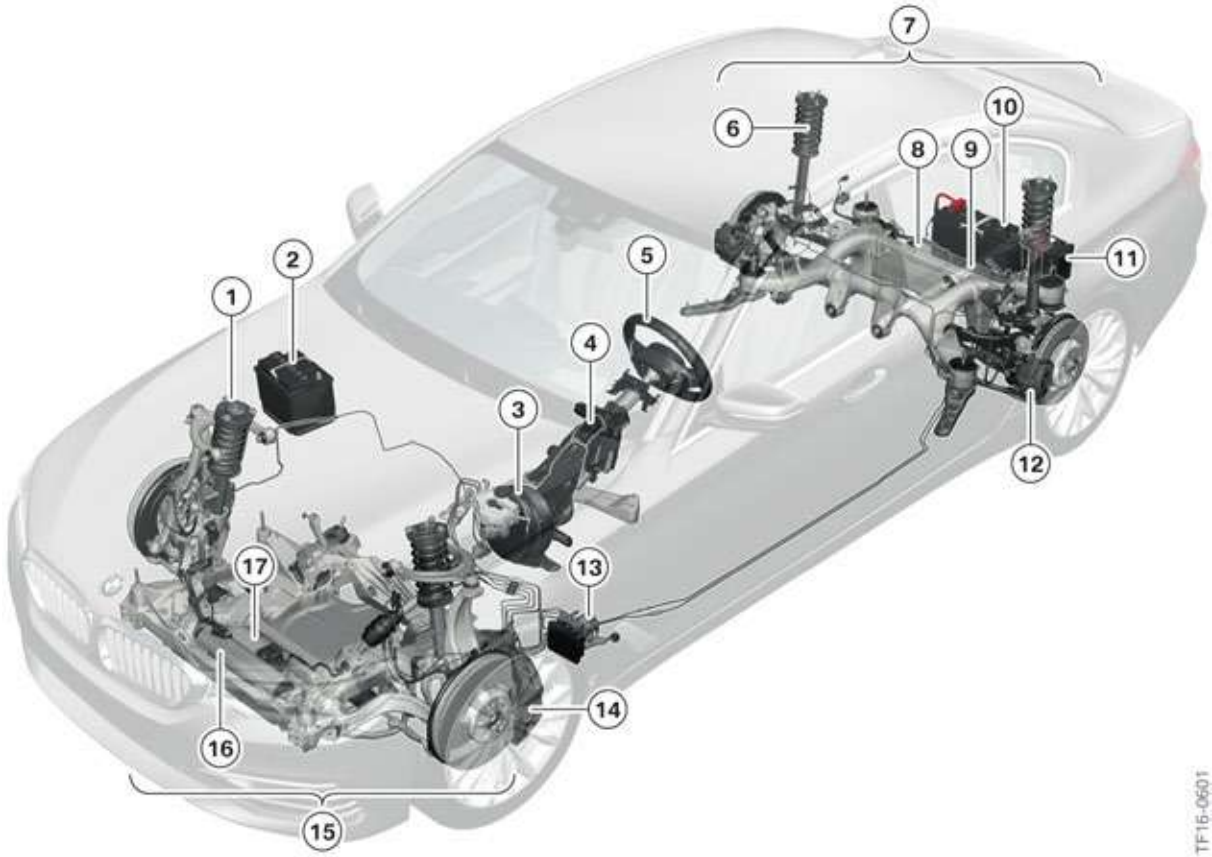

Overview of chassis and suspension in the G30

Index	Explanation
1	Front axle spring strut
2	Auxiliary battery in the engine compartment (optional equipment)
3	Brake servo
4	Steering column
5	Steering wheel
6	Rear axle spring strut
7	Five-link rear suspension
8	Rear axle slip angle control (HSR) (optional equipment)
9	Electric active roll stabilization rear (EARSH) (optional equipment)
10	Battery
11	Auxiliary battery for 24 V steering
12	Disc brake with electric parking brake on the rear axle
13	Dynamic Stability Control (DSC)

cardiagn.com

G30 Chassis and Suspension

1. Introduction

Index	Explanation
14	Disc brake for front axle
15	Double-wishbone front axle
16	Electric active roll stabilization front (EARSV) (optional equipment)
17	Electromechanical Power Steering (EPS)

The basic chassis on the G30 differs from the F10 by its enhanced dynamics with no loss of comfort. The critical contributions to enhancing comfort were achieved by optimization of the vehicle axles.

The G30 has 1, 2 or 3 batteries depending on the equipment specification.

G30	530i	
Technical data	**Rear-wheel drive**	**xDrive**
Wheelbase	2975 mm	2975 mm
Turning circle	12.05 m	12.22 m
Ground clearance	144 mm	139 mm
Vehicle US curb weight in kg / lbs	1699 kg / 3746 lbs	1759 kg / 3878 lbs

1.5.1. Highlights

The following optional equipment is available in addition to the basic chassis and suspension:

- M sports suspension (OE 704)
- M sport package (OE 337)
- Dynamic damper control (EDC) (OE 223)
- Integral Active Steering (OE 2VH)
- Adaptive Drive (OE 2VA) only available in the 540i and 540i xDrive
- Adaptive M Suspension (OE 2VF) only available in the M550i xDrive

All items of optional equipment are available for all drive variants (including xDrive).

cardiagn.com

G30 Chassis and Suspension

1. Introduction

The following table shows the different equipment specifications in the area of the chassis and suspension.

Systems	Basic chassis and suspension	Integral Active Steering	Dynamic damper control (EDC)	Adaptive Drive
Electronic Power Steering (EPS)	●			
EPS with variable rack geometry		●		
Rear axle slip angle control (HSR)		●		
Dynamic damper control (EDC)			●	●
Conventional anti-roll bar on front axle	●			
Conventional anti-roll bar on rear axle	●			
Electric active roll stabilization front (EARSV)				●
Electric active roll stabilization rear (EARSH)				●
Vertical acceleration sensors				●
Auxiliary battery in the engine compartment (12 V)				●

BMW M550i vehicles

The “Adaptive M Suspension” optional equipment can only be ordered with the BMW M550i drive variant.

Model	Adaptive Drive	Adaptive M Suspension
530i		
540i	●	
M550i		●

cardiagn.com

G30 Chassis and Suspension

1. Introduction

The table below shows the differences between the “Adaptive Drive” and “Adaptive M Suspension” optional equipment.

Systems	Adaptive Drive	Adaptive M Suspension
EPS with variable rack geometry		●
Rear axle slip angle control (HSR)		●
Dynamic damper control (EDC)	●	●
Electric active roll stabilization front (EARSV)	●	●
Electric active roll stabilization rear (EARSH)	●	●
Vertical acceleration sensors	●	●
Auxiliary battery in the engine compartment (12 V)	●	●
10 mm lowering		●

By contrast with all the other chassis variants, the Electronic Damper Control (EDC) is combined with a 10 mm lowering in the "M Dynamic Professional" optional equipment.

cardiagn.com

G30 Chassis and Suspension

2. Axles

2.1. Front axle

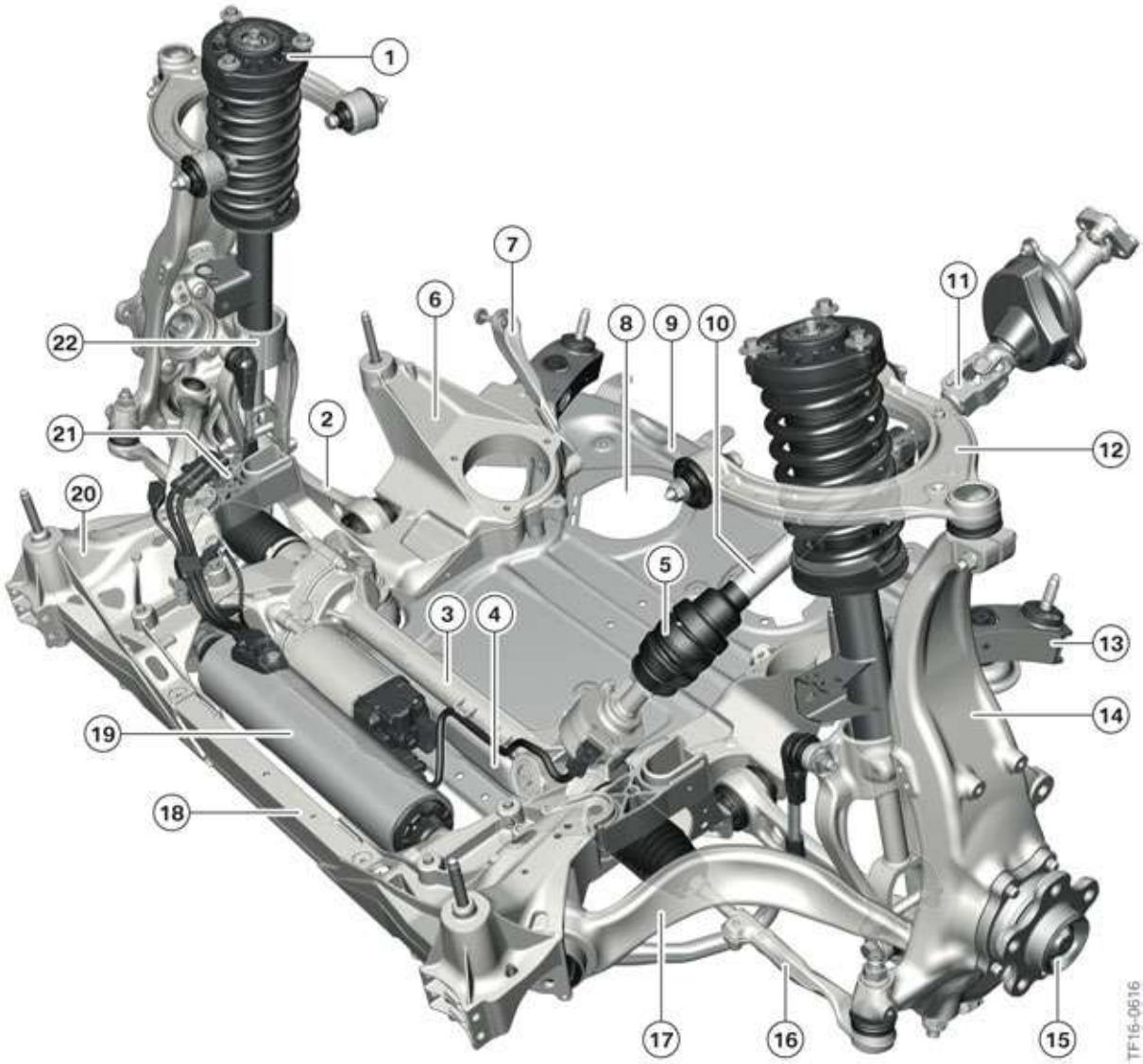

Double-wishbone front axle in the G30

Index	Explanation
1	Support bearing
2	Wishbone, lower
3	Steering box
4	Cross member
5	Universal joint of steering shaft to steering gear
6	Cast side section
7	Strut

cardiagn.com

Index	Explanation
8	Service opening
9	Rear stiffening label
10	Steering shaft
11	Universal joint of steering shaft to steering column
12	Triangle wishbone, top
13	Side member
14	Swivel bearing
15	Wheel bearing unit
16	Track rod end
17	Trailing link
18	Transverse tube
19	Electric active roll stabilization at the front (EARSV) (optional equipment)
20	Cast corner
21	Cast corner connection
22	Spring strut holder

The double wishbone front axle offers the following advantages:

- Lower wishbone level broken down into tension strut and wishbone.
- Outstanding driving dynamics, high agility thanks to high achievable lateral acceleration.
- Outstanding roll stabilization when cornering without any reduction in ride comfort.
- High comfort due to minimum influence of disturbance variables.
- High comfort thanks to shock absorbers that are practically free of lateral forces.
- Smooth, good spring response of the axle and good directional stability.

Since the wheel guide is taken care of by the two wishbone planes, practically no more lateral forces act on the shock absorber. Because of the lower friction that results from this, the shock absorber can react sensitively to irregularities in the road surface. The piston rod can be made thinner because of the freedom from lateral forces, which means that the friction in the shock absorber is reduced resulting in a more similar displacement volume in the traction and compression directions for the shock absorber. This is important for the use of an electronically adjustable shock absorber system.

The front axle is almost entirely made of aluminium, which helps with axle-load distribution and the vehicle weight.

The steering gear can be easily removed for repair if needed. Time-consuming dismantling of the front axle is unnecessary.

2.1.1. Notes for Service

The following table shows when wheel alignment is necessary on the front axle when a component is replaced.

cardiagn.com

G30 Chassis and Suspension

2. Axles

Replacement of a component on the front axle	Wheel alignment required
Front axle support	YES
Steering rack	YES
Wishbone, lower	YES
Rubber mount for wishbone, lower	YES
Trailing link	NO
Rubber mount for trailing link	NO
Triangle wishbone, top	NO
Rubber mount for top wishbone	NO
Track rod	YES
Swivel bearing	YES
Wheel bearing	NO
Spring strut	NO
Support bearing	NO

The following table shows when wheel alignment is necessary on the front axle when a component is removed.

Undoing the screw connection at the front axle	Wheel alignment required
Front axle support to body	NO
Steering box to front axle support	YES
Bottom wishbone to front axle support	YES
Bottom wishbone to swivel bearing	NO
Trailing link to front axle support	NO
Trailing link to swivel bearing	NO
Top wishbone to body	NO
Top wishbone to swivel bearing	NO
Track rod to steering box	NO
Track rod end to track rod	YES
Track rod end to swivel bearing	NO
Spring strut to bottom wishbone	NO
Support bearing to body	NO
Bottom steering shaft to steering box	NO
Upper steering shaft to steering column	NO

cardiagn.com

G30 Chassis and Suspension

2. Axles

2.2. Rear axle

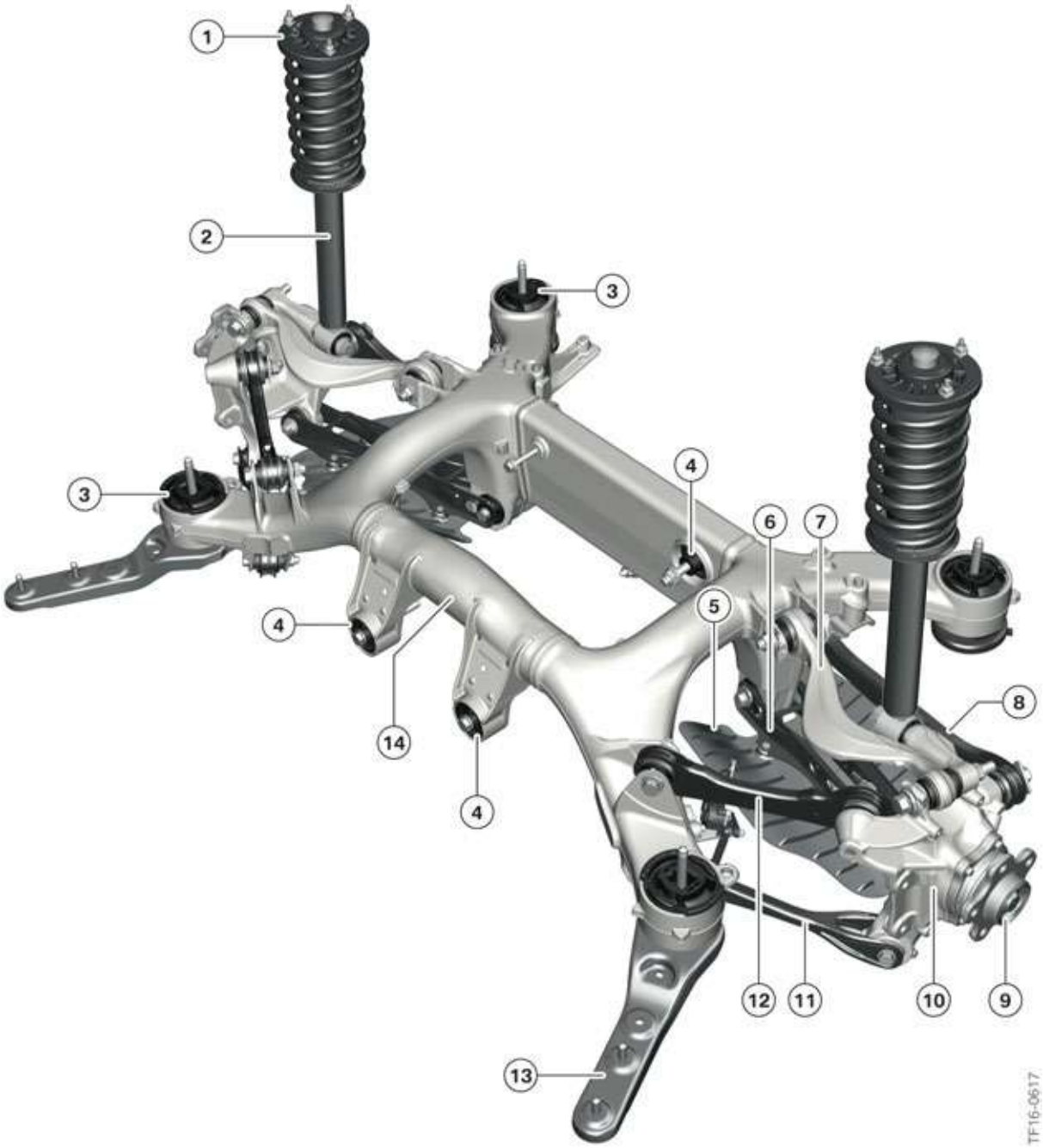

Five-link rear axle in the G30

cardiagn.com

G30 Chassis and Suspension

2. Axles

Index	Explanation
1	Support bearing
2	Shock absorber
3	Rubber mount of the rear axle support on the body
4	Rubber mount of the rear axle support on the rear axle differential
5	Air deflector
6	Camber control arm
7	Wishbone
8	Camber link
9	Wheel bearing unit
10	Wheel carrier
11	Trailing arm
12	Control arm
13	Compression strut
14	Axle support

The five-link rear axle is characterized by precise wheel guidance with outstanding driving dynamics. This is particularly noticeable with respect to the following characteristics:

- Directional stability, target precision
- Load transfer characteristics
- Self-steering response
- Lane changing stability
- Transient handling characteristics (cornering/straight-ahead driving)

It has been possible to substantially reduce the conflict between the goals of driving dynamics and comfort by implementing the following measures:

- Double-elastic mounting.
  Rubber mounts between rear axle differential, rear axle support and body.
- Preload-reduced rear axle mounts.
  Lower torsion stress on the rear axle bearings thanks to spring struts positioned wide to the outside.
- Large support area for the rear axle support.
- Low unsprung mass thanks to innovative sheet steel wishbone technology in conjunction with aluminium forged wishbones and aluminium-wheel carriers.

The large support for the rear axle support and the preload-reduced axle construction are of great significance for the outstanding driving dynamics on the one hand and for acoustic decoupling on the other hand. This makes it possible to install powerful, high-torque engines and to reduce the introduction of road noise into the vehicle.

cardiagn.com

It has been possible to produce the various wishbones, with the exception of the upper wishbone, in a sheet steel design. Sheet steel wishbones offer similar weight advantages to aluminium forged wishbones, but are cheaper to produce. They are always used when a simple mounting geometry is used (straight wishbones). The top wishbone has been manufactured as an aluminium forged wishbone because of its more complex design.

Replacement of the rubber mounts on sheet steel wishbones as a service operation is not permitted. The entire wishbone must be replaced in the event of wear to a rubber mount.

2.2.1. Notes for Service

The following table shows when wheel alignment is necessary on the rear axle when a component is replaced.

Replacement of a component on the rear axle	Wheel alignment required
Rear axle support	YES
Rubber mount for rear axle support	YES
Camber control arm	YES
Camber link	YES
Trailing arm	YES
Wishbone	YES
Ball joint in the wheel carrier	YES
Control arm	YES
Wheel carrier	YES
Wheel bearing	NO
Spring strut	NO
Support bearing	NO

The following table shows when wheel alignment is necessary on the rear axle when a component is undone.

Undoing a component on the rear axle	Wheel alignment required
Rear axle support to body	YES
Front compression strut to body	NO
Camber link to rear axle support	YES
Camber control arm to wheel carrier	YES
Camber link to rear axle support	YES
Camber link to wheel carrier	NO
Trailing arm to rear axle support	YES

cardiagn.com

Undoing a component on the rear axle	Wheel alignment required
Trailing arm to wheel carrier	YES
Control arm to rear suspension subframe	YES
Control arm to hub carrier	NO
Wishbone to rear axle support	NO
Wishbone to wheel carrier	NO
Spring strut to wheel carrier	NO
Support bearing to body	NO

Rear axle positioning

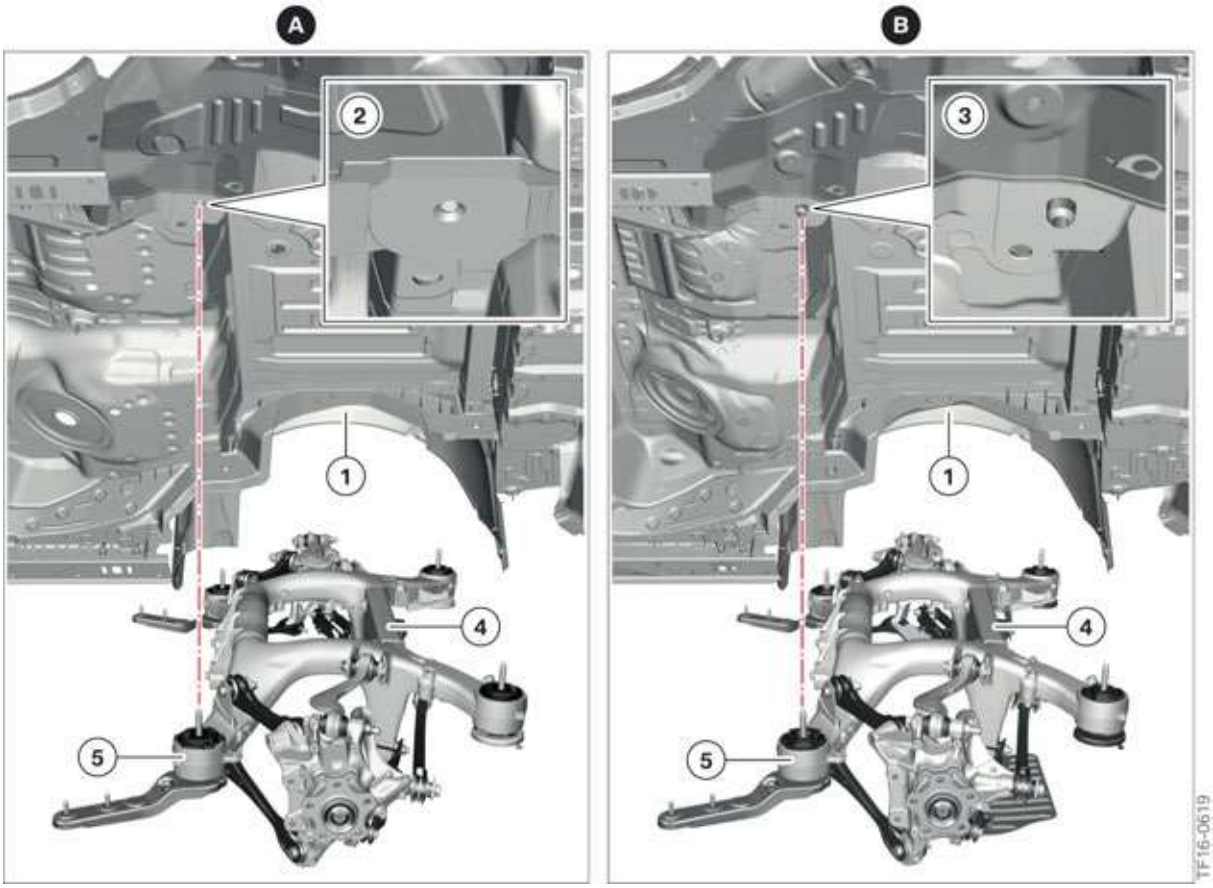

Comparison of rear axle on the G12 with the G30

cardiagn.com

G30 Chassis and Suspension

2. Axles

Index	Explanation
A	Rear axle of the G12
B	Rear axle of the G30
1	Body
2	Mounting for rear axle support
3	Centering mounting for rear axle support
4	Rear axle support
5	Rubber mount of the rear axle support

On the G12, no centering mounting dowels are fitted on the body for alignment of the rear axle. A new special tool was used to align the thrust angle when installing the rear axle support.

The centering mounting dowels are used on the G30. No special tool is required for installing the rear axle support.

cardiagn.com

G30 Chassis and Suspension

3. Brakes

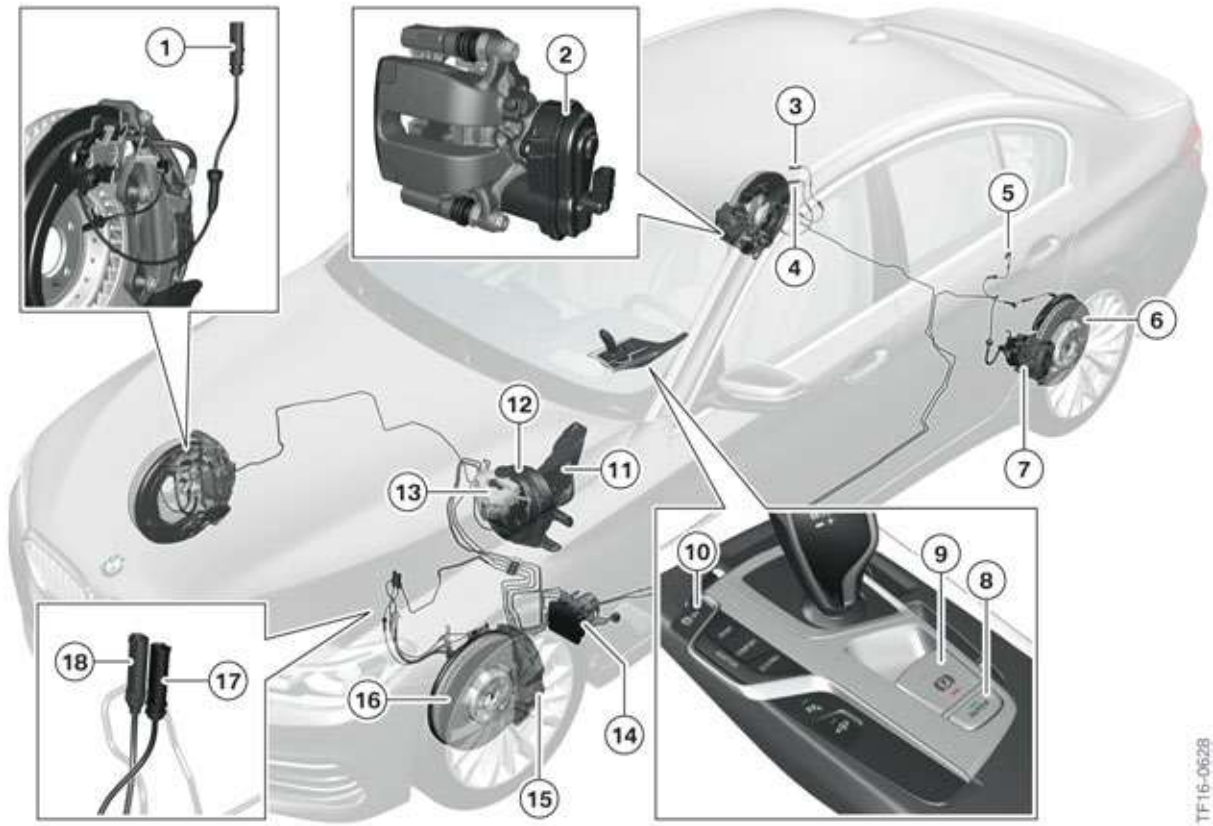

Overview of the brake system on the G30

Index	Explanation
1	Wheel speed sensor connector, front right
2	Electric parking brake actuator
3	Brake pad wear sensor connector, rear right (single-stage)
4	Wheel speed sensor connector, rear right
5	Wheel speed sensor connector, rear left
6	Brake disc, rear
7	Brake caliper, rear
8	Automatic-hold button
9	Button for electric parking brake
10	DSC button
11	Pedal mechanism
12	Brake servo
13	Expansion tank
14	DSC unit

cardiagn.com

G30 Chassis and Suspension

3. Brakes

Index	Explanation
15	Brake caliper, front left
16	Brake disc, front left
17	Brake pad wear sensor connector, front left
18	Wheel speed sensor connector, front left

cardiagn.com

G30 Chassis and Suspension

3. Brakes

3.1. Service brakes

The electric parking brake on the F10 was actuated by a separate EMF control unit. This function has been integrated into the DSC control unit on the G30.

3.1.1. Pedal mechanism mounting

The pedal mechanism mounting using ball head and plastic clip was taken from the G12 and is identical on the G30.

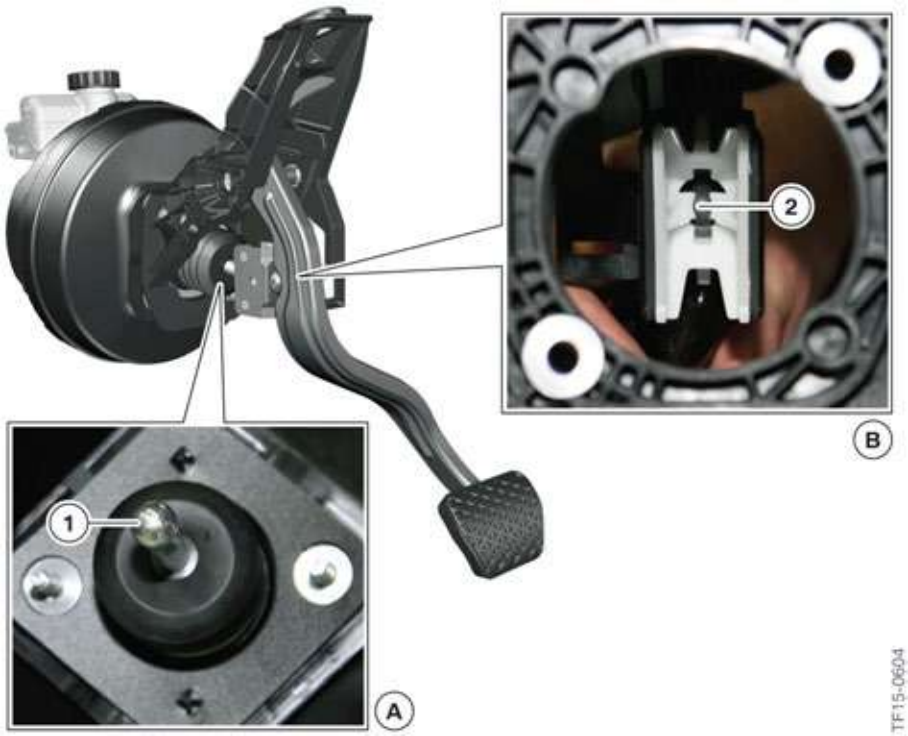

Mounting of the pedal mechanism on the brake servo linkage in the G30

Index	Explanation
A	Brake servo linkage
B	Pedal mechanism
1	Ball head
2	Plastic clamp

cardiagn.com

A special tool is needed to undo the connection (part number: 83 30 2 409 646).

Special tool for removing the pedal mechanism

cardiagn.com

3.1.2. Front brake

Overview of the brake calipers

Different brake calipers are used depending on the engine installed and equipment specification. The following table provides an overview of the various brake calipers for the front axle.

Supplier	Brake disc size [mm]	Caliper	Caliper design/ brake pad
Continental	348 x 30		Fixed caliper 1-part 4-piston ..... Bonded pad backing plate
Brembo	348 x 36		Fixed caliper 2-part 4-piston ..... Bonded pad backing plate
Brembo	374 x 36		Fixed caliper 2-part 4-piston ..... Bonded pad backing plate

All front brake calipers are made from aluminium.

cardiagn.com

Bonded brake pads

Bonded brake pads are used on the front brakes of the G30. The bonded brake pads are substantially less intrusive with regard to interference noise.

Bonded brake pad on the front axle of the G30

Index	Explanation
1	Brake pad paste
2	Adhesive film
3	Pad backing plate

The bonding surface of the brake pad must not be greased with the brake pad paste. The guides on the side must still be greased to ensure ease of movement of the brake pad in the brake caliper slot.

Vibrations which may arise from movement between the pad backing plate and brake piston are prevented thanks to the rigid connection of the brake pad to the brake piston.

⚠

The bonding surface must never be greased with the brake pad paste.

The surface of the brake piston connected to the bonded pad backing plate must be cleaned thoroughly before new bonded brake pads are flitted.

The brake pedal must be depressed for about 1 minute after new bonded brake pads have been fitted. This ensures that a reliable bonded connection is achieved between the brake piston and pad backing plate.

The brake pads must be replaced if the bonded connection does not hold. Reusing the original pads is not permitted.

⚠

The bonded connection between the brake piston and pad backing plate must not be separated with a hammer or screwdriver, but only with a plastic wedge, so as not to damage the brake caliper.

cardiagn.com

Refer to the latest valid repair instructions for the exact procedure for working on the brake system.

3.1.3. Rear brakes

Overview of the brake calipers

Two different brake calipers are used depending on the engine installed and equipment specification. Both variants have an actuator for applying the electric parking brake. The following table provides an overview of the various brake calipers for the rear axle.

Supplier	Brake disc size [mm]	Figure	Features/brake pad
TRW	330 x 20		Aluminium ..... Electric parking brake actuator ..... Greased pad backing plate
TRW	345 x 24		Grey cast iron ..... Electric parking brake actuator ..... Greased pad backing plate

Brake pads

Bonded brake pads are **not** used on the rear axle.

cardiagn.com

3.1.4. M Sport brake

Sport brake optional equipment in the G30

An M Sport brake is available on the G30 as optional equipment. The M Sport brake is included in the M Sport Package (OE ZMP) for the vehicles listed below.

In addition, the M Sport brake can be ordered as a separate optional equipment (OE 2NH) for 530i and the 540i including xDrive versions.

The M Sport brake is included as standard equipment of BMW M550i xDrive vehicle.

cardiagn.com

G30 Chassis and Suspension

3. Brakes

Overview of the variants

The following table provides an overview of the various optional equipment levels and engine versions with which the sport brake is offered.

Engine	M Sport brake in the M sport package (OE ZMP)	M Sport brake as separate optional equipment (OE 2NH)
530i / 530i xDrive	●	●
540i / 540i xDrive	●	●
M550i xDrive	Standard	Standard

Vehicle	Brake disc size [mm]	Brake pad	Figure	Installation location
530i / 530i xDrive	348 x 36	Bonded pad backing plate	TF16-1259	Version 1 front
540i / 540i xDrive & M550i xDrive	374 x 36	Bonded pad backing plate	TF16-1258	Version 2 front
530i / 530i xDrive 540i / 540i xDrive & M550i xDrive	345 x 24	Greased pad backing plate	TF16-1260	rear

3.2. Parking brake

The electric parking brake is implemented by means of a combined brake caliper on the rear axle, as on the G12. The electric parking brake functions are integrated into the Dynamic Stability Control DSC.

The electric parking brake has automatic roller detection for measuring the brake forces on a brake test stand.

cardiagn.com

G30 Chassis and Suspension

4. Wheels/Tires

4.1. Wheel hub

The hub and hole circle diameter on current vehicles produced by the BMW Group was modified in 03/2014. The hub diameter was reduced from 72.5 mm to 66.5 mm. The hole pattern was modified from 5 x 120 (F01/F10) to 5 x 112 (G12/G30).

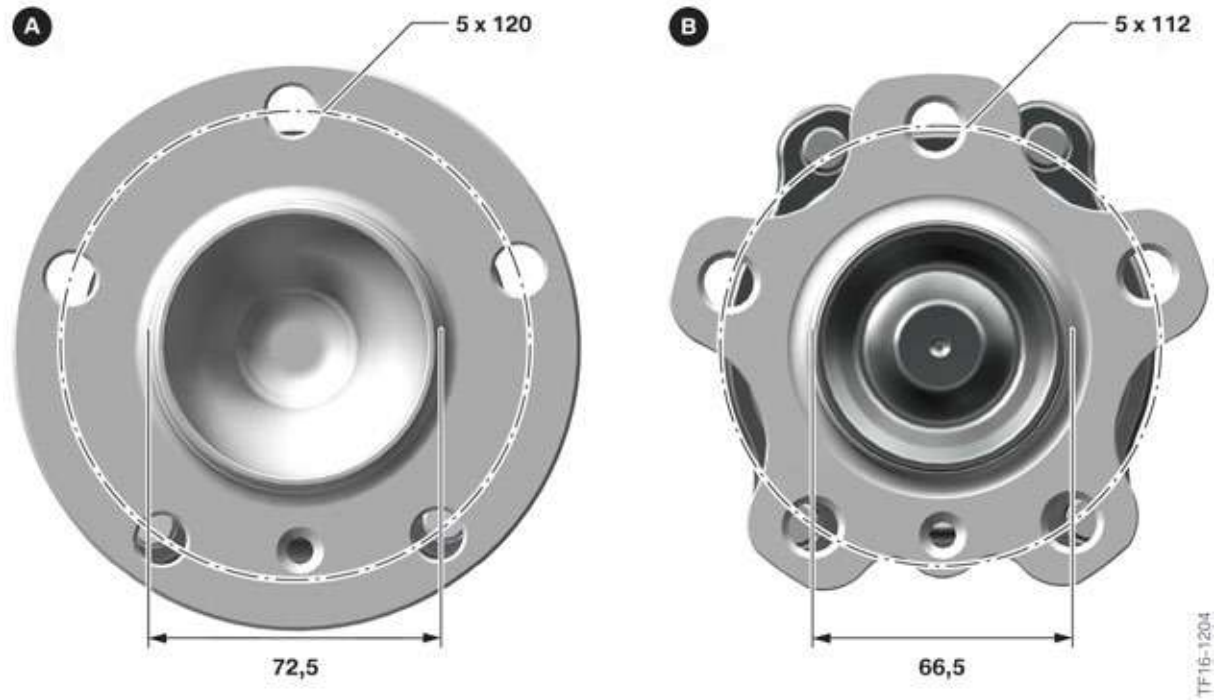

Comparison of wheel hub on F10 with that on G30

Index	Explanation
A	F10 hub
B	G30 hub

cardiagn.com

4.2. Tire pressure control

The G30 is fitted with the RDCi system that has been used in other BMW vehicles with the wheel electronics sensors manufactured by Schrader. The control unit for the system is incorporated into the DSC module.

The following conditions are required to teach-in the new wheel electronics.

Vehicle condition	5 minutes	17 minutes
Parking (asleep)	●	
Residing (awake)	●	
PAD (testing-analysis-diagnosis)	●	
Steady driving		●

4.2.1. Warnings

The warning system for the tire pressure control has been continually developed and modified to meet customer needs during the various development stages. The warning system provides information promptly in the event of pressure deviations and thus makes an important contribution to avoiding vehicle breakdowns as a result of insufficient tire pressures.

At present it is possible to distinguish between three warning levels.

Warning level 1

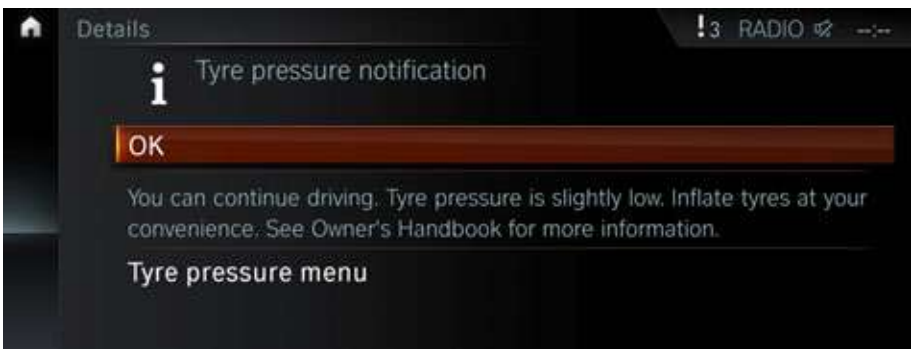

Warning level 1 Check Control message in the G30

Index	Explanation
1	Tire pressure information
2	Tire pressure slightly below the setpoint value, continued driving permissible

Warning level 1 is a message to the customer that the tire pressure has dropped as a result of natural diffusion (tire pressure loss). There are no technical problems and it is possible to drive on without concern. For this reason, the KOMBI instrument cluster is showing an information symbol only.

cardiagn.com

Warning level 2

Warning level 2 Check Control message in the G30

Index	Explanation
1	Inflate tires
2	Tire pressure too low, continued driving at a maximum speed of 130 km/h (80 mph) permitted

The warning level 2 message is shown when the tire pressure has dropped below the legal threshold and the customer's comfort and safety is impaired. A Check Control message and a yellow warning light are displayed accordingly in the KOMBI instrument cluster. It is, however, possible to drive on at moderate speeds. The tire pressure should, however, be corrected as soon as possible.

Warning level 2
21% - 25% Tire pressure loss (cold pressure)

Warning level 3

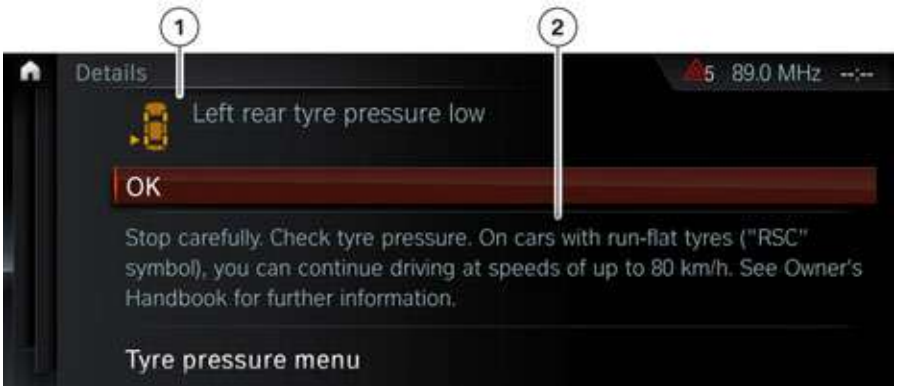

Warning level 3 Check Control message in the G30

Index	Explanation
1	Tire pressure loss, rear left
2	Tire pressure loss, stop with care

cardiagn.com

The yellow warning light is shown if the tire pressure drops suddenly or falls below the warning level 3 threshold. The customer should stop with care and check the tires visually. If possible, the tire pressure should be corrected.

It is possible to drive on at a maximum speed of 80 km/h (50 mph) if the vehicle has run-flat tires (RSC).

Warning level 3	Active
Tire pressure less than 1.5 bar / 22 psi	●
Sudden tire pressure loss	●

4.2.2. Notes for Service

All three warnings are an indication of a loss in tire pressure. The system is working correctly and faultlessly as to monitor the tire pressures. Electrical vehicle diagnosis is not necessary in this case, as no fault memory entry has been stored.

In the event of warning level 2 and warning level 3, the tire and the tire valve must also be checked for leaks or damage.

⚠

The manufacturer's information must be observed in the event of any work on the wheels and tires. Failure to observe these requirements can lead to serious accidents.

4.3. Tire pressures

Optimum adjustment of tire pressure is necessary for the following reasons:

- Best possible driving dynamics.
- Maximum utilization of tire service life.
- Reduction of the fuel consumption.
- Optimum operation of various suspension control systems.

For this, the physical principles should be observed in combination with pressure and temperature. The following rule of thumb applies: So a temperature change for every +/– 10 °C or +/– 18 °F relates to an increase or decrease in tire pressure of roughly +/– 0.1 bar or 1.4 psi. Please refer to the temperature chart below.

cardiagn.com

CELSIUS (°C)	FAHRENHEIT (°F)	CELSIUS (°C)	FAHRENHEIT (°F)
-40	-40	95	203
-35	-31	100	212
-30	-22	105	221
-25	-13	110	230
-20	-4	115	239
-15	5	120	248
-10	14	125	257
-5	23	130	266
0	32	135	275
5	41	140	284
10	50	145	293
15	59	150	302
20	68	155	311
25	77	160	320
30	86	165	329
35	95	170	338
40	104	175	347
45	113	180	356
50	122	185	365
55	131	190	374
60	140	195	383
65	149	200	392
70	158	205	401
75	167	210	410
80	176	215	419
85	185	220	428
90	194	225	437

Temperature chart

The tire pressures specified by the manufacturer apply for summer and winter operation, irrespective of the temperature. However, it must be observed that due to the seasonal temperature differences, the tire pressures should be checked frequently.

4.3.1. Cold Tire pressure

If the tire air temperature is the same as the current ambient temperature, this is referred to as cold tire pressure. The tire pressures should only be changed with a cold tire pressure on vehicles without the electronic tire pressure label.

4.3.2. Warm Tire pressure

During longer trips at higher driving speeds the tire warms up due to the friction with the road surface. The temperature of the tire increases as a result and this is accompanied by an increase in tire pressure.

cardiagn.com

If there is a significant difference between ambient temperature and tire air temperature this is always referred to as warm tire pressure. Avoid changing the tire pressures when the tire is warm on vehicles without the electronic tire pressure label.

4.4. Electronic tire pressure label

4.4.1. Technical functional description

An electronic tire pressure label is being used for the first time at BMW. The tire pressure label sticker has been supplemented in the G30 by an additional user menu in the Central Information Display (CID).

Tire pressures are changing constantly depending on tire air temperature. A change in the tire air temperature for every +/– 10 °C or +/– 18 °F corresponds to a pressure increase or pressure decrease of +/– 0.1 bar or 1.4 psi. For this reason, you may see a warning message of insufficient tire pressure if your tires have cooled significantly. In many of these cases, there is not technical fault, but insufficient checking of the tire pressures which should be checked at regular intervals.

Unlike the tire pressure sticker, the electronic tire pressure label permanently monitors the nominal pressures taking into consideration the current temperatures. This means that it determines and displays the optimum tire pressure at any temperature.

Electronic tire pressures label in the G30

Index	Explanation
A	Electronic tire pressure label in the CID
B	Tire pressure information label

Once you have selected the relevant tire type (summer/winter), the tire size on the rear axle and max speed range, the appropriate tire pressures are output to the CID (nominal pressure). Following the input and before the teach-in drive, these correspond to the tire pressures on the tire pressure label.

The vehicle must then be driven so it can learn the new size wheels and tires. Once the teach-in drive has been successfully completed, the current optimum tire pressure taking into consideration the tire air temperatures is always displayed. This can differ from the information on the conventional tire pressure label on the B-pillar because it has taken the tire air temperatures into consideration. Correct tire pressures reduce fuel consumption and ensure greater driving safety.

cardiagn.com

The tire air temperatures are measured by the four wheel electronics units in the various wheels. Since the wheel electronics units do not begin transmitting until driving speed has reached 20 km/h (12 mph), it is not possible to determine this while the vehicle is parked. A substitute value can be formed using the outside temperature sensor when the vehicle is stationary for wheels that have already been taught-in (see the following chapter “Measurement of tire air temperatures when stationary”).

When new wheels and tires are installed, for example during a wheel change in the workshop, the nominal pressure (cold tire pressure) can generally be used. When wheels are changed in the winter, however, the great temperature difference between the ambient temperature and the current temperature of the tire (difference between workshop temperature and ambient temperature) must be taken into consideration. In this case, the tire pressure from the conventional tire pressure label should be corrected upwards somewhat. A temperature difference for every +/– 10 °C corresponds to approximately 0.1 bar tire pressure change.

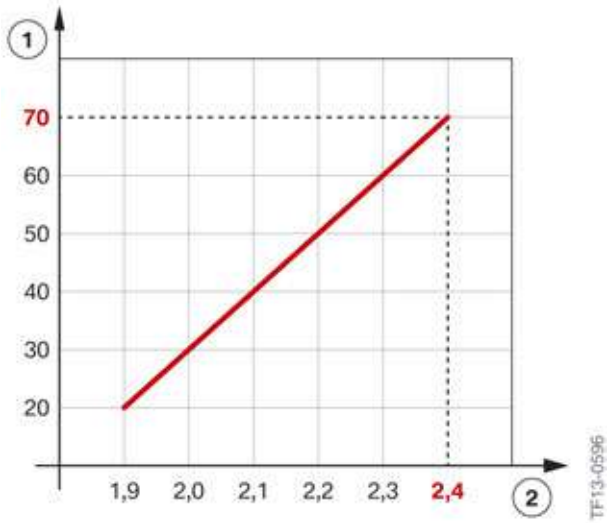

Tire pressure in bar and temperature in °C

Index	Explanation
1	Tire air temperature in °C
2	Pressure in bar

A temperature difference for every +/– 18 °F corresponds to approximately 1.4 psi of tire pressure change.

cardiagn.com

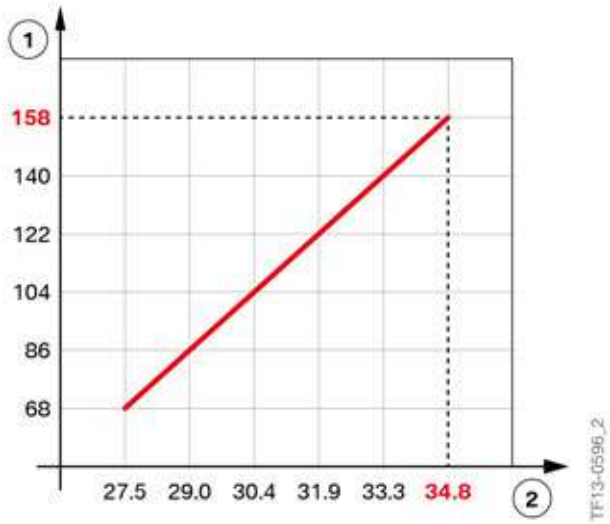

Tire pressure in psi and temperature in °F

Index	Explanation
1	Tire air temperature in °F
2	Pressure in psi

After the wheels have completed their teach-in drive, the nominal pressures can differ from the actual values determined and entered in the workshop. The background reason for this is the incorporation of the temperatures following a completed teach-in drive. The customer should be informed that although the tire pressures have been checked, these can constantly change depending on the temperature. However, the tire pressures should be adjusted again at an early opportunity if the difference is permanently more than 0.2 bar / 2.9 psi.

cardiagn.com

4.4.2. System overview

The electronic tire pressure label is an extension to the vehicle software. No additional components are required for the integration of this new function. All the information is supplied by sensors that are already built into the vehicle.

System overview of the electronic tire pressure label in the G30

Index	Explanation
1	Remote control receiver (FBD)
2	Wheel electronics
3	Dynamic Stability Control (DSC)
4	Outside temperature sensor
5	Central Information Display (CID)

cardiagn.com

4.4.3. Operation

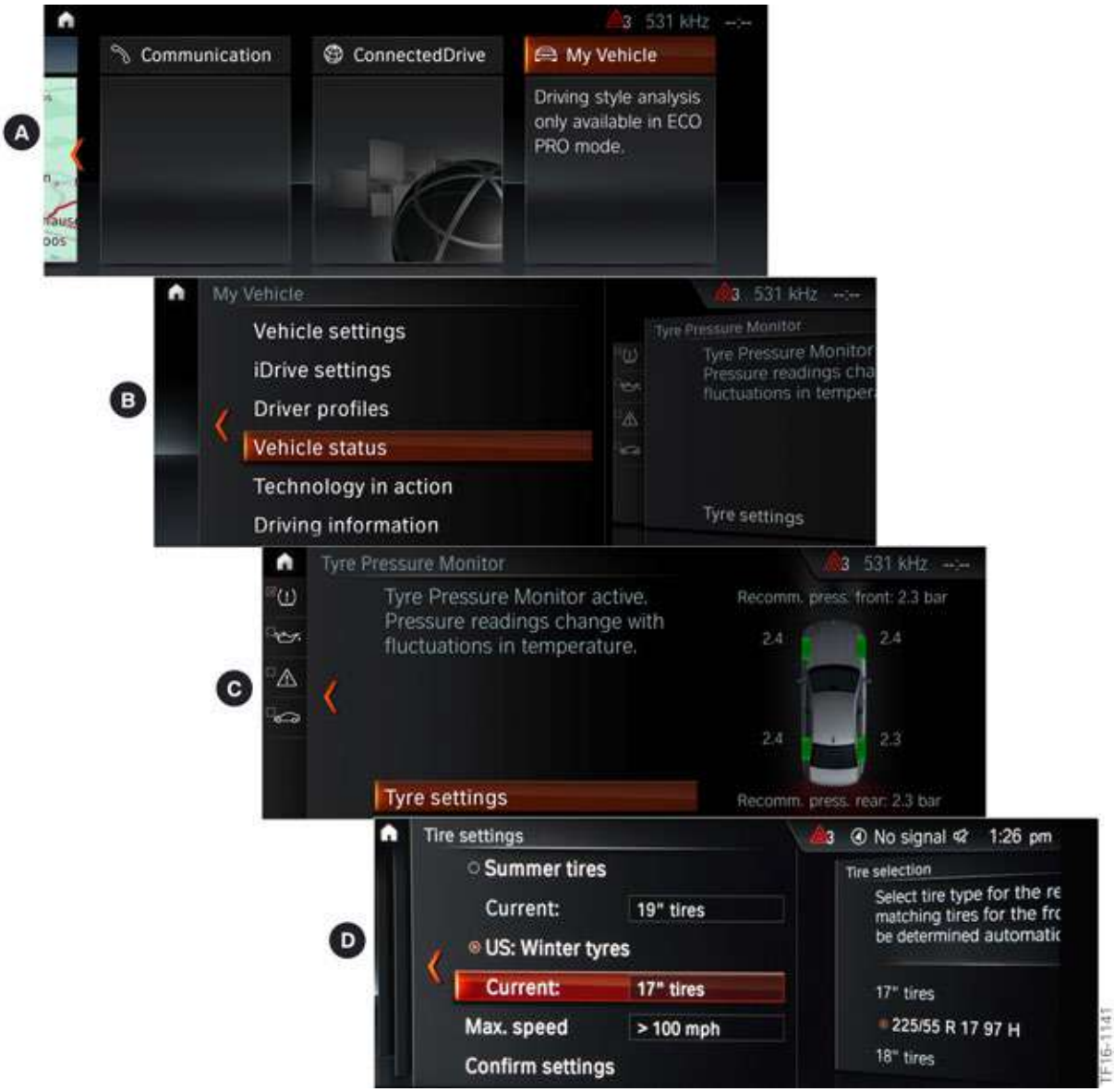

Menu guidance for the electronic tire pressure label on the G30

Index	Explanation
A	My Vehicle
B	Vehicle status
C	Tire settings
D	Tire type (summer/winter)

cardiagn.com

A distinction must be made when using the electronic tire pressure label in the following three situations:

- Checking the tire pressures.
- Checking the tire pressures after a wheel/tire change.
- Checking the tire pressures of wheel and tire combinations that have not been saved (special sizes).

The relationships and the special features of operation are described in greater detail below.

Checking the tire pressures

The tire pressure to be set on wheels that have already been taught-in can be identified from the setting menu as follows:

- My Vehicle
- Vehicle status
- Tire Pressure Monitor

Adjustment of the tire pressures for wheels that have already been taught-in in the Central Information Display on the G30

If the tire pressures have to be checked, it is only necessary to call up the Tire Pressure Monitor (TPM) menu and compare the relevant nominal pressures displayed with the actual pressures. It must be noted here that the wheel and tire combination stored must match the wheel sizes actually fitted to the vehicle. The difference displayed must then be corrected with the help of a tire filling station. It is not necessary to reset the tire pressure control as it was on previous systems.

A warning issued by the Tire Pressure Monitor (TPM) always relates to the current nominal pressure.

There is no TPM reset provision for the wheel and tire combinations stored (standard sizes). The TPM warnings always relate to the nominal pressure displayed. No nominal pressure is displayed if special sizes have been selected. In this case, it is still necessary to carry out a manual TPM reset (see "tire Selection: Special Sizes" chapter).

cardiagn.com

Checking the tire pressures after a wheel change

The tire pressure to be set on new wheels can be completed from the setting menu as follows:

- My Vehicle
- Vehicle status
- Tire Pressure Monitor (TPM)
- Tire settings
- Tire type (summer/winter)

Adjustment of the tire sizes to be set on new wheels in the Central Information Display on the G30

The procedure for setting a new tire type is only necessary under the following conditions:

- A new set of wheels has been fitted.
- The max vehicle speed has changed.
- The wheel and tire combination stored in the Central Information Display (CID) does not correspond to the actual combination.

The nominal pressures displayed after the input and confirmation of a new tire type always relate to the cold tire pressure. It is not possible to compare actual and nominal pressures through the Central Information Display (CID) as the system assumes that a new set of wheels has been fitted and its wheel electronics do not transmit any tire pressures while the vehicle is stationary.

A warning message may be displayed in the event of incorrect operation of the system. If, for instance, a new tire type is selected and confirmed after a long highway journey, although the wheels currently fitted have not been swapped, there will be considerable pressure deviations between the nominal pressure displayed in the CID (cold tire pressure) and the actual tire pressure on the wheels (warm tire pressure) because of the temperature differences. The pressure deviation described can, however, only be determined using a tire inflator, as the system does not display any actual pressure on the CID after confirmation of the new tire type. There could be a new warning message in the subsequent teach-in drive if the tire pressures (warm tire pressure) in the wheels were now to be adjusted to the nominal pressure displayed on the CID (cold tire pressure) using the tire inflator.

cardiagn.com

The background reason for this is the incorporation of the tire air temperatures transmitted. When the vehicle is in motion, the wheel electronics are constantly transmitting logs with the following information:

- Identification number ID
- Battery status
- Tire pressure
- Tire air temperature

During the teach-in drive the system detects a warm tire and calculates a higher tire pressure for inflation than the nominal pressure displayed before starting the drive (cold tire pressure). The difference between the nominal pressure and the actual pressure can now be seen in the tire pressure control menu. The tire pressure must be adjusted again.

When new wheels are fitted, for example during a wheel change in the workshop, the temperature difference between the ambient temperature and the current temperature of the tire (workshop temperature and ambient temperature) must therefore still be taken into account.

Prompts the Central Information Display (CID)

Correct responses must be given for the following prompts in the menu to enter new wheel and tire combinations.

Central Information Display	Description
	New wheels can be selected from the tire Settings menu item. **Important note:** The nominal pressure displayed must be adjusted if it is only a question of adjusting the tire pressures and no new wheels have been fitted. Resetting the tire pressure (TPM reset) as required on previous vehicles is not necessary. The TPM warning pressures that are currently valid always relate to the nominal pressure displayed in the CID.
	The tire type (summer/winter) and the tire size, 17”, 18”, 19” or 20” can be selected from the tire Settings menu item.
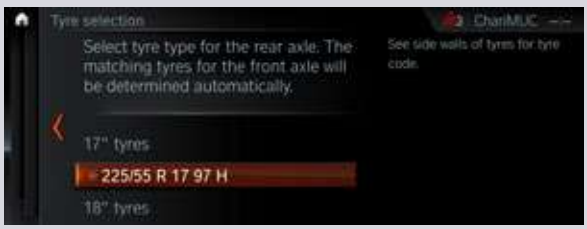	Various combinations of tire and wheel are stored in the tire Selection menu. Find out the correct size on the rear axle of the vehicle and enter it into the Central Information Display (CID).

cardiagn.com

G30 Chassis and Suspension

4. Wheels/Tires

Central Information Display	Description
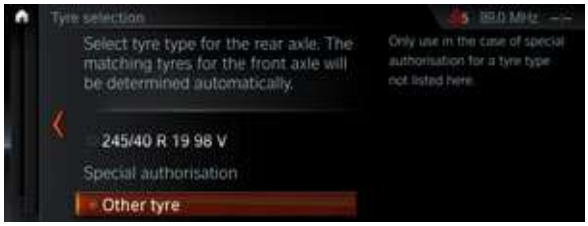	The Special Approval (different tires) menu item can be used in the following situations: • When a tire type not listed (special wheel/tire combination) is being used. • If the customer wishes to have a tire pressure other than that stored by the system for his tire type. When this function is used, the TPM system has to be reset as before (TPM reset) following a correction of the tire pressures.
	Once the appropriate wheel and tire combination has been selected, the max vehicle speed must be specified. The preset values should not be changed by the customer.
	Once the modified tire settings have been confirmed, the system loads the new nominal pressures .

cardiagn.com

Central Information Display	Description
	The system then displays the modified tire type and the speed range. The new nominal pressures applicable for the front and rear axle are also displayed. The old actual pressures stored have been deleted.
	When the drive starts > 20 km/h (> 12 mph), the wheel electronics units transmit their logs. In the first teach-in stage the tire pressures are merely checked for plausibility and displayed in color. • Shown in green = tire pressure OK. • Shown in yellow = tire pressure not OK.
	In the second teach-in stage, the various wheel electronics are assigned to the particular wheel on which they are fitted. After successful assignment of the wheel electronics, the actual values can be displayed and compared with the nominal pressure. In the event of pressure deviations, it is merely necessary to adjust the actual pressure to the nominal pressure. It is not necessary to reset the TPM system (TPM reset).

The nominal pressures displayed must be observed. Failure to do so may result in tire pressure warnings from the Tire Pressure Monitor (TPM) system.

cardiagn.com

4.4.4. Tire selection: special sizes

Special sizes (special approval) which are not listed in the menu must be entered by selecting "Other tires".

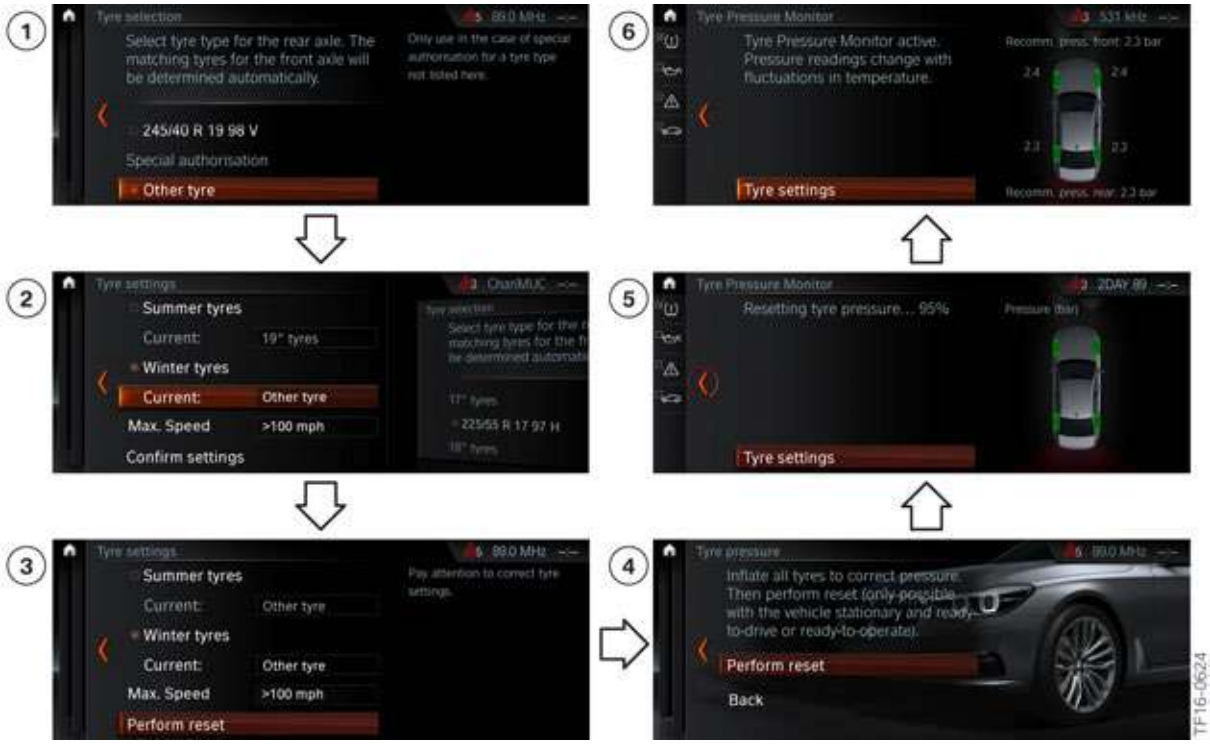

Entering tire special sizes in the electronic tire pressures label on the G30

Index	Explanation
1	Special approval (special sizes)
2	Other tires
3	Perform reset
4	Note that reset possible only when stationary
5	First teach-in stage (wheel electronics IDs known)
6	Second teach-in stage (wheel assignment of the wheel electronics completed)

This function should be used for special tire sizes only. There is no specification of the tire pressure for this selection. Following confirmation of the special tire sizes and adjustment of the tire pressure, the TPM learns the set tire pressure after a successful teach-in drive. This means that the warning threshold values are calculated by the TPM system using the tire pressure currently set. This function in this menu is identical to that of previous TPM systems. The tire pressures must always be reset in the special sizes menu after any change (TPM reset). It is not possible to perform a nominal/actual comparison of the various tire pressures (no nominal pressure output).

In exceptional cases, this function can also be used to accommodate special customer requirements. The output of the nominal pressure can be disabled by selecting the special sizes if a customer does not wish to accept the nominal pressures displayed. This makes it possible to teach-in an individual tire pressure for the TPM system warning threshold values.

cardiagn.com

In general, the specified minimum pressures must be observed when teaching-in new tire pressures. For example, it is not possible to teach-in tire pressures < 2.0 bar / 29 psi. In this event, a tire pressure loss warning will be output during the teach-in time.

4.4.5. Tire pressure loss display

If the tire pressure falls below the stored warning threshold values the driver is informed, whether it is a case of sudden tire pressure loss or gradual tire pressure drop immediately through the Central Information Display (CID).

The system only warns of inadequate tire pressures. There is no such warning for excessive tire pressure.

Tire pressure loss warning in the G30

The wheel in question changes color from green to yellow when the tire pressure is too low.

cardiagn.com

4.4.6. Teaching-in the tire pressures

The vehicle must be driven at speeds >20 km/h (>12 mph) to teach-in new tire pressures. The current teach-in status (progress as a %) is indicated in the display.

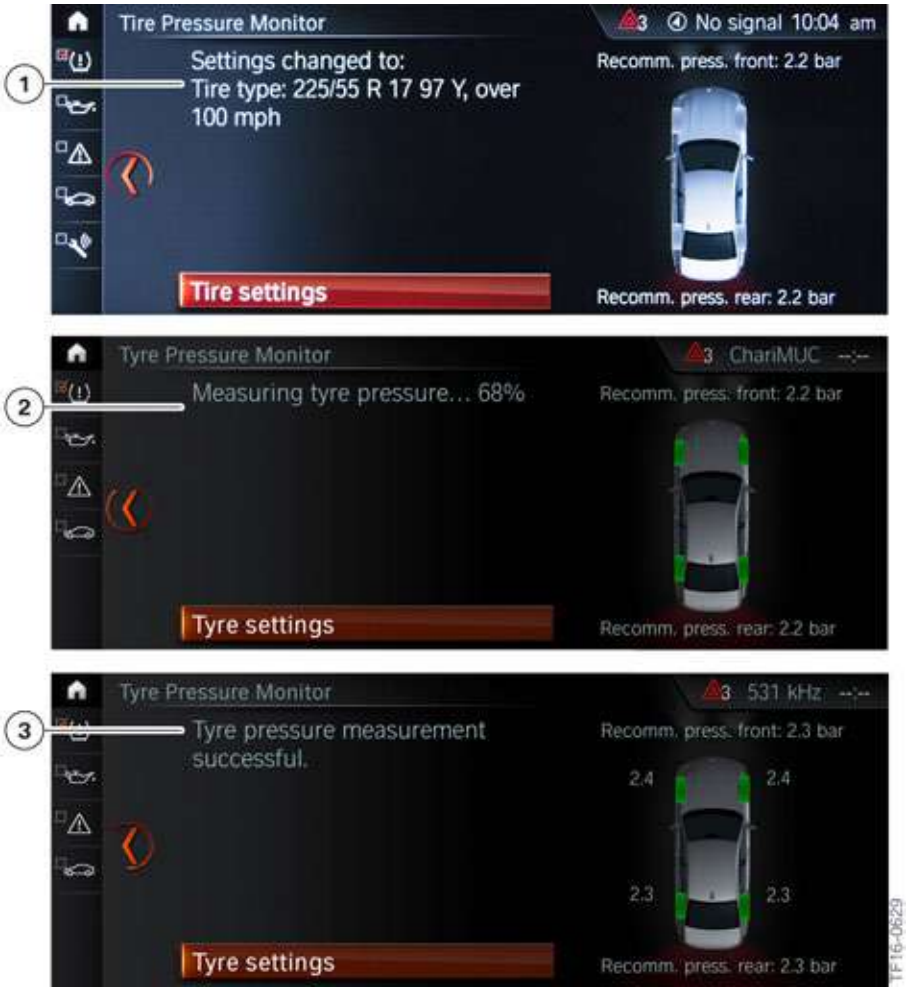

Display of the procedure for teaching-in new tire pressures in the Central Information Display (CID) on the G30

Index	Explanation
1	Note: Settings changed to; tire type: 225/55 R 17 97 Y, over 100 mph
2	Note: Tire pressure being measured 68%
3	Note: Tire pressure measurement successfully completed

As soon as the system has accepted the ID of the new wheel electronics (first teach-in time) the tires are shown in color in the Central Information Display (CID).

Once the tire pressures appear on the CID, the system has completed the wheel assignment (second teach-in time).

cardiagn.com

4.4.7. Measurement of the tire air temperatures when stationary

Input and output graphic in the electronic tire pressures label on the G30

cardiagn.com

Index	Explanation
A	Input
B	Output
1	Tire air temperature
2	Ambient temperature
3	Dynamic Stability Control (DSC)
4	Tire pressure output
5	Central Information Display (CID)

In the case of wheel electronics that have already been taught-in, the current tire pressures are output through the Central Information Display (CID) even if the vehicle is stationary. However, the relevant tire air temperatures are required before the system can display the tire pressures that are currently applicable. These are determined and forwarded by the four wheel electronics units at regular intervals when the vehicle is in motion. Since the wheel electronics do not transmit while the vehicle is stationary, the tire air temperatures can only be retrieved while the vehicle is in motion.

When the vehicle is at a standstill, the tire air temperature is calculated using a special algorithm (calculation model). The information from the outside temperature sensor is required for this.

Once the calculation is complete, the specified tire pressures are output from the DSC to the CID.

cardiagn.com

G30 Chassis and Suspension

4. Wheels/Tires

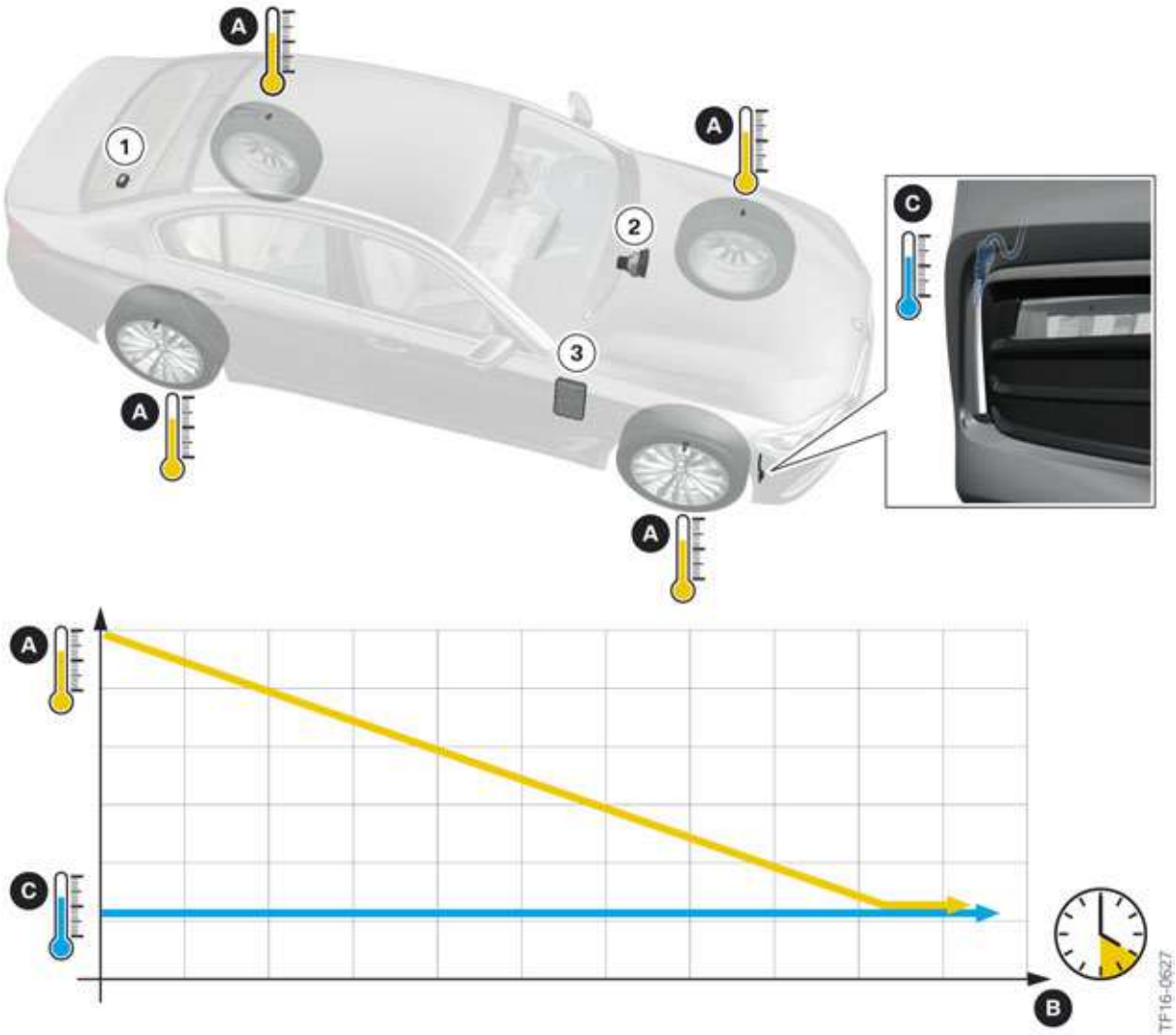

Measurement of the tire air temperature when stationary G30

Index	Explanation
A	Tire air temperature
B	Time
C	Ambient temperature
1	Remote control receiver (FBD)
2	Dynamic Stability Control (DSC)
3	Body Domain Controller (BDC)

cardiagn.com

4. Wheels/Tires

The wheel electronics send data logs to the remote control service (FBD) up to a driving speed of about 20 km/h (12 mph). The logs are forwarded from there via the Body Domain Controller (BDC) to the Dynamic Stability Control (DSC).

The data log sent last, before the vehicle stops is saved with the corresponding tire air temperature. At the same time the ambient temperature is determined from the outside temperature sensor and saved. The tire air temperature currently valid is then calculated using these two values, taking into consideration the time for which the vehicle has been stopped. An algorithm is stored in the DSC for this. After no more than 2 hours the tires will have cooled down so much that the tire air temperature matches the ambient temperature.

cardiagn.com

G30 Chassis and Suspension

5. Driving Stability Control

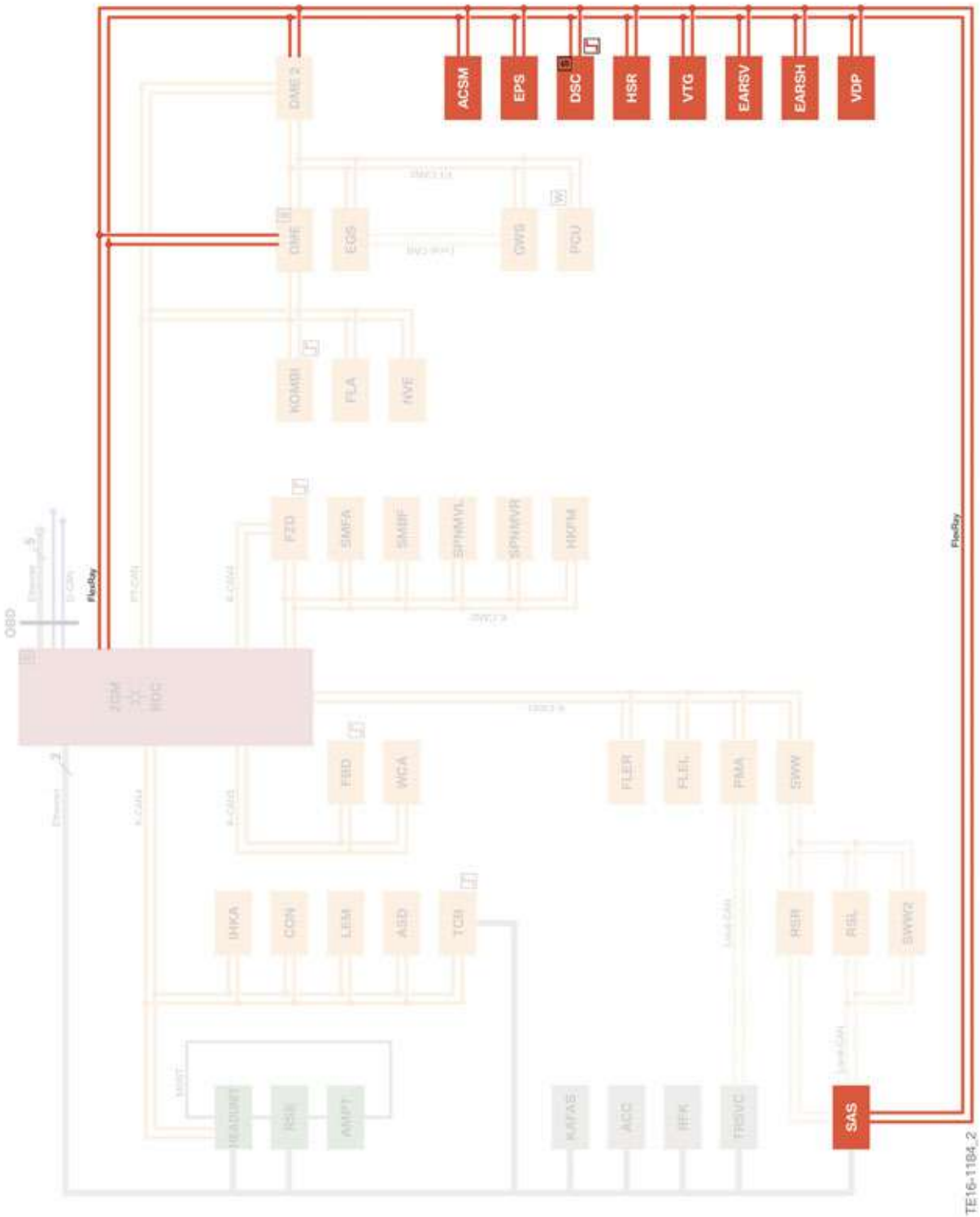

FlexRay bus overview in the G30

cardiagn.com

G30 Chassis and Suspension

5. Driving Stability Control

Index	Explanation
ACSM	Advanced Crash Safety Module
DSC	Dynamic Stability Control
EARSV	Electric active roll stabilization front
EARSH	Electric active roll stabilization rear
EPS	Electromechanical Power Steering
HSR	Rear axle slip angle control
SAS	Optional equipment system
VDP	Vertical Dynamic Platform
VTG	Transfer case

As is already familiar from the G12, the G30 does not have Integrated Chassis Management (ICM). The ICM functions are distributed between the optional equipment system (SAS) and the Dynamic Stability Control (DSC).

It has been possible to further improve the driving dynamics in the G30 by selective use of various control functions. This is particularly keenly felt in relation to the steering behavior, the traction and the vehicle's stability.

The control units necessary to meet the requirements on driving dynamics are located on the FlexRay bus. This allows them to quickly exchange their information with each other and react to events.

The following actuators are activated as needed:

- Rear axle slip angle control HSR (optional equipment)
- Electronic Power Steering EPS (standard equipment)
- DME engine control unit
- VTG transfer case (optional equipment)
- Electric active roll stabilization at the front and rear (EARSV/EARSH) (optional equipment)
- Electronic Damper Control (EDC) (optional equipment)

The tables below provide an overview of the various control functions and their effects on the drivability.

Steering function	Description	Control units
Dynamic driving rear axle steering	Agility/manoeuvrability in the low speed range is improved by selectively steering in the opposite direction (counter-steering) on the rear axle. A more stable driving behavior at higher speeds is ensured by selectively steering in the same direction (co-steering) on the rear axle.	• DSC • HSR
Limit range response	The limit range response influences the steering torques to be applied by the driver so that the transition from stable driving to over or understeer situations is better perceived.	• DSC • EPS

cardiagn.com

G30 Chassis and Suspension

5. Driving Stability Control

Traction	Description	Control units
Cornering Traction Control	Influencing the rolling moment relationships between front and rear axle is used to improve the traction when cornering.	• VDP • EARS
Driving dynamic intervention in drive torques	Regulating the drive torque within limits on the basis of the calculated coefficient of friction to avoid excessive jumps in ASC control. A more comfortable design is achieved by reducing the interventions felt.	• DSC • DME
Efficiency Mode	Efficiency Mode allows a reduction in consumption thanks to activation of AWD functionality when it is needed. The torque distribution towards the front wheels can be completely cut-off in driving situations where all-wheel drive is not needed. Smart control allows the torque distribution to be reactivated again proactively to control traction.	• DSC • VTG

Stabilization	Description	Control units
Cornering Steering Behavior	Selective influencing of the rolling moment relationship between front and rear axles promotes a stable and agile characteristic of the vehicle's self-steering response.	• VDP • EARS
Yaw rate control	Selective steering movements on the rear axle in situations such as over or understeer stabilize the vehicle.	• DSC • HSR
Yaw moment compensation	The yaw movement of the vehicle arising under heavy braking coefficients of friction between the left-hand and right-hand sides of the vehicle is compensated for by selective steering movements on the rear axle.	• DSC • HSR
Yaw moment compensation	Advice is given to the driver regarding the steering necessary to compensate for the yaw movement of the vehicle arising under heavy braking coefficients of friction between the left-hand and right-hand sides of the vehicle by selective actions by the EPS on the steering.	• DSC • EPS
Performance Control	Enhances driving safety and driving dynamics when cornering by selective distribution of the drive and brake forces to the individual wheels. The tendency of the vehicle to over or understeer is reduced by brake interventions on individual wheels. At the same time, the driving power is passed to the outside wheels which have to cover a greater distance. The deceleration caused by the brake intervention is furthermore compensated for by increasing the engine torque.	• DSC • DME

cardiagn.com

5.1. Dynamic Stability Control (DSC)

Alongside the Vertical Dynamics Platform (VDP) control unit, the Dynamic Stability Control (DSC) represents the core element of the driving dynamics control systems used to increase active safety. It optimizes driving stability in all driving conditions and also traction when driving off and accelerating.

Furthermore, it identifies unstable driving conditions such as under or oversteering and helps maintain the stability of the vehicle.

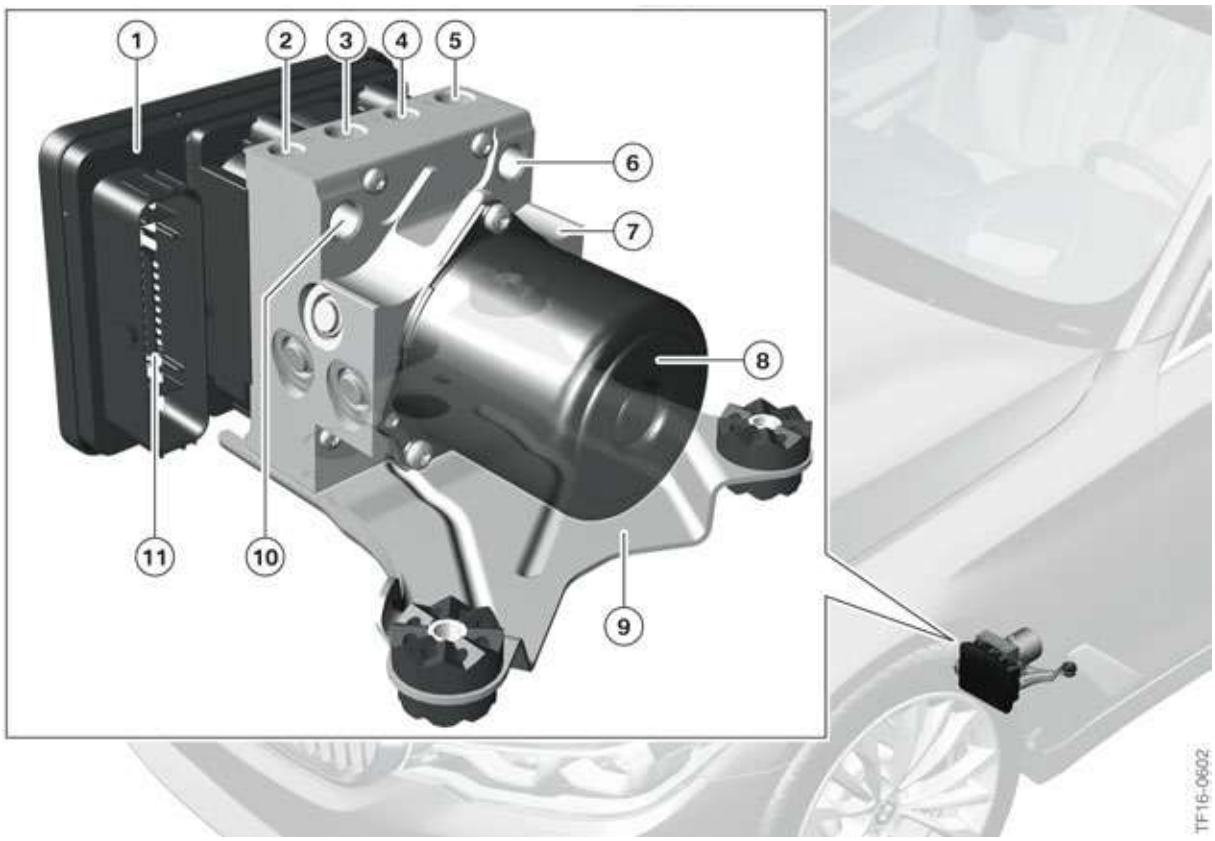

TRW Dynamic Stability Control (DSC) EBC460

Index	Explanation
1	DSC control unit
2	Rear left wheel brake connection
3	Rear right wheel brake connection
4	Front right wheel brake connection
5	Front left wheel brake connection
6	Tandem master brake cylinder for brake circuit 1 connection
7	Hydraulic units

cardiagn.com

Index	Explanation
8	Electric motor
9	Holder
10	Tandem master brake cylinder for brake circuit 2 connection
11	DSC control unit connector strip

The connections have differing thread diameters to prevent confusion of the brake lines on the DSC.

5.1.1. Functions

Modern DSC units have a variety of different functions with the help of which they support the driver in hazardous situations and in sporty driving.

Function	Description
ABS Antilock Brake System	Prevents the wheels from locking under braking.
EBV Electronic brake force distribution	Regulates distribution of the brake force to the front and rear axles depending on the load status of the vehicle.
CBC Cornering Brake Control	Regulates brake pressure under braking when cornering.
DBC Dynamic Brake Control	Applies maximum brake pressure in the event of panic braking and thus shortens the stopping distance.
ASC Automatic Stability Control	Prevents the drive wheels spinning when driving off by intervening in the engine and brakes.
MSR Engine drag torque control	Prevents the drive wheels locking up because of braking by the motor when there is a low coefficient of friction with the road surface.
DSC Dynamic Stability Control	Prevents understeer or oversteer in all driving situations by selective braking and engine management interventions on individual wheels.
DTC Dynamic Traction Control	Reduces DSC interventions and thus enhances drive on loose surfaces.
DBC Dynamic Brake Control	Detects panic braking and supports the driver through immediate application of maximum brake pressure.
ADB Automatic Differential Brake	Replicates the function of a differential lock. If a wheel displays a tendency to spin, this wheel is automatically braked so that propulsion can still be achieved via the other wheel of the driven axle.
Hydraulic brake-servo assistance	Increases the brake pressure applied hydraulically in the event of failure of the brake servo or vacuum supply.
Brake drying	Dries the friction surface of the brake disc by cyclically applying the brake pads in rain (no braking perceptible).

cardiagn.com

Function	Description
Brake standby	Builds up a moderate brake pressure when the driver takes his foot off the accelerator pedal very quickly. This means that the braking effect will begin sooner in the event of subsequent panic braking.
Fading Brake Support	Supports the driver when braking if the brake temperature has become very high due to an extreme driving style and the desired deceleration can be achieved only by applying a higher brake force.
Drive-off assistant	Holds the vehicle for approximately 1.5 seconds on uphill gradients although the driver has already released the brake. This means that the driver can drive off comfortably, without the vehicle rolling back down the hill unintentionally.
Automatic Hold	Automatically holds the vehicle after it has come to a standstill without it being necessary to still press the brake when the drive position is selected. The brake is automatically released again on subsequent acceleration. There is a button to enable and disable the function manually.
Electric parking brake	When the parking brake button is pressed the DSC control unit controls the two actuators on the rear axle brake caliper. The two electric motors in the actuators operate a spindle drive which uses the brake piston to press the brake pads against the brake disc with a high preload force.
Brake pad wear detection	Monitors the front left and rear right brake pads for wear and reports a corresponding service requirement through the KOMBI instrument cluster or the Central Information Display (CID).
Tire pressure control	Monitors the current tire pressures on all wheels and provides information when pressures fall below stored warning threshold values by issuing corresponding instructions.

The Hill Descent Control (HDC) is no longer used on passenger cars with xDrive, HDC is currently only used on the X models. (X5, X6 etc.)

5.2. Steering

The G30 has Electronic Power Steering (EPS) in the following different versions:

- Standard steering 12 V
- Integral Active Steering 12 V
- Integral Active Steering 24 V

cardiagn.com

G30 Chassis and Suspension

5. Driving Stability Control

5.2.1. Overview of equipment specifications

The following graphic shows the installation positions of the different system components.

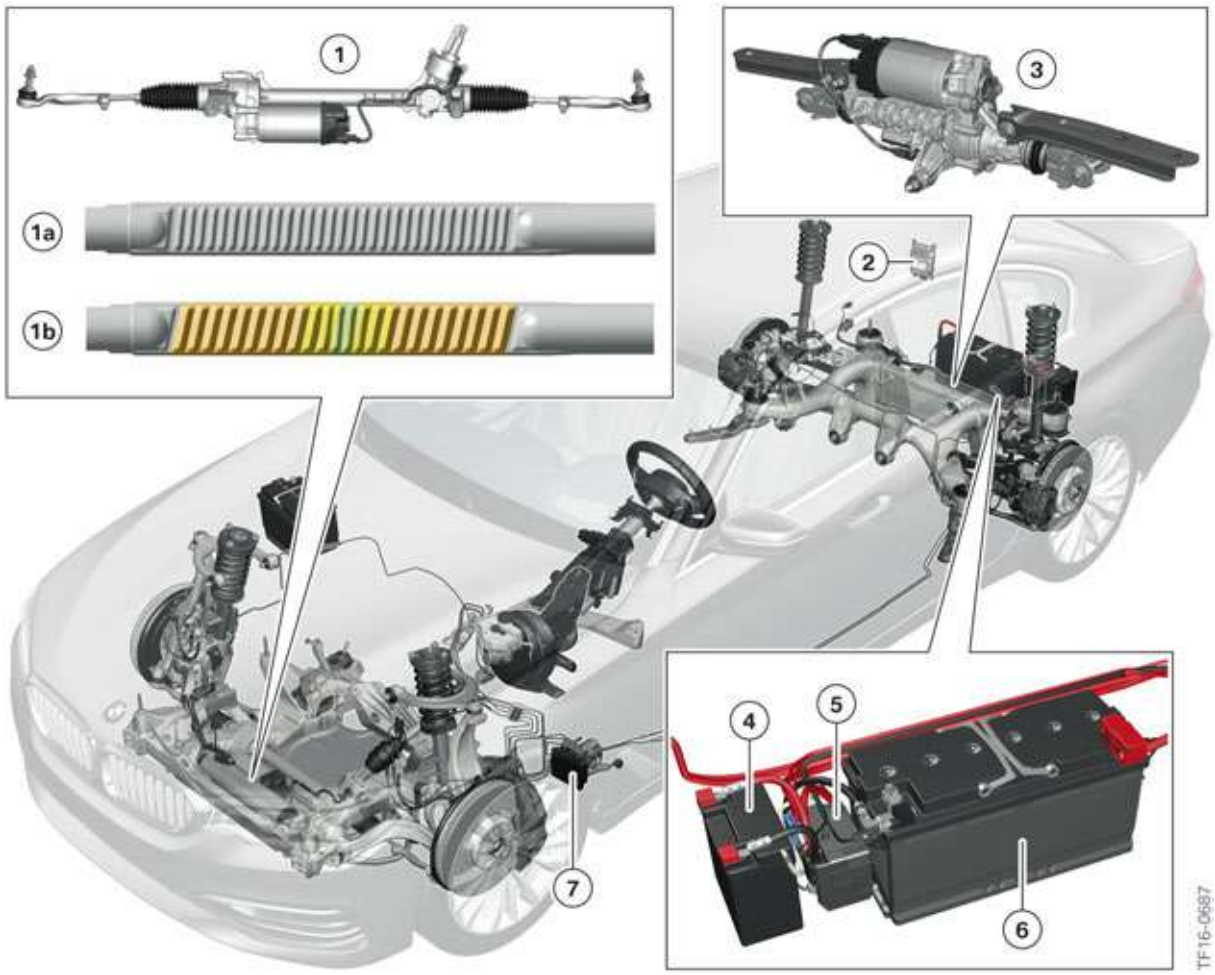

Overview of steering system types in the G30

Index	Explanation
1	Electromechanical Power Steering
1a	Conventional rack geometry (standard steering)
1b	Variable rack geometry (Integral Active Steering)
2	Power Control Unit (PCU) (only for 24 V steering)
3	Rear axle slip angle control Integral Active Steering
4	12 V auxiliary battery (only for 24 V steering)
5	Separating element (only for 24 V steering)
6	12 V battery
7	Dynamic Stability Control (DSC)

cardiagn.com

5. Driving Stability Control

Only the basic steering is offered in some vehicle types.

Components	Standard steering 12 V	Integral Active Steering 12 V	Integral Active Steering 24 V
EPS with normal rack geometry	●		
EPS with variable rack geometry		●	●
12 V battery	●	●	●
12 V auxiliary battery			●
Power Control Unit PCU (DC/DC converter 150 W)			●
Rear axle slip angle control HSR		●	●

Integral Active Steering is offered as 12 V or 24 V steering depending on the front axle load.

The following information for the voltage range of the Integral Active Steering applies for series launch. The values can change at any point during series production.

Vehicles

Model	Engine	Rear-wheel drive with Integral Active Steering	All-wheel drive with Integral Active Steering
530i	4-cylinder B46 gasoline engine	12 V	12 V
540i	6-cylinder B58 gasoline engine	12 V	12 V
M550i	8-cylinder N63TU2 gasoline engine	12 V	24 V

cardiagn.com

5.2.2. Steering wheels

Overview of the steering wheel versions on the G30

Index	Explanation
A	Sports steering wheel with shift paddles (382 mm) standard on all G30 models except on the M550i xDrive
B	M sports steering wheel with shift paddles (373 mm) standard on the M550i xDrive, optional on all other G30 models

The following additional functions in the steering wheel can be present as options:

- Heated steering wheel.
- Steering wheel vibration for assistance systems such as lane departure and lane change warning.
- Touch detection for the traffic jam assistant function.

5.2.3. Steering column adjustment

Steering column is adjusted electronically.

Steering column adjustment	Forward/back adjustment	Height adjustment
Electric	60 mm	+/- 20 mm

cardiagn.com

5.3. Electric Active Roll Stabilization (EARS)

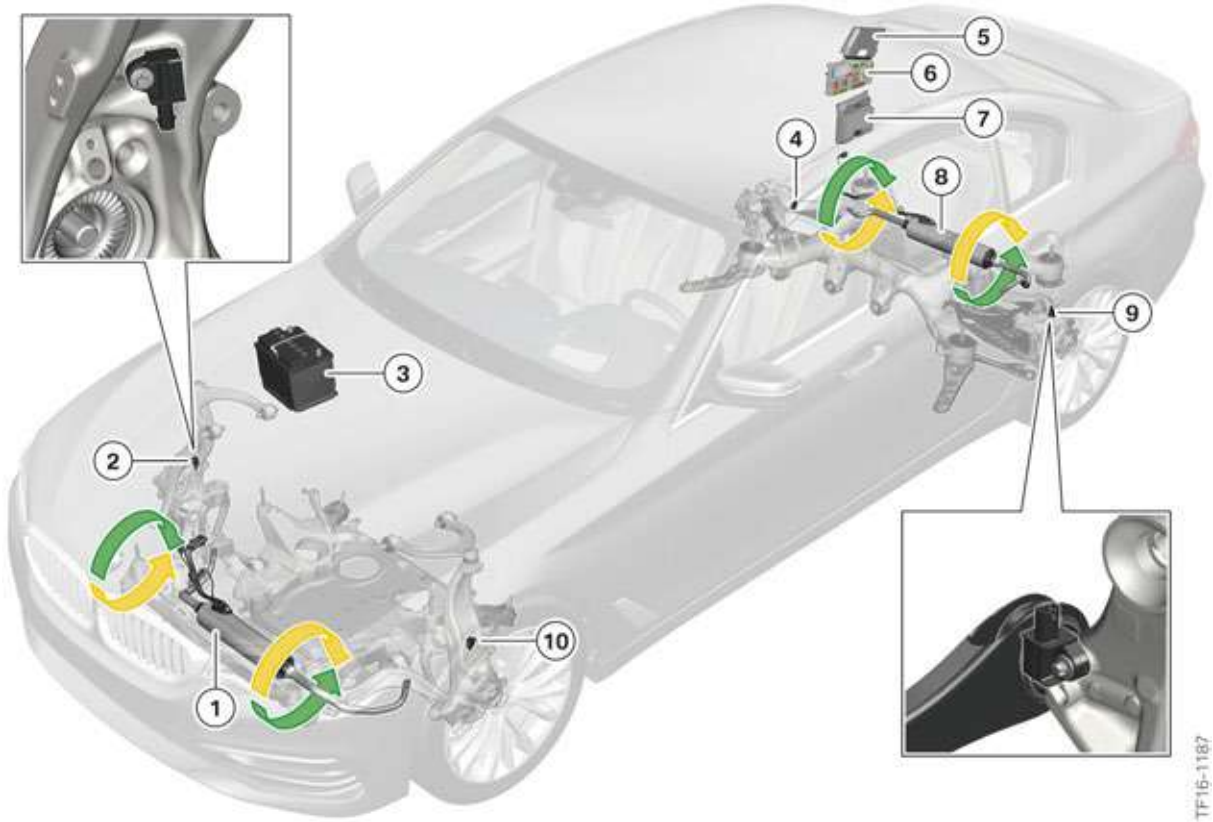

System overview of electric active stabilization in the G30

Index	Explanation
1	Electric active roll stabilization front (EARSV)
2	Front right vertical acceleration sensor
3	Auxiliary battery in the engine compartment
4	Rear right vertical acceleration sensor
5	Vertical Dynamics Platform (VDP)
6	Rear right power distribution box
7	Power Control Unit (PCU)
8	Electric active roll stabilization rear (EARSH)
9	Rear left vertical acceleration sensor
10	Front right vertical acceleration sensor

cardiagn.com

G30 Chassis and Suspension

5. Driving Stability Control

The electrical active stabilizers (EARS) had their series introduction in the G12. The stabilizers are available to the customer only as optional equipment in conjunction with further suspension control systems (see Highlights chapter). The system has been adopted in full in the G30 with the exception of the preview function.

The preview function, which was implemented on the G12 using the stereo camera, is not used on the G30. For this reason, the name of the optional equipment has been changed from “Executive Drive Pro” on the G12 to “Adaptive Drive” or “ Dynamic Handling Package” on the G30.

cardiagn.com

G30 Chassis and Suspension

5. Driving Stability Control

5.3.1. System wiring diagram for the voltage supply

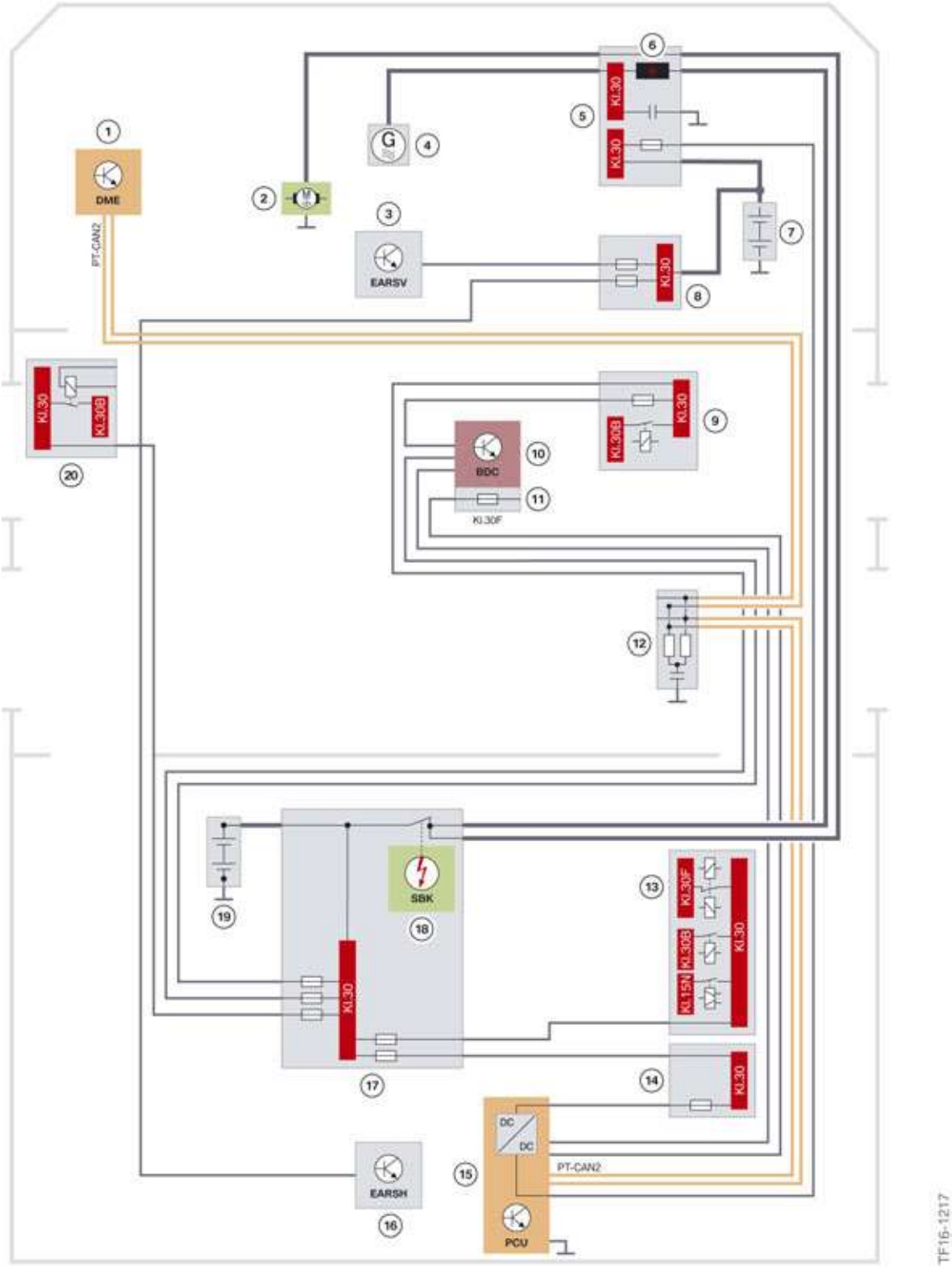

EARS system wiring diagram in the G30

cardiagn.com

G30 Chassis and Suspension

5. Driving Stability Control

Index	Explanation
1	Digital Motor Electronics (DME)
2	Starter motor
3	Electric active roll stabilization at the front (EARSV)
4	Alternator
5	Power distribution box, engine compartment
6	Jump start terminal point
7	Auxiliary battery in the engine compartment
8	Power distribution box, auxiliary battery, engine compartment
9	Power distribution box, front right
10	Body Domain Controller (BDC)
11	Fuse in the Body Domain Controller
12	CAN terminator
13	Power distribution box, rear
14	Fuse in the power distribution box
15	Power Control Unit (PCU)
16	Electric active roll stabilization at the rear (EARSH)
17	Battery power distribution box
18	Safety battery terminal
19	Battery
20	Power distribution box, front left (PHEV version only)

cardiagn.com

5.3.2. Current flow

The graphic below shows the control characteristics depending on the road surface or the route.

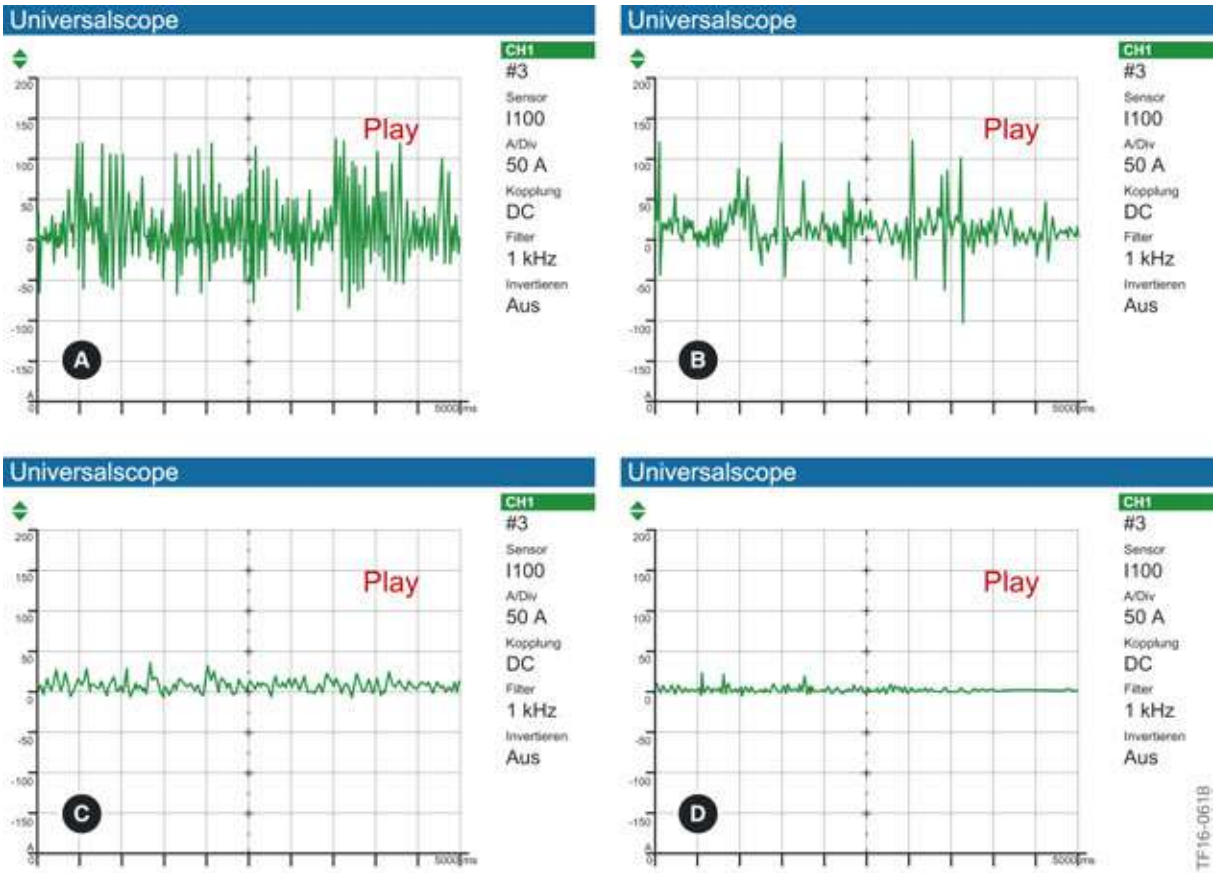

Current flow on the power supply line to the electrical active stabilizer in the G30

Index	Explanation
A	Rough road condition
B	Avoidance maneuver
C	Traffic circle
D	Smooth road condition

cardiagn.com

cardiagn.com

cardiagn.com

Bayerische Motorenwerke Aktiengesellschaft
Händlerqualifizierung und Training
Röntgenstraße 7
85716 Unterschleißheim, Germany