Jeep®

2018 Wrangler JK

OWNER'S MANUAL

VEHICLES SOLD IN CANADA

With respect to any Vehicles Sold in Canada, the name FCA US LLC shall be deemed to be deleted and the name FCA Canada Inc. used in substitution therefore.

DRIVING AND ALCOHOL

Drunken driving is one of the most frequent causes of accidents.

Your driving ability can be seriously impaired with blood alcohol levels far below the legal minimum. If you are drinking, don't drive. Ride with a designated non-drinking driver, call a cab, a friend, or use public transportation.

WARNING!
Driving after drinking can lead to an accident. Your perceptions are less sharp, your reflexes are slower, and your judgment is impaired when you have been drinking. Never drink and then drive.

This manual illustrates and describes the operation of features and equipment that are either standard or optional on this vehicle. This manual may also include a description of features and equipment that are no longer available or were not ordered on this vehicle. Please disregard any features and equipment described in this manual that are not on this vehicle.

FCA US LLC reserves the right to make changes in design and specifications, and/or make additions to or improvements to its products without imposing any obligation upon itself to install them on products previously manufactured.

Copyright © 2017 FCA US LLC

TABLE OF CONTENTS

SECTION		PAGE
1	INTRODUCTION	3
2	GRAPHICAL TABLE OF CONTENTS	9
3	GETTING TO KNOW YOUR VEHICLE	15
4	GETTING TO KNOW YOUR INSTRUMENT PANEL	177
5	SAFETY	203
6	STARTING AND OPERATING	273
7	IN CASE OF EMERGENCY	333
8	SERVICING AND MAINTENANCE	359
9	TECHNICAL SPECIFICATIONS	425
10	MULTIMEDIA	437
11	CUSTOMER ASSISTANCE	491
12	INDEX	497

INTRODUCTION

CONTENTS

■ INTRODUCTION 4
■ ROLLOVER WARNING 5
■ HOW TO USE THIS MANUAL 6
□ Essential Information 6
□ Symbols 7
■ WARNINGS AND CAUTIONS 8
■ VEHICLE MODIFICATIONS/ALTERATIONS 8

INTRODUCTION

Dear Customer, congratulations on selecting your new vehicle. Be assured that it represents precision workmanship, distinctive styling, and high quality.

This is a specialized utility vehicle. It can go places and perform tasks that conventional passenger vehicles are not intended. It handles and maneuvers differently from many passenger vehicles both on-road and off-road, so take time to become familiar with your vehicle. If equipped, the two-wheel drive version of this vehicle was designed for on-road use only. It is not intended for off-road driving or use in other severe conditions suited for a four-wheel drive vehicle. Before you start to drive this vehicle, read the Owner's Manual. Be sure you are familiar with all vehicle controls, particularly those used for braking, steering, transmission, and transfer case shifting. Learn how your vehicle handles on different road surfaces. Your driving skills will improve with experience. When driving off-road, or working the vehicle, don't overload the vehicle or expect the vehicle to overcome the natural laws of physics. Always observe federal, state, provincial and local laws wherever you drive. As with other vehicles of this type, failure to operate this vehicle correctly may result in loss of control or a collision. Refer to the "Driving Tips" section for further information.

This Owner's Manual has been prepared with the assistance of service and engineering specialists to acquaint you with the operation and maintenance of your vehicle. It is supplemented by Warranty Information, and customer oriented documents. In the attached Warranty Booklet you will find a description of the services that FCA offers to its customers, the Warranty Certificate and the details of the terms and conditions for maintaining its validity. Please take the time to read all of these publications carefully before driving your vehicle for the first time. Following the instructions, recommendations, tips, and important warnings in this manual will help assure safe and enjoyable operation of your vehicle.

This Owner's Manual describes all versions of this vehicle. Options and equipment dedicated to specific markets or versions are not expressly indicated in the text. Therefore, you should only consider the information which is related to the trim level, engine, and version that you have purchased. Any content introduced throughout the Owner's Information, that may or may not be applicable to your vehicle, will be identified with the wording "If Equipped". All data contained in this publication are intended to help you use your vehicle in the best possible way. FCA aims at a constant improvement of the vehicles produced. For this reason, it reserves the right to make changes to the model

described for technical and/or commercial reasons. For further information, contact an authorized dealer.

If applicable, refer to the owners manual supplement for related information.

NOTE: After reviewing the Owner's Information, it should be stored in the vehicle for convenient referencing, and remain with the vehicle when sold.

When it comes to service, remember that your authorized dealer knows your vehicle best, has factory-trained technicians and genuine MOPAR® parts, and cares about your satisfaction.

ROLLOVER WARNING

Utility vehicles have a significantly higher rollover rate than other types of vehicles. This vehicle has a higher ground clearance and a higher center of gravity than many passenger vehicles. It is capable of performing better in a wide variety of off-road applications. Driven in an unsafe manner, all vehicles can go out of control. Because of the higher center of gravity, if this vehicle is out of control it may roll over while some other vehicles may not.

Do not attempt sharp turns, abrupt maneuvers, or other unsafe driving actions that can cause loss of vehicle control. Failure to operate this vehicle safely may result in a collision, rollover of the vehicle, and severe or fatal injury. Drive carefully.

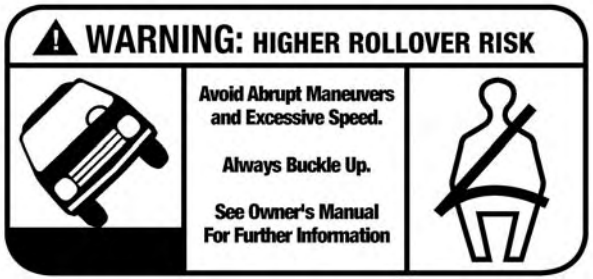

80bfe0f0

Rollover Warning Label

Failure to use the driver and passenger seat belts provided is a major cause of severe or fatal injury. In fact, the U.S. government notes that the universal use of existing seat belts could cut the highway death toll by 10,000 or more each year and could reduce disabling injuries by two million annually. In a rollover crash, an unbelted person is significantly more likely to die than a person wearing a seat belt. Always buckle up.

HOW TO USE THIS MANUAL

Essential Information

Consult the Table of Contents to determine which section contains the information you desire.

Since the specification of your vehicle depends on the items of equipment ordered, certain descriptions and illustrations may differ from your vehicle's equipment.

The detailed index at the back of this Owner's Manual contains a complete listing of all subjects.

Symbols

Consult the following table for a description of the symbols that may be used on your vehicle or throughout this Owner's Manual:

WARNINGS AND CAUTIONS

This Owner's Manual contains **WARNINGS** against operating procedures that could result in a collision, bodily injury and/or death. It also contains **CAUTIONS** against procedures that could result in damage to your vehicle. If you do not read this entire Owner's Manual, you may miss important information. Observe all Warnings and Cautions.

VEHICLE MODIFICATIONS/ALTERATIONS

WARNING!
Any modifications or alterations to this vehicle could seriously affect its roadworthiness and safety and may lead to a collision resulting in serious injury or death.

GRAPHICAL TABLE OF CONTENTS

CONTENTS

- FRONT VIEW 10
- REAR VIEW. 11
- INSTRUMENT PANEL 12
- INTERIOR 13

FRONT VIEW

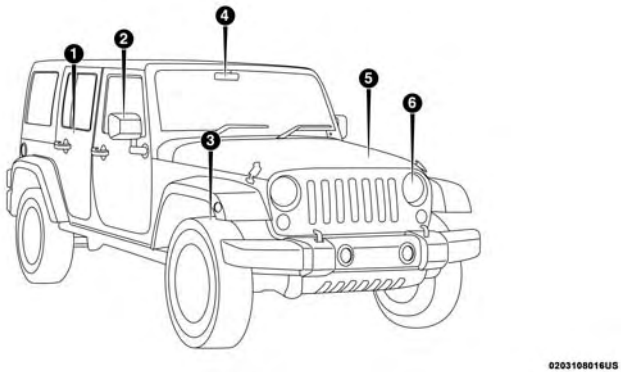

Front View

1 — Doors
2 — Exterior Mirrors
3 — Wheels/Tires
4 — Rear View Mirror
5 — Hood/Engine Compartment
6 — Headlights

REAR VIEW

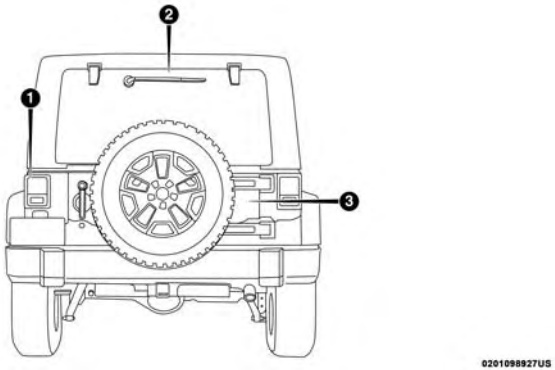

Rear View

1 — Rear Lights
2 — Rear Windshield Wiper — If Equipped
3 — Swing Gate

INSTRUMENT PANEL

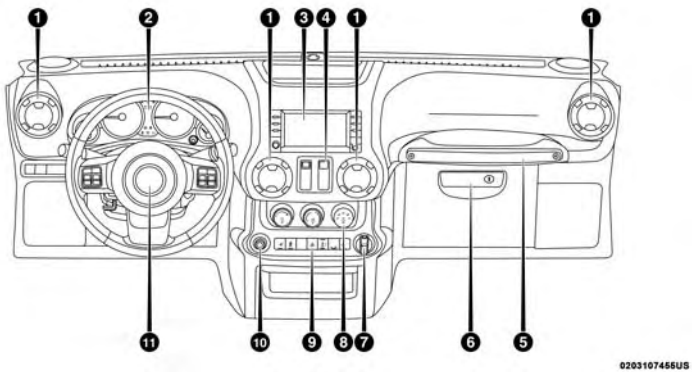

Instrument Panel

1 — Air Outlet
2 — Instrument Cluster
3 — Radio
4 — Power Window Switches
5 — Assist Handle
6 — Glove Compartment
7 — Power Outlet
8 — Climate Controls
9 — Lower Switch Bank
10 — Power Mirror Switch — If Equipped
11 — Horn

INTERIOR

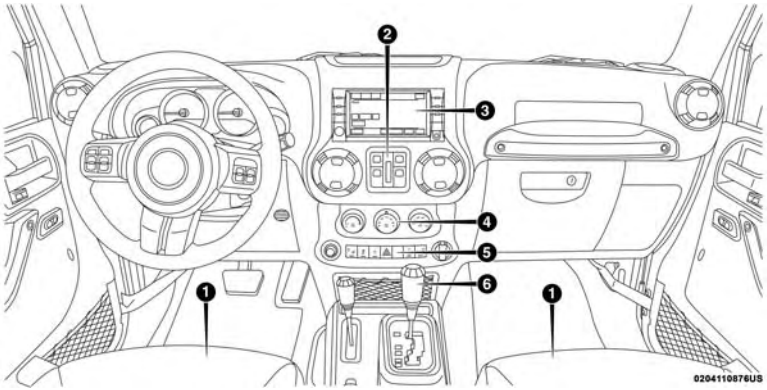

Interior Features

1 — Seats
2 — Power Window Switches
3 — Radio
4 — Climate Controls
5 — Switch Panel
6 — Transmission Gear Selector

GETTING TO KNOW YOUR VEHICLE

CONTENTS

■ KEY FOB 19
- □ Key Fob 19

■ IGNITION SWITCH 21
- □ Ignition Key Removal 21

■ REMOTE STARTING SYSTEM — IF EQUIPPED . . .22
- □ How To Use Remote Start. 22
- □ Remote Start Abort Message 23
- □ To Enter Remote Start 23
- □ To Exit Remote Start Mode Without Driving The Vehicle 24
- □ To Exit Remote Start Mode And Drive The Vehicle 24
- □ General Information 24

■ SENTRY KEY 25
- □ Replacement Key Fobs 25
- □ Customer Key Programming 26
- □ General Information 27

■ VEHICLE SECURITY ALARM — IF EQUIPPED . . .27
- □ Rearming The System 27
- □ To Arm The System 28
- □ To Disarm The System 28

■ DOORS 28
- □ Manual Door Locks 29
- □ Power Door Locks — If Equipped 30
- □ Child-Protection Door Lock System — Rear Doors 31
- □ Upper Half Door Window Removal — If Equipped 32
- □ Front Door Removal 32
- □ Rear Door Removal (Four-Door Models) 34

■ SEATS 37
□ Manual Front Seats 37
□ Heated Seats — If Equipped 39
□ 60/40 Split Folding Rear Seat — Four-Door Models 40
□ Front Passenger Easy Entry Seat — Two-Door Models 41
□ Tip ‘n Slide Seats — Two-Door Models 42
□ Removing the Rear Seat — Two-Door Models . . .44
■ HEAD RESTRAINTS 46
□ Front Head Restraints 46
□ Rear Head Restraints — 2 Door Model 47
□ Rear Head Restraints — 4 Door Model 48
■ STEERING WHEEL 48
□ Tilt Steering Column 48
■ MIRRORS 49
□ Inside Day/Night Mirror — If Equipped 49
□ Automatic Dimming Mirror — If Equipped 50
□ Outside Mirrors 50
□ Power Mirrors — If Equipped 51
□ Heated Mirrors — If Equipped 51
□ Vanity Mirrors 52
■ EXTERIOR LIGHTS 52
□ Headlights And Parking Lights 52
□ Daytime Running Lights — If Equipped 52
□ High/Low Beam Switch 53
□ Flash-To-Pass 53
□ Automatic Headlights — If Equipped 53
□ Front Fog Lights 53
□ Turn Signals 54
□ Lane Change Assist — If Equipped 54
□ Lights-On Reminder. 54
■ INTERIOR LIGHTS 55
□ Courtesy/Reading Lights 55
□ Cargo Lamp 56

■ WINDSHIELD WIPERS AND WASHERS 57
□ Windshield Wiper Operation. 57
□ Rear Window Wiper/Washer — If Equipped 59
■ CLIMATE CONTROLS 60
□ Manual Climate Control Overview 60
□ Automatic Climate Control Overview 64
□ Automatic Temperature Control (ATC) — If Equipped 68
□ Operating Tips 69
■ POWER WINDOWS — IF EQUIPPED 70
□ Wind Buffeting 71
■ DUAL TOP — TWO-DOOR MODELS — IF EQUIPPED 72
□ Removing The Soft Top — Two-Door Models. . . .72
□ Installing The Soft Top — Two-Door Models 73
■ DUAL TOP — FOUR-DOOR MODELS — IF EQUIPPED 75
□ Removing The Soft Top — Four-Door Models . . .75
□ Installing The Soft Top — Four-Door Models 78
■ FREEDOM TOP THREE-PIECE MODULAR HARD TOP — IF EQUIPPED 81
□ Front Panel(s) Removal 82
□ Freedom Top Storage Bag. 84
□ Front Panel(s) Installation. 87
□ Front Panel(s) Installation With Rear Hard Top Removed 88
□ Rear Hard Top Removal 88
□ Rear Hard Top Installation 91
■ DOOR FRAME. 92
□ Door Frame Removal. 92
□ Door Frame Installation — Two-Door Models — If Equipped 94
□ Door Frame Installation — Four-Door Models — If Equipped 95
■ SOFT TOP — TWO-DOOR MODELS 98
□ Quick Steps To Lowering The Soft Top. 100

- Quick Steps To Raising The Soft Top 104
- Lowering The Soft Top 109
- Raising The Soft Top. 118

■ SUNRIDER (TWO-DOOR MODELS) — IF EQUIPPED 127
- Opening The Sunrider 127
- Closing The Sunrider 129

■ SOFT TOP — FOUR-DOOR MODELS 129
- Quick Steps For Lowering The Soft Top 131
- Quick Steps For Raising The Soft Top. 136
- Folding Down The Soft Top 141
- Putting Up The Soft Top 151

■ SUNRIDER (FOUR-DOOR MODELS) — IF EQUIPPED 160
- Opening The Sunrider 161
- Closing The Sunrider 163

■ FOLDING WINDSHIELD 163
- Lowering The Windshield And Removing Side Bars 164
- Raising The Windshield And Replacing Side Bars 167

■ HOOD 168
- Opening The Hood 168
- Closing The Hood 169

■ REAR SWING GATE 169

■ INTERNAL EQUIPMENT 170
- Storage 170
- Cupholders 172
- Electrical Power Outlets 172
- Power Inverter — If Equipped 175

KEY FOB

Your vehicle uses a key start ignition system. The ignition system consists of a Remote Keyless Entry (RKE) key fob with an ignition switch.

Key Fob

The key fob allows you to lock or unlock the doors and liftgate from distances up to approximately 66 ft (20 m) using a handheld key fob. The key fob does not need to be pointed at the vehicle to activate the system.

NOTE: In the ON/RUN position, the lock button is disabled. Only the unlock button is enabled.

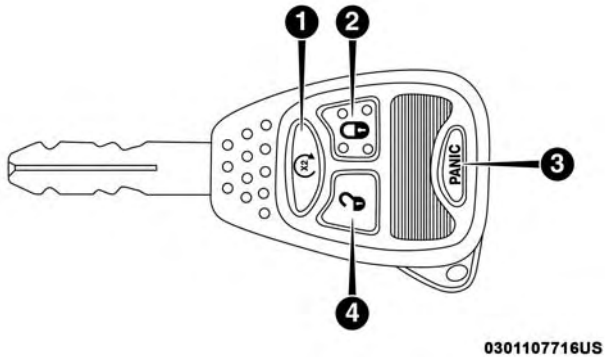

Key Fob

1 — Remote Start Button — If Equipped
2 — Lock Button
3 — PANIC Button
4 — Unlock Button

To Unlock The Doors And Swing Gate

Push and release the key fob unlock button once to unlock the driver's door only, or twice to unlock all the doors and swing gate. When the key fob unlock button is pushed, the Illuminated Entry will initiate, and the turn signal lights will flash twice.

To Lock The Doors And Swing Gate

Push and release the lock button on the key fob to lock all doors. The turn signals will flash, and the horn will chirp once to acknowledge the lock signal.

Key Fob Battery Replacement

The recommended replacement battery is CR2032.

NOTE: Perchlorate Material – special handling may apply. See www.dtsc.ca.gov/hazardouswaste/perchlorate .

1. With the key fob buttons facing down, use a flat blade screwdriver to pry the two halves of the key fob apart. Use **extreme care** not to damage the seal or internal components.

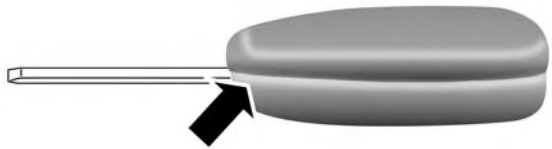

Separating Key Fob Halves

2. Remove and replace the battery. Avoid touching the new battery with your fingers. Skin oils may cause battery deterioration. If you touch a battery, clean it with rubbing alcohol.
3. To reassemble the key fob case, snap the two halves together.

Programming Additional Key Fobs

If you do not have a programmed key fob, contact your authorized dealer for details.

Refer to “Sentry Key” in “Getting To Know Your Vehicle” for further information.

General Information

The following regulatory statement applies to all Radio Frequency (RF) devices equipped in this vehicle:

This device complies with Part 15 of the FCC Rules and with Industry Canada license-exempt RSS standard(s). Operation is subject to the following two conditions:

1. This device may not cause harmful interference.
2. This device must accept any interference received, including interference that may cause undesired operation.

NOTE: Changes or modifications not expressly approved by the party responsible for compliance could void the user’s authority to operate the equipment.

IGNITION SWITCH

Ignition Key Removal

1. Place the gear selector in PARK (if equipped with an automatic transmission).
2. Turn the ignition switch to the ACC (Accessory) position.
3. Push the key and cylinder inward and rotate the key to the LOCK position.
4. Remove the key from the ignition switch lock cylinder.

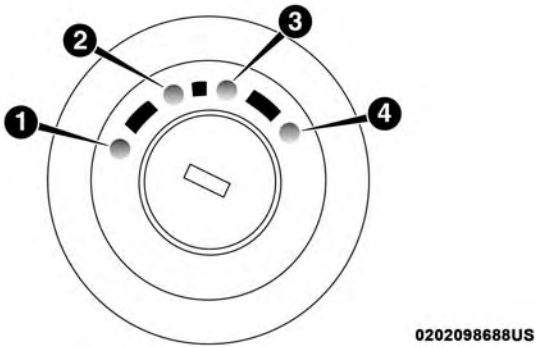

Ignition Switch Positions

1 — LOCK
2 — ACC (ACCESSORY)
3 — ON/RUN
4 — START

WARNING!

- **Before exiting a vehicle, always shift the automatic transmission into PARK or the manual transmission into FIRST gear or REVERSE, apply the parking brake, then turn the engine OFF, remove the key fob from the vehicle and lock your vehicle.**
- **Never leave children alone in a vehicle, or with access to an unlocked vehicle.**
- **Allowing children to be in a vehicle unattended is dangerous for a number of reasons. A child or others could be seriously or fatally injured. Children should be warned not to touch the parking brake, brake pedal or the gear selector.**
- **Do not leave the key fob in or near the vehicle, or in a location accessible to children. A child could operate power windows, other controls, or move the vehicle.**
- **Do not leave children or animals inside parked vehicles in hot weather. Interior heat build-up may cause serious injury or death.**

CAUTION!

An unlocked vehicle is an invitation for thieves. Always remove key fob from the vehicle and lock all doors when leaving the vehicle unattended.

REMOTE STARTING SYSTEM — IF EQUIPPED

This system uses the key fob to start the engine conveniently from outside the vehicle while still maintaining security. The system has a range of approximately 300 ft (91 m).

NOTE:

- The vehicle must be equipped with an automatic transmission to be equipped with Remote Start.
- Obstructions between the vehicle and key fob may reduce this range.

How To Use Remote Start

All of the following conditions must be met before the engine will remote start:

- Gear selector in PARK
- Doors closed
- Hood closed

- Hazard switch off
- Brake switch inactive (brake pedal not pushed)
- Ignition key removed from ignition
- Battery at an acceptable charge level
- PANIC button not pushed
- System not disabled from previous remote start event
- Vehicle security alarm not active

WARNING!

- **Do not start or run an engine in a closed garage or confined area. Exhaust gas contains Carbon Monoxide (CO) which is odorless and colorless. Carbon Monoxide is poisonous and can cause serious injury or death when inhaled.**
- **Keep key fobs away from children. Operation of the Remote Start System, windows, door locks or other controls could cause serious injury or death.**

Remote Start Abort Message

The following messages will display in the instrument cluster display if the vehicle fails to remote start or exits remote start prematurely:

- Remote Start Aborted — Door Open
- Remote Start Aborted — Hood Open
- Remote Start Aborted — Fuel Low
- Remote Start Aborted — Swing Gate Open
- Remote Start Aborted — System Fault

The instrument cluster display message stays active until the ignition is turned to the ON/RUN position.

To Enter Remote Start

Push and release the remote start button on the key fob twice within five seconds. The vehicle doors will lock, the parking lights will flash and the horn will chirp twice (if programmed). Then, the engine will start and the vehicle will remain in the remote start mode for a 15-minute cycle.

NOTE:

- The park lamps will turn on and remain on during remote start mode.
- For security, power window operation is disabled when the vehicle is in the remote start mode.

- The engine can be started two consecutive times (two 15-minute cycles) with the key fob. However, the ignition switch must be cycled to the ON/RUN position before you can repeat the start sequence for a third cycle.

Remote start will also cancel if any of the following occur:

- The engine stalls or RPM exceeds 2500.
- Any engine warning lamps come on.
- The hood is opened.
- The hazard switch is pushed.
- The transmission is moved out of PARK.
- The brake pedal is pushed.

To Exit Remote Start Mode Without Driving The Vehicle

Push and release the remote start button one time or allow the engine to run for the entire 15-minute cycle.

NOTE: To avoid unintentional shut downs, the system will disable the one time push of the remote start button for two seconds after receiving a valid remote start request.

To Exit Remote Start Mode And Drive The Vehicle

Before the end of the 15-minute cycle, push and release the unlock button on the key fob to unlock the doors and disarm the vehicle security alarm (if equipped). Then, insert the key into the ignition and place the ignition in the ON/RUN position.

NOTE: The ignition must be placed in the ON/RUN position in order to drive the vehicle.

General Information

The following regulatory statement applies to all Radio Frequency (RF) devices equipped in this vehicle:

This device complies with Part 15 of the FCC Rules and with Industry Canada license-exempt RSS standard(s). Operation is subject to the following two conditions:

1. This device may not cause harmful interference.
2. This device must accept any interference received, including interference that may cause undesired operation.

NOTE: Changes or modifications not expressly approved by the party responsible for compliance could void the user's authority to operate the equipment.

SENTRY KEY

The Sentry Key Immobilizer System prevents unauthorized vehicle operation by disabling the engine. The system does not need to be armed or activated. Operation is automatic, regardless of whether the vehicle is locked or unlocked.

The system uses key fobs that have an embedded electronic chip (transponder) to prevent unauthorized vehicle operation. Therefore, only key fobs that are programmed to the vehicle can be used to start and operate the vehicle. The system will shut the engine off in two seconds if someone uses an invalid key to try to start the engine.

NOTE: A key fob that has not been programmed is also considered an invalid key, even if it is cut to fit the ignition or lock cylinder for that vehicle.

During normal operation, after placing the ignition in the on position, the vehicle security light will turn on for three seconds for a bulb check. If the light remains on after the bulb check, it indicates that there is a problem with the electronics. In addition, if the vehicle security light begins to flash after the bulb check, it indicates that someone used an invalid key to try to start the engine. Either of these conditions will result in the engine being shut off after two seconds.

If the vehicle security light turns on during normal vehicle operation (vehicle running for longer than ten seconds), it indicates that there is a fault in the electronics. Should this occur, have the vehicle serviced as soon as possible by an authorized dealer.

CAUTION!

The Sentry Key Immobilizer system is not compatible with some aftermarket remote starting systems. Use of these systems may result in vehicle starting problems and loss of security protection.

All of the key fobs provided with your new vehicle have been programmed to the vehicle electronics.

Replacement Key Fobs

NOTE: Only key fobs that are programmed to the vehicle electronics can be used to start and operate the vehicle. Once a key fob is programmed to a vehicle, it cannot be programmed to any other vehicle.

CAUTION!

Always remove the Sentry Keys from the vehicle and lock all doors when leaving the vehicle unattended.

Duplication of key fobs may be performed at an authorized dealer or by following the customer key programming procedure. This procedure consists of programming a blank key fob to the vehicle electronics. A blank key fob is one that has never been programmed.

NOTE: When having the Sentry Key Immobilizer System serviced, bring all vehicle key fobs with you to an authorized dealer.

Customer Key Programming

If you have two valid key fobs, you can program new key fobs to the Sentry Key Immobilizer system by performing the following procedure:

1. Cut the additional key(s) to match the ignition and lock cylinder key code.
2. Insert the first valid key into the ignition. Place the ignition in the ON/RUN position for at least three seconds, but no longer than 15 seconds. Then, place the ignition in the LOCK position and remove the first key.
3. Insert the second valid key into the ignition. Place the ignition in the ON/RUN position within 15 seconds. After 10 seconds, a chime will sound. In addition, the Vehicle Security Light will begin to flash. Place the ignition in the LOCK position and remove the second key.
4. Insert a blank key into the ignition. Place the ignition in the ON/RUN position within 60 seconds. After 10 seconds, a single chime will sound. In addition, the Vehicle Security Light will stop flashing. To indicate that programming is complete, the Vehicle Security Light will turn on again for three seconds and then turn off.

The new key is programmed. The key fob will also be programmed during this procedure.

Repeat this procedure to program up to eight keys. If you do not have a programmed key fob, contact your authorized dealer for details.

NOTE: If a programmed key fob is lost, see your authorized dealer to have all remaining key fobs erased from the system's memory. This will prevent the lost key from starting your vehicle. The remaining key fobs must then be reprogrammed. All vehicle key fobs must be taken to an authorized dealer at the time of service to be reprogrammed.

General Information

The following regulatory statement applies to all radio frequency (RF) devices equipped in this vehicle:

This device complies with Part 15 of the FCC Rules and with Industry Canada license-exempt RSS standard(s). Operation is subject to the following two conditions:

1. This device may not cause harmful interference, and
2. This device must accept any interference received, including interference that may cause undesired operation.

NOTE: Changes or modifications not expressly approved by the party responsible for compliance could void the user's authority to operate the equipment.

VEHICLE SECURITY ALARM — IF EQUIPPED

The vehicle security alarm monitors the vehicle doors, swing gate, and ignition for unauthorized operation. While the vehicle security alarm is armed, interior switches for door locks are disabled. The vehicle security alarm provides both audible and visible signals when alarming. The horn will sound, the headlights will turn on, the park lamps and/or turn signals will flash repeatedly for three minutes. If the disturbance is still present (driver's door, passenger door, other doors, ignition) after three minutes, the headlights, park lamps and/or turn signals will flash for an additional 15 minutes.

NOTE: The Panic Alarm and the vehicle security alarm are quite different. Please take a moment to activate the Panic Alarm and the vehicle security alarm to hear the differences in the horn. In case one should go off in the future, you will need to know which mode has been activated in order to deactivate it.

Rearming The System

If something triggers the alarm, and no action is taken to disarm it, the vehicle security alarm will turn off the horn after three minutes, turn off all of the visual signals after 15 minutes, and then the vehicle security alarm will rearm itself.

To Arm The System

The vehicle security alarm will set when you use the Remote Keyless Entry key fob to lock the doors and swing gate, or when you use the power door lock switch while the door is open. After all the doors are locked and closed, the vehicle security light (located on the instrument cluster) will flash rapidly for about 16 seconds to signal that the vehicle security alarm is arming. During this 16-second arming period, opening any door or the swing gate will cancel the arming. If the vehicle security alarm is successfully set, the vehicle security light will flash at a slower rate to indicate the vehicle security alarm is armed.

To Disarm The System

To disarm the vehicle security alarm, you will need to push the unlock button on the key fob, or turn the ignition switch to the ON/RUN position. If something has triggered the vehicle security alarm in your absence, the horn will sound three times, and the exterior lights blink three times when you unlock the doors. Check the vehicle for tampering.

The vehicle security alarm is designed to protect your vehicle; however, you can create conditions where the vehicle security alarm will arm unexpectedly. If you remain in the vehicle and lock the doors with the key fob, once the vehicle security alarm is armed (after 16 seconds), when you pull the door handle to exit, the alarm will sound. If this occurs, push the unlock button on the key fob to disarm the vehicle security alarm. You may also accidentally disarm the vehicle security alarm by unlocking the driver's door with the key and then locking it. The door will be locked but the vehicle security alarm will not arm.

NOTE:

- Unlocking the doors with the manual door lock plungers or the driver's door lock cylinder will not disarm the vehicle security alarm.
- When the vehicle security alarm is armed, the interior power door lock switches will not unlock the doors.

DOORS

CAUTION!

Careless handling and storage of the removable door panels may damage the seals, causing water to leak into the vehicle's interior.

Manual Door Locks

All doors are equipped with an interior rocker-type door lock lever. To lock a door when leaving your vehicle, push the rocker lever forward to the lock position and close the door. To unlock the door, push the rocker lever rearward.

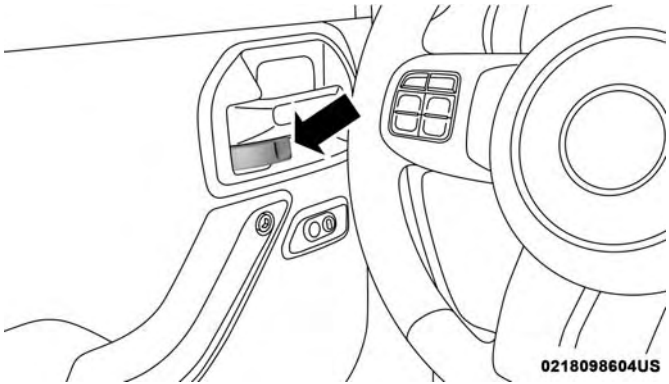

Manual Door Lock (Full Frame Doors)

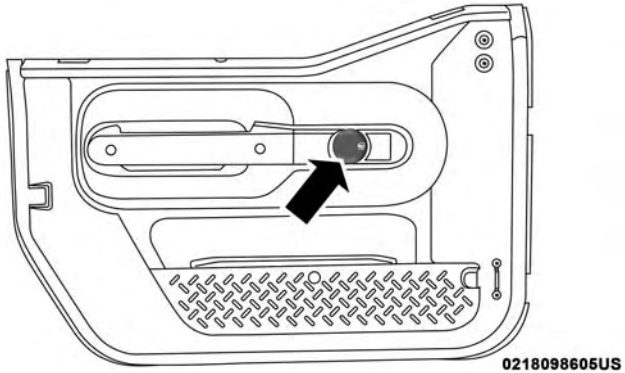

Manual Door Lock (Half Doors)

NOTE: The ignition key that is used to start the vehicle is used to lock or unlock the doors, swing gate, glove compartment, and console storage.

WARNING!

- **For personal security reasons and safety in a collision, lock the vehicle doors when you drive, as well as when you park and exit the vehicle.**

(Continued)

WARNING! *(Continued)*

- **When exiting the vehicle, always remove the key from the ignition and lock your vehicle. Unsupervised use of vehicle equipment may cause severe personal injuries and death.**
- **Never leave children alone in a vehicle, or with access to an unlocked vehicle.**
- **Allowing children to be in a vehicle unattended is dangerous for a number of reasons. A child or others could be seriously or fatally injured. Children should be warned not to touch the parking brake, brake pedal or the gear selector.**
- **Do not leave the key fob in or near the vehicle or in a location accessible to children. A child could operate power windows, other controls, or move the vehicle.**

Power Door Locks — If Equipped

The power door lock switch is located on each front door panel. Push the switch forward to lock the doors, and rearward to unlock the doors.

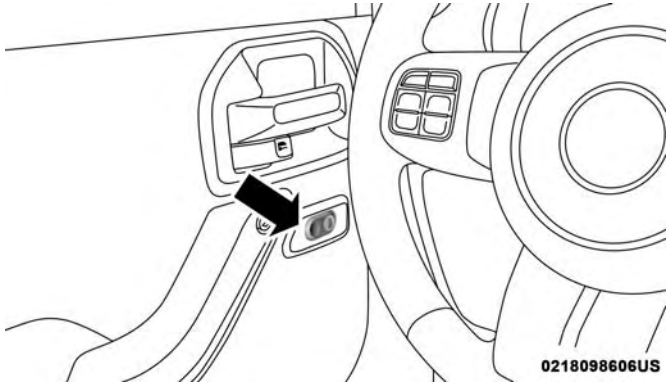

Power Door Lock Switch

WARNING!

- **For personal security reasons and safety in a collision, lock the vehicle doors when you drive, as well as when you park and exit the vehicle.**
- **When exiting the vehicle, always remove the key from the ignition and lock your vehicle. Unsupervised use of vehicle equipment may cause severe personal injuries and death.**

(Continued)

WARNING! *(Continued)*

- **Never leave children alone in a vehicle, or with access to an unlocked vehicle.**
- **Allowing children to be in a vehicle unattended is dangerous for a number of reasons. A child or others could be seriously or fatally injured. Children should be warned not to touch the parking brake, brake pedal or the gear selector.**
- **Do not leave the key fob in or near the vehicle or in a location accessible to children. A child could operate power windows, other controls, or move the vehicle.**

Child-Protection Door Lock System — Rear Doors

To provide a safer environment for small children riding in the rear seats, the rear doors are equipped with Child-Protection Door Lock system.

To Engage Or Disengage The Child-Protection Door Lock System

1. Open the rear door.
2. Insert the tip of the ignition key into the lock and rotate to the lock or unlock position.
3. Repeat steps one and two for the opposite rear door.

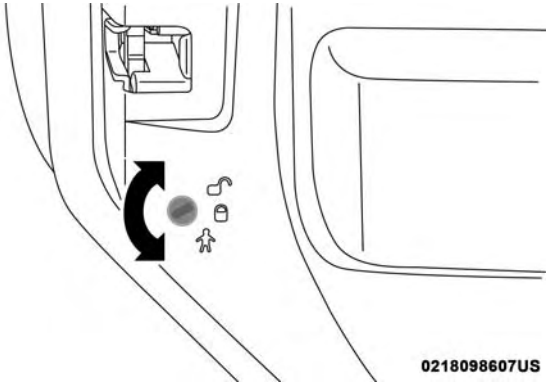

Child Protection Door Lock Function

WARNING!

Avoid trapping anyone in a vehicle in a collision. Remember that the rear doors can only be opened from the outside when the Child-Protection locks are engaged (locked).

NOTE: For emergency exit with the system engaged, move the rocker lever rearward (unlocked position), roll down the window and open the door with the outside door handle.

Upper Half Door Window Removal — If Equipped

Grasp the half door window and pull upward.

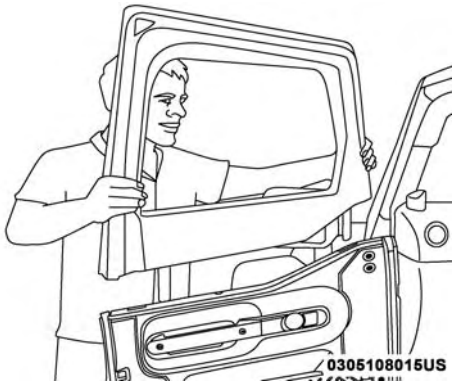

Upper Half Door Window

Upper Half Door Window Installation — If Equipped

1. Grasp the half door window and line up the pins with the pockets in the lower door.
2. Push down to ensure the half door window is fully seated.

Front Door Removal

WARNING!

Do not drive your vehicle on public roads with the doors removed as you will lose the protection they can provide. This procedure is furnished for use during off-road operation only.

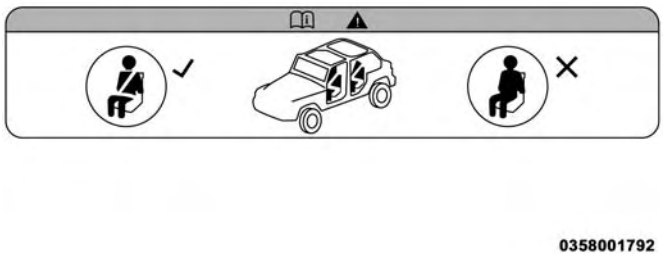

Door Removal Warning Label

NOTE: Hinge pin can break if overtightened during door reinstall (Max Torque: 10 N·m / 7.5 ft· lb).

1. Roll down the glass window to prevent any damage.
2. Remove the hinge pin screws from the upper and lower outside hinges (using a #T50 Torx head driver).

NOTE: The hinge pin screws and nuts can be stowed in the rear cargo tray located under the rear loadfloor.

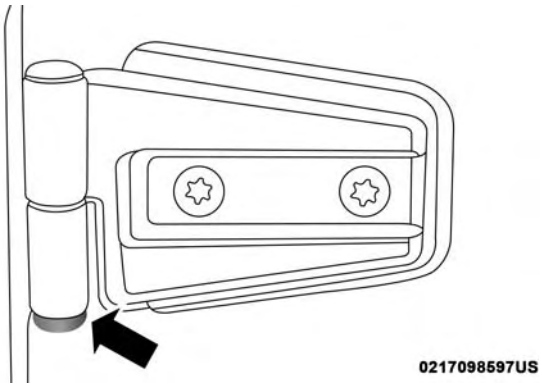

Hinge Pin Screw

3. Unplug the wiring harness connector under the instrument panel by pushing the tab at the base of the connector and pulling down to disconnect.

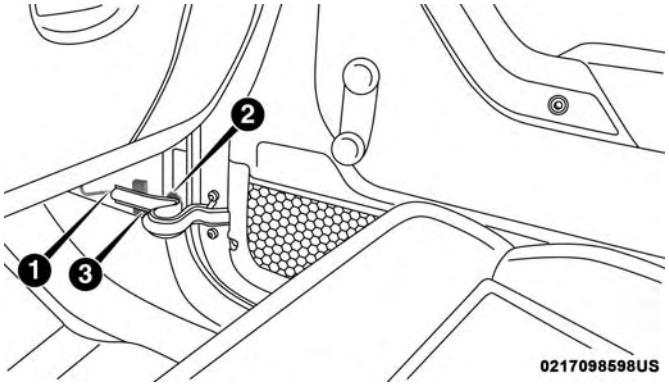

Door Strap/Harness Location

1 — Wiring Harness (follow the harness up and under the instrument panel to the connector)
2 — Body Hook
3 — Door/Harness Strap

4. Unhook the door strap from the body hook. Be careful not to allow the door to swing fully open as the mirror may damage the paint.
5. With the door open, lift the door to clear the hinge pins from their hinges and remove the door.

NOTE: Doors are heavy; use caution when removing them.

To reinstall the door(s), perform the previous steps in the opposite order.

Rear Door Removal (Four-Door Models)

WARNING!
Do not drive your vehicle on public roads with the doors removed as you will lose the protection they can provide. This procedure is furnished for use during off-road operation only.

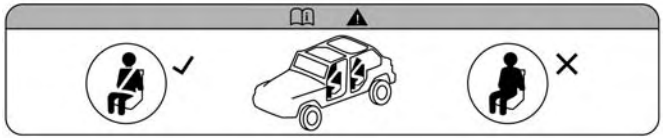

Door Removal Warning Label

NOTE: Hinge pin can break if overtightened during door reinstall (Max Torque: 10 N·m / 7.5 ft· lb).

1. Roll down the glass window to prevent any damage.
2. Remove the hinge pin screws from the upper and lower outside hinges (using a #T50 Torx head driver).

NOTE: The hinge pin screws and nuts can be stowed in the rear cargo tray located under the rear load floor.

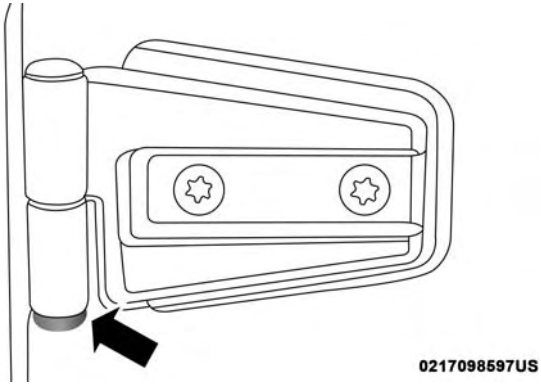

Hinge Pin Screw

3. Slide the front seat(s) fully forward.
4. Remove the trim access door from the bottom of the B-pillar.

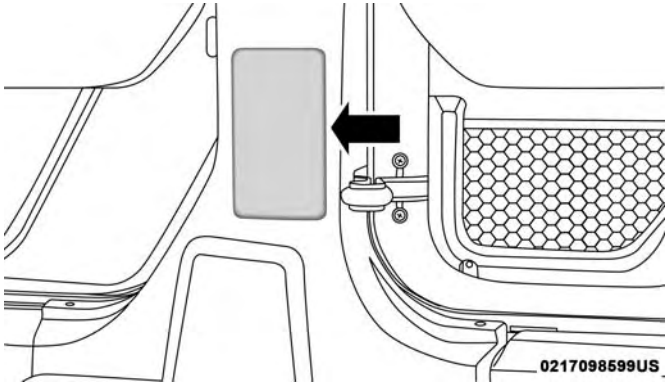

Trim Access Door

5. Unplug the wiring harness connector.

NOTE: Squeeze the tab on the base of the connector. This will unlock the connector tab, allowing the harness to be disconnected.

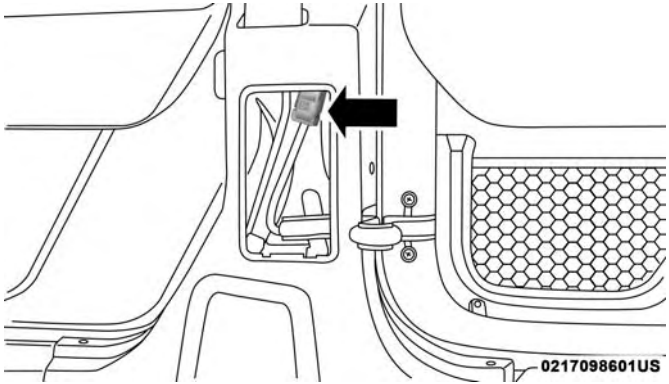

Connector Latched

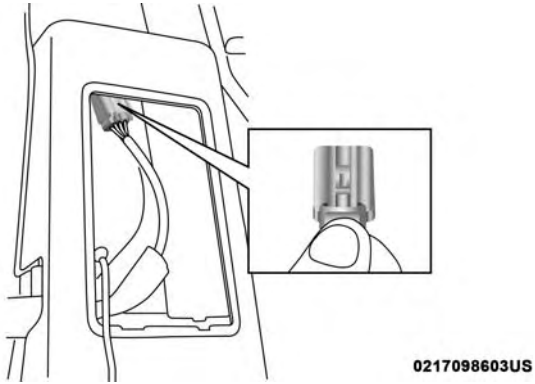

Connector Unplugged

6. Unhook the door strap from the body hook.
7. With the door open, lift the door to clear the hinge pins from their hinges and remove the door.

NOTE: Doors are heavy; use caution when removing them.

To reinstall the door(s), perform the previous steps in the opposite order.

SEATS

Seats are a part of the Occupant Restraint System of the vehicle.

WARNING!

- **It is dangerous to ride in a cargo area, inside or outside of a vehicle. In a collision, people riding in these areas are more likely to be seriously injured or killed.**
- **Do not allow people to ride in any area of your vehicle that is not equipped with seats and seat belts. In a collision, people riding in these areas are more likely to be seriously injured or killed.**
- **Be sure everyone in your vehicle is in a seat and using a seat belt properly.**

Manual Front Seats

Front Seat Adjustment

The seat can be adjusted forward or rearward by using a bar located by the front of the seat cushion, near the floor. While sitting in the seat, lift up on the bar located under the seat cushion and move the seat forward or rearward. Release the bar once you have reached the desired position. Then, using body pressure, move forward and rearward on the seat to be sure that the seat adjusters have latched.

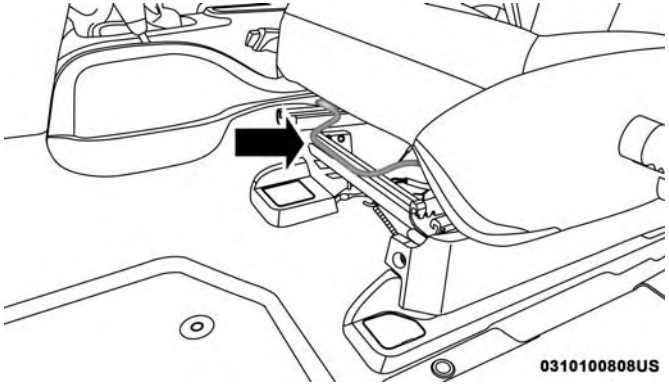

Adjusting Bar Location

WARNING!

- **Adjusting a seat while driving may be dangerous. Moving a seat while driving could result in loss of control which could cause a collision and serious injury or death.**
- **Seats should be adjusted before fastening the seat belts and while the vehicle is parked. Serious injury or death could result from a poorly adjusted seat belt.**

Manual Seat Height Adjustment — If Equipped

The driver's seat height can be raised or lowered by using the ratcheting handle, located on the outboard side of the seat. Pull upward on the handle to raise the seat, push downward on the handle to lower the seat.

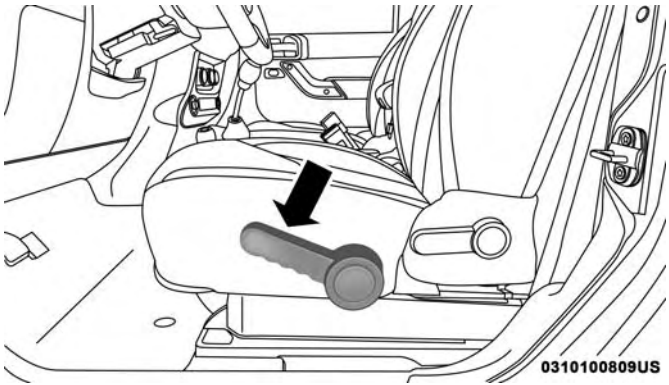

Seat Height Adjustment

Front Seatback Recline

Lean forward before lifting the handle, then lean back to the desired position and release the handle. Lift the handle to return the seatback to an upright position.

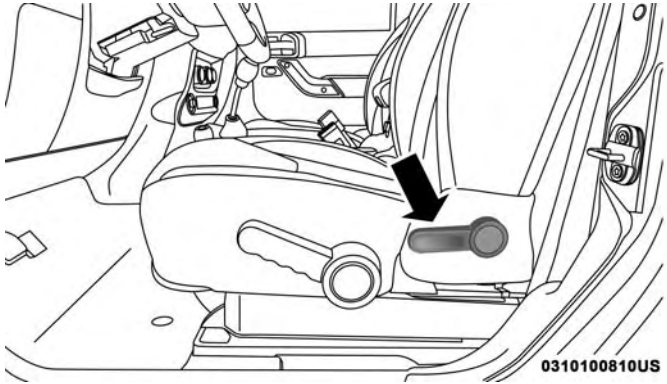

Recline Lever

WARNING!

Do not ride with the seatback reclined so that the shoulder belt is no longer resting against your chest. In a collision you could slide under the seat belt, which could result in serious injury or death.

Heated Seats — If Equipped

On some models, the front driver and passenger seats may be equipped with heaters in both the seat cushions and seatbacks.

There are two heated seat switches that allow the driver and passenger to operate the seats independently. The controls for each seat are located on a switch bank near the bottom center of the instrument panel.

You can choose from HI, LO or OFF heat settings. Amber indicator lights in each switch indicate the level of heat in use. Two indicator lights will illuminate for HI, one for LO and none for OFF.

Push the switch once to select HI-level heating. Push the switch a second time to select LO-level heating. Push the switch a third time to shut the heating elements OFF.

When the HI-level setting is selected, the heater will provide a boosted heat level during the initial stages of operation. Then, the heat output will drop to the normal HI-level. If the HI-level setting is selected, the system will automatically switch to LO-level after approximately 30 minutes of continuous operation. At that time, the number of illuminated LEDs changes from two to one, indicating the change. The LO-level setting will turn OFF automatically after approximately 30 minutes.

NOTE: When a heat setting is selected, heat will be felt within two to five minutes.

WARNING!

- **Persons who are unable to feel pain to the skin because of advanced age, chronic illness, diabetes, spinal cord injury, medication, alcohol use, exhaustion or other physical condition must exercise care when using the seat heater. It may cause burns even at low temperatures, especially if used for long periods of time**
- **Do not place anything on the seat or seatback that insulates against heat, such as a blanket or cushion. This may cause the seat heater to overheat. Sitting in a seat that has been overheated could cause serious burns due to the increased surface temperature of the seat.**

60/40 Split Folding Rear Seat — Four-Door Models

To provide additional storage area, each rear seat can be folded flat to allow for extended cargo space.

NOTE:

- Prior to folding the rear seat, it may be necessary to reposition the front seat to its mid-track position.
- Be sure that the front seats are fully upright and positioned forward. This will allow the rear seat to fold down easily.

WARNING!

- **It is extremely dangerous to ride in a cargo area, inside or outside of a vehicle. In a collision, people riding in these areas are more likely to be seriously injured or killed.**
- **Do not allow people to ride in any area of your vehicle that is not equipped with seats and seat belts.**
- **Be sure everyone in your vehicle is in a seat and using a seat belt properly.**

To Fold Down The Rear Seat

Locate the release lever (upper outboard side of seat), and lift it upward until the seatback releases.

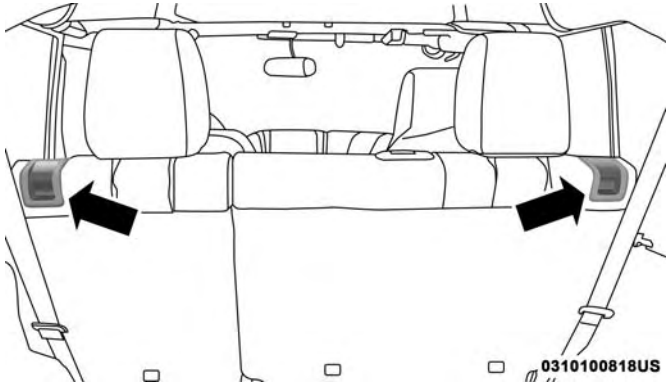

Release Levers

Slowly fold down the seatback.

NOTE: You may experience deformation in the seat cushion from the seat belt buckles if the seats are left folded for an extended period of time. This is normal. By simply opening the seats to the open position, the seat cushion will return to its normal shape over time.

To Raise The Rear Seat

Raise the seatback and lock it into place. If interference from the cargo area prevents the seatback from fully locking, you will have difficulty returning the seat to its proper position.

NOTE: If the rear seatback is not fully latched, the center shoulder belt will not be able to be extended for use. If you cannot extend the center shoulder belt, make sure your seatback is fully latched.

WARNING!

Be certain that the seatback is securely locked into position. If the seatback is not securely locked into position the seat will not provide the proper stability for child seats and/or passengers. An improperly latched seat could cause serious injury.

Front Passenger Easy Entry Seat — Two-Door Models

Pull upward on the recline lever (toward the rear of the vehicle) and slide the entire seat forward.

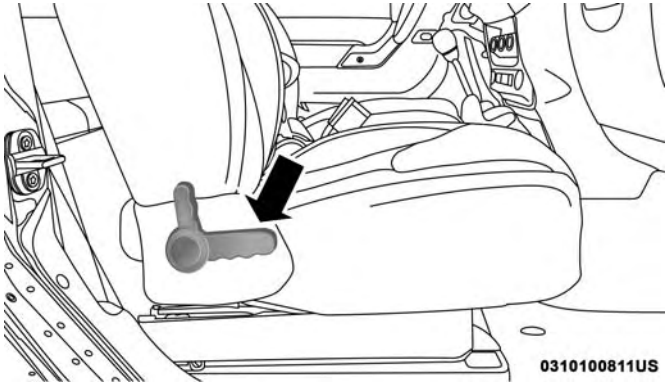

Easy Entry Lever

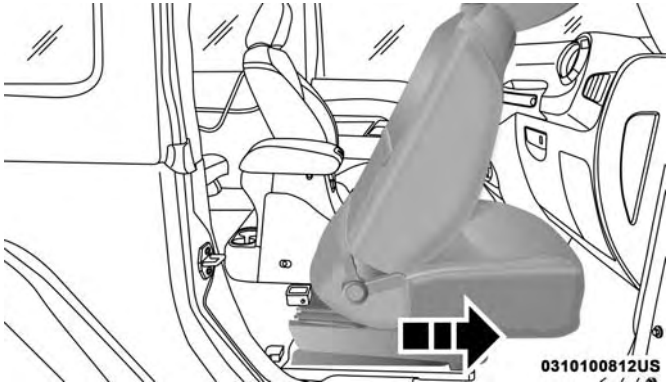

Easy Entry Seat

To return the seat to a sitting position, rotate the seatback upright until it locks and push the seat rearward until the track locks.

NOTE:

- The front passenger seats have a track memory, which returns the seat to just past the halfway point of the track regardless of its original position.
- The recliner and easy entry levers should not be used during the automatic returning of the seat to its sitting position.

Tip 'n Slide Seats — Two-Door Models

This feature allows the front seats to be rotated toward the instrument panel to allow easier entry into the rear seats.

Driver's Seat

Pull upward on the recline lever and bring the seatback to its full forward position.

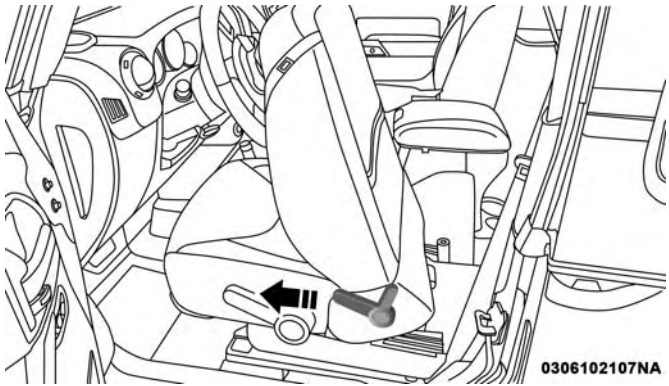

Recline Lever

Rotate the entire seat assembly toward the instrument panel.

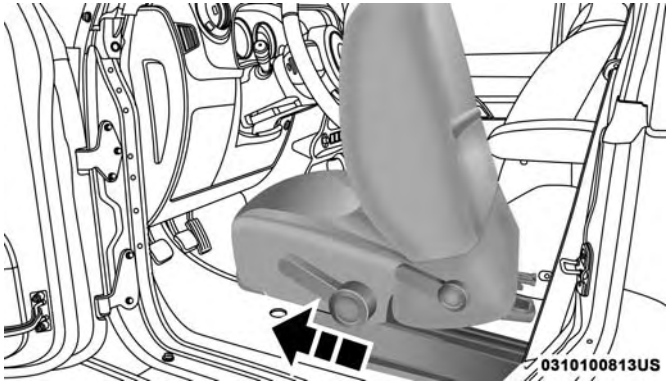

Tip 'n Slide

Passenger Seat

In addition to Easy Entry, the front passenger seat is also equipped with Tip 'n Slide. This feature allows for easier entry for rear passengers.

Pull upward on the recline lever and slide the entire seat forward (Easy Entry).

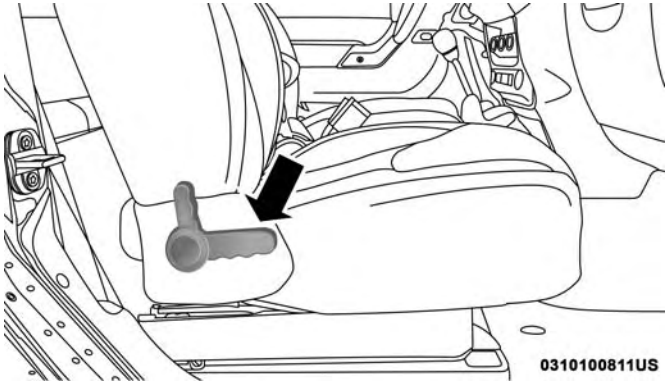

Easy Entry Lever

With the seat forward, pull the entire seat assembly toward the instrument panel.

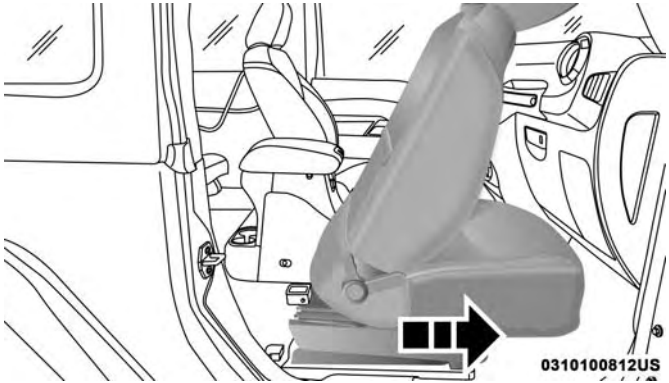

Tip 'n Slide

Removing the Rear Seat — Two-Door Models

NOTE:

- Prior to folding the rear seat, it may be necessary to reposition the front seats.
- Be sure that the front seats are fully upright and positioned forward. This will allow the rear seat to fold down easily.

1. Lift the seatback release lever and fold the seatback forward.

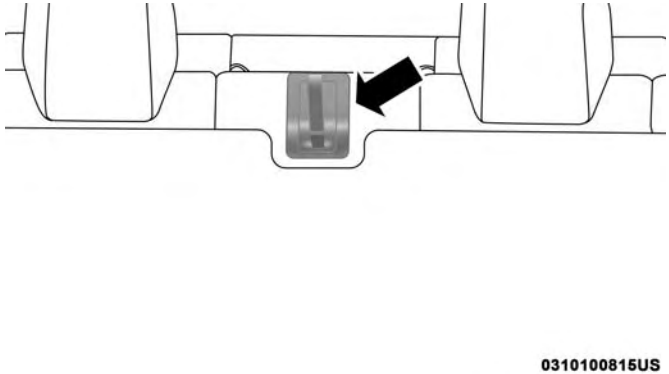

Rear Seat Release

2. Slowly flip the entire seat forward.

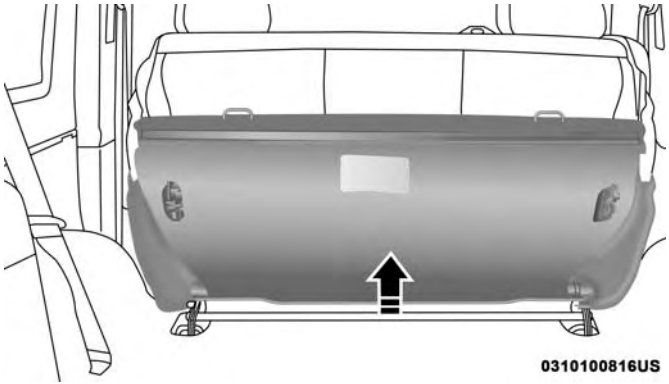

Folding Rear Seat

WARNING!

Do not drive the vehicle with the seat in the forward tumble position. The seat must be latched to all floor attachments when the vehicle is in motion.

3. Push down on the release bar on each side, and pull the seat out and away from the lower bracket.
4. Remove the seat from the vehicle.

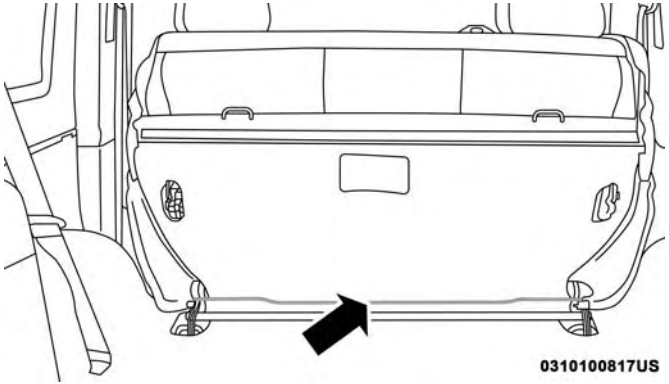

Release Bar Location

WARNING!

- **It is extremely dangerous to ride in a cargo area, inside or outside of a vehicle. In a collision, people riding in these areas are more likely to be seriously injured or killed.**
- **Do not allow people to ride in any area of your vehicle that is not equipped with seats and seat belts.**
- **Be sure everyone in your vehicle is in a seat and using a seat belt properly.**

(Continued)

WARNING! *(Continued)*

- **In a collision, you or others in your vehicle could be injured if seats are not properly latched to their floor attachments. Always be sure that the seats are fully latched.**

Replacing The Rear Seat — Two-Door Models

Reverse the steps for removing the seat.

WARNING!

- **To help protect against personal injury, passengers should not be seated in the rear cargo area with the rear seat folded down or removed from the vehicle.**
- **The rear cargo space is intended for load carrying purposes only, not for passengers who should sit in seats and use seat belts.**

HEAD RESTRAINTS

Head restraints are designed to reduce the risk of injury by restricting head movement in the event of a rear impact. Head restraints should be adjusted so that the top of the head restraint is located above the top of your ear.

WARNING!

- **All occupants, including the driver, should not operate a vehicle or sit in a vehicle's seat until the head restraints are placed in their proper positions in order to minimize the risk of neck injury in the event of a crash.**
- **Head restraints should never be adjusted while the vehicle is in motion. Driving a vehicle with the head restraints improperly adjusted or removed could cause serious injury or death in the event of a collision.**

Front Head Restraints

To raise the head restraint, pull upward on the head restraint. To lower the head restraint, push the adjustment button located on the base of the head restraint, and push downward on the head restraint.

To remove the head restraint, raise it as far as it can go then push the adjustment button and the release button at the base of each post while pulling the head restraint up. To reinstall the head restraint, put the head restraint posts into the holes and push downward. Then adjust it to the appropriate height.

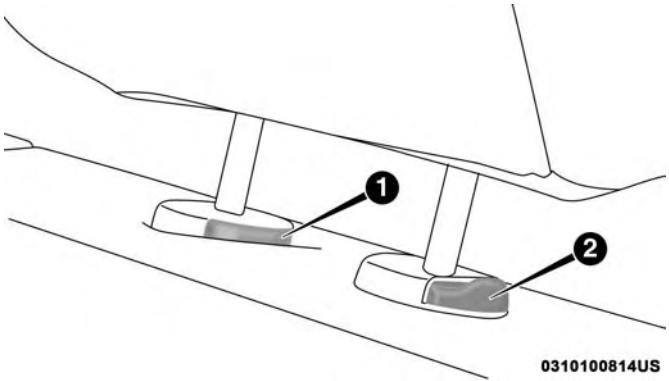

Front Head Restraint

1 — Release Button
2 — Adjustment Button

WARNING!

- **A loose head restraint thrown forward in a collision or hard stop could cause serious injury or death to occupants of the vehicle. Always securely stow removed head restraints in a location outside the occupant compartment.**
- **ALL the head restraints MUST be reinstalled in the vehicle to properly protect the occupants. Follow the re-installation instructions above prior to operating the vehicle or occupying a seat.**

NOTE: Do not reposition the head restraint 180 degrees to the incorrect position in an attempt to gain additional clearance to the back of the head.

Rear Head Restraints — 2 Door Model

The rear seat head restraints are not adjustable. They can be removed to make it easier to take out the rear seat. To remove the head restraint, push the button on each of the two head restraint guides and pull upward on the head restraint. Replace the head restraint before driving the vehicle with passengers in the rear seat. To replace the head restraint, insert the head restraint rods into the guides and push downward on the head restraint until locked. Refer to

"Occupant Restraint Systems" in "Safety" for information on child seat tether routing.

WARNING!

- **Do not drive the vehicle without the rear seat head restraints installed while passengers are occupying the rear seat. In a collision, people riding in this area without the head restraints installed are more likely to be seriously injured or killed.**
- **A loose head restraint thrown forward in a collision or hard stop could cause serious injury or death to occupants of the vehicle. Always securely stow removed head restraints in a location outside the occupant compartment.**
- **ALL the head restraints MUST be reinstalled in the vehicle to properly protect the occupants. Follow the reinstallation instructions above prior to operating the vehicle or occupying a seat.**

NOTE: Do not reposition the head restraint 180 degrees to the incorrect position in an attempt to gain additional clearance to the back of the head.

Rear Head Restraints — 4 Door Model

The rear seat is equipped with nonadjustable head restraints. Refer to "Occupant Restraint Systems" in "Safety" for information on child seat tether routing.

STEERING WHEEL

Tilt Steering Column

This feature allows you to tilt the steering column upward or downward. The tilt lever is located on the steering column, below the turn signal lever.

To Adjust The Tilt Steering Column

1. Push down on the lever to unlock the steering column.
2. With one hand firmly on the steering wheel, move the steering column up or down, as desired.
3. Pull upwards on the lever to lock the column firmly in place.

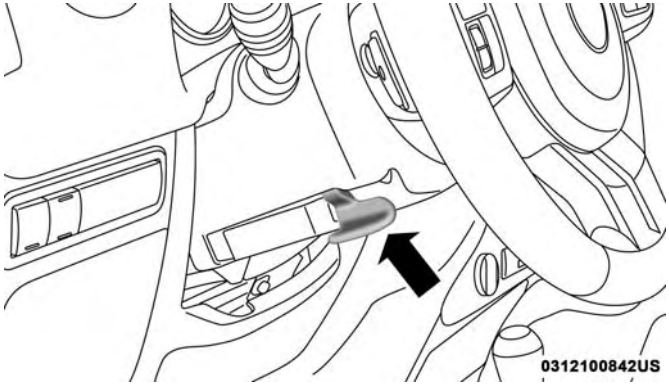

Tilt Steering Column Lever

WARNING!

Do not adjust the steering column while driving. Adjusting the steering column while driving or driving with the steering column unlocked, could cause the driver to lose control of the vehicle. Failure to follow this warning may result in serious injury or death.

MIRRORS

Inside Day/Night Mirror — If Equipped

The mirror head can be adjusted up, down, left, and right for various drivers. The mirror should be adjusted to center on the view through the rear window.

Headlight glare from vehicles behind you can be reduced by moving the small control under the mirror to the night position (toward the rear of the vehicle). The mirror should be adjusted while set in the day position (toward the windshield).

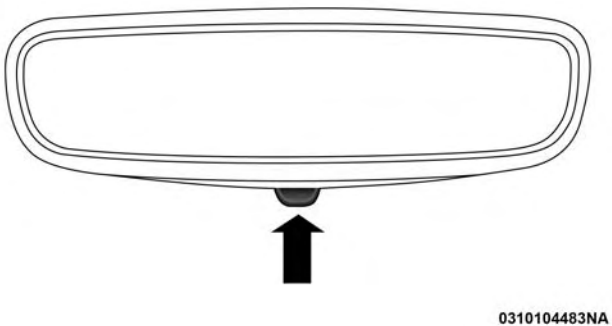

Adjusting Rearview Mirror

Automatic Dimming Mirror — If Equipped

This mirror automatically adjusts for headlight glare from vehicles behind you. You can turn the feature on or off by pushing the button at the base of the mirror. A light to the left of the button will illuminate to indicate when the dimming feature is activated. The sensor to the right of the button does not illuminate.

NOTE: This feature is disabled when the vehicle is in REVERSE.

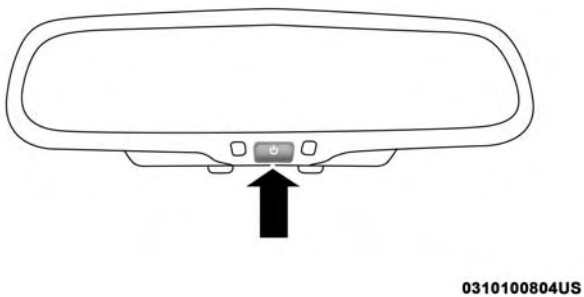

Automatic Dimming Mirror

CAUTION!

To avoid damage to the mirror during cleaning, never spray any cleaning solution directly onto the mirror. Apply the solution onto a clean cloth and wipe the mirror clean.

Outside Mirrors

To receive maximum benefit, adjust the outside mirror(s) to center on the adjacent lane of traffic with a slight overlap of the view obtained on the inside mirror.

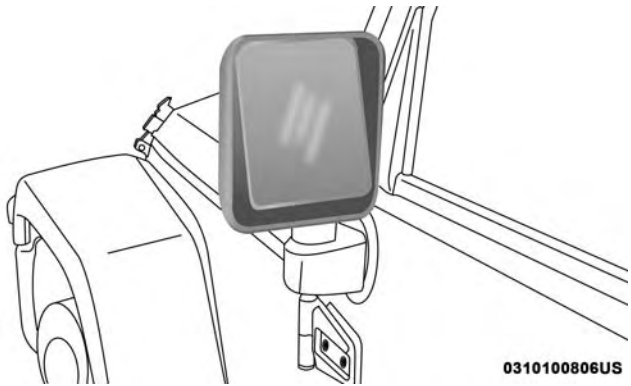

Outside Rearview Mirror

WARNING!

Vehicles and other objects seen in the passenger side convex mirror will look smaller and farther away than they really are. Relying too much on your passenger side mirror could cause you to collide with another vehicle or other object. Use your inside mirror when judging the size or distance of a vehicle seen in the passenger side mirror.

Power Mirrors — If Equipped

The power mirror switch is located on the center of the instrument panel, below the climate controls. A rotary knob selects the left mirror, right mirror or off position.

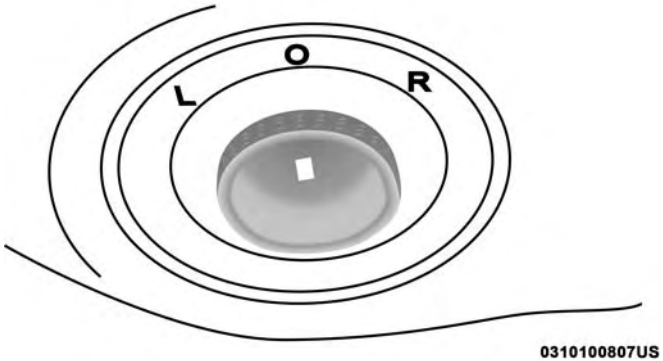

Power Mirror Switch

After selecting a mirror, move the knob in the same direction you want the mirror to move. Use the center off position to guard against accidentally moving a mirror position.

Heated Mirrors — If Equipped

These mirrors are heated to melt frost or ice. This feature will be activated whenever you turn on the rear window defroster (if equipped). Refer to “Climate Controls” in “Getting To Know Your Vehicle” for further information.

Vanity Mirrors

Vanity mirrors are located on the sun visors. To use the mirrors, rotate the sun visor down and swing the mirror cover upward.

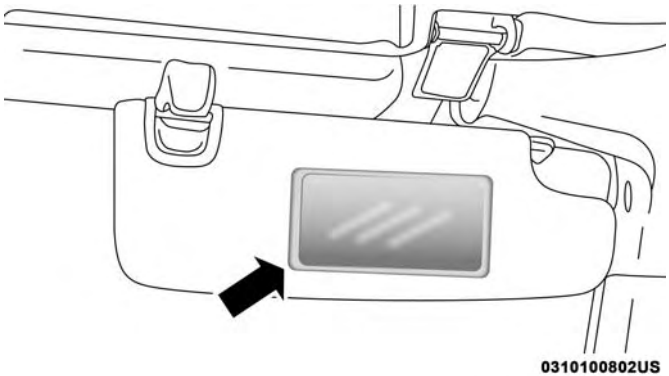

Vanity Mirror

EXTERIOR LIGHTS

Headlights And Parking Lights

Turn the end of the multifunction lever to the first detent for parking light operation. Turn to the second detent for headlight operation.

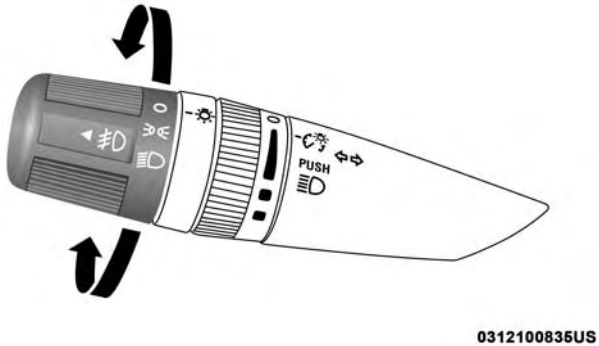

Headlight Switch

Daytime Running Lights — If Equipped

The headlights come on at a low intensity level when shifted into any position other than PARK (auto transmission) or when the vehicle begins to move (manual transmission).

NOTE: The Daytime Running Light, on the same side of the vehicle as the active turn signal, will turn off automatically when a turn signal is in operation and turn on again when the turn signal is not operating.

High/Low Beam Switch

Push the multifunction lever toward the instrument panel to switch the headlights to high beams. Pulling the multifunction lever back toward the steering wheel will return the lights to low beams.

Flash-To-Pass

You can signal another vehicle with your headlights by lightly pulling the multifunction lever toward you. This will cause the high beam headlights to turn on, and remain on, until the lever is released.

Automatic Headlights — If Equipped

This system automatically turns the headlights on or off according to ambient light levels. To turn the system on, turn the end of the multifunction lever to the AUTO position (third detent). When the system is on, the Headlight Time Delay feature is also on. This means the headlights will stay on for up to 90 seconds after you turn the ignition switch to the LOCK position. To turn the Automatic System off, turn the end of the multifunction lever out of the AUTO position.

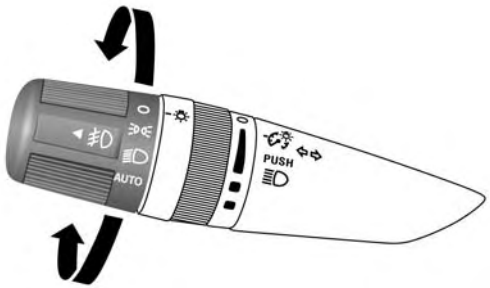

0312100836US

Headlight Switch

NOTE: The engine must be running before the headlights will turn on in the Automatic mode.

Front Fog Lights

The front fog light switch is located on the multifunction lever. To activate the front fog lights, turn on the parking or low beam headlights and pull out the end of the lever.

NOTE: The fog lights will only operate with the parking lights or the headlights on low beam. Selecting high beam headlights will turn off the fog lights.

Turn Signals

Move the multifunction lever up or down and the arrows on each side of the instrument cluster flash to show proper operation of the front and rear turn signal lights.

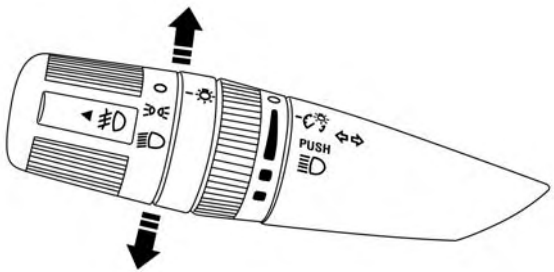

0312100837US

Turn Signal Operation

NOTE:

- If either light remains on and does not flash, or there is a very fast flash rate, check for a defective outside light bulb. If an indicator fails to light when the lever is moved, it would suggest that the indicator bulb is defective.
- A tone will chime if the turn signals are left on for more than 1 mile (2 km).

Lane Change Assist — If Equipped

Tap the lever up or down once, without moving beyond the detent, and the turn signal (right or left) will flash three times then automatically turn off.

Lights-On Reminder

If the headlights, parking lights or cargo lights are left on after the ignition is turned OFF, a chime will sound when the driver's door is opened.

INTERIOR LIGHTS

Courtesy/Reading Lights

Two courtesy/reading lights are located in the bottom of the rearview mirror. You can turn these lights on and off from the switches in the mirror or from the dimmer control in the multifunction lever. These lights are also controlled automatically by the Illuminated Entry System.

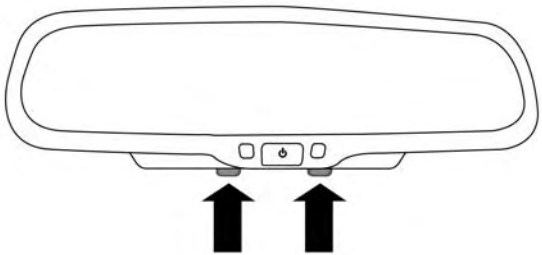

0312100839US

Courtesy/Reading Light Switches

A courtesy light is also found in the rear of the center console. You can turn this light on and off from the dimmer control in the multifunction lever. This light is also controlled automatically by the Illuminated Entry System.

Instrument Panel Dimmer

Rotate the center portion of the lever to the extreme bottom position to fully dim the instrument panel lights and prevent the interior lights from illuminating when a door is opened.

Rotate the center portion of the lever up to increase the brightness of the instrument panel lights when the parking lights or headlights are on.

Rotate the center portion of the lever upward to the next detent position to brighten the odometer and radio when the parking lights or headlights are on.

Rotate the center portion of the lever upward to the last detent to turn on the interior lighting.

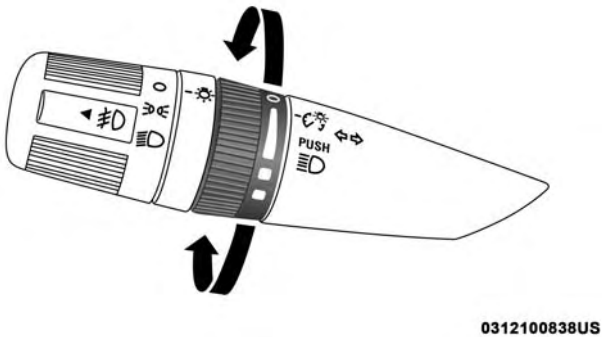

Dimmer Control

Cargo Lamp

The courtesy and dome lights will turn on when the front doors are opened, by rotating the control for the dimmer switch on the multifunction lever fully upward, or if equipped, when the unlock button is pushed on the Remote Keyless Entry key fob.

The sports bar reading lights (available on four-door models) can be turned on by pushing the switches, located on either side of the lens. Push a switch a second time to turn the light off.

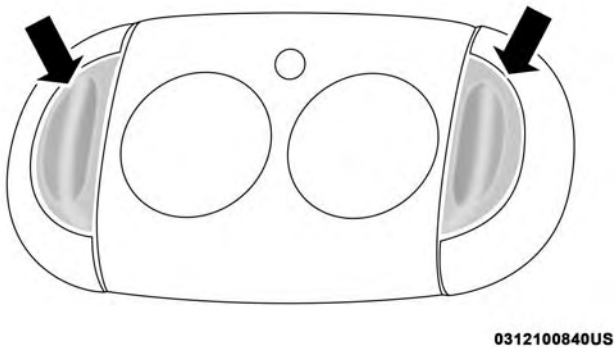

Sports Bar Reading Light

The rear cargo light may be turned on by pushing the lens. Push the lens a second time to turn the light off.

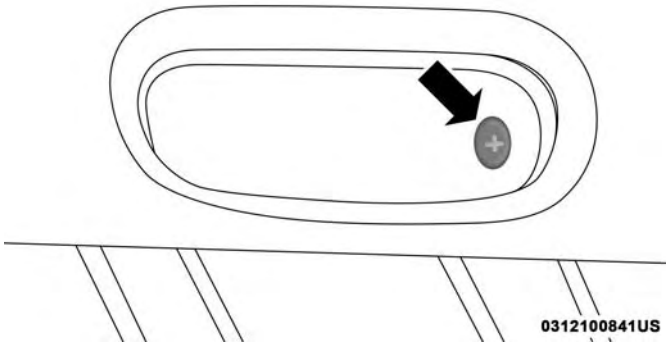

Rear Cargo Light

When a door is open and the interior lights are on, rotating the dimmer control to the extreme bottom position will cause all the interior lights to turn off. This is also known as the "Party" mode because it allows the doors to stay open for extended periods of time without discharging the vehicle's battery.

WINDSHIELD WIPERS AND WASHERS

The windshield wiper/washer control lever is located on the right side of the steering column. The front wipers are operated by rotating a switch, located at the end of the lever. For information on using the rear window wiper/washer, refer to "Rear Window Wiper/Washer" in this section for more information.

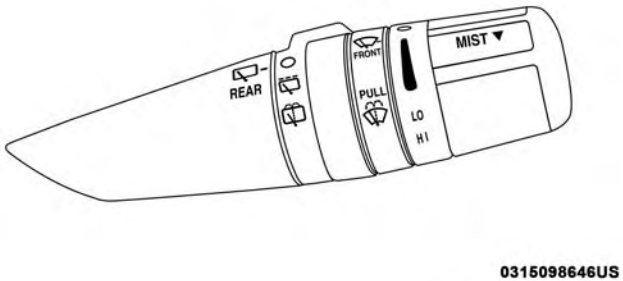

Windshield Wiper/Washer Lever

Windshield Wiper Operation

Rotate the end of the lever upward to the second detent past the intermittent settings for low-speed wiper operation.

Rotate the end of the lever upward to the third detent past the intermittent settings for high-speed wiper operation.

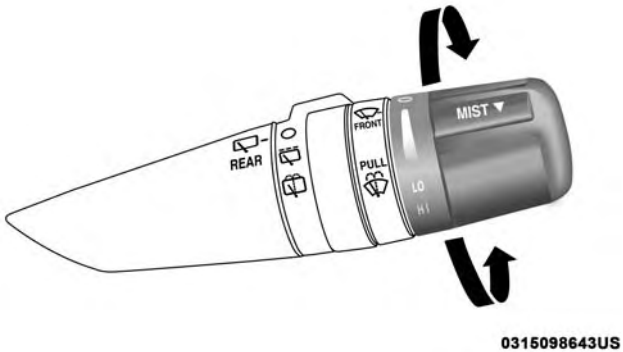

Front Wiper Control

CAUTION!

In cold weather, always turn off the wiper switch and allow the wipers to return to the park position before turning off the engine. If the wiper switch is left on and the wipers freeze to the windshield, damage to the wiper motor may occur when the vehicle is restarted.

Intermittent Wiper System

Use the intermittent wiper when weather conditions make a single wiping cycle, with a variable pause between cycles, desirable. Rotate the end of the lever to the first detent position for one of five intermittent settings. The delay cycle can be set anywhere between 1 to 18 seconds.

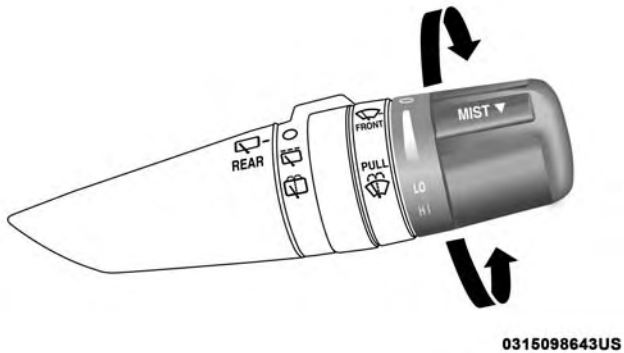

Front Wiper Control

NOTE: The wiper delay times depend on vehicle speed. If the vehicle is moving less than 10 mph (16 km/h), delay times will be doubled.

Windshield Washers

To use the washer, pull the lever toward you and hold while spray is desired. If the lever is pulled while in the delay range, the wiper will start and continue to operate for two or three wipe cycles after the lever is released. Then, the intermittent interval previously selected will resume.

If the lever is pulled while in the off position, the wipers will operate for two or three wipe cycles. Then, the wipers will turn off.

WARNING!

Sudden loss of visibility through the windshield could lead to a collision. You might not see other vehicles or other obstacles. To avoid sudden icing of the windshield during freezing weather, warm the windshield with the defroster before and during windshield washer use.

Mist Feature

Push down on the wiper lever to activate a single wipe to clear off road mist or spray from a passing vehicle. As long as the lever is held down, the wipers will continue to operate.

NOTE: The mist feature does not activate the washer pump; therefore, no washer fluid will be sprayed on the windshield. The wash function must be used in order to spray the windshield with washer fluid.

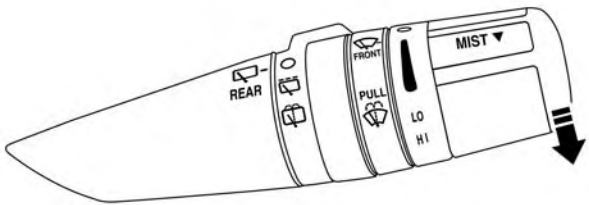

Mist Control

Rear Window Wiper/Washer — If Equipped

A rotary switch on the center portion of the control lever (located on the right side of the steering column) controls the operation of the rear wiper/washer function.

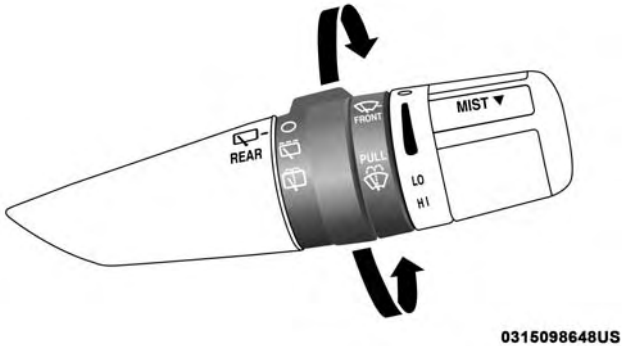

Rear Wiper/Washer Control

Rotate the switch upward to the first detent position for rear wiper operation.

Rotate the switch upward past the first detent to activate the rear washer. The washer pump and the wiper will continue to operate as long as the switch is held. Upon release, the wiper will cycle two to three times before returning to the set position.

If the rear wiper is operating when the ignition is turned to the LOCK position, the wiper will automatically return to the "park" position. When the vehicle is restarted, the wiper will resume function at whichever position the switch is set at.

CLIMATE CONTROLS

Manual Climate Control Overview

The air conditioning and heating system is designed to make you comfortable in all types of weather.

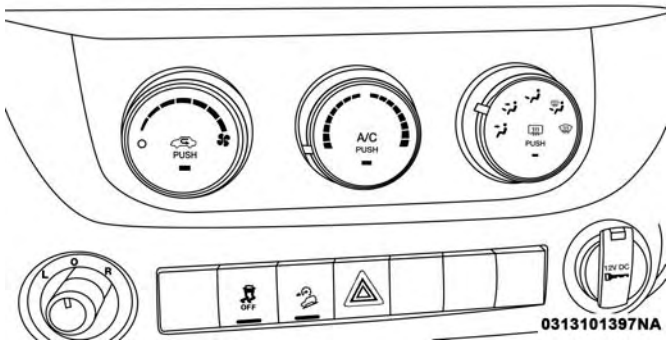

Manual Temperature Controls

Manual Climate Control Descriptions

Icon	Description
	A/C Button Push the A/C button to engage the Air Conditioning (A/C). An LED will illuminate when the A/C system is engaged.
	Recirculation Button Push and release this button to change the system between recirculation mode and outside air mode. Recirculation can be used when outside conditions such as smoke, odors, dust, or high humidity are present. **NOTE:** • Continuous use of the Recirculation mode may make the inside air stuffy and window fogging may occur. Extended use of this mode is not recommended. • The use of the Recirculation mode in cold or damp weather could cause windows to fog on the inside, because of moisture buildup inside the vehicle. Select the outside air position for maximum defogging. • Recirculation can be used in all modes except for Defrost. • The A/C can be deselected manually without disturbing the mode control selection.
FRONT	**Front Defrost Mode** Turn the Knob to the Front Defrost position. Air comes from the windshield and side window demist outlets. When the defrost mode is selected, the blower level will increase. Use Defrost mode with maximum temperature settings for best windshield and side window defrosting and defogging.

Icon	Description
REAR	**Rear Defrost Button** Push and release the Rear Defrost Control button to turn on the rear window defroster and the heated outside mirrors (if equipped). An indicator will illuminate when the rear window defroster is on. The rear window defroster automatically turns off after ten minutes.
	Temperature Control Use this control to regulate the temperature of the air inside the passenger compartment. Rotating the knob counterclockwise, from top center into the blue area of the scale, indicates cooler temperatures. Rotating the knob clockwise, into the red area, indicates warmer temperatures.
	Blower Control There are seven blower speeds. Use this control to regulate the amount of air forced through the system in any mode you select. The blower speed increases as you move the control clockwise from the off position. **NOTE:** Depending on the configuration, your vehicle may be equipped with four blower speeds.
	Modes Control Turn the knob to adjust airflow distribution. The airflow distribution mode can be adjusted so air comes from the instrument panel outlets, floor outlets, defrost outlets and demist outlets.
Panel Mode	**Panel Mode** Air comes from the outlets in the instrument panel. Each of these outlets can be individually adjusted to direct the flow of air. The air vanes of the center outlets and outboard outlets can be moved up and down or side to side to regulate airflow direction.

Icon	Description
Bi-Level Mode	**Bi-Level Mode** Air comes from the instrument panel outlets and floor outlets. A slight amount of air is directed through the defrost and side window demister outlets. **NOTE:** Bi-Level mode is designed under comfort conditions to provide cooler air out of the panel outlets and warmer air from the floor outlets.
Floor Mode	**Floor Mode** Air comes from the floor outlets. A slight amount of air is directed through the defrost and side window demister outlets.
Mix Mode	**Mix Mode** Air is directed through the floor, defrost, and side window demister outlets. This setting works best in cold or snowy conditions that require extra heat to the windshield. This setting is good for maintaining comfort while reducing moisture on the windshield.

CAUTION!

Failure to follow these cautions can cause damage to the heating elements:

- **Use care when washing the inside of the rear window. Do not use abrasive window cleaners on the interior surface of the window. Use a soft cloth and a mild washing solution, wiping parallel to the heating elements. Labels can be peeled off after soaking with warm water.**
- **Do not use scrapers, sharp instruments, or abrasive window cleaners on the interior surface of the window.**
- **Keep all objects a safe distance from the window.**

Automatic Climate Control Overview

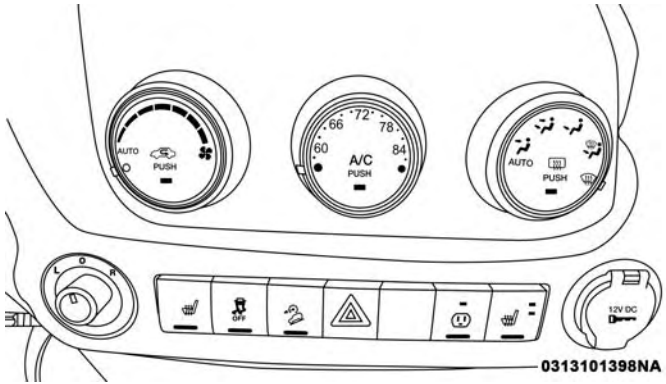

Automatic Temperature Controls

Automatic Climate Control Descriptions

Icon	Description
	A/C Button Push the A/C button to engage the Air Conditioning (A/C). An LED will illuminate when the A/C system is engaged.

Icon	Description
AUTO	**Automatic Operation** The Automatic Temperature Control system automatically maintains the climate in the cabin of the vehicle at the comfort levels desired by the driver and passenger. Operation of the system is quite simple. Turn the Mode Control knob (on the right) and the Blower Control knob (on the left) to AUTO. **NOTE:** The AUTO position performs best for front seat occupants only.
	Recirculation Button Push and release this button to change the system between recirculation mode and outside air mode. Recirculation can be used when outside conditions such as smoke, odors, dust, or high humidity are present. **NOTE:** • Continuous use of the Recirculation mode may make the inside air stuffy and window fogging may occur. Extended use of this mode is not recommended. • The use of the Recirculation mode in cold or damp weather could cause windows to fog on the inside, because of moisture buildup inside the vehicle. Select the outside air position for maximum defogging. • Recirculation can be used in all modes except for Defrost. • The A/C can be deselected manually without disturbing the mode control selection.
REAR	**Rear Defrost Button** Push and release the Rear Defrost Control button to turn on the rear window defroster and the heated outside mirrors (if equipped). An indicator will illuminate when the rear window defroster is on. The rear window defroster automatically turns off after ten minutes.

Icon	Description
	Temperature Control Use this control to regulate the temperature of the air inside the passenger compartment. Rotating the knob counterclockwise, from top center into the blue area of the scale, indicates cooler temperatures. Rotating the knob clockwise, into the red area, indicates warmer temperatures.
	Blower Control There are seven blower speeds. Use this control to regulate the amount of air forced through the system in any mode you select. The blower speed increases as you move the control clockwise from the off position. **NOTE:** Depending on the configuration, your vehicle may be equipped with four blower speeds.
	Modes Control Turn the knob to adjust airflow distribution. The airflow distribution mode can be adjusted so air comes from the instrument panel outlets, floor outlets, defrost outlets and demist outlets. The Mode settings are as follows:
Panel Mode 	**Panel Mode** Air comes from the outlets in the instrument panel. Each of these outlets can be individually adjusted to direct the flow of air. The air vanes of the center outlets and outboard outlets can be moved up and down or side to side to regulate airflow direction.

Icon	Description
Bi-Level Mode	**Bi-Level Mode** Air comes from the instrument panel outlets and floor outlets. A slight amount of air is directed through the defrost and side window demister outlets. **NOTE:** Bi-Level mode is designed under comfort conditions to provide cooler air out of the panel outlets and warmer air from the floor outlets.
Floor Mode	**Floor Mode** Air comes from the floor outlets. A slight amount of air is directed through the defrost and side window demister outlets.
Mix Mode	**Mix Mode** Air is directed through the floor, defrost, and side window demister outlets. This setting works best in cold or snowy conditions that require extra heat to the windshield. This setting is good for maintaining comfort while reducing moisture on the windshield.
Front Defrost Mode FRONT	**Front Defrost Mode** Turn the knob to the Front Defrost position. Air comes from the windshield and side window demist outlets. When the defrost mode is selected, the blower level will increase. Use Defrost mode with maximum temperature settings for best windshield and side window defrosting and defogging.

CAUTION!

Failure to follow these cautions can cause damage to the heating elements:

- **Use care when washing the inside of the rear window. Do not use abrasive window cleaners on the interior surface of the window. Use a soft cloth and a mild washing solution, wiping parallel to the heating elements. Labels can be peeled off after soaking with warm water.**
- **Do not use scrapers, sharp instruments, or abrasive window cleaners on the interior surface of the window.**
- **Keep all objects a safe distance from the window.**

Automatic Temperature Control (ATC) — If Equipped

Automatic Operation

1. Push the AUTO button on the faceplate on the Automatic Temperature Control (ATC) Panel.
2. Next, adjust the temperature you would like the system to maintain by adjusting the driver and passenger temperature control buttons. Once the desired temperature is displayed, the system will achieve and automatically maintain that comfort level.
3. When the system is set up for your comfort level, it is not necessary to change the settings. You will experience the greatest efficiency by simply allowing the system to function automatically.

NOTE:

- It is not necessary to move the temperature settings for cold or hot vehicles. The system automatically adjusts the temperature, mode, and blower speed to provide comfort as quickly as possible.

To provide you with maximum comfort in the Automatic mode during cold start-ups, the blower fan will remain on low until the engine warms up. The blower will increase in speed and transition into Auto mode.

Manual Operation Override

This system offers a full complement of manual override features. The AUTO symbol in the front ATC display will be turned off when the system is being used in the manual mode.

Operating Tips

NOTE: Refer to the chart at the end of this section for suggested control settings for various weather conditions.

Summer Operation

The engine cooling system must be protected with a high-quality antifreeze coolant to provide proper corrosion protection and to protect against engine overheating. OAT coolant (conforming to MS.90032) is recommended.

Winter Operation

To ensure the best possible heater and defroster performance, make sure the engine cooling system is functioning properly and the proper amount, type, and concentration of coolant is used. Use of the Air Recirculation mode during Winter months is not recommended, because it may cause window fogging.

Vacation/Storage

Before you store your vehicle, or keep it out of service (i.e., vacation) for two weeks or more, run the air conditioning system at idle for about five minutes, in fresh air with the blower setting on high. This will ensure adequate system lubrication to minimize the possibility of compressor damage when the system is started again.

Window Fogging

Vehicle windows tend to fog on the inside in mild, rainy, and/or humid weather. To clear the windows, select Defrost or Mix mode and increase the front blower speed. Do not use the Recirculation mode without A/C for long periods, as fogging may occur.

Outside Air Intake

Make sure the air intake, located directly in front of the windshield, is free of obstructions, such as leaves. Leaves collected in the air intake may reduce airflow, and if they enter the plenum, they could plug the water drains. In Winter months, make sure the air intake is clear of ice, slush, and snow.

Cabin Air Filter

The climate control system filters out dust and pollen from the air. Contact an authorized dealer to service your cabin air filter, and to have it replaced when needed.

Operating Tips Chart

WEATHER	CONTROL SETTINGS
Hot weather and vehicle interior is very hot	Set the mode control to , on, and blower on high. Roll down the windows for a minute to flush out the hot air. Once comfort is achieved adjust controls for comfort.
Warm weather	Turn on and set the mode control to the position.
Cool Sunny	Operate in position.
Cool & Humid conditions	Set the mode control to and turn on to keep windows clear.
Cold Weather	Set the mode control to the position. If windshield fogging starts to occur, move the control towards the position.

8000cb71

POWER WINDOWS — IF EQUIPPED

The power window switches are located on the instrument panel below the radio. Push the switch downward to open the window and upward to close the window.

The top left switch controls the left front window and the top right switch controls the right front window.

WARNING!

Never leave children unattended in a vehicle, and do not let children play with power windows. Do not leave the key fob in or near the vehicle, or in a location accessible to children. Occupants, particularly unattended children, can become entrapped by the windows while operating the power window switches. Such entrapment may result in serious injury or death.

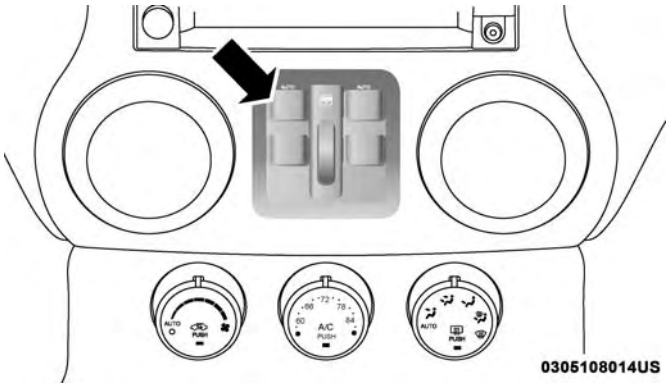

Power Window Switches

NOTE:

- For vehicles not equipped with the instrument cluster display, the power window switches will remain active for 45 seconds after the ignition switch is turned to the LOCK position. Opening either front door will cancel this feature.
- For vehicles equipped with the instrument cluster display, the power window switches will remain active for up to 10 minutes after the ignition switch is turned to the LOCK position. Opening either front door will cancel this feature.

Four-Door Models

The lower left switch controls the left rear passenger window, and the lower right switch controls the right rear passenger window.

Wind Buffeting

Wind buffeting can be described as the perception of pressure on the ears or a helicopter-type sound in the ears. Your vehicle may exhibit wind buffeting with the windows down in certain open or partially open positions. This is a normal occurrence and can be minimized by adjusting the window opening.

DUAL TOP — TWO-DOOR MODELS — IF EQUIPPED

Please visit http://www.jeep.com/en/wrangler-rooftop-instructions/ for instructional videos.

If your vehicle is equipped with a Dual Top, **you must remove one of the tops from the vehicle. If the soft top is removed, the pivot brackets must also be removed from the sport bar.** The soft top was installed at the factory for shipping purposes only. **The soft top and the hard top are to be used independently.** Removal is mandatory to prevent any possible wear and tear on the soft top. Your vehicle warranty will not cover damage resulting from both tops remaining on the vehicle at the same time for extended periods of time.

Removing The Soft Top — Two-Door Models

1. Locate and remove the two boxes that contain the following items:
   - Right and left door frames
   - Four door frame attachment knobs
   - Right and left quarter windows
   - Rear window
   - Two rear window roll up straps
   - Two Sunrider secure straps (if equipped)
   - Two rear swing gate brackets
2. Remove the hard top. Refer to "Freedom Top Three-Piece Modular Hard Top — Front/Rear Panel Removal" in this section.
3. Remove the soft top bow assembly pivot bracket screws (two per side) using a #T30 Torx head driver.

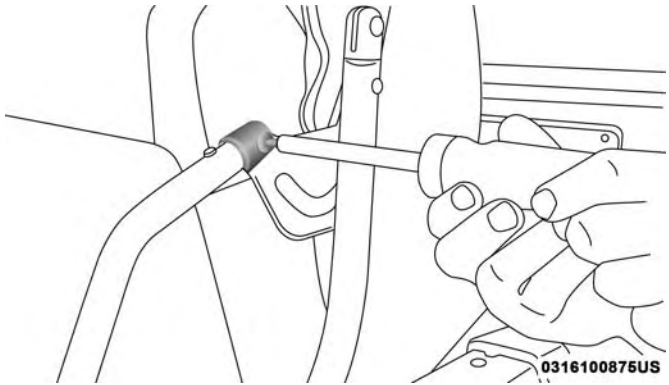

Step Three

4. Disconnect the knuckles from the left and right metal pivot brackets. Remove the soft top from the vehicle and store in a clean, dry location.

NOTE: To aid in disconnecting the knuckles, you may carefully tap on the knuckles using a rubber mallet.

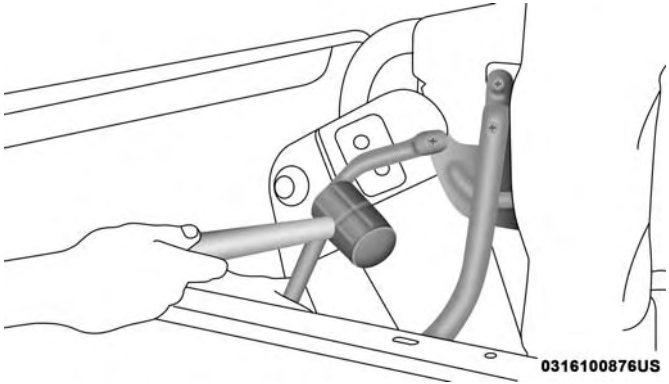

Step Four

5. Unzip the zipper on the sport bar cover to expose the pivot brackets. Remove the brackets using a #T30 Torx head driver. Recover and re-zip the sports bar cover. Store the pivot brackets and screws in a safe place.

6. Reinstall the hard top. Refer to "Freedom Top Three-Piece Modular Hard Top — Front/Rear Panel Installation" in this section.

Installing The Soft Top — Two-Door Models

NOTE: The following procedures are for first time set up only. For future soft top procedures, refer to "Soft Top" in this section.

1. Locate and remove the following items prior to hard top removal:
   - Right and left door frames
   - Door frame attachment knobs (four for two-door models, six for four-door models)
   - Right and left quarter windows
   - Rear window

2. Remove the hard top. Refer to "Freedom Top Three-Piece Modular Hard Top — Front/Rear Panel Removal" in this section.

3. Install the door frames. Refer to "Door Frame" in this section.

4. If the soft top has been removed, follow these steps to reinstall the soft top. If the soft top is on the vehicle, proceed to step #5.

   a. If the pivot brackets have been removed, unzip the sport bar covers and attach the pivot brackets to the sports bar with the four screws that were removed using a #T30 Torx head driver. Re-cover and re-zip the sport bar covers.

b. Lay the soft top into the rear of the vehicle with the bows pointing forward and the curved portion of the bows facing upward.

c. Reattach the knuckles onto the metal pivot brackets.

NOTE: To aid in reattaching the knuckles, you may carefully tap on the knuckles using a rubber mallet.

d. Screw the pivot screws back into place using a #T30 Torx head driver. Secure them until they are snug, being careful not to cross-thread the screws or overtighten.

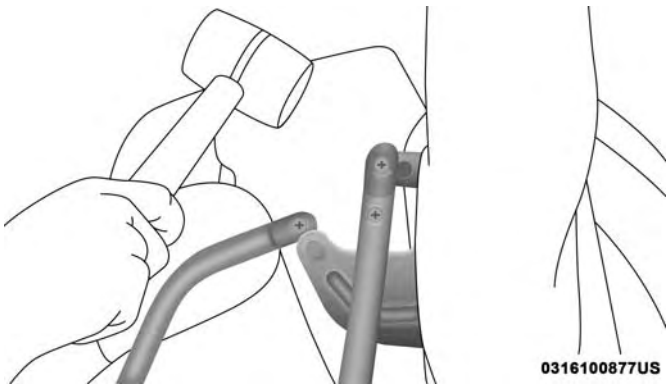

Step Four

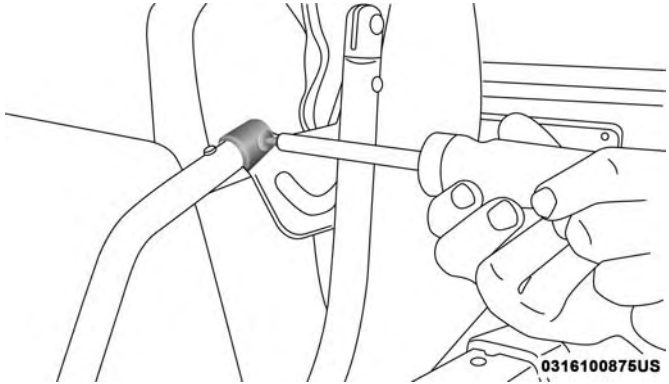

Step Four

CAUTION!
Do not overtighten the screws. You can strip the screws if they are overtightened.

5. Remove the swing gate bar (black metal bar for bottom of rear window) and set aside.

NOTE: Be sure the wire harness in the left rear corner is not tangled in the soft top bows before you lift the top.

6. Unsnap and remove the black boot cover. This cover should be discarded. It was intended as a protective cover for shipping only.

NOTE: A visual instruction sheet is enclosed in the dual top wrap.

7. Put up the soft top. Refer to "Soft Top — Putting Up The Soft Top" in this section.

DUAL TOP — FOUR-DOOR MODELS — IF EQUIPPED

Please visit http://www.jeep.com/en/wrangler-rooftop-instructions/ for instructional videos.

If your vehicle is equipped with a Dual Top, **you must remove one of the tops from the vehicle. If the soft top is removed, the pivot brackets must also be removed from the sport bar.** The soft top was installed at the factory for shipping purposes only. **The soft top and the hard top are to be used independently.** Removal is mandatory to prevent any possible wear and tear on the soft top. Your vehicle warranty will not cover damage resulting from both tops remaining on the vehicle at the same time for extended periods of time.

Removing The Soft Top — Four-Door Models

1. Locate and remove the two boxes that contain the following items:
   - Right and left door frames
   - Six door frame attachment knobs
   - Right and left quarter windows
   - Rear window
   - Two rear window roll up straps
   - Two Sunrider secure straps (if equipped)
   - Two rear swing gate brackets
2. Remove the hard top. Refer to "Freedom Top Three-Piece Modular Hard Top — Front/Rear Panel Removal" in this section.
3. Ensure the tether strap is secure to the pivot bracket. Unbutton the side bow tether strap (both sides).

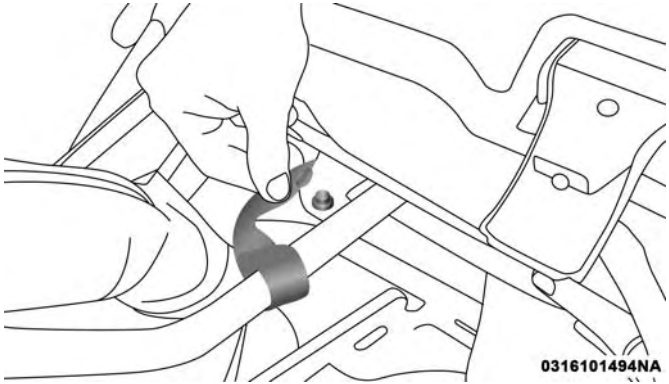

Step Three

4. Using the plastic reinforcement as a handle, slide the tether strap up the side bow (both sides).

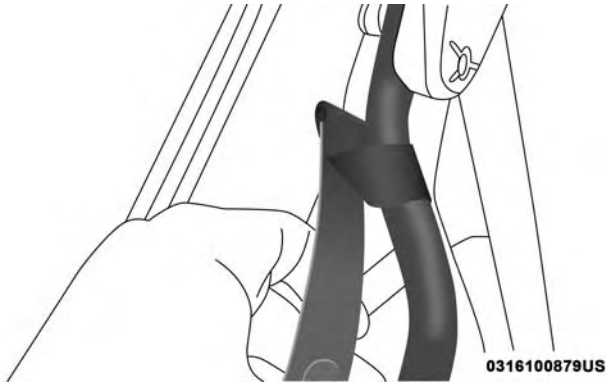

Step Four

5. The tether strap **must** be hooked onto the pivot bracket prior to removal of soft top from vehicle (both sides).

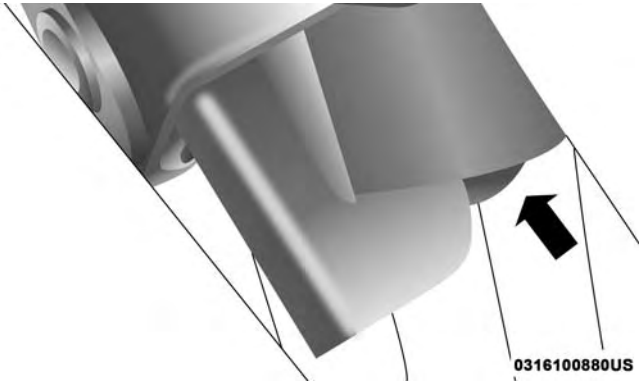

Step Five

6. Remove the soft top bow assembly pivot bracket bolts (two per side) from the sport bar using a 10.0 mm wrench or socket driver.

7. Lift the soft top in a upward motion to release the pivot bracket from the sport bar bracket.

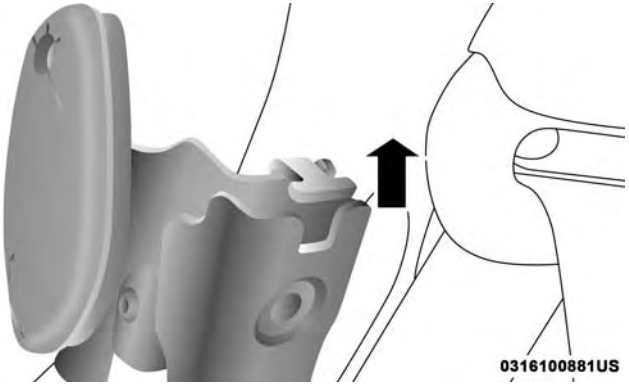

Step Seven

8. Remove the soft top from the vehicle and store in a clean, dry location (another person may be needed to help with this operation).

NOTE: If you are doing this alone, use one arm to hold the bundle up, the other to remove the brackets.

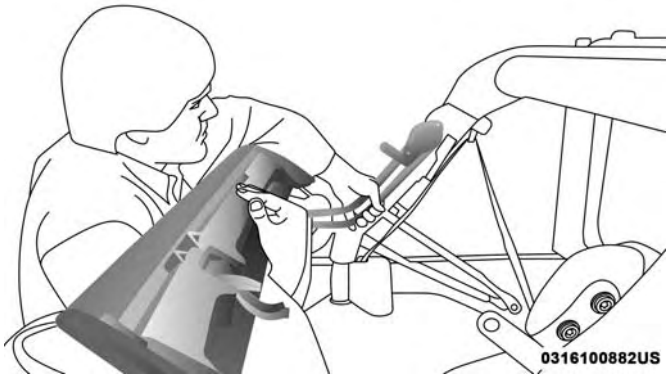

Step Eight

9. Reinstall the hard top. Refer to "Freedom Top Three-Piece Modular Hard Top — Front/Rear Panel Installation" in this section.

Installing The Soft Top — Four-Door Models

NOTE: The following procedures are for first time set up only. For future soft top procedures, refer to "Soft Top" in this section.

1. Locate and remove the following items prior to hard top removal:
   - Right and left door frames
   - Six door frame attachment knobs
   - Right and left quarter windows
   - Rear window
2. Remove the hard top. Refer to "Freedom Top Three-Piece Modular Hard Top — Front/Rear Panel Removal" in this section.
3. Install the door frames. Refer to "Door Frame" in this section.
4. Install the soft top with the pivot brackets above the sport bar brackets, lower the soft top into the sport bar bracket slots in a downward motion to lock tab on soft top. You will need to lift the top to get the brackets to line up. (Another person may be needed to help with this operation.)

NOTE: If you are doing this alone, use one arm to hold the soft top up, the other to align the brackets.

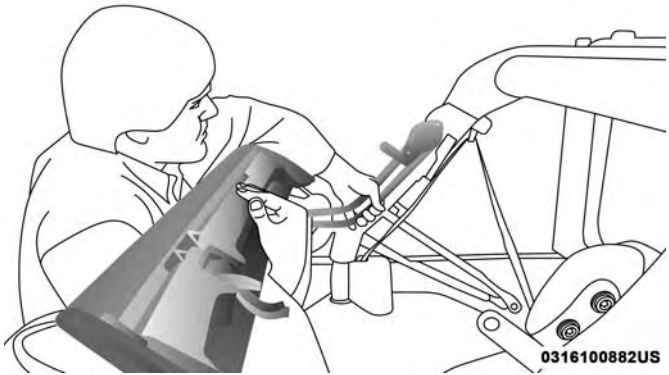

Step Four

5. Lower the pivot bracket onto the sport bar bracket mounting tab in a downward motion to lock into tab.

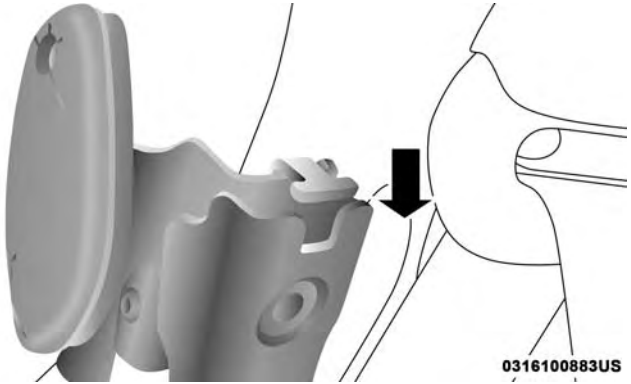

Step Five

6. Install the pivot bracket bolts back into place using a 10.0 mm wrench or socket driver. Secure them until they are snug, being careful not to cross-thread the screws or overtighten.

CAUTION!
Do not overtighten the screws. You can strip the screws if they are overtightened.

7. Remove the tether strap from the pivot bracket.

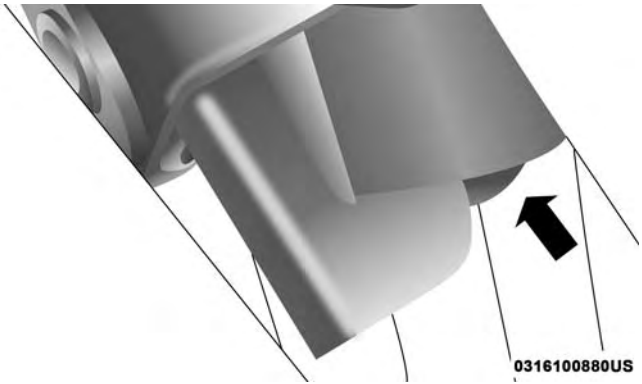

Step Seven

8. Using the plastic reinforcement as a handle remove the tether strap from the bracket hook by sliding strap up off hook and slide down the side bow (both sides).

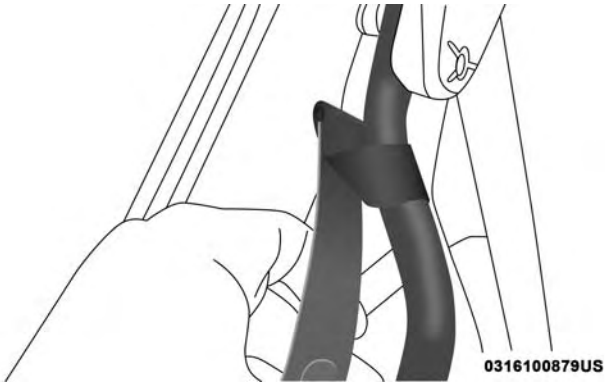

Step Eight

9. Button the side bow tether strap (both sides).

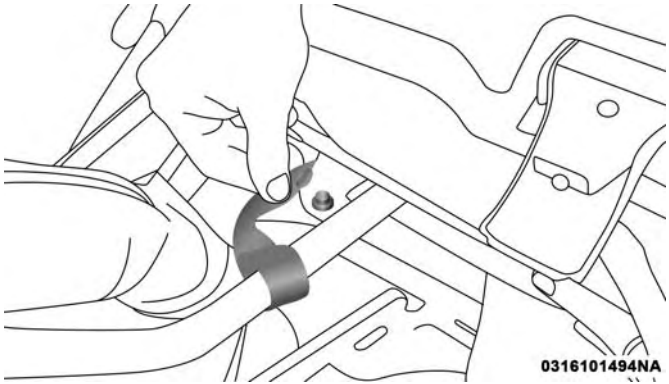

Step Nine

10. Remove the swing gate bar (black metal bar for bottom of rear window) and set aside.

NOTE: Be sure the wire harness in the left rear corner is not tangled in the soft top bows before you lift the top.

11. Unsnap and remove the black boot cover. This cover should be discarded. It was intended as a protective cover for shipping only.

NOTE: A visual instruction sheet is enclosed in the dual top wrap.

12. Put up the soft top. Refer to "Soft Top — Putting Up The Soft Top" in this section.

FREEDOM TOP THREE-PIECE MODULAR HARD TOP — IF EQUIPPED

CAUTION!

- **The hard top is not designed to carry any additional loads such as roof racks, spare tires, building, hunting, or camping supplies, and/or luggage, etc. Also, it was not designed as a structural member of the vehicle, and thus cannot properly carry any additional loads other than environmental (rain, snow, etc.).**
- **Do not move your vehicle until the top has been either fully attached to the front header, sport bar, and body side or fully removed.**

Failure to follow these cautions may cause interior water damage, stains or mildew:

- **It is recommended that the top be free of water prior to panel removal. Removing the top, opening a door or lowering a window while the top is wet may allow water to drip into the vehicle's interior.**

(Continued)

CAUTION! *(Continued)*

- **The hard top assembly must be positioned properly to ensure sealing. Improper installation can cause water to leak into the vehicle's interior.**
- **Careless handling and storage of the removable roof panels may damage the seals, causing water to leak into the vehicle's interior.**
- **The front panel(s) must be positioned properly to ensure sealing. Improper installation can cause water to leak into the vehicle's interior.**

Front Panel(s) Removal

NOTE: Left panel must be removed before removing right panel.

1. Fold down the sun visor, and move it to the side.
2. Turn the rear fasteners (located on the overhead speaker bar assembly) counterclockwise until they can be removed.

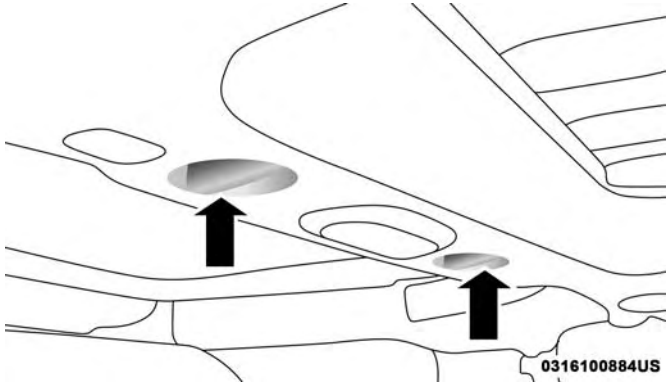

Step Two

3. Turn the center L-shaped locks (two) from the center of the roof panel.

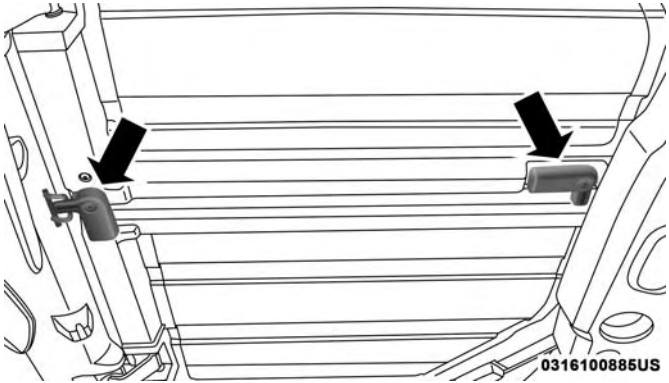

Step Three

4. Turn the rear L-shaped lock (located above the shoulder belt anchorage).

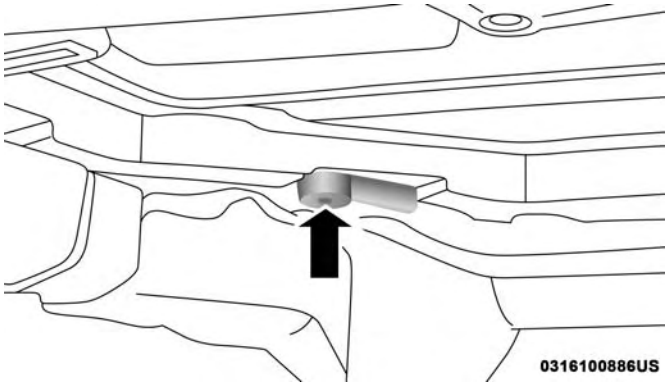

Step Four

5. Unlatch the header panel latch located at the top of the windshield.

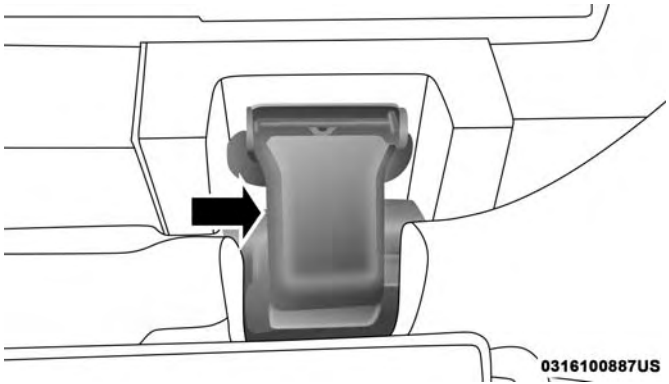

Step Five

6. Remove the left-hand panel.

To remove the right panel, follow the steps above except for Step 3.

Freedom Top Storage Bag

Vehicles equipped with a Freedom Top Modular Hard Top, come with a Freedom Top storage bag that allows you to store your Freedom Top panels. The storage bag contains two compartments and fits behind the rear seat.

Lay the Freedom bag down so the loops and hooks are facing downward. Unzip the bag and fold back the outer flap. Release the Velcro on the black panel divider and fold it back.

NOTE: Ensure the front Freedom Top panel latch is closed prior to inserting the panel into the Freedom bag.

1. Insert the right side Freedom panel into the bag with the latches facing downward.

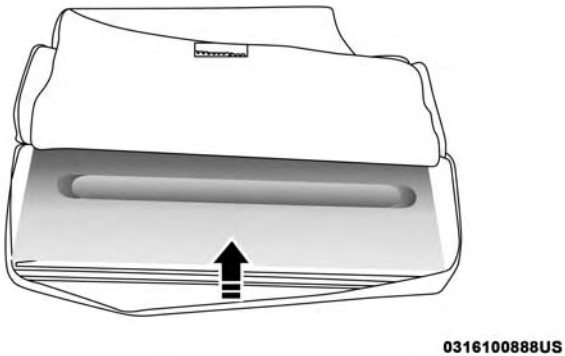

Step One

2. Unfold the black panel divider (ensure the divider is laying flat). Secure the Velcro, located at the center of the divider.

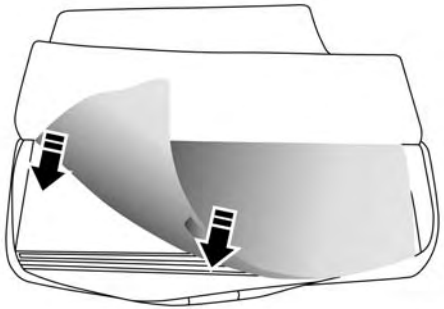

0316100889US

Step Two

3. Insert the left-side Freedom panel into the bag with the latches facing upward.

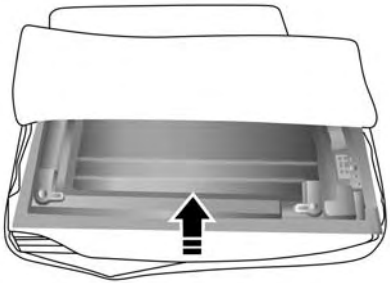

0316100890US

Step Three

NOTE: Ensure the front Freedom panel latch is closed prior to inserting the panel into the bag.

4. Unfold the outer flap and zip the Freedom bag closed.

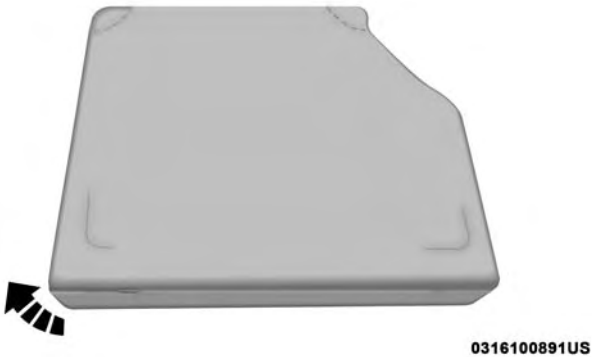

Step Four

5. Install the seat attachment strap (at the top of the bag) through the loops.

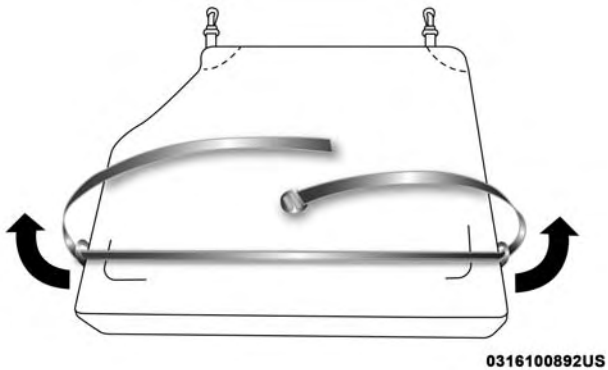

Step Five

6. Lift the Freedom bag into the vehicle with the hooks and straps facing the back of the rear seat. Attach the clips at the bottom of the bag to the child restraint anchorages, located at the base of the rear seat.

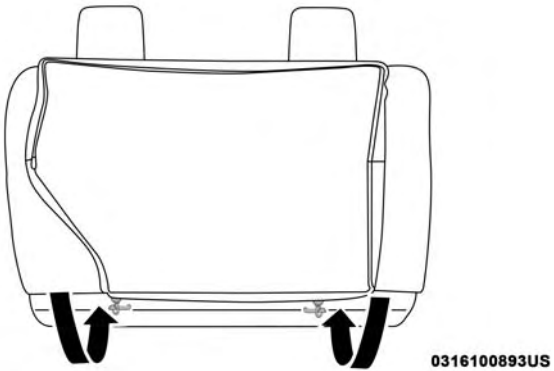

Step Six

7. Wrap the upper strap around the rear head restraints and loop the strap through the buckle. Pull on the strap to tighten the Freedom bag securely against the rear seat.

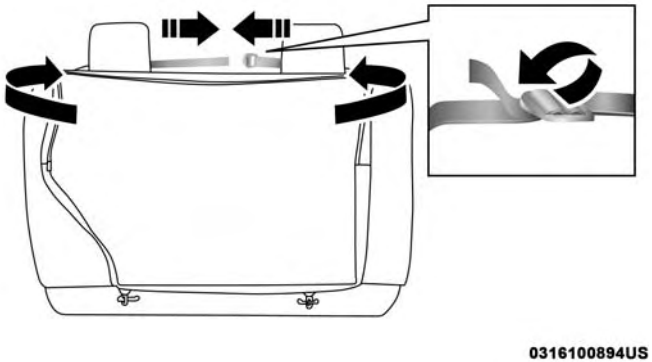

Step Seven

Front Panel(s) Installation

NOTE: Set the panels on the windshield frame so that there is no overhang. Also, make sure that the panels are sitting flush with the body.

1. Install the right panel first, then the left panel.
2. Reinstall the panel(s) using the same steps for removal in reverse order.

Front Panel(s) Installation With Rear Hard Top Removed

1. Turn the left and right panels over and move the spacer block (located on the rear of the panel) upward 90 degrees.

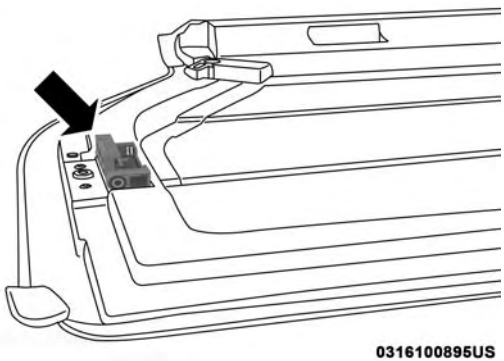

Step One

NOTE: The front panel(s) must be positioned properly to ensure sealing. Set the panels on the windshield frame so that there is no overhang. Also, make sure that the panels are sitting flush with the body.

2. Install the right panel first, then the left panel.
3. Reinstall the panel(s) using the same steps for removal in reverse order.

Rear Hard Top Removal

1. Remove both front panels. Refer to “Front Panel(s) Removal” in this section.
2. Open both doors.
3. Remove the two Torx head screws that secure the hard top at the B-pillar (near the top of the door) using a #40 Torx head driver (Four–Door Only).
4. Remove the six Torx head screws that secure the hard top to the vehicle (along the interior bodyside) using a #40 Torx head driver.

5. Open the swing gate all the way to ensure clearance of the rear window glass. Lift the rear window glass.

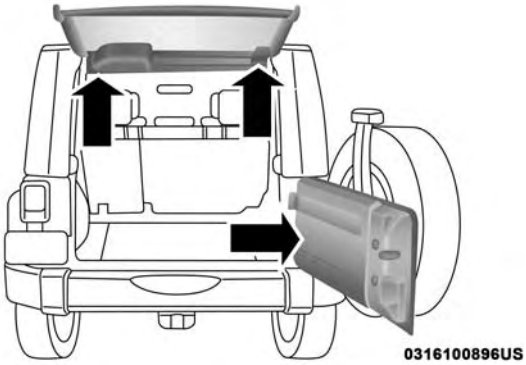

Step Five

6. Locate the wire harness on the left rear inside corner of the vehicle.

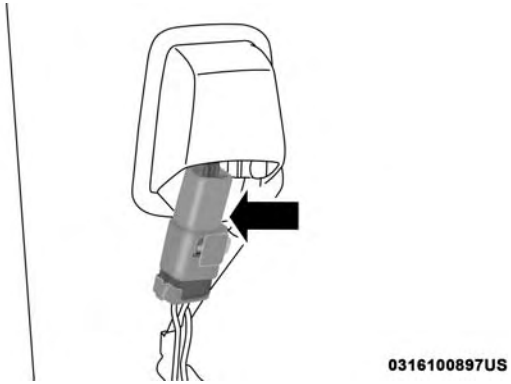

Wire Harness Connector

7. Release the red locking tab by pulling outward to the right.

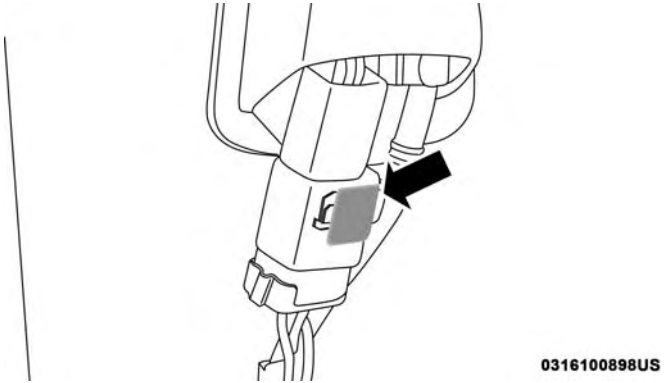

Red Locking Tab

8. To remove the wiring harness push the tab and pull downward to disconnect.

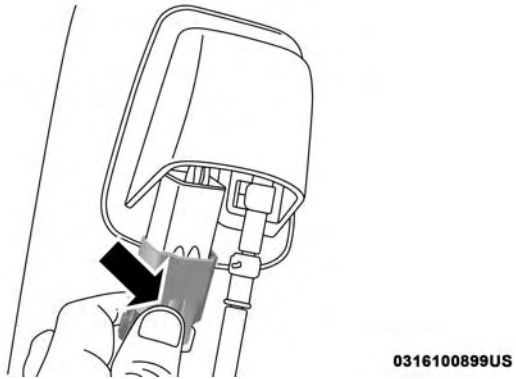

Push Tab To Disconnect

9. To remove the washer hose, pinch the grips on hose connector and pull downward.

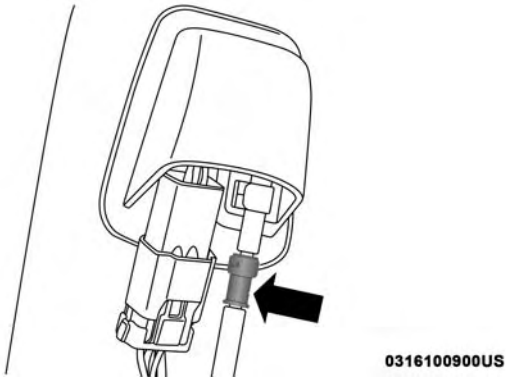

Pinch Grip On Hose

10. Close the swing gate.
11. Remove the hard top from the vehicle. Place the hard top on a soft surface to prevent damage.

CAUTION!
The removal of the Freedom Top requires four adults located on each corner. Failure to follow this caution could damage the Freedom Top.

Rear Hard Top Installation

NOTE: If the door frames are installed from soft top usage, they must be removed prior to installation of the hard top.

1. Inspect the hard top seals for damage and replace if necessary.
2. Install the hard top using the same steps for removal in reverse order.

Make sure that the hard top is sitting flush with the body at the sides and check to ensure that there is a uniform gap between the lift glass and hard top.

NOTE:

- The Torx fasteners that attach the hard top to the body should be torqued to 88 in lb +/- 22 in lb (10 N·m +/- 2.5 N·m).
- It is not necessary to pinch connection when reinstalling washer hose. Push on until click is heard.

DOOR FRAME

WARNING!

- **Do not drive your vehicle on public roads with the door frame(s) removed as you will lose the protection that they can provide. This procedure is furnished for use during off-road operation only.**
- **Do not drive your vehicle on public roads with the doors removed as you will lose the protection that they can provide. This procedure is furnished for use during off-road operation only.**

CAUTION!

Failure to follow these cautions may cause interior water damage, stains or mildew:

- **Opening a door or lowering a window while the top is wet may allow water to drip into the vehicle's interior.**
- **Careless handling and storage of the removable door frame(s) may damage the seals, causing water to leak into the vehicle's interior.**
- **The door frame(s) must be positioned properly to ensure sealing. Improper installation can cause water to leak into the vehicle's interior.**

Door Frame Removal

1. Unscrew and remove the door frame attachment knobs (two per door).

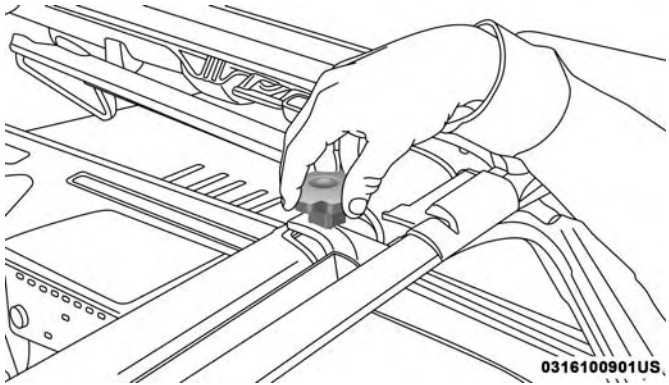

Step One

WARNING!

Use both hands to remove the door frames. The door frames will fold and could cause injury if both hands are not used.

2. Place one hand on the upper rear and one hand on the front of the door frame.
3. Pull the frame toward you with your rearward hand to remove the frame from the vehicle.

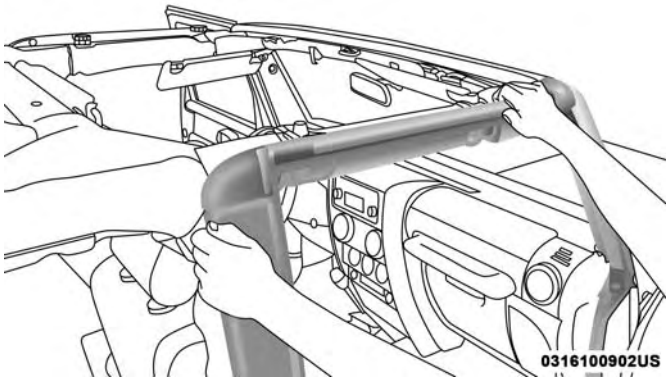

Step Three

4. Screw the knobs back into the door frame and fold for storage. Store in a secure location.

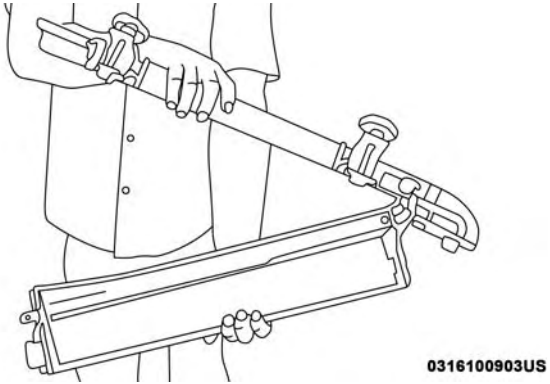

Step Four

WARNING!

- **Do not drive your vehicle on public roads with the door frame(s) removed as you will lose the protection that they can provide. This procedure is furnished for use during off-road operation only.**
- **Do not drive your vehicle on public roads with the doors removed as you will lose the protection that they can provide. This procedure is furnished for use during off-road operation only.**

Door Frame Installation — Two-Door Models — If Equipped

1. Unfold door frame and unscrew thumbscrews.
2. Set the door frame pin into the hole on top of the body side, behind the door opening.

Step Two

3. After the door frame pin has been set into the body side hole, carefully set the front of the door frame into the rubber seal at the top of the windshield.
4. Starting with the front of the door frame, clip it over the metal side bar and then clip the rear, making sure that the material for the side bar covers is not pinched by the door frame.

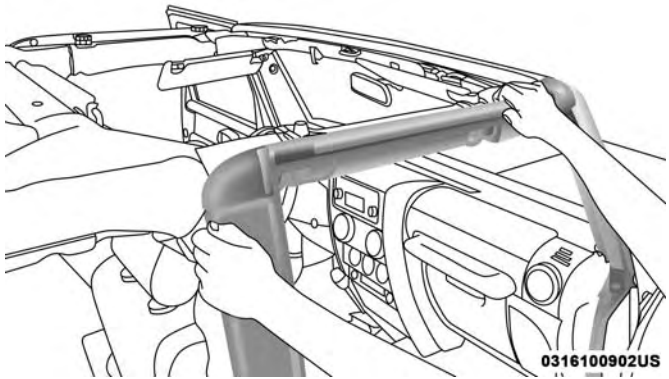

Step Four

5. Starting with the front knob, screw in and tighten both knobs. Repeat on the other side.

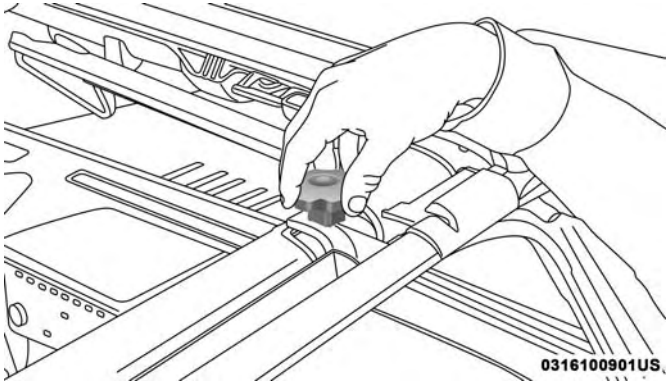

Step Five

Door Frame Installation — Four-Door Models — If Equipped

1. Install the rear door frame first.
2. Set the door frame pin into the hole on top of the body side, just behind the rear door opening.

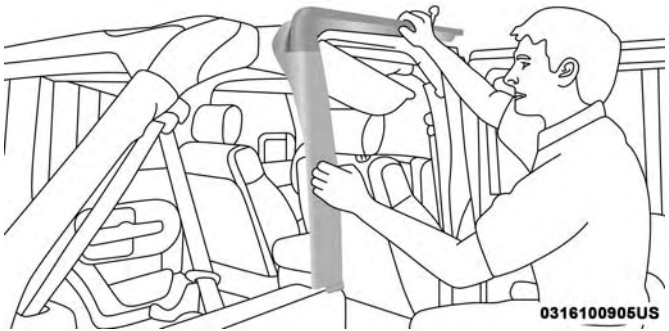

Step Two

3. Position the top of the door frame against the metal sport bar and push onto the side bar, making sure not to pinch the material of the sports bar covers and to ensure it is properly positioned on the seal above the front of the rear door.

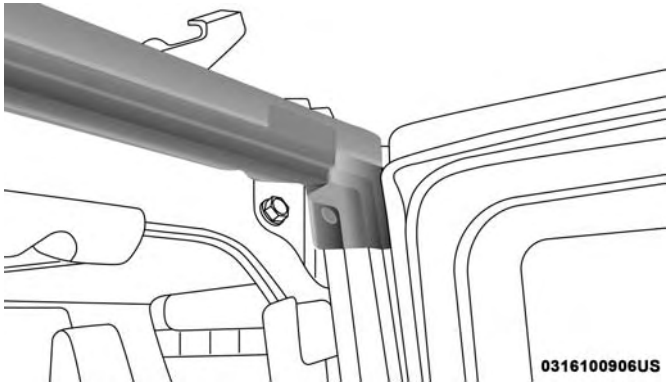

Step Three

4. Loosely install the rear knob (long knob) to hold the door rail in position.
5. Carefully set the front of the front door frame in the rubber seal at the top of the windshield.

Step Five

6. Clip the front of the door rail over the side bar making sure that the material for the side bar cover is not pinched by the door frame.

7. Position the rear of the front door frame to lay on top of the front of the rear door frame. Ensure the seals are installed correctly to avoid water leaks.

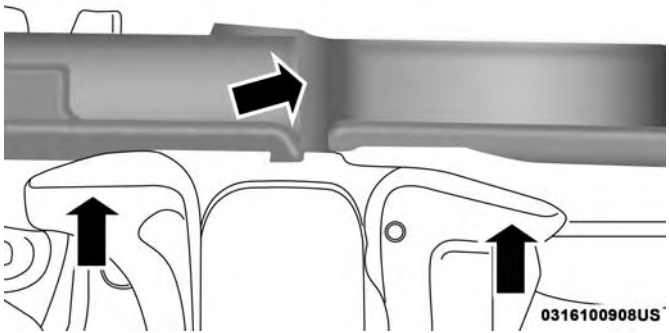

Step Seven

8. Loosely install both knobs beginning with the front knob (long knob). Then, install the middle knob (short knob) through the front and rear door frames and screw into the top of the B-pillar.

9. Tighten the front knob, then the rear most knob, and then the middle knob. Repeat this procedure for the other side.

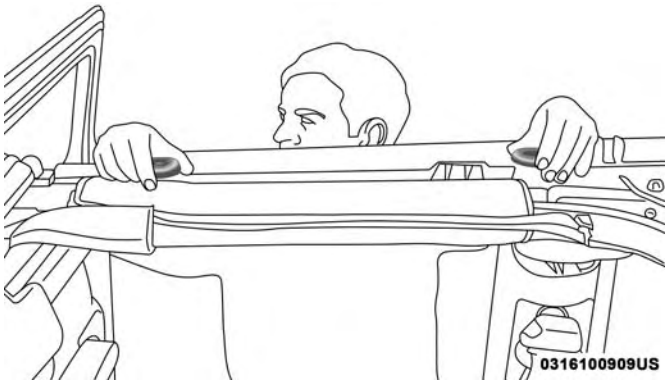

Step Nine

SOFT TOP — TWO-DOOR MODELS

Please visit http://www.jeep.com/en/wrangler-rooftop-instructions/ for instructional videos.

WARNING!

- **Do not drive the vehicle with the rear window curtain up unless the side curtains are also removed. Dangerous exhaust gases could enter the vehicle causing harm to the driver and passengers.**
- **The fabric upper doors and fabric top are designed only for protection against the elements. Do not rely on them to contain occupants within the vehicle or to protect against injury during an accident. Remember, always wear seat belts.**
- **Make sure hands and fingers are clear of all pinch points when installing and removing the soft tops. The zippers and side bows may cause serious injury if fingers or hands get caught in between.**

CAUTION!

The soft top is not designed to carry any additional loads such as roof racks, spare tires, building, hunting, or camping supplies, and/or luggage, etc. Also, it was not designed as a structural member of the vehicle and, thus, cannot properly carry any additional loads other than environmental (rain, snow, etc.).

If the temperature is below 72°F (24°C) and/or the top has been folded down for a period of time, the top will appear to have shrunk when you raise it, making it difficult to put up. This is caused by a natural contraction of the vinyl coating on the fabric top.

Place the vehicle in a warm area. Pull steadily on the top fabric. The vinyl will stretch back to its original size and the top can then be installed. **If the temperature is 41°F (5°C) or below, do not attempt to put the top down or roll the rear or side curtains.**

CAUTION!

- **Do not run a fabric top through an automatic car wash. Window scratches and wax build up may result.**
- **Do not lower the top when the temperature is below 41°F (5°C). Damage to the top may result.**
- **Do not move your vehicle until the top has been either fully attached to the windshield frame, or fully lowered.**
- **Do not lower the top with the windows installed. Window and top damage may occur.**
- **Refer to "Appearance Care For Fabric Top Models" in "Bodywork" in "Servicing And Maintenance" for further information. It contains important information on cleaning and caring for your vehicle's fabric top.**
- **Do not use any tools (screwdrivers, etc.) to pry or force any of the clamps, clips, or retainers securing**

(Continued)

CAUTION! ***(Continued)***

the soft top. Do not force or pry the soft top framework when opening or closing. Damage to the top may result.

Failure to follow these cautions may cause interior water damage, stains or mildew on the top material:

- **It is recommended that the top be free of water prior to opening it. Operating the top, opening a door or lowering a window while the top is wet may allow water to drip into the vehicle's interior.**
- **Careless handling and storage of the soft top may damage the seals, causing water to leak into the vehicle's interior.**
- **The soft top must be positioned properly to ensure sealing. Improper installation can cause water to leak into the vehicle's interior.**

Quick Steps To Lowering The Soft Top

Refer to "Lowering The Soft Top" in this section for further information.

1. Remove the side windows.

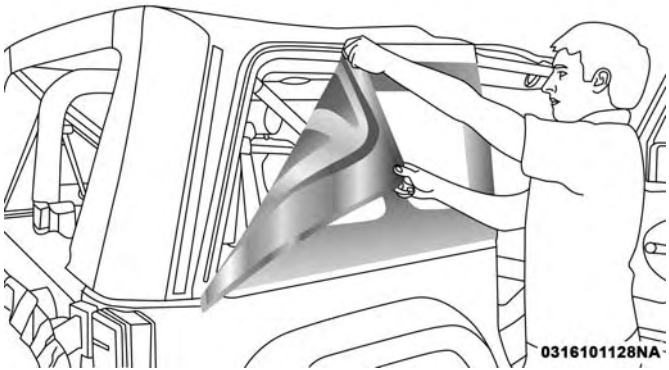

Step One

2. Remove the back window.

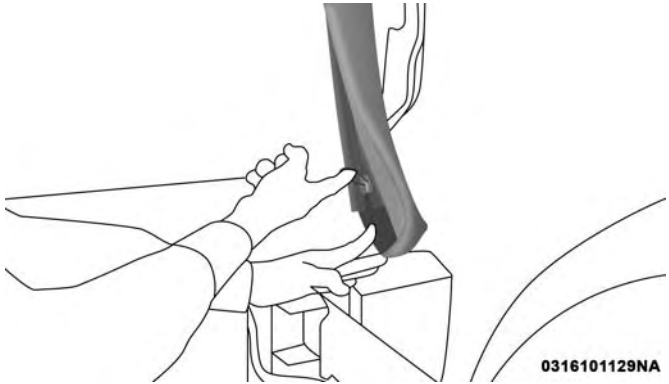

Step Two

3. Release header latches from the windshield frame.

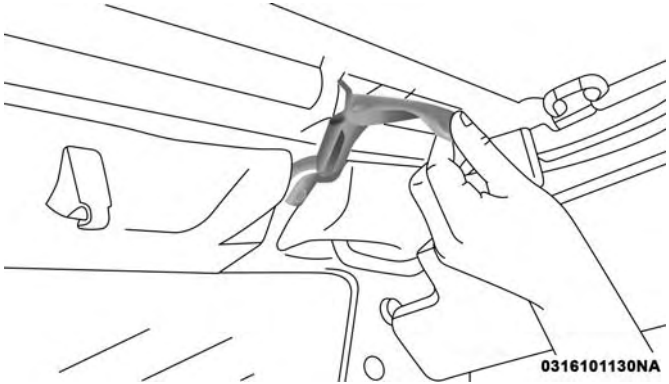

Step Three

4. Release the sail panel retainers from the body side channel at the rear corners of the vehicle.

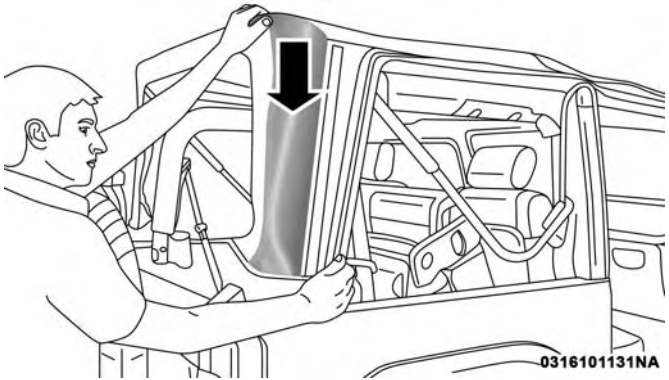

Step Four

NOTE: When releasing the sail panel retainers, it is helpful to pull down on the rear roof bow.

5. Make sure the plastic sleeves are slid rearward over the Sunrider link to lock in the link (Sunrider Models only).

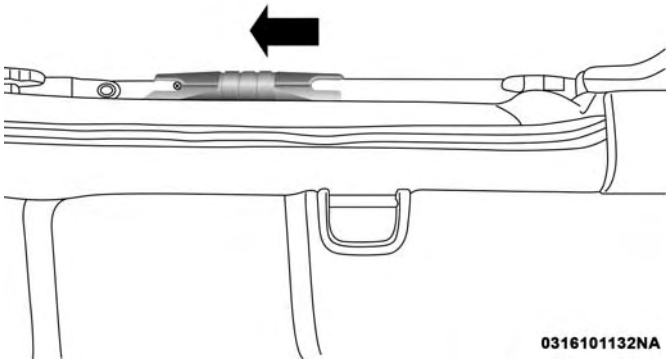

Step Five

6. As you begin to lower the top, fold the sail panels so that they rest on top of the soft top.

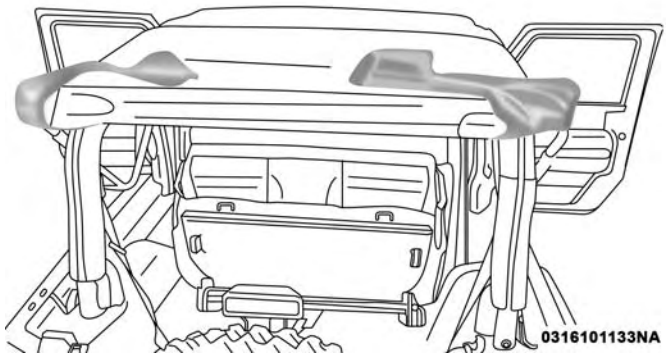

Step Six

7. Release the Sunrider latch (both sides).

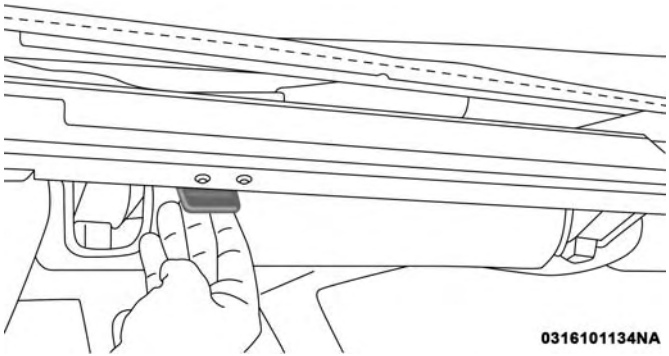

Step Seven

8. Open the swing gate and lower the top.

NOTE: Ensure fabric does not overhang the sides of the vehicle.

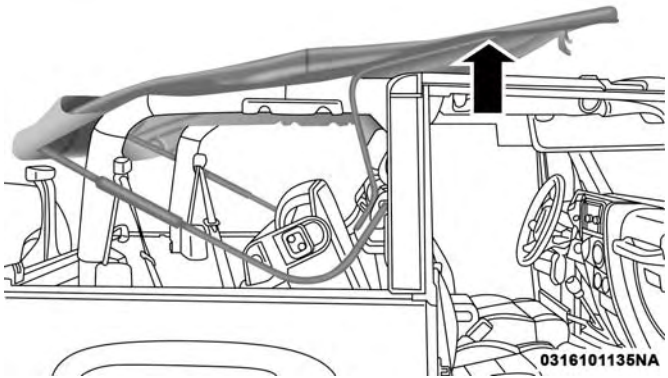

Step Eight

Quick Steps To Raising The Soft Top

Refer to "Raising The Soft Top" in this section for further information.

1. Open the swing gate and raise the top, engaging the Sunrider latches (another person may be needed to help with this operation).

Step One

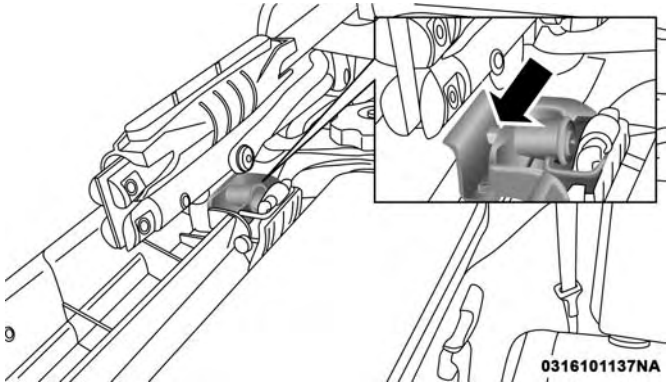

Step One

2. Engage header latches.

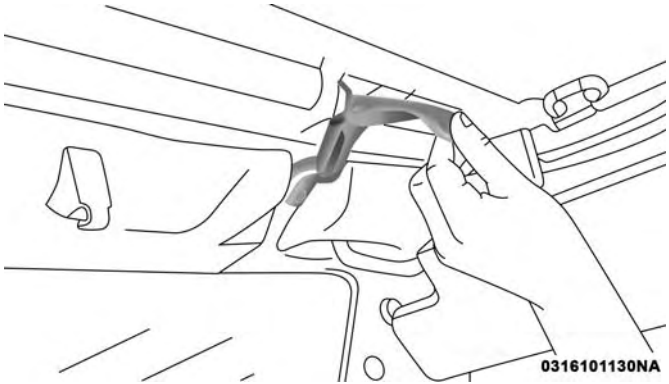

Step Two

3. Install rear corner panels.

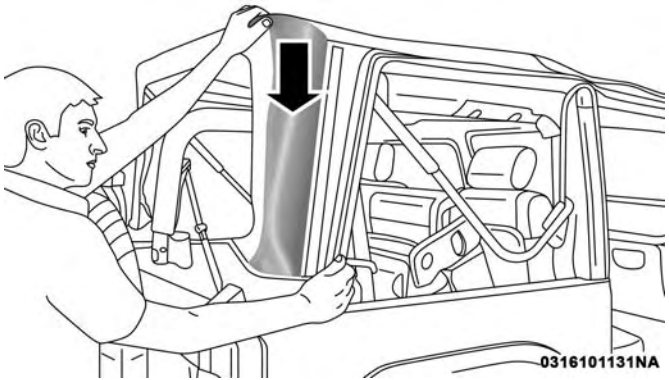

Step Three

4. Install the back window.

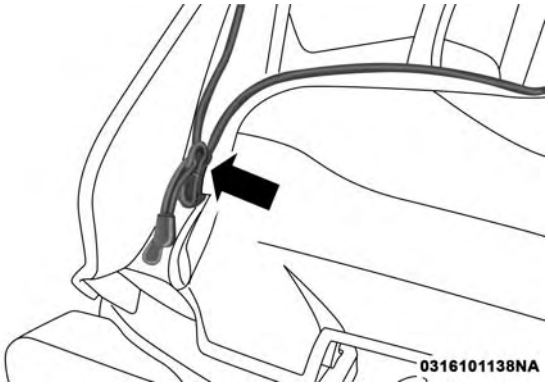

Step Four

5. Install the side windows.

6. To install the side windows, affix the window temporarily by attaching to the Velcro in the rear corner. Start the zipper but close only about 1 inch (2.5 cm).

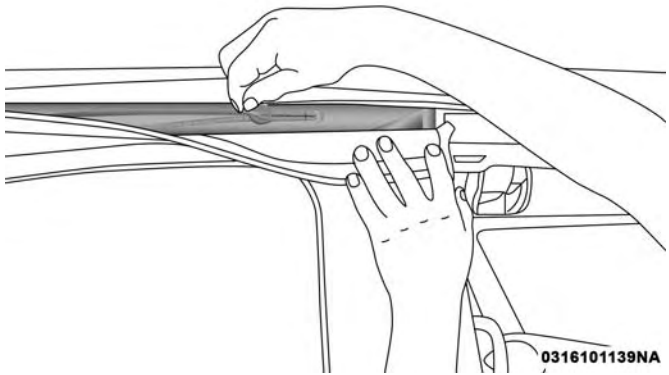

Step Six

7. Insert the front retainer of the window into the door channel, making sure the retainer is fully seated and properly positioned on the door frame. Failure to do so can result in wind and water leaks or damage to the window.

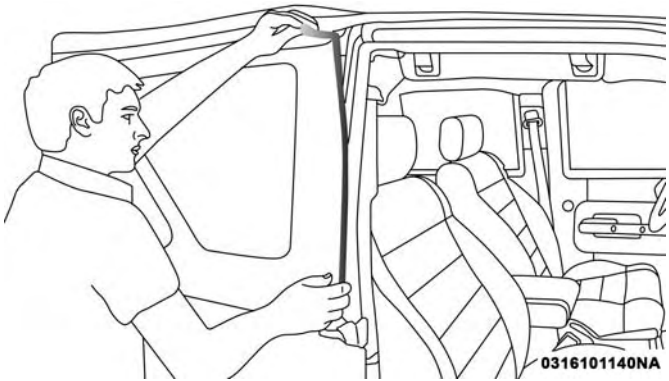

Step Seven

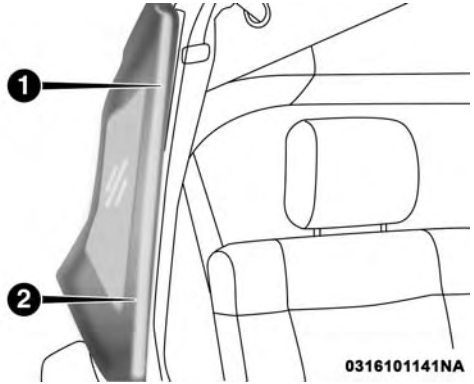

Retainer Insertion

1 — Incorrect Insertion
2 — Correct Insertion

8. Insert the retainer along the bottom edge of the window into the bottom side channel, beginning at the front and working to the rear of the vehicle. Finish by closing the zipper completely and attaching the Velcro along the top and rear of the window. Repeat this step for the opposite side.

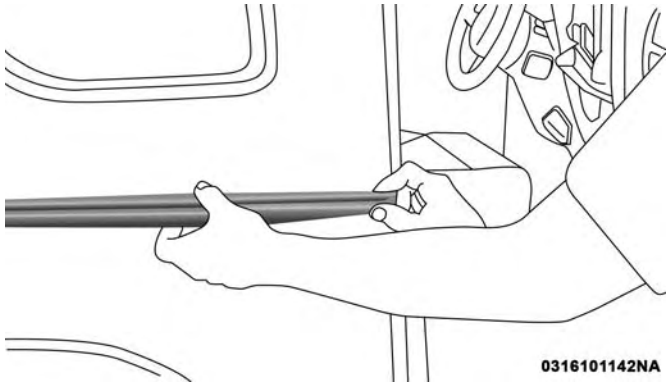

Step Eight

Lowering The Soft Top

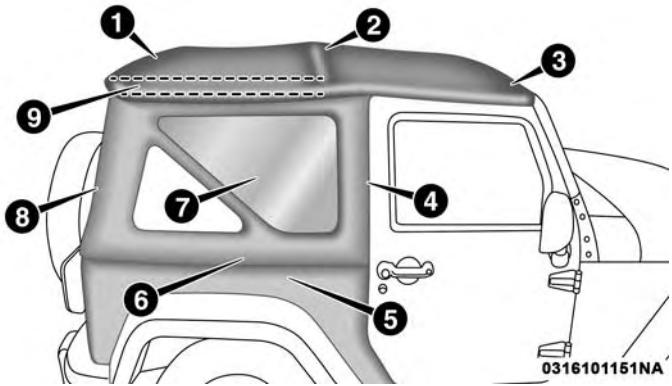

Side View Top And Components

1 — 3–Bow
2 — 2–Bow
3 — Header Bow
4 — Front Retainer — Quarter Window
5 — Body Side Retainer
6 — Bottom Retainer — Quarter Window
7 — Quarter Window
8 — Sail Panel
9 — Check Strap

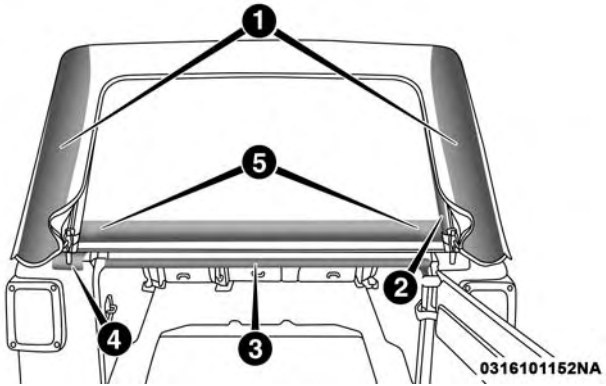

Rear View Top And Components

1 — Sail Panels
2 — Zipper Finish
3 — Swing Gate Bar
4 — Zipper Start
5 — Swing Gate Brackets

NOTE: Clean side and rear windows before removal to assist in preventing scratching during removal of the soft top. If zippers are difficult to operate due to road dust, etc., clean them with a mild soap solution and a small brush. Cleaning products are available through your authorized dealer.

1. If your vehicle has half doors, remove each half-door window by opening the door and lifting the half-door window out.

NOTE: Stow the half-door windows carefully outside of the vehicle, never inside, to avoid scratches.

2. Unclip and move the sun visors to the side.
3. Release the header latches and leave the hooks in the loops on the windshield.

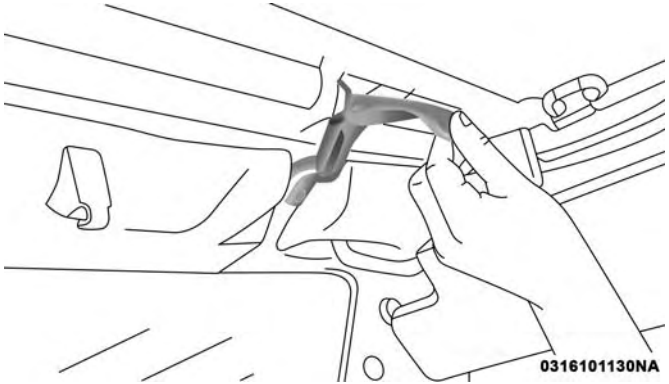

Step Three

4. Open the swing gate.

5. Before unzipping the rear window, release the first 3 inches (7.6 cm) of both sail panels from the channel. Remove the swing gate bar by pulling it straight rearward out of the swing gate brackets.

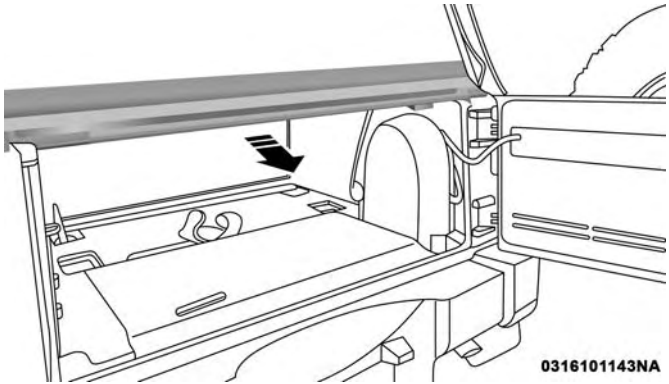

Step Five

6. Unzip the rear window starting at the right lower corner of the window. Pull the zipper up, across the top and down to the left lower corner. **Zipper pulls will stay on the rear window.** Pull down on the rear window to disengage it from the zipper on the top cover.

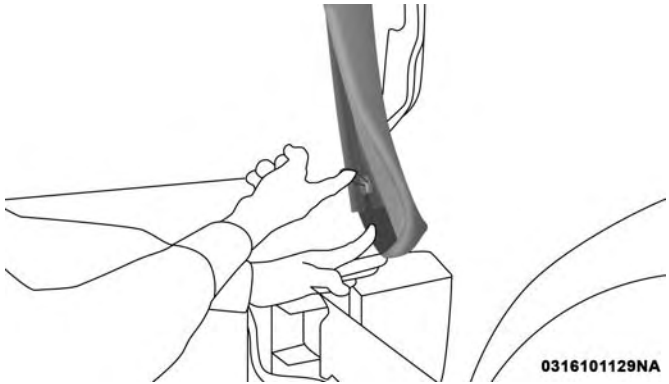

Step Six

7. Remove the rear window retainer from the swing gate bracket on both the left and right sides.

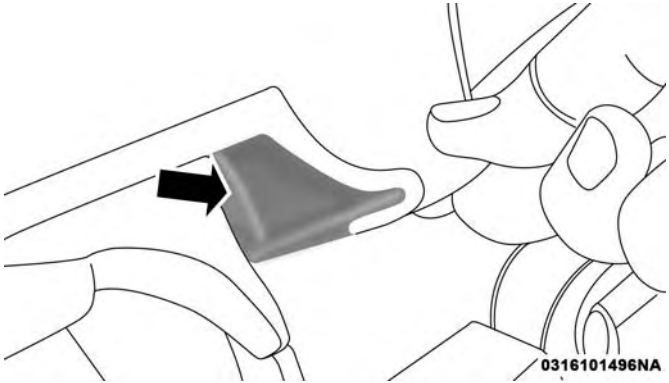

Step Seven

8. Stow the windows carefully to avoid scratching.
9. Undo the Velcro that runs along the top and rear edge of the side window.
10. Beginning from the rear lower corner, completely unzip the window.

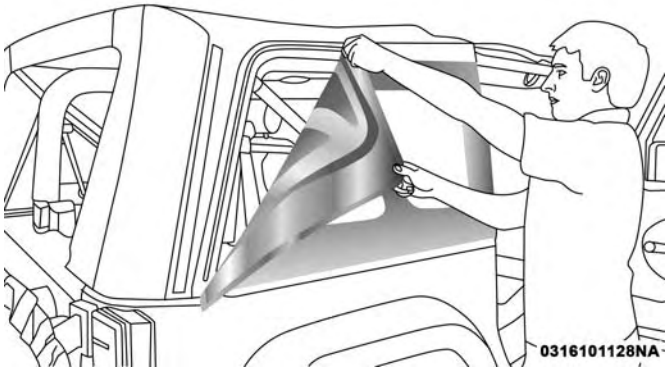

Step Ten

11. Once unzipped, remove the side window retainers from the door channel and body side channel. Repeat this step on the opposite side.

12. Finish releasing the sail panel retainers from the body side channel at the rear corners of the vehicle.

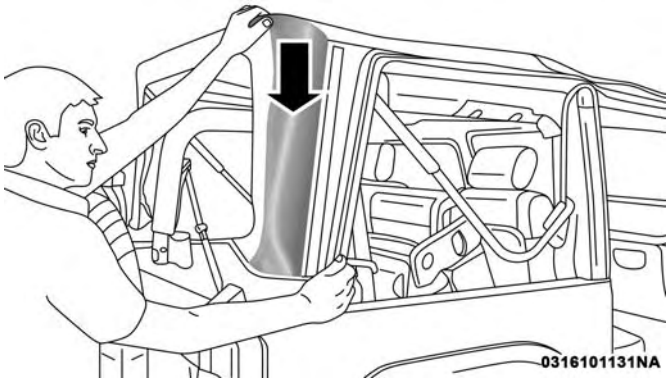

Step Twelve

NOTE: When releasing the sail panel retainers, it is helpful to pull down on the rear roof bow.

13. As you begin to lower the top, fold the sail panels so that they rest on top of the soft top.

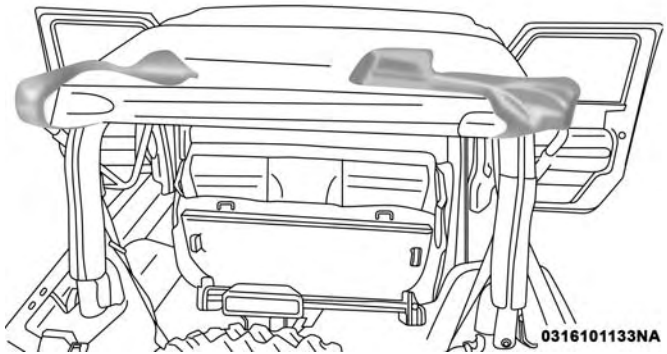

Step Thirteen

14. The swing gate brackets do not need to be removed unless the hard top is being installed. To remove the swing gate brackets, pull the front of the bracket forward while rolling the entire bracket back in toward the vehicle to disengage.

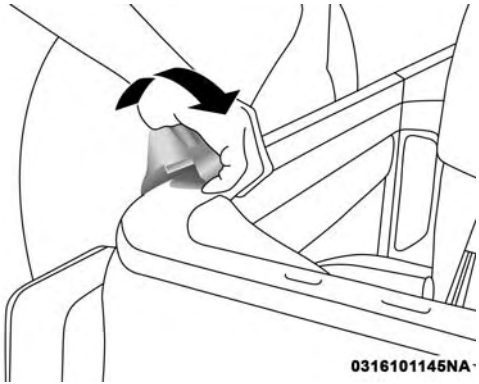

Step Fourteen

15. Completely release the latches from the loops on the windshield frame. **If your vehicle is not equipped with the Sunrider package, proceed to Step 18.**

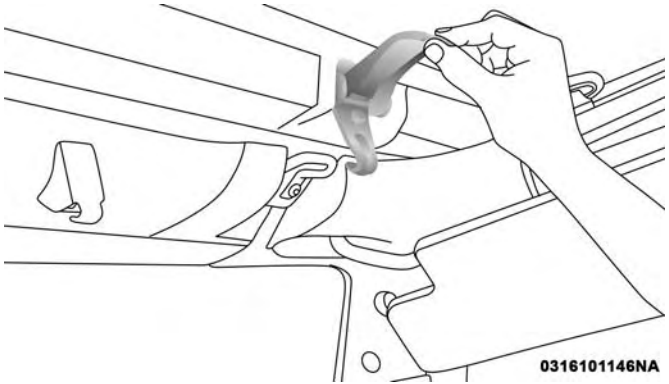

Step Fifteen

16. Make sure the plastic sleeves are slid rearward over the Sunrider link to lock in the link (Sunrider Models only).

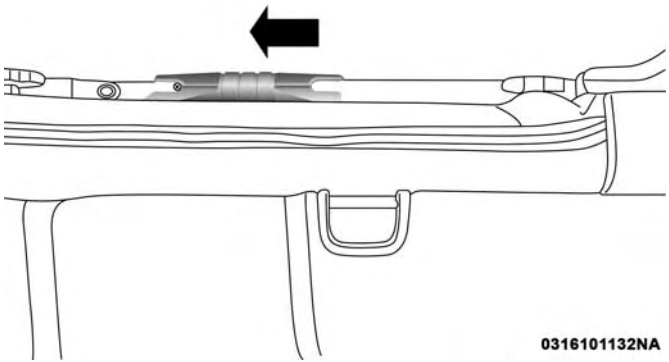

Step Sixteen

17. Unlatch the side bows from both door rails (Sunrider Models only).

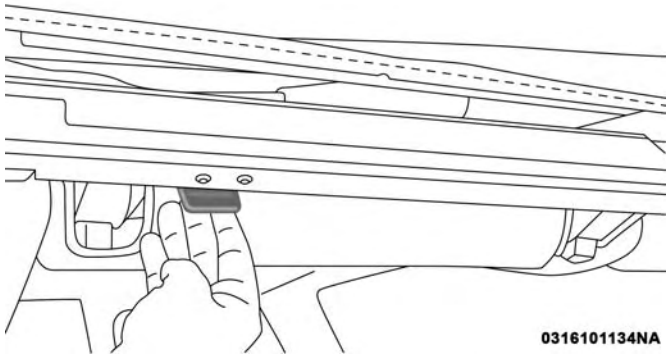

Step Seventeen

18. Before lowering the top, open the swing gate to prevent possible damage to the rear center high-mounted brake light. Move to the front of the vehicle. Grasp the side bow behind the header and lift the top, folding it toward the rear of the vehicle.

NOTE: Help from another person will ease this operation.

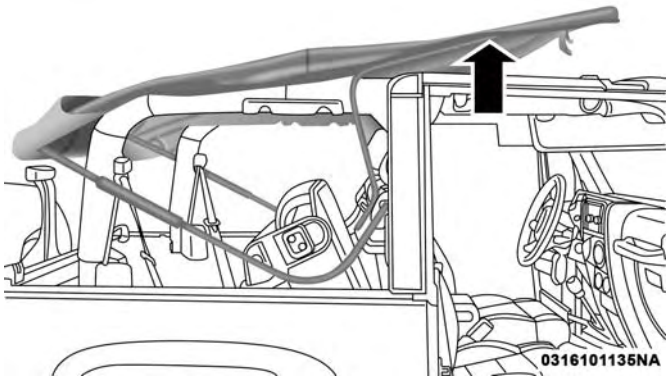

Step Eighteen

19. Tuck the fabric and the check straps between the bows and as far inward as possible. This will keep any portion of the top from flapping outside of the vehicle.

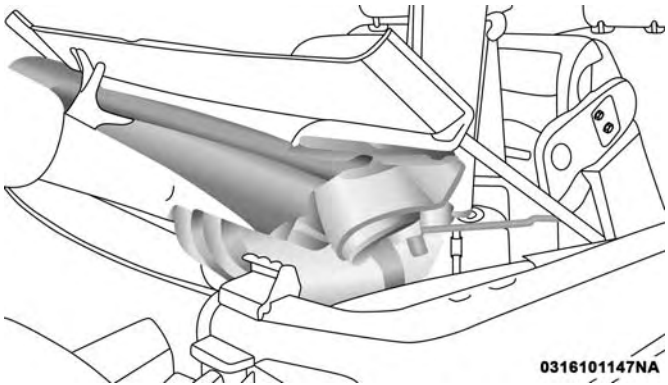

Step Nineteen

20. Close the front header latches.

21. Remove the door frames, if desired. Refer to "Door Frame" in this section for further information.

Raising The Soft Top

1. Unclip and move the sun visors to the side.
2. Install door frames, if removed. Refer to "Door Frame" in this section for further information.
3. Make sure the plastic sleeve is slid over Sunrider link (Sunrider Models only).

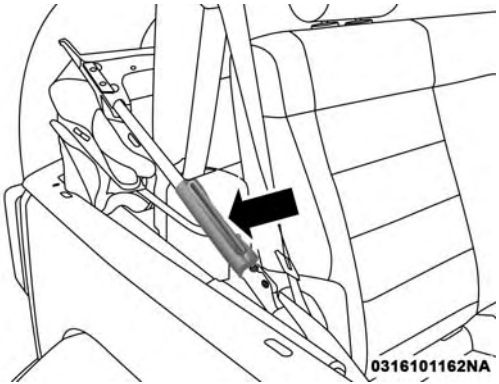

Step Three

4. Standing on the side of the vehicle, lift the top by the side bow and the 2–bow (middle bow) up and over the sports bar until the header rests on the top of the windshield frame.

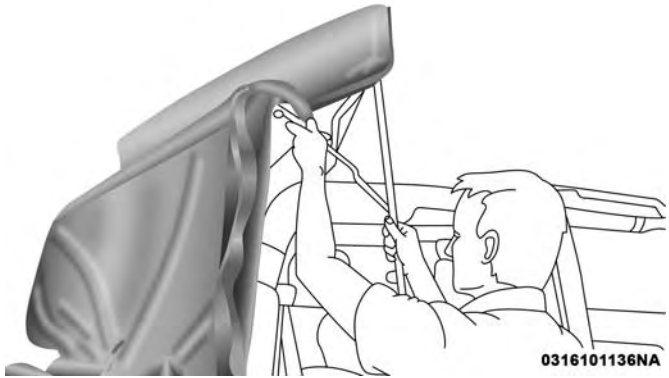

Step Four

5. Make sure the Sunrider bracket on the side bows latches to the door rails (Sunrider Models only).

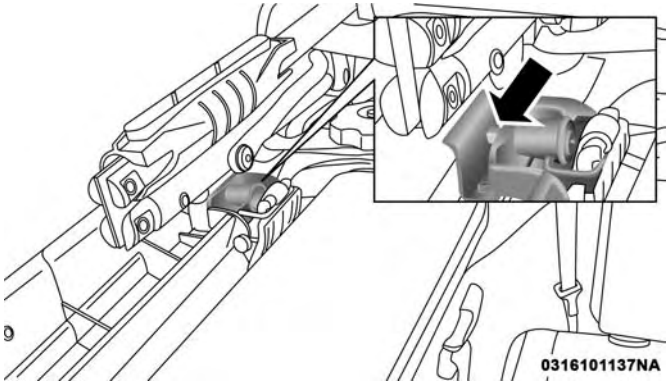

Step Five

6. Open the header latches and engage the hook on each side onto the windshield loops (do not close the latches).

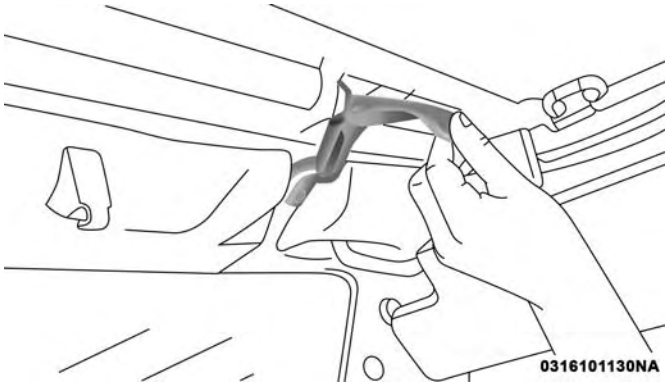

Step Six

7. If the swing gate brackets were removed, install them by hooking the rear edge of the bracket on the interior side of the body channel. Then, rotate it rearward and over the channel until it snaps onto the exterior part of the rail. To be properly located, the bracket must only be clipped to the shortened rail edge.

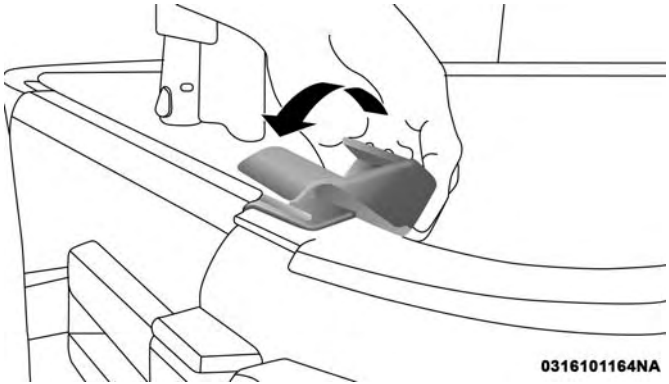

Step Seven

8. Move to the rear of the vehicle and gently pull the sail panels over the rear roof bow.

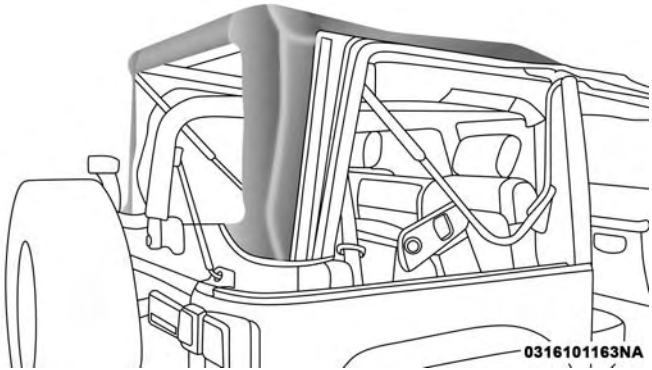

Step Eight

9. Partially install the sail panel retainers into the body side channel, leaving the last 3 inches (7.6 cm) toward the rear window loose (on both sides). Pulling down on the rear roof bow (3–bow) will aid to reach the channel with the retainers.

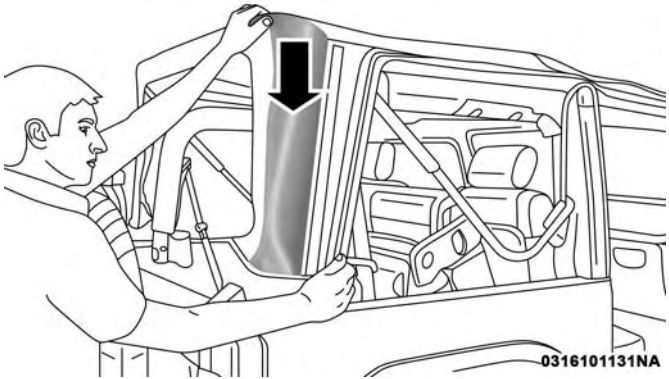

Step Nine

10. To install the side windows, affix the window temporarily by attaching to the Velcro in the rear corner. Start the zipper but close only about 1 inch (2.5 cm).

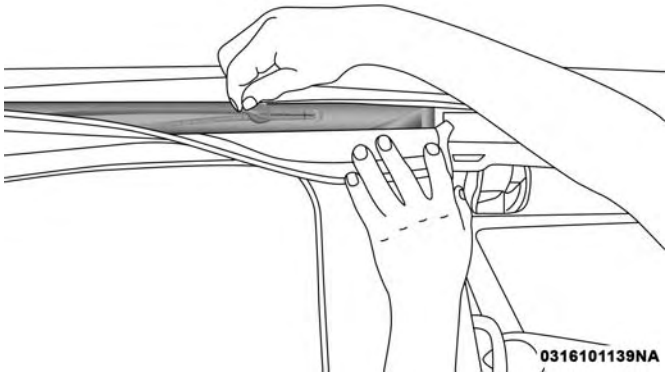

Step Ten

11. Insert the front retainer of the window into the door channel, making sure the retainer is fully seated and properly positioned on the door frame. Failure to do so can result in wind and water leaks or damage to the window.

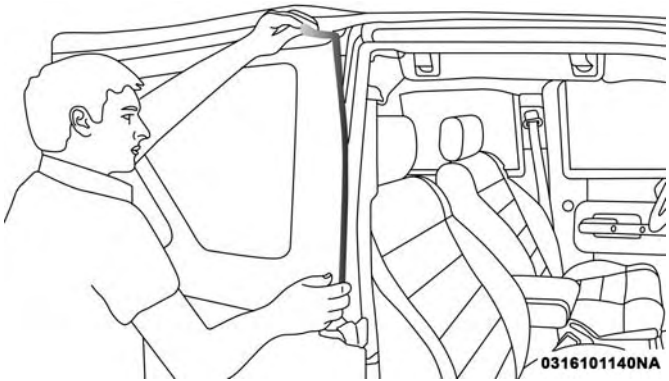

Step Eleven

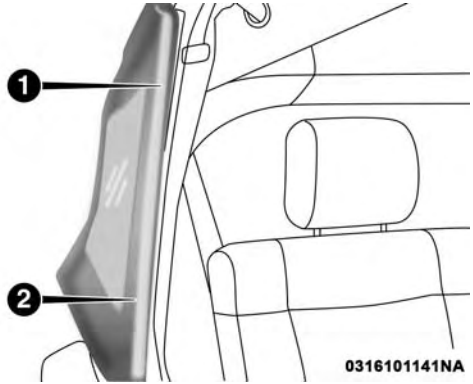

Retainer Insertion

1 — Incorrect Insertion
2 — Correct Insertion

12. Insert the retainer along the bottom edge of the window into the bottom side channel, beginning at the front and working to the rear of the vehicle. Finish by closing the zipper completely and attaching the Velcro along the top and rear of the window. Repeat this step for the opposite side.

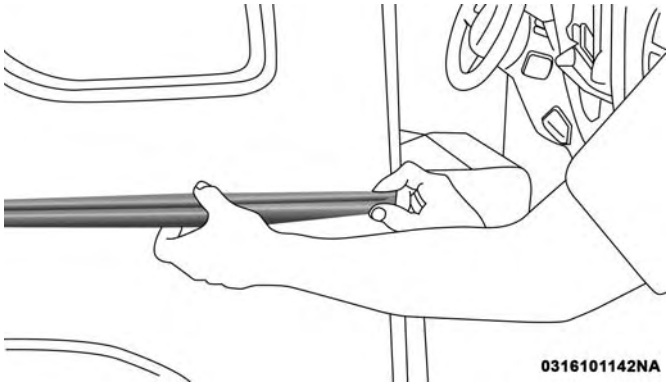

Step Twelve

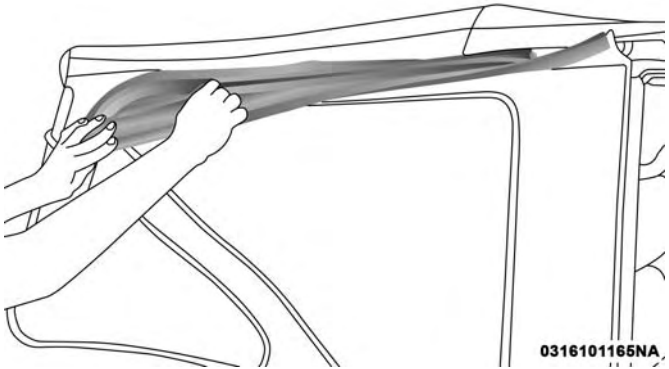

Step Twelve

13. Locate the black swing gate bar. Slide the swing gate bar over the receiver at the bottom inside of the rear window. The spongy part of the seal should be down and pointed outward to seal with the swing gate when closed.

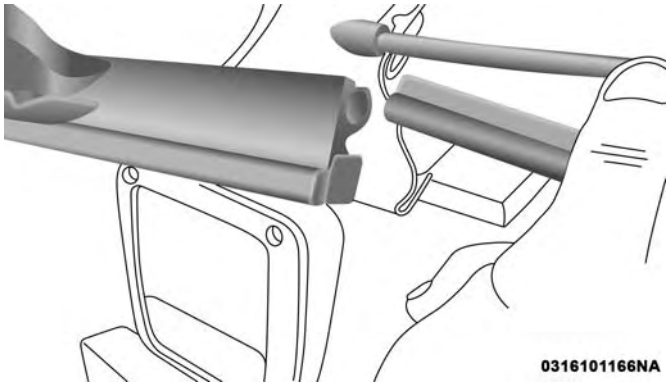

Step Thirteen

14. Install the rear window by starting both zipper ends at the lower left corner of the rear window opening. Ensure that the zippers are properly started and aligned before zipping to prevent damage.

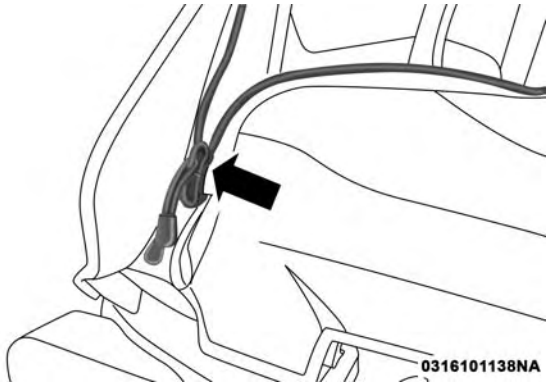

Step Fourteen

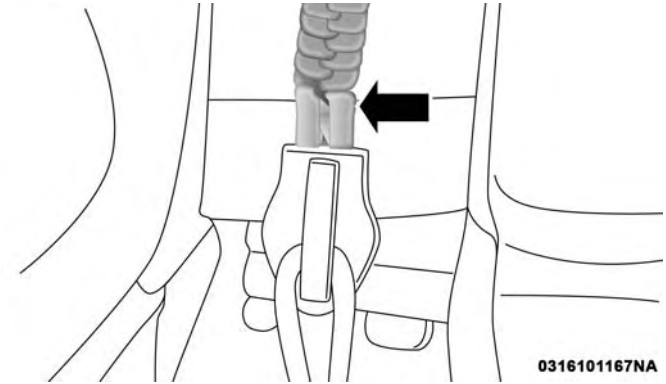

Step Fourteen

15. Run the zipper fully around to the right side of the window.

16. Grasp the swing gate bar and position it into the swing gate brackets.

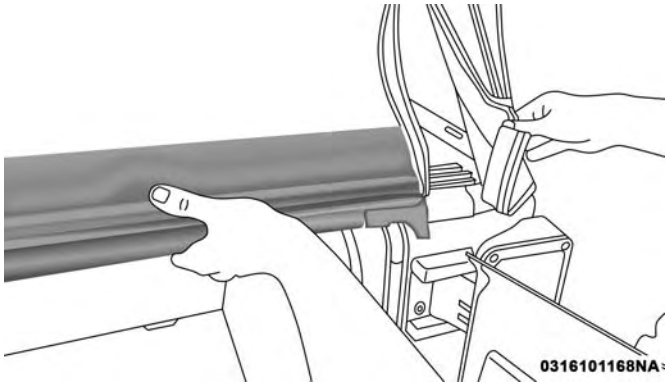

Step Sixteen

17. Insert the rear window retainer into the swing gate bracket on both the left and right sides.

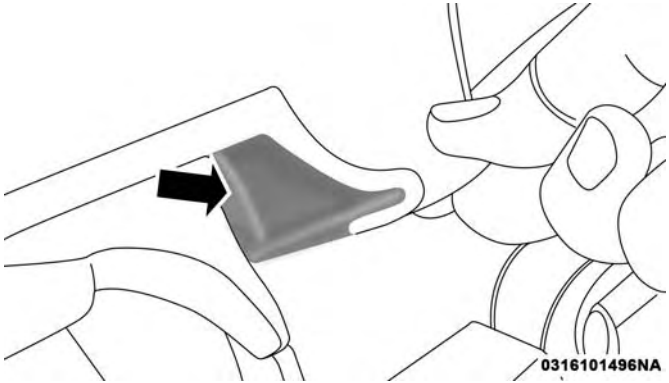

Step Seventeen

18. Apply downward pressure on the top corner of the rear soft top bow (3–bow), then complete attaching the sail panel retainers into the body side channel.

19. Close the header latches and return the sun visors to their secured position.

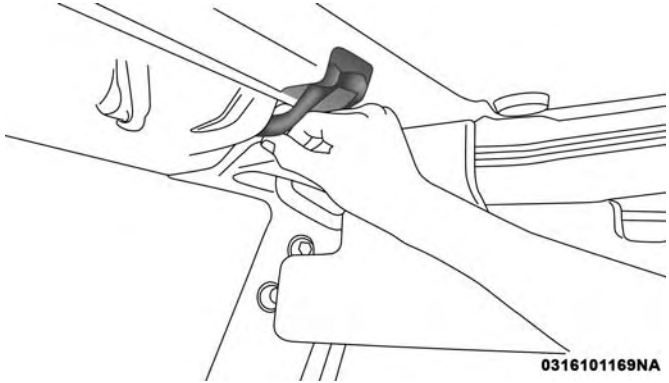

Step Nineteen

SUNRIDER (TWO-DOOR MODELS) — IF EQUIPPED

CAUTION!

Operating the top, opening a door or lowering a window while the top is wet may allow water to drip into the vehicle's interior.

NOTE: If you are going to be driving faster than 40 mph (64 km/h) with the Sunrider feature open, it is recommended that you remove the rear window of the vehicle.

Opening The Sunrider

1. Unclip and move the sun visors to the side.
2. Release the header latches from the loops on the windshield frame.

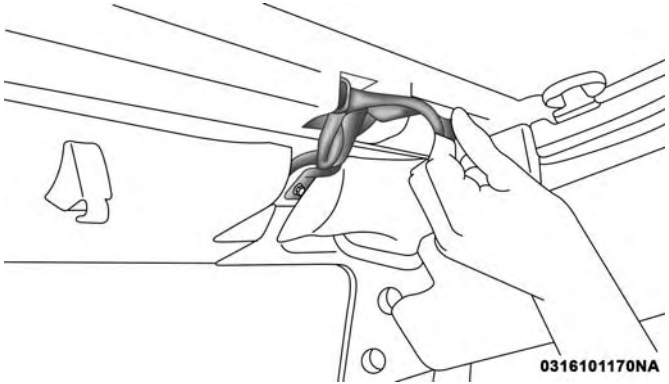

Step Two

3. Make sure to slide the plastic sleeves forward to unlock the Sunrider links.

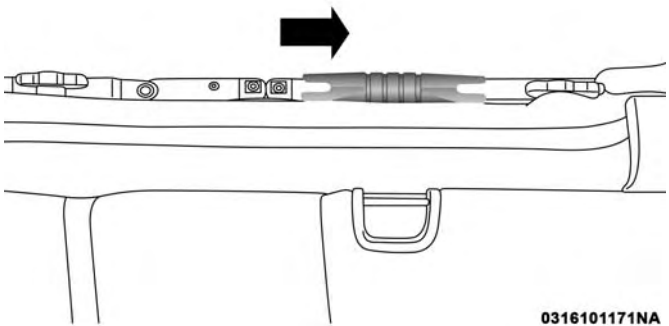

Step Three

4. Grasp the header and lift the top back. Make sure the material is folded back as shown.

NOTE: The Sunrider latch on the door rail should not be activated for Sunrider use. If activated, the soft top must be reinstalled starting from the sail panels.

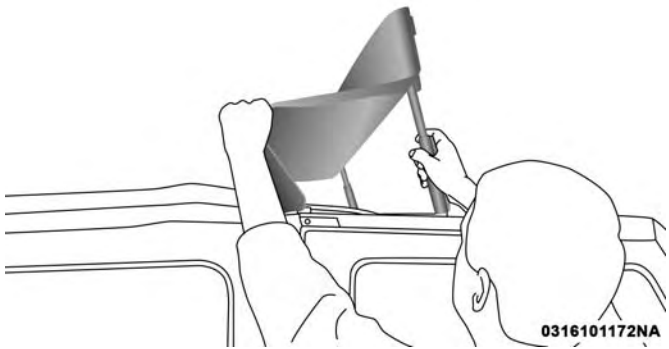

Step Four

5. Locate the straps to secure the side bows. Wrap the straps around the bows as shown. Repeat on the other side.

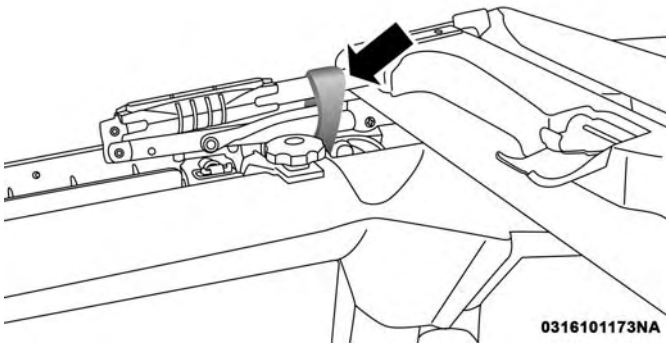

Step Five

6. Reposition the sun visors.

Closing The Sunrider

1. Remove the straps from the side bows.
2. Unclip and move the sun visors to the side.
3. Grasp the front header and pull it to the front of the vehicle.
4. Hook the header latches to the loops on the windshield frame, close latches, and return the sun visors to their original positions.
5. Slide the plastic sleeve rearward over the Sunrider link.

SOFT TOP — FOUR-DOOR MODELS

Please visit http://www.jeep.com/en/wrangler-rooftop-instructions/ for instructional videos.

WARNING!

- **Do not drive the vehicle with the rear window curtain up unless the side curtains are also removed. Dangerous exhaust gases could enter the vehicle causing harm to the driver and passengers.**
- **The fabric upper doors and fabric top are designed only for protection against the elements. Do not rely on them to contain occupants within the vehicle or to protect against injury during an accident. Remember, always wear seat belts.**
- **Make sure hands and fingers are clear of all pinch points when installing and removing the soft tops. The zippers and side bows may cause serious injury if fingers or hands get caught in between.**

CAUTION!

The soft top is not designed to carry any additional loads such as roof racks, spare tires, building, hunting, or camping supplies, and/or luggage, etc. Also, it was not designed as a structural member of the vehicle and, thus, cannot properly carry any additional loads other than environmental (rain, snow, etc.).

If the temperature is below 72°F (24°C) and/or the top has been folded down for a period of time, the top will appear to have shrunk when you raise it, making it difficult to put up. This is caused by a natural contraction of the vinyl coating on the fabric top.

Place the vehicle in a warm area. Pull steadily on the top fabric. The vinyl will stretch back to its original size and the top can then be snapped into place. **If the temperature is 41°F (5°C) or below, do not attempt to put the top down or roll the rear or side curtains.**

CAUTION!

- **Do not run a fabric top through an automatic car wash. Window scratches and wax build up may result.**

(Continued)

CAUTION! ***(Continued)***

- **Do not lower the top when the temperature is below 41°F (5°C). Damage to the top may result.**
- **Do not move your vehicle until the top has been either fully attached to the windshield frame, or fully lowered.**
- **Do not lower the top with the windows installed. Window and top damage may occur.**
- **Refer to "Appearance Care For Fabric Top Models" in "Bodywork" in "Servicing And Maintenance" for further information. It contains important information on cleaning and caring for your vehicle's fabric top.**
- **Do not use any tools (screwdrivers, etc.) to pry or force any of the clamps, clips, or retainers securing the soft top. Do not force or pry the soft top framework when opening or closing. Damage to the top may result.**

Failure to follow these cautions may cause interior water damage, stains or mildew on the top material:

- **It is recommended that the top be free of water prior to opening it. Operating the top, opening a door or lowering a window while the top is wet may allow water to drip into the vehicle's interior.**

(Continued)

CAUTION! *(Continued)*

- **Careless handling and storage of the soft top may damage the seals, causing water to leak into the vehicle's interior.**
- **The soft top must be positioned properly to ensure sealing. Improper installation can cause water to leak into the vehicle's interior.**

NOTE: Do not remove any of the three attachment knobs unless you are planning on installing the hard top.

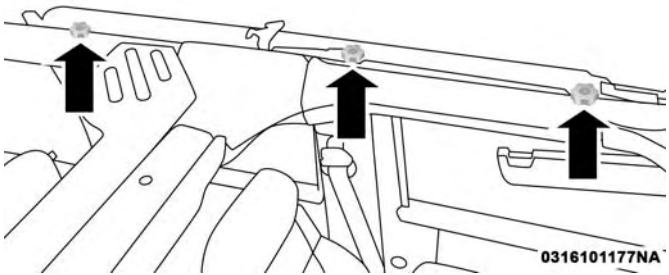

Attachment Knobs

Quick Steps For Lowering The Soft Top

1. Remove the side windows.

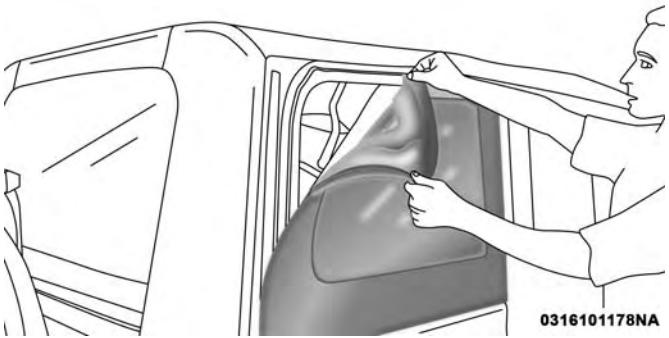

Step One

2. Remove the back window.

NOTE: Start zipper from the right side to remove back window.

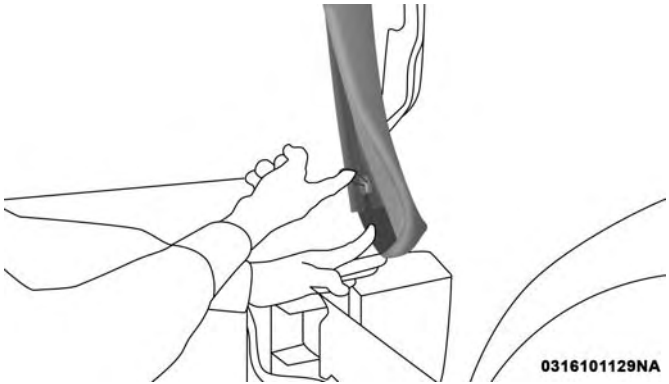

Step Two

3. Release header latches from the windshield frame.

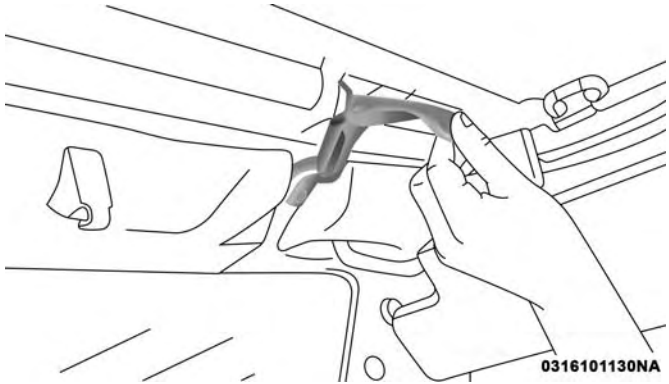

Step Three

4. Release the sail panel retainers from the body side channel at the rear corners of the vehicle.

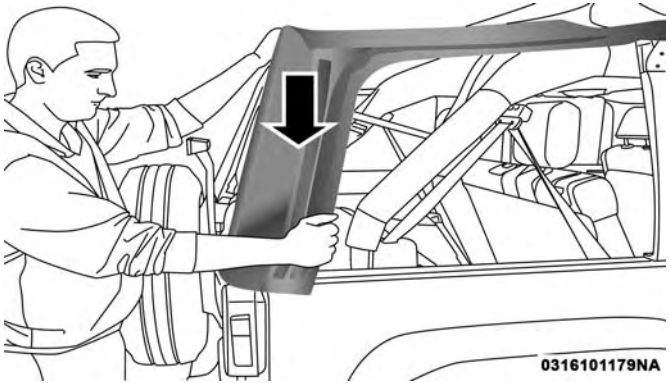

Step Four

NOTE: When releasing the sail panel retainers, it is helpful to pull down on the rear roof bow.

5. Fold the sail panels so that they rest on top of the soft top.

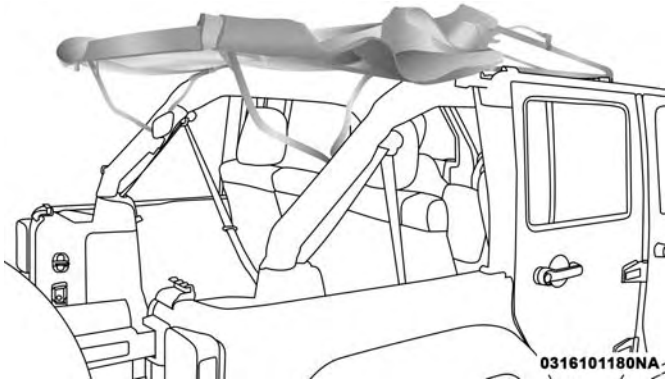

Step Five

6. Fold header rearward, pulling the fabric to the rear.

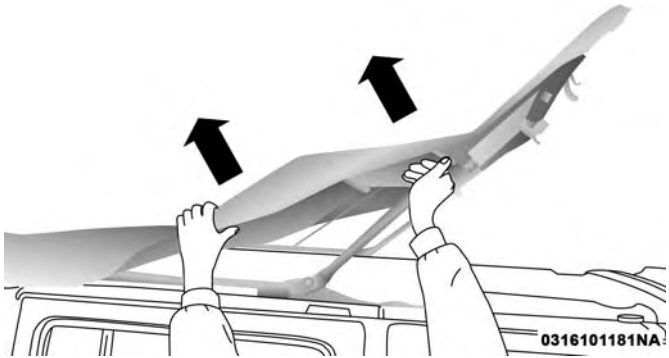

Step Six

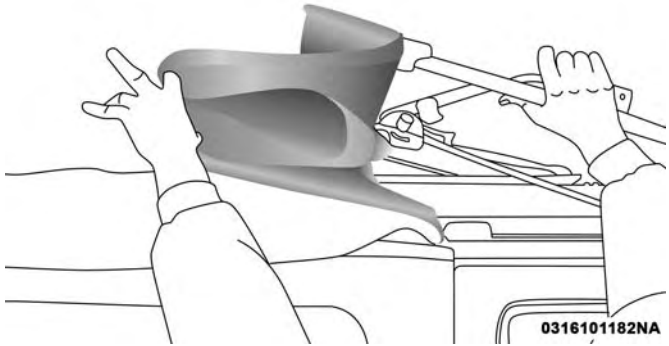

Step Six

7. Release Sunrider latch (both sides).

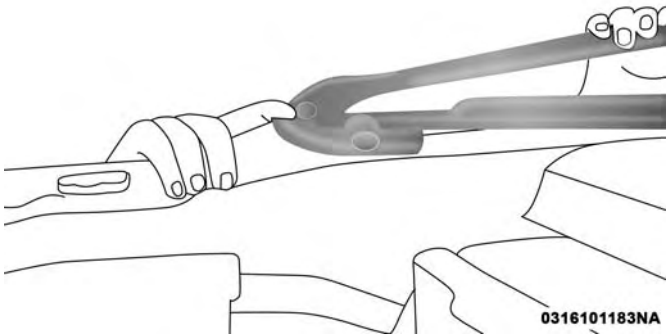

Step Seven

8. Open the swing gate and lower the top.

Step Eight

NOTE: Ensure the fabric does not overhang the sides of the vehicle.

Quick Steps For Raising The Soft Top

1. Open the swing gate and raise the top, engaging the Sunrider latches (another person may be needed to help with this operation).

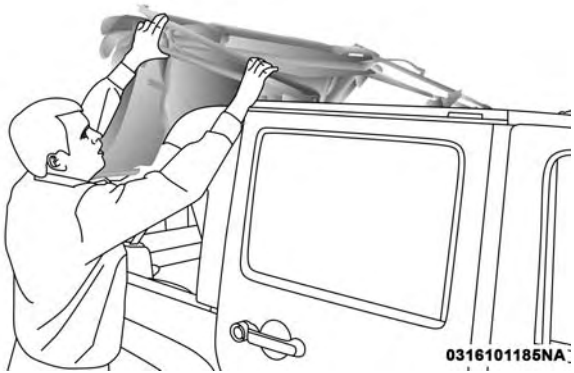

Step One

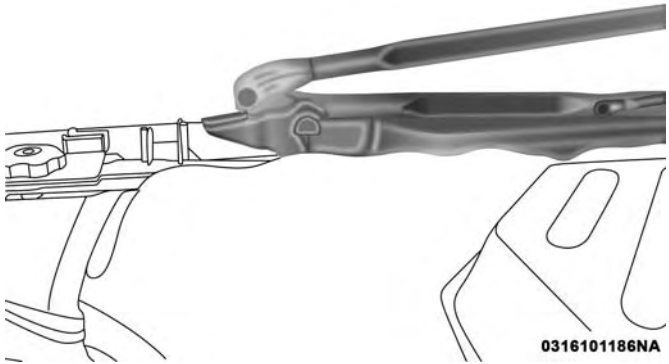

Step One

2. Install rear corner panels.

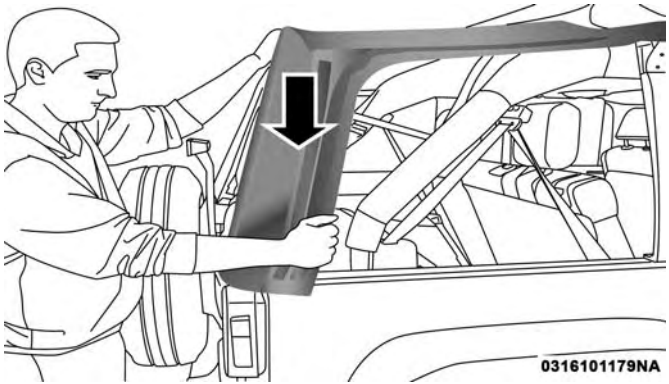

Step Two

3. Rotate the header forward.

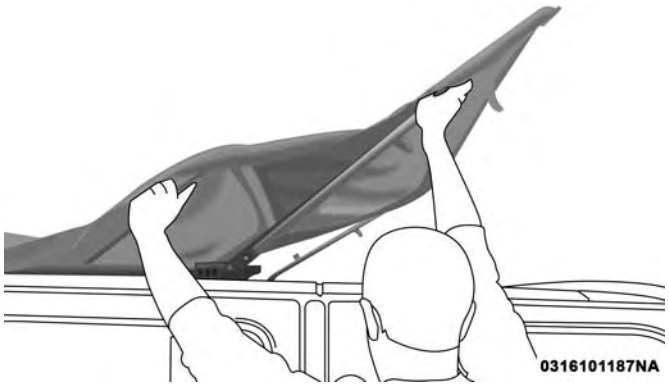

Step Three

4. Engage the header latches.

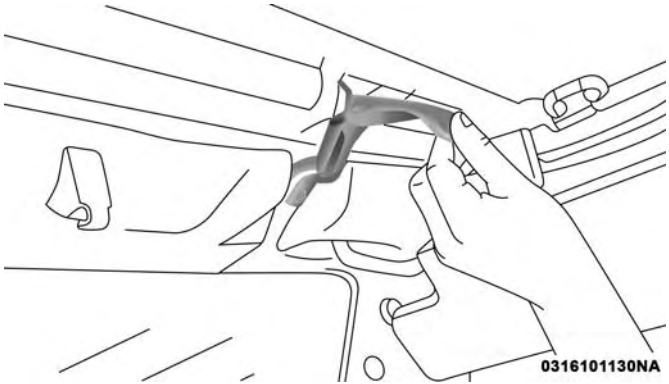

Step Four

5. Install the back window.

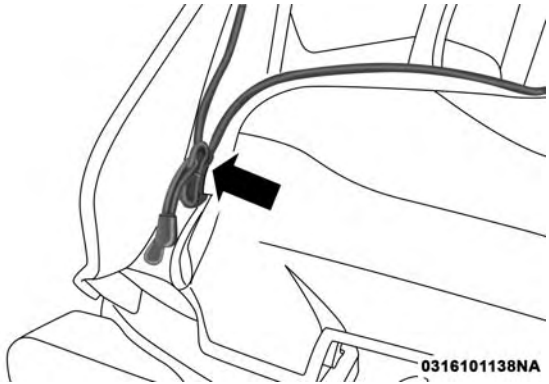

Step Five

6. Install the side windows.

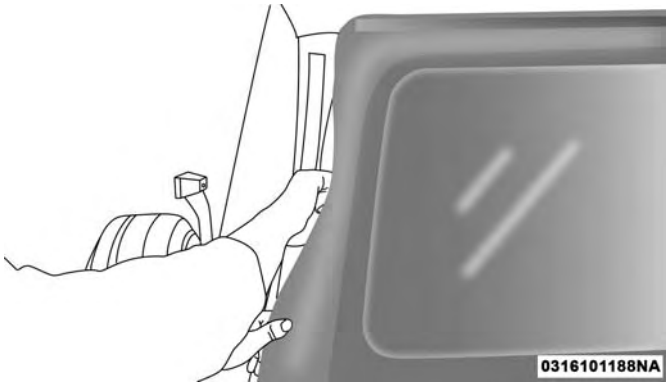

Step Six

7. To install the side windows, affix the window temporarily by attaching to the Velcro in the rear corner. Start the zipper but close only about 1 inch (2.5 cm).

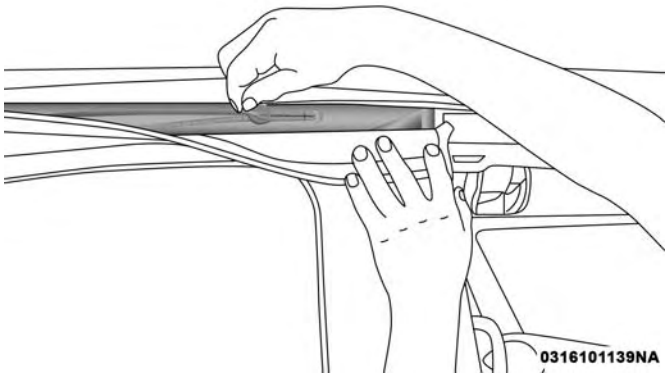

Step Seven

8. Insert the front retainer of the window into the door channel, making sure the retainer is fully seated and properly positioned on the door frame. Failure to do so can result in wind and water leaks or damage to the window.

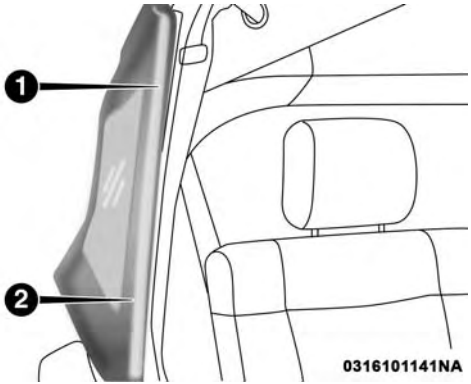

Retainer Insertion

1 — Incorrect Insertion
2 — Correct Insertion

9. Insert the retainer along the bottom edge of the window into the bottom side channel, beginning at the front and working to the rear of the vehicle. Finish by closing the zipper completely and attaching the Velcro along the top and rear of the window. Repeat this step for the opposite side.

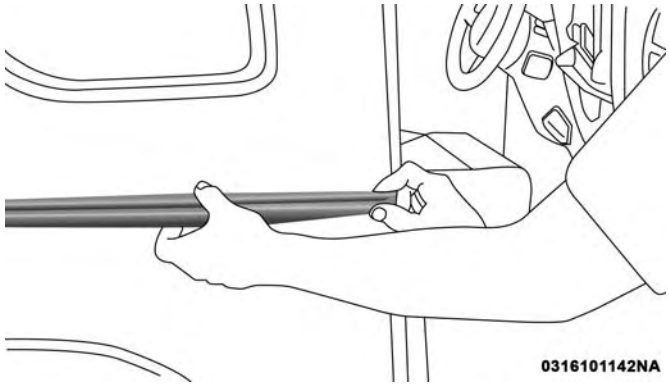

Step Nine

Folding Down The Soft Top

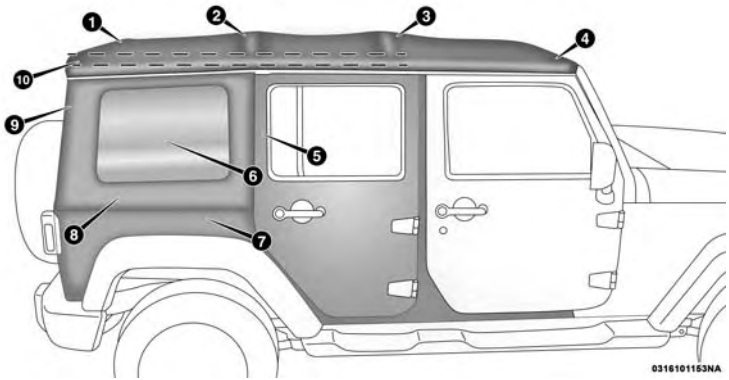

Side View Top And Components

1 — 4– Bow
2 — 3–Bow
3 — 2–Bow
4 — Header Bow
5 — Front Retainer — Quarter Window
6 — Quarter Window
7 — Body Side Retainer
8 — Bottom Retainer — Quarter Window
9 — Sail Panel
10 — Check Strap

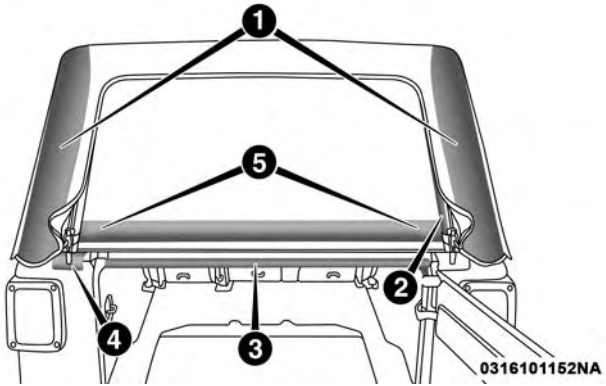

Rear View Top And Components

1 — Sail Panels
2 — Zipper Finish
3 — Swing Gate Bar
4 — Zipper Start
5 — Swing Gate Brackets

NOTE: Clean side and rear windows before removal to assist in preventing scratching during removal of the soft top. If zippers are difficult to operate due to road dust, etc., clean them with a mild soap solution and a small brush. Cleaning products are available through your authorized dealer.

1. If your vehicle has half-doors, remove each half-door window by opening the door and lifting the half-door window out.

NOTE: Stow half-door windows carefully outside of the vehicle, never inside, to avoid scratches.

2. Unclip and move the sun visors to the side.
3. Release the header latches and hooks from the loops on the windshield frame.

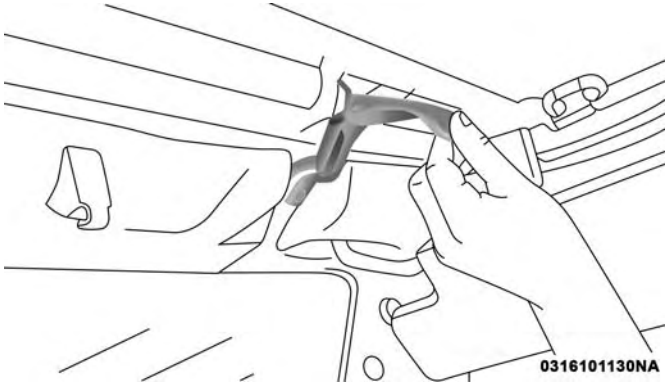

Step Three

4. Open the swing gate.
5. Before unzipping the rear window, release the first 3 inches (7.6 cm) of both sail panels from the channel. Remove the swing gate bar by pulling it straight rearward out of the swing gate brackets.

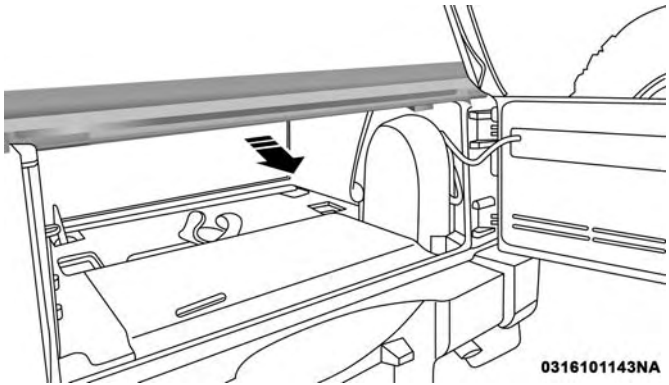

Step Five

6. Unzip the rear window starting at the right lower corner of the window. Pull the zipper up, across the top and down to the left lower corner. **Zipper pulls will stay on the rear window.** Pull down on the rear window to disengage it from the zipper on the top cover.

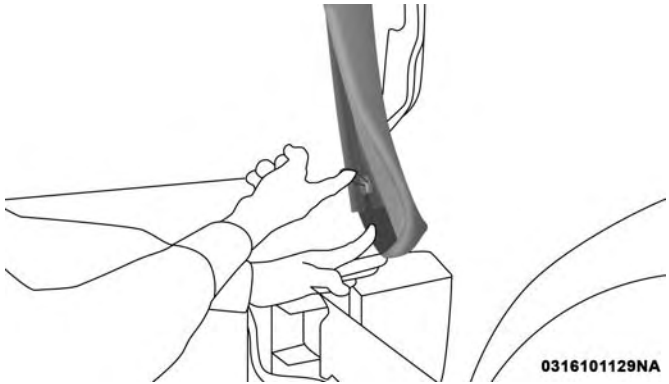

Step Six

7. Remove the rear window retainer from the swing gate bracket on both the left and right sides.

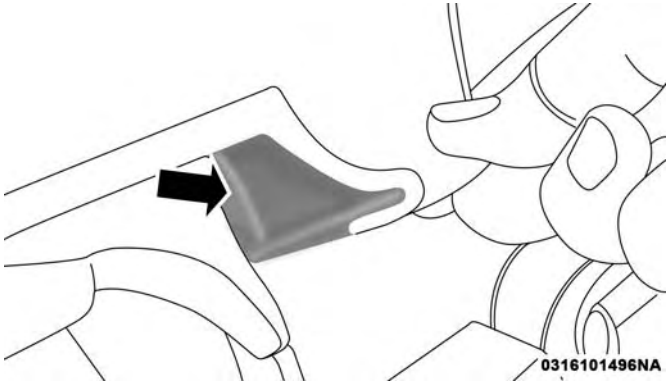

Step Seven

8. Stow the windows carefully to avoid scratching.

9. Undo the Velcro that runs along the top and rear edge of the side window.

10. Beginning from the rear lower corner, completely unzip the window.

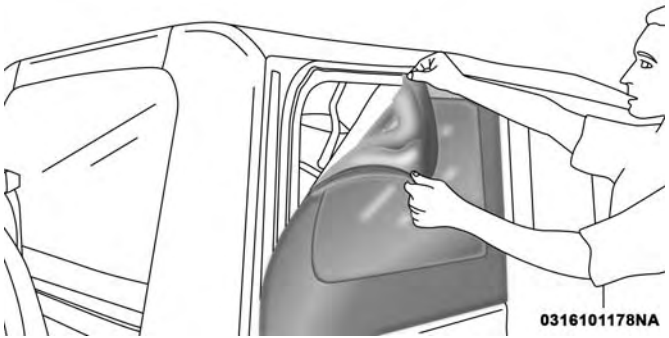

Step Ten

11. Once unzipped, remove the side window retainers from the door channel and body side channel. Repeat this step on the opposite side.

12. Finish releasing the sail panel retainers from the body side channel at the rear corners of the vehicle.

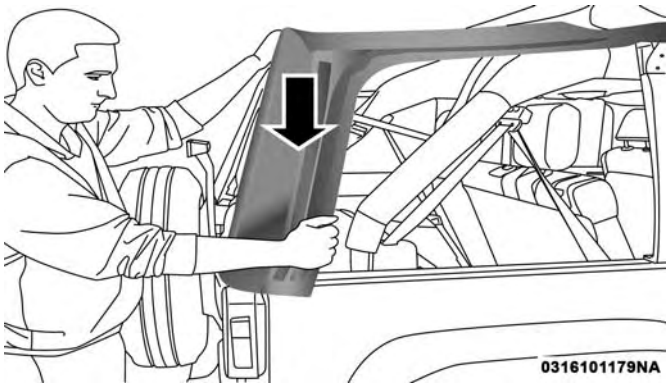

Step Twelve

NOTE: When releasing the sail panel retainers, it is helpful to pull down on the rear roof bow.

13. Fold the sail panels so that they rest on top of the soft top.

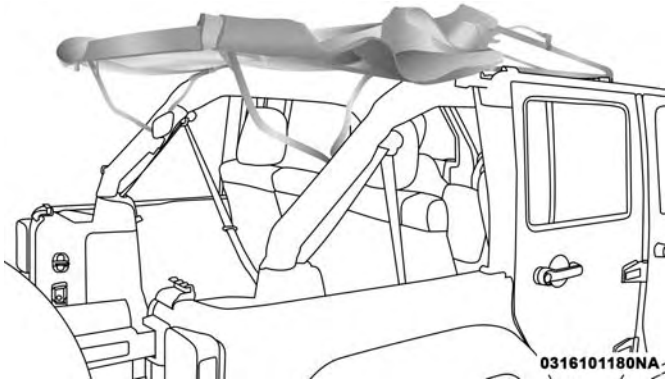

Step Thirteen

14. The swing gate brackets do not need to be removed unless the hard top is being installed. To remove the swing gate brackets, pull the front of the bracket forward while rolling the entire bracket back in toward the vehicle to disengage.

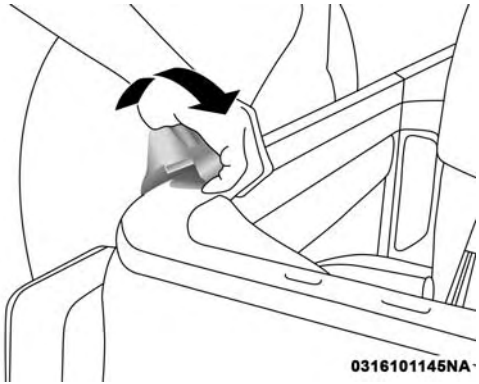

Step Fourteen

15. Grasp the front side bow behind the header, and lift the top.

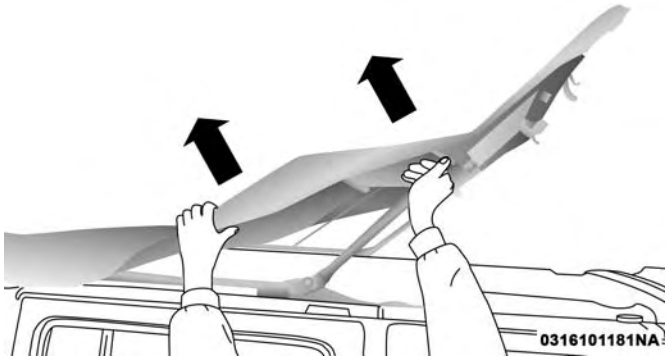

Step Fifteen

16. Fold back the front section of the top, pulling the fabric rearward. Gently rest the header on top of the rear portion of the deck.

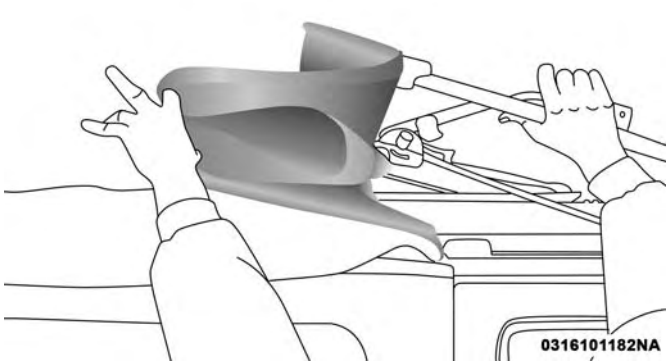

Step Sixteen

17. Fold the top so that the material forms a "W" as shown. Enter the vehicle and move the material into two folds.

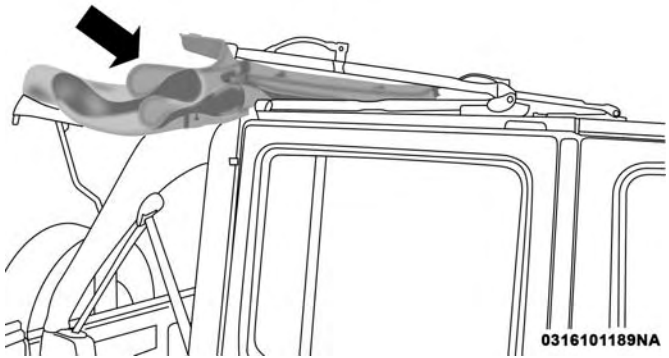

Step Seventeen

18. Release the side bows by pushing down on the latch above the front of the rear door. Push the top rearward to disengage. Repeat this step on the other side.

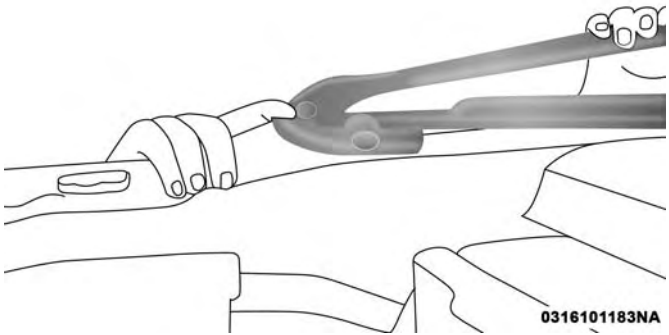

Step Eighteen

19. Before lowering the top, open the swing gate to prevent possible damage to the rear center high-mounted brake light. Grasp the folded side bows and slide the top along the door frame track to the rear door frame.

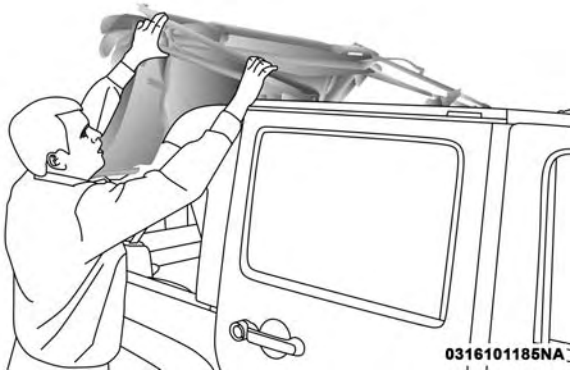

Step Nineteen

20. Gently slide the side bows off the door frame track and lower the top down into the vehicle.

NOTE: Help from another person will ease this operation.

Step Twenty

21. Tuck the fabric and the check straps between the bows as far inside as possible. This will keep any portion of the top from flapping outside of the vehicle.

22. Once the top is fully down, use the Velcro straps provided to secure the top to the vehicle by wrapping the strap around the side bows and through the slot on the body.

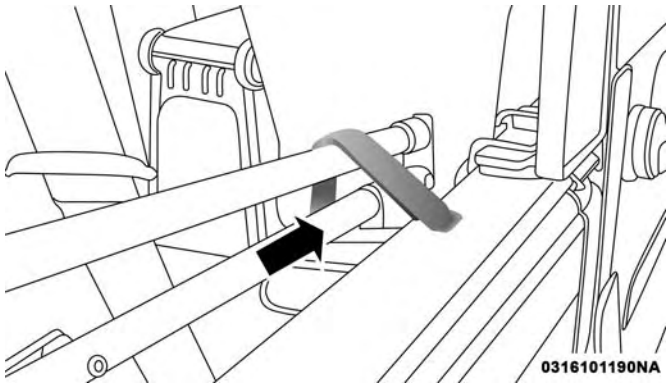

Step Twenty-Two

23. Close the front header latches.

24. Remove the door frames, if desired. Refer to “Door Frame” in this section for further information.

Putting Up The Soft Top

NOTE: Be extremely careful when putting up the soft top to prevent the doors from getting scratched. It may be helpful to open the rear doors.

1. Install the door frames, if removed. Refer to "Door Frame" in this section for further information.
2. Undo the straps used to secure the top in the down position and store in secure location.
3. Open the swing gate.
4. Grasp the folded side bows and lift to the top of the rear door frames.

NOTE: Help from another person will ease this operation.

Step Four

5. Insert the slider feature of the knuckles into the door frame tracks and slide the top forward.

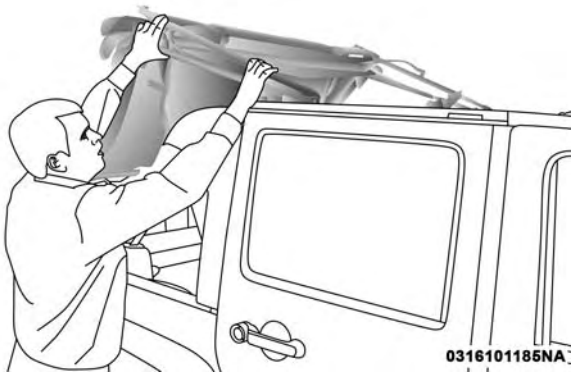

Step Five

6. Ensure that the top locks into the Sunrider locking mechanisms that are located above the front of the rear doors.

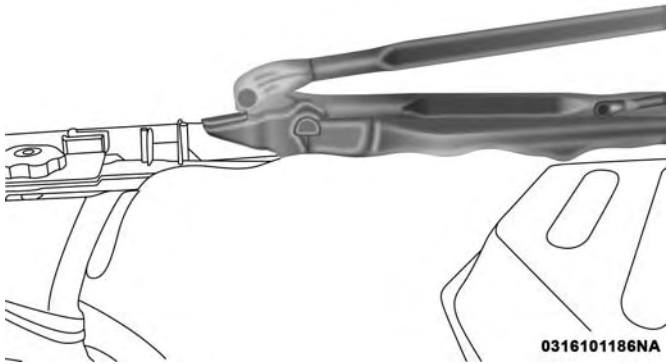

Step Six

7. Unclip and move the sun visors to the side.
8. Standing on the side of the vehicle, lift the top by the side bow until it rests on the windshield frame.

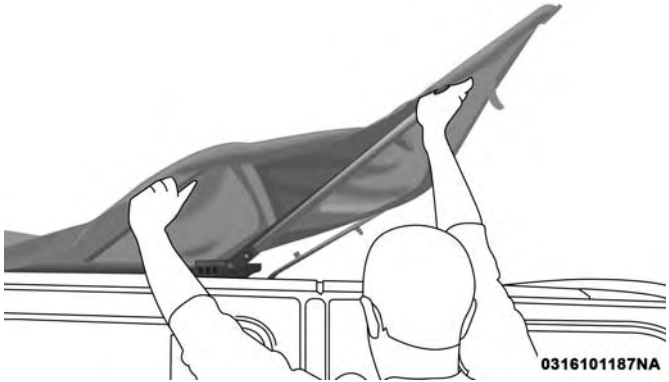

Step Eight

9. Open the header latches and engage the hook on each side onto the windshield loops (do not close the latches).

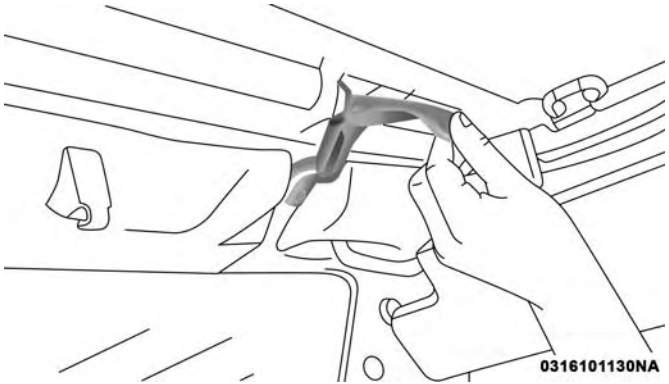

Step Nine

10. If the swing gate brackets were removed, install them by hooking the rear edge of the bracket on the interior side of the body channel. Then, rotate it rearward and over the channel until it snaps onto the exterior part of the rail. To be properly located, the bracket must only be clipped to the shortened rail edge.

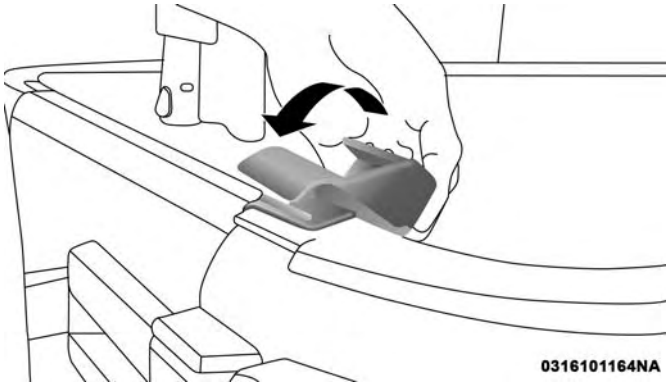

Step Ten

11. Ensure that the straps are positioned correctly before pulling the sail panels over the rear roof bow (4–bow).

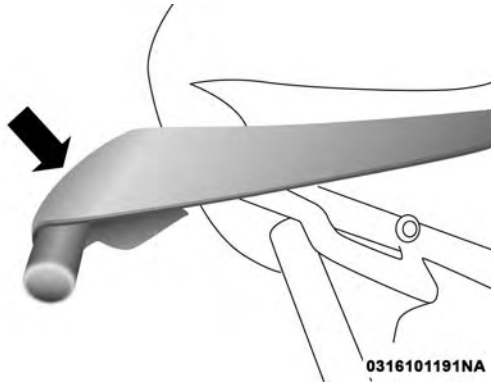

Step Eleven

Partially install the sail panel retainers into the body side channel, leaving the last 3 inches (7.6 cm) toward the rear window loose (on both sides). Pulling down on the rear roof bow (4–bow) will aid in reaching the channel with the retainers.

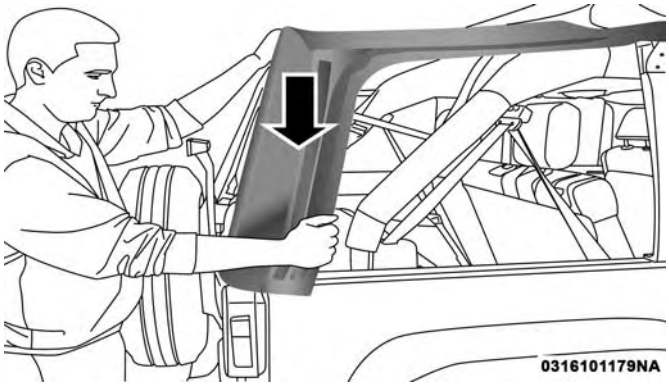

Step Eleven

12. To install the side windows, affix the window temporarily by attaching it to the Velcro in the upper rear corner. Start the zipper but close only about 1 inch (2.5 cm).

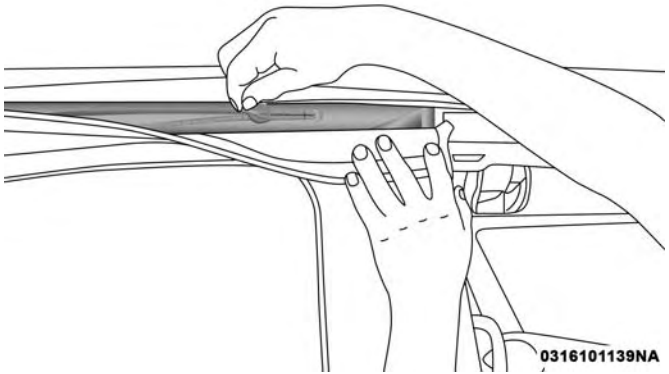

Step Twelve

13. Insert the front retainer of the window into the door channel, making sure the retainer is fully seated and properly positioned on the door frame. Failure to do so can result in wind and water leaks or damage to the window.

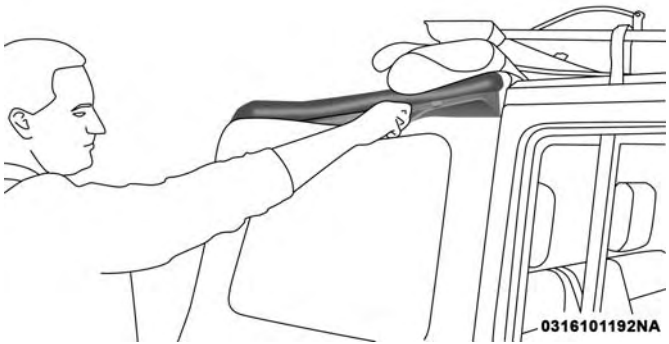

Step Thirteen

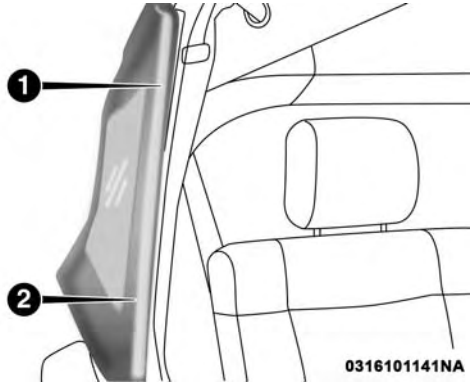

Retainer Insertion

1 — Incorrect Insertion
2 — Correct Insertion

14. Insert the retainer along the bottom edge of the window into the bottom side channel, beginning at the front and working to the rear of the vehicle. Finish by closing the zipper completely and attaching the Velcro along the top and rear of the window. Repeat this step for the opposite side.

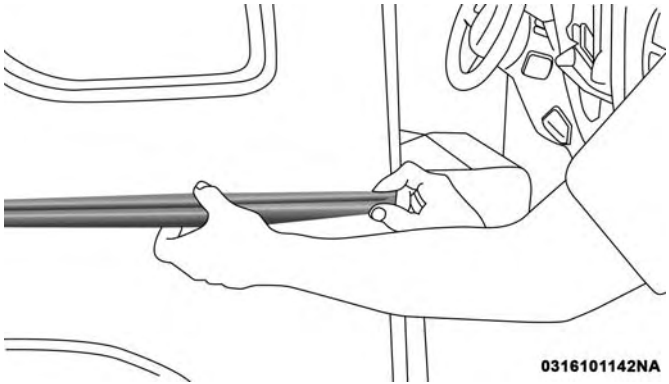

Step Fourteen

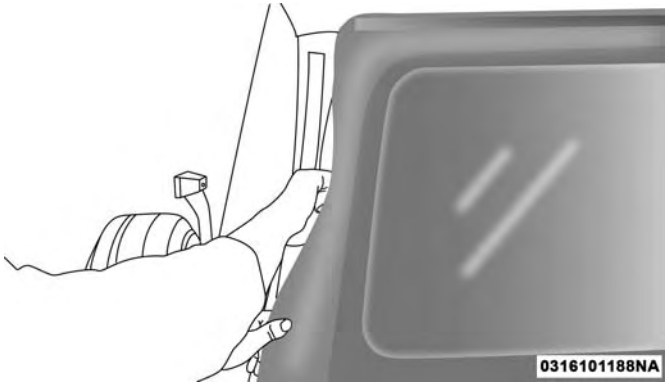

Step Fourteen

15. Locate the black swing gate bar. Slide the swing gate bar over the receiver at the bottom inside of the rear window. The spongy part of the seal should be down and pointed outward to seal with the swing gate when closed.

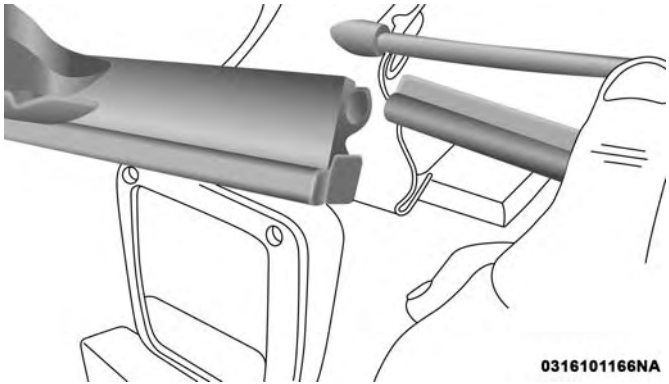

Step Fifteen

16. Install the rear window by starting both zipper ends at the lower left corner of the rear window opening. Ensure that the zippers are properly started and aligned before zipping to prevent damage.

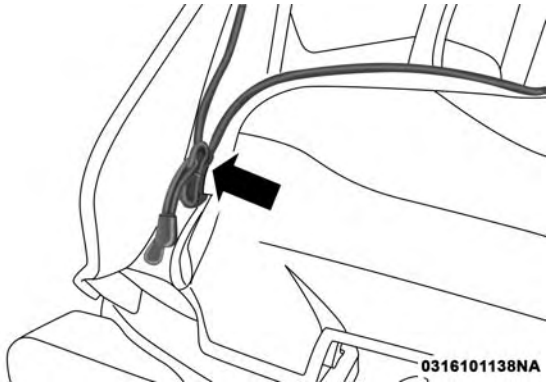

Step Sixteen

17. Run the first zipper fully around to the right side of the window.
18. Grasp the swing gate bar and position it into the swing gate brackets.

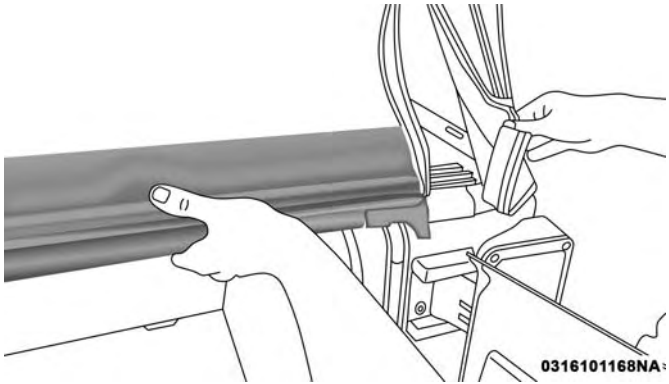

Step Eighteen

19. Insert the rear window retainer into the swing gate bracket on both the left and right sides.

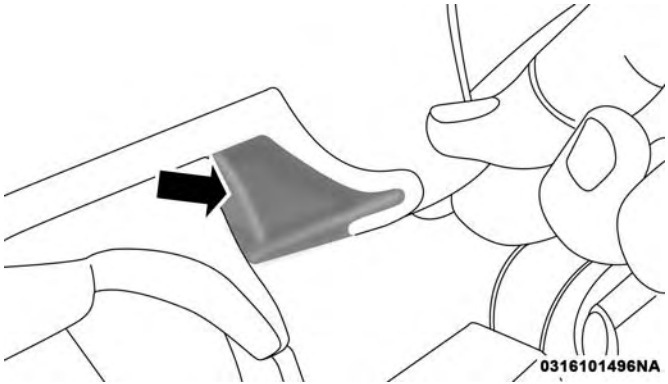

Step Nineteen

20. Complete the installation of the sail panel by inserting the rest of the retainer into the body channel.

21. Close the header latches and return the sun visors to their secured position.

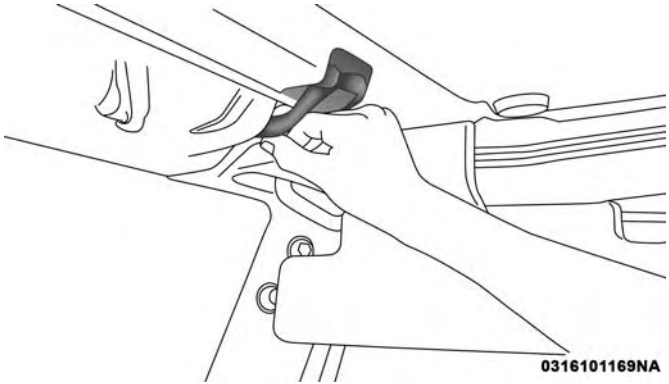

Step Twenty-One

SUNRIDER (FOUR-DOOR MODELS) — IF EQUIPPED

CAUTION!

Operating the top, opening a door or lowering a window while the top is wet may allow water to drip into the vehicle's interior.

NOTE: If you are going to be driving faster than 40 mph (64 km/h) with the Sunrider feature open, it is recommended that you remove the rear window of the vehicle.

Opening The Sunrider

1. Unclip and move the sun visors to the side.
2. Release the header latches from the loops on the windshield frame.

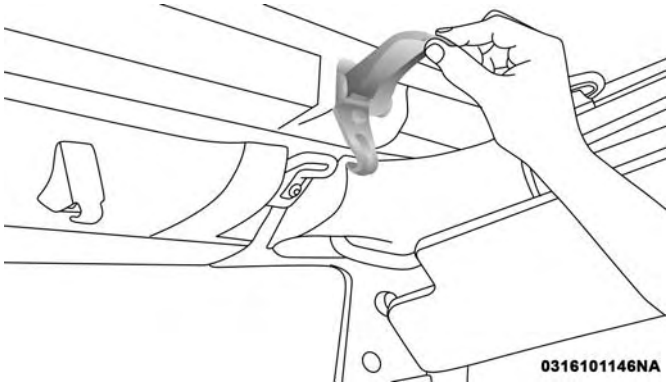

Step Two

3. Grasp the front side bow behind the header, and lift the top.

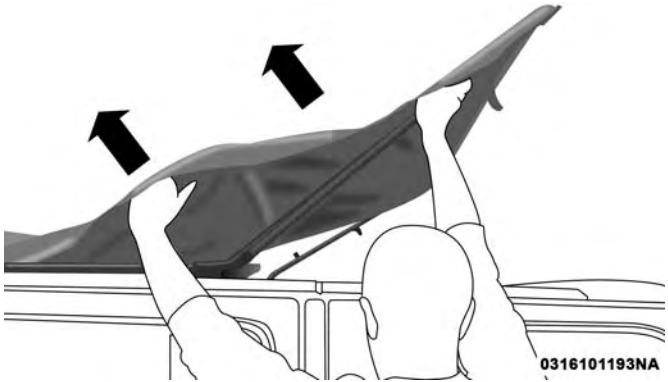

Step Three

4. Fold back the front section of the top and gently rest the header on top of the rear portion of the deck.

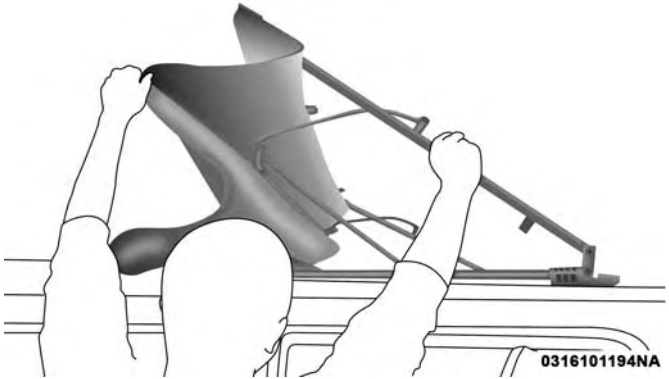

Step Four

5. Fold the top so that the material forms a "W" as shown. Enter the vehicle and move the material into two folds.

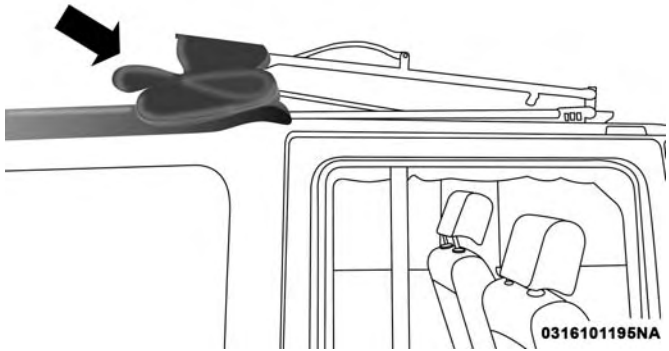

Step Five

6. Secure the top by using the two provided straps. Each strap will wrap around the side bow and Velcro to itself; use one strap on each side of the vehicle.

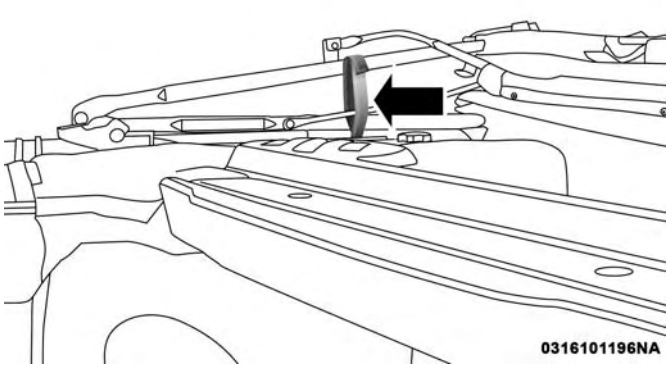

Step Six

Closing The Sunrider

Perform the above steps in the opposite order.

NOTE: Failure to fold the fabric rearward will allow the material to sag and may block the rearview mirror.

FOLDING WINDSHIELD

The fold-down windshield and removable side bars on your vehicle are structural elements that can provide some protection in some accidents. The windshield also provides some protection against weather, road debris and intrusion of small branches and other objects.

Do not drive your vehicle on-road with the windshield down and the side bars removed as you lose the protection these structural elements can provide.

If required for certain off-road uses, the side bars can be removed and the windshield folded down. However, the protection afforded by these features is then lost. If you remove the side bars and fold down the windshield, drive slowly and cautiously. It is recommended that the speed of the vehicle be limited to 10 mph (16 km/h), with low range operation preferred if you are driving off-road with the windshield folded down.

Raise the windshield and reinstall the side bars as soon as the task that required their removal is completed and before you return to on-road driving. Both you and your passenger should wear seat belts at all times, on-road and off-road, regardless of whether the windshield is raised or folded down.

Outside rearview mirrors are mounted on the doors. If you choose to remove the doors, see your authorized dealer for a replacement cowl-mounted outside mirror. Federal law requires outside mirrors on vehicles for on-road use.

WARNING!

Carefully follow these warnings to help protect against personal injury:

- **Do not drive your vehicle on-road with the windshield down.**
- **Do not drive your vehicle unless the windshield is securely fastened, either up or down.**
- **Eye protection, such as goggles, should be worn at all times when the windshield is down.**
- **Be sure that you carefully follow the instructions for raising the windshield. Make sure that the folding windshield, windshield wipers, side bars, and all associated hardware and fasteners are correctly and tightly assembled before driving your vehicle. Failure to follow these instructions may prevent your vehicle from providing you and your passengers' protection in some accidents.**

(Continued)

WARNING! ***(Continued)***

- **If you remove the doors, store them outside the vehicle. In the event of an accident, a loose door may cause personal injury.**

Lowering The Windshield And Removing Side Bars

1. Lower the fabric top or remove the hard top following the instructions in this manual.

NOTE: To assist in properly reinstalling side bars, mark the original locations prior to removing.

2. Remove the two top hex bolts (13 mm), and the one side hex bolt (13 mm) visible through the trim (Do not remove plastic corner trim, sun visor bolts, or sport bar covering).

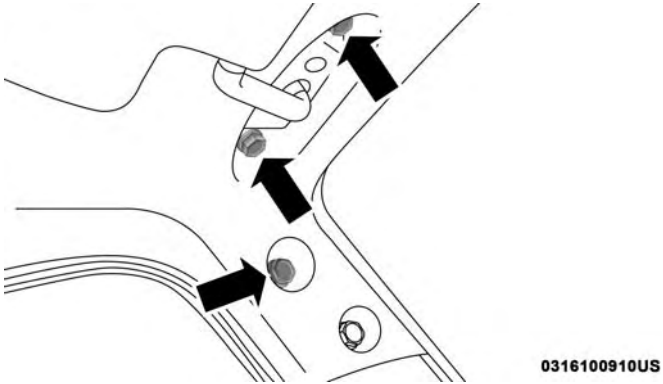

Step Two

3. Remove the sun visor.
4. Remove the A-pillar cap.
5. Disconnect microphone (if equipped with Uconnect phone).
6. Open the sport bar Velcro covering.
7. Remove the one hex bolt (13 mm) visible through the plastic trim on the bottom side of the side bar, one hex bolt (13 mm) on the side of the side bar, and one hex bolt (13 mm) on top of the side bar.

NOTE: Pull side bar out horizontally when removing.

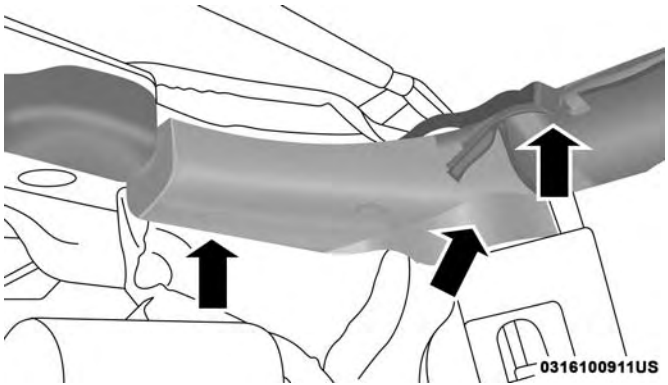

Step Seven

CAUTION!
Do not remove the head impact foam from the side bars, as damage to the foam may result.

NOTE: Store all of the mounting bolts in their original threaded holes and tighten for safekeeping.

8. Remove the side bar assembly, and reattach the sport bar Velcro covering.

9. To safely store the side bars in your vehicle, use four cinch straps (available from your authorized dealer). Attach the straps through the slots located on the floor behind the folded rear seat at the front of the storage bin cover.

WARNING!

You or others could be injured if you carry the side bars loose in your vehicle. Remove the side bars from the vehicle or securely store them as described or they may cause personal injury if an accident occurs. See your authorized dealer for the cinch straps.

10. Remove the windshield wiper arms by first pulling the wiper away from the windshield and out to the "lock" position. Unsnap the wiper arm nut caps, and remove the retaining nuts. Lift the wiper arms off and store them in the center console or securely behind the rear seat.

NOTE: It may be necessary to use a battery terminal puller tool in order to separate the wiper arms from the shaft after the nuts have been removed.

11. Remove the lower windshield plates by removing the six black round-headed Torx head screws (using a #40 Torx head driver) on each side of the base of the windshield.

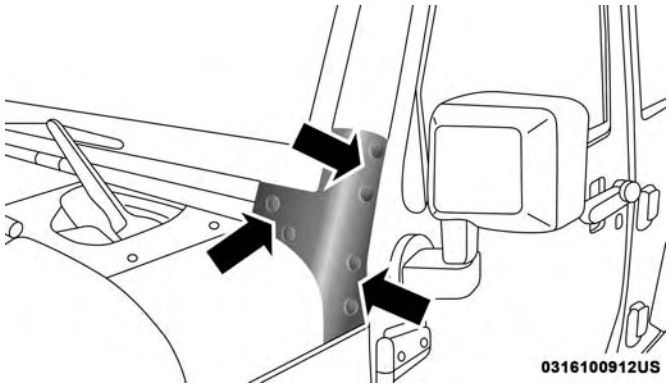

Step Eleven

12. Lower the windshield gently until it contacts the rubber hood bumpers.

13. Secure the windshield by passing a cinch strap through the footman hoop on the center of the hood and on the center of the windshield frame. Tighten the strap to secure the windshield in place.

Raising The Windshield And Replacing Side Bars

1. Raise the windshield.
2. Loosely attach the rear of the side bar to the sport bar. Refer to Step 4 of "Lowering Windshield And Removing Side Bars" earlier in this section.

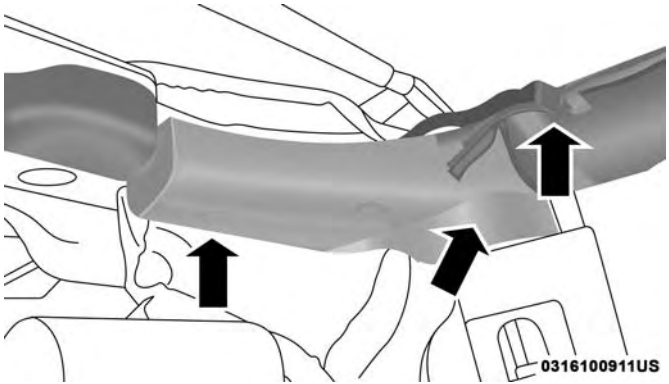

Step Two

3. Reattach the sport bar Velcro covering.
4. Attach the front of the side bar to the windshield frame.
5. Install the top two hex bolts (13 mm) first, then the lower side hex bolt (13 mm). The lower side bolt will not align until the top two bolts are installed.

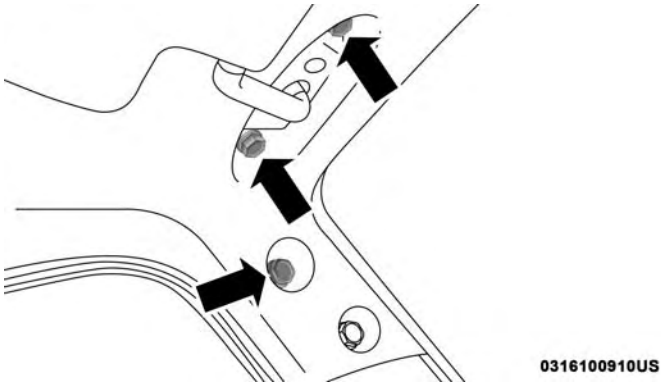

Step Five

6. Tighten all side bar attachment bolts.
7. Install the lower windshield plates with the six black round-headed Torx head screws (using a #40 Torx head driver) on each side of the base of the windshield.

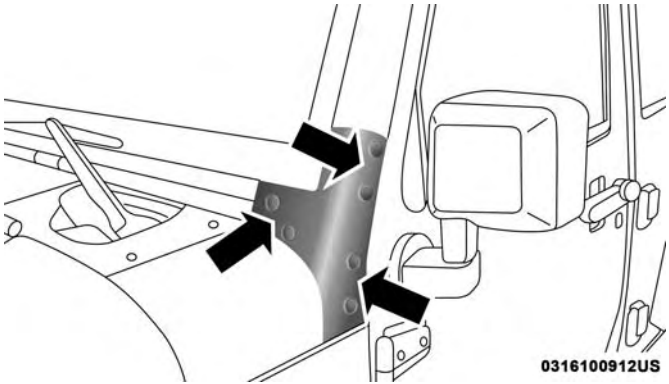

Step Seven

8. Reinstall the wiper arms.

HOOD

Opening The Hood

Release both the hood latches.

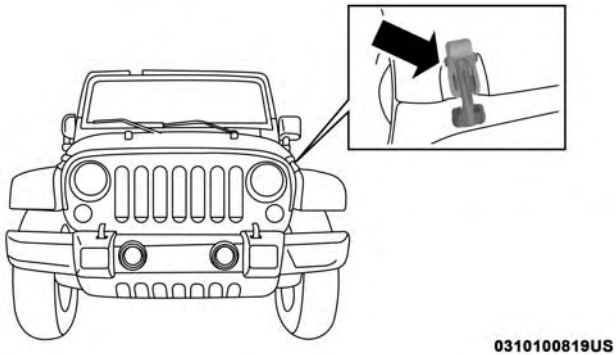

Hood Latch

Raise the hood and locate the safety latch, located in the middle of the hood opening. Push the safety latch to the left side of the vehicle, to open the hood. You may have to push down slightly on the hood before pushing the safety latch. Insert the support rod into the slot on the hood.

Closing The Hood

To close the hood, remove the support rod from the hood panel and place it in the retaining clip. Lower the hood slowly. Secure both of the hood latches.

WARNING!

Be sure the hood is fully latched before driving your vehicle. If the hood is not fully latched, it could open when the vehicle is in motion and block your vision. Failure to follow this warning could result in serious injury or death.

REAR SWING GATE

The rear swing gate can be unlocked by using the key, Remote Keyless Entry key fob, or by activating the power door lock switches located on the front doors.

To open the swing gate, push the button on the gate handle.

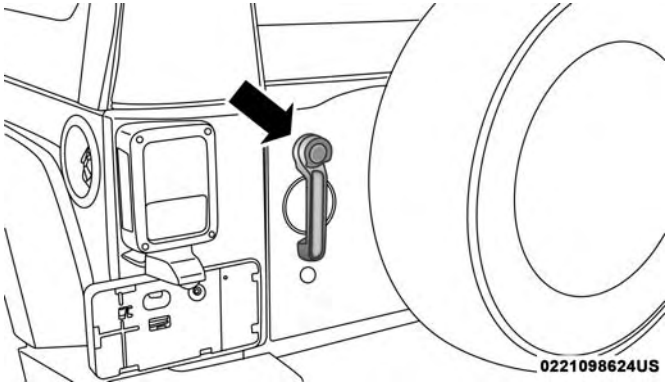

Swing Gate Handle

NOTE: Close the rear flip-up window before attempting to close the swing gate (hard top models only).

WARNING!

Driving with the flip-up window open can allow poisonous exhaust gases into your vehicle. You and your passengers could be injured by these fumes. Keep the flip-up window closed when you are operating the vehicle.

CAUTION!

Do not push on rear wiper blade when closing the rear flip-up window, as damage to the blade will result.

INTERNAL EQUIPMENT

Storage

Glove Compartment

The glove compartment is located on the passenger side of the instrument panel.

To open the glove compartment, pull the release handle.

Console Storage Compartment

To lock or unlock the storage compartment, insert the ignition key and turn. To open the storage compartment, push the latch and lift the cover.

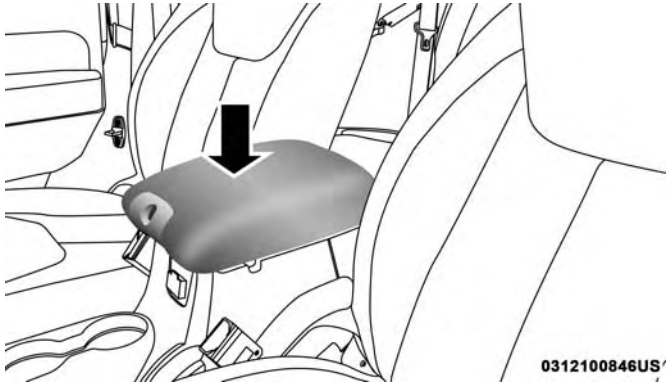

Center Console

There is an extra storage area underneath the console lid. The console lid has an integrated paper clip feature that can hold small items.

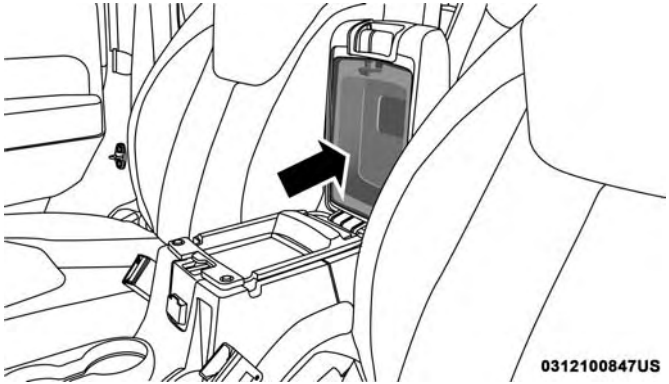

Center Console Lid Storage

Rear Storage Compartment — If Equipped

The rear cargo area storage compartment cover is held by a spring-loaded latch. In order to remove the rear storage compartment cover, use the following procedure:

NOTE: The rear storage compartment latch should not be used as cargo tie-down.

1. Flip up the pull loop so it is perpendicular (straight up) to the top surface of the tray.
2. Pull up on the loop and twist it 90 degrees, so it is parallel to the slotted hole in the tray.
3. Open the rear compartment cover.

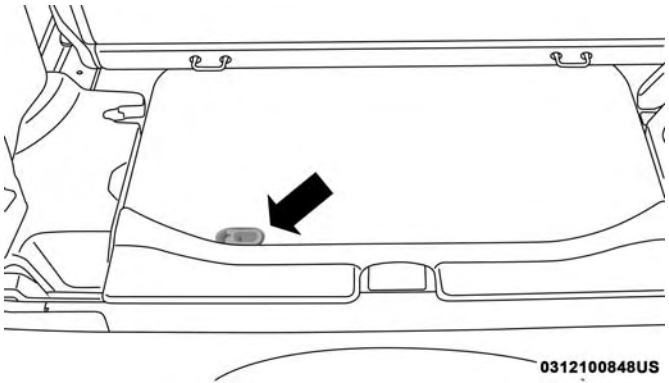

Rear Storage Cover

Cupholders

The front cupholders are located in the center console.

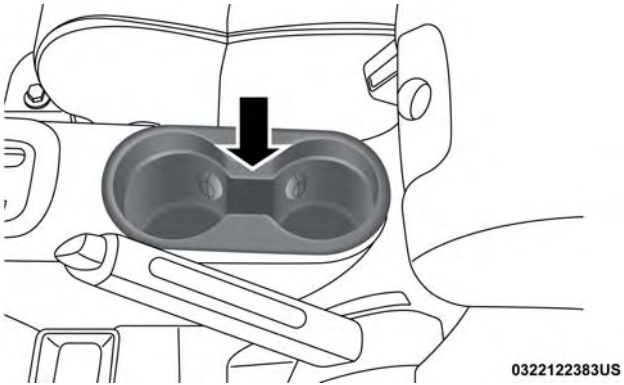

Front Cupholders

The rear cupholders are located on the back of the center console.

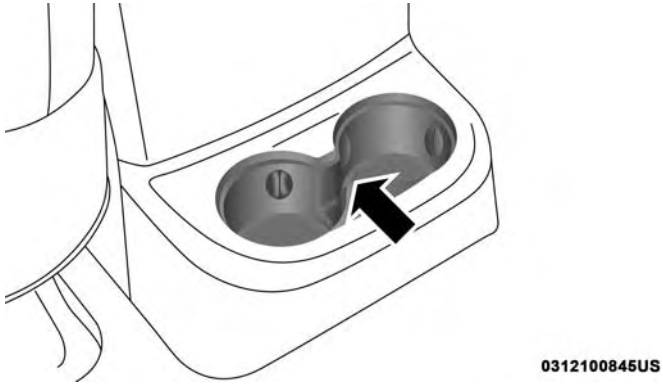

Rear Cupholders

Electrical Power Outlets

There are two 12 Volt (13 Amp) auxiliary power outlets that can provide power for accessories designed for use with the standard power outlet adapters.

The front power outlet is located in the center of the instrument panel below the climate controls, and is powered from the ignition switch. Power is available when the ignition switch is in the ON or ACC position.

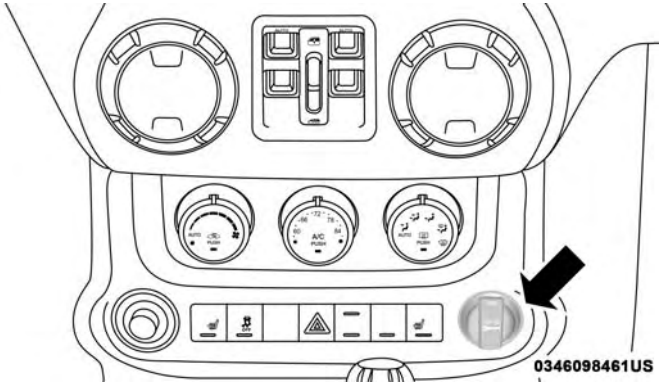

Front Power Outlet

When the optional cigar lighter heating element is used in the power outlet, it heats when pushed in and pops out automatically when ready for use. **To preserve the heating element, do not hold the lighter in the heating position.**

A second power outlet is located inside the center console and is powered directly from the vehicle battery.

CAUTION!

- **Do not exceed the maximum power of 160 Watts (13 Amps) at 12 Volts. If the 160 Watt (13 Amp) power rating is exceeded the fuse protecting the system will need to be replaced.**
- **Power outlets are designed for accessory plugs only. Do not insert any other object in the power outlets as this will damage the outlet and blow the fuse. Improper use of the power outlet can cause damage not covered by your New Vehicle Limited Warranty.**

On vehicles equipped with a rear subwoofer, there is a third power outlet located in the right rear cargo area.

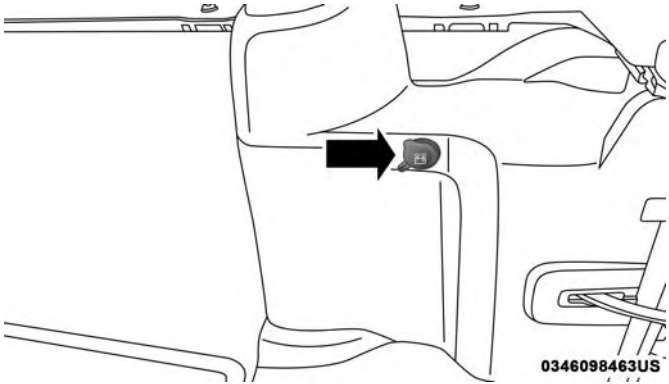

Rear Power Outlet — If Equipped

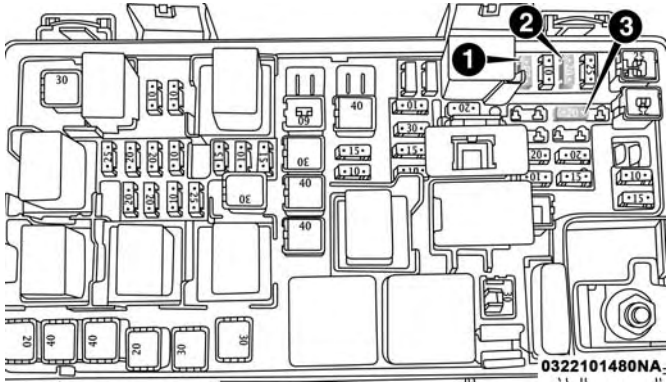

Power Outlet Fuse Locations

1 — M36 Fuse 20 A Yellow Power Outlet Console Bin
2 — M6 Fuse 20 A Yellow Cigar Lighter Instrument Panel
3 — M7 Fuse 20 A Yellow Power Outlet Rear With Sub Woofer (Opt.)

WARNING!

To avoid serious injury or death:
- **Do not insert any objects into the receptacles.**
- **Do not touch with wet hands.**
- **Close the lid when not in use.**

(Continued)

WARNING! *(Continued)*

- **If this outlet is mishandled, it may cause an electric shock and failure.**

CAUTION!

- **Many accessories that can be plugged in draw power from the vehicle's battery, even when not in use (i.e., cellular phones, etc.). Eventually, if plugged in long enough, the vehicle's battery will discharge sufficiently to degrade battery life and/or prevent the engine from starting.**
- **Accessories that draw higher power (i.e., coolers, vacuum cleaners, lights, etc.), will degrade the battery even more quickly. Only use these intermittently and with greater caution.**
- **After the use of high power draw accessories, or long periods of the vehicle not being started (with accessories still plugged in), the vehicle must be driven a sufficient length of time to allow the alternator to recharge the vehicle's battery.**
- **Power outlets are designed for accessory plugs only. Do not hang any type of accessory or accessory bracket from the plug. Improper use of the power outlet can cause damage.**

Power Inverter — If Equipped

There is a 115 Volt, 150 Watt inverter outlet located on the front of the center console to convert DC current to AC current. This outlet can power cellular phones, electronics and other low power devices requiring power up to 150 Watts. Certain high-end video game consoles will exceed this power limit, as will most power tools.

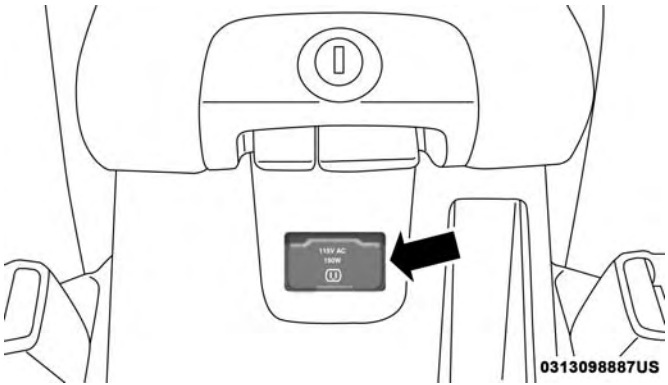

Power Inverter

The power inverter is designed with built-in overload protection. If the power rating of 150 Watts is exceeded, the power inverter will automatically shut down. Once the electrical device has been removed from the outlet, the inverter should automatically reset. If the power rating exceeds approximately 170 Watts, the power inverter may have to be reset manually. To reset the inverter manually, push the power inverter button to turn it off and then push it again to turn it back on. To avoid overloading the circuit, check the power ratings on electrical devices prior to using the inverter.

The power inverter button is located on the instrument panel below the climate controls. To turn on the power outlet, push the button once. The indicator light will illuminate. Push the button a second time to turn the power inverter outlet off.

NOTE: When the power inverter button is pushed, there will be a delay of approximately one second before the inverter indicator light turns on.

WARNING!

To avoid serious injury or death:
- **Do not insert any objects into the receptacles.**
- **Do not touch with wet hands.**
- **Close the lid when not in use.**
- **If this outlet is mishandled, it may cause an electric shock and failure.**

GETTING TO KNOW YOUR INSTRUMENT PANEL

CONTENTS

■ INSTRUMENT CLUSTER 178

□ Instrument Cluster Descriptions 179

■ INSTRUMENT CLUSTER DISPLAY — IF EQUIPPED. 181

□ Instrument Cluster Display Location And Controls 181

□ Instrument Cluster Display Messages. 183

□ Oil Change Required 184

□ Instrument Cluster Display Menu Items 184

■ WARNING LIGHTS AND MESSAGES 191

□ Red Telltale Lights 191

□ Yellow Telltale Lights 194

□ Green Telltale Lights. 198

□ White Telltale Lights. 198

□ Blue Telltale Lights. 199

■ ONBOARD DIAGNOSTIC SYSTEM — OBD II . . .199

□ Onboard Diagnostic System (OBD II) Cybersecurity 200

□ Loose Fuel Filler Cap Message 200

■ EMISSIONS INSPECTION AND MAINTENANCE PROGRAMS 201

INSTRUMENT CLUSTER

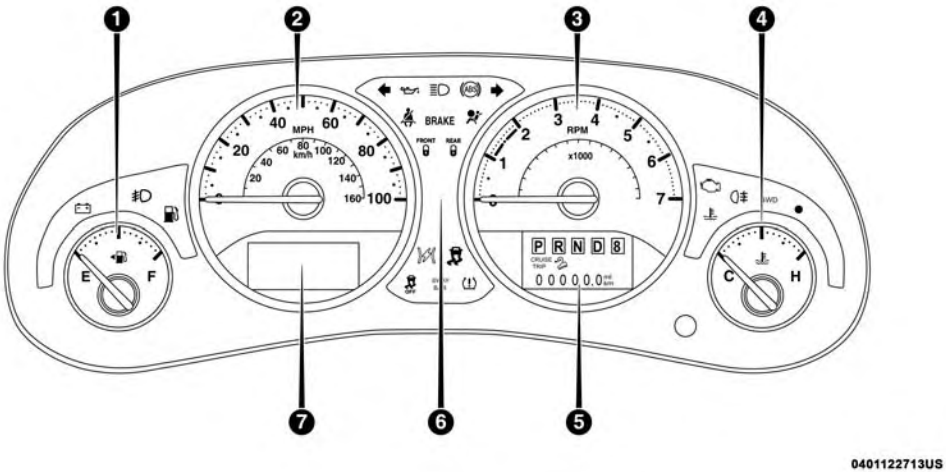

Instrument Cluster

Instrument Cluster Descriptions

1. **Fuel Gauge**
   - The pointer shows the level of fuel in the fuel tank when the ignition switch is in the ON/RUN position.
   - The fuel pump symbol points to the side of the vehicle where the fuel filler door is located.
2. **Speedometer**
   - Indicates vehicle speed.
3. **Tachometer**
   - Indicates the engine speed in revolutions per minute (RPM x 1000).

CAUTION!

Do not operate the engine with the tachometer pointer in the red area. Engine damage will occur.

4. **Temperature Gauge**
   - The temperature gauge shows engine coolant temperature. Any reading within the normal range indicates that the engine cooling system is operating satisfactorily.
   - The gauge pointer will likely indicate a higher temperature when driving in hot weather, up mountain grades, or when towing a trailer. It should not be allowed to exceed the upper limits of the normal operating range.

WARNING!

A hot engine cooling system is dangerous. You or others could be badly burned by steam or boiling coolant. You may want to call your authorized dealer for service if your vehicle overheats.

CAUTION!

Driving with a hot engine cooling system could damage your vehicle. If the temperature gauge reads "H" pull over and stop the vehicle. Idle the vehicle with the air conditioner turned off until the pointer drops back into the normal range. If the pointer remains on the "H", turn the engine off immediately and call your authorized dealer for service.

5. **Odometer / Trip Odometer Display Area**
   - The odometer display shows the total distance the vehicle has been driven. The trip odometer shows individual trip mileage. Refer to "Odometer/Trip Odometer/ECO (Fuel Saver Indicator) Button" for further information.
   - U.S. Federal regulations require that upon transfer of vehicle ownership, the seller certify to the purchaser the correct mileage that the vehicle has been driven. If your odometer needs to be repaired or serviced, the repair technician should leave the odometer reading the same as it was before the repair or service. If they cannot do so, then the odometer must be set at zero, and a sticker must be placed in the door jamb stating what the mileage was before the repair or service. It is a good idea for you to make a record of the odometer reading before the repair/service, so that you can be sure that it is properly reset, or that the door jamb sticker is accurate if the odometer must be reset at zero.

Vehicle Odometer Messages

All messages will display in the instrument cluster display, if equipped. Refer to "Instrument Cluster Display— If Equipped" in this section for further information.

When the appropriate conditions exist, the following odometer messages will display:

- ECO — Fuel Saver Indicator
- DOOR — Door Open
- GATE — Swing Gate Open
- LOW TIREE — Low Tire Pressure
- HOTOIL — Oil Temperature Above Normal Limits
- GASCAP — Fuel Cap Fault
- NOFUSE — Fuse Fault
- CHANGE OIL — Oil Change Required

6. **Telltales**
   - Hard and Soft Telltales (Symbols) appear based on specific behaviors.

7. **Instrument Cluster Display / Compass Mini-Trip Computer Display — If Equipped**
   - When the appropriate conditions exist, this display shows the instrument cluster display messages. Refer to "Instrument Cluster Display — If Equipped" in "Getting To Know Your Instrument Panel" for further information.
   - When the appropriate conditions exist, this display shows the Mini-Trip Computer messages.

INSTRUMENT CLUSTER DISPLAY — IF EQUIPPED

Your vehicle may be equipped with an instrument cluster display, which offers useful information to the driver. With the ignition in the STOP/OFF mode, opening/closing of a door will activate the display for viewing, and display the total miles, or kilometers, in the odometer. Your instrument cluster display is designed to display important information about your vehicle's systems and features. Using a driver interactive display located on the instrument panel, your instrument cluster display can show you how systems are working and give you warnings when they aren't. The steering wheel mounted controls allow you to scroll through and enter the main menus and submenus. You can access the specific information you want and make selections and adjustments.

Instrument Cluster Display Location And Controls

The instrument cluster display features a driver-interactive display that is located in the instrument cluster.

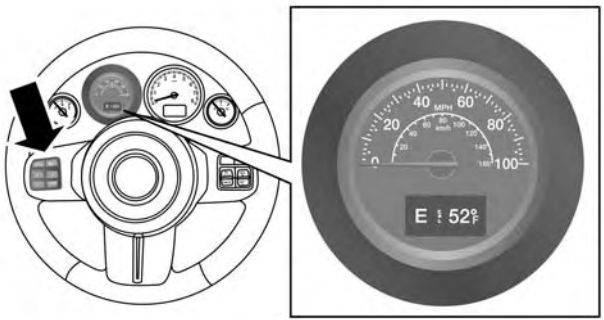

0403098839US

Instrument Cluster Display

This system conveniently allows the driver to select a variety of useful information by pushing the switches mounted on the steering wheel. The instrument cluster display consists of the following:

- Compass Heading (N, S, E, W, NE, NW, SE, SW)
- Outside Temperature (°F or °C)
- ECO Display

- Digital Speedometer
- Average Fuel Economy
- Distance To Empty
- Tire Pressure Monitor System — If Equipped
- Elapsed Time
- Vehicle Info
- Units Selection
- System Status and Warnings (Door Open, etc.)
- Personal Settings (Customer-Programmable Features)

The system allows the driver to select information by pushing the following buttons mounted on the steering wheel:

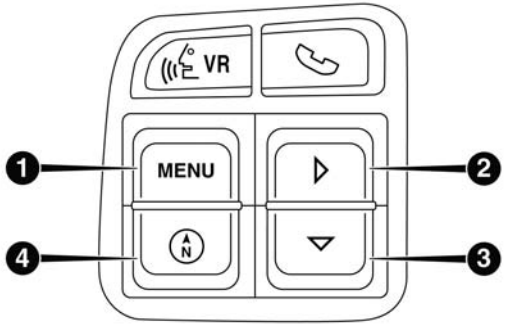

Instrument Cluster Display Control Buttons

1 — MENU Button	3 — Down Arrow Button
2 — Right Arrow Button	4 — Compass Button

- ***MENU Button***

Push and release the **MENU** button to advance the display to each of the instrument cluster display Main Menu features or to return to the Main Menu from a submenu. Upon reaching the last item in the Main Menu the instrument cluster display will advance to the first item in the Main Menu with the next **MENU** button push and release.

- *Compass Button*

Push and release the **compass** button to return to the Compass/Outside Temperature/Audio Information/ECO screen whenever the current display is not the Compass/Outside Temperature/Audio Information/ECO screen.

- *Right Arrow Button*

Push and release the **right** arrow button when prompted by the instrument cluster display to Reset Main Menu features with a reset capability or to change Personal Settings.

- *Down Arrow Button*

Push and release the **down** arrow button when prompted by the instrument cluster display to step through Vehicle Info submenu, stored system warning messages, or Personal Settings features.

Instrument Cluster Display Messages

When the appropriate conditions exist, the instrument cluster will display the following messages:

- Low Tire Pressure
- Low Fuel
- Service TPM System (refer to "Tire Pressure Monitoring System" in "Safety" for further information)
- Damaged Key
- Key in Ignition
- Turn Signal On (with a continuous warning chime)
- Left Front Turn Signal Lamp Out (with a single chime)
- Left Rear Turn Signal Lamp Out (with a single chime)
- Right Front Turn Signal Lamp Out (with a single chime)
- Right Rear Turn Signal Lamp Out (with a single chime)
- Key Fob Battery Low (with a single chime)
- Personal Settings Not Avail. – Vehicle Not in Park — automatic transmission
- Personal Settings Not Avail. – Vehicle in Motion — manual transmission
- Door Open (with vehicle graphic showing which door is open. A single chime sounds if the vehicle is in motion).
- Gate Open (with vehicle graphic showing the Liftgate/back door open and a single chime sounds if the vehicle is in motion)

- Check Gascap (refer to "Refueling The Vehicle" in "Starting And Operating" for further information)
- Oil Change Required (with a single chime)
- ECO (Fuel Saver Indicator) — if equipped

Oil Change Required

Your vehicle is equipped with an engine oil change indicator system. The "Oil Change Required" message will display in the instrument cluster display for approximately 10 seconds after a single chime has sounded to indicate the next scheduled oil change interval. The engine oil change indicator system is duty cycle based, which means the engine oil change interval may fluctuate dependent upon your personal driving style.

Unless reset, this message will continue to display each time you turn the ignition switch to the ON position. To turn off the message temporarily, push and release the **MENU** button. To reset the oil change indicator system (after performing the scheduled maintenance), perform the following procedure:

1. Turn the ignition switch to the ON position. **Do not start the engine**.
2. Fully push the accelerator pedal slowly three times within 10 seconds.
3. Turn the ignition switch to the LOCK position.

NOTE: If the indicator message illuminates when you start the vehicle, the oil change indicator system did not reset. If necessary, repeat this procedure.

Instrument Cluster Display Menu Items

NOTE: The instrument cluster display menu items display in the center of the instrument cluster. Menu items may vary depending on your vehicle features.

Compass, Outside Temperature Display / ECO (Fuel Saver Mode) — If Equipped

The compass readings indicate the direction the vehicle is facing. Push and release the **compass** button to display one of eight compass headings, the outside temperature/ECO if the instrument cluster display is not already displaying this screen.

NOTE: The system will display the last known outside temperature when starting the vehicle and may need to be driven several minutes before the updated temperature is displayed. Engine temperature can also affect the displayed temperature; therefore, temperature readings are not updated when the vehicle is not moving.

ECO (Fuel Saver Mode) — If Equipped

The ECO message will display below the outside temperature in the instrument cluster display (if the audio system is on the ECO indicator will override the audio information display line if the "Display Fuel Saver" personal setting is ON — see "Personal Settings" section). This message will appear whenever you are driving in a fuel efficient manner.

This feature allows you to monitor when you are driving in a fuel efficient manner, and it can be used to modify driving habits in order to increase fuel economy.

Automatic Compass Calibration

This compass is self-calibrating, which eliminates the need to set the compass manually. When the vehicle is new, the compass may appear erratic, and the instrument cluster display will display "CAL" until the compass is calibrated. You may also calibrate the compass by completing one or more 360–degree turns (in an area free from large metal or metallic objects) until the "CAL" message displayed in the instrument cluster display turns off. The compass will now function normally.

NOTE: A good calibration requires a level surface and an environment free from large metallic objects such as buildings, bridges, underground cables, railroad tracks, etc.

Manual Compass Calibration

If the compass appears erratic and the "CAL" indicator does not appear in the instrument cluster display, you must put the compass into the Calibration Mode manually as follows:

1. Start the engine. Leave the gear selector in PARK in order to enter the instrument cluster display Programming Menus.
2. Push the **MENU** button until Personal Settings (Customer-Programmable Features) displays in the instrument cluster display.
3. Push the **down** arrow button until "Calibrate Compass" displays in the instrument cluster display.
4. Push and release the **right** arrow button to start the calibration. The "CAL" indicator will display in the instrument cluster display.

5. Complete one or more 360–degree turns (in an area free from large metal or metallic objects) until the "CAL" indicator turns off. The compass will now function normally.

Compass Variance

Compass Variance is the difference between Magnetic North and Geographic North. To compensate for the differences, the variance should be set for the zone where the vehicle is driven, per the zone map. Once properly set, the compass will automatically compensate for the differences and provide the most accurate compass heading.

NOTE: Magnetic materials should be kept away from the top of the instrument panel; this is where the compass sensor is located.

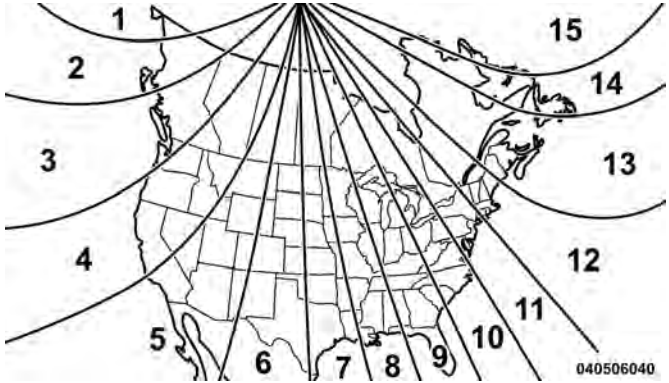

Compass Variance Map

To Change The Compass Variance:

1. Turn the ignition switch RUN (it is not necessary to start the engine).
2. Push the **MENU** button until Personal Settings (Customer-Programmable Features) displays in the instrument cluster display.
3. Push the **down** arrow button until "Compass Variance" message and the last variance zone number displays in the instrument cluster display.

4. Push and release the **right** arrow button until the proper variance zone is selected according to the map.
5. Push and release the **COMPASS** button to exit.

Digital Speedometer

Shows the actual vehicle speed in mph or km/h.

Average Fuel Economy

Shows the average fuel economy since the last reset. Average fuel economy can be reset by pushing and holding the **right** arrow button (as prompted in the instrument cluster display). Upon reset, the history information will be erased, and the averaging will continue from the last fuel average reading before the reset.

Distance To Empty (DTE)

Shows the estimated distance that can be traveled with the fuel remaining in the tank. This estimated distance is determined by a weighted average of the instantaneous and average fuel economy, according to the current fuel tank level. DTE cannot be reset.

NOTE: Significant changes in driving style or vehicle loading will greatly affect the actual drivable distance of the vehicle, regardless of the DTE display value.

When the DTE value is less than 30 miles (48 km) estimated driving distance, the DTE display will change to a text display of "LOW FUEL." This display will continue until the vehicle runs out of fuel. Adding a significant amount of fuel to the vehicle will turn off the LOW FUEL text, and a new DTE value will display.

Tire Pressure — If Equipped

Push and release the **MENU** button until "Tire PSI/kpa:" displays in the instrument cluster display. It shows a graphic of the vehicle with a tire pressure value at each corner of the graphic.

Elapsed Time

Shows the total elapsed time of travel since the last reset. Elapsed time will increment when the ignition switch is in the RUN or START position.

Elapsed time displays Minutes: Seconds.

After 59 minutes: 59 seconds have elapsed, Hours will be displayed before Minutes.

Elapsed time can be reset by pushing and holding the **right** arrow button (as prompted in the instrument cluster display). Upon reset, all digits will change to zeros and time will start again if the ignition switch is in RUN or START.

Vehicle Information

Push and release the **MENU** button until "Vehicle Information" displays in the instrument cluster display. Then, push the **down** arrow button to display any one of the following choices:

- *Coolant Temperature*

Shows the actual coolant temperature.

- *Oil Pressure*

Shows the actual oil pressure.

- *Transmission Temperature — Automatic Transmission Only*

Shows the actual transmission fluid temperature.

- *Oil Life Remaining (Automatic Oil Change Indicator) — If Equipped*

Shows the oil life measured in percentage.

Units Selection (UNITS IN Display)

Displays the units used for the Outside Temperature, Average Fuel Economy and Distance to Empty features. Push and release the **down** arrow button to toggle units between "U.S." and "METRIC."

System Warnings

Displays "SYSTEM OK" if there are no active Warning Messages stored. Pushing and releasing the **down** arrow button when "SYSTEM OK" is displayed will do nothing. Displays "SYSTEM WARNINGS PRESENT" if there are active Warning Messages stored. Pushing and releasing the **down** arrow button when "SYSTEM WARNINGS PRESENT" is displayed will display each stored warning for each button push. Push and release the **MENU** button to return to the Main Menu.

Personal Settings (Customer-Programmable Features)

Personal Settings allows the driver to set and recall features when the vehicle speed is at 0 mph (0 km/h) (manual transmission) or when the gear selector is in PARK (auto transmission).

Push and release the **MENU** button until Personal Settings displays in the instrument cluster display.

Use the **down** arrow button to display one of the following choices:

Language

When in this display you may select one of five languages for all display nomenclature, including the trip functions

and the navigation system (if equipped). Push the **right** arrow button while in this display to select English, Espanol or Francais. Then, as you continue, the information will display in the selected language.

Auto Lock Doors — If Equipped

When this feature is selected, all doors will lock automatically when the vehicle reaches a speed of 15 mph (24 km/h). The auto door lock feature can be enabled or disabled, to make your selection, push and release the **right** arrow button until "On" or "Off" appears.

Auto Unlock On Exit

When ON is selected, all doors will unlock when the vehicle is stopped and the transmission is in the PARK or NEUTRAL position, and the driver's door is opened. To make your selection, push and release the **right** arrow button until "On" or "Off" appears.

Key Fob Unlock — If Equipped

When "Driver Door 1st Press" is selected, only the driver's door will unlock on the first push of the key fob unlock button. When "Driver Door 1st Press" is selected, you must push the key fob unlock button twice to unlock the passenger's doors. When "All Doors 1st Press" is selected, all of the doors will unlock on the first push of the key fob unlock button. To make your selection, push and release the **right** arrow button until "Driver Door 1st Press" or "All Doors 1st Press" appears.

Sound Horn With Lock

When on is selected, a short horn sound will occur when the key fob lock button is pushed. This feature may be selected with or without the Flash Lamp with Lock feature. To make your selection, push and release the **right** arrow button until "On" or "Off" appears.

Flash Lamp With Lock

When on is selected, the front and rear turn signals will flash when the doors are locked or unlocked with the key fob. This feature may be selected with or without the Sound Horn with Lock feature selected. To make your selection, push and release the **right** arrow button until "On" or "Off" appears.

Headlamp Off Delay

When this feature is selected, the driver can choose to have the headlights remain on for 0, 30, 60, or 90 seconds when exiting the vehicle. To make your selection, push and release the **right** arrow button until "0," "30," "60," or "90" appears.

Headlamps With Wipers (Available With Auto Headlights Only)

When on is selected, and the headlight switch is in the AUTO position, the headlights will turn on approximately 10 seconds after the wipers are turned on. If the headlights were turned on by this feature, they will also turn off when the wipers are turned off. To make your selection, push and release the **right** arrow button until "ON" or "OFF" appears.

NOTE: Turning the headlights on during the daytime causes the instrument panel lights to dim. To increase the brightness, refer to "Exterior Lights" in "Getting To Know Your Vehicle."

Key Off Power Delay

When this feature is selected, the power window switches, radio, hands–free system (if equipped), DVD video system (if equipped), power sunroof (if equipped), and power outlets will remain active for up to 10 minutes after the ignition switch is turned to the LOCK position. Opening either front vehicle door will cancel this feature. To make your selection, push and release the **right** arrow button until "Off," "45 sec.," "5 min.," or "10 min." appears.

Illumin. Approach

When this feature is selected, the headlights will activate and remain on for up to 90 seconds when the doors are unlocked with the key fob. To make your selection, push and hold the **right** arrow button until "Off," "30 sec," "60 sec," or "90 sec" appears.

Hill Start Assist (HSA) — If Equipped

When "On" is selected, the HSA system is active. Refer to "Electronic Brake Control System" in "Safety" for system function and operating information. To make your selection, push and release the **right** arrow button until "On" or "Off" appears.

Display Units In

The instrument cluster display can be changed between English and Metric units of measure. The units apply to the Outside Temperature, Average Fuel Economy, and Distance to Empty. To make your selection, push and release the **right** arrow button until "U.S." or "METRIC" appears.

Nav–Turn By Turn — If Equipped

When on enables display of Navigation System street name, turn direction, and distance to turn information in

the instrument cluster display. To make your selection, push and release the **right** arrow button until "On" or "Off" appears.

Display Fuel Saver — If Equipped

The "ECO" message is located in the compass/outside temperature/audio information/ECO display. If Display Fuel Saver is selected as ON, only the ECO message will display in the audio information/ECO line of the display. If Display Fuel Saver is selected as OFF, only the audio information will display in the audio information/ECO line of the display when the audio system is on. To make your selection, push and release the **right** arrow button until "ON" or "OFF" appears.

Compass Variance

Refer to "Instrument Cluster Display" in "Getting To Know Your Instrument Panel" for further information.

Calibrate Compass

Push the **right** arrow button to calibrate the compass.

WARNING LIGHTS AND MESSAGES

Red Telltale Lights

— Air Bag Warning Light

This light indicates a fault with the airbag, and will turn on for four to eight seconds as a bulb check when the ignition is placed in the ON/RUN or ACC/ON/RUN position. This light will illuminate with a single chime when a fault with the Air Bag Warning Light has been detected, it will stay on until the fault is cleared. If the light is either not on during startup, stays on, or turns on while driving, have the system inspected at an authorized dealer as soon as possible.

BRAKE — Brake Warning Light

This light monitors various brake functions, including brake fluid level and parking brake application. If the brake light turns on it may indicate that the parking brake is applied, that the brake fluid level is low, or that there is a problem with the anti-lock brake system reservoir.

If the light remains on when the parking brake has been disengaged, and the fluid level is at the full mark on the master cylinder reservoir, it indicates a possible brake hydraulic system malfunction or that a problem with the Brake Booster has been detected by the Anti-Lock Brake

System (ABS) / Electronic Stability Control (ESC) system. In this case, the light will remain on until the condition has been corrected. If the problem is related to the brake booster, the ABS pump will run when applying the brake, and a brake pedal pulsation may be felt during each stop.

The dual brake system provides a reserve braking capacity in the event of a failure to a portion of the hydraulic system. A leak in either half of the dual brake system is indicated by the Brake Warning Light, which will turn on when the brake fluid level in the master cylinder has dropped below a specified level.

The light will remain on until the cause is corrected.

NOTE: The light may flash momentarily during sharp cornering maneuvers, which change fluid level conditions. The vehicle should have service performed, and the brake fluid level checked.

If brake failure is indicated, immediate repair is necessary.

WARNING!

Driving a vehicle with the red brake light on is dangerous. Part of the brake system may have failed. It will take longer to stop the vehicle. You could have a collision. Have the vehicle checked immediately.

Vehicles equipped with the Anti-Lock Brake System (ABS) are also equipped with Electronic Brake Force Distribution (EBD). In the event of an EBD failure, the Brake Warning Light will turn on along with the ABS Light. Immediate repair to the ABS system is required.

Operation of the Brake Warning Light can be checked by turning the ignition switch from the OFF position to the ON/RUN position. The light should illuminate for approximately two seconds. The light should then turn off unless the parking brake is applied or a brake fault is detected. If the light does not illuminate, have the light inspected by your authorized dealer.

The light also will turn on when the parking brake is applied with the ignition switch in the ON/RUN position.

NOTE: This light shows only that the parking brake is applied. It does not show the degree of brake application.

— Battery Charge Warning Light

This light illuminates when the battery is not charging properly. If it stays on while the engine is running, there may be a malfunction with the charging system. Contact your authorized dealer as soon as possible.

This indicates a possible problem with the electrical system or a related component.

— Coolant Temperature Warning Light

This light warns of an overheated engine condition. If the light turns on while driving, safely pull over and stop the vehicle. If the A/C system is on, turn it off. Also, shift the transmission into NEUTRAL and idle the vehicle. If the temperature reading does not return to normal, turn the engine off immediately and call for service.

NOTE: As the coolant temperature gauge approaches "H," this indicator will illuminate and a single chime will sound. Further overheating will cause the temperature gauge to pass "H." In this case, a continuous chime will sound until the engine is allowed to cool or the 4 minute duration is expired, whichever comes first.

— Electronic Throttle Control (ETC) Warning Light

This light informs you of a problem with the Electronic Throttle Control (ETC) system. If a problem is detected while the vehicle is running, the light will either stay on or flash depending on the nature of the problem. Cycle the ignition when the vehicle is safely and completely stopped and the transmission is placed in the PARK position. The light should turn off. If the light remains on with the vehicle running, your vehicle will usually be drivable; however, see an authorized dealer for service as soon as possible.

NOTE: This light may turn on if the accelerator and brake pedals are pressed at the same time.

If the light continues to flash when the vehicle is running, immediate service is required and you may experience reduced performance, an elevated/rough idle, or engine stall and your vehicle may require towing. The light will come on when the ignition is placed in the ON/RUN or ACC/ON/RUN position and remain on briefly as a bulb check. If the light does not come on during starting, have the system checked by an authorized dealer.

— Oil Pressure Warning Light

This light indicates low engine oil pressure. If the light turns on while driving, stop the vehicle and shut off the engine as soon as possible. A chime will sound when this light turns on.

Do not operate the vehicle until the cause is corrected. This light does not indicate how much oil is in the engine. The engine oil level must be checked under the hood.

— Seat Belt Reminder Warning Light

This light indicates when the driver or passenger seat belt is unbuckled. When the ignition is first placed in the ON/RUN or ACC/ON/RUN position, if the driver's seat belt is unbuckled, a chime will sound and the light will turn on. When driving, if the driver or front passenger seat belt remains unbuckled, the Seat Belt Reminder Light will flash or remain on continuously and a chime will sound. Refer to "Occupant Restraints Systems" in "Safety" for further information.

— Vehicle Security Warning Light — If Equipped

This light will flash at a fast rate for approximately 15 seconds when the vehicle security alarm is arming, and then will flash slowly until the vehicle is disarmed.

Yellow Telltale Lights

— Low Fuel Warning Light

When the fuel level reaches approximately 2.8 gal (10.6 L), this light will turn on and a chime will sound. The light will remain on until fuel is added.

— Anti-Lock Brake (ABS) Warning Light

This light monitors the Anti-Lock Brake System (ABS). The light will turn on when the ignition is placed in the ON/RUN or ACC/ON/RUN position and may stay on for as long as four seconds.

If the ABS light remains on or turns on while driving, then the Anti-Lock portion of the brake system is not functioning and service is required as soon as possible. However, the conventional brake system will continue to operate normally, assuming the Brake Warning Light is not also on.

If the ABS light does not turn on when the ignition is placed in the ON/RUN or ACC/ON/RUN position, have the brake system inspected by an authorized dealer.

— Engine Check/Malfunction Indicator Warning Light (MIL)

The Engine Check/Malfunction Indicator Light (MIL) is a part of an Onboard Diagnostic System called OBD II that monitors engine and automatic transmission control systems. The light will illuminate when the ignition is in the ON/RUN position before engine start. If the bulb does not come on when turning the ignition switch from OFF to ON/RUN, have the condition checked promptly.

Certain conditions, such as a loose or missing gas cap, poor quality fuel, etc., may illuminate the light after engine start. The vehicle should be serviced if the light stays on through several typical driving styles. In most situations, the vehicle will drive normally and will not require towing.

When the engine is running, the MIL may flash to alert serious conditions that could lead to immediate loss of power or severe catalytic converter damage. The vehicle should be serviced as soon as possible if this occurs.

WARNING!

A malfunctioning catalytic converter, as referenced above, can reach higher temperatures than in normal

(Continued)

WARNING! *(Continued)*

operating conditions. This can cause a fire if you drive slowly or park over flammable substances such as dry plants, wood, cardboard, etc. This could result in death or serious injury to the driver, occupants or others.

CAUTION!

Prolonged driving with the Malfunction Indicator Light (MIL) on could cause damage to the vehicle control system. It also could affect fuel economy and driveability. If the MIL is flashing, severe catalytic converter damage and power loss will soon occur. Immediate service is required.

— Tire Pressure Monitoring System (TPMS) Warning Light

The warning light switches on and a message is displayed to indicate that the tire pressure is lower than the recommended value and/or that slow pressure loss is occurring. In these cases, optimal tire duration and fuel consumption may not be guaranteed.

Should one or more tires be in the condition mentioned above, the display will show the indications corresponding to each tire in sequence.

CAUTION!

Do not continue driving with one or more flat tires as handling may be compromised. Stop the vehicle, avoiding sharp braking and steering. If a tire puncture occurs, repair immediately using the dedicated tire repair kit and contact your authorized dealer as soon as possible.

Each tire, including the spare (if provided), should be checked monthly when cold and inflated to the inflation pressure recommended by the vehicle manufacturer on the vehicle placard or tire inflation pressure label. (If your vehicle has tires of a different size than the size indicated on the vehicle placard or tire inflation pressure label, you should determine the proper tire inflation pressure for those tires.)

As an added safety feature, your vehicle has been equipped with a tire pressure monitoring system (TPMS) that illuminates a low tire pressure telltale when one or more of your tires is significantly under-inflated. Accordingly, when the low tire pressure telltale illuminates, you should stop and check your tires as soon as possible, and inflate them to the proper pressure. Driving on a significantly under-inflated tire causes the tire to overheat and can lead to tire failure. Under-inflation also reduces fuel efficiency and tire tread life, and may affect the vehicle's handling and stopping ability.

Please note that the TPMS is not a substitute for proper tire maintenance, and it is the driver's responsibility to maintain correct tire pressure, even if under-inflation has not reached the level to trigger illumination of the TPMS low tire pressure telltale.

Your vehicle has also been equipped with a TPMS malfunction indicator to indicate when the system is not operating properly. The TPMS malfunction indicator is combined with the low tire pressure telltale. When the system detects a malfunction, the telltale will flash for approximately one minute and then remain continuously illuminated. This sequence will continue upon subsequent vehicle start-ups as long as the malfunction exists. When the malfunction indicator is illuminated, the system may not be able to detect or signal low tire pressure as intended. TPMS malfunctions may occur for a variety of reasons, including

the installation of replacement or alternate tires or wheels on the vehicle that prevent the TPMS from functioning properly. Always check the TPMS malfunction telltale after replacing one or more tires or wheels on your vehicle to ensure that the replacement or alternate tires and wheels allow the TPMS to continue to function properly.

CAUTION!

The TPMS has been optimized for the original equipment tires and wheels. TPMS pressures and warning have been established for the tire size equipped on your vehicle. Undesirable system operation or sensor damage may result when using replacement equipment that is not of the same size, type, and/or style. Aftermarket wheels can cause sensor damage. Using aftermarket tire sealants may cause the Tire Pressure Monitoring System (TPMS) sensor to become inoperable. After using an aftermarket tire sealant it is recommended that you take your vehicle to your authorized dealer to have your sensor function checked.

— Electronic Stability Control (ESC) Active Warning Light — If Equipped

This light will indicate when the Electronic Stability Control system is Active. The "ESC Indicator Light" in the instrument cluster will come on when the ignition is placed in the ON/RUN or ACC/ON/RUN position, and when ESC is activated. It should go out with the engine running. If the "ESC Indicator Light" comes on continuously with the engine running, a malfunction has been detected in the ESC system. If this light remains on after several ignition cycles, and the vehicle has been driven several miles (kilometers) at speeds greater than 30 mph (48 km/h), see your authorized dealer as soon as possible to have the problem diagnosed and corrected.

- The "ESC Off Indicator Light" and the "ESC Indicator Light" come on momentarily each time the ignition is placed in the ON/RUN or ACC/ON/RUN position.
- The ESC system will make buzzing or clicking sounds when it is active. This is normal; the sounds will stop when ESC becomes inactive.
- This light will come on when the vehicle is in an ESC event.

— Electronic Stability Control (ESC) Off Warning Light — If Equipped

This light indicates the Electronic Stability Control (ESC) is off.

Each time the ignition is turned to ON/RUN or ACC/ON/RUN, the ESC system will be on, even if it was turned off previously.

FRONT — Front Axle Lock Indicator Light — If Equipped

Indicates when the front axle lock has been activated.

REAR — Rear Axle Lock Indicator Light — If Equipped

This light indicates when the rear axle lock has been activated.

4WD — 4WD Indicator Light — If Equipped

This light alerts the driver that the vehicle is in the four-wheel drive mode, and the front and rear driveshafts are mechanically locked together forcing the front and rear wheels to rotate at the same speed.

SWAY BAR — Sway Bar Indicator Light — If Equipped

This indicator will illuminate when the front sway bar is disconnected.

Green Telltale Lights

— Front Fog Indicator Light — If Equipped

This indicator will illuminate when the front fog lights are on.

— Turn Signal Indicator Lights

When the left or right turn signal is activated, the turn signal indicator will flash independently and the corresponding exterior turn signal lamps will flash. Turn signals can be activated when the multifunction lever is moved down (left) or up (right).

NOTE:

- A continuous chime will sound if the vehicle is driven more than 1 mile (1.6 km) with either turn signal on.
- Check for an inoperative outside light bulb if either indicator flashes at a rapid rate.

White Telltale Lights

CRUISE — Cruise Indicator

This indicator shows that the Speed Control System is ON.

— Hill Descent Control (HDC) Indicator Light — If Equipped

This indicator shows when the Hill Descent Control (HDC) feature is turned on. The lamp will be on solid when HDC is armed. HDC can only be armed when the transfer case is in the "4WD LOW" position and the vehicle speed is less then 30 mph (48 km/h). If these conditions are not met while attempting to use the HDC feature, the HDC indicator light will flash on/off.

Blue Telltale Lights

— High Beam Indicator Light

This indicator shows that the high beam headlights are on. With the low beams activated, push the multifunction lever forward (toward the front of the vehicle) to turn on the high beams. Pull the multifunction lever rearward (toward the rear of the vehicle) to turn off the high beams. If the high beams are off, pull the lever toward you for a temporary high beam on, "flash to pass" scenario.

ONBOARD DIAGNOSTIC SYSTEM — OBD II

Your vehicle is equipped with a sophisticated Onboard Diagnostic system called OBD II. This system monitors the performance of the emissions, engine, and automatic transmission control systems. When these systems are operating properly, your vehicle will provide excellent performance and fuel economy, as well as engine emissions well within current government regulations.

If any of these systems require service, the OBD II system will turn on the Malfunction Indicator Light (MIL). It will also store diagnostic codes and other information to assist your service technician in making repairs. Although your vehicle will usually be drivable and not need towing, see your authorized dealer for service as soon as possible.

CAUTION!

- **Prolonged driving with the MIL on could cause further damage to the emission control system. It could also affect fuel economy and driveability. The vehicle must be serviced before any emissions tests can be performed.**

(Continued)

CAUTION! *(Continued)*

- **If the MIL is flashing while the vehicle is running, severe catalytic converter damage and power loss will soon occur. Immediate service is required.**

Onboard Diagnostic System (OBD II) Cybersecurity

Your vehicle is required to have an Onboard Diagnostic system (OBD II) and a connection port to allow access to information related to the performance of your emissions controls. Authorized service technicians may need to access this information to assist with the diagnosis and service of your vehicle and emissions system.

WARNING!

- **ONLY an authorized service technician should connect equipment to the OBD II connection port in order to diagnose or service your vehicle.**
- **If unauthorized equipment is connected to the OBD II connection port, such as a driver-behavior tracking device, it may:**
  - **Be possible that vehicle systems, including safety related systems, could be impaired or a loss of**

(Continued)

WARNING! *(Continued)*

vehicle control could occur that may result in an accident involving serious injury or death.
- **Access, or allow others to access, information stored in your vehicle systems, including personal information.**

For further information, refer to “Cybersecurity” in “Multimedia”.

Loose Fuel Filler Cap Message

After fuel is added, the vehicle diagnostic system can determine if the fuel filler cap is possibly loose, improperly installed, or damaged. A “gASCAP” message will be displayed in the odometer. Tighten the gas cap until a ″clicking″ sound is heard. This is an indication that the gas cap is properly tightened. Push the odometer reset button to turn the message off. If the problem persists, the message will appear the next time the vehicle is started. This might indicate a damaged cap. If the problem is detected twice in a row, the system will turn on the MIL. Resolving the problem will turn the MIL off.

EMISSIONS INSPECTION AND MAINTENANCE PROGRAMS

In some localities, it may be a legal requirement to pass an inspection of your vehicle's emissions control system. Failure to pass could prevent vehicle registration.

For states that require an Inspection and Maintenance (I/M), this check verifies the "Malfunction Indicator Light (MIL)" is functioning and is not on when the engine is running, and that the OBD II system is ready for testing.

Normally, the OBD II system will be ready. The OBD II system may **not** be ready if your vehicle was recently serviced, recently had a dead battery or a battery replacement. If the OBD II system should be determined not ready for the I/M test, your vehicle may fail the test.

Your vehicle has a simple ignition actuated test, which you can use prior to going to the test station. To check if your vehicle's OBD II system is ready, you must do the following:

1. Cycle the ignition switch to the ON position, but do not crank or start the engine.

NOTE: If you crank or start the engine, you will have to start this test over.

2. As soon as you cycle the ignition switch to the ON position, you will see the "Malfunction Indicator Light (MIL)" symbol come on as part of a normal bulb check.
3. Approximately 15 seconds later, one of two things will happen:

- The MIL will flash for about ten seconds and then return to being fully illuminated until you turn OFF the ignition or start the engine. This means that your vehicle's OBD II system is **not ready** and you should **not** proceed to the I/M station.
- The MIL will not flash at all and will remain fully illuminated until you place the ignition in the off position or start the engine. This means that your vehicle's OBD II system is **ready** and you can proceed to the I/M station.

If your OBD II system is **not ready,** you should see your authorized dealer or repair facility. If your vehicle was recently serviced or had a battery failure or replacement, you may need to do nothing more than drive your vehicle as you normally would in order for your OBD II system to update. A recheck with the above test routine may then indicate that the system is **now ready**.

Regardless of whether your vehicle's OBD II system is ready or not, if the MIL is illuminated during normal vehicle operation you should have your vehicle serviced before going to the I/M station. The I/M station can fail your vehicle because the MIL is on with the engine running.

SAFETY

CONTENTS

■ SAFETY FEATURES 204
- □ Anti-Lock Brake System (ABS) 204
- □ Electronic Brake Control System 205

■ AUXILIARY DRIVING SYSTEMS 217
- □ Tire Pressure Monitor System (TPMS) 217

■ OCCUPANT RESTRAINT SYSTEMS 225
- □ Occupant Restraint Systems Features 226
- □ Important Safety Precautions 226
- □ Seat Belt Systems 227
- □ Supplemental Restraint Systems (SRS) 238
- □ Child Restraints 248
- □ Transporting Pets 267

■ SAFETY TIPS 268
- □ Transporting Passengers 268
- □ Exhaust Gas 268
- □ Safety Checks You Should Make Inside The Vehicle 269
- □ Periodic Safety Checks You Should Make Outside The Vehicle 271

SAFETY FEATURES

Anti-Lock Brake System (ABS)

The Anti-Lock Brake System (ABS) provides increased vehicle stability and brake performance under most braking conditions. The system automatically prevents wheel lock, and enhances vehicle control during braking.

The ABS performs a self-check cycle to ensure that the ABS is working properly each time the vehicle is started and driven. During this self-check, you may hear a slight clicking sound as well as some related motor noises.

ABS is activated during braking when the system detects one or more wheels begin to lock. Road conditions such as ice, snow, gravel, bumps, railroad tracks, loose debris, or panic stops may increase the likelihood of ABS activation(s).

You also may experience the following when ABS activates:

- The ABS motor noise (it may continue to run for a short time after the stop).
- The clicking sound of solenoid valves.
- Brake pedal pulsations.
- A slight drop of the brake pedal at the end of the stop.

These are all normal characteristics of ABS.

WARNING!

- **The ABS contains sophisticated electronic equipment that may be susceptible to interference caused by improperly installed or high output radio transmitting equipment. This interference can cause possible loss of anti-lock braking capability. Installation of such equipment should be performed by qualified professionals.**
- **Pumping of the Anti-Lock Brakes will diminish their effectiveness and may lead to a collision. Pumping makes the stopping distance longer. Just press firmly on your brake pedal when you need to slow down or stop.**
- **The ABS cannot prevent the natural laws of physics from acting on the vehicle, nor can it increase braking or steering efficiency beyond that afforded by the condition of the vehicle brakes and tires or the traction afforded.**
- **The ABS cannot prevent collisions, including those resulting from excessive speed in turns, following another vehicle too closely, or hydroplaning.**

(Continued)

WARNING! *(Continued)*

- **The capabilities of an ABS equipped vehicle must never be exploited in a reckless or dangerous manner that could jeopardize the user's safety or the safety of others.**

ABS is designed to function with the OEM tires. Modification may result in degraded ABS performance.

Anti-Lock Brake Warning Light

The yellow "Anti-Lock Brake Warning Light" will turn on when the ignition is turned to the ON/RUN mode and may stay on for as long as four seconds.

If the "Anti-Lock Brake Warning Light" remains on or comes on while driving, it indicates that the anti-lock portion of the brake system is not functioning and that service is required. However, the conventional brake system will continue to operate normally if the "Brake System Warning Light" is not on.

If the "Anti-Lock Brake Warning Light" is on, the brake system should be serviced as soon as possible to restore the benefits of anti-lock brakes. If the "Anti-Lock Brake Warning Light" does not come on when the ignition is turned to the ON/RUN mode, have the light repaired as soon as possible.

Electronic Brake Control System

Your vehicle is equipped with an advanced Electronic Brake Control system (EBC). This system includes Electronic Brake Force Distribution (EBD), Brake Assist System (BAS), Hill Start Assist (HSA), Traction Control System (TCS), Electronic Stability Control (ESC), and Electronic Roll Mitigation (ERM). These systems work together to enhance both vehicle stability and control in various driving conditions.

Your vehicle may also be equipped with Trailer Sway Control (TSC) and Hill Descent Control (HDC).

Electronic Brake Force Distribution (EBD)

This function manages the distribution of the braking torque between the front and rear axles by limiting braking pressure to the rear axle. This is done to prevent overslip of the rear wheels to avoid vehicle instability, and to prevent the rear axle from entering ABS before the front axle.

Brake System Warning Light

The red "Brake System Warning Light" will turn on when the ignition is turned to the ON/RUN mode and may stay on for as long as four seconds.

If the "Brake System Warning Light" remains on or comes on while driving, it indicates that the brake system is not functioning properly and that immediate service is required. If the "Brake System Warning Light" does not come on when the ignition is turned to the ON/RUN mode, have the light repaired as soon as possible.

Brake Assist System (BAS)

The BAS is designed to optimize the vehicle's braking capability during emergency braking maneuvers. The system detects an emergency braking situation by sensing the rate and amount of brake application and then applies optimum pressure to the brakes. This can help reduce braking distances. The BAS complements the anti-lock brake system (ABS). Applying the brakes very quickly results in the best BAS assistance. To receive the benefit of the system, you must apply continuous braking pressure during the stopping sequence, (do not "pump" the brakes). Do not reduce brake pedal pressure unless braking is no longer desired. Once the brake pedal is released, the BAS is deactivated.

WARNING!

The Brake Assist System (BAS) cannot prevent the natural laws of physics from acting on the vehicle, nor can it increase the traction afforded by prevailing road conditions. BAS cannot prevent collisions, including those resulting from excessive speed in turns, driving on very slippery surfaces, or hydroplaning. The capabilities of a BAS-equipped vehicle must never be exploited in a reckless or dangerous manner, which could jeopardize the user's safety or the safety of others.

Hill Start Assist (HSA)

The HSA system is designed to mitigate roll back from a complete stop while on an incline. If the driver releases the brake while stopped on an incline, HSA will continue to hold the brake pressure for a short period. If the driver does not apply the throttle before this time expires, the system will release brake pressure and the vehicle will roll down the hill as normal.

The following conditions must be met in order for HSA to activate:

- The feature must be enabled.
- The vehicle must be stopped.
- Park brake must be off.
- Driver door must be closed.
- The vehicle must be on a sufficient grade.
- The gear selection must match vehicle uphill direction (i.e., vehicle facing uphill is in forward gear; vehicle backing uphill is in REVERSE gear).
- HSA will work in REVERSE gear and all forward gears. The system will not activate if the transmission is in PARK or NEUTRAL. For vehicles equipped with a manual transmission, if the clutch is pressed, HSA will remain active.

WARNING!

There may be situations where the Hill Start Assist (HSA) will not activate and slight rolling may occur, such as on minor hills or with a loaded vehicle, or

(Continued)

WARNING! *(Continued)*

while pulling a trailer. HSA is not a substitute for active driving involvement. It is always the driver's responsibility to be attentive to distance to other vehicles, people, and objects, and most importantly brake operation to ensure safe operation of the vehicle under all road conditions. Your complete attention is always required while driving to maintain safe control of your vehicle. Failure to follow these warnings can result in a collision or serious personal injury.

Disabling And Enabling HSA

This feature can be turned on or turned off. To change the current setting using your instrument cluster display, refer to "Instrument Cluster Display" in "Getting To Know Your Instrument Panel" for further information.

For vehicles not equipped with an instrument cluster display, perform the following steps:

1. Center the steering wheel (front wheels pointing straight forward).
2. Shift the transmission into PARK.
3. Apply the parking brake.

4. Start the engine.
5. Rotate the steering wheel slightly more than one-half turn to the left.
6. Push the "ESC Off" button located in the lower switch bank below the climate control four times within 20 seconds. The "ESC Off Indicator Light" should turn on and turn off two times.
7. Rotate the steering wheel back to center and then an additional slightly more than one-half turn to the right.
8. Turn the ignition to the OFF mode and then back to ON. If the sequence was completed properly, the "ESC Off Indicator Light" will blink several times to confirm HSA is disabled.
9. Repeat these steps if you want to return this feature to its previous setting.

Traction Control System (TCS)

This system monitors the amount of wheel spin of each of the driven wheels. If wheel spin is detected, the TCS may apply brake pressure to the spinning wheel(s) and/or reduce engine power to provide enhanced acceleration and stability. A feature of the TCS, Brake Limited Differential (BLD), functions similar to a limited slip differential and controls the wheel spin across a driven axle. If one wheel on a driven axle is spinning faster than the other, the system will apply the brake of the spinning wheel. This will allow more engine torque to be applied to the wheel that is not spinning. BLD may remain enabled even if TCS and ESC are in a reduced mode.

Electronic Stability Control (ESC)

This system enhances directional control and stability of the vehicle under various driving conditions. The ESC corrects for over/under steering of the vehicle by applying the brake of the appropriate wheel to assist in counteracting the over/under steer condition. Engine power may also be reduced to help the vehicle maintain the desired path.

ESC uses sensors in the vehicle to determine the vehicle path intended by the driver and compares it to the actual path of the vehicle. When the actual path does not match the intended path, ESC applies the brake of the appropriate wheel to assist in counteracting the oversteer or understeer condition.

- Oversteer - when the vehicle is turning more than appropriate for the steering wheel position.
- Understeer - when the vehicle is turning less than appropriate for the steering wheel position.

The "ESC Activation/Malfunction Indicator Light" (located in the instrument cluster), starts to flash as soon as the tires lose traction and the ESC system becomes active. The "ESC Activation/Malfunction Indicator Light" also flashes when TCS is active. If the "ESC Activation/Malfunction Indicator Light" begins to flash during acceleration, ease up on the accelerator and apply as little throttle as possible. Be sure to adapt your speed and driving to the prevailing road conditions.

WARNING!

- **Electronic Stability Control (ESC) cannot prevent the natural laws of physics from acting on the vehicle, nor can it increase the traction afforded by prevailing road conditions. ESC cannot prevent accidents, including those resulting from excessive speed in turns, driving on very slippery surfaces, or hydroplaning. ESC also cannot prevent accidents resulting from loss of vehicle control due to inappropriate driver input for the conditions. Only a safe, attentive, and skillful driver can prevent accidents. The capabilities of an ESC equipped vehicle must never be exploited in a reckless or dangerous manner which**

(Continued)

WARNING! ***(Continued)***

could jeopardize the user's safety or the safety of others.

- **Vehicle modifications, or failure to properly maintain your vehicle, may change the handling characteristics of your vehicle, and may negatively affect the performance of the ESC system. Changes to the steering system, suspension, braking system, tire type and size or wheel size may adversely affect ESC performance. Improperly inflated and unevenly worn tires may also degrade ESC performance. Any vehicle modification or poor vehicle maintenance that reduces the effectiveness of the ESC system can increase the risk of loss of vehicle control, vehicle rollover, personal injury and death.**

The ESC system has three available operating modes in 4H range. The system has one operating mode in 4L range. Two-wheel drive vehicles and four-wheel drive vehicles in 2H range have two operating modes.

4H Range (4WD Models)

ESC On

This is the normal operating mode for ESC in 4H range.

ESC Partial Off

This mode is entered by momentarily pushing the ESC OFF switch. When in "ESC Partial Off" mode, the TCS portion of ESC (except for the limited slip feature described in the TCS section), has been disabled and the "ESC Off Indicator Light" will be illuminated.

This mode is intended to be used if the vehicle is in deep snow, sand, or gravel conditions and more wheel spin than ESC would normally allow is required to gain traction. To turn ESC on again, momentarily push the ESC OFF switch. This will restore the normal "ESC On" mode of operation.

NOTE: To improve the vehicle's traction when driving with snow chains, or starting off in deep snow, sand, or gravel, it may be desirable to switch to the "ESC Partial Off" mode by pushing the ESC OFF switch. Once the situation requiring ESC to be switched to the "ESC Partial Off" mode is overcome, turn ESC back on by momentarily pushing the ESC OFF switch. This may be done while the vehicle is in motion.

WARNING!

- **When in "ESC Partial Off" mode, the TCS functionality of ESC, (except for the limited slip feature described in the TCS section), has been disabled and the "ESC Off Indicator Light" will be illuminated. When in "ESC Partial Off" mode, the engine power reduction feature of TCS is disabled, and the enhanced vehicle stability offered by the ESC system is reduced.**
- **Trailer Sway control (TSC) is disabled when the ESC system is in the "ESC Partial Off" mode.**

ESC Full Off

This mode is entered by pushing and holding the ESC OFF switch for five seconds.

In the "ESC Full Off" mode, the engine torque reduction and stability features are disabled. Therefore, the enhanced vehicle stability offered by ESC is unavailable. In an emergency evasive maneuver, the ESC system will not engage to assist in maintaining stability. "ESC Full Off" mode is intended for off-highway or off-road use only.

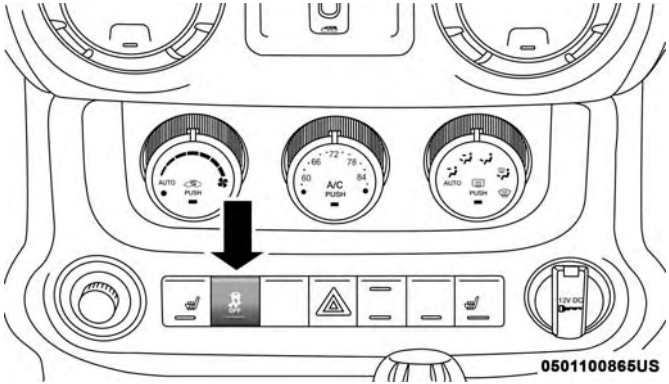

ESC OFF Switch

When in "ESC Full Off" mode, ESC and TCS, except for the Brake Limited Differential (BLD) feature described in the TCS section, are turned off until the vehicle reaches an approximate speed of 40 mph (64 km/h). For speeds at or exceeding approximately 40 mph (64 km/h) the ESC goes into "ESC Partial Off". When the vehicle speed drops below 35 mph (56 km/h), the ESC system goes back to "ESC Full Off". To turn ESC on again, momentarily push the ESC OFF switch. This will restore normal "ESC On" mode of operation. The "ESC Off Indicator Light" will always be illuminated when ESC is in "ESC Partial Off" and "ESC full Off".

WARNING!

With the ESC in "ESC Full Off" mode, the engine torque reduction and stability features offered by ESC and ERM are disabled. In an emergency evasive maneuver, the ESC and ERM systems will not engage to assist in maintaining stability. The "ESC Full Off" mode is intended for off-road use only.

5

4L Range (4WD Models)

ESC Full Off

This is the normal operating mode for ESC in 4L range. Whenever the vehicle is started in 4L range, or the transfer case (if equipped) is shifted from 4H range or NEUTRAL to 4L range, the ESC system will be in this mode. In 4L range, ESC and TCS, except for the Brake Limited Differential (BLD) feature described in the TCS section, are turned off until the vehicle reaches an approximate speed of 40 mph (64 km/h). For speeds at or exceeding approximately 40 mph (64 km/h) the ESC goes into "ESC Partial Off" When the vehicle speed drops below 35 mph (56 km/h), the ESC system goes back to "ESC Full Off". The ESC is in "ESC Full Off" at low vehicle speeds in 4L range so that it will not interfere with off-road driving, but the ESC function returns to provide the stability feature at speeds

above 40 mph (64 km/h). The "ESC OFF Indicator Light" will always be illuminated in 4L range when ESC is in "ESC Full Off" or "ESC Partial Off".

NOTE: The "ESC OFF" message will display and an audible chime will sound when the gear selector is placed in the PARK position from any other position, and then moved out of the PARK position. This will occur even if the message was previously cleared.

WARNING!

With the ESC in "ESC Full Off" mode, the engine torque reduction and stability features offered by ESC and ERM are disabled. In an emergency evasive maneuver, the ESC and ERM systems will not engage to assist in maintaining stability. The "ESC Full Off" mode is intended for off-road use only.

2H Range (4WD Models) Or 2WD Models

ESC On

This is the normal operating mode for ESC in 2H range and on 2WD vehicles.

ESC Partial Off

When in "ESC Partial Off" mode, the TCS portion of ESC (except for the limited slip feature described in the TCS section), has been disabled and the "ESC Off Indicator Light" will be illuminated.

This mode is intended to be used if the vehicle is in deep snow, sand, or gravel conditions and more wheel spin than ESC would normally allow is required to gain traction. To turn ESC on again, momentarily push the ESC OFF switch. This will restore the normal "ESC On" mode of operation.

NOTE: To improve the vehicle's traction when driving with snow chains, or starting off in deep snow, sand, or gravel, it may be desirable to switch to the "ESC Partial Off" mode by pushing the "ESC Full Off" switch. Once the situation requiring ESC to be switched to the "ESC Partial Off" mode is overcome, turn ESC back on by momentarily pushing the "ESC Full Off" switch. This may be done while the vehicle is in motion.

The ESC will restore to normal ESC On mode after each key on.

WARNING!

- **When in "Partial Off" mode, the TCS functionality of ESC, (except for the limited slip feature described in the TCS section), has been disabled and the "ESC Off Indicator Light" will be illuminated. When in "Partial Off" mode, the engine power reduction feature of TCS is disabled, and the enhanced vehicle stability offered by the ESC system is reduced.**
- **Trailer Sway Control (TSC) is disabled when the ESC system is in the "Partial Off" mode.**

ESC Activation/Malfunction Indicator Light And ESC OFF Indicator Light

The "ESC Activation/Malfunction Indicator Light" in the instrument cluster will come on when the ignition is turned to the ON mode. It should go out with the engine running. If the "ESC Activation/Malfunction Indicator Light" comes on continuously with the engine running, a malfunction has been detected in the ESC system. If this light remains on after several ignition cycles, and the vehicle has been driven several miles (kilometers) at speeds greater than 30 mph (48 km/h), see your authorized dealer as soon as possible to have the problem diagnosed and corrected.

The "ESC Activation/Malfunction Indicator Light" (located in the instrument cluster) starts to flash as soon as the tires lose traction and the ESC system becomes active. The "ESC Activation/Malfunction Indicator Light" also flashes when TCS is active. If the "ESC Activation/Malfunction Indicator Light" begins to flash during acceleration, ease up on the accelerator and apply as little throttle as possible. Be sure to adapt your speed and driving to the prevailing road conditions.

NOTE:

- The "ESC Activation/Malfunction Indicator Light" and the "ESC OFF Indicator Light" come on momentarily each time the ignition is turned ON.
- Each time the ignition is turned ON, the ESC system will be on even if it was turned off previously.
- The ESC system will make buzzing or clicking sounds when it is active. This is normal; the sounds will stop when ESC becomes inactive following the maneuver that caused the ESC activation.

The "ESC OFF Indicator Light" indicates the customer has elected to have the Electronic Stability Control (ESC) in a reduced mode.

Electronic Roll Mitigation (ERM)

This system anticipates the potential for wheel lift by monitoring the driver's steering wheel input and the speed of the vehicle. When ERM determines that the rate of change of the steering wheel angle and vehicle's speed are sufficient to potentially cause wheel lift, it then applies the appropriate brake and may also reduce engine power to lessen the chance that wheel lift will occur. ERM can only reduce the chance of wheel lift occurring during severe or evasive driving maneuvers; it cannot prevent wheel lift due to other factors, such as road conditions, leaving the roadway, or striking objects or other vehicles.

NOTE: ERM is disabled anytime the ESC is in "Full Off" mode (if equipped). Refer to "Electronic Stability Control (ESC)" in this section for a complete explanation of the available ESC modes.

WARNING!

Many factors, such as vehicle loading, road conditions and driving conditions, influence the chance that wheel lift or rollover may occur. ERM cannot prevent all wheel lift or roll overs, especially those that involve leaving the roadway or striking objects or other vehicles. The capabilities of an ERM-equipped vehicle must never be exploited in a reckless or dangerous manner which could jeopardize the user's safety or the safety of others.

Trailer Sway Control (TSC)

TSC uses sensors in the vehicle to recognize an excessively swaying trailer and will take the appropriate actions to attempt to stop the sway. TSC will become active automatically once an excessively swaying trailer is recognized.

NOTE: TSC cannot stop all trailers from swaying. Always use caution when towing a trailer and follow the trailer tongue weight recommendations. Refer to "Trailer Towing" in "Starting And Operating" for further information.

When TSC is functioning, the "ESC Activation/ Malfunction Indicator Light" will flash, the engine power may be reduced and you may feel the brakes being applied to individual wheels to attempt to stop the trailer from swaying. TSC is disabled when the ESC system is in the "Partial Off" or "Full Off" modes.

WARNING!

If TSC activates while driving, slow the vehicle down, stop at the nearest safe location, and adjust the trailer load to eliminate trailer sway.

Hill Descent Control (HDC) — If Equipped

HDC is only intended for low speed off-road driving. HDC maintains vehicle speed while descending hills in off-road driving conditions by applying the brakes when necessary.

The symbol indicates the status of the Hill Descent Control (HDC) feature. The lamp will be on solid when HDC is armed. HDC can only be armed when the transfer case is in the "4WD LOW" position and the vehicle speed is less then 30 mph (48 km/h). If these conditions are not met while attempting to use the HDC feature, the HDC indicator light will flash on/off.

When enabled, HDC senses the terrain and activates when the vehicle is descending a hill. HDC speed may be adjusted by the driver to suit the driving conditions. The speed corresponds to the transmission gear selected.

Gear	Approximate HDC Set Speed
1st	1 mph (1.5 km/h)
2nd	2.5 mph (4 km/h)
3rd	4 mph (6.5 km/h)
4th	5.5 mph (9 km/h)
DRIVE	7.5 mph (12 km/h)
REVERSE	1 mph (1.5 km/h)

However, the driver can override HDC operation by applying the brake to slow the vehicle down below the HDC control speed. If more speed is desired during HDC control, the accelerator pedal will increase vehicle speed in the usual manner. When either the brake or the accelerator is released, HDC will control the vehicle at the original set speed.

Enabling HDC

1. Shift the transfer case into 4WD LOW range. Refer to "Four-Wheel Drive Operation" in "Starting and Operating" for further information.
2. Push the "Hill Descent" button. The "Hill Descent Control Indicator Light" in the instrument cluster will turn on solid.

NOTE:

- If the transfer case is not in 4WD LOW range, the "Hill Descent Control Indicator Light" will flash for five seconds and HDC will not be enabled.
- If the ESC senses that the brakes are overheating the "Hill Descent Control Indicator Light" will flash for five seconds and HDC will become deactivated until the brakes have cooled.

Disabling HDC

Push the "Hill Descent" button or shift the transfer case out of 4WD LOW range. The "Hill Descent Control Indicator" light in the instrument cluster will turn off.

AUXILIARY DRIVING SYSTEMS

Tire Pressure Monitor System (TPMS)

The Tire Pressure Monitoring System (TPMS) will warn the driver of a low tire pressure based on the vehicle recommended cold placard pressure.

The tire pressure will vary with temperature by about 1 psi (7.0 kPa) for every 12°F (6.5°C). This means that when the outside temperature decreases, the tire pressure will decrease. Tire pressure should always be set based on cold inflation tire pressure. This is defined as the tire pressure after a vehicle has not been driven for more than three hours, or driven less than 1 mile (1.6 km) after a three-hour period. Refer to "Tires" in "Servicing and Maintenance" for information on how to properly inflate the vehicle's tires. The tire pressure will also increase as the vehicle is driven; this is normal and there should be no adjustment for this increased pressure.

The TPMS will warn the driver of a low tire pressure if the tire pressure falls below the low pressure warning threshold for any reason, including low temperature effects, or natural pressure loss through the tire.

The TPMS will continue to warn the driver of low tire pressure as long as the condition exists, and will not turn off until the tire pressure is at or above recommended cold placard pressure. Once the "Tire Pressure Monitoring Telltale Light" has been illuminated, the tire pressure must be increased to the recommended cold placard pressure in order for the "Tire Pressure Monitoring Telltale Light" to be turned OFF.

NOTE: When filling warm tires, the tire pressure may need to be increased up to an additional 4 psi (30 kPa) above the recommended cold placard pressure in order to turn the Tire Pressure Monitoring Telltale Light off.

The system will automatically update and the "Tire Pressure Monitoring Telltale Light" will extinguish once the updated tire pressures have been received. The vehicle may need to be driven for up to 20 minutes above 15 mph (24 km/h) to receive this information.

For example, your vehicle may have a recommended cold (parked for more than three hours) air pressure of 35 psi (241 kPa). If the ambient temperature is 68°F (20°C) and the measured tire pressure is 30 psi (207 kPa), a temperature drop to 20°F (-7°C) will decrease the tire pressure to approximately 26 psi (179 kPa). This tire pressure is sufficiently low enough to turn ON the "Tire Pressure Monitoring Telltale Light." Driving the vehicle may cause the tire pressure to rise to approximately 30 psi (207 kPa), but

the "Tire Pressure Monitoring Telltale Light" will still be ON. In this situation, the "Tire Pressure Monitoring Telltale Light" will turn OFF only after the tires have been inflated to the vehicle's recommended cold placard pressure value.

CAUTION!

- **The TPMS has been optimized for the original equipment tires and wheels. TPMS pressures and warnings have been established for the tire size equipped on your vehicle. Undesirable system operation or sensor damage may result when using replacement equipment that is not of the same size, type, and/or style. The TPM sensor is not designed for use on aftermarket wheels and may contribute to a poor overall system performance or sensor damage. Customers are encouraged to use OEM wheels to assure proper TPM feature operation.**
- **Using aftermarket tire sealants may cause the Tire Pressure Monitoring System (TPMS) sensor to become inoperable. After using an aftermarket tire sealant it is recommended that you take your vehicle to an authorized dealership to have your sensor function checked.**

(Continued)

CAUTION! ***(Continued)***

- **After inspecting or adjusting the tire pressure, always reinstall the valve stem cap. This will prevent moisture and dirt from entering the valve stem, which could damage the Tire Pressure Monitoring Sensor.**

NOTE:

- The TPMS is not intended to replace normal tire care and maintenance, nor to provide warning of a tire failure or condition.
- The TPMS should not be used as a tire pressure gauge while adjusting your tire pressure.
- Driving on a significantly under-inflated tire causes the tire to overheat and can lead to tire failure. Under-inflation also reduces fuel efficiency and tire tread life, and may affect the vehicle's handling and stopping ability.
- The TPMS is not a substitute for proper tire maintenance, and it is the driver's responsibility to maintain correct tire pressure, even if under-inflation has not reached the level to trigger illumination of the "Tire Pressure Monitoring Telltale Light."

- Seasonal temperature changes will affect tire pressure, and the TPMS will monitor the actual tire pressure in the tire.

Base System

The Tire Pressure Monitor System (TPMS) uses wireless technology with wheel rim-mounted electronic sensors to monitor tire pressure levels. Sensors, mounted to each wheel as part of the valve stem, transmit tire pressure readings to the Receiver Module.

NOTE: It is particularly important for you to check the tire pressure in all of your tires regularly and to maintain the proper pressure.

The Tire Pressure Monitor System (TPMS) consists of the following components:

- Receiver Module
- Four Tire Pressure Monitoring Sensors
- Tire Pressure Monitoring Telltale Light

A tire pressure monitoring sensor is located in the spare wheel if the vehicle is equipped with a matching full size spare wheel and tire assembly. The matching full size spare tire can be used in place of any of the four road tires. A low spare tire will not cause the "Tire Pressure Monitoring Telltale Light" to illuminate or the chime to sound while stowed in the spare location.

The "Tire Pressure Monitoring Telltale Light" will illuminate in the instrument cluster, a "LOW TIRE PRESSURE" message will display in the instrument cluster, and an audible chime will be activated when one or more of the four active road tire pressures are low. Should this occur, you should stop as soon as possible, check the inflation pressure of each tire on your vehicle, and inflate each tire to the vehicle's recommended cold placard pressure value. The system will automatically update and the "Tire Pressure Monitoring Telltale Light" will extinguish once the updated tire pressures have been received. The vehicle may need to be driven for up to 20 minutes above 15 mph (24 km/h) to receive this information.

The "Tire Pressure Monitoring Telltale Light" will flash on and off for 75 seconds, and will remain on solid when a system fault is detected. The system fault will also sound a chime. If the ignition key is cycled, this sequence will repeat, providing the system fault still exists. The "Tire

Pressure Monitoring Telltale Light" will turn off when the fault condition no longer exists. A system fault can occur by any of the following scenarios:

1. Jamming due to electronic devices or driving next to facilities emitting the same Radio Frequencies as the TPM sensors.
2. Installing some form of aftermarket window tinting that affects radio wave signals.
3. Lots of snow or ice around the wheels or wheel housings.
4. Using tire chains on the vehicle.
5. Using wheels/tires not equipped with TPM sensors.

Vehicles not equipped with instrument cluster display will inform the driver which tire(s) are low but not provide actual tire pressure. The low tire ISO telltale will illuminate along with "LoTIrE" message displayed in the ODO and then it will scroll to which tire location is lower than the Placard Value.

Tire location will be displayed as follows:

LF = **L**eft **F**ront

rF = **r**ight **F**ront

Lr = **L**eft **r**ear

rr = **r**ight **r**ear

NOTE:

- If your vehicle is equipped with a matching full-size spare wheel and tire assembly, it has a tire pressure monitoring sensor, and can be monitored by the Tire Pressure Monitoring System (TPMS) when swapped with a low pressure road tire. In the event that the matching full-size spare tire is swapped with a low pressure road tire, the next ignition key cycle will still show the "Tire Pressure Monitoring Telltale Light" to be ON, and a chime to sound. Driving the vehicle for up to 20 minutes above 15 mph (24 km/h) will turn OFF the "Tire Pressure Monitoring Telltale Light" as long as none of the road tires are below the low pressure warning threshold.
- If your vehicle is not equipped with a matching full-size spare wheel and tire assembly, it does not have a tire pressure monitoring sensor in the spare tire. The TPMS will not be able to monitor the tire pressure. If you install the spare tire in place of a road tire that has a pressure below the low-pressure warning limit, upon the next ignition key cycle, a chime will sound and the "Tire Pressure Monitoring Telltale Light" will turn ON. After

driving the vehicle for up to 20 minutes above 15 mph (24 km/h), the "Tire Pressure Monitoring Telltale Light" will flash on and off for 75 seconds and then remain on solid. For each subsequent ignition key cycle, a chime will sound and the "Tire Pressure Monitoring Telltale Light" will flash on and off for 75 seconds and then remain on solid. Once you repair or replace the original road tire, and reinstall it on the vehicle in place of the spare tire, the TPMS will update automatically and the "Tire Pressure Monitoring Telltale Light" will turn OFF, as long as no tire pressure is below the low-pressure warning limit in any of the four active road tires. The vehicle may need to be driven for up to 20 minutes above 15 mph (24 km/h) in order for the TPMS to receive this information.

Premium System — If Equipped

The Tire Pressure Monitor System (TPMS) uses wireless technology with wheel rim-mounted electronic sensors to monitor tire pressure levels. Sensors, mounted to each wheel as part of the valve stem, transmit tire pressure readings to the Receiver Module.

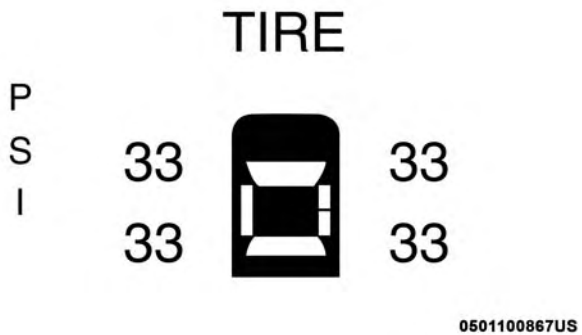

Tire Pressure Monitor Display

NOTE: It is particularly important, for you to regularly check the tire pressure in all of your tires and to maintain the proper pressure.

The Tire Pressure Monitor System (TPMS) consists of the following components:

- Receiver Module
- Four Tire Pressure Monitoring Sensors
- Various Tire Pressure Monitoring System Messages, which display in the instrument cluster, and a graphic displaying tire pressures
- Tire Pressure Monitoring Telltale Light

A tire pressure monitoring sensor is located in the spare wheel, if the vehicle is equipped with a matching full-size spare wheel and tire assembly. The matching full-size spare tire can be used in place of any of the four road tires.

Tire Pressure Monitoring Low Pressure Warnings

The Tire Pressure Monitoring Telltale Light will illuminate in the instrument cluster, and an audible chime will be activated, when one or more of the four active road tire pressures are low. In addition, the instrument cluster will display an "Inflate to XX" message. A graphic display of the pressure value(s) with the low tire(s) highlighted or in a different color will also be displayed. Refer to "Instrument Cluster Display" in "Getting To Know Your Instrument Panel" for further information.

NOTE: Your system can be set to display pressure units in PSI, kPa, or BAR.

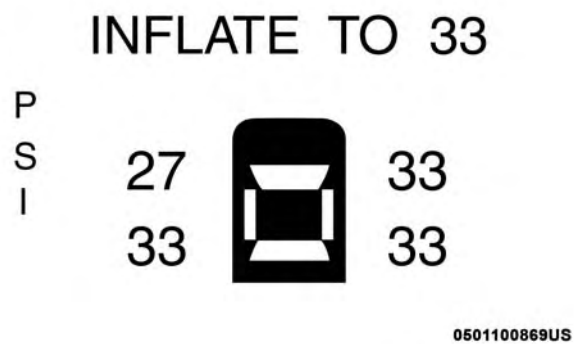

Tire Pressure Monitor Display

Should a low tire condition occur on any of the four active road tire(s), you should stop as soon as possible, and inflate the low tire(s) that is highlighted or shown in a different color on the graphic display to the vehicle's recommended cold tire pressure inflation value, as shown in the "Inflate to XX" message. The system will automatically update, the graphic display of the pressure value(s) will no longer be highlighted or shown in a different color and the Tire Pressure Monitoring Telltale Light will extinguish once the updated tire pressure(s) have been received.

NOTE: When filling warm tires, the tire pressure may need to be increased up to an additional 4 psi (30 kPa) above the recommended cold placard pressure in order to turn the Tire Pressure Monitoring Telltale Light off.

The vehicle may need to be driven for up to 20 minutes above 15 mph (24 km/h) to receive this information.

Service TPM System Warning

The "Tire Pressure Monitoring Telltale Light" will flash on and off for 75 seconds, and remain on solid when a system fault is detected. The system fault will also sound a chime. The instrument cluster will display a "SERVICE TPM SYSTEM" message for a minimum of five seconds. This message is then followed by a graphic display, with "- -" in place of the pressure value(s), indicating which Tire Pressure Monitoring Sensor(s) is not being received.

If the ignition switch is cycled, this sequence will repeat, providing the system fault still exists. If the system fault no longer exists, the "Tire Pressure Monitoring Telltale Light" will no longer flash, the "SERVICE TPM SYSTEM" message will not be present, and a pressure value will be displayed instead of dashes. A system fault can occur by any of the following:

- Jamming due to electronic devices or driving next to facilities emitting the same Radio Frequencies as the TPM sensors.
- Installing some form of aftermarket window tinting that affects radio wave signals.
- Lots of snow or ice around the wheels or wheel housings.
- Using tire chains on the vehicle.
- Using wheels/tires not equipped with TPM sensors.

NOTE:

- If your vehicle is equipped with a matching full-size spare wheel and tire assembly, it has a tire pressure monitoring sensor, and can be monitored by the Tire Pressure Monitoring System (TPMS) when swapped with a low pressure road tire. In the event that the matching full-size spare tire is swapped with a low pressure road tire, the next ignition switch cycle will still show the "Tire Pressure Monitoring Telltale Light" to be ON, a chime to sound, an "Inflate to XX" message to appear in the instrument cluster, and the graphic display will still show the low tire pressure value highlighted or shown in a different color. Driving the vehicle for up to 20 minutes above 15 mph (24 km/h) will turn OFF the "Tire Pressure Monitoring Telltale Light" as long as none of road tires are below the low pressure warning threshold.
- If your vehicle is not equipped with a matching full-size spare wheel and tire assembly, it does not have a tire pressure monitoring sensor in the spare tire. The TPMS will not be able to monitor the tire pressure. If you install the spare tire in place of a road tire that has a pressure below the low-pressure warning limit, upon the next ignition switch cycle, the "Tire Pressure Monitoring Telltale Light" will remain ON, a chime will sound, and the instrument cluster will still display a highlighted or different color pressure value in the graphic display. After driving the vehicle for up to 20 minutes above 15 mph (24 km/h), the "Tire Pressure Monitoring Telltale Light" will flash on and off for 75 seconds and then remain on solid. In addition, the instrument cluster will display a "SERVICE TPM SYSTEM" message for a minimum of five seconds and then display dashes (- -) in place of the pressure value. For each subsequent ignition switch cycle, a chime will sound, the "Tire Pressure Monitoring Telltale Light" will flash on and off for 75 seconds and then remain on solid, and the instrument cluster will display a "SERVICE TPM SYSTEM" message for a minimum of five seconds and then display dashes (- -) in place of the pressure value.
- Once you repair or replace the original road tire, and reinstall it on the vehicle in place of the spare tire, the TPMS will update automatically.

In addition, the "Tire Pressure Monitoring Telltale Light" will turn OFF and the graphic in the instrument cluster will display a new pressure value instead of dashes (- -), as long as no tire pressure is below the low-pressure warning limit in any of the four active road tires. The vehicle may need to be driven for up to 10 minutes above 15 mph (24 km/h) in order for the TPMS to receive this information.

TPMS Deactivation — If Equipped

The TPMS can be deactivated if replacing all four wheel and tire assemblies (road tires) with wheel and tire assemblies that do not have TPMS Sensors, such as when installing winter wheel and tire assemblies on your vehicle.

To deactivate the TPMS, first, replace all four wheel and tire assemblies (road tires) with tires not equipped with Tire Pressure Monitoring (TPM) Sensors. Then, drive the vehicle for 20 minutes above 15 mph (24 km/h). The TPMS will chime, the "TPM Telltale Light" will flash on and off for 75 seconds and then remain on. The instrument cluster will display the "SERVICE TPM SYSTEM" message and then display dashes (--) in place of the pressure values.

Beginning with the next ignition cycle, the TPMS will no longer chime or display the "SERVICE TPM SYSTEM" message in the instrument cluster but dashes (--) will remain in place of the pressure values.

To reactivate the TPMS, replace all four wheel and tire assemblies (road tires) with tires equipped with TPM sensors. Then, drive the vehicle for up to 20 minutes above 15 mph (24 km/h). The TPMS will chime, the "TPM Telltale Light" will flash on and off for 75 seconds and then turn off. The instrument cluster will display the "SERVICE TPM SYSTEM" message and then display pressure values in place of the dashes. On the next ignition cycle the "SERVICE TPM SYSTEM" message will no longer be displayed as long as no system fault exists.

General Information

The following regulatory statement applies to all radio frequency (RF) devices equipped in this vehicle:

This device complies with Part 15 of the FCC Rules and with Industry Canada license-exempt RSS standard(s). Operation is subject to the following two conditions:

(1) This device may not cause harmful interference, and

(2) This device must accept any interference received, including interference that may cause undesired operation.

NOTE: Changes or modifications not expressly approved by the party responsible for compliance could void the user's authority to operate the equipment.

OCCUPANT RESTRAINT SYSTEMS

Some of the most important safety features in your vehicle are the restraint systems:

Occupant Restraint Systems Features

- Seat Belt Systems
- Supplemental Restraint Systems (SRS) Air Bags
- Child Restraints

Some of the safety features described in this section may be standard equipment on some models, or may be optional equipment on others. If you are not sure, ask your authorized dealer.

Important Safety Precautions

Please pay close attention to the information in this section. It tells you how to use your restraint system properly, to keep you and your passengers as safe as possible.

Here are some simple steps you can take to minimize the risk of harm from a deploying air bag:

1. Children 12 years old and under should always ride buckled up in a vehicle with a rear seat.
2. If a child from 2 to 12 years old (not in a rear-facing child restraint) must ride in the front passenger seat, move the seat as far back as possible and use the proper child restraint (refer to "Child Restraints" in this section for further information).
3. Children that are not big enough to wear the vehicle seat belt properly (refer to "Child Restraints" in this section for further information) should be secured in a vehicle with a rear seat in child restraints or belt-positioning booster seats. Older children who do not use child restraints or belt-positioning booster seats should ride properly buckled up in a vehicle with a rear seat.
4. Never allow children to slide the shoulder belt behind them or under their arm.
5. You should read the instructions provided with your child restraint to make sure that you are using it properly.
6. All occupants should always wear their lap and shoulder belts properly.
7. The driver and front passenger seats should be moved back as far as practical to allow the front air bags room to inflate.
8. Do not lean against the door or window. If your vehicle has side air bags, and deployment occurs, the side air bags will inflate forcefully into the space between occupants and the door and occupants could be injured.

9. If the air bag system in this vehicle needs to be modified to accommodate a disabled person, refer to the "Customer Assistance" section for customer service contact information.

WARNING!

- **Never place a rear-facing child restraint in front of an air bag. A deploying passenger front air bag can cause death or serious injury to a child 12 years or younger, including a child in a rear-facing child restraint.**
- **Only use a rear-facing child restraint in a vehicle with a rear seat.**

Seat Belt Systems

Buckle up even though you are an excellent driver, even on short trips. Someone on the road may be a poor driver and could cause a collision that includes you. This can happen far away from home or on your own street.

Research has shown that seat belts save lives, and they can reduce the seriousness of injuries in a collision. Some of the worst injuries happen when people are thrown from the vehicle. Seat belts reduce the possibility of ejection and the risk of injury caused by striking the inside of the vehicle. Everyone in a motor vehicle should be belted at all times.

Enhanced Seat Belt Use Reminder System (BeltAlert)

Driver and Passenger BeltAlert (if equipped)

BeltAlert is a feature intended to remind the driver and outboard front seat passenger (if equipped with outboard front passenger seat BeltAlert) to buckle their seat belts. The Belt Alert feature is active whenever the ignition switch is in the START or ON/RUN position.

Initial Indication

If the driver is unbuckled when the ignition switch is first in the START or ON/RUN position, a chime will signal for a few seconds. If the driver or outboard front seat passenger (if equipped with outboard front passenger seat BeltAlert) is unbuckled when the ignition switch is first in the START or ON/RUN position the Seat Belt Reminder Light will turn on and remain on until both outboard front seat belts are buckled. The outboard front passenger seat BeltAlert is not active when an outboard front passenger seat is unoccupied.

BeltAlert Warning Sequence

The BeltAlert warning sequence is activated when the vehicle is moving above a specified vehicle speed range and the driver or outboard front seat passenger is unbuckled (if equipped with outboard front passenger seat BeltAlert) (the outboard front passenger seat BeltAlert is not active when the outboard front passenger seat is unoccupied). The BeltAlert warning sequence starts by blinking the Seat Belt Reminder Light and sounding an intermittent chime. Once the BeltAlert warning sequence has completed, the Seat Belt Reminder Light will remain on until the seat belts are buckled. The BeltAlert warning sequence may repeat based on vehicle speed until the driver and occupied outboard front seat passenger seat belts are buckled. The driver should instruct all occupants to buckle their seat belts.

Change of Status

If the driver or outboard front seat passenger (if equipped with outboard front passenger seat BeltAlert) unbuckles their seat belt while the vehicle is traveling, the BeltAlert warning sequence will begin until the seat belts are buckled again.

The outboard front passenger seat BeltAlert is not active when the outboard front passenger seat is unoccupied. BeltAlert may be triggered when an animal or other items are placed on the outboard front passenger seat or when the seat is folded flat (if equipped). It is recommended that pets be restrained in the rear seat (if equipped) in pet harnesses or pet carriers that are secured by seat belts, and cargo is properly stowed.

BeltAlert can be activated or deactivated by your authorized dealer. FCA US LLC does not recommend deactivating BeltAlert.

NOTE: If BeltAlert has been deactivated and the driver or outboard front seat passenger (if equipped with outboard front passenger seat BeltAlert) is unbuckled the Seat Belt Reminder Light will turn on and remain on until the driver and outboard front seat passenger seat belts are buckled.

Lap/Shoulder Belts

All seating positions in your vehicle are equipped with lap/shoulder belts.

The seat belt webbing retractor will lock only during very sudden stops or collisions. This feature allows the shoulder part of the seat belt to move freely with you under normal conditions. However, in a collision the seat belt will lock

and reduce your risk of striking the inside of the vehicle or being thrown out of the vehicle.

WARNING!

- **Relying on the air bags alone could lead to more severe injuries in a collision. The air bags work with your seat belt to restrain you properly. In some collisions, the air bags won't deploy at all. Always wear your seat belt even though you have air bags.**
- **In a collision, you and your passengers can suffer much greater injuries if you are not properly buckled up. You can strike the interior of your vehicle or other passengers, or you can be thrown out of the vehicle. Always be sure you and others in your vehicle are buckled up properly.**
- **It is dangerous to ride in a cargo area, inside or outside of a vehicle. In a collision, people riding in these areas are more likely to be seriously injured or killed.**
- **Do not allow people to ride in any area of your vehicle that is not equipped with seats and seat belts.**
- **Be sure everyone in your vehicle is in a seat and using a seat belt properly. Occupants, including the**

(Continued)

WARNING! ***(Continued)***

driver, should always wear their seat belts whether or not an air bag is also provided at their seating position to minimize the risk of severe injury or death in the event of a crash.
- **Wearing your seat belt incorrectly could make your injuries in a collision much worse. You might suffer internal injuries, or you could even slide out of the seat belt. Follow these instructions to wear your seat belt safely and to keep your passengers safe, too.**
- **Two people should never be belted into a single seat belt. People belted together can crash into one another in a collision, hurting one another badly. Never use a lap/shoulder belt or a lap belt for more than one person, no matter what their size.**

WARNING!

- **A lap belt worn too high can increase the risk of injury in a collision. The seat belt forces won't be at the strong hip and pelvic bones, but across your abdomen. Always wear the lap part of your seat belt as low as possible and keep it snug.**

(Continued)

WARNING! *(Continued)*

- **A twisted seat belt may not protect you properly. In a collision, it could even cut into you. Be sure the seat belt is flat against your body, without twists. If you can't straighten a seat belt in your vehicle, take it to your authorized dealer immediately and have it fixed.**
- **A seat belt that is buckled into the wrong buckle will not protect you properly. The lap portion could ride too high on your body, possibly causing internal injuries. Always buckle your seat belt into the buckle nearest you.**
- **A seat belt that is too loose will not protect you properly. In a sudden stop, you could move too far forward, increasing the possibility of injury. Wear your seat belt snugly.**
- **A seat belt that is worn under your arm is dangerous. Your body could strike the inside surfaces of the vehicle in a collision, increasing head and neck injury. A seat belt worn under the arm can cause internal injuries. Ribs aren't as strong as shoulder bones. Wear the seat belt over your shoulder so that your strongest bones will take the force in a collision.**

(Continued)

WARNING! *(Continued)*

- **A shoulder belt placed behind you will not protect you from injury during a collision. You are more likely to hit your head in a collision if you do not wear your shoulder belt. The lap and shoulder belt are meant to be used together.**
- **A frayed or torn seat belt could rip apart in a collision and leave you with no protection. Inspect the seat belt system periodically, checking for cuts, frays, or loose parts. Damaged parts must be replaced immediately. Do not disassemble or modify the seat belt system. Seat belt assemblies must be replaced after a collision.**

Lap/Shoulder Belt Operating Instructions

1. Enter the vehicle and close the door. Sit back and adjust the seat.

2. The seat belt latch plate is above the back of the front seat, and next to your arm in the rear seat (for vehicles equipped with a rear seat). Grasp the latch plate and pull out the seat belt. Slide the latch plate up the webbing as far as necessary to allow the seat belt to go around your lap.

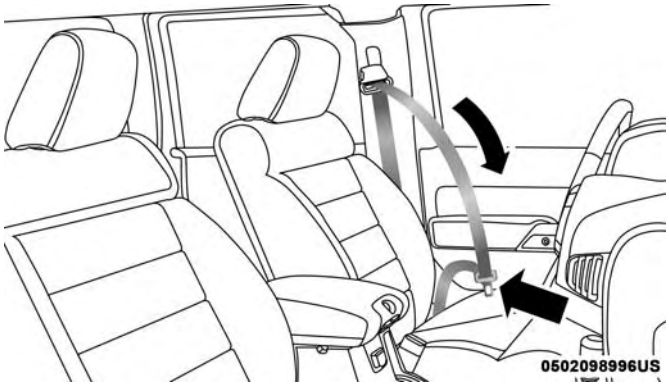

Pulling Out The Latch Plate

3. When the seat belt is long enough to fit, insert the latch plate into the buckle until you hear a "click."

Inserting Latch Plate Into Buckle

4. Position the lap belt so that it is snug and lies low across your hips, below your abdomen. To remove slack in the lap belt portion, pull up on the shoulder belt. To loosen the lap belt if it is too tight, tilt the latch plate and pull on the lap belt. A snug seat belt reduces the risk of sliding under the seat belt in a collision.

Positioning The Lap Belt

5. Position the shoulder belt across the shoulder and chest with minimal, if any slack so that it is comfortable and not resting on your neck. The retractor will withdraw any slack in the shoulder belt.
6. To release the seat belt, push the red button on the buckle. The seat belt will automatically retract to its stowed position. If necessary, slide the latch plate down the webbing to allow the seat belt to retract fully.

Rear Center Lap/Shoulder Belt Retractor Lockout

This feature is designed to lock the retractor whenever the rear seatback is not fully latched. This prevents someone from wearing the rear center lap/shoulder belt when the rear seatback is not fully latched.

NOTE: If the rear center lap/shoulder belt cannot be pulled out, check that the rear seatback is fully latched. If the rear seatback is properly latched and the rear center lap/shoulder belt still cannot be pulled out, the Automatic-Locking Retractor (ALR) system may be activated. To reset this feature you must let all of the seat belt webbing return into the retractor. You will not be able to pull out more webbing until all of the webbing has been returned back into the retractor.

WARNING!

The rear center lap/shoulder belt is equipped with a lock-out feature to ensure that the rear seatback is in

(Continued)

WARNING! *(Continued)*

the fully upright and locked position when occupied. If the rear seatback is not fully upright and locked and the rear center lap/shoulder belt can be pulled out of the retractor, immediately take the vehicle to your authorized dealer for service. Failure to follow this warning could result in serious injury or death.

Lap/Shoulder Belt Untwisting Procedure

Use the following procedure to untwist a twisted lap/shoulder belt.

1. Position the latch plate as close as possible to the anchor point.
2. At about 6 to 12 inches (15 to 30 cm) above the latch plate, grasp and twist the seat belt webbing 180 degrees to create a fold that begins immediately above the latch plate.
3. Slide the latch plate upward over the folded webbing. The folded webbing must enter the slot at the top of the latch plate.
4. Continue to slide the latch plate up until it clears the folded webbing and the seat belt is no longer twisted.

Adjustable Upper Shoulder Belt Anchorage

In the driver and front passenger seats, the top of the shoulder belt can be adjusted upward or downward to position the seat belt away from your neck. Push or squeeze the anchorage button to release the anchorage, and move it up or down to the position that serves you best.

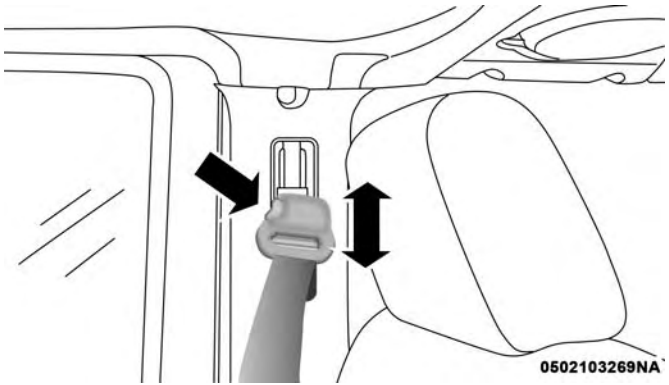

Adjustable Upper Anchorage

As a guide, if you are shorter than average, you will prefer the shoulder belt anchorage in a lower position, and if you are taller than average, you will prefer the shoulder belt anchorage in a higher position. After you release the anchorage button, try to move it up or down to make sure that it is locked in position.

NOTE: The adjustable upper shoulder belt anchorage is equipped with an Easy Up feature. This feature allows the shoulder belt anchorage to be adjusted in the upward position without pushing or squeezing the release button. To verify the shoulder belt anchorage is latched, pull downward on the shoulder belt anchorage until it is locked into position.

WARNING!

- **Wearing your seat belt incorrectly could make your injuries in a collision much worse. You might suffer internal injuries, or you could even slide out of the**

(Continued)

WARNING! *(Continued)*

seat belt. Follow these instructions to wear your seat belt safely and to keep your passengers safe, too.

- **Position the shoulder belt across the shoulder and chest with minimal, if any slack so that it is comfortable and not resting on your neck. The retractor will withdraw any slack in the shoulder belt.**
- **Misadjustment of the seat belt could reduce the effectiveness of the safety belt in a crash.**

Seat Belt Extender

If a seat belt is not long enough to fit properly, even when the webbing is fully extended and the adjustable upper shoulder belt anchorage (if equipped) is in its lowest position, your authorized dealer can provide you with a Seat Belt Extender. The Seat Belt Extender should be used only if the existing seat belt is not long enough. When the Seat Belt Extender is not required for a different occupant, it must be removed.

WARNING!

- **ONLY use a Seat Belt Extender if it is physically required in order to properly fit the original seat belt system. DO NOT USE the Seat Belt Extender if, when worn, the distance between the front edge of the Seat Belt Extender buckle and the center of the occupant's body is LESS than 6 inches.**
- **Using a Seat Belt Extender when not needed can increase the risk of serious injury or death in a collision. Only use the Seat Belt Extender when the lap belt is not long enough and only use in the recommended seating positions. Remove and store the Seat Belt Extender when not needed.**

Seat Belts And Pregnant Women

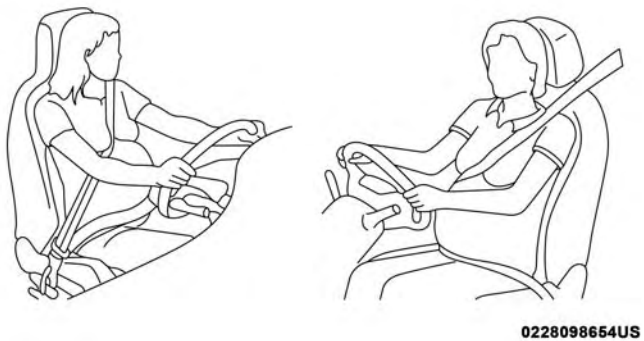

Pregnant Women And Seat Belts

Seat belts must be worn by all occupants including pregnant women: the risk of injury in the event of an accident is reduced for the mother and the unborn child if they are wearing a seat belt.

Position the lap belt snug and low below the abdomen and across the strong bones of the hips. Place the shoulder belt across the chest and away from the neck. Never place the shoulder belt behind the back or under the arm.

Seat Belt Pretensioner

The front seat belt system is equipped with pretensioning devices that are designed to remove slack from the seat belt in the event of a collision. These devices may improve the performance of the seat belt by removing slack from the seat belt early in a collision. Pretensioners work for all size occupants, including those in child restraints.

NOTE: These devices are not a substitute for proper seat belt placement by the occupant. The seat belt still must be worn snugly and positioned properly.

The pretensioners are triggered by the Occupant Restraint Controller (ORC). Like the air bags, the pretensioners are single use items. A deployed pretensioner or a deployed air bag must be replaced immediately.

Energy Management Feature

The front seat belt system is equipped with an Energy Management feature that may help further reduce the risk of injury in the event of a collision. The seat belt system has a retractor assembly that is designed to release webbing in a controlled manner.

Switchable Automatic Locking Retractor (ALR)

The seat belts in the passenger seating positions are equipped with a Switchable Automatic Locking Retractor (ALR) which is used to secure a child restraint system. For additional information, refer to "Installing Child Restraints Using The Vehicle Seat Belt" under the "Child Restraints" section of this manual. The figure below illustrates the locking feature for each seating position.

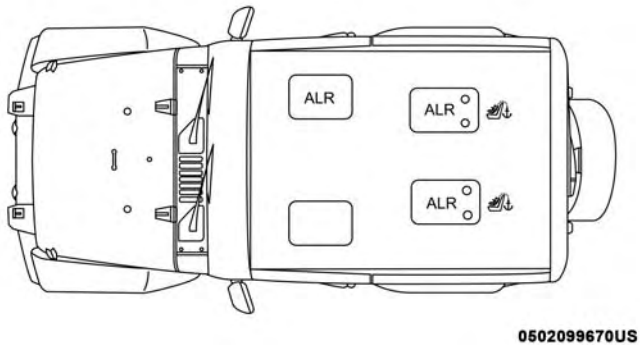

ALR — Switchable Automatic Locking Retractor (Two-Door Models)

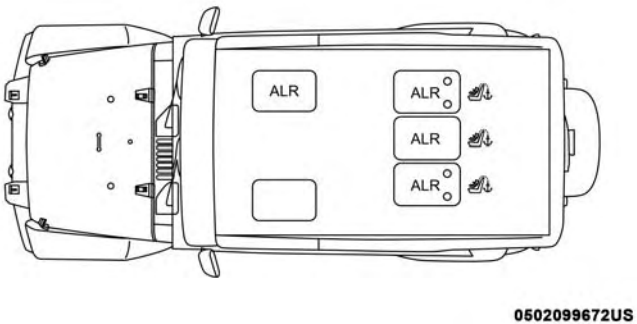

ALR — Switchable Automatic Locking Retractor (Four-Door Models)

If the passenger seating position is equipped with an ALR and is being used for normal usage, only pull the seat belt webbing out far enough to comfortably wrap around the occupant's mid-section so as to not activate the ALR. If the ALR is activated, you will hear a clicking sound as the seat belt retracts. Allow the webbing to retract completely in this case and then carefully pull out only the amount of webbing necessary to comfortably wrap around the occupant's mid-section. Slide the latch plate into the buckle until you hear a "click."

In Automatic Locking Mode, the shoulder belt is automatically pre-locked. The seat belt will still retract to remove any slack in the shoulder belt. Use the Automatic Locking Mode anytime a child restraint is installed in a seating position that has a seat belt with this feature. Children 12 years old and under should always be properly restrained in a vehicle with a rear seat.

WARNING!

- **Never place a rear-facing child restraint in front of an air bag. A deploying passenger front air bag can cause death or serious injury to a child 12 years or younger, including a child in a rear-facing child restraint.**
- **Only use a rear-facing child restraint in a vehicle with a rear seat.**

How To Engage The Automatic Locking Mode

1. Buckle the combination lap and shoulder belt.
2. Grasp the shoulder portion and pull downward until the entire seat belt is extracted.

3. Allow the seat belt to retract. As the seat belt retracts, you will hear a clicking sound. This indicates the seat belt is now in the Automatic Locking Mode.

How To Disengage The Automatic Locking Mode

Unbuckle the combination lap/shoulder belt and allow it to retract completely to disengage the Automatic Locking Mode and activate the vehicle sensitive (emergency) locking mode.

WARNING!

- **The seat belt assembly must be replaced if the switchable Automatic Locking Retractor (ALR) feature or any other seat belt function is not working properly when checked according to the procedures in the Service Manual.**
- **Failure to replace the seat belt assembly could increase the risk of injury in collisions.**
- **Do not use the Automatic Locking Mode to restrain occupants who are wearing the seat belt or children who are using booster seats. The locked mode is only used to install rear-facing or forward-facing child restraints that have a harness for restraining the child.**

Supplemental Restraint Systems (SRS)

Some of the safety features described in this section may be standard equipment on some models, or may be optional equipment on others. If you are not sure, ask your authorized dealer.

The air bag system must be ready to protect you in a collision. The Occupant Restraint Controller (ORC) monitors the internal circuits and interconnecting wiring associated with the electrical Air Bag System Components. Your vehicle may be equipped with the following Air Bag System Components:

Air Bag System Components

- Occupant Restraint Controller (ORC)
- Air Bag Warning Light
- Steering Wheel and Column
- Instrument Panel
- Knee Impact Bolsters
- Driver and Front Passenger Air Bags
- Seat Belt Buckle Switch
- Supplemental Side Air Bags

- Front and Side Impact Sensors
- Seat Belt Pretensioners
- Seat Track Position Sensors

Air Bag Warning Light

The ORC monitors the readiness of the electronic parts of the air bag system whenever the ignition switch is in the START or ON/RUN position. If the ignition switch is in the OFF position or in the ACC position, the air bag system is not on and the air bags will not inflate.

The ORC contains a backup power supply system that may deploy the air bag system even if the battery loses power or it becomes disconnected prior to deployment.

The ORC turns on the Air Bag Warning Light in the instrument panel for approximately four to eight seconds for a self-check when the ignition switch is first in the ON/RUN position. After the self-check, the Air Bag Warning Light will turn off. If the ORC detects a malfunction in any part of the system, it turns on the Air Bag Warning Light, either momentarily or continuously. A single chime will sound to alert you if the light comes on again after initial startup.

The ORC also includes diagnostics that will illuminate the instrument panel Air Bag Warning Light if a malfunction is detected that could affect the air bag system. The diagnostics also record the nature of the malfunction. While the air bag system is designed to be maintenance free, if any of the following occurs, have an authorized dealer service the air bag system immediately.

- The Air Bag Warning Light does not come on during the four to eight seconds when the ignition switch is first in the ON/RUN position.
- The Air Bag Warning Light remains on after the four to eight-second interval.
- The Air Bag Warning Light comes on intermittently or remains on while driving.

NOTE: If the speedometer, tachometer, or any engine related gauges are not working, the Occupant Restraint Controller (ORC) may also be disabled. In this condition the air bags may not be ready to inflate for your protection. Have an authorized dealer service the air bag system immediately.

WARNING!

Ignoring the Air Bag Warning Light in your instrument panel could mean you won't have the air bag system to protect you in a collision. If the light does not come on as a bulb check when the ignition is first turned on, stays on after you start the vehicle, or if it comes on as you drive, have an authorized dealer service the air bag system immediately.

Front Air Bags

This vehicle has front air bags and lap/shoulder belts for both the driver and front passenger. The front air bags are a supplement to the seat belt restraint systems. The driver front air bag is mounted in the center of the steering wheel. The passenger front air bag is mounted in the instrument panel, above the glove compartment. The words "SRS AIRBAG" or "AIRBAG" are embossed on the air bag covers.

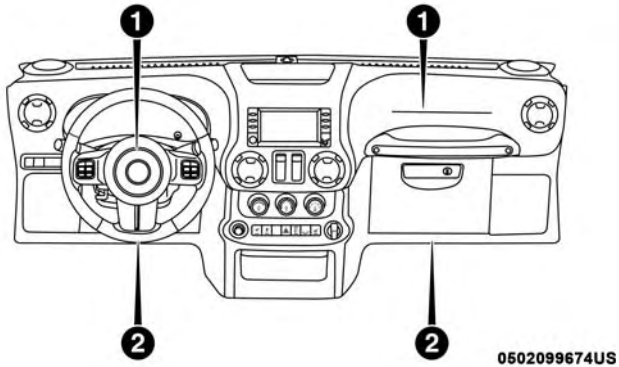

Front Air Bag/Knee Impact Bolster Locations

1 — Driver And Passenger Front Air Bags
2 — Driver And Passenger Knee Impact Bolster

WARNING!

- **Being too close to the steering wheel or instrument panel during front air bag deployment could cause serious injury, including death. Air bags need room to inflate. Sit back, comfortably extending your arms to reach the steering wheel or instrument panel.**

(Continued)

WARNING! ***(Continued)***

- **Never place a rear-facing child restraint in front of an air bag. A deploying passenger front air bag can cause death or serious injury to a child 12 years or younger, including a child in a rear-facing child restraint.**
- **Only use a rear-facing child restraint in a vehicle with a rear seat.**

Driver And Passenger Front Air Bag Features

The Advanced Front Air Bag system has multistage driver and front passenger air bags. This system provides output appropriate to the severity and type of collision as determined by the Occupant Restraint Controller (ORC), which may receive information from the front impact sensors (if equipped) or other system components.

The first stage inflator is triggered immediately during an impact that requires air bag deployment. A low energy output is used in less severe collisions. A higher energy output is used for more severe collisions.

This vehicle may be equipped with a driver and/or front passenger seat belt buckle switch that detects whether the driver or front passenger seat belt is buckled. The seat belt buckle switch may adjust the inflation rate of the Advanced Front Air Bags.

This vehicle may be equipped with driver and/or front passenger seat track position sensors that may adjust the inflation rate of the Advanced Front Air Bags based upon seat position.

WARNING!

- **No objects should be placed over or near the air bag on the instrument panel or steering wheel because any such objects could cause harm if the vehicle is in a collision severe enough to cause the air bag to inflate.**
- **Do not put anything on or around the air bag covers or attempt to open them manually. You may damage the air bags and you could be injured because the air bags may no longer be functional. The protective covers for the air bag cushions are designed to open only when the air bags are inflating.**

(Continued)

WARNING! ***(Continued)***

- **Relying on the air bags alone could lead to more severe injuries in a collision. The air bags work with your seat belt to restrain you properly. In some collisions, air bags won't deploy at all. Always wear your seat belts even though you have air bags.**

Front Air Bag Operation

Front Air Bags are designed to provide additional protection by supplementing the seat belts. Front air bags are not expected to reduce the risk of injury in rear, side, or rollover collisions. The front air bags will not deploy in all frontal collisions, including some that may produce substantial vehicle damage — for example, some pole collisions, truck underrides, and angle offset collisions.

On the other hand, depending on the type and location of impact, front air bags may deploy in crashes with little vehicle front-end damage but that produce a severe initial deceleration.

Because air bag sensors measure vehicle deceleration over time, vehicle speed and damage by themselves are not good indicators of whether or not an air bag should have deployed.

Seat belts are necessary for your protection in all collisions, and also are needed to help keep you in position, away from an inflating air bag.

When the ORC detects a collision requiring the front air bags, it signals the inflator units. A large quantity of non-toxic gas is generated to inflate the front air bags.

The steering wheel hub trim cover and the upper right side of the instrument panel separate and fold out of the way as the air bags inflate to their full size. The front air bags fully inflate in less time than it takes to blink your eyes. The front air bags then quickly deflate while helping to restrain the driver and front passenger.

Knee Impact Bolsters

The Knee Impact Bolsters help protect the knees of the driver and front passenger, and position the front occupants for improved interaction with the front air bags.

WARNING!

- **Do not drill, cut, or tamper with the knee impact bolsters in any way.**
- **Do not mount any accessories to the knee impact bolsters such as alarm lights, stereos, citizen band radios, etc.**

Supplemental Side Air Bags

Supplemental Seat-Mounted Side Air Bags (SABs)

This vehicle is equipped with Supplemental Seat-Mounted Side Air Bags (SABs).

Supplemental Seat-Mounted Side Air Bags (SABs) are located in the outboard side of the front seats. The SABs are marked with a "SRS AIRBAG" or "AIRBAG" label sewn into the outboard side of the seats.

The SABs may help to reduce the risk of occupant injury during certain side impacts, in addition to the injury reduction potential provided by the seat belts and body structure.

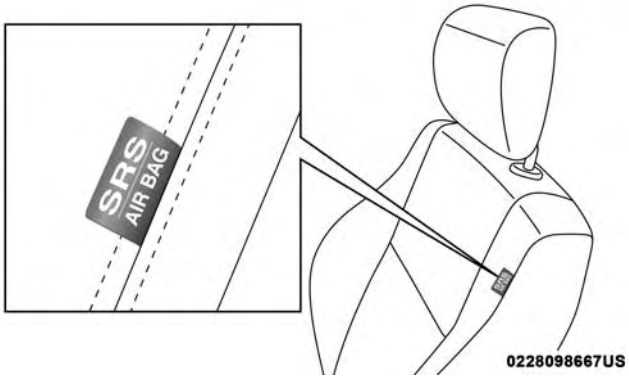

Supplemental Seat-Mounted Side Air Bag Location

When the SAB deploys, it opens the seam on the outboard side of the seatback's trim cover. The inflating SAB deploys through the seat seam into the space between the occupant and the door. The SAB moves at a very high speed and with such a high force that it could injure occupants if they are not seated properly, or if items are positioned in the area where the SAB inflates. Children are at an even greater risk of injury from a deploying air bag.

WARNING!

Do not use accessory seat covers or place objects between you and the Side Air Bags; the performance could be adversely affected and/or objects could be pushed into you, causing serious injury.

Side Impacts

The Side Air Bags are designed to activate in certain side impacts. The Occupant Restraint Controller (ORC) determines whether the deployment of the Side Air Bags in a particular impact event is appropriate, based on the severity and type of collision. The side impact sensors aid the ORC in determining the appropriate response to impact events. The system is calibrated to deploy the Side Air Bags on the impact side of the vehicle during impacts that require Side Air Bag occupant protection. In side impacts, the Side Air Bags deploy independently; a left side impact deploys the left Side Air Bags only and a right-side impact deploys the right Side Air Bags only. Vehicle damage by itself is not a good indicator of whether or not Side Air Bags should have deployed.

The Side Air Bags will not deploy in all side collisions, including some collisions at certain angles, or some side collisions that do not impact the area of the passenger compartment. The Side Air Bags may deploy during angled or offset frontal collisions where the front air bags deploy.

Side Air Bags are a supplement to the seat belt restraint system. Side Air Bags deploy in less time than it takes to blink your eyes.

WARNING!

- **Occupants, including children, who are up against or very close to Side Air Bags can be seriously injured or killed. Occupants, including children, should never lean on or sleep against the door, side windows, or area where the side air bags inflate, even if they are in an infant or child restraint.**
- **Seat belts (and child restraints where appropriate) are necessary for your protection in all collisions. They also help keep you in position, away from an inflating Side Air Bag. To get the best protection from the Side Air Bags, occupants must wear their seat belts properly and sit upright with their backs against the seats. Children must be properly restrained in a child restraint or booster seat that is appropriate for the size of the child.**

WARNING!

- **Side Air Bags need room to inflate. Do not lean against the door or window. Sit upright in the center of the seat.**
- **Being too close to the Side Air Bags during deployment could cause you to be severely injured or killed.**
- **Relying on the Side Air Bags alone could lead to more severe injuries in a collision. The Side Air Bags work with your seat belt to restrain you properly. In some collisions, Side Air Bags won't deploy at all. Always wear your seat belt even though you have Side Air Bags.**

NOTE: Air bag covers may not be obvious in the interior trim, but they will open during air bag deployment.

Air Bag System Components

The Occupant Restraint Controller (ORC) monitors the internal circuits and interconnecting wiring associated with electrical Air Bag System Components listed below:

- Occupant Restraint Controller (ORC)
- Air Bag Warning Light
- Steering Wheel and Column
- Instrument Panel
- Knee Impact Bolsters
- Driver and Front Passenger Air Bags
- Seat Belt Buckle Switch
- Supplemental Side Air Bags
- Front and Side Impact Sensors
- Seat Belt Pretensioners
- Seat Track Position Sensors

If A Deployment Occurs

The front air bags are designed to deflate immediately after deployment.

NOTE: Front and/or side air bags will not deploy in all collisions. This does not mean something is wrong with the air bag system.

If you do have a collision which deploys the air bags, any or all of the following may occur:

- The air bag material may sometimes cause abrasions and/or skin reddening to the occupants as the air bags deploy and unfold. The abrasions are similar to friction

rope burns or those you might get sliding along a carpet or gymnasium floor. They are not caused by contact with chemicals. They are not permanent and normally heal quickly. However, if you haven't healed significantly within a few days, or if you have any blistering, see your doctor immediately.

- As the air bags deflate, you may see some smoke-like particles. The particles are a normal by-product of the process that generates the non-toxic gas used for air bag inflation. These airborne particles may irritate the skin, eyes, nose, or throat. If you have skin or eye irritation, rinse the area with cool water. For nose or throat irritation, move to fresh air. If the irritation continues, see your doctor. If these particles settle on your clothing, follow the garment manufacturer's instructions for cleaning.

Do not drive your vehicle after the air bags have deployed. If you are involved in another collision, the air bags will not be in place to protect you.

WARNING!

Deployed air bags and seat belt pretensioners cannot protect you in another collision. Have the air bags, seat

(Continued)

WARNING! *(Continued)*

belt pretensioners, and the seat belt retractor assemblies replaced by an authorized dealer immediately. Also, have the Occupant Restraint Controller System serviced as well.

NOTE:

- Air bag covers may not be obvious in the interior trim, but they will open during air bag deployment.
- After any collision, the vehicle should be taken to an authorized dealer immediately.

Enhanced Accident Response System

In the event of an impact, if the communication network remains intact, and the power remains intact, depending on the nature of the event, the ORC will determine whether to have the Enhanced Accident Response System perform the following functions:

- Cut off fuel to the engine.
- Flash hazard lights as long as the battery has power or until the hazard light button is pressed. The hazard lights can be deactivated by pressing the hazard light button.

- Turn on the interior lights, which remain on as long as the battery has power.
- Unlock the power door locks.

Enhanced Accident Response System Reset Procedure

In order to reset the Enhanced Accident Response System functions after an event, the ignition switch must be changed from ignition START or ON/RUN to ignition OFF. Carefully check the vehicle for fuel leaks in the engine compartment and on the ground near the engine compartment and fuel tank before resetting the system and starting the engine.

Maintaining Your Air Bag System

WARNING!

- **Modifications to any part of the air bag system could cause it to fail when you need it. You could be injured if the air bag system is not there to protect you. Do not modify the components or wiring, including adding any kind of badges or stickers to the steering wheel hub trim cover or the upper right side**

(Continued)

WARNING! *(Continued)*

of the instrument panel. Do not modify the front bumper, vehicle body structure, or add aftermarket side steps or running boards.

- **It is dangerous to try to repair any part of the air bag system yourself. Be sure to tell anyone who works on your vehicle that it has an air bag system.**
- **Do not attempt to modify any part of your air bag system. The air bag may inflate accidentally or may not function properly if modifications are made. Take your vehicle to an authorized dealer for any air bag system service. If your seat, including your trim cover and cushion, needs to be serviced in any way (including removal or loosening/tightening of seat attachment bolts), take the vehicle to your authorized dealer. Only manufacturer approved seat accessories may be used. If it is necessary to modify the air bag system for persons with disabilities, contact your authorized dealer.**

Event Data Recorder (EDR)

This vehicle is equipped with an event data recorder (EDR). The main purpose of an EDR is to record, in certain crash or near crash-like situations, such as an air bag deployment or hitting a road obstacle, data that will assist in understanding how a vehicle's systems performed. The EDR is designed to record data related to vehicle dynamics and safety systems for a short period of time, typically 30 seconds or less. The EDR in this vehicle is designed to record such data as:

- How various systems in your vehicle were operating;
- Whether or not the driver and passenger safety belts were buckled/fastened;
- How far (if at all) the driver was depressing the accelerator and/or brake pedal; and,
- How fast the vehicle was traveling.

These data can help provide a better understanding of the circumstances in which crashes and injuries occur.

NOTE: EDR data are recorded by your vehicle only if a non-trivial crash situation occurs; no data are recorded by the EDR under normal driving conditions and no personal data (e.g., name, gender, age, and crash location) are recorded. However, other parties, such as law enforcement, could combine the EDR data with the type of personally identifying data routinely acquired during a crash investigation.

To read data recorded by an EDR, special equipment is required, and access to the vehicle or the EDR is needed. In addition to the vehicle manufacturer, other parties, such as law enforcement, that have the special equipment, can read the information if they have access to the vehicle or the EDR.

Child Restraints

Everyone in your vehicle needs to be buckled up at all times, including babies and children. Every state in the United States, and every Canadian province, requires that small children ride in proper restraint systems. This is the law, and you can be prosecuted for ignoring it.

Children 12 years or younger should ride properly buckled up in a rear seat, if available. According to crash statistics, children are safer when properly restrained in the rear seats rather than in the front.

WARNING!

In a collision, an unrestrained child can become a projectile inside the vehicle. The force required to hold even an infant on your lap could become so great that you could not hold the child, no matter how strong you are. The child and others could be badly injured or killed. Any child riding in your vehicle should be in a proper restraint for the child's size.

There are different sizes and types of restraints for children from newborn size to the child almost large enough for an adult safety belt. Always check the child seat Owner's Manual to make sure you have the correct seat for your child. Carefully read and follow all the instructions and warnings in the child restraint Owner's Manual and on all the labels attached to the child restraint.

Before buying any restraint system, make sure that it has a label certifying that it meets all applicable Safety Standards. You should also make sure that you can install it in the vehicle where you will use it.

NOTE:

- For additional information, refer to www.safercar.gov/parents/index.htm or call: 1–888–327–4236
- Canadian residents should refer to Transport Canada's website for additional information: http://www.tc.gc.ca/eng/motorvehiclesafety/safedrivers-childsafety-index-53.htm

Summary Of Recommendations For Restraining Children In Vehicles

	Child Size, Height, Weight Or Age	Recommended Type Of Child Restraint
Infants and Toddlers	Children who are two years old or younger and who have not reached the height or weight limits of their child restraint	Either an Infant Carrier or a Convertible Child Restraint, facing rearward in the rear seat of the vehicle
Small Children	Children who are at least two years old or who have outgrown the height or weight limit of their rear-facing child restraint	Forward-Facing Child Restraint with a five-point Harness, facing forward in the rear seat of the vehicle
Larger Children	Children who have outgrown their forward-facing child restraint, but are too small to properly fit the vehicle's seat belt	Belt Positioning Booster Seat and the vehicle seat belt, seated in the rear seat of the vehicle
Children Too Large for Child Restraints	Children 12 years old or younger, who have outgrown the height or weight limit of their booster seat	Vehicle Seat Belt, seated in the rear seat of the vehicle

Infant And Child Restraints

Safety experts recommend that children ride rear-facing in the vehicle until they are two years old or until they reach either the height or weight limit of their rear-facing child restraint. Two types of child restraints can be used rear-facing: infant carriers and convertible child seats.

The infant carrier is only used rear-facing in the vehicle. It is recommended for children from birth until they reach the weight or height limit of the infant carrier. Convertible

child seats can be used either rear-facing or forward-facing in the vehicle. Convertible child seats often have a higher weight limit in the rear-facing direction than infant carriers do, so they can be used rear-facing by children who have outgrown their infant carrier but are still less than at least two years old. Children should remain rear-facing until they reach the highest weight or height allowed by their convertible child seat.

WARNING!

- **Never place a rear-facing child restraint in front of an air bag. A deploying passenger front air bag can cause death or serious injury to a child 12 years or younger, including a child in a rear-facing child restraint.**
- **Only use a rear-facing child restraint in a vehicle with a rear seat.**

Older Children And Child Restraints

Children who are two years old or who have outgrown their rear-facing convertible child seat can ride forward-facing in the vehicle. Forward-facing child seats and convertible child seats used in the forward-facing direction are for children who are over two years old or who have outgrown the rear-facing weight or height limit of their rear-facing convertible child seat. Children should remain in a forward-facing child seat with a harness for as long as possible, up to the highest weight or height allowed by the child seat.

All children whose weight or height is above the forward-facing limit for the child seat should use a belt-positioning booster seat until the vehicle's seat belts fit properly. If the child cannot sit with knees bent over the vehicle's seat cushion while the child's back is against the seatback, they should use a belt-positioning booster seat. The child and belt-positioning booster seat are held in the vehicle by the seat belt.

WARNING!

- **Improper installation can lead to failure of an infant or child restraint. It could come loose in a collision. The child could be badly injured or killed. Follow the child restraint manufacturer's directions exactly when installing an infant or child restraint.**
- **After a child restraint is installed in the vehicle, do not move the vehicle seat forward or rearward because it can loosen the child restraint attachments.**

(Continued)

WARNING! *(Continued)*

Remove the child restraint before adjusting the vehicle seat position. When the vehicle seat has been adjusted, reinstall the child restraint.

- **When your child restraint is not in use, secure it in the vehicle with the seat belt or LATCH anchorages, or remove it from the vehicle. Do not leave it loose in the vehicle. In a sudden stop or accident, it could strike the occupants or seatbacks and cause serious personal injury.**

Children Too Large For Booster Seats

Children who are large enough to wear the shoulder belt comfortably, and whose legs are long enough to bend over the front of the seat when their back is against the seatback, should use the seat belt in a rear seat. Use this simple 5-step test to decide whether the child can use the vehicle's seat belt alone:

1. Can the child sit all the way back against the back of the vehicle seat?
2. Do the child's knees bend comfortably over the front of the vehicle seat – while the child is still sitting all the way back?
3. Does the shoulder belt cross the child's shoulder between their neck and arm?
4. Is the lap part of the belt as low as possible, touching the child's thighs and not the stomach?
5. Can the child stay seated like this for the whole trip?

If the answer to any of these questions was "no," then the child still needs to use a booster seat in this vehicle. If the child is using the lap/shoulder belt, check seat belt fit periodically and make sure the seat belt buckle is latched. A child's squirming or slouching can move the belt out of position. If the shoulder belt contacts the face or neck, move the child closer to the center of the vehicle, or use a booster seat to position the seat belt on the child correctly.

WARNING!

Never allow a child to put the shoulder belt under an arm or behind their back. In a crash, the shoulder belt will not protect a child properly, which may result in serious injury or death. A child must always wear both the lap and shoulder portions of the seat belt correctly.

Recommendations For Attaching Child Restraints

Restraint Type	Combined Weight of the Child + Child Restraint	Use Any Attachment Method Shown With An "X" Below			
		LATCH – Lower Anchors Only	Seat Belt Only	LATCH – Lower Anchors + Top Tether Anchor	Seat Belt + Top Tether Anchor
Rear-Facing Child Restraint	Up to 65 lbs (29.5 kg)	X	X		
Rear-Facing Child Restraint	More than 65 lbs (29.5 kg)		X		
Forward-Facing Child Restraint	Up to 65 lbs (29.5 kg)			X	X
Forward-Facing Child Restraint	More than 65 lbs (29.5 kg)				X

Lower Anchors And Tethers For CHildren (LATCH) Restraint System

LATCH Label

Your vehicle is equipped with the child restraint anchorage system called LATCH, which stands for Lower Anchors and Tethers for CHildren. The LATCH system has three vehicle anchor points for installing LATCH-equipped child seats. There are two lower anchorages located at the back of the seat cushion where it meets the seatback and one top tether anchorage located behind the seating position. These anchorages are used to install LATCH-equipped child seats without using the vehicle's seat belts. Some seating positions may have a top tether anchorage but no lower anchorages. In these seating positions, the seat belt must be used with the top tether anchorage to install the child restraint. Please see the following table for more information.

LATCH Positions For Installing Child Restraints In This Vehicle

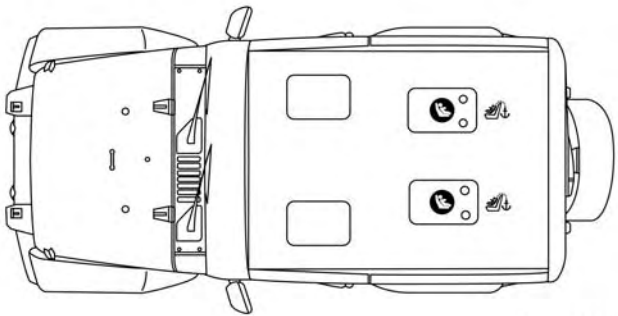

0502099676US

LATCH Positions (Two-Door Models)

Lower Anchorage Symbol (2 Anchorages Per Seating Position)
Top Tether Anchorage Symbol

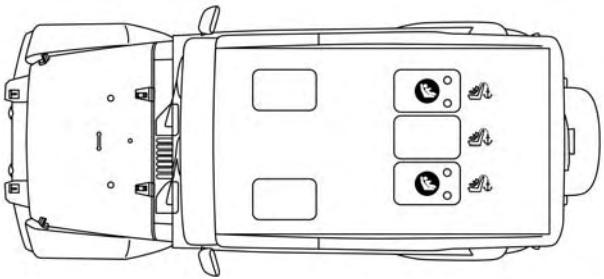

0502099678US

LATCH Positions (Four-Door Models)

Lower Anchorage Symbol (2 Anchorages Per Seating Position)
Top Tether Anchorage Symbol

Frequently Asked Questions About Installing Child Restraints With LATCH		
What is the weight limit (child's weight + weight of the child restraint) for using the LATCH anchorage system to attach the child restraint?	65 lbs (29.5 kg)	Use the LATCH anchorage system until the combined weight of the child and the child restraint is 65 lbs (29.5 kg). Use the seat belt and tether anchor instead of the LATCH system once the combined weight is more than 65 lbs (29.5 kg).
Can the LATCH anchorages and the seat belt be used together to attach a rear-facing or forward-facing child restraint?	No	Do not use the seat belt when you use the LATCH anchorage system to attach a rear-facing or forward-facing child restraint. Booster seats may be attached to the LATCH anchorages if allowed by the booster seat manufacturer. See your booster seat owner's manual for more information.
Can a child seat be installed in the center position using the inner LATCH lower anchorages?	Yes	Four Door Only: You can install child restraints with flexible lower anchors in the center position. The inner anchorages are 19 inches (484 mm) apart. Do not install child restraints with rigid lower anchors in the center position.

Frequently Asked Questions About Installing Child Restraints With LATCH		
Can two child restraints be attached using a common lower LATCH anchorage?	No	Never “share” a LATCH anchorage with two or more child restraints. If the center position does not have dedicated LATCH lower anchorages, use the seat belt to install a child seat in the center position next to a child seat using the LATCH anchorages in an outboard position.
Can the rear-facing child restraint touch the back of the front passenger seat?	Yes	The child seat may touch the back of the front passenger seat if the child restraint manufacturer also allows contact. See your child restraint owner’s manual for more information.
Can the head restraints be removed?	No — Four Door Yes — Two Door	Two Door Models — All

Locating The LATCH Anchorages

The lower anchorages are round bars that are found at the rear of the seat cushion where it meets the seatback, below the anchorage symbols on the seatback. They are just visible when you lean into the rear seat to install the child restraint. You will easily feel them if you run your finger along the gap between the seatback and seat cushion.

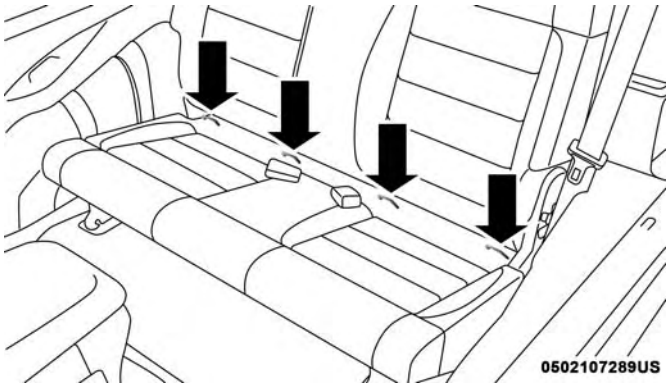

LATCH Anchorages (Two-Door Models)

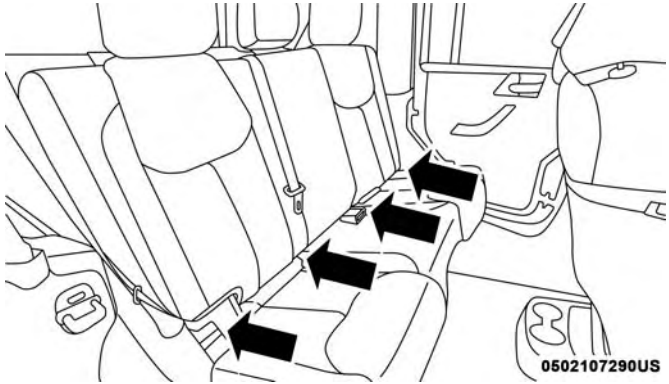

LATCH Anchorages (Four-Door Models)

Locating The Upper Tether Anchorages

There are tether strap anchorages behind each rear seating position located on the back of the seat, near the floor.

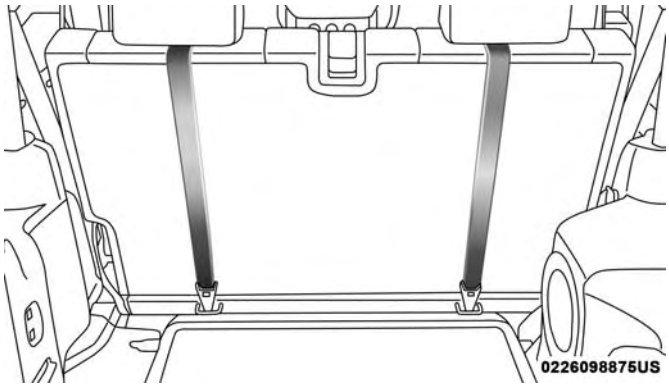

Tether Strap Anchorages (Two-Door Models)

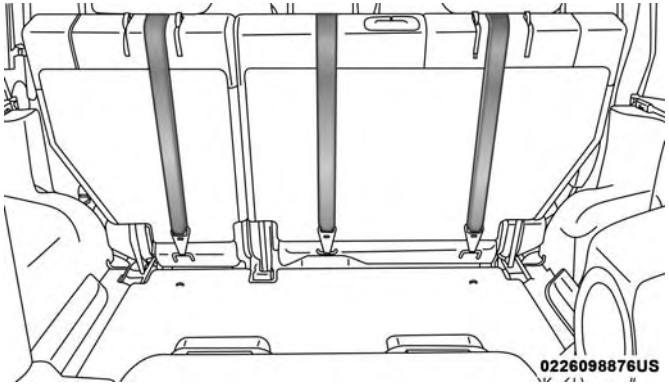

Tether Strap Anchorages (Four-Door Models)

LATCH-compatible child restraint systems will be equipped with a rigid bar or a flexible strap on each side. Each will have a hook or connector to attach to the lower anchorage and a way to tighten the connection to the anchorage. Forward-facing child restraints and some rear-facing child restraints will also be equipped with a tether strap. The tether strap will have a hook at the end to attach to the top tether anchorage and a way to tighten the strap after it is attached to the anchorage.

Center Seat LATCH: Two Door

WARNING!

This vehicle does not have a center seating position. Do not use the center lower LATCH anchorages to install a child seat in the center of the back seat.

Center Seat LATCH: Four Door

Do not install child restraints with rigid lower attachments in the center seating position. Only install this type of child restraint in the outboard seating positions. Child restraints with flexible, webbing mounted lower attachments can be installed in any rear seating position.

WARNING!

Never use the same lower anchorage to attach more than one child restraint. If you are installing LATCH-compatible child restraints next to each other, you must use the seat belt for the center position. You can then use either the LATCH anchors or the vehicle's seat belt for installing child seats in the outboard positions. Please refer to "Installing The LATCH-Compatible Child Restraint System" for typical installation instructions.

Always follow the directions of the child restraint manufacturer when installing your child restraint. Not all child restraint systems will be installed as described here.

To Install A LATCH-Compatible Child Restraint

If the selected seating position has a Switchable Automatic Locking Retractor (ALR) seat belt, stow the seat belt, following the instructions below. See the section "Installing Child Restraints Using the Vehicle Seat Belt" to check what type of seat belt each seating position has.

1. Loosen the adjusters on the lower straps and on the tether strap of the child seat so that you can more easily attach the hooks or connectors to the vehicle anchorages.
2. Place the child seat between the lower anchorages for that seating position. For some second row seats, you may need to recline the seat and / or raise the head restraint to get a better fit. If the rear seat can be moved forward and rearward in the vehicle, you may wish to move it to its rear-most position to make room for the child seat. You may also move the front seat forward to allow more room for the child seat.

3. Attach the lower hooks or connectors of the child restraint to the lower anchorages in the selected seating position.
4. If the child restraint has a tether strap, connect it to the top tether anchorage. See the section "Installing Child Restraints Using the Top Tether Anchorage" for directions to attach a tether anchor.
5. Tighten all of the straps as you push the child restraint rearward and downward into the seat. Remove slack in the straps according to the child restraint manufacturer's instructions.
6. Test that the child restraint is installed tightly by pulling back and forth on the child seat at the belt path. It should not move more than 1 inch (25.4 mm) in any direction.

How To Stow An Unused Switchable-ALR (ALR) Seat Belt:

When using the LATCH attaching system to install a child restraint, stow all ALR seat belts that are not being used by other occupants or being used to secure child restraints. An unused belt could injure a child if they play with it and accidentally lock the seat belt retractor. Before installing a child restraint using the LATCH system, buckle the seat belt behind the child restraint and out of the child's reach. If the buckled seat belt interferes with the child restraint installation, instead of buckling it behind the child restraint, route the seat belt through the child restraint belt path and then buckle it. Do not lock the seat belt. Remind all children in the vehicle that the seat belts are not toys and that they should not play with them.

WARNING!

- **Improper installation of a child restraint to the LATCH anchorages can lead to failure of the restraint. The child could be badly injured or killed. Follow the child restraint manufacturer's directions exactly when installing an infant or child restraint.**
- **Child restraint anchorages are designed to withstand only those loads imposed by correctly-fitted child restraints. Under no circumstances are they to be used for adult seat belts, harnesses, or for attaching other items or equipment to the vehicle.**

Installing Child Restraints Using The Vehicle Seat Belt

Child restraint systems are designed to be secured in vehicle seats by lap belts or the lap belt portion of a lap/shoulder belt.

WARNING!

- **Improper installation or failure to properly secure a child restraint can lead to failure of the restraint. The child could be badly injured or killed.**
- **Follow the child restraint manufacturer's directions exactly when installing an infant or child restraint.**

The seat belts in the passenger seating positions are equipped with a Switchable Automatic Locking Retractor (ALR) that is designed to keep the lap portion of the seat belt tight around the child restraint so that it is not necessary to use a locking clip. The ALR retractor can be "switched" into a locked mode by pulling all of the webbing out of the retractor and then letting the webbing retract back into the retractor. If it is locked, the ALR will make a clicking noise while the webbing is pulled back into the retractor. Refer to the "Automatic Locking Mode" description in "Switchable Automatic Locking Retractors (ALR)" under "Occupant Restraint Systems" for additional information on ALR.

Please see the table below and the following sections for more information.

Lap/Shoulder Belt Systems For Installing Child Restraints In This Vehicle

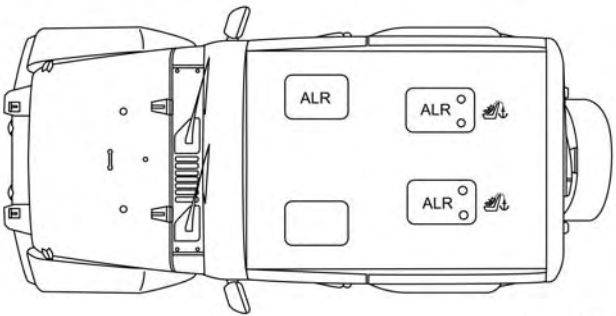

0502099670US

Automatic Locking Retractor (ALR) Locations (Two-Door Models)

ALR = Switchable Automatic Locking Retractor
Top Tether Anchorage Symbol

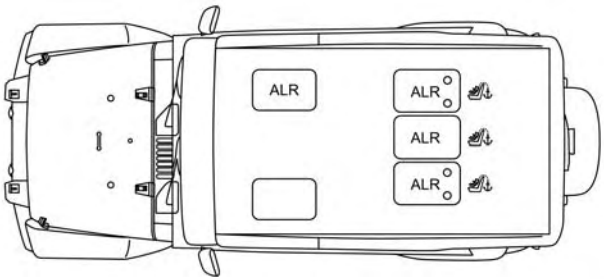

0502099672US

Automatic Locking Retractor (ALR) Locations (Four-Door Models)

ALR = Switchable Automatic Locking Retractor
Top Tether Anchorage Symbol

Frequently Asked Questions About Installing Child Restraints With Seat Belts		
What is the weight limit (child's weight + weight of the child restraint) for using the Tether Anchor with the seat belt to attach a forward facing child restraint?	Weight limit of the Child Restraint	Always use the tether anchor when using the seat belt to install a forward facing child restraint, up to the recommended weight limit of the child restraint.
Can the rear-facing child restraint touch the back of the front passenger seat?	Yes	Contact between the front passenger seat and the child restraint is allowed, if the child restraint manufacturer also allows contact.
Can the head restraints be removed?	No — Four Door Yes — Two Door	All — Two Door
Can the buckle stalk be twisted to tighten the seat belt against the belt path of the child restraint?	No	Do not twist the buckle stalk in a seating position with an ALR retractor.

Installing A Child Restraint With A Switchable Automatic Locking Retractor (ALR):

Child restraint systems are designed to be secured in vehicle seats by lap belts or the lap belt portion of a lap/shoulder belt.

WARNING!

- **Improper installation or failure to properly secure a child restraint can lead to failure of the restraint. The child could be badly injured or killed.**
- **Follow the child restraint manufacturer's directions exactly when installing an infant or child restraint.**

1. Place the child seat in the center of the seating position. For some second row seats, you may need to recline the seat and/or raise the head restraint to get a better fit. If the rear seat can be moved forward and rearward in the vehicle, you may wish to move it to its rear-most position to make room for the child seat. You may also move the front seat forward to allow more room for the child seat.
2. Pull enough of the seat belt webbing from the retractor to pass it through the belt path of the child restraint. Do not twist the belt webbing in the belt path.
3. Slide the latch plate into the buckle until you hear a "click."
4. Pull on the webbing to make the lap portion tight against the child seat.
5. To lock the seat belt, pull down on the shoulder part of the belt until you have pulled all the seat belt webbing out of the retractor. Then, allow the webbing to retract back into the retractor. As the webbing retracts, you will hear a clicking sound. This means the seat belt is now in the Automatic Locking mode.
6. Try to pull the webbing out of the retractor. If it is locked, you should not be able to pull out any webbing. If the retractor is not locked, repeat step 5.
7. Finally, pull up on any excess webbing to tighten the lap portion around the child restraint while you push the child restraint rearward and downward into the vehicle seat.
8. If the child restraint has a top tether strap and the seating position has a top tether anchorage, connect the tether strap to the anchorage and tighten the tether strap. See the section "Installing Child Restraints Using the Top Tether Anchorage" for directions to attach a tether anchor.
9. Test that the child restraint is installed tightly by pulling back and forth on the child seat at the belt path. It should not move more than 1 inch (25.4 mm) in any direction.

Any seat belt system will loosen with time, so check the belt occasionally, and pull it tight if necessary.

Installing Child Restraints Using The Top Tether Anchorage

WARNING!

Do not attach a tether strap for a rear-facing car seat to any location in front of the car seat, including the seat frame or a tether anchorage. Only attach the tether strap of a rear-facing car seat to the tether anchorage that is approved for that seating position, located behind the top of the vehicle seat. See the section "Lower Anchors and Tethers for CHildren (LATCH) Restraint System" for the location of approved tether anchorages in your vehicle.

1. Look behind the seating position where you plan to install the child restraint to find the tether anchorage. You may need to move the seat forward to provide better access to the tether anchorage. If there is no top tether anchorage for that seating position, move the child restraint to another position in the vehicle if one is available.
2. Route the tether strap to provide the most direct path for the strap between the anchor and the child seat. If your vehicle is equipped with adjustable rear head restraints, raise the head restraint, and where possible, route the tether strap under the head restraint and between the two posts. If not possible, lower the head restraint and pass the tether strap around the outboard side of the head restraint.

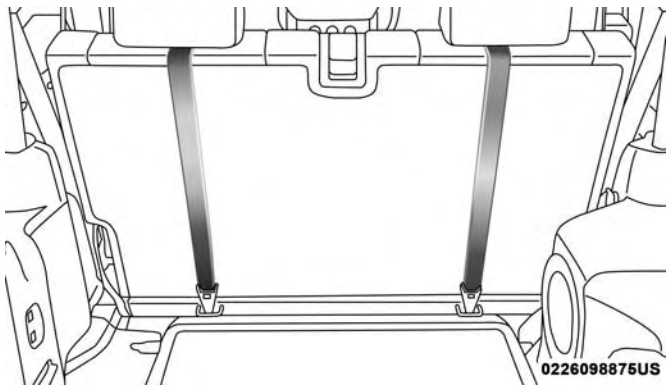

Tether Strap Mounting (Two-Door Models)

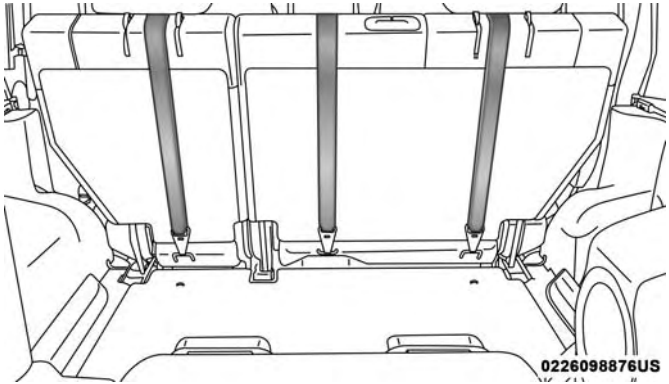

Tether Strap Mounting (Four-Door Models)

3. Attach the tether strap hook of the child restraint to the top tether anchorage as shown in the diagram.
4. Remove slack in the tether strap according to the child restraint manufacturer's instructions.

WARNING!

- **An incorrectly anchored tether strap could lead to increased head motion and possible injury to the child. Use only the anchorage position directly behind the child seat to secure a child restraint top tether strap.**
- **If your vehicle is equipped with a split rear seat, make sure the tether strap does not slip into the opening between the seatbacks as you remove slack in the strap.**

Transporting Pets

Air Bags deploying in the front seat could harm your pet. An unrestrained pet will be thrown about and possibly injured, or injure a passenger during panic braking or in a collision.

Pets should be restrained in the rear seat in pet harnesses or pet carriers that are secured by seat belts.

SAFETY TIPS

Transporting Passengers

NEVER TRANSPORT PASSENGERS IN THE CARGO AREA.

WARNING!

- **Do not leave children or animals inside parked vehicles in hot weather. Interior heat build-up may cause serious injury or death.**
- **It is extremely dangerous to ride in a cargo area, inside or outside of a vehicle. In a collision, people riding in these areas are more likely to be seriously injured or killed.**
- **Do not allow people to ride in any area of your vehicle that is not equipped with seats and seat belts.**
- **Be sure everyone in your vehicle is in a seat and using a seat belt properly.**

Exhaust Gas

WARNING!

Exhaust gases can injure or kill. They contain carbon monoxide (CO), which is colorless and odorless. Breathing it can make you unconscious and can eventually poison you. To avoid breathing (CO), follow these safety tips:

- **Do not run the engine in a closed garage or in confined areas any longer than needed to move your vehicle in or out of the area.**
- **If you are required to drive with the trunk/liftgate/rear doors open, make sure that all windows are closed and the climate control BLOWER switch is set at high speed. DO NOT use the recirculation mode.**
- **If it is necessary to sit in a parked vehicle with the engine running, adjust your heating or cooling controls to force outside air into the vehicle. Set the blower at high speed.**

The best protection against carbon monoxide entry into the vehicle body is a properly maintained engine exhaust system.

Whenever a change is noticed in the sound of the exhaust system, when exhaust fumes can be detected inside the vehicle, or when the underside or rear of the vehicle is damaged, have a competent mechanic inspect the complete exhaust system and adjacent body areas for broken, damaged, deteriorated, or mispositioned parts. Open seams or loose connections could permit exhaust fumes to seep into the passenger compartment. In addition, inspect the exhaust system each time the vehicle is raised for lubrication or oil change. Replace as required.

Safety Checks You Should Make Inside The Vehicle

Seat Belts

Inspect the seat belt system periodically, checking for cuts, frays, and loose parts. Damaged parts must be replaced immediately. Do not disassemble or modify the system.

Front seat belt assemblies must be replaced after a collision. Rear seat belt assemblies must be replaced after a collision if they have been damaged (i.e., bent retractor, torn webbing, etc.). If there is any question regarding seat belt or retractor condition, replace the seat belt.

Air Bag Warning Light

The Air Bag warning light will turn on for four to eight seconds as a bulb check when the ignition switch is first turned to ON/RUN. If the light is either not on during starting, stays on, or turns on while driving, have the system inspected at an authorized dealer as soon as possible. This light will illuminate with a single chime when a fault with the Air Bag Warning Light has been detected, it will stay on until the fault is removed. If the light comes on intermittently or remains on while driving, have an authorized dealer service the vehicle immediately. Refer to “Occupant Restraint Systems” in “Safety” for further information.

Defroster

Check operation by selecting the defrost mode and place the blower control on high speed. You should be able to feel the air directed against the windshield. See your authorized dealer for service if your defroster is inoperable.

Floor Mat Safety Information

Always use floor mats designed to fit your vehicle. Only use a floor mat that does not interfere with the operation of the pedal assemblies. Only use a floor mat that is securely attached using the floor mat fasteners so it cannot slip out of position and interfere with the pedal assemblies or impair safe operation of your vehicle in other ways.

WARNING!

An improperly attached, damaged, folded, or stacked floor mat, or damaged floor mat fasteners may cause your floor mat to interfere with the accelerator, brake, or clutch pedals and cause a loss of vehicle control. To prevent SERIOUS INJURY or DEATH:

- **ALWAYS securely attach your floor mat using the floor mat fasteners. DO NOT install your floor mat upside down or turn your floor mat over. Lightly pull to confirm mat is secured using the floor mat fasteners on a regular basis.**
- **ALWAYS REMOVE THE EXISTING FLOOR MAT FROM THE VEHICLE before installing any other floor mat. NEVER install or stack an additional floor mat on top of an existing floor mat.**

(Continued)

WARNING! ***(Continued)***

- **ONLY install floor mats designed to fit your vehicle. NEVER install a floor mat that cannot be properly attached and secured to your vehicle. If a floor mat needs to be replaced, only use a FCA approved floor mat for the specific make, model, and year of your vehicle.**
- **ONLY use the driver's side floor mat on the driver's side floor area. To check for interference, with the vehicle properly parked with the engine off, fully depress the accelerator, the brake, and the clutch pedal (if present) to check for interference. If your floor mat interferes with the operation of any pedal, or is not secure to the floor, remove the floor mat from the vehicle and place the floor mat in your trunk.**
- **ONLY use the passenger's side floor mat on the passenger's side floor area.**
- **ALWAYS make sure objects cannot fall or slide into the driver's side floor area when the vehicle is moving. Objects can become trapped under accelerator, brake, or clutch pedals and could cause a loss of vehicle control.**

(Continued)

WARNING! *(Continued)*

- **NEVER place any objects under the floor mat (e.g., towels, keys, etc.). These objects could change the position of the floor mat and may cause interference with the accelerator, brake, or clutch pedals.**
- **If the vehicle carpet has been removed and re-installed, always properly attach carpet to the floor and check the floor mat fasteners are secure to the vehicle carpet. Fully depress each pedal to check for interference with the accelerator, brake, or clutch pedals then re-install the floor mats.**
- **It is recommended to only use mild soap and water to clean your floor mats. After cleaning, always check your floor mat has been properly installed and is secured to your vehicle using the floor mat fasteners by lightly pulling mat.**

Periodic Safety Checks You Should Make Outside The Vehicle

Tires

Examine tires for excessive tread wear and uneven wear patterns. Check for stones, nails, glass, or other objects lodged in the tread or sidewall. Inspect the tread for cuts and cracks. Inspect sidewalls for cuts, cracks, and bulges. Check the wheel nuts for tightness. Check the tires (including spare) for proper cold inflation pressure.

Lights

Have someone observe the operation of brake lights and exterior lights while you work the controls. Check turn signal and high beam indicator lights on the instrument panel.

Door Latches

Check for proper closing, latching, and locking.

Fluid Leaks

Check area under vehicle after overnight parking for fuel, coolant, oil, or other fluid leaks. Also, if gasoline fumes are detected or if fuel, or brake fluid leaks are suspected. The cause should be located and corrected immediately.

STARTING AND OPERATING

CONTENTS

■ STARTING THE ENGINE 275
- □ Manual Transmission — If Equipped 275
- □ Automatic Transmission — If Equipped 275
- □ Normal Starting 275
- □ Extreme Cold Weather (Below –22°F Or –30°C) .276
- □ If Engine Fails To Start 276
- □ After Starting 277

■ ENGINE BLOCK HEATER — IF EQUIPPED 277

■ ENGINE BREAK-IN RECOMMENDATIONS 278

■ PARKING BRAKE 278

■ MANUAL TRANSMISSION — IF EQUIPPED . . .280
- □ Shifting 281
- □ Downshifting 282
- □ Reverse Shifting 283

■ AUTOMATIC TRANSMISSION — IF EQUIPPED .283
- □ Key Ignition Park Interlock 285
- □ Brake/Transmission Shift Interlock System 285
- □ Five-Speed Automatic Transmission — If Equipped 285
- □ Gear Ranges 286
- □ Autostick 290

■ FOUR–WHEEL DRIVE OPERATION (COMMAND-TRAC I OR ROCK-TRAC) 292
- □ Operating Instructions/Precautions 292
- □ Shift Positions 293
- □ Shifting Procedures 294
- □ Trac-Lok Rear Axle — If Equipped 295
- □ Axle Lock (Tru-Lok) — Rubicon Models 296
- □ Electronic Sway Bar Disconnect — If Equipped .296

■ POWER STEERING 298
□ Power Steering Fluid Check 299
■ SPEED CONTROL — IF EQUIPPED 299
□ To Activate 300
□ To Set A Desired Speed. 301
□ To Vary The Speed Setting 301
□ To Accelerate For Passing 302
□ To Resume Speed 302
□ To Deactivate 302
■ REFUELING THE VEHICLE 303
□ Fuel Filler Cap 303
□ Loose Fuel Filler Cap Message 304
■ VEHICLE LOADING 305
□ Certification Label 305
■ TRAILER TOWING 306
□ Common Towing Definitions. 307
□ Trailer Hitch Classification 309
□ Trailer Towing Weights (Maximum Trailer Weight Ratings) 310
□ Trailer And Tongue Weight 314
□ Towing Tips. 316
■ RECREATIONAL TOWING (BEHIND MOTORHOME, ETC.) 318
□ Towing This Vehicle Behind Another Vehicle. . . .318
□ Recreational Towing — Four-Wheel Drive Models 319
■ DRIVING TIPS 321
□ On-Road Driving Tips 321
□ Off-Road Driving Tips 322

STARTING THE ENGINE

Before starting your vehicle, adjust your seat, adjust both inside and outside mirrors, and fasten your seat belts.

WARNING!

- **When exiting the vehicle, always remove the key fob from the ignition and lock your vehicle.**
- **Never leave children alone in a vehicle, or with access to an unlocked vehicle.**
- **Allowing children to be in a vehicle unattended is dangerous for a number of reasons. A child or others could be seriously or fatally injured. Children should be warned not to touch the parking brake, brake pedal or the gear selector.**
- **Do not leave the key fob in or near the vehicle, or in a location accessible to children. A child could operate power windows, other controls, or move the vehicle.**
- **Do not leave children or animals inside parked vehicles in hot weather. Interior heat build-up may cause serious injury or death.**

Manual Transmission — If Equipped

Apply the parking brake, place the gear selector in NEUTRAL, and press the clutch pedal before starting the vehicle. This vehicle is equipped with a clutch interlocking ignition system. It will not start unless the clutch pedal is pressed to the floor.

Four-Wheel Drive Models Only

In 4L mode, this vehicle will start regardless of whether or not the clutch pedal is pressed to the floor. This feature enhances off-road performance by allowing the vehicle to start when in 4L without having to press the clutch pedal. The “4WD Indicator Light” will illuminate when the transfer case has been shifted into this mode.

Automatic Transmission — If Equipped

Start the vehicle with the gear selector in the PARK position (vehicle can also be started in NEUTRAL). Apply the brake before shifting to any driving range.

Normal Starting

NOTE: Normal starting of either a cold or a warm engine is obtained without pumping or pressing the accelerator pedal.

Cycle the ignition switch to the START position and release when the engine starts. If the engine fails to start within 10 seconds, cycle the ignition switch to the LOCK/OFF position, wait 10 to 15 seconds, then repeat the "Normal Starting" procedure.

Extreme Cold Weather (Below –22°F Or –30°C)

To ensure reliable starting at these temperatures, use of an externally powered electric engine block heater (available from your authorized dealer) is recommended.

If Engine Fails To Start

WARNING!

- **Never pour fuel or other flammable liquid into the throttle body air inlet opening in an attempt to start the vehicle. This could result in flash fire causing serious personal injury.**
- **Do not attempt to push or tow your vehicle to get it started. Vehicles equipped with an automatic transmission cannot be started this way. Unburned fuel could enter the catalytic converter and once the engine has started, ignite and damage the converter and vehicle.**

(Continued)

WARNING! *(Continued)*

- **If the vehicle has a discharged battery, booster cables may be used to obtain a start from a booster battery or the battery in another vehicle. This type of start can be dangerous if done improperly. Refer to "Jump Starting Procedure" in "In Case Of Emergency" for further information.**

Without Tip Start — Manual Transmission Only

If the engine fails to start after you have followed the "Normal Starting" or "Extreme Cold Weather" procedures, it may be flooded. Push the accelerator pedal all the way to the floor and hold it there while cranking the engine. This should clear any excess fuel in case the engine is flooded.

CAUTION!

To prevent damage to the starter, do not crank the engine for more than 15 seconds at a time. Wait 10 to 15 seconds before trying again.

If the engine has been flooded, it may start to run, but not have enough power to continue running when the key is released. If this occurs, continue cranking with the accelerator pedal pushed all the way to the floor. Release the accelerator pedal and the key once the engine is running smoothly.

If the engine shows no sign of starting after two 15-second periods of cranking with the accelerator pedal held to the floor, repeat the "Normal Starting" or "Extreme Cold Weather" procedures.

With Tip Start — Automatic Transmission Only

If the engine fails to start after you have followed the "Normal Starting" or "Extreme Cold Weather" procedures, it may be flooded. To clear any excess fuel, push the accelerator pedal all the way to the floor and hold it. Then, turn the ignition switch to the START position and release it as soon as the starter engages. The starter motor will disengage automatically in 10 seconds. Once this occurs, release the accelerator pedal, turn the ignition switch to the LOCK position, wait 10 to 15 seconds, then repeat the "Normal Starting" procedure.

CAUTION!

To prevent damage to the starter, wait 10 to 15 seconds before trying again.

After Starting

The idle speed is controlled automatically, and it will decrease as the engine warms up.

ENGINE BLOCK HEATER — IF EQUIPPED

The engine block heater warms the engine, and permits quicker starts in cold weather. Connect the cord to a standard 110-115 Volt AC electrical outlet with a grounded, three-wire extension cord.

The engine block heater must be plugged in at least one hour to have an adequate warming effect on the engine.

The engine block heater cord is found under the hood bundled in front of the battery tray.

WARNING!

Remember to disconnect the engine block heater cord before driving. Damage to the 110-115 Volt AC electrical cord could cause electrocution.

ENGINE BREAK-IN RECOMMENDATIONS

A long break-in period is not required for the engine and drivetrain (transmission and axle) in your vehicle.

Drive moderately during the first 300 miles (500 km). After the initial 60 miles (100 km), speeds up to 50 or 55 mph (80 or 90 km/h) are desirable.

While cruising, brief full-throttle acceleration within the limits of local traffic laws contributes to a good break-in. Wide-open throttle acceleration in low gear can be detrimental and should be avoided.

The engine oil installed in the engine at the factory is a high-quality energy conserving type lubricant. Oil changes should be consistent with anticipated climate conditions under which vehicle operations will occur. For the recommended viscosity and quality grades, refer to "Dealer Service" in "Servicing And Maintenance".

CAUTION!

Never use Non-Detergent Oil or Straight Mineral Oil in the engine or damage may result.

NOTE: A new engine may consume some oil during its first few thousand miles (kilometers) of operation. This should be considered a normal part of the break-in and not interpreted as a problem.

PARKING BRAKE

Before exiting the vehicle, make sure that the parking brake is fully applied. Also, be certain to leave an automatic transmission in PARK, or manual transmission in REVERSE or FIRST gear.

The parking brake lever is located in the center console. To apply the parking brake, pull the lever up as firmly as possible. To release the parking brake, pull the lever up slightly, push the center button, then lower the lever completely.

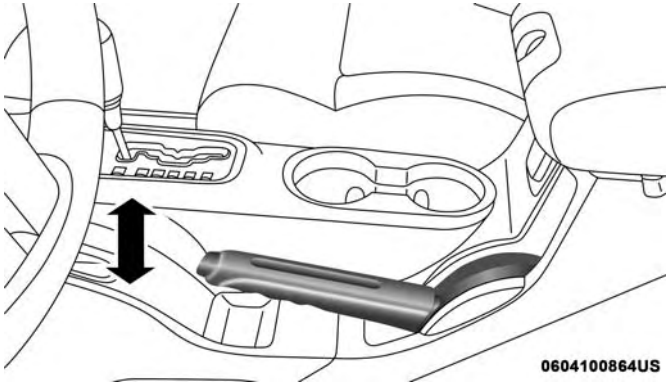

Parking Brake Lever

When the parking brake is applied with the ignition switch ON, the "Brake Warning Light" in the instrument cluster will illuminate.

NOTE:

- When the parking brake is applied and the automatic transmission is placed in gear, the "Brake Warning Light" will flash. If vehicle speed is detected, a chime will sound to alert the driver. Fully release the parking brake before attempting to move the vehicle.
- This light only shows that the parking brake is applied. It does not show the degree of brake application.

When parking on a hill, it is important to turn the front wheels toward the curb on a downhill grade and away from the curb on an uphill grade. For vehicles equipped with an automatic transmission, apply the parking brake before placing the gear selector in PARK, otherwise the load on the transmission locking mechanism may make it difficult to move the gear selector out of PARK. The parking brake should always be applied whenever the driver is not in the vehicle.

WARNING!

- **Never use the PARK position on an automatic transmission as a substitute for the parking brake. Always apply the parking brake fully when parked to guard against vehicle movement and possible injury or damage.**
- **When exiting the vehicle, always remove the key fob from the ignition and lock your vehicle.**
- **Never leave children alone in a vehicle, or with access to an unlocked vehicle. Allowing children to be in a vehicle unattended is dangerous for a number of reasons. A child or others could be seriously or fatally injured. Children should be warned not to**

(Continued)

WARNING! *(Continued)*

touch the parking brake, brake pedal or the gear selector.

- **Do not leave the key fob in or near the vehicle, or in a location accessible to children. A child could operate power windows, other controls, or move the vehicle.**
- **Be sure the parking brake is fully disengaged before driving; failure to do so can lead to brake failure and a collision.**
- **Always fully apply the parking brake when leaving your vehicle or it may roll and cause damage or injury. Also, be certain to leave an automatic transmission in PARK, a manual transmission in REVERSE or first gear. Failure to do so may cause the vehicle to roll and cause damage or injury.**

CAUTION!

If the "Brake Warning Light" remains on with the parking brake released, a brake system malfunction is indicated. Have the brake system serviced by an authorized dealer immediately.

MANUAL TRANSMISSION — IF EQUIPPED

WARNING!

You or others could be injured if you leave the vehicle unattended without having the parking brake fully applied. The parking brake should always be applied when the driver is not in the vehicle, especially on an incline.

CAUTION!

Never drive with your foot resting on the clutch pedal, or attempt to hold the vehicle on a hill with the clutch pedal partially engaged, as this will cause abnormal wear on the clutch.

NOTE: During cold weather, you may experience increased effort in shifting until the transmission fluid warms up. This is normal.

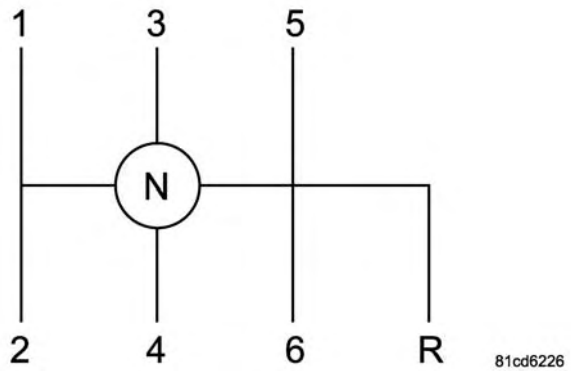

Shift Pattern

Shifting

Fully press the clutch pedal before shifting gears. As you release the clutch pedal, lightly press the accelerator pedal.

You should always use first gear when starting from a standing position.

NOTE: A certain amount of noise from the transmission is normal. This noise can be most noticeable when the vehicle is idling in NEUTRAL with the clutch engaged (clutch pedal released), but it may also be heard when driving. The noise may also be more noticeable when the transmission is warm. This noise is normal and is not an indication of a problem with your clutch or transmission.

Recommended Vehicle Shift Speeds

To utilize your manual transmission efficiently for both fuel economy and performance, it should be upshifted as listed in recommended shift speed chart. Shift at the vehicle speeds listed for acceleration. When heavily loaded or pulling a trailer these recommended up-shift speeds may not apply.

Manual Transmission Shift Speeds in MPH (KM/H)						
Engine	Speeds	1 to 2	2 to 3	3 to 4	4 to 5	5 to 6
3.6L	Accel.	15 (24)	24 (39)	34 (55)	47 (76)	56 (90)
	Cruise	10 (16)	19 (31)	27 (43)	37 (60)	41 (66)

NOTE: Vehicle speeds shown in the chart above are for 2H and 4H only, vehicle speeds in 4L would be significantly less.

Downshifting

Moving from a high gear down to a lower gear is recommended to preserve brakes when driving down steep hills. In addition, downshifting at the right time provides better acceleration when you desire to resume speed. Downshift progressively. Do not skip gears to avoid overspeeding the engine and clutch.

WARNING!

Do not downshift for additional engine braking on a slippery surface. The drive wheels could lose their grip, and the vehicle could skid.

CAUTION!

- **Skipping gears and downshifting into lower gears at higher vehicle speeds can damage the engine and clutch systems, Any attempt to shift into lower gear with clutch pedal depressed may result damage to**

(Continued)

CAUTION! *(Continued)*

the clutch system. Shifting into lower gear and releasing the clutch may result in engine damage.

- **When descending a hill, be very careful to downshift one gear at a time to prevent overspeeding the engine which can cause engine damage, and/or clutch damage, even if the clutch pedal is pressed. If transfer case is in low range the vehicle speeds to cause engine and clutch damage are significantly lower.**
- **Failure to follow the maximum recommended downshifting speeds may cause the engine damage and/or damage the clutch, even if the clutch pedal is pressed.**
- **Descending a hill in low range with clutch pedal depressed could result in clutch damage.**

Maximum Recommended Downshift Speeds

CAUTION!

Failure to follow the maximum recommended downshifting speeds may cause the engine to overspeed and/or damage the clutch disc, even if the clutch pedal is pressed.

Manual Transmission Downshift Speeds in MPH (KM/H)					
Gear Selection	6 to 5	5 to 4	4 to 3	3 to 2	2 to 1
Maximum Speed	80 (129)	70 (113)	50 (81)	30 (48)	15 (24)

NOTE: Vehicle speeds shown in the chart above are for 2H and 4H only, vehicle speeds in 4L would be significantly less.

Reverse Shifting

To shift into REVERSE, bring the vehicle to a complete stop. Press the clutch and pause briefly to allow the gear train to stop rotating. Beginning from the NEUTRAL position, move the gear selector in one quick, smooth motion straight across and into the REVERSE area (the driver will feel a firm "click" as the shifter passes the "knock-over"). Complete the shift by pulling the gear selector into REVERSE.

The "knock-over" provides a resistance to the driver from accidentally entering the REVERSE shift area and warns the driver that they are about to shift the transmission into REVERSE. Due to this feature, a slow shift to REVERSE can be perceived as a high shift effort.

AUTOMATIC TRANSMISSION — IF EQUIPPED

CAUTION!

Damage to the transmission may occur if the following precautions are not observed:
- **Shift into or out of PARK or REVERSE only after the vehicle has come to a complete stop.**
- **Do not shift between PARK, REVERSE, NEUTRAL, or DRIVE when the engine is above idle speed.**
- **Before shifting into any gear, make sure your foot is firmly pressing the brake pedal.**

NOTE: You must press and hold the brake pedal while shifting out of PARK.

WARNING!

- Never use the PARK position as a substitute for the parking brake. Always apply the parking brake fully when exiting the vehicle to guard against vehicle movement and possible injury or damage.
- Your vehicle could move and injure you and others if it is not in PARK. Check by trying to move the gear selector out of PARK with the brake pedal released. Make sure the transmission is in PARK before exiting the vehicle.
- It is dangerous to shift out of PARK or NEUTRAL if the engine speed is higher than idle speed. If your foot is not firmly pressing the brake pedal, the vehicle could accelerate quickly forward or in reverse. You could lose control of the vehicle and hit someone or something. Only shift into gear when the engine is idling normally and your foot is firmly pressing the brake pedal.
- Unintended movement of a vehicle could injure those in or near the vehicle. As with all vehicles, you should never exit a vehicle while the engine is running. Before exiting a vehicle always come to a complete stop, then apply the parking brake, shift

(Continued)

WARNING! *(Continued)*

the transmission into PARK, turn the engine OFF, and remove the ignition key. Once the key is removed, the transmission is locked in PARK, securing the vehicle against unwanted movement.
- When exiting the vehicle, always remove the ignition key from the vehicle and lock the vehicle.
- Never leave children alone in a vehicle, or with access to an unlocked vehicle. Allowing children to be in a vehicle unattended is dangerous for a number of reasons. A child or others could be seriously or fatally injured. Children should be warned not to touch the parking brake, brake pedal or the transmission gear selector.
- Do not leave the ignition key in or near the vehicle (or in a location accessible to children). A child could operate power windows, other controls, or move the vehicle.

Key Ignition Park Interlock

This vehicle is equipped with a Key Ignition Park Interlock which requires the transmission to be in PARK before the ignition can be turned to the LOCK/OFF (key removal) position. The key can only be removed from the ignition when the ignition is in the LOCK/OFF position, and once removed the transmission is locked in PARK.

NOTE: If a malfunction occurs, the system will trap the key in the ignition to warn you that this safety feature is inoperable. The engine can be started and stopped but the key cannot be removed until you obtain service.

Brake/Transmission Shift Interlock System

This vehicle is equipped with a Brake Transmission Shift Interlock System (BTSI) that holds the transmission gear selector in PARK unless the brakes are applied. To shift the transmission out of PARK, the ignition must be in the ON/RUN position (engine running or not) and the brake pedal must be pressed.

Five-Speed Automatic Transmission — If Equipped

The transmission gear position display (located in the instrument cluster) indicates the transmission gear range. You must press the brake pedal to move the gear selector out of PARK (refer to “Brake/Transmission Shift Interlock System” in this section). To drive, move the gear selector from PARK or NEUTRAL to the DRIVE position.

The electronically-controlled transmission adapts its shift schedule based on driver inputs, along with environmental and road conditions. The transmission electronics are self-calibrating; therefore, the first few shifts on a new vehicle may be somewhat abrupt. This is a normal condition, and precision shifts will develop within a few hundred miles (kilometers).

Only shift from DRIVE to PARK or REVERSE when the accelerator pedal is released and the vehicle is stopped. Be sure to keep your foot on the brake pedal when shifting between these gears.

The transmission gear selector has only PARK, REVERSE, NEUTRAL, and DRIVE shift positions. Manual shifts can be made using the Autostick shift control. Moving the gear selector to the left or right (-/+) while in the DRIVE position will manually select the transmission gear and will display the current gear in the instrument cluster as 1, 2, 3, etc. Refer to "AutoStick" in this section for further information.

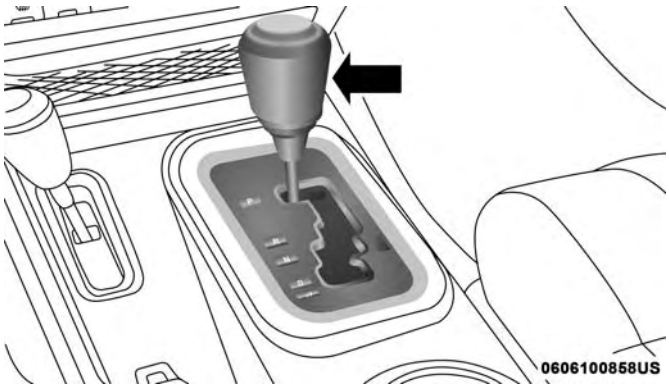

Gear Selector

Gear Ranges

Do not depress the accelerator pedal when shifting from PARK or NEUTRAL into another gear range.

NOTE:

- After selecting any gear range, wait a moment to allow the selected gear to engage before accelerating. This is especially important when the engine is cold.
- If there is a need to restart the engine, be sure to cycle the ignition to the LOCK/OFF position before restarting. Transmission gear engagement may be delayed after restarting the engine if the ignition is not cycled to the LOCK/OFF position first.

PARK (P)

This range supplements the parking brake by locking the transmission. The engine can be started in this range. Never attempt to use PARK while the vehicle is in motion. Apply the parking brake when exiting the vehicle in this range.

When parking on a level surface, you may shift the transmission into PARK first, and then apply the parking brake.

When parking on a hill, apply the parking brake before shifting the transmission to PARK, otherwise the load on the transmission locking mechanism may make it difficult to move the gear selector out of PARK. As an added precaution, turn the front wheels toward the curb on a downhill grade and away from the curb on an uphill grade.

NOTE: Be sure that the transfer case is in a drive position.

When exiting the vehicle, always:

- Apply the parking brake
- Shift the transmission into PARK
- Turn the engine OFF
- Remove the ignition key

WARNING!

- **Never use the PARK position as a substitute for the parking brake. Always apply the parking brake fully when exiting the vehicle to guard against vehicle movement and possible injury or damage.**
- **Your vehicle could move and injure you and others if it is not in PARK. Check by trying to move the gear selector out of PARK with the brake pedal released.**

(Continued)

WARNING! ***(Continued)***

Make sure the transmission is in PARK before exiting the vehicle.

- **It is dangerous to shift out of PARK or NEUTRAL if the engine speed is higher than idle speed. If your foot is not firmly pressing the brake pedal, the vehicle could accelerate quickly forward or in reverse. You could lose control of the vehicle and hit someone or something. Only shift into gear when the engine is idling normally and your foot is firmly pressing the brake pedal.**
- **Unintended movement of a vehicle could injure those in or near the vehicle. As with all vehicles, you should never exit a vehicle while the engine is running. Before exiting a vehicle always come to a complete stop, then apply the parking brake, shift the transmission into PARK, turn the engine OFF, and remove the ignition key. Once the key is removed, the transmission is locked in PARK, securing the vehicle against unwanted movement.**
- **When exiting the vehicle, always remove the ignition key from the vehicle and lock the vehicle.**

(Continued)

WARNING! *(Continued)*

- **Never leave children alone in a vehicle, or with access to an unlocked vehicle. Allowing children to be in a vehicle unattended is dangerous for a number of reasons. A child or others could be seriously or fatally injured. Children should be warned not to touch the parking brake, brake pedal or the transmission gear selector.**
- **Do not leave the ignition key in or near the vehicle (or in a location accessible to children). A child could operate power windows, other controls, or move the vehicle.**

CAUTION!

- **Before moving the transmission gear selector out of PARK, you must turn the ignition to the ON/RUN mode, and also press the brake pedal. Otherwise, damage to the gear selector could result.**
- **DO NOT race the engine when shifting from PARK or NEUTRAL into another gear range, as this can damage the drivetrain.**

The following indicators should be used to ensure that you have properly engaged the transmission into the PARK position (P):

- When shifting into PARK, firmly move the gear selector all the way forward and to the left until it stops and is fully seated.
- Look at the transmission gear position display and verify that it indicates the PARK position (P).
- With brake pedal released, verify that the gear selector will not move out of PARK.

REVERSE (R)

This range is for moving the vehicle backward. Shift into REVERSE only after the vehicle has come to a complete stop.

NEUTRAL (N)

Use this range when the vehicle is standing for prolonged periods with the engine running. The engine may be started in this range. Apply the parking brake and shift the transmission into PARK if you must exit the vehicle.

WARNING!

Do not coast in NEUTRAL and never turn off the ignition to coast down a hill. These are unsafe practices that limit your response to changing traffic or road conditions. You might lose control of the vehicle and have a collision.

CAUTION!

Towing the vehicle, coasting, or driving for any other reason with the transmission in NEUTRAL can cause severe transmission damage.
Refer to "Recreational Towing" in "Starting And Operating" and "Towing A Disabled Vehicle" in "In Case Of Emergency" for further information.

DRIVE (D)

This range should be used for most city and highway driving. It provides the smoothest upshifts and downshifts, and the best fuel economy. The transmission automatically upshifts through underdrive first, second, and third gears, direct fourth gear and overdrive fifth gear. The DRIVE position provides optimum driving characteristics under all normal operating conditions.

When frequent transmission shifting occurs (such as when operating the vehicle under heavy loading conditions, in hilly terrain, traveling into strong head winds, or while towing a heavy trailer), use the AutoStick shift control (refer to "AutoStick" in this section for further information) to select a lower gear. Under these conditions, using a lower gear will improve performance and extend transmission life by reducing excessive shifting and heat buildup.

Transmission Limp Home Mode

Transmission function is monitored electronically for abnormal conditions. If a condition is detected that could result in transmission damage, Transmission Limp Home Mode is activated. In this mode, the transmission remains in the current gear until the vehicle is brought to a stop. After the vehicle has stopped, the transmission will remain in second gear regardless of which forward gear is selected. PARK, REVERSE, and NEUTRAL will continue to operate. The Malfunction Indicator Light (MIL) may be illuminated. Limp Home Mode allows the vehicle to be driven to an authorized dealer for service without damaging the transmission.

In the event of a momentary problem, the transmission can be reset to regain all forward gears by performing the following steps:

1. Stop the vehicle.
2. Shift the transmission into PARK.
3. Turn the ignition to the LOCK/OFF position.
4. Wait approximately 10 seconds.
5. Restart the engine.
6. Shift into the desired gear range. If the problem is no longer detected, the transmission will return to normal operation.

NOTE: Even if the transmission can be reset, we recommend that you visit an authorized dealer at your earliest possible convenience. Your authorized dealer has diagnostic equipment to assess the condition of your transmission. If the transmission cannot be reset, authorized dealer service is required.

Overdrive Operation

The automatic transmission includes an electronically controlled Overdrive (fifth gear). The transmission will automatically shift into Overdrive if the following conditions are present:

- The gear selector is in the DRIVE position.
- Vehicle speed is sufficiently high.
- The driver is not heavily pressing the accelerator.

Autostick

AutoStick is a driver-interactive transmission feature providing manual shift control, giving you more control of the vehicle. AutoStick allows you to maximize engine braking, eliminate undesirable upshifts and downshifts, and improve overall vehicle performance.

This system can also provide you with more control during passing, city driving, cold slippery conditions, mountain driving, trailer towing, and many other situations.

Operation

When the gear selector is in the DRIVE position, the transmission will operate automatically, shifting between the five available gears. To engage AutoStick, simply tap the gear selector to the right or left (+/-) while in the

DRIVE position. Tapping (-) to enter AutoStick mode will downshift the transmission to the next lower gear, while using (+) to enter AutoStick mode will retain the current gear. When AutoStick is active, the current transmission gear is displayed in the instrument cluster.

In AutoStick mode, the transmission will shift up or down when (+/-) is manually selected by the driver, unless an engine lugging or overspeed condition would result. It will remain in the selected gear until another upshift or downshift is chosen, except as described below.

- The transmission will automatically upshift when necessary to prevent engine over-speed.
- Heavily pressing the accelerator pedal will generate an automatic downshift (for improved acceleration) when reasonable.
- The transmission will automatically downshift as the vehicle slows (to prevent engine lugging) and will display the current gear.
- The transmission will automatically downshift to first gear when coming to a stop. After a stop, the driver should manually upshift (+) the transmission as the vehicle is accelerated.
- You can start out, from a stop, in first or second gear. Tapping (+) (at a stop) will allow starting in second gear. Starting out in second gear can be helpful in snowy or icy conditions.
- The system will ignore attempts to upshift at too low of a vehicle speed.
- Avoid using speed control when AutoStick is engaged.
- Transmission shifting will be more noticeable when AutoStick is enabled.

NOTE: When the transfer case is in the 4L (Low) range, the transmission will shift automatically (but no higher than the displayed gear).

To disengage AutoStick mode, hold the gear selector to the right (+) until "D" is once again displayed in the instrument cluster. You can shift in or out of the AutoStick mode at any time without taking your foot off the accelerator pedal.

WARNING!

Do not downshift for additional engine braking on a slippery surface. The drive wheels could lose their grip and the vehicle could skid, causing a collision or personal injury.

FOUR–WHEEL DRIVE OPERATION (COMMAND-TRAC I OR ROCK-TRAC)

WARNING!

Failure to engage a transfer case position completely can cause transfer case damage or loss of power and vehicle control. You could have a collision. Do not drive the vehicle unless the transfer case is fully engaged.

Operating Instructions/Precautions

The transfer case provides four mode positions:

- 2H (Two-Wheel Drive High Range)
- 4H (Four-Wheel Drive High Range)
- N (Neutral)
- 4L (Four-Wheel Drive Low Range)

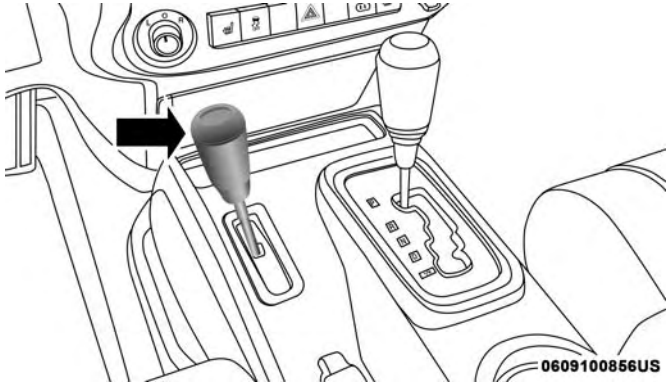

Four-Wheel Drive Gear Selector

The transfer case is intended to be driven in the 2H position for normal street and highway conditions, such as hard-surfaced roads.

In the event that additional traction is required, the transfer case 4H and 4L positions can be used to lock the front and rear driveshafts together, forcing the front and rear wheels to rotate at the same speed. The 4H and 4L positions are intended for loose, slippery road surfaces only and not intended for normal driving. Driving in the 4H and 4L positions on hard-surfaced roads will cause increased tire

wear and damage to the driveline components. Refer to "Shifting Procedures" in this section for further information on shifting into 4H or 4L.

The "4WD Indicator Light" (located in the instrument cluster) alerts the driver that the vehicle is in four-wheel drive, and the front and rear driveshafts are locked together. The light will illuminate when the transfer case is shifted into the 4H position.

NOTE: Do not attempt to shift when only the front or rear wheels are spinning. The transfer case is not equipped with a synchronizer, and the front and rear driveshaft speeds must be equal for a shift to take place. Shifting while the front or rear wheels are spinning at different speeds can cause damage to the transfer case.

When operating your vehicle in 4L, the engine speed will be approximately three times (four times for Rubicon models) that of the 2H or 4H positions at a given road speed. Take care not to overspeed the engine.

Proper operation of four-wheel drive vehicles depends on tires of equal size, type, and circumference on each wheel. Any difference will adversely affect shifting and cause damage to the transfer case.

Because four-wheel drive provides improved traction, there is a tendency to exceed safe turning and stopping speeds. Do not go faster than road conditions permit.

WARNING!

You or others could be injured or killed if you leave the vehicle unattended with the transfer case in the NEUTRAL (N) position without first fully engaging the parking brake. The transfer case NEUTRAL (N) position disengages both the front and rear driveshafts from the powertrain, and will allow the vehicle to roll, even if the automatic transmission is in PARK (or manual transmission is in gear). The parking brake should always be applied when the driver is not in the vehicle.

Shift Positions

For additional information on the appropriate use of each 4WD system mode position, see the information below:

2H Position

This range is used for normal street and highway driving on hard-surfaced roads.

4H Position

This range locks the front and rear driveshafts together, forcing the front and rear wheels to rotate at the same speed. This range (4H) provides additional traction for loose, slippery road surfaces and should not be used on dry pavement.

The "4WD Indicator Light" (located in the instrument cluster) will illuminate when the transfer case is shifted into the 4H position.

N (Neutral) Position

This range disengages the front and rear driveshafts from the powertrain. It is to be used for flat towing behind another vehicle. Refer to "Recreational Towing" in "Starting And Operating" for further information.

4L Position

This range locks the front and rear driveshafts together, forcing the front and rear wheels to rotate at the same speed. This range (4L) provides additional traction and maximum pulling power for loose, slippery road surfaces only. Do not exceed 25 mph (40 km/h).

CAUTION!

Exceeding 25 mph (40 km/h) while the transfer case is engaged in 4L may result in an engine overspeed condition and engine damage.

The "4WD Indicator Light" (located in the instrument cluster) will illuminate when the transfer case is shifted into the 4L position.

NOTE: When in 4L, the "ESC Off Indicator Light" will display in the instrument cluster.

Shifting Procedures

2H to 4H or 4H to 2H

Shifting between 2H and 4H can be made with the vehicle stopped or in motion. With the vehicle in motion, the transfer case will engage/disengage faster if you momentarily release the accelerator pedal after completing the shift. Apply a constant force when shifting the transfer case lever.

4H to 4L or 4L to 4H

With the vehicle rolling at 2 to 3 mph (3 to 5 km/h), shift an automatic transmission into NEUTRAL (N), or press the clutch pedal on a manual transmission. While the vehicle is coasting at 2 to 3 mph (3 to 5 km/h), shift the transfer case lever firmly to the desired position. Do not pause with the transfer case in N (Neutral). Once the shift is completed, place the automatic transmission into DRIVE or release the clutch pedal on a manual transmission.

NOTE: Shifting into or out of 4L is possible with the vehicle completely stopped; however, difficulty may occur due to the mating teeth not being properly aligned. Several attempts may be required for clutch teeth alignment and shift completion to occur. The preferred method is with the vehicle rolling at 2 to 3 mph (3 to 5 km/h). Avoid attempting to engage or disengage 4L with the vehicle moving faster than 2 to 3 mph (3 to 5 km/h).

WARNING!

Failure to engage a transfer case position completely can cause transfer case damage or loss of power and vehicle control. You could have a collision. Do not drive the vehicle unless the transfer case is fully engaged.

Trac-Lok Rear Axle — If Equipped

The Trac-Lok rear axle provides a constant driving force to both rear wheels and reduces wheel spin caused by the loss of traction at one driving wheel. If traction differs between the two rear wheels, the differential automatically proportions the usable torque by providing more torque to the wheel that has traction.

Trac-Lok is especially helpful during slippery driving conditions. With both rear wheels on a slippery surface, a slight application of the accelerator will supply maximum traction.

WARNING!

On vehicles equipped with a limited-slip differential, never run the engine with one rear wheel off the ground. The vehicle may drive through the rear wheel remaining on the ground and cause you to lose control of your vehicle.

Axle Lock (Tru-Lok) — Rubicon Models

The AXLE LOCK switch is located on the instrument panel (to the left of the steering column).

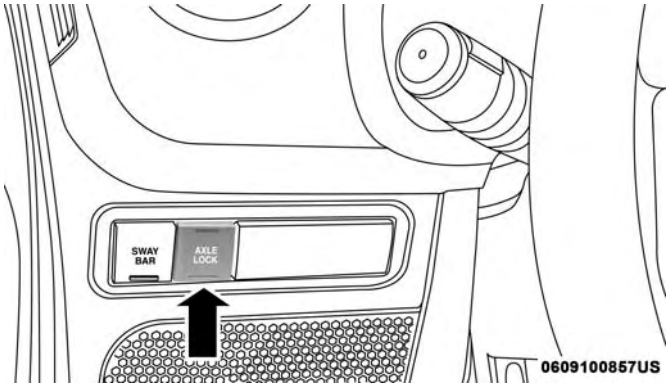

Axle Lock Switch

This feature will only activate when the following conditions are met:

- Key in ignition, vehicle in 4L (Low) range.
- Vehicle speed should be 10 mph (16 km/h) or less.

To activate the system, push the bottom of the AXLE LOCK switch once to lock the rear axle only (the "Rear Axle Lock Indicator Light" will illuminate), push the bottom of the switch again to lock the front axle (the "Front Axle Lock Indicator Light" will illuminate). When the rear axle is locked, pushing the bottom of switch again will lock or unlock the front axle.

NOTE: The indicator lights will flash until the axles are fully locked or unlocked.

To unlock the axles, push the top of the AXLE LOCK switch.

Axle lock will disengage if the vehicle is taken out of 4L (Low) range, or the ignition switch is turned to the OFF position.

Electronic Sway Bar Disconnect — If Equipped

Your vehicle may be equipped with an electronic disconnecting stabilizer/sway bar. This system allows greater front suspension travel in off-road situations.

This system is controlled by the SWAY BAR switch located on the instrument panel (to the left of the steering column).

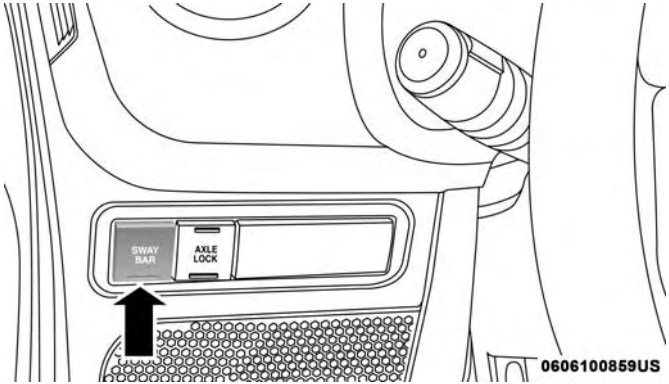

Sway Bar Switch

Push the SWAY BAR switch to activate the system. Push the switch again to deactivate the system. The "Sway Bar Indicator Light" (located in the instrument cluster) will illuminate when the bar is disconnected. The "Sway Bar Indicator Light" will flash during activation transition, or when activation conditions are not met. The stabilizer/sway bar should remain in on-road mode during normal driving conditions.

WARNING!

Do not disconnect the stabilizer bar and drive on hardsurfaced roads or at speeds above 18 mph (29 km/h); you may lose control of the vehicle, which could result in serious injury. The front stabilizer bar enhances vehicle stability and is necessary for maintaining control of the vehicle. The system monitors vehicle speed and will attempt to reconnect the stabilizer bar at speeds over 18 mph (29 km/h). This is indicated by a flashing or solid "Sway Bar Indicator Light." Once vehicle speed is reduced below 14 mph (22 km/h), the system will once again attempt to return to off-road mode.

To disconnect the stabilizer/sway bar, shift to either 4H or 4L and push the SWAY BAR switch to obtain the off-road position. Refer to "Four-Wheel Drive Operation" in this section for further information. The "Sway Bar Indicator Light" will flash until the stabilizer/sway bar has been fully disconnected.

NOTE: The stabilizer/sway bar may be torque locked due to left and right suspension height differences. This condition is due to driving surface differences or vehicle loading. In order for the stabilizer/sway bar to disconnect/reconnect, the right and left halves of the bar must be aligned. This alignment may require that the vehicle be driven onto level ground or rocked from side to side.

To return to on-road mode, push the SWAY BAR switch again.

WARNING!

If the stabilizer/sway bar will not return to on-road mode, the "Sway Bar Indicator Light" will flash in the instrument cluster and vehicle stability is greatly reduced. Do not attempt to drive the vehicle over 18 mph (29 km/h). Driving faster than 18 mph (29 km/ h) may cause loss of control of the vehicle, which could result in serious injury. Contact your local authorized dealer for assistance.

POWER STEERING

The standard power steering system will give you good vehicle response and increased ease of maneuverability in tight spaces. The system will provide mechanical steering capability if power assist is lost.

If for some reason the power assist is interrupted, it will still be possible to steer your vehicle. Under these conditions, you will observe a substantial increase in steering effort, especially at very low vehicle speeds and during parking maneuvers.

NOTE:

- Increased noise levels at the end of the steering wheel travel are considered normal and do not indicate that there is a problem with the power steering system.
- Upon initial start-up in cold weather, the power steering pump may make noise for a short amount of time. This is due to the cold, thick fluid in the steering system. This noise should be considered normal, and it does not in any way damage the steering system.

CAUTION!

Prolonged operation of the steering system at the end of the steering wheel travel will increase the steering fluid temperature and it should be avoided when possible. Damage to the power steering pump may occur.

Power Steering Fluid Check

Checking the power steering fluid level at a defined service interval is not required. The fluid should only be checked if a leak is suspected, abnormal noises are apparent, and/or the system is not functioning as anticipated. Coordinate inspection efforts through your authorized dealer.

WARNING!

Fluid level should be checked on a level surface and with the engine off to prevent injury from moving parts and to ensure accurate fluid level reading. Do not overfill. Use only manufacturer's recommended power steering fluid.

CAUTION!

Do not use chemical flushes in your power steering system as the chemicals can damage your power steering components. Such damage is not covered by the New Vehicle Limited Warranty.

If necessary, add fluid to restore to the proper indicated level. With a clean cloth, wipe any spilled fluid from all surfaces. Refer to "Fluids And Lubricants" in "Technical Specifications" for further information.

SPEED CONTROL — IF EQUIPPED

When engaged, the Speed Control takes over accelerator operations at speeds greater than 25 mph (40 km/h).

The Speed Control buttons are located on the right side of the steering wheel.

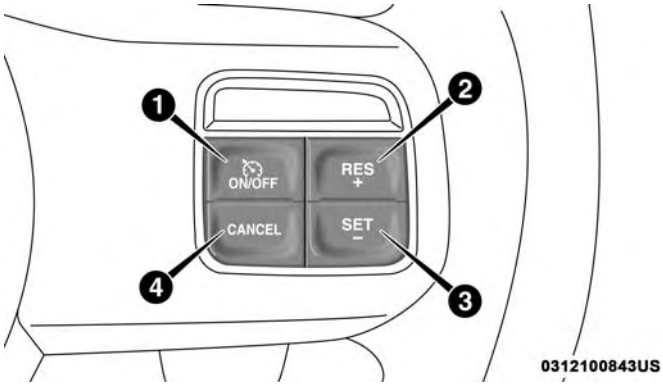

Speed Control Buttons

1 — ON/OFF
2 — RES +
3 — SET -
4 — CANCEL

NOTE: In order to ensure proper operation, the Speed Control System has been designed to shut down if multiple Speed Control functions are operated at the same time. If this occurs, the Speed Control System can be reactivated by pushing the Speed Control ON/OFF button and resetting the desired vehicle set speed.

WARNING!

Speed Control can be dangerous where the system cannot maintain a constant speed. Your vehicle could go too fast for the conditions, and you could lose control and have an accident. Do not use Speed Control in heavy traffic or on roads that are winding, icy, snow-covered or slippery.

To Activate

Push the ON/OFF button. The Cruise Indicator Light in the instrument cluster display will illuminate. To turn the system off, push the ON/OFF button a second time. The Cruise Indicator Light will turn off. The system should be turned off when not in use.

WARNING!

Leaving the Speed Control system on when not in use is dangerous. You could accidentally set the system or cause it to go faster than you want. You could lose control and have an accident. Always leave the system off when you are not using it.

To Set A Desired Speed

Turn the Speed Control on. When the vehicle has reached the desired speed, push the SET (-) button and release. Release the accelerator and the vehicle will operate at the selected speed.

NOTE: The vehicle should be traveling at a steady speed and on level ground before pushing the SET (-) button.

To Vary The Speed Setting

To Increase Speed

When the Speed Control is set, you can increase speed by pushing the RES (+) button.

The driver's preferred units can be selected through the instrument panel settings if equipped. Refer to "Getting To Know Your Instrument Panel" for more information. The speed increment shown is dependent on the chosen speed unit of U.S. (mph) or Metric (km/h):

U.S. Speed (mph)

- Pushing the RES (+) button once will result in a 1 mph increase in set speed. Each subsequent tap of the button results in an increase of 1 mph.
- If the button is continually pushed, the set speed will continue to increase until the button is released, then the new set speed will be established.

Metric Speed (km/h)

- Pushing the RES (+) button once will result in a 1 km/h increase in set speed. Each subsequent tap of the button results in an increase of 1 km/h.
- If the button is continually pushed, the set speed will continue to increase until the button is released, then the new set speed will be established.

To Decrease Speed

When the Speed Control is set, you can decrease speed by pushing the SET (-) button.

The driver's preferred units can be selected through the instrument panel settings if equipped. Refer to "Getting To Know Your Instrument Panel" for more information. The speed increment shown is dependent on the chosen speed unit of U.S. (mph) or Metric (km/h):

U.S. Speed (mph)

- Pushing the SET (-) button once will result in a 1 mph decrease in set speed. Each subsequent tap of the button results in a decrease of 1 mph.

- If the button is continually pushed, the set speed will continue to decrease until the button is released, then the new set speed will be established.

Metric Speed (km/h)

- Pushing the SET (-) button once will result in a 1 km/h decrease in set speed. Each subsequent tap of the button results in a decrease of 1 km/h.
- If the button is continually pushed, the set speed will continue to decrease until the button is released, then the new set speed will be established.

To Accelerate For Passing

Press the accelerator as you would normally. When the pedal is released, the vehicle will return to the set speed.

To Resume Speed

To resume a previously set speed, push the RES (+) button and release. Resume can be used at any speed above 20 mph (32 km/h).

To Deactivate

A soft tap on the brake pedal, pushing the CANCEL button, or normal brake pressure while slowing the vehicle will deactivate the Speed Control without erasing the set speed from memory.

Pushing the ON/OFF button or turning the ignition switch OFF erases the set speed from memory.

Using Speed Control On Hills

The transmission may downshift on hills to maintain the vehicle set speed.

NOTE: The Speed Control system maintains speed up and down hills. A slight speed change on moderate hills is normal.

On steep hills, a greater speed loss or gain may occur so it may be preferable to drive without Speed Control.

WARNING!

Speed Control can be dangerous where the system cannot maintain a constant speed. Your vehicle could go too fast for the conditions, and you could lose control and have an accident. Do not use Speed Control in heavy traffic or on roads that are winding, icy, snow-covered or slippery.

REFUELING THE VEHICLE

Fuel Filler Cap

The fuel filler cap is located on the driver's side of the vehicle. If the fuel filler cap is lost or damaged, be sure the replacement cap is the correct one for this vehicle.

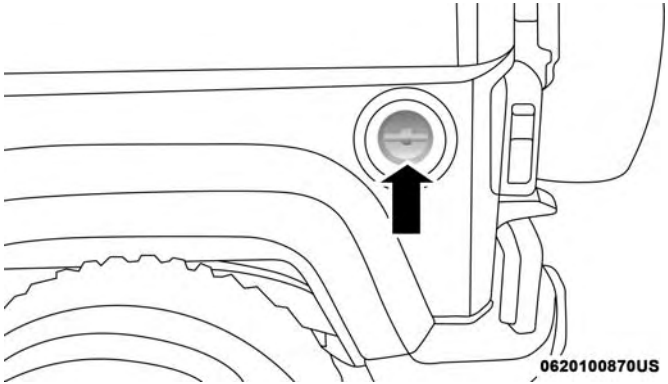

Fuel Filler Cap

WARNING!

- **Never have any smoking materials lit in or near the vehicle when the gas cap is removed or the tank is being filled.**
- **Never add fuel when the engine is running. This is in violation of most state and federal fire regulations and may cause the MIL to turn on.**

(Continued)

WARNING! ***(Continued)***

- **A fire may result if gasoline is pumped into a portable container that is inside of a vehicle. You could be burned. Always place gas containers on the ground while filling.**

CAUTION!

- **Damage to the fuel system or emission control system could result from using an improper fuel filler cap. A poorly fitting cap could let impurities into the fuel system. Also, a poorly fitting aftermarket cap can cause the "Malfunction Indicator Light (MIL)" to illuminate, due to fuel vapors escaping from the system.**
- **To avoid fuel spillage and overfilling, do not "top off" the fuel tank after filling.**

NOTE:

- When the fuel nozzle "clicks" or shuts off, the fuel tank is full.
- Tighten the fuel filler cap about 1/4 turn until you hear one click. This is an indication that the cap is properly tightened.
- If the fuel filler cap is not tightened properly, the MIL will come on. Be sure the cap is tightened every time the vehicle is refueled.

Loose Fuel Filler Cap Message

After fuel has been added, the vehicle diagnostic system can determine if the fuel filler cap is possibly loose, improperly installed, or damaged. If the system detects a malfunction, the "gASCAP" message will display in the odometer display. Tighten the gas cap until a "clicking" sound is heard. This is an indication that the gas cap is properly tightened. Push the odometer reset button to turn the message off. If the problem persists, the message will appear the next time the vehicle is started. This might indicate a damaged cap. If the problem is detected twice in a row, the system will turn on the MIL. Resolving the problem will turn the MIL off.

VEHICLE LOADING

Certification Label

As required by National Highway Traffic Safety Administration regulations, your vehicle has a certification label affixed to the driver's side door or pillar.

This label contains the month and year of manufacture, Gross Vehicle Weight Rating (GVWR), Gross Axle Weight Rating (GAWR) front and rear, and Vehicle Identification Number (VIN). A Month-Day-Hour (MDH) number is included on this label and indicates the Month, Day and Hour of manufacture. The bar code that appears on the bottom of the label is your VIN.

Gross Vehicle Weight Rating (GVWR)

The GVWR is the total permissible weight of your vehicle including driver, passengers, vehicle, options and cargo. The label also specifies maximum capacities of front and rear axle systems (GAWR). Total load must be limited so GVWR and front and rear GAWR are not exceeded.

Payload

The payload of a vehicle is defined as the allowable load weight a truck can carry, including the weight of the driver, all passengers, options and cargo.

Gross Axle Weight Rating (GAWR)

The GAWR is the maximum permissible load on the front and rear axles. The load must be distributed in the cargo area so that the GAWR of each axle is not exceeded.

Each axle GAWR is determined by the components in the system with the lowest load carrying capacity (axle, springs, tires or wheels). Heavier axles or suspension components sometimes specified by purchasers for increased durability does not necessarily increase the vehicle's GVWR.

Tire Size

The tire size on the Vehicle Certification Label represents the actual tire size on your vehicle. Replacement tires must be equal to the load capacity of this tire size.

Rim Size

This is the rim size that is appropriate for the tire size listed.

Inflation Pressure

This is the cold tire inflation pressure for your vehicle for all loading conditions up to full GAWR.

Curb Weight

The curb weight of a vehicle is defined as the total weight of the vehicle with all fluids, including vehicle fuel, at full capacity conditions, and with no occupants or cargo loaded into the vehicle. The front and rear curb weight values are determined by weighing your vehicle on a commercial scale before any occupants or cargo are added.

Loading

The actual total weight and the weight of the front and rear of your vehicle at the ground can best be determined by weighing it when it is loaded and ready for operation.

The entire vehicle should first be weighed on a commercial scale to insure that the GVWR has not been exceeded. The weight on the front and rear of the vehicle should then be determined separately to be sure that the load is properly distributed over the front and rear axle. Weighing the vehicle may show that the GAWR of either the front or rear axles has been exceeded but the total load is within the specified GVWR. If so, weight must be shifted from front to rear or rear to front as appropriate until the specified weight limitations are met. Store the heavier items down low and be sure that the weight is distributed equally. Stow all loose items securely before driving.

Improper weight distributions can have an adverse effect on the way your vehicle steers and handles and the way the brakes operate.

CAUTION!

Do not load your vehicle any heavier than the GVWR or the maximum front and rear GAWR. If you do, parts on your vehicle can break, or it can change the way your vehicle handles. This could cause you to lose control. Also overloading can shorten the life of your vehicle.

TRAILER TOWING

In this section you will find safety tips and information on limits to the type of towing you can reasonably do with your vehicle. Before towing a trailer, carefully review this information to tow your load as efficiently and safely as possible.

To maintain the New Vehicle Limited Warranty coverage, follow the requirements and recommendations in this manual concerning vehicles used for trailer towing.

Common Towing Definitions

The following trailer towing related definitions will assist you in understanding the following information:

Gross Vehicle Weight Rating (GVWR)

The GVWR is the total allowable weight of your vehicle. This includes driver, passengers, cargo and tongue weight. The total load must be limited so that you do not exceed the GVWR. Refer to "Vehicle Loading/Vehicle Certification Label" in "Starting And Operating" for further information.

Gross Trailer Weight (GTW)

The GTW is the weight of the trailer plus the weight of all cargo, consumables and equipment (permanent or temporary) loaded in or on the trailer in its "loaded and ready for operation" condition.

The recommended way to measure GTW is to put your fully loaded trailer on a vehicle scale. The entire weight of the trailer must be supported by the scale.

Gross Combination Weight Rating (GCWR)

The GCWR is the total permissible weight of your vehicle and trailer when weighed in combination.

Gross Axle Weight Rating (GAWR)

The GAWR is the maximum capacity of the front and rear axles. Distribute the load over the front and rear axles evenly. Make sure that you do not exceed either front or rear GAWR. Refer to "Vehicle Loading/Vehicle Certification Label" in "Starting And Operating" for further information.

WARNING!

It is important that you do not exceed the maximum front or rear GAWR. A dangerous driving condition can result if either rating is exceeded.

Tongue Weight (TW)

The tongue weight is the downward force exerted on the hitch ball by the trailer. You must consider this as part of the load on your vehicle.

Frontal Area

The frontal area is the maximum height multiplied by the maximum width of the front of a trailer.

Trailer Sway Control – If Equipped

The trailer sway control is a telescoping link that can be installed between the hitch receiver and the trailer tongue. It typically provides adjustable friction associated with the telescoping motion to dampen any unwanted trailer swaying motions while traveling.

Weight-Carrying Hitch

A weight-carrying hitch supports the trailer tongue weight, just as if it were luggage located at a hitch ball or some other connecting point of the vehicle. These kinds of hitches are the most popular on the market today and they are commonly used to tow small and medium sized trailers.

Weight-Distributing Hitch

A weight-distributing system works by applying leverage through spring (load) bars. They are typically used for heavier loads to distribute trailer tongue weight to the tow vehicle's front axle and the trailer axle(s). When used in accordance with the manufacturer's directions, it provides for a more level ride, offering more consistent steering and brake control thereby enhancing towing safety. The addition of a friction/hydraulic sway control also dampens sway caused by traffic and crosswinds and contributes positively to tow vehicle and trailer stability. Trailer sway control and a weight distributing (load equalizing) hitch are recommended for heavier Tongue Weights (TW) and may be required depending on vehicle and trailer configuration/loading to comply with Gross Axle Weight Rating (GAWR) requirements.

WARNING!

- **An improperly adjusted Weight Distributing Hitch system may reduce handling, stability, braking performance, and could result in a collision.**
- **Weight Distributing Systems may not be compatible with Surge Brake Couplers. Consult with your hitch and trailer manufacturer or a reputable Recreational Vehicle dealer for additional information.**

Trailer Hitch Classification

The following chart provides the industry standard for the maximum trailer weight a given trailer hitch class can tow and should be used to assist you in selecting the correct trailer hitch for your intended towing condition.

Trailer Hitch Classification Definitions	
Class	**Max. Trailer Hitch Industry Standards**
Class I - Light Duty	2,000 lbs (907 kg)
Class II - Medium Duty	3,500 lbs (1,587 kg)
Class III - Heavy Duty	5,000 lbs (2,267 kg)
Class IV - Extra Heavy Duty	10,000 lbs (4,535 kg)
Refer to the "Trailer Towing Weights (Maximum Trailer Weight Ratings)" chart for the Maximum Gross Trailer Weight (GTW) towable for your given drivetrain.	
All trailer hitches should be professionally installed on your vehicle.	

Trailer Towing Weights (Maximum Trailer Weight Ratings)

Engine/ Transmission	Axle	Model	GCWR (Gross Combined Wt. Rating)	Frontal Area	Max. GTW (Gross Trailer Wt.)	Max. Trailer Tongue Wt. (See Note)
3.6L/Manual	3.21	Two–Door Sport Model (4WD)	6,900 lbs (3 130 kg)	25 sq ft (2.32 sq m)	2,000 lbs (907 kg)	200 lbs (91 kg)
3.6L/Manual	3.73	Two–Door Sport Model (4WD)	8,400 lbs (3 810 kg)	25 sq ft (2.32 sq m)	3,500 lbs (1 587 kg)	350 lbs (158 kg)
3.6L/ Automatic	3.21	Two–Door Sport Model (4WD)	6,900 lbs (3 130 kg)	25 sq ft (2.32 sq m)	2,000 lbs (907 kg)	200 lbs (91 kg)
3.6L/ Automatic	3.73	Two–Door Sport Model (4WD)	8,400 lbs (3 810 kg)	25 sq ft (2.32 sq m)	3,500 lbs (1 587 kg)	350 lbs (158 kg)
3.6L/Manual	3.21	Two–Door Sahara Model (4WD)	7,000 lbs (3 175 kg)	25 sq ft (2.32 sq m)	2,000 lbs (907 kg)	200 lbs (91 kg)
3.6L/Manual	3.73	Two–Door Sahara Model (4WD)	8,500 lbs (3 856 kg)	25 sq ft (2.32 sq m)	3,500 lbs (1 587 kg)	350 lbs (158 kg)

Engine/ Transmission	Axle	Model	GCWR (Gross Combined Wt. Rating)	Frontal Area	Max. GTW (Gross Trailer Wt.)	Max. Trailer Tongue Wt. (See Note)
3.6L/ Automatic	3.21	Two–Door Sahara Model (4WD)	7,000 lbs (3 175 kg)	25 sq ft (2.32 sq m)	2,000 lbs (907 kg)	200 lbs (91 kg)
3.6L/ Automatic	3.73	Two–Door Sahara Model (4WD)	8,500 lbs (3 856 kg)	25 sq ft (2.32 sq m)	3,500 lbs (1 587 kg)	350 lbs (158 kg)
3.6L/Manual	4.10	Two–Door Rubicon Model (4WD)	8,600 lbs (3 900 kg)	25 sq ft (2.32 sq m)	3,500 lbs (1 587 kg)	350 lbs (158 kg)
3.6L/ Automatic	3.73	Two–Door Rubicon Model (4WD)	8,600 lbs (3 900 kg)	25 sq ft (2.32 sq m)	3,500 lbs (1 587 kg)	350 lbs (158 kg)
3.6L/Manual	3.21	Four–Door Sport Model (4WD)	7,400 lbs (3 357 kg)	32 sq ft (2.97 sq m)	2,000 lbs (907 kg)	200 lbs (91 kg)
3.6L/Manual	3.73	Four–Door Sport Model (4WD)	8,900 lbs (4 037 kg)	32 sq ft (2.97 sq m)	3,500 lbs (1 587 kg)	350 lbs (158 kg)

Engine/ Transmission	Axle	Model	GCWR (Gross Combined Wt. Rating)	Frontal Area	Max. GTW (Gross Trailer Wt.)	Max. Trailer Tongue Wt. (See Note)
3.6L/ Automatic	3.21	Four–Door Sport Model (4WD)	7,400 lbs (3 357 kg)	32 sq ft (2.97 sq m)	2,000 lbs (907 kg)	200 lbs (91 kg)
3.6L/ Automatic	3.73	Four–Door Sport Model (4WD)	8,900 lbs (4 037 kg)	32 sq ft (2.97 sq m)	3,500 lbs (1 587 kg)	350 lbs (158 kg)
3.6L/Manual	3.21	Four–Door Sahara Model (4WD)	7,500 lbs (3 402 kg)	32 sq ft (2.97 sq m)	2,000 lbs (907 kg)	200 lbs (91 kg)
3.6L/Manual	3.73	Four–Door Sahara Model (4WD)	9,000 lbs (4 082 kg)	32 sq ft (2.97 sq m)	3,500 lbs (1 587 kg)	350 lbs (158 kg)
3.6L/ Automatic	3.21	Four–Door Sahara Model (4WD)	7,500 lbs (3 402 kg)	32 sq ft (2.97 sq m)	2,000 lbs (907 kg)	200 lbs (91 kg)
3.6L/ Automatic	3.73	Four–Door Sahara Model (4WD)	9,000 lbs (4 082 kg)	32 sq ft (2.97 sq m)	3,500 lbs (1 587 kg)	350 lbs (158 kg)

Engine/ Transmission	Axle	Model	GCWR (Gross Combined Wt. Rating)	Frontal Area	Max. GTW (Gross Trailer Wt.)	Max. Trailer Tongue Wt. (See Note)
3.6L/Manual	4.10	Four–Door Rubicon Model (4WD)	9,200 lbs (4 173 kg)	32 sq ft (2.97 sq m)	3,500 lbs (1 587 kg)	350 lbs (158 kg)
3.6L/ Automatic	3.73	Four–Door Rubicon Model (4WD)	9,200 lbs (4 173 kg)	32 sq ft (2.97 sq m)	3,500 lbs (1 587 kg)	350 lbs (158 kg)
Refer to local laws for maximum trailer towing speeds.						

NOTE: The trailer tongue weight must be considered as part of the combined weight of occupants and cargo (ie. the GVWR), and the GVWR should never exceed the weight referenced on the Tire and Loading Information placard. Refer to “Tire Safety Information” in “Servicing And Maintenance” for further information.

Trailer And Tongue Weight

Never exceed the maximum tongue weight stamped on your bumper or trailer hitch.

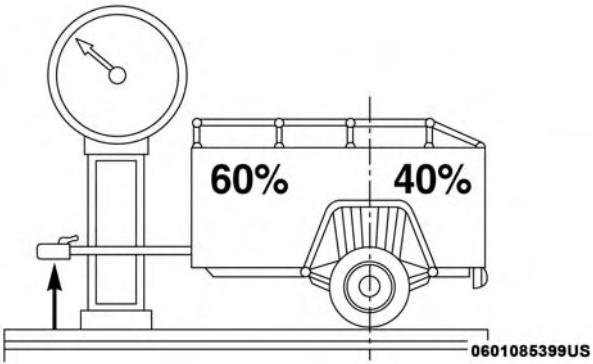

Consider the following items when computing the weight on the rear axle of the vehicle:

- The tongue weight of the trailer.
- The weight of any other type of cargo or equipment put in or on your vehicle.
- The weight of the driver and all passengers.

NOTE: Remember that everything put into or on the trailer adds to the load on your vehicle. Also, additional factory-installed options or dealer-installed options must be considered as part of the total load on your vehicle. Refer to the "Tire And Loading Information" placard for the maximum combined weight of occupants and cargo for your vehicle.

Towing Requirements — Tires

- Proper tire inflation pressures are essential to the safe and satisfactory operation of your vehicle. Refer to "Tires – General Information" in "Servicing And Maintenance" for proper tire inflation procedures.
- Check the trailer tires for proper tire inflation pressures before trailer usage.
- Check for signs of tire wear or visible tire damage before towing a trailer. Refer to "Tires – General Information" in "Servicing And Maintenance" for proper inspection procedure.
- When replacing tires, refer to "Tires – General Information" in "Servicing And Maintenance" for proper tire replacement procedures. Replacing tires with a higher load carrying capacity will not increase the vehicle's GVWR and GAWR limits.

Towing Requirements — Trailer Brakes

- Do **not** interconnect the hydraulic brake system or vacuum system of your vehicle with that of the trailer. This could cause inadequate braking and possible personal injury.
- An electronically actuated trailer brake controller is required when towing a trailer with electronically actuated brakes. When towing a trailer equipped with a hydraulic surge actuated brake system, an electronic brake controller is not required.
- Trailer brakes are recommended for trailers over 1,000 lbs (453 kg) and required for trailers in excess of 2,000 lbs (907 kg).

WARNING!

- **Do not connect trailer brakes to your vehicle's hydraulic brake lines. It can overload your brake system and cause it to fail. You might not have brakes when you need them and could have a collision.**
- **Towing any trailer will increase your stopping distance. When towing you should allow for additional space between your vehicle and the vehicle in front of you. Failure to do so could result in a collision.**

CAUTION!

If the trailer weighs more than 1,000 lbs (453 kg) loaded, it should have its own brakes and they should be of adequate capacity. Failure to do this could lead to accelerated brake lining wear, higher brake pedal effort, and longer stopping distances.

Towing Requirements — Trailer Lights And Wiring

Whenever you pull a trailer, regardless of the trailer size, stop lights and turn signals on the trailer are required for motoring safety.

The Trailer Tow Package will include a four–pin wiring harness. Use a factory-approved trailer harness and connector.

NOTE: Do not cut or splice wiring into the vehicles wiring harness.

The electrical connections are all complete to the vehicle but you must mate the harness to a trailer connector. Refer to the following illustration.

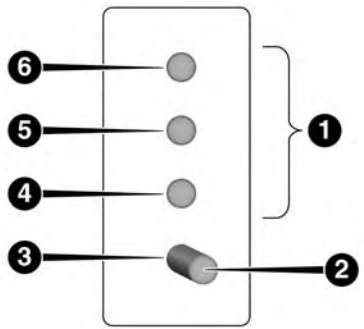

0601085400US

Four-Pin Connector

1 — Female Pins	4 — Park
2 — Male Pin	5 — Left Stop/Turn
3 — Ground	6 — Right Stop/Turn

Towing Tips

Before setting out on a trip, practice turning, stopping and backing the trailer in an area away from heavy traffic.

If using a manual transmission vehicle for trailer towing, all starts must be in first gear to avoid excessive clutch slippage.

Automatic Transmission — If Equipped

Select the DRIVE range when towing. The transmission controls include a drive strategy to avoid frequent shifting when towing. However, if frequent shifting does occur while in DRIVE, you can use the AutoStick shift control to manually select a lower gear.

NOTE: Using a lower gear while operating the vehicle under heavy loading conditions will improve performance and extend transmission life by reducing excessive shifting and heat buildup. This action will also provide better engine braking.

If you REGULARLY tow a trailer for more than 45 minutes of continuous operation, then change the transmission fluid and filter as specified for police, taxi, fleet, or frequent trailer towing. Refer to the “Maintenance Plan” for the proper maintenance intervals.

NOTE: Check the automatic transmission fluid level before towing.

AutoStick — If Equipped

- When using the AutoStick shift control, select the highest gear that allows for adequate performance and avoids frequent downshifts. For example, choose “4” if the desired speed can be maintained. Choose “3” or “2” if needed to maintain the desired speed.
- To prevent excess heat generation, avoid continuous driving at high RPM. Reduce vehicle speed as necessary to avoid extended driving at high RPM. Return to a higher gear or vehicle speed when grade and road conditions allow.

Electronic Speed Control — If Equipped

- Do not use in hilly terrain or with heavy loads.
- When using the speed control, if you experience speed drops greater than 10 mph (16 km/h), disengage until you can get back to cruising speed.
- Use speed control in flat terrain and with light loads to maximize fuel efficiency.

Cooling System

To reduce potential for engine and transmission overheating, take the following actions:

City Driving

When stopped for short periods of time, shift the transmission into NEUTRAL and increase engine idle speed.

Highway Driving

Reduce speed.

Air Conditioning

Turn off temporarily.

RECREATIONAL TOWING (BEHIND MOTORHOME, ETC.)

Towing This Vehicle Behind Another Vehicle

Towing Condition	Wheels OFF the Ground	Four-Wheel Drive Models
Flat Tow	NONE	**See Instructions** • Automatic transmission in PARK. • Manual transmission in gear (NOT in NEUTRAL [N]). • Transfer case in NEUTRAL (N). • Tow in forward direction.
Dolly Tow	Front	NOT ALLOWED
	Rear	NOT ALLOWED
On Trailer	ALL	OK

NOTE:
- When towing your vehicle, always follow applicable state and provincial laws. Contact state and provincial Highway Safety offices for additional details.
- For RHD models, refer to the Postal Supplement for Recreational Towing instructions.

Recreational Towing — Four-Wheel Drive Models

NOTE: The transfer case must be shifted into NEUTRAL (N), automatic transmission must be in PARK, and manual transmission must be in gear (NOT in NEUTRAL) for recreational towing.

CAUTION!

- **DO NOT dolly tow any 4WD vehicle. Towing with only one set of wheels on the ground (front or rear) will cause severe transmission and/or transfer case damage. Tow with all four wheels either ON the ground, or OFF the ground (using a vehicle trailer).**
- **Tow only in the forward direction. Towing this vehicle backwards can cause severe damage to the transfer case.**
- **Automatic transmissions must be placed in PARK for recreational towing.**
- **Manual transmissions must be placed in gear (not in Neutral) for recreational towing.**
- **Before recreational towing, perform the procedure outlined under "Shifting Into NEUTRAL (N)" to be certain that the transfer case is fully in NEUTRAL (N). Otherwise, internal damage will result.**

(Continued)

CAUTION! *(Continued)*

- **Towing this vehicle in violation of the above requirements can cause severe transmission and/or transfer case damage. Damage from improper towing is not covered under the New Vehicle Limited Warranty.**
- **Do not use a bumper-mounted clamp-on tow bar on your vehicle. The bumper face bar will be damaged.**

Shifting Into NEUTRAL (N)

Use the following procedure to prepare your vehicle for recreational towing.

WARNING!

You or others could be injured or killed if you leave the vehicle unattended with the transfer case in the NEUTRAL (N) position without first fully engaging the parking brake. The transfer case NEUTRAL (N) position disengages both the front and rear driveshafts from the powertrain, and will allow the vehicle to roll, even if the automatic transmission is in PARK (or manual transmission is in gear). The parking brake should always be applied when the driver is not in the vehicle.

CAUTION!

It is necessary to follow these steps to be certain that the transfer case is fully in NEUTRAL (N) before recreational towing to prevent damage to internal parts.

1. Bring the vehicle to a complete stop on level ground.
2. Press and hold the brake pedal.
3. Shift the automatic transmission into NEUTRAL or depress the clutch pedal on a manual transmission.
4. Turn the engine OFF.
5. Shift the transfer case lever into NEUTRAL (N).
6. Start the engine.
7. Shift the transmission into REVERSE.
8. Release the brake pedal (and clutch pedal on manual transmissions) for five seconds and ensure that there is no vehicle movement.
9. Repeat steps seven and eight with automatic transmission in DRIVE or manual transmission in first gear.
10. Turn the engine OFF.
11. Firmly apply the parking brake.
12. Shift the transmission into PARK or place manual transmission in gear (NOT in NEUTRAL).

CAUTION!

Damage to the transmission may occur if the transmission is shifted into PARK with the transfer case in NEUTRAL (N) and the engine running. With the transfer case in NEUTRAL (N) ensure that the engine is OFF before shifting the transmission into PARK.

13. Attach the vehicle to the tow vehicle using a suitable tow bar.
14. Release the parking brake.

Shifting Out of NEUTRAL (N)

Use the following procedure to prepare your vehicle for normal usage.

1. Bring the vehicle to a complete stop, leaving it connected to the tow vehicle.
2. Firmly apply the parking brake.
3. Turn the ignition to the ON/RUN position, but do not start the engine.

4. Press and hold the brake pedal.
5. Shift the transmission into NEUTRAL.
6. Shift the transfer case lever to the desired position.

NOTE: When shifting the transfer case out of NEUTRAL (N), the engine should remain OFF to avoid gear clash.

7. Shift the automatic transmission into PARK, or place manual transmission in NEUTRAL.
8. Release the brake pedal.
9. Disconnect vehicle from the tow vehicle.
10. Start the engine.
11. Press and hold the brake pedal.
12. Release the parking brake.
13. Shift the transmission into gear, release the brake pedal (and clutch pedal on manual transmissions), and check that the vehicle operates normally.

DRIVING TIPS

On-Road Driving Tips

Utility vehicles have higher ground clearance and a narrower track to make them capable of performing in a wide variety of off-road applications. Specific design characteristics give them a higher center of gravity than conventional passenger cars.

An advantage of the higher ground clearance is a better view of the road, allowing you to anticipate problems. They are not designed for cornering at the same speeds as conventional passenger cars any more than low-slung sports cars are designed to perform satisfactorily in off-road conditions. Avoid sharp turns or abrupt maneuvers. As with other vehicles of this type, failure to operate this vehicle correctly may result in loss of control or vehicle rollover.

Off-Road Driving Tips

Side Step Removal — If Equipped

NOTE: Prior to off-road usage, the side steps should be removed to prevent damage if so equipped.

1. Remove the two nuts from the bodyside.

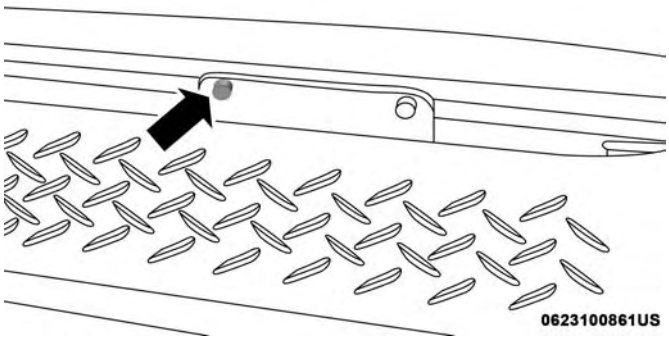

Bodyside Nut

2. Remove one bolt from the underside of the vehicle.

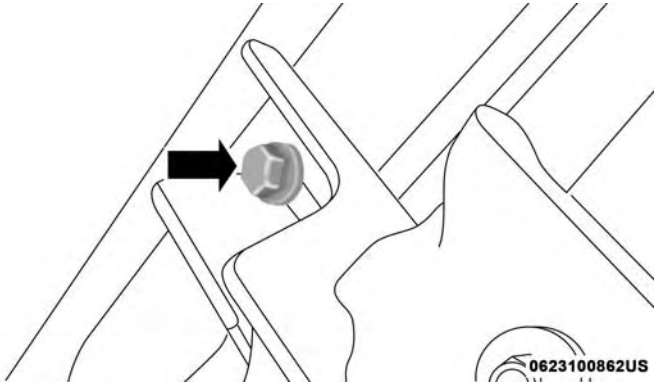

Underside Bolt

3. Remove the side step assembly.

The Basics Of Off-Road Driving

You will encounter many types of terrain driving off-road. You should be familiar with the terrain and area before proceeding. There are many types of surface conditions: hard-packed dirt, gravel, rocks, grass, sand, mud, snow and ice. Every surface has a different effect on your vehicle's steering, handling and traction. Controlling your vehicle is one of the keys to successful off-road driving, so always keep a firm grip on the steering wheel and maintain a good driving posture. Avoid sudden accelerations, turns

or braking. In most cases, there are no road signs, posted speed limits or signal lights. Therefore, you will need to use your own good judgment on what is safe and what is not. When on a trail, you should always be looking ahead for surface obstacles and changes in terrain. The key is to plan your future driving route while remembering what you are currently driving over.

CAUTION!

Never park your vehicle over dry grass or other combustible materials. The heat from your vehicle exhaust system could cause a fire.

WARNING!

Always wear your seat belt and firmly tie down cargo. Unsecured cargo can become projectiles in an off-road situation.

When To Use 4L (Low) Range

When off-road driving, shift into 4L (Low) for additional traction and control on slippery or difficult terrain, ascending or descending steep hills, and to increase low speed pulling power. This range should be limited to extreme situations such as deep snow, mud, steep inclines, or sand where additional low speed pulling power is needed. Vehicle speeds in excess of 25 mph (40 km/h) should be avoided when in 4L (Low) range.

CAUTION!

Do not use 4L (Low) range when operating the vehicle on dry pavement. Driveline hardware damage can result.

Simultaneous Brake And Throttle Operation

Many off-road driving conditions require the simultaneous use of the brake and throttle (two-footed driving). When climbing rocks, logs, or other stepped objects, using light brake pressure with light throttle will keep the vehicle from jerking or lurching. This technique is also used when you need to stop and restart a vehicle on a steep incline.

Driving In Snow, Mud And Sand

Snow

In heavy snow or for additional control and traction at slower speeds, shift the transmission into a low gear and the transfer case into 4L (Low) if necessary. Do not shift to a lower gear than necessary to maintain headway. Overrevving the engine can spin the wheels and traction will be

lost. If you start to slow to a stop, try turning your steering wheel no more than a 1/4 turn quickly back and forth, while still applying throttle. This will allow the tires to get a fresh "bite" and help maintain your momentum.

CAUTION!

On icy or slippery roads, do not downshift at high engine RPM or vehicle speeds, because engine braking may cause skidding and loss of control.

Mud

Deep mud creates a great deal of suction around the tires and is very difficult to get through. You should use second gear (manual transmission), or DRIVE (automatic transmission), with the transfer case in the 4L (Low) position to maintain your momentum. If you start to slow to a stop, try turning your steering wheel no more than a 1/4 turn quickly back and forth for additional traction. Mud holes pose an increased threat of vehicle damage and getting stuck. They are normally full of debris from previous vehicles getting stuck. As a good practice before entering any mud hole, get out and determine how deep it is, if there are any hidden obstacles and if the vehicle can be safely recovered if stuck.

Sand

Soft sand is very difficult to travel through with full tire pressure. When crossing soft, sandy spots in a trail, maintain your vehicle's momentum and do not stop. The key to driving in soft sand is using the appropriate tire pressure, accelerating slowly, avoiding abrupt maneuvers and maintaining the vehicle's momentum. If you are going to be driving on large soft sandy areas or dunes, reduce your tire pressure to a minimum of 15 psi (103 kPa) to allow for a greater tire surface area. Reduced tire pressure will drastically improve your traction and handling while driving on the soft sand, but you must return the tires to normal air pressure before driving on pavement or other hard surfaces. Be sure you have a way to reinflate the tires prior to reducing the pressure.

CAUTION!

Reduced tire pressures may cause tire unseating and total loss of air pressure. To reduce the risk of tire unseating, while at a reduced tire pressure, reduce your speed and avoid sharp turns or abrupt maneuvers.

Crossing Obstacles (Rocks And Other High Points)

While driving off-road, you will encounter many types of terrain. These varying types of terrain bring different types of obstacles. Before proceeding, review the path ahead to determine the correct approach and your ability to safely recover the vehicle if something goes wrong. Keeping a firm grip on the steering wheel, bring the vehicle to a complete stop and then inch the vehicle forward until it makes contact with the object. Apply the throttle lightly while holding a light brake pressure and ease the vehicle up and over the object.

WARNING!

Crossing obstacles can cause abrupt steering system loading which could cause you to loose control of your vehicle.

Using A Spotter

There are many times where it is hard to see the obstacle or determine the correct path. Determining the correct path can be extremely difficult when you are confronting many obstacles. In these cases have someone guide you over, through, or around the obstacle. Have the person stand a safe distance in front of you where they can see the obstacle, watch your tires and undercarriage, and guide you through.

Crossing Large Rocks

When approaching large rocks, choose a path which ensures you drive over the largest of them with your tires. This will lift your undercarriage over the obstacle. The tread of the tire is tougher and thicker than the side wall and is designed to take the abuse. Always look ahead and make every effort to cross the large rocks with your tires.

CAUTION!

- **Never attempt to straddle a rock that is large enough to strike your axles or undercarriage.**
- **Never attempt to drive over a rock which is large enough to contact the door sills.**

Crossing A Ravine, Gully, Ditch, Washout Or Rut

When crossing a ravine, gully, ditch, washout or a large rut, the angled approach is the key to maintaining your vehicle's mobility. Approach these obstacles at a 45-degree angle and let each tire go through the obstacle independently. You need to use caution when crossing large obstacles with steep sides. Do not attempt to cross any large obstacle with steep sides at

an angle great enough to put the vehicle at risk of a rollover. If you get caught in a rut, dig a small trench to the right or left at a 45-degree angle ahead of the front tires. Use the removed dirt to fill the rut ahead of the turnout you just created. You should now be able to drive out following the trench you just created at a 45-degree angle.

WARNING!

There is an increased risk of rollover when crossing an obstacle, at any angle, with steep sides.

Crossing Logs

To cross a log, approach it at a slight angle (approximately 10 to 15 degrees). This allows one front tire to be on top of the log while the other just starts to climb the log. While climbing the log, modulate your brake and accelerator to avoid spinning the log out from under your tires. Then ease the vehicle off the log using your brakes.

CAUTION!

Do not attempt to cross a log with a greater diameter than the running ground clearance or the vehicle will become high-centered.

Getting High-Centered

If you get hung up or high-centered on an object, get out of the vehicle and try to determine what the vehicle is hung up on, where it is contacting the underbody and what is the best direction to recover the vehicle. Depending on what you are in contact with, jack the vehicle up and place a few rocks under the tires so the weight is off of the high point when you let the vehicle down. You can also try rocking the vehicle or winching the vehicle off the object.

CAUTION!

Winching or rocking the vehicle off hard objects increases the risk of underbody damage.

Hill Climbing

Hill climbing requires good judgment and a good understanding of your abilities and your vehicle's limitations. Hills can cause serious problems. Some are just too steep to climb and should not be attempted. You should always feel confident with the vehicle and your abilities. You should always climb hills straight up and down. Never attempt to climb a hill on an angle.

Before Climbing A Steep Hill

As you approach a hill, consider its grade or steepness. Determine if it is too steep. Look to see what the traction is on the hill side trail. Is the trail straight up and down? What is on top and the other side? Are there ruts, rocks, branches or other obstacles on the path? Can you safely recover the vehicle if something goes wrong? If everything looks good and you feel confident, shift the transmission into a lower gear with 4L (Low) engaged, and proceed with caution, maintaining your momentum as you climb the hill.

Driving Up Hill

Once you have determined your ability to proceed and have shifted into the appropriate gear, line your vehicle up for the straightest possible run. Accelerate with an easy constant throttle and apply more power as you start up the hill. Do not race forward into a steep grade; the abrupt change of grade could cause you to lose control. If the front end begins to bounce, ease off the throttle slightly to bring all four tires back on the ground. As you approach the crest of the hill, ease off the throttle and slowly proceed over the top. If the wheels start to slip as you approach the crest of a hill, ease off the accelerator and maintain headway by turning the steering wheel no more than a 1/4 turn quickly back and forth. This will provide a fresh "bite" into the surface and will usually provide enough traction to complete the climb. If you do not make it to the top, place the vehicle in REVERSE and back straight down the grade using engine resistance along with the vehicle brakes.

WARNING!

Never attempt to climb a hill at an angle or turn around on a steep grade. Driving across an incline increases the risk of a rollover, which may result in severe injury.

Driving Downhill

Before driving down a steep hill, you need to determine if it is too steep for a safe descent. What is the surface traction? Is the grade too steep to maintain a slow, controlled descent? Are there obstacles? Is it a straight descent? Is there plenty of distance at the base of the hill to regain control if the vehicle descends to fast? If you feel confident in your ability to proceed, then make sure you are in 4L (Low) and proceed with caution. Allow engine braking to control the descent and apply your brakes, if necessary, but do not allow the tires to lock.

WARNING!

Do not descend a steep grade in NEUTRAL. Use vehicle brakes in conjunction with engine braking. Descending a grade too fast could cause you to lose control and be seriously injured or killed.

Driving Across An Incline

If at all possible, avoid driving across an incline. If it is necessary, know your vehicle's abilities. Driving across an incline places more weight on the downhill wheels, which increases the possibilities of a downhill slide or rollover. Make sure the surface has good traction with firm and stable soils. If possible, transverse the incline at an angle heading slightly up or down.

WARNING!

Driving across an incline increases the risk of a rollover, which may result in severe injury.

If You Stall Or Begin To Lose Headway

If you stall or begin to lose headway while climbing a steep hill, allow your vehicle to come to a stop and immediately apply the brake. Restart the engine and shift into REVERSE. Back slowly down the hill allowing engine braking to control the descent and apply your brakes, if necessary, but do not allow the tires to lock.

WARNING!

If the engine stalls or you lose headway or cannot make it to the top of a steep hill or grade, never attempt to turn around. To do so may result in tipping and rolling the vehicle, which may result in severe injury. Always back carefully straight down a hill in REVERSE. Never back down a hill in NEUTRAL using only the vehicle brakes. Never drive diagonally across a hill, always drive straight up or down.

Driving Through Water

Extreme care should be taken crossing any type of water. Water crossings should be avoided, if possible, and only be attempted when necessary in a safe, responsible manner. You should only drive through areas which are designated and approved. You should tread lightly and avoid damage

to the environment. You should know your vehicle's abilities and be able to recover it if something goes wrong. You should never stop or shut a vehicle off when crossing deep water unless you ingested water into the engine air intake. If the engine stalls, do not attempt to restart it. Determine if it has ingested water first. The key to any crossing is low and slow. Shift into first gear (manual transmission), or DRIVE (automatic transmission), with the transfer case in the 4L (Low) position and proceed very slowly with a constant slow speed {3 to 5 mph (5 to 8 km/h) maximum} and light throttle. Keep the vehicle moving; do not try to accelerate through the crossing. After crossing any water higher than the bottom of the axle differentials, you should inspect all of the vehicle fluids for signs of water ingestion.

CAUTION!

- **Water ingestion into the axles, transmission, transfer case, engine or vehicle interior can occur if you drive too fast or through too deep of water. Water can cause permanent damage to engine, driveline or other vehicle components, and your brakes will be less effective once wet and/or muddy.**

(Continued)

CAUTION! *(Continued)*

- **When driving through water, do not exceed 5 mph (8 km/h). Always check water depth before entering as a precaution, and check all fluids afterward. Driving through water may cause damage that may not be covered by the New Vehicle Limited Warranty.**

Before You Cross Any Type Of Water

As you approach any type of water, you need to determine if you can cross it safely and responsibly. If necessary, get out and walk through the water or probe it with a stick. You need to be sure of its depth, approach angle, current and bottom condition. Be careful of murky or muddy waters; check for hidden obstacles. Make sure you will not be intruding on any wildlife, and you can recover the vehicle if necessary. The key to a safe crossing is the water depth, current and bottom conditions. On soft bottoms, the vehicle will sink in, effectively increasing the water level on the vehicle. Be sure to consider this when determining the depth and the ability to safely cross.

Crossing Puddles, Pools, Flooded Areas Or Other Standing Water

Puddles, pools, flooded or other standing water areas normally contain murky or muddy waters. These water types normally contain hidden obstacles and make it difficult to determine an accurate water depth, approach angle, and bottom condition. Murky or muddy water holes are where you want to hook up tow straps prior to entering. This makes for a faster, cleaner and easier vehicle recovery. If you are able to determine you can safely cross, than proceed using the low and slow method.

CAUTION!

Muddy waters can reduce the cooling system effectiveness by depositing debris onto the radiator.

Crossing Ditches, Streams, Shallow Rivers Or Other Flowing Water

Flowing water can be extremely dangerous. Never attempt to cross a fast running stream or river even in shallow water. Fast moving water can easily push your vehicle downstream, sweeping it out of control. Even in very shallow water, a high current can still wash the dirt out from around your tires putting you and your vehicle in jeopardy. There is still a high risk of personal injury and vehicle damage with slower water currents in depths greater than the vehicle's running ground clearance. You should never attempt to cross flowing water which is deeper than the vehicle's running ground clearance. Even the slowest current can push the heaviest vehicle downstream and out of control if the water is deep enough to push on the large surface area of the vehicle's body. Before you proceed, determine the speed of the current, the water's depth, approach angle, bottom condition and if there are any obstacles. Then cross at an angle heading slightly upstream using the low and slow technique.

WARNING!

Never drive through fast moving deep water. It can push your vehicle downstream, sweeping it out of control. This could put you and your passengers at risk of injury or drowning.

After Driving Off-Road

Off-road operation puts more stress on your vehicle than does most on-road driving. After going off-road, it is always a good idea to check for damage. That way you can get any problems taken care of right away and have your vehicle ready when you need it.

- Completely inspect the underbody of your vehicle. Check tires, body structure, steering, suspension, and exhaust system for damage.
- Inspect the radiator for mud and debris and clean as required.
- Check threaded fasteners for looseness, particularly on the chassis, drivetrain components, steering, and suspension. Retighten them, if required, and torque to the values specified in the Service Manual.
- Check for accumulations of plants or brush. These things could be a fire hazard. They might hide damage to fuel lines, brake hoses, axle pinion seals, and propeller shafts.
- After extended operation in mud, sand, water, or similar dirty conditions, have the radiator, fan, brake rotors, wheels, brake linings, and axle yokes inspected and cleaned as soon as possible.

WARNING!

Abrasive material in any part of the brakes may cause excessive wear or unpredictable braking. You might not have full braking power when you need it to prevent a collision. If you have been operating your vehicle in dirty conditions, get your brakes checked and cleaned as necessary.

- If you experience unusual vibration after driving in mud, slush or similar conditions, check the wheels for impacted material. Impacted material can cause a wheel imbalance and freeing the wheels of it will correct the situation.

IN CASE OF EMERGENCY

CONTENTS

■ HAZARD WARNING FLASHERS 334
■ BULB REPLACEMENT 334
□ Replacement Bulbs 334
□ Bulb Replacement 335
■ FUSES 338
□ General Information 338
□ Totally Integrated Power Module 339
■ JACKING AND TIRE CHANGING 344
□ Jack Location 344
□ Spare Tire Removal 345
□ Preparations For Jacking 345
□ Jacking Instructions 346
□ Road Tire Installation 348
■ JUMP STARTING 349
□ Preparations For Jump Start 350
□ Jump Starting Procedure 351
■ IF YOUR ENGINE OVERHEATS 352
■ GEAR SELECTOR OVERRIDE 353
■ FREEING A STUCK VEHICLE 354
■ TOWING A DISABLED VEHICLE 355
□ Without The Ignition Key 357
□ Four–Wheel Drive Models 357
□ Emergency Tow Hooks — If Equipped 358
■ ENHANCED ACCIDENT RESPONSE SYSTEM (EARS) 358
■ EVENT DATA RECORDER (EDR) 358

HAZARD WARNING FLASHERS

The Hazard Warning flasher switch is located on the instrument panel below the climate controls.

Push the switch to turn on the Hazard Warning flasher. When the switch is activated, all directional turn signals will flash on and off to warn oncoming traffic of an emergency. Push the switch a second time to turn off the Hazard Warning flashers.

This is an emergency warning system and it should not be used when the vehicle is in motion. Use it when your vehicle is disabled and it is creating a safety hazard for other motorists.

When you must leave the vehicle to seek assistance, the Hazard Warning flashers will continue to operate even though the ignition is placed in the OFF position.

NOTE: With extended use the Hazard Warning flashers may wear down your battery.

BULB REPLACEMENT

Replacement Bulbs

Interior Bulbs

	Bulb Number
Automatic Transmission Indicator Lamp	658
Heater Control Lamps (2)	194
Rocker Switch Indicator Lamp (Rear Window Defogger, and Rear Wash/Wipe)	**
Soundbar Dome Lamp	912
** Bulbs only available from authorized dealer.	

Exterior Bulbs

	Bulb Number
Headlamps (2)	H13
Premium Head Lamps	LED – (Serviced At Authorized Dealer)
Front Park/Turn Signal Lamps (2)	3157NA
Front Side Marker Lamps (2)	168
Fog Lamps	PSX24W
Rear Stop/Tail/Turn Lamps (2)	3157
Center High-Mounted Stop Lamp	LED – (Serviced At Authorized Dealer)
Backup Lamps (2)	3157
License Lamp	194
NOTE: Numbers refer to commercial bulb types that can be purchased from your local authorized dealer. If a bulb needs to be replaced, visit your authorized dealer or refer to the applicable Service Manual.	

Bulb Replacement

NOTE: Lens fogging can occur under certain atmospheric conditions. This will usually clear as atmospheric conditions change to allow the condensation to change back into a vapor. Turning the lamps on will usually accelerate the clearing process.

Headlamp

1. Open hood and support using prop rod.
2. Remove the front grille. Turn the retainers along the top 1/4 turn counterclockwise and remove.
3. Pull the bottom of the grille away starting at one side and working toward the other.
4. Turn both park and turn signal socket assemblies 1/4 turn counterclockwise and remove.
5. Remove the four screws holding the metal retaining ring.

6. Remove the lamp from the collar.
7. Grasp the bulb and turn 1/4 turn counterclockwise.
8. Pull the bulb from the housing.
9. Push connector locking tab to the unlock position.
10. Remove connector from bulb.
11. Push connector onto new bulb base, and push the connector locking tab to the lock position.

CAUTION!

Do not touch the new bulb with your fingers. Oil contamination will severely shorten bulb life. If the bulb comes in contact with any oily surface, clean the bulb with rubbing alcohol.

12. Reinstall bulb housing. Rotate the bulb 1/4 turn clockwise.

Front Park/Turn Signal

1. Remove the front grille. Turn the retainers along the top 1/4 turn counterclockwise and remove.
2. Pull the bottom of the grille away starting at one side and working toward the other.
3. Turn the socket assembly 1/4 turn counterclockwise and remove from housing. Pull the bulb straight from the socket to replace.

Front Side Marker

1. Reach under the front fender flare and locate the front side marker socket.
2. Turn the socket assembly counterclockwise 1/3 turn and remove it from the housing. Pull the bulb straight from the socket to replace.

Front Fog Lamp

1. Reach under the vehicle to access the back of the front fog lamp.
2. Disconnect the wire harness connector from the front fog lamp connector receptacle.
3. Firmly grasp the bulb by the two latch features and squeeze them together to unlock the bulb from the back of the front fog lamp housing.
4. Pull the bulb straight out from the keyed opening in the housing and then connect the replacement bulb.

CAUTION!

Do not touch the new bulb with your fingers. Oil contamination will severely shorten bulb life. If the bulb comes in contact with any oily surface, clean the bulb with rubbing alcohol.

Rear Tail, Stop, Turn Signal, And Backup Lamp

1. Remove the two inboard screws attaching the tail light housing to the body. **DO NOT REMOVE THE OUTBOARD SCREWS AT ANY TIME.**

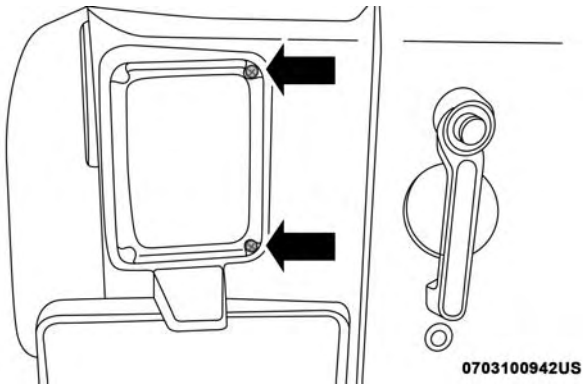

Inboard Screw Location

2. Separate the housing from the body by pushing the lamp inboard while pulling the lamp away from the body.
3. Rotate the appropriate socket 1/4 turn counterclockwise, then remove it from the housing.
4. Pull the bulb straight from the socket to replace.

Center High-Mounted Stop Lamp (CHMSL)

The stop lamp is mounted on a bracket that extends upward from the tailgate behind the spare tire. If service is needed, obtain the LED/Cover Assembly from your local authorized dealer.

1. Remove the spare tire.
2. Remove the four screws holding the lens/cover in place on the spare tire carrier.
3. Disconnect the wire harness from the back of the LED cover.

FUSES

WARNING!

- **When replacing a blown fuse, always use an appropriate replacement fuse with the same amp rating as the original fuse. Never replace a fuse with another fuse of higher amp rating. Never replace a blown fuse with metal wires or any other material. Failure to use proper fuses may result in serious personal injury, fire and/or property damage.**
- **Before replacing a fuse, make sure that the ignition is off and that all the other services are switched off and/or disengaged.**
- **If the replaced fuse blows again, contact an authorized dealer.**
- **If a general protection fuse for safety systems (air bag system, braking system), power unit systems (engine system, gearbox system) or steering system blows, contact an authorized dealer.**

General Information

The fuses protect electrical systems against excessive current.

When a device does not work, you must check the fuse element inside the blade fuse for a break/melt.

Also, please be aware that when using power outlets for extended periods of time with the engine off may result in vehicle battery discharge.

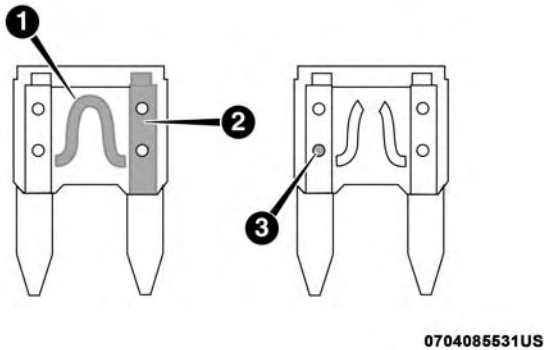

Blade Fuses

1 — Fuse Element
2 — Blade Fuse with a good/functional fuse element.
3 — Blade fuse with a NOT functional / BAD fuse element (blown fuse).

Totally Integrated Power Module

The Totally Integrated Power Module is located in the engine compartment near the battery. This center contains cartridge fuses, mini fuses, and relays. A label that identifies each component is printed on the inside of the cover.

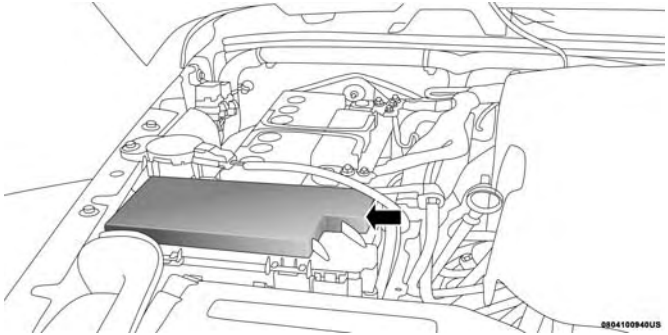

Totally Integrated Power Module

Cavity	Cartridge Fuse	Mini Fuse	Description
J1	–	–	–
J2	30 Amp Pink	–	Transfer Case Module
J3	–	–	–
J4	25 Amp Clear	–	Driver Door Node
J5	25 Amp Clear	–	Passenger Door Node
J6	40 Amp Green	–	Anti-Lock Brake System (ABS) Pump/ Stability Control System
J7	30 Amp Pink	–	Anti-Lock Brake System (ABS) Valve/ Stability Control System
J8	–	–	–

Cavity	Cartridge Fuse	Mini Fuse	Description
J9	40 Amp Green	–	PZEV Sec Motor/Flex Fuel – If Equipped
J10	30 Amp Pink	–	Headlamp Wash Relay/Manifold Tuning Valve
J11	30 Amp Pink	–	Sway Bar
J12	–	–	–
J13	60 Amp Yellow	–	Ignition Off Draw (IOD) – Main
J14	40 Amp Green	–	Rear Defroster
J15	40 Amp Green	–	Front Blower
J17	40 Amp Green	–	Starter Solenoid
J18	20 Amp Blue	–	Powertrain Control Module (PCM) Trans Range
J19	60 Amp Yellow	–	Radiator Fan
J20	30 Amp Pink	–	Front Wiper LO/HI
J21	20 Amp Blue	–	Front/Rear Washer
J22	–	–	Spare
M1	–	15 Amp Blue	Center High-Mounted Stop Light (CHMSL)/ Switch Stop Lamp Feed
M2	–	20 Amp Yellow	Relay Trailer Lighting (Stop lamp)
M3	–	20 Amp Yellow	Front/Rear Axle Locker Relay
M4	–	2 Amp Grey	Clock Spring

Cavity	Cartridge Fuse	Mini Fuse	Description
M5	–	25 Amp Clear	Power Inverter – If Equipped
M6	–	20 Amp Yellow	Power Outlet #1/Rain Sensor
M7	–	20 Amp Yellow	Power Outlet #2 (BATT/ACC SELECT)
M8	–	20 Amp Yellow	Front Heated Seat
M9	–	20 Amp Yellow	Rear Heated Seat – If Equipped
M10	–	15 Amp Blue	Ignition Off Draw – Vehicle Entertainment System, Satellite Digital Audio Receiver (SDARS), DVD, Hands-Free Module, RADIO, Antenna, Universal Garage Door Opener, Vanity Lamp
M11	–	10 Amp Red	(Ignition Off Draw) Climate Control System, Underhood Lamp
M12	–	30 Amp Green	Amplifier
M13	–	20 Amp Yellow	Ignition Off Draw – Cabin Compartment Node, Wireless Control Module, SIREN, Multifunction Control Switch
M14	–	20 Amp Yellow	Trailer Tow (Export Only)

Cavity	Cartridge Fuse	Mini Fuse	Description
M15	–	20 Amp Yellow	Climate Control System, Rear View Mirror, Cabin Compartment Node, Transfer Case Switch, Multi-Function Control Switch, Tire Pressure Monitor, Glow Plug Module – Export Diesel Only
M16	–	10 Amp Red	Airbag Module
M17	–	15 Amp Blue	Left Tail/License/Park Lamp
M18	–	15 Amp Blue	Right Tail/Park/Run Lamp
M19	–	25 Amp Clear	Auto Shut Down (ASD #1 and #2)
M20	–	15 Amp Blue	Cabin Compartment Node Interior Light, Switch Bank
M21	–	20 Amp Yellow	Auto Shut Down (ASD #3)
M22	–	10 Amp Red	Right Horn (HI/LOW)
M23	–	10 Amp Red	Left Horn (HI/LOW)
M24	–	25 Amp Clear	Rear Wiper
M25	–	20 Amp Yellow	Fuel Pump, Diesel Lift Pump – Export Only
M26	–	10 Amp Red	Power Window Switch, Driver Window Switch
M27	–	10 Amp Red	Ignition Switch Feed, Wireless Module
M28	–	10 Amp Red	Powertrain Control Module
M29	–	10 Amp Red	Powertrain

Cavity	Cartridge Fuse	Mini Fuse	Description
M30	–	15 Amp Blue	Wiper Motor Frt, J1962 Diagnostic Feed
M31	–	20 Amp Yellow	Backup Lamps
M32	–	10 Amp Red	Airbag Controller, TT EUROPE
M33	–	10 Amp Red	Powertrain Controller
M34	–	10 Amp Red	Park Assist, Climate Control System, Headlamp Wash, Compass
M35	–	10 Amp Red	Heated Mirrors
M36	–	20 Amp Yellow	Power Outlet
M37	–	10 Amp Red	Anti-Lock Brake System, Electronic Stability Control, Stop Lamp Switch, Fuel Pump Relay
M38	–	25 Amp Clear	Lock/Unlock Motors

CAUTION!

- **When installing the Integrated Power Module cover, it is important to ensure the cover is properly positioned and fully latched. Failure to do so may allow water to get into the Integrated Power Module, and possibly result in an electrical system failure.**

(Continued)

CAUTION! ***(Continued)***

- **When replacing a blown fuse, it is important to use only a fuse having the correct amperage rating. The use of a fuse with a rating other than indicated may result in a dangerous electrical system overload. If a properly rated fuse continues to blow, it indicates a problem in the circuit that must be corrected.**

JACKING AND TIRE CHANGING

WARNING!

- **Do not attempt to change a tire on the side of the vehicle close to moving traffic. Pull far enough off the road to avoid the danger of being hit when operating the jack or changing the wheel.**
- **Being under a jacked-up vehicle is dangerous. The vehicle could slip off the jack and fall on you. You could be crushed. Never put any part of your body under a vehicle that is on a jack. If you need to get under a raised vehicle, take it to a service center where it can be raised on a lift.**
- **Never start or run the engine while the vehicle is on a jack.**
- **The jack is designed to be used as a tool for changing tires only. The jack should not be used to lift the vehicle for service purposes. The vehicle should be jacked on a firm level surface only. Avoid ice or slippery areas.**

Jack Location

The jack and lug wrench are located in the rear storage compartment.

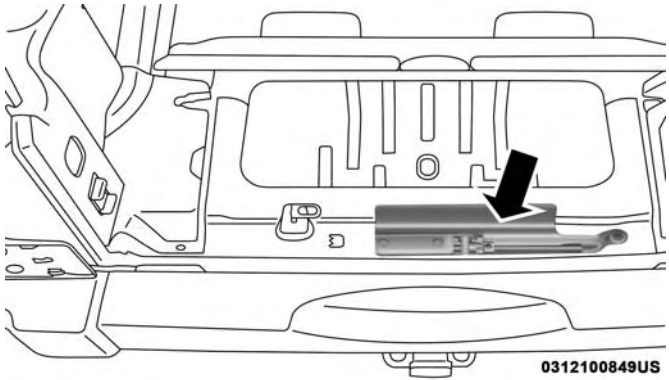

Jack Storage

NOTE: Turn the black plastic wing nut counterclockwise to loosen the jack from the storage bin.

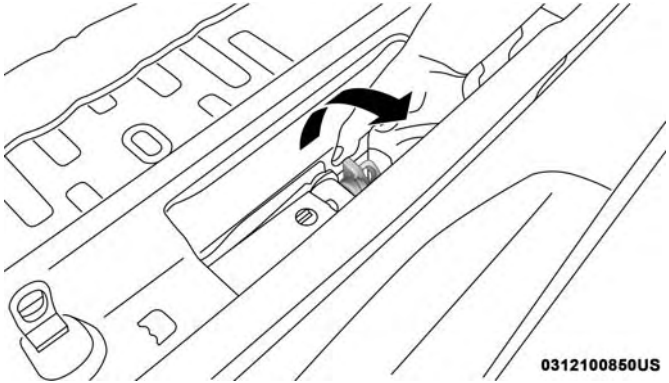

Plastic Wing Nut Location

Spare Tire Removal

To remove the spare tire from the carrier, remove the tire cover, if equipped, and remove the lug nuts with the lug wrench turning them counterclockwise.

NOTE: If you have added aftermarket accessories to the spare tire mounted carrier, it cannot exceed a gross weight of 85 lbs (38.5 kg) including the weight of the spare tire.

Preparations For Jacking

1. Park on a firm, level surface. Avoid ice or slippery areas.

WARNING!

Do not attempt to change a tire on the side of the vehicle close to moving traffic, pull far enough off the road to avoid being hit when operating the jack or changing the wheel.

2. Turn on the Hazard Warning flasher.
3. Apply the parking brake.
4. Shift the automatic transmission into PARK, or a manual transmission into REVERSE.
5. Turn the ignition to LOCK.
6. Block both the front and rear of the wheel diagonally opposite the jacking position. For example, if the right front wheel is being changed, block the left rear wheel.

NOTE: Passengers should not remain in the vehicle when the vehicle is being jacked.

Jacking Instructions

WARNING!

Carefully follow these tire changing warnings to help prevent personal injury or damage to your vehicle:

- **Always park on a firm, level surface as far from the edge of the roadway as possible before raising the vehicle.**
- **Turn on the Hazard Warning flasher.**
- **Block the wheel diagonally opposite the wheel to be raised.**
- **Set the parking brake firmly and set an automatic transmission in PARK; a manual transmission in REVERSE.**
- **Never start or run the engine with the vehicle on a jack.**
- **Do not get under the vehicle when it is on a jack. If you need to get under a raised vehicle, take it to a service center where it can be raised on a lift.**
- **Only use the jack in the positions indicated and for lifting this vehicle during a tire change.**
- **If working on or near a roadway, be extremely careful of motor traffic.**

(Continued)

WARNING! ***(Continued)***

- **To assure that spare tires, flat or inflated, are securely stowed, spares must be stowed with the valve stem facing the ground.**

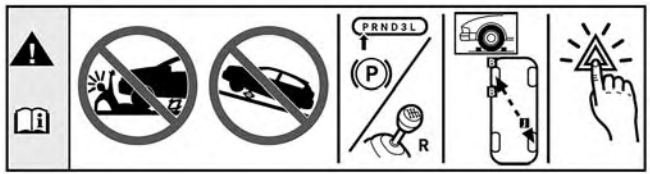

060600714

Jack Warning Label

CAUTION!

Do not attempt to raise the vehicle by jacking on locations other than those indicated.

1. Remove the spare tire, jack and tools from the stored location.
2. Loosen (but do not remove) the wheel lug nuts by turning them to the left one turn while the wheel is still on the ground.
3. Assemble the jack and jacking tools. Connect the jack handle driver to the extension, then to the lug wrench.
4. Operate the jack from the front or the rear of the vehicle. Place the jack under the axle tube, as shown. **Do not raise the vehicle until you are sure the jack is fully engaged.**

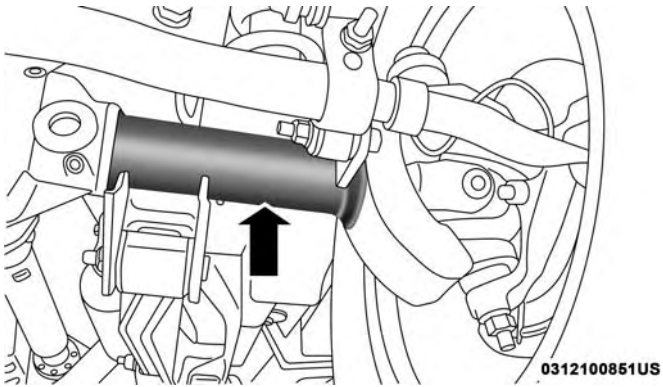

Front Jacking Location

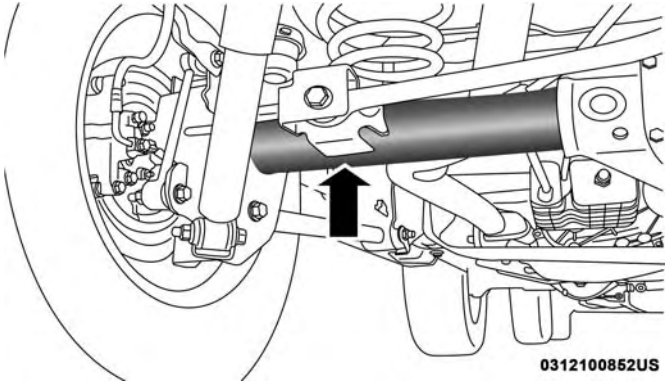

Rear Jacking Location

5. Raise the vehicle by turning the jack screw clockwise. Raise the vehicle only until the tire just clears the surface and enough clearance is obtained to install the spare tire. Minimum tire lift provides maximum stability.

WARNING!

Raising the vehicle higher than necessary can make the vehicle less stable. It could slip off the jack and hurt someone near it. Raise the vehicle only enough to remove the tire.

6. Remove the lug nuts and wheel.
7. Position the spare wheel/tire on the vehicle and install the lug nuts with the cone-shaped end toward the wheel. Lightly tighten the lug nuts clockwise.

WARNING!

To avoid the risk of forcing the vehicle off the jack, do not tighten the wheel nuts fully until the vehicle has been lowered. Failure to follow this warning may result in serious injury.

8. Lower the vehicle by turning the jack screw to the left, and remove the jack.
9. Finish tightening the lug nuts. Push down on the wrench while tightening for increased leverage. Alternate nuts until each nut has been tightened twice. Refer to "Torque Specifications" in "Technical Specifications" for correct lug nut torque.
10. Remove the jack assembly and wheel blocks.
11. Secure the tire, jack, and tools in their proper locations.

WARNING!

A loose tire or jack thrown forward in a collision or hard stop, could endanger the occupants of the vehicle. Always stow the jack parts and the spare tire in the places provided.

Road Tire Installation

1. Mount the road tire on the axle.
2. Install the remaining lug nuts with the cone shaped end of the nut toward the wheel. Lightly tighten the lug nuts.

WARNING!

To avoid the risk of forcing the vehicle off the jack, do not tighten the wheel nuts fully until the vehicle has been lowered. Failure to follow this warning may result in serious injury.

3. Lower the vehicle to the ground by turning the jack handle counterclockwise.
4. Finish tightening the lug nuts. Push down on the wrench while at the end of the handle for increased leverage. Tighten the lug nuts in a star pattern until each nut has been tightened twice. For the correct lug nut torque refer to "Torque Specifications" in "Technical Specifications". If in doubt about the correct tightness, have them checked with a torque wrench by your authorized dealer or service station.
5. After 25 miles (40 km), check the lug nut torque with a torque wrench to ensure that all lug nuts are properly seated against the wheel.

JUMP STARTING

If your vehicle has a discharged battery, it can be jump started using a set of jumper cables and a battery in another vehicle, or by using a portable battery booster pack. Jump starting can be dangerous if done improperly, so please follow the procedures in this section carefully.

WARNING!

Do not attempt jump starting if the battery is frozen. It could rupture or explode and cause personal injury.

CAUTION!

Do not use a portable battery booster pack or any other booster source with a system voltage greater than 12 Volts or damage to the battery, starter motor, alternator or electrical system may occur.

NOTE: When using a portable battery booster pack, follow the manufacturer's operating instructions and precautions.

Preparations For Jump Start

The battery in your vehicle is located in the right rear of the engine compartment, behind the Power Distribution Center.

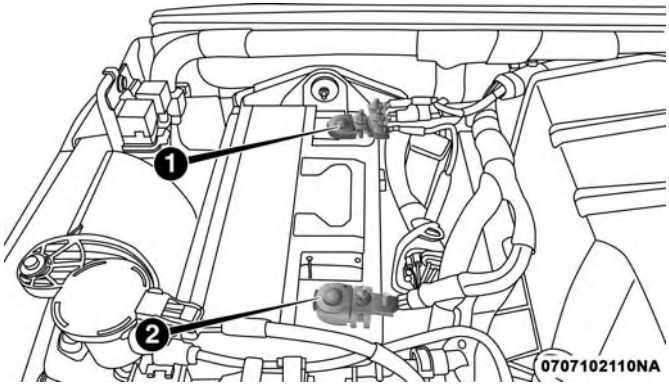

Battery Posts

1 — Positive Battery Post
2 — Negative Battery Post

WARNING!

- **Take care to avoid the radiator cooling fan whenever the hood is raised. It can start anytime the ignition switch is ON. You can be injured by moving fan blades.**
- **Remove any metal jewelry such as rings, watch bands and bracelets that could make an inadvertent electrical contact. You could be seriously injured.**
- **Batteries contain sulfuric acid that can burn your skin or eyes and generate hydrogen gas which is flammable and explosive. Keep open flames or sparks away from the battery.**

1. Apply the parking brake, shift the automatic transmission into PARK (manual transmission in NEUTRAL) and turn the ignition to LOCK.
2. Turn off the heater, radio, and all unnecessary electrical accessories.
3. If using another vehicle to jump start the battery, park the vehicle within the jumper cables reach, set the parking brake and make sure the ignition is OFF.

WARNING!

Do not allow vehicles to touch each other as this could establish a ground connection and personal injury could result.

Jump Starting Procedure

WARNING!

Failure to follow this jump starting procedure could result in personal injury or property damage due to battery explosion.

CAUTION!

Failure to follow these procedures could result in damage to the charging system of the booster vehicle or the discharged vehicle.

NOTE: Make sure at all times that unused ends of jumper cables are not contacting each other or either vehicle while making connections.

Connecting The Jumper Cables

1. Connect the positive **(+)** end of the jumper cable to the remote positive **(+)** post of the discharged vehicle.
2. Connect the opposite end of the positive **(+)** jumper cable to the positive **(+)** post of the booster battery.
3. Connect the negative end **(-)** of the jumper cable to the negative **(-)** post of the booster battery.
4. Connect the opposite end of the negative **(-)** jumper cable to a good engine ground (exposed metal part of the discharged vehicle's engine) away from the battery and the fuel injection system.

WARNING!

Do not connect the jumper cable to the negative (-) post of the discharged battery. The resulting electrical spark could cause the battery to explode and could result in personal injury. Only use the specific ground point, do not use any other exposed metal parts.

5. Start the engine in the vehicle that has the booster battery, let the engine idle a few minutes, and then start the engine in the vehicle with the discharged battery.

CAUTION!

Do not run the booster vehicle engine above 2000 rpm since it provides no charging benefit, wastes fuel and can damage booster vehicle engine.

6. Once the engine is started, remove the jumper cables in the reverse sequence:

Disconnecting The Jumper Cables

1. Disconnect the negative **(-)** end of the jumper cable from the engine ground of the vehicle with the discharged battery.
2. Disconnect the opposite end of the negative **(-)** jumper cable from the negative **(-)** post of the booster battery.
3. Disconnect the positive **(+)** end of the jumper cable from the positive **(+)** post of the booster battery.
4. Disconnect the opposite end of the positive **(+)** jumper cable from the remote positive **(+)** post of the discharged vehicle.
5. Reinstall the protective cover over the remote positive **(+)** post of the discharged vehicle.

If frequent jump starting is required to start your vehicle you should have the battery and charging system tested at an authorized dealer.

CAUTION!

Accessories plugged into the vehicle power outlets draw power from the vehicle's battery, even when not in use (i.e., cellular devices, etc.). Eventually, if plugged in long enough without engine operation, the vehicle's battery will discharge sufficiently to degrade battery life and/or prevent the engine from starting.

IF YOUR ENGINE OVERHEATS

In any of the following situations, you can reduce the potential for overheating by taking the appropriate action.

- On the highways — slow down.
- In city traffic — while stopped, shift transmission into NEUTRAL, but do not increase engine idle speed.

CAUTION!

Driving with a hot cooling system could damage your vehicle. If the temperature gauge reads HOT (H), pull

(Continued)

CAUTION! *(Continued)*

over and stop the vehicle. Idle the vehicle with the air conditioner turned off until the pointer drops back into the normal range. If the pointer remains on HOT (H), and you hear continuous chimes, turn the engine off immediately and call for service.

NOTE: There are steps that you can take to slow down an impending overheat condition:

- If your air conditioner (A/C) is on, turn it off. The A/C system adds heat to the engine cooling system and turning the A/C off can help remove this heat.
- You can also turn the temperature control to maximum heat, the mode control to floor and the blower control to high. This allows the heater core to act as a supplement to the radiator and aids in removing heat from the engine cooling system.

WARNING!

You or others can be badly burned by hot engine coolant (antifreeze) or steam from your radiator. If you see or hear steam coming from under the hood, do not

(Continued)

WARNING! *(Continued)*

open the hood until the radiator has had time to cool. Never try to open a cooling system pressure cap when the radiator or coolant bottle is hot.

GEAR SELECTOR OVERRIDE

If a malfunction occurs and the gear selector cannot be moved out of the PARK position, you can use the following procedure to temporarily move the gear selector:

1. Turn the engine OFF.
2. Firmly apply the parking brake.
3. Using a small screwdriver or similar tool, remove the gear selector override access cover (located to the right of the gear selector).
4. Turn the ignition to the ACC or ON/RUN position, but do not start the engine.

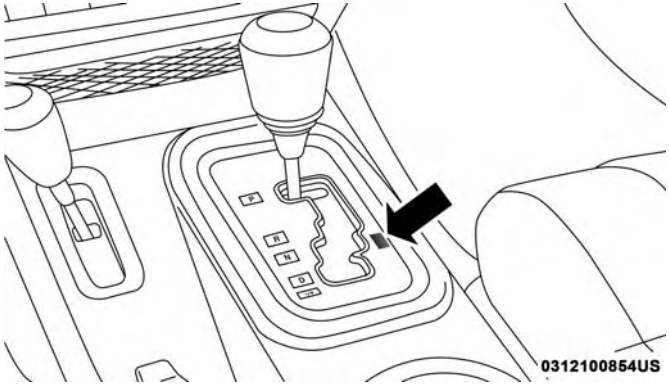

Gear Selector Override Access Cover

5. Press and maintain firm pressure on the brake pedal.
6. Insert the screwdriver or similar tool into the access port, and push and hold the override release lever down.
7. Move the gear selector to the NEUTRAL position.
8. The vehicle may then be started in NEUTRAL.
9. Reinstall the gear selector override access cover.

FREEING A STUCK VEHICLE

If your vehicle becomes stuck in mud, sand or snow, it can often be moved using a rocking motion. Turn the steering wheel right and left to clear the area around the front wheels. Then, shift back and forth between DRIVE and REVERSE (with automatic transmission) or SECOND GEAR and REVERSE (with manual transmission), while gently pressing the accelerator. Use the least amount of accelerator pedal pressure that will maintain the rocking motion, without spinning the wheels or racing the engine.

CAUTION!

Racing the engine or spinning the wheels may lead to transmission overheating and failure. Allow the engine to idle with the transmission in NEUTRAL for at least one minute after every five rocking-motion cycles. This will minimize overheating and reduce the risk of clutch or transmission failure during prolonged efforts to free a stuck vehicle.

NOTE: Push the "ESC Off" switch to place the Electronic Stability Control (ESC) system in "Partial Off" mode before rocking the vehicle. Refer to "Electronic Brake Control System" in "Safety" for further information. Once the vehicle has been freed, push the "ESC Off" switch again to restore "ESC On" mode.

WARNING!

Fast spinning tires can be dangerous. Forces generated by excessive wheel speeds may cause damage, or even failure, of the axle and tires. A tire could explode and injure someone. Do not spin your vehicle's wheels faster than 30 mph (48 km/h) or for longer than 30 seconds continuously without stopping when you are stuck and do not let anyone near a spinning wheel, no matter what the speed.

CAUTION!

- **When "rocking" a stuck vehicle by shifting between DRIVE/SECOND GEAR and REVERSE, do not spin the wheels faster than 15 mph (24 km/h), or drive-train damage may result.**
- **Revving the engine or spinning the wheels too fast may lead to transmission overheating and failure. It can also damage the tires. Do not spin the wheels above 30 mph (48 km/h) while in gear (no transmission shifting occurring).**

TOWING A DISABLED VEHICLE

This section describes procedures for towing a disabled vehicle using a commercial towing service. If the transmission and drivetrain are operable, disabled vehicles may also be towed as described under "Recreational Towing" in the "Starting And Operating" section.

Towing Condition	Wheels OFF The Ground	4WD MODELS
Flat Tow	NONE	**See instructions under "Recreational Towing" in "Starting And Operating".** • Automatic Transmission in **PARK** • Manual Transmission in gear (**NOT** in NEUTRAL) • Transfer Case in **NEUTRAL** • Tow in **forward** direction
Wheel Lift Or Dolly Tow	Front	**NOT ALLOWED**
	Rear	**NOT ALLOWED**
Flatbed	**ALL**	**BEST METHOD**

Proper towing or lifting equipment is required to prevent damage to your vehicle. Use only tow bars and other equipment designed for this purpose, following equipment manufacturer's instructions. Use of safety chains is mandatory. Attach a tow bar or other towing device to main structural members of the vehicle, not to bumpers or associated brackets. State and local laws regarding vehicles under tow must be observed.

If you must use the accessories (wipers, defrosters, etc.) while being towed, the ignition must be in the ON/RUN position, not the ACC position.

If the vehicle's battery is discharged, refer to "Gear Selector Override" in this section for instructions on shifting the automatic transmission out of PARK for towing.

NOTE: For RHD Postal models, refer to the Postal Supplement for towing instructions.

CAUTION!

- **Do not use sling type equipment when towing. Vehicle damage may occur.**
- **When securing the vehicle to a flat bed truck, do not attach to front or rear suspension components. Damage to your vehicle may result from improper towing.**

Without The Ignition Key

Special care must be taken when the vehicle is towed with the ignition in the LOCK position. The only approved method of towing without the ignition key is with a flatbed truck. Proper towing equipment is necessary to prevent damage to the vehicle.

Four–Wheel Drive Models

The manufacturer recommends towing with all wheels **OFF** the ground. Acceptable methods are to tow the vehicle on a flatbed or with one end of the vehicle raised and the opposite end on a towing dolly.

If flatbed equipment is not available and the transfer case is operable, the vehicle may be towed (in the forward direction, with **ALL** wheels on the ground), **IF** the transfer case is in **NEUTRAL** (N) and the transmission is in **PARK** (for automatic transmissions) or in gear (**NOT** in **NEUTRAL**, for manual transmissions). Refer to "Recreational Towing" in "Starting And Operating" for detailed instructions.

CAUTION!

- **Front or rear wheel lifts must not be used (if the remaining wheels are on the ground). Internal damage to the transmission or transfer case will occur if a front or rear wheel lift is used when towing.**
- **Towing this vehicle in violation of the above requirements can cause severe transmission and/or transfer case damage. Damage from improper towing is not covered under the New Vehicle Limited Warranty.**

Emergency Tow Hooks — If Equipped

If your vehicle is equipped with tow hooks, they are mounted in the front and the rear.

NOTE: For off-road recovery, it is recommended to use both of the front tow hooks to minimize the risk of damage to the vehicle. Always use an appropriately rated tow strap.

WARNING!

- **Do not use a chain for freeing a stuck vehicle. Chains may break, causing serious injury or death.**
- **Stand clear of vehicles when pulling with tow hooks. Tow straps may become disengaged, causing serious injury.**

CAUTION!

Tow hooks are for emergency use only, to rescue a vehicle stranded off road. Do not use tow hooks for tow truck hookup or highway towing. You could damage your vehicle. Tow straps are recommended when towing the vehicle, chains may cause vehicle damage.

ENHANCED ACCIDENT RESPONSE SYSTEM (EARS)

This vehicle is equipped with an Enhanced Accident Response System.

Please refer to “Occupant Restraint Systems” in “Safety” for further information on the Enhanced Accident Response System (EARS) function.

EVENT DATA RECORDER (EDR)

This vehicle is equipped with an Event Data Recorder (EDR). The main purpose of an EDR is to record data that will assist in understanding how a vehicle’s systems performed under certain crash or near crash-like situations, such as an air bag deployment or hitting a road obstacle.

Please refer to “Occupant Restraint Systems” in “Safety” for further information on the Event Data Recorder (EDR).

SERVICING AND MAINTENANCE

CONTENTS

■ SCHEDULED SERVICING 361
- □ Maintenance Plan. 362
- □ Heavy Duty Use Of The Vehicle 366

■ ENGINE COMPARTMENT 367
- □ 3.6L Engine 367
- □ Checking Oil Level 368
- □ Adding Washer Fluid 368
- □ Maintenance-Free Battery 368

■ DEALER SERVICE 369
- □ Engine Oil 370
- □ Engine Oil Filter 371
- □ Engine Air Cleaner Filter 371
- □ Accessory Drive Belt Inspection 374
- □ Air Conditioner Maintenance 375
- □ Body Lubrication 379
- □ Windshield Wiper Blades 379
- □ Exhaust System 384
- □ Cooling System 385
- □ Brake System 390
- □ Front/Rear Axle Fluid 391
- □ Transfer Case 392
- □ Automatic Transmission 392
- □ Manual Transmission 395

■ RAISING THE VEHICLE 395

■ TIRES 395
- □ Tire Safety Information 395
- □ Tires — General Information 405
- □ Tire Types 411

- Spare Tires — If Equipped 412
- Wheel And Wheel Trim Care 414
- Tire Chains (Traction Devices) 415
- Tire Rotation Recommendations 416

■ DEPARTMENT OF TRANSPORTATION UNIFORM TIRE QUALITY GRADES 417

- Treadwear 417
- Traction Grades 418
- Temperature Grades 418

■ STORING THE VEHICLE 418

■ BODYWORK 419

- Protection From Atmospheric Agents 419
- Body And Underbody Maintenance 419
- Preserving The Bodywork 420

■ INTERIORS 422

- Seats And Fabric Parts 422
- Plastic And Coated Parts. 423
- Leather Parts 424
- Glass Surfaces 424

SCHEDULED SERVICING

Your vehicle is equipped with an automatic oil change indicator system. The oil change indicator system will remind you that it is time to take your vehicle in for scheduled maintenance.

Based on engine operation conditions, the oil change indicator message will illuminate. This means that service is required for your vehicle. Operating conditions such as frequent short-trips, trailer tow, extremely hot or cold ambient temperatures will influence when the "Change Oil" or "Oil Change Required" message is displayed. Severe Operating Conditions can cause the change oil message to illuminate as early as 3,500 miles (5,600 km) since last reset. Have your vehicle serviced as soon as possible, within the next 500 miles (805 km).

On vehicles equipped with instrument cluster display, "Oil Change Required" will be displayed and a single chime will sound, indicating that an oil change is necessary.

On non-instrument cluster display equipped vehicles, "Change Oil" will flash in the instrument cluster odometer and a single chime will sound, indicating that an oil change is necessary.

Your authorized dealer will reset the oil change indicator message after completing the scheduled oil change. If a scheduled oil change is performed by someone other than your authorized dealer, the message can be reset by referring to the steps described under "Warning And Indicator Lights" or "Instrument Cluster Display" in "Getting To Know Your Instrument Panel" for further information.

NOTE: Under no circumstances should oil change intervals exceed 10,000 miles (16,000 km), twelve months or 350 hours of engine run time, whichever comes first. The 350 hours of engine run or idle time is generally only a concern for fleet customers.

Severe Duty All Models

Change Engine Oil at 4,000 miles (6,500 km) or 350 hours of engine run time if the vehicle is operated in a dusty and off road environment or is operated predominately at idle or only very low engine RPM's. This type of vehicle use is considered Severe Duty.

Once A Month Or Before A Long Trip:

- Check engine oil level
- Check windshield washer fluid level
- Check the tire inflation pressures and look for unusual wear or damage
- Check the fluid levels of the coolant reservoir, brake master cylinder, power steering and automatic transmission, and fill as needed
- Check function of all interior and exterior lights

Maintenance Plan

Required Maintenance Intervals

Refer to the maintenance plan on the following pages for the required maintenance intervals.

At Every Oil Change Interval As Indicated By Oil Change Indicator System:
• Change oil and filter

At Every Oil Change Interval As Indicated By Oil Change Indicator System:
• Rotate the tires **Rotate at the first sign of irregular wear, even if it occurs before the oil indicator system turns on**
• Inspect battery and clean and tighten terminals as required
• Inspect automatic transmission fluid if equipped with dipstick
• Inspect brake pads, shoes, rotors, drums, hoses and park brake
• Inspect engine cooling system protection and hoses
• Inspect exhaust system
• Inspect engine air cleaner if using in dusty or off-road conditions
• Inspect all door latches for presence of grease, reapply if necessary.

Mileage or time passed (whichever comes first)	20,000	30,000	40,000	50,000	60,000	70,000	80,000	90,000	100,000	110,000	120,000	130,000	140,000	150,000
Or Years:	**2**	**3**	**4**	**5**	**6**	**7**	**8**	**9**	**10**	**11**	**12**	**13**	**14**	**15**
Or Kilometers:	32,000	48,000	64,000	80,000	96,000	112,000	128,000	144,000	160,000	176,000	192,000	208,000	224,000	240,000
Additional Inspections														
Inspect the CV/Universal joints.	X		X		X		X		X		X		X	
Inspect front suspension, tie rod ends, and replace if necessary.	X		X		X		X		X		X		X	
Inspect the front and rear axle fluid.	X				X				X				X	
Inspect the brake linings, replace as necessary	X		X		X		X		X		X		X	
Adjust parking brake on vehicles equipped with four wheel disc brakes.	X		X		X		X		X		X		X	
Inspect transfer case fluid.		X						X						X
Additional Maintenance														
Replace engine air cleaner filter.		X			X			X			X			X
Replace air conditioning/cabin air filter.	X		X		X		X		X		X		X	
Replace spark plugs **									X					

Mileage or time passed (whichever comes first)	20,000	30,000	40,000	50,000	60,000	70,000	80,000	90,000	100,000	110,000	120,000	130,000	140,000	150,000
Or Years:	2	3	4	5	6	7	8	9	10	11	12	13	14	15
Or Kilometers:	32,000	48,000	64,000	80,000	96,000	112,000	128,000	144,000	160,000	176,000	192,000	208,000	224,000	240,000
Flush and replace the engine coolant at 10 years or 150,000 miles (240,000 km) whichever comes first.									X					X
Change automatic transmission fluid and filter if using your vehicle for any of the following: police, taxi, fleet, or frequent trailer towing.					X						X			
Change the automatic transmission fluid and filter.											X			
Change the manual transmission fluid if using your vehicle for any of the following: trailer towing, snow plowing, heavy loading, taxi, police, delivery service (commercial service), off-road, desert operation or more than 50% of your driving is at sustained high speeds during hot weather, above 90°F (32°C).		X			X			X			X			X

Mileage or time passed (whichever comes first)	20,000	30,000	40,000	50,000	60,000	70,000	80,000	90,000	100,000	110,000	120,000	130,000	140,000	150,000
Or Years:	2	3	4	5	6	7	8	9	10	11	12	13	14	15
Or Kilometers:	32,000	48,000	64,000	80,000	96,000	112,000	128,000	144,000	160,000	176,000	192,000	208,000	224,000	240,000
Change transfer case fluid if using your vehicle for any of the following: police, taxi, fleet, or frequent trailer towing.					X						X			
Inspect and replace PCV valve if necessary.									X					
Change front and rear axle fluid if using your vehicle for police, taxi, fleet, off-road or frequent trailer towing.			X				X				X			

** The spark plug change interval is mileage based only, yearly intervals do not apply.

WARNING!

- **You can be badly injured working on or around a motor vehicle. Do only service work for which you have the knowledge and the right equipment. If you have any doubt about your ability to perform a service job, take your vehicle to a competent mechanic.**
- **Failure to properly inspect and maintain your vehicle could result in a component malfunction and effect**

(Continued)

WARNING! ***(Continued)***

vehicle handling and performance. This could cause an accident.

Heavy Duty Use Of The Vehicle

Change engine oil at 4,000 miles (6,500 km) or 350 hours of engine run time if the vehicle is operated in a dusty and off road environment or is operated predominately at idle or only very low engine RPM's. This type of vehicle use is considered Severe Duty.

ENGINE COMPARTMENT

3.6L Engine

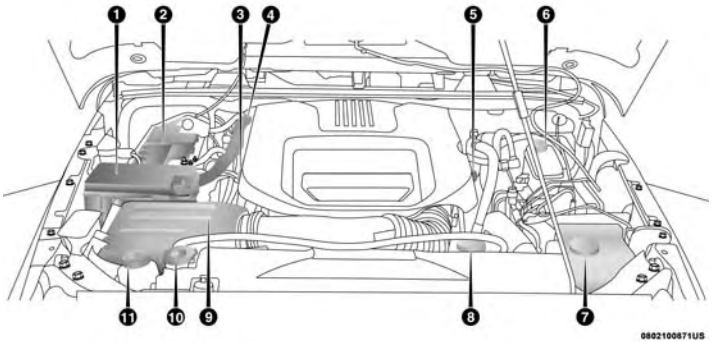

1 — Integrated Power Module (Fuses)
2 — Battery
3 — Engine Oil Dipstick
4 — Automatic Transmission Dipstick (Under Engine Cover)
5 — Engine Oil Fill
6 — Brake Fluid Reservoir
7 — Washer Fluid Reservoir
8 — Engine Coolant Reservoir
9 — Air Cleaner Filter
10 — Coolant Pressure Cap
11 — Power Steering Fluid Reservoir

Checking Oil Level

To ensure proper lubrication of your vehicle's engine, the engine oil must be maintained at the correct level. The engine oil level should be checked five minutes after a warmed up engine has been shut off.

Checking the oil while the vehicle is on level ground will improve the accuracy of the oil level readings. Always maintain the oil level within the SAFE zone on the dipstick. Adding 1 quart (0.95 liters) of oil when the reading is at the bottom of the crosshatch zone will result in a reading at the top of the crosshatch zone on these engines.

CAUTION!

Overfilling or underfilling the crankcase will cause aeration or loss of oil pressure. This could damage your engine.

Adding Washer Fluid

The fluid reservoir for the windshield washers and the rear window washer (if equipped) is shared. The fluid reservoir is located in the engine compartment. Be sure to check the fluid level at regular intervals. Fill the reservoir with windshield washer solvent only (not radiator antifreeze). When refilling the washer fluid reservoir, take some washer fluid and apply it to a cloth or towel and wipe clean the wiper blades; this will help blade performance.

To prevent freeze-up of your windshield washer system in cold weather, select a solution or mixture that meets or exceeds the temperature range of your climate. This rating information can be found on most washer fluid containers.

WARNING!

Commercial windshield washer solvents are flammable. They could ignite and burn you. Care must be exercised when filling or working around the washer solution.

Maintenance-Free Battery

Your vehicle is equipped with a maintenance-free battery. You will never have to add water, nor is periodic maintenance required.

WARNING!

- **Battery fluid is a corrosive acid solution and can burn or even blind you. Do not allow battery fluid to contact your eyes, skin, or clothing. Do not lean over a battery when attaching clamps. If acid splashes in eyes or on skin, flush the area immediately with large amounts of water. Refer to "Jump Starting Procedure" in "In Case Of Emergency" for further information.**
- **Battery gas is flammable and explosive. Keep flame or sparks away from the battery. Do not use a booster battery or any other booster source with an output greater than 12 Volts. Do not allow cable clamps to touch each other.**
- **Battery posts, terminals, and related accessories contain lead and lead compounds. Wash hands after handling.**

CAUTION!

- **It is essential when replacing the cables on the battery that the positive cable is attached to the positive post and the negative cable is attached to the**

(Continued)

CAUTION! ***(Continued)***

negative post. Battery posts are marked positive (+) and negative (-) and are identified on the battery case. Cable clamps should be tight on the terminal posts and free of corrosion.
- **If a "fast charger" is used while the battery is in the vehicle, disconnect both vehicle battery cables before connecting the charger to the battery. Do not use a "fast charger" to provide starting voltage.**

DEALER SERVICE

Your authorized dealer has the qualified service personnel, special tools, and equipment to perform all service operations in an expert manner. Service Manuals are available which include detailed service information for your vehicle. Refer to these Service Manuals before attempting any procedure yourself.

NOTE: Intentional tampering with emissions control systems may void your warranty and could result in civil penalties being assessed against you.

WARNING!

You can be badly injured working on or around a motor vehicle. Only do service work for which you have the knowledge and the proper equipment. If you have any doubt about your ability to perform a service job, take your vehicle to a competent mechanic.

Engine Oil

Change Engine Oil — Gasoline Engine

Refer to "Scheduled Servicing" in this section for the proper maintenance intervals.

NOTE: Under no circumstances should oil change intervals exceed 10,000 miles (16,000 km), 12 months or 350 hours of engine run time, whichever comes first. The 350 hours of engine run or idle time is generally only a concern for fleet customers.

Gasoline Engine Oil Selection

For best performance and maximum protection under all types of operating conditions, the manufacturer only recommends engine oils that are API Certified and meet the requirements of FCA Material Standard MS-6395.

American Petroleum Institute (API) Engine Oil Identification Symbol

This symbol means that the oil has been certified by the American Petroleum Institute (API). The manufacturer only recommends API Certified engine oils.

This symbol certifies 0W-20, 5W-20, 0W-30, 5W-30 and 10W-30 engine oils.

CAUTION!

Do not use chemical flushes in your engine oil as the chemicals can damage your engine. Such damage is not covered by the New Vehicle Limited Warranty.

Engine Oil Viscosity (SAE Grade) — 3.6L Engine

Mopar SAE 5W-20 engine oil approved to FCA Material Standard MS-6395 such as Pennzoil, Shell Helix or equivalent is recommended for all operating temperatures. This engine oil improves low temperature starting and vehicle fuel economy.

The engine oil filler cap also shows the recommended engine oil viscosity for your engine. For information on engine oil filler cap location, refer to the "Engine Compartment" illustration in this section.

NOTE: Mopar SAE 5W-30 engine oil approved to FCA Material Standard MS-6395 such as Pennzoil, Shell Helix or equivalent may be used when SAE 5W-20 engine oil meeting MS-6395 is not available.

Lubricants which do not have both the engine oil certification mark and the correct SAE viscosity grade number should not be used.

Synthetic Engine Oils

You may use synthetic engine oils provided the recommended oil quality requirements are met, and the recommended maintenance intervals for oil and filter changes are followed.

Synthetic engine oils which do not have both the engine oil certification mark and the correct SAE viscosity grade number should not be used.

Materials Added To Engine Oil

The manufacturer strongly recommends against the addition of any additives (other than leak detection dyes) to the engine oil. Engine oil is an engineered product and its performance may be impaired by supplemental additives.

Disposing Of Used Engine Oil And Oil Filters

Care should be taken in disposing of used engine oil and oil filters from your vehicle. Used oil and oil filters, indiscriminately discarded, can present a problem to the environment. Contact an authorized dealer, service station or governmental agency for advice on how and where used oil and oil filters can be safely discarded in your area.

Engine Oil Filter

The engine oil filter should be replaced with a new filter at every engine oil change.

Engine Oil Filter Selection

This manufacturer's engines have a full-flow type disposable oil filter. Use a filter of this type for replacement. The quality of replacement filters varies considerably. Only high quality filters should be used to assure most efficient service. Mopar engine oil filters are high quality oil filters and are recommended.

Engine Air Cleaner Filter

Refer to the "Maintenance Plan" in this section for the proper maintenance intervals.

NOTE: Be sure to follow the "Severe Duty Conditions" maintenance interval if applicable.

WARNING!

The air induction system (air cleaner, hoses, etc.) can provide a measure of protection in the case of engine backfire. Do not remove the air induction system (air cleaner, hoses, etc.) unless such removal is necessary for repair or maintenance. Make sure that no one is near the engine compartment before starting the vehicle with the air induction system (air cleaner, hoses, etc.) removed. Failure to do so can result in serious personal injury.

Engine Air Cleaner Filter Selection

The quality of replacement engine air cleaner filters varies considerably. Only high quality filters should be used to assure most efficient service. Mopar engine air cleaner filters are a high quality filter and are recommended.

Engine Air Cleaner Filter Inspection and Replacement — Gasoline Engine

Follow the recommended maintenance intervals as shown in the Maintenance Schedule.

Engine Air Cleaner Filter Removal

1. Remove the bolts from the air cleaner intake tube.

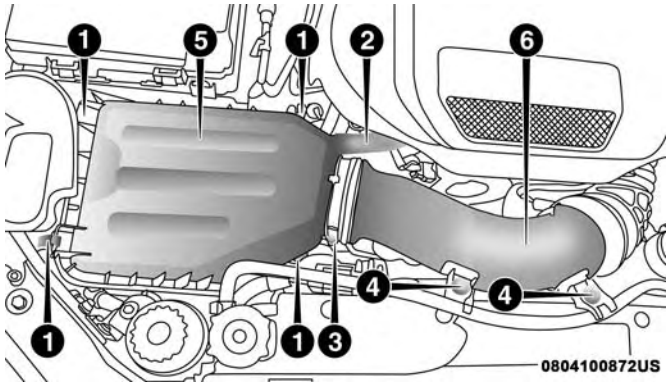

Air Cleaner Filter Cover And Clean Air Intake Tube

1 — Spring Clips
2 — Air Hose
3 — Clean Air Hose Clamp
4 — Clean Air Intake Tube Bolts
5 — Air Cleaner Filter Cover
6 — Clean Air Intake Tube

2. Remove air hose and loosen clean air hose clamp then release the spring clips on the air intake cover.

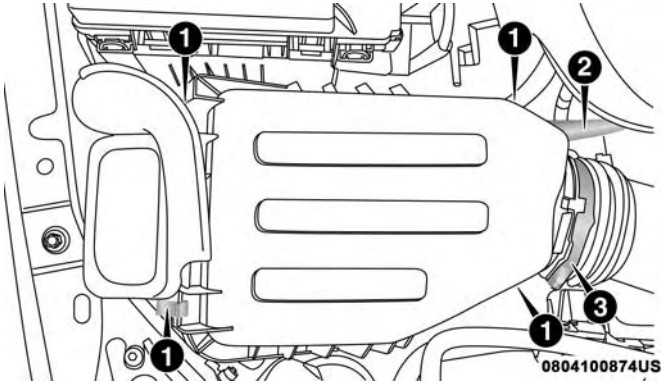

Air Cleaner Filter Cover

1 — Spring Clips
2 — Air Hose
3 — Clean Air Hose Clamp

3. Lift the air cleaner cover to access the air cleaner filter.

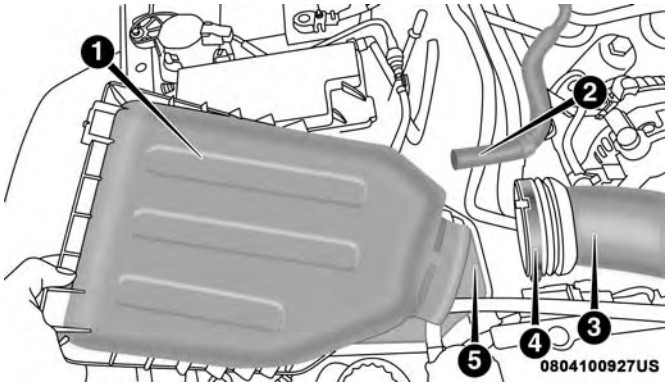

Air Cleaner Air Hose

1 — Air Filter Cleaner Cover
2 — Air Hose
3 — Clean Air Intake Tube
4 — Clean Air Hose Clamp
5 — Air Cleaner Filter

4. Remove the air cleaner filter element from the housing assembly.

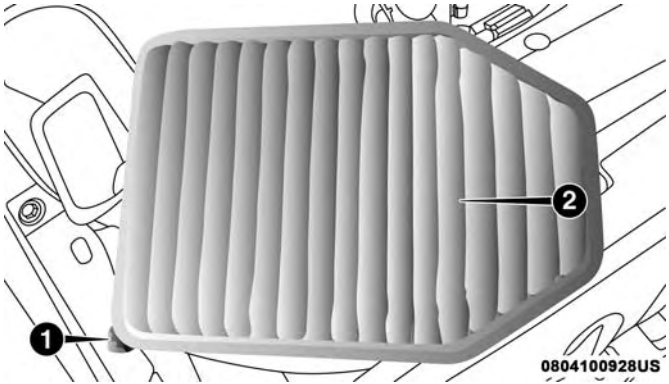

Air Cleaner Filter

1 — Air Cleaner Filter
2 — Air Cleaner Filter Inspection Surface

Engine Air Cleaner Filter Installation

NOTE: Inspect and clean the housing if dirt or debris is present before replacing the air filter element.

1. Install the air cleaner filter element into the housing assembly with the air cleaner filter inspection surface facing downward.
2. Install the air cleaner cover onto the housing assembly locating tabs.
3. Latch the spring clips and lock the air cleaner cover to the housing assembly and install air hose.
4. Tighten air intake clamp and tighten air cleaner intake tube bolts.

Accessory Drive Belt Inspection

WARNING!

- **Do not attempt to inspect an accessory drive belt with vehicle running.**
- **When working near the radiator cooling fan, disconnect the fan motor lead. The fan is temperature controlled and can start at any time regardless of ignition mode. You could be injured by the moving fan blades.**
- **You can be badly injured working on or around a motor vehicle. Only do service work for which you have the knowledge and the proper equipment. If you have any doubt about your ability to perform a service job, take your vehicle to a competent mechanic.**

When inspecting accessory drive belts, small cracks that run across ribbed surface of belt from rib to rib, are considered normal. These are not a reason to replace belt. However, cracks running along a rib (not across) are not normal. Any belt with cracks running along a rib must be replaced. Also have the belt replaced if it has excessive wear, frayed cords or severe glazing.

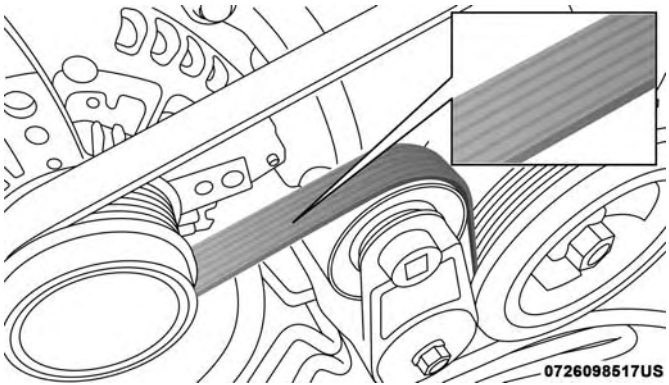

Accessory Belt (Serpentine Belt)

Conditions that would require replacement:

- Rib chunking (one or more ribs has separated from belt body)
- Rib or belt wear
- Longitudinal belt cracking (cracks between two ribs)
- Belt slips
- "Groove jumping" (belt does not maintain correct position on pulley)
- Belt broken (note: identify and correct problem before new belt is installed)
- Noise (objectionable squeal, squeak, or rumble is heard or felt while drive belt is in operation)

Some conditions can be caused by a faulty component such as a belt pulley. Belt pulleys should be carefully inspected for damage and proper alignment.

Belt replacement on some models requires the use of special tools, we recommend having your vehicle serviced at an authorized dealer.

Air Conditioner Maintenance

For best possible performance, your air conditioner should be checked and serviced by an authorized dealer at the start of each warm season. This service should include cleaning of the condenser fins and a performance test. Drive belt tension should also be checked at this time.

WARNING!

- **Use only refrigerants and compressor lubricants approved by the manufacturer for your air conditioning system. Some unapproved refrigerants are flammable and can explode, injuring you. Other unapproved refrigerants or lubricants can cause the system to fail, requiring costly repairs. Refer to Warranty Information Book, located in your owner's information kit, for further warranty information.**
- **The air conditioning system contains refrigerant under high pressure. To avoid risk of personal injury or damage to the system, adding refrigerant or any repair requiring lines to be disconnected should be done by an experienced technician.**

CAUTION!

Do not use chemical flushes in your air conditioning system as the chemicals can damage your air conditioning components. Such damage is not covered by the New Vehicle Limited Warranty.

Refrigerant Recovery And Recycling R134a — If Equipped

R-134a Air Conditioning Refrigerant is a hydrofluorocarbon (HFC) that is an ozone-friendly substance. The manufacturer recommends that air conditioning service be performed by an authorized dealer or other service facilities using recovery and recycling equipment.

NOTE: Use only manufacturer approved A/C system PAG compressor oil and refrigerants.

Refrigerant Recovery And Recycling — R–1234yf

R–1234yf Air Conditioning Refrigerant is a hydrofluoroolefin (HFO) that is endorsed by the Environmental Protection Agency and is an ozone-friendly substance with a low global-warming potential. The manufacturer recommends that air conditioning service be performed by an authorized dealer using recovery and recycling equipment.

NOTE: Use only manufacturer approved A/C system PAG compressor oil, and refrigerants.

Air Conditioning Filter Replacement (A/C Air Filter)

WARNING!

Do not remove the cabin air filter while the vehicle is running, or while the ignition is in the ACC or ON/RUN mode. With the cabin air filter removed and the blower operating, the blower can contact hands and may propel dirt and debris into your eyes, resulting in personal injury.

The A/C air filter is located in the fresh air inlet behind the glove compartment. Perform the following procedure to replace the filter:

1. Open the glove compartment and remove all contents.
2. Push in on the sides of the glove compartment and lower the door.

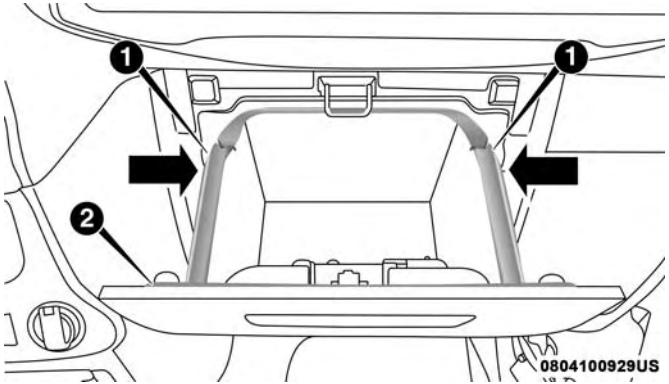

Glove Compartment

1 — Glove Compartment Travel Stops
2 — Glove Compartment

3. Pivot the glove compartment downward.
4. Disengage the two retaining tabs that secure the two air filter access doors to the HVAC housing.

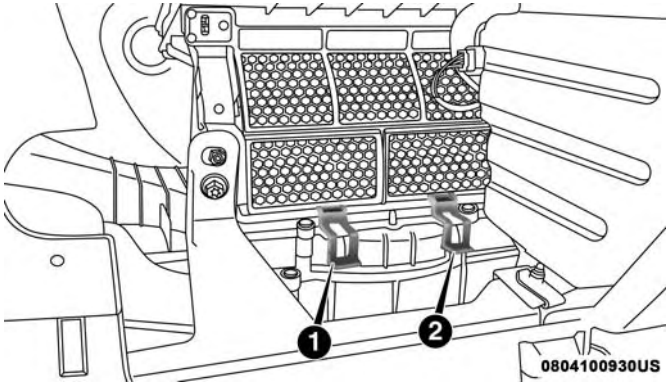

Air Filter Retaining Tabs

1 — Left Retaining Tab
2 — Right Retaining Tab

5. Open the two air filter access doors.
6. Remove the two particulate air filters from the HVAC air inlet housing. Pull the filter elements straight out of the housing, one at a time.

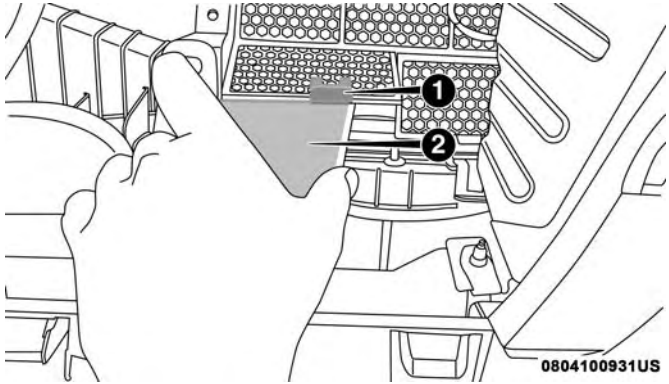

Air Filter Access Door Open

1 — Air Conditioning Filter Access Door
2 — Air Conditioning Air Filter

7. Install the A/C air filter with the air filter position indicators pointing in the same direction as removal.

CAUTION!

The cabin air filter is identified with an arrow to indicate airflow direction through the filter. Failure to properly install the filter will result in the need to replace it more often.

8. Close A/C Air Filter access doors and secure retaining tabs.
9. Rotate the glove compartment door back into position.

Refer to the "Maintenance Plan" for the proper maintenance intervals.

Body Lubrication

Locks and all body pivot points, including such items as seat tracks, door hinge pivot points and rollers, liftgate, tailgate, decklid, sliding doors and hood hinges, should be lubricated periodically with a lithium based grease, such as Mopar Spray White Lube to assure quiet, easy operation and to protect against rust and wear. Prior to the application of any lubricant, the parts concerned should be wiped clean to remove dust and grit; after lubricating excess oil and grease should be removed. Particular attention should also be given to hood latching components to ensure proper function. When performing other underhood services, the hood latch, release mechanism and safety catch should be cleaned and lubricated.

The external lock cylinders should be lubricated twice a year, preferably in the Fall and Spring. Apply a small amount of a high quality lubricant, such as Mopar Lock Cylinder Lubricant directly into the lock cylinder.

Windshield Wiper Blades

Clean the rubber edges of the wiper blades and the windshield periodically with a sponge or soft cloth and a mild nonabrasive cleaner. This will remove accumulations of salt or road film.

Operation of the wipers on dry glass for long periods may cause deterioration of the wiper blades. Always use washer fluid when using the wipers to remove salt or dirt from a dry windshield.

Avoid using the wiper blades to remove frost or ice from the windshield. Keep the blade rubber out of contact with petroleum products such as engine oil, gasoline, etc.

NOTE: Life expectancy of wiper blades varies depending on geographical area and frequency of use. Poor performance of blades may be present with chattering, marks, water lines or wet spots. If any of these conditions are present, clean the wiper blades or replace as necessary.

The wiper blades and wiper arms should be inspected periodically, not just when wiper performance problems are experienced. This inspection should include the following points:

- Wear Or Uneven Edges
- Foreign Material
- Hardening Or Cracking
- Deformation Or Fatigue

If a wiper blade or wiper arm is damaged, replace the affected wiper arm or blade with a new unit. Do not attempt to repair a wiper arm or blade that is damaged.

Wiper Blade Removal/Installation

CAUTION!

Do not allow the wiper arm to spring back against the glass without the wiper blade in place or the glass may be damaged.

1. Lift the wiper arm to raise the wiper blade off of the glass, until the wiper arm is in the full up position.

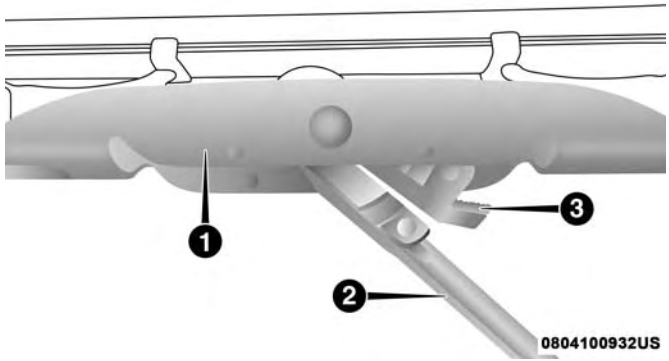

Wiper Blade With Release Tab In Locked Position

1 — Wiper Blade
2 — Wiper Arm
3 — Release Tab

2. To disengage the wiper blade from the wiper arm, press the release tab on the wiper blade and while holding the wiper arm with one hand, slide the wiper blade down towards the base of the wiper arm.

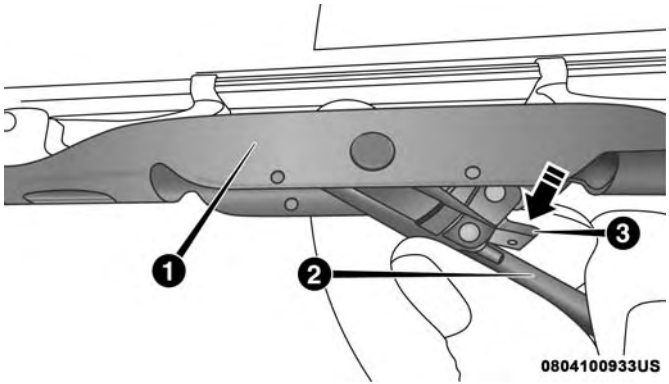

Wiper Blade With Release Tab In Unlocked Position

1 — Wiper Blade
2 — Wiper Arm
3 — Release Tab

3. With the wiper blade disengaged, remove the wiper blade from the wiper arm.

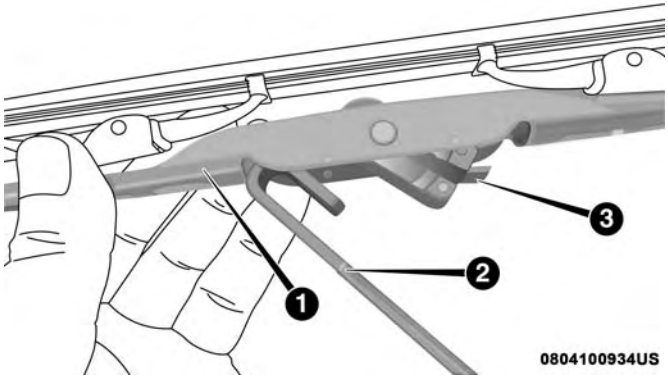

Wiper Blade Removed From Wiper Arm

1 — Wiper Blade
2 — Wiper Arm
3 — Release Tab

4. Gently lower the wiper arm onto the glass.

Installing The Front Wipers

1. Lift the wiper arm off of the glass, until the wiper arm is in the full up position.
2. Position the wiper blade near the hook on the tip of the wiper arm.
3. Insert the hook on the tip of the arm through the opening in the wiper blade.
4. Slide the wiper blade up into the hook on the wiper arm, latch engagement will be accompanied by an audible click.
5. Gently lower the wiper blade onto the glass.

Rear Wiper Blade Removal/Installation

1. Remove the rear wiper arm pivot cap To access the wiper arm nut.

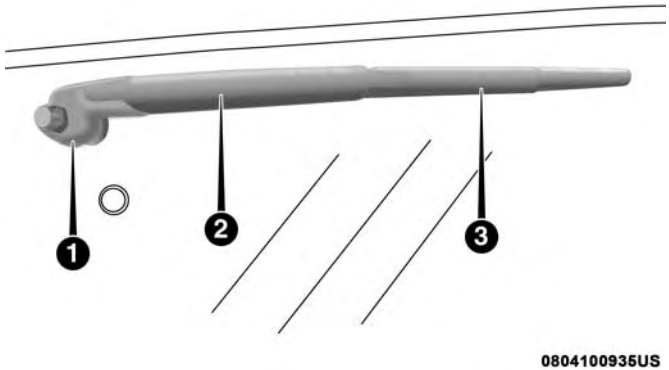

Rear Wiper Assembly

1 — Wiper Arm Pivot Cap
2 — Wiper Arm
3 — Wiper Blade

2. To remove the wiper blade from the wiper arm, grasp the wiper blade nearest to wiper arm with your right hand. With your left hand hold the wiper arm as you pull the wiper blade away from the wiper arm past its stop far enough to unsnap the wiper blade pivot pin from the receptacle on the end of the wiper arm.

NOTE: Resistance will be accompanied by an audible snap.

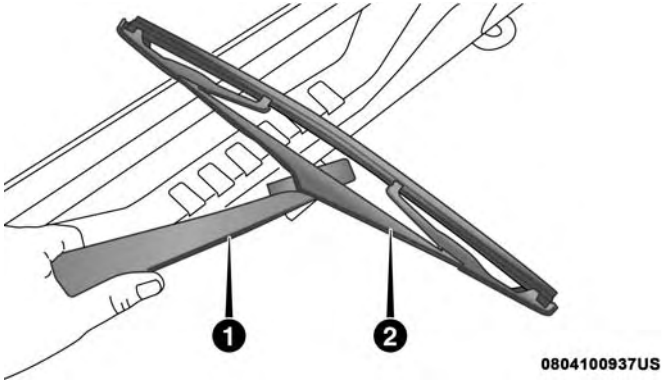

Wiper Blade Removed From Wiper Arm

1 — Wiper Arm
2 — Wiper Blade

3. Still grasping the wiper blade, move the wiper blade away from the wiper arm to disengage.

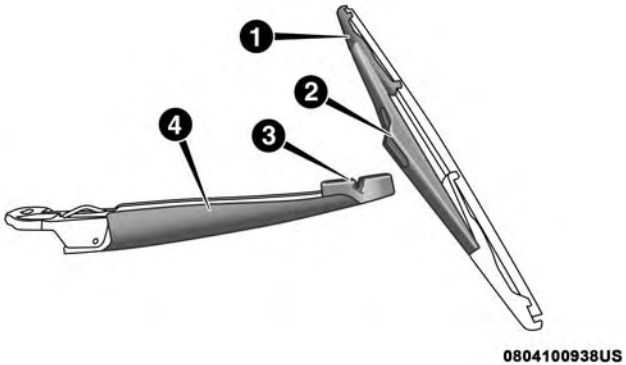

Wiper Blade Removed From Wiper Arm

1 — Wiper Blade
2 — Wiper Blade Pivot Pin
3 — Wiper Arm Receptacle
4 — Wiper Arm

Installing The Rear Wiper

1. Insert the wiper blade pivot pin into the opening on the end of the wiper arm. Grab the bottom end of the wiper arm with one hand, and apply pressure to the wiper blade flush with the wiper arm until it snaps into place.
2. Lower the wiper blade onto the glass and snap the wiper arm pivot cap back into place.

Exhaust System

The best protection against carbon monoxide entry into the vehicle body is a properly maintained engine exhaust system.

If you notice a change in the sound of the exhaust system; or if the exhaust fumes can be detected inside the vehicle; or when the underside or rear of the vehicle is damaged; have an authorized technician inspect the complete exhaust system and adjacent body areas for broken, damaged, deteriorated, or mispositioned parts. Open seams or loose connections could permit exhaust fumes to seep into the passenger compartment. In addition, have the exhaust system inspected each time the vehicle is raised for lubrication or oil change. Replace as required.

WARNING!

- **Exhaust gases can injure or kill. They contain carbon monoxide (CO), which is colorless and odorless. Breathing it can make you unconscious and can eventually poison you. To avoid breathing CO, refer to "Safety Tips" in "Safety" for further information.**
- **A hot exhaust system can start a fire if you park over materials that can burn. Such materials might be grass or leaves coming into contact with your exhaust system. Do not park or operate your vehicle in areas where your exhaust system can contact anything that can burn.**

CAUTION!

- **The catalytic converter requires the use of unleaded fuel only. Leaded gasoline will destroy the effectiveness of the catalyst as an emissions control device and may seriously reduce engine performance and cause serious damage to the engine.**
- **Damage to the catalytic converter can result if your vehicle is not kept in proper operating condition. In**

(Continued)

CAUTION! *(Continued)*

the event of engine malfunction, particularly involving engine misfire or other apparent loss of performance, have your vehicle serviced promptly. Continued operation of your vehicle with a severe malfunction could cause the converter to overheat, resulting in possible damage to the converter and vehicle.

Under normal operating conditions, the catalytic converter will not require maintenance. However, it is important to keep the engine properly tuned to assure proper catalyst operation and prevent possible catalyst damage.

NOTE: Intentional tampering with emissions control systems can result in civil penalties being assessed against you.

In unusual situations involving grossly malfunctioning engine operation, a scorching odor may suggest severe and abnormal catalyst overheating. If this occurs, stop the vehicle, turn off the engine and allow it to cool. Service, including a tune-up to manufacturer's specifications, should be obtained immediately.

To minimize the possibility of catalytic converter damage:

- Do not interrupt the ignition when the transmission is in gear and the vehicle is in motion.
- Do not try to start the vehicle by pushing or towing the vehicle.
- Do not idle the engine with any ignition components disconnected or removed, such as when diagnostic testing, or for prolonged periods during very rough idle or malfunctioning operating conditions.

Cooling System

WARNING!

- **Turn vehicle off and disconnect the fan motor lead before working near the radiator cooling fan.**
- **You or others can be badly burned by hot engine coolant (antifreeze) or steam from your radiator. If you see or hear steam coming from under the hood, do not open the hood until the radiator has had time to cool. Never open a cooling system pressure cap when the radiator or coolant bottle is hot.**

(Continued)

WARNING! ***(Continued)***

- **Keep hands, tools, clothing, and jewelry away from the radiator cooling fan when the hood is raised. The fan starts automatically and may start at any time, whether the engine is running or not.**
- **When working near the radiator cooling fan, disconnect the fan motor lead or turn the ignition to the OFF mode. The fan is temperature controlled and can start at any time the ignition is in the ON mode.**
- **You or others can be badly burned by hot engine coolant (antifreeze) or steam from your radiator. If you see or hear steam coming from under the hood, do not open the hood until the radiator has had time to cool. Never try to open a cooling system pressure cap when the radiator is hot.**

Engine Coolant Checks

Check the engine coolant (antifreeze) protection every 12 months (before the onset of freezing weather, where applicable). If the engine coolant (antifreeze) is dirty or rusty in appearance, the system should be drained, flushed and refilled with fresh engine coolant (antifreeze). Check the front of the A/C condenser (if equipped) or radiator for any accumulation of bugs, leaves, etc. If dirty, clean by gently spraying water from a garden hose vertically down the face of the A/C condenser (if equipped) or the back of the radiator core.

Check the engine cooling system hoses for brittle rubber, cracking, tears, cuts, and tightness of the connection at the coolant recovery bottle and radiator. Inspect the entire system for leaks. DO NOT REMOVE THE COOLANT PRESSURE CAP WHEN THE COOLING SYSTEM IS HOT.

Cooling System — Drain, Flush And Refill

NOTE: Some vehicles require special tools to add coolant properly. Failure to fill these systems properly could lead to severe internal engine damage. If any coolant is needed to be added to the system please contact your local authorized dealer.

If the engine coolant (antifreeze) is dirty or contains visible sediment, have an authorized dealer clean and flush with OAT coolant (antifreeze) (conforming to MS.90032).

Refer to the “Maintenance Plan” in this section for the proper maintenance intervals.

Selection Of Coolant

Refer to "Fluids And Lubricants" in "Technical Specifications" for further information.

CAUTION!

- **Mixing of engine coolant (antifreeze) other than specified Organic Additive Technology (OAT) engine coolant (antifreeze), may result in engine damage and may decrease corrosion protection. Organic Additive Technology (OAT) engine coolant is different and should not be mixed with Hybrid Organic Additive Technology (HOAT) engine coolant (antifreeze) or any "globally compatible" coolant (antifreeze). If a non-OAT engine coolant (antifreeze) is introduced into the cooling system in an emergency, the cooling system will need to be drained, flushed, and refilled with fresh OAT coolant (conforming to MS.90032), by an authorized dealer as soon as possible.**
- **Do not use water alone or alcohol-based engine coolant (antifreeze) products. Do not use additional rust inhibitors or antirust products, as they may not be compatible with the radiator engine coolant and may plug the radiator.**

(Continued)

CAUTION! *(Continued)*

- **This vehicle has not been designed for use with propylene glycol-based engine coolant (antifreeze). Use of propylene glycol-based engine coolant (antifreeze) is not recommended.**

Adding Coolant

Your vehicle has been built with an improved engine coolant (OAT coolant conforming to MS.90032) that allows extended maintenance intervals. This engine coolant (antifreeze) can be used up to ten years or 150,000 miles (240,000 km) before replacement. To prevent reducing this extended maintenance period, it is important that you use the same engine coolant (OAT coolant conforming to MS.90032) throughout the life of your vehicle.

Please review these recommendations for using Organic Additive Technology (OAT) engine coolant (antifreeze) that meets the requirements of FCA Material Standard MS.90032. When adding engine coolant (antifreeze):

- We recommend using Mopar Antifreeze/Coolant 10 Year/150,000 Mile (240,000 km) Formula OAT (Organic Additive Technology) that meets the requirements of FCA Material Standard MS.90032.

- Mix a minimum solution of 50% OAT engine coolant that meets the requirements of FCA Material Standard MS.90032 and distilled water. Use higher concentrations (not to exceed 70%) if temperatures below –34°F (–37°C) are anticipated. Please contact an authorized dealer for assistance.
- Use only high purity water such as distilled or deionized water when mixing the water/engine coolant (antifreeze) solution. The use of lower quality water will reduce the amount of corrosion protection in the engine cooling system.

NOTE:

- It is the owner's responsibility to maintain the proper level of protection against freezing according to the temperatures occurring in the area where the vehicle is operated.
- Some vehicles require special tools to add coolant properly. Failure to fill these systems properly could lead to severe internal engine damage. If any coolant is needed to be added to the system, please contact a local authorized dealer.
- Mixing engine coolant (antifreeze) types is not recommended and can result in cooling system damage. If HOAT and OAT coolant are mixed in an emergency, have a authorized dealer drain, flush, and refill with OAT coolant (conforming to MS.90032) as soon as possible.

Cooling System Pressure Cap

The cap must be fully tightened to prevent loss of engine coolant (antifreeze), and to ensure that engine coolant (antifreeze) will return to the radiator from the coolant expansion bottle/recovery tank if so equipped.

The cap should be inspected and cleaned if there is any accumulation of foreign material on the sealing surfaces.

WARNING!

- **Do not open hot engine cooling system. Never add engine coolant (antifreeze) when the engine is overheated. Do not loosen or remove the cap to cool an overheated engine. Heat causes pressure to build up in the cooling system. To prevent scalding or injury, do not remove the pressure cap while the system is hot or under pressure.**
- **Do not use a pressure cap other than the one specified for your vehicle. Personal injury or engine damage may result.**

Disposal Of Used Coolant

Used ethylene glycol-based coolant (antifreeze) is a regulated substance requiring proper disposal. Check with your local authorities to determine the disposal rules for your community. To prevent ingestion by animals or children, do not store ethylene glycol-based coolant in open containers or allow it to remain in puddles on the ground. If ingested by a child or pet, seek emergency assistance immediately. Clean up any ground spills immediately.

Coolant Level

The coolant bottle provides a quick visual method for determining that the coolant level is adequate. With the engine OFF and cold, the level of the engine coolant (antifreeze) in the bottle should be between the ranges indicated on the bottle.

The radiator normally remains completely full, so there is no need to remove the radiator/coolant pressure cap unless checking for engine coolant (antifreeze) freeze point or replacing coolant. Advise your service attendant of this. As long as the engine operating temperature is satisfactory, the coolant bottle need only be checked once a month.

When additional engine coolant (antifreeze) is needed to maintain the proper level, only OAT coolant that meets the requirements of FCA Material Standard MS.90032 should be added to the coolant bottle. Do not overfill.

Points To Remember

NOTE: When the vehicle is stopped after a few miles/kilometers of operation, you may observe vapor coming from the front of the engine compartment. This is normally a result of moisture from rain, snow, or high humidity accumulating on the radiator and being vaporized when the thermostat opens, allowing hot engine coolant (antifreeze) to enter the radiator.

If an examination of your engine compartment shows no evidence of radiator or hose leaks, the vehicle may be safely driven. The vapor will soon dissipate.

- Do not overfill the coolant expansion bottle.
- Check the coolant freeze point in the radiator and in the coolant expansion bottle. If engine coolant (antifreeze) needs to be added, the contents of the coolant expansion bottle must also be protected against freezing.
- If frequent engine coolant (antifreeze) additions are required, the cooling system should be pressure tested for leaks.

- Maintain engine coolant (antifreeze) concentration at a minimum of 50% OAT coolant (conforming to MS.90032) and distilled water for proper corrosion protection of your engine which contains aluminum components.
- Make sure that the coolant expansion bottle overflow hoses are not kinked or obstructed.
- Keep the front of the radiator clean. If your vehicle is equipped with air conditioning, keep the front of the condenser clean.
- Do not change the thermostat for Summer or Winter operation. If replacement is ever necessary, install ONLY the correct type thermostat. Other designs may result in unsatisfactory engine coolant (antifreeze) performance, poor gas mileage, and increased emissions.

Brake System

In order to assure brake system performance, all brake system components should be inspected periodically. Refer to the "Maintenance Plan" in this section for the proper maintenance intervals.

WARNING!

Riding the brakes can lead to brake failure and possibly a collision. Driving with your foot resting or riding on the brake pedal can result in abnormally high brake temperatures, excessive lining wear, and possible brake damage. You would not have your full braking capacity in an emergency.

Fluid Level Check — Brake Master Cylinder

The fluid level of the master cylinder should be checked whenever the vehicle is serviced, or immediately if the brake system warning light is on. If necessary, add fluid to bring level within the designated marks on the side of the reservoir of the brake master cylinder. Be sure to clean the top of the master cylinder area before removing cap. With disc brakes, fluid level can be expected to fall as the brake pads wear. Brake fluid level should be checked when pads are replaced. If the brake fluid is abnormally low, check the system for leaks.

Refer to "Fluids And Lubricants" in "Technical Specifications" for further information.

WARNING!

- **Use only manufacturer's recommended brake fluid. Refer to "Fluids And Lubricants" in "Technical Specifications" for further information. Using the wrong type of brake fluid can severely damage your brake system and/or impair its performance. The proper type of brake fluid for your vehicle is also identified on the original factory installed hydraulic master cylinder reservoir.**
- **To avoid contamination from foreign matter or moisture, use only new brake fluid or fluid that has been in a tightly closed container. Keep the master cylinder reservoir cap secured at all times. Brake fluid in a open container absorbs moisture from the air resulting in a lower boiling point. This may cause it to boil unexpectedly during hard or prolonged braking, resulting in sudden brake failure. This could result in a collision.**
- **Overfilling the brake fluid reservoir can result in spilling brake fluid on hot engine parts, causing the brake fluid to catch fire. Brake fluid can also damage painted and vinyl surfaces, care should be taken to avoid its contact with these surfaces.**

(Continued)

WARNING! *(Continued)*

- **Do not allow petroleum based fluid to contaminate the brake fluid. Brake seal components could be damaged, causing partial or complete brake failure. This could result in a collision.**

Front/Rear Axle Fluid

For normal service, periodic fluid level checks are not required. When the vehicle is serviced for other reasons the exterior surfaces of the axle assembly should be inspected. If gear oil leakage is suspected inspect the fluid level. Refer to "Fluids And Lubricants" in "Technical Specifications" for further information.

Fluid Level Check

Lubricant should be at the bottom edge of the oil fill hole.

Adding Fluid

Add lubricant only at the fill hole and only to the level specified above.

Selection Of Lubricant

Use only the manufacturer's recommended fluid. Refer to "Fluids And Lubricants" in "Technical Specifications" for further information.

Transfer Case

Fluid Level Check

The fluid level should be to the bottom edge of the fill hole (A) when the vehicle is in a level position.

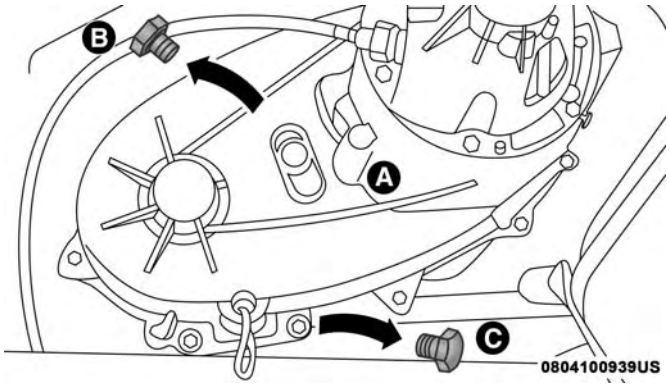

Transfer Case

Adding Fluid

Add fluid at the filler hole, until it runs out of the hole, when the vehicle is in a level position.

Drain

First remove the fill plug (B), then the drain plug (C). The recommended tightening torque for the drain and fill plugs is 15 to 25 ft lbs (20 to 34 N·m).

CAUTION!

When replacing the plugs, do not overtighten them. You could damage them and cause them to leak.

Selection Of Lubricant

Use only the manufacturer's recommended fluid. Refer to "Fluids And Lubricants" in "Technical Specifications" for further information.

Automatic Transmission

Selection Of Lubricant

It is important to use the proper transmission fluid to ensure optimum transmission performance and life. Use only the manufacturer's specified transmission fluid. Refer to "Fluids And Lubricants" in "Technical Specifications" for fluid specifications. It is important to maintain the transmission fluid at the correct level using the recommended fluid.

NOTE: No chemical flushes should be used in any transmission; only the approved lubricant should be used.

CAUTION!

Using a transmission fluid other than the manufacturer's recommended fluid may cause deterioration in transmission shift quality and/or torque converter shudder, and will require more frequent fluid and filter changes. Refer to "Fluids And Lubricants" in "Technical Specifications" for fluid specifications.

Special Additives

The manufacturer strongly recommends against using any special additives in the transmission. Automatic Transmission Fluid (ATF) is an engineered product and its performance may be impaired by supplemental additives. Therefore, do not add any fluid additives to the transmission. The only exception to this policy is the use of special dyes for diagnosing fluid leaks. Avoid using transmission sealers as they may adversely affect seals.

CAUTION!

Do not use chemical flushes in your transmission as the chemicals can damage your transmission components. Such damage is not covered by the New Vehicle Limited Warranty.

Fluid Level Check

It is best to check the fluid level when the transmission is at normal operating temperature (approximately 180°F/82°C). This occurs after at least 15 miles (25 km) of driving. At normal operating temperature, the fluid cannot be held comfortably between the fingertips.

Use the following procedure to check the transmission fluid level properly:

1. Park the vehicle on level ground.
2. Remove the engine cover by pulling it up off the mounting studs (two in the front and two in the rear).
3. Run the engine at normal idle speed for at least 60 seconds, and leave the engine running for the rest of this procedure.
4. Fully apply the parking brake, and press the brake pedal.

5. Place the gear selector momentarily into each gear position (allowing time for the transmission to fully engage in each position), ending with the transmission in PARK.

6. Remove the dipstick, wipe it clean and reinsert it until seated.

7. Remove the dipstick again and note the fluid level on both sides. The fluid level reading is only valid if there is a solid coating of oil on both sides of the dipstick. Note that the holes in the dipstick will be full of fluid if the actual level is at or above the hole. The fluid level should be between the HOT (upper) reference holes on the dipstick at normal operating temperature. If the fluid level is low, add fluid through the dipstick tube to bring it to the proper level. **Do not overfill.** Use ONLY the specified fluid (refer to "Fluids And Lubricants" under "Technical Specifications" for fluid specifications). After adding any quantity of oil through the dipstick tube, wait a minimum of two minutes for the oil to fully drain into the transmission before rechecking the fluid level.

NOTE:

- The holes in the dipstick will be full of fluid if the actual level is at or above the hole.
- If it is necessary to check the transmission below the operating temperature, the fluid level should be between the two COLD (lower) holes on the dipstick with the fluid at approximately 80°F (27°C). If the fluid level is correctly established at 80° F (27°C), it should be between the HOT (upper) reference holes when the transmission reaches 180° F (82°C). Remember it is best to check the level at the normal operating temperature.

CAUTION!

If the fluid temperature is below 50°F (10°C) it may not register on the dipstick. Do not add fluid until the temperature is elevated enough to produce an accurate reading. Run the engine at idle, in PARK, to warm the fluid.

8. Reinstall the engine cover and snap it down securely onto the four mounting studs.

9. Check for leaks. Release the parking brake.

NOTE: To prevent dirt and water from entering the transmission after checking or replenishing fluid, make sure that the dipstick cap is properly reseated. It is normal for the dipstick cap to spring back slightly from its fully seated position, as long as its seal remains engaged in the dipstick tube.

Fluid And Filter Changes

Refer to the "Maintenance Plan" for the proper maintenance intervals.

In addition, change the fluid and filter if the fluid becomes contaminated (with water, etc.), or if the transmission is disassembled for any reason.

Manual Transmission

Selection Of Lubricant

Use only manufacturer's recommended manual transmission fluid. Refer to "Fluids And Lubricants" in "Technical Specifications" for further information.

Fluid Level Check

Check the fluid level by removing the fill plug. The fluid level should be between the bottom of the fill hole and a point not more than 3/16 of an inch (4.76 mm) below the bottom of the hole.

Add fluid, if necessary, to maintain the proper level.

Frequency Of Fluid Change

Under normal operating conditions, the fluid installed at the factory will give satisfactory lubrication for the life of the vehicle. If the fluid becomes contaminated with water, it should be changed immediately. Otherwise, change the fluid as recommended in the Maintenance Plan. Refer to the "Maintenance Plan" for the proper maintenance intervals.

RAISING THE VEHICLE

In the case where it is necessary to raise the vehicle, go to an authorized dealer or service station.

TIRES

Tire Safety Information

Tire safety information will cover aspects of the following information: Tire Markings, Tire Identification Numbers, Tire Terminology and Definitions, Tire Pressures, and Tire Loading.

Tire Markings

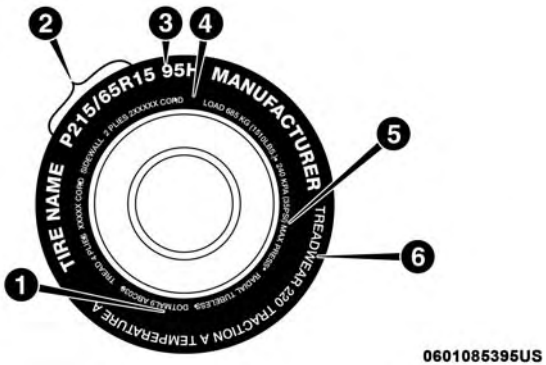

Tire Markings

1 — U.S. DOT Safety Standards Code (TIN)	4 — Maximum Load
2 — Size Designation	5 — Maximum Pressure
3 — Service Description	6 — Treadwear, Traction and Temperature Grades

NOTE:

- P (Passenger) — Metric tire sizing is based on U.S. design standards. P-Metric tires have the letter "P" molded into the sidewall preceding the size designation. Example: P215/65R15 95H.
- European — Metric tire sizing is based on European design standards. Tires designed to this standard have the tire size molded into the sidewall beginning with the section width. The letter "P" is absent from this tire size designation. Example: 215/65R15 96H.
- LT (Light Truck) — Metric tire sizing is based on U.S. design standards. The size designation for LT-Metric tires is the same as for P-Metric tires except for the letters "LT" that are molded into the sidewall preceding the size designation. Example: LT235/85R16.
- Temporary spare tires are designed for temporary emergency use only. Temporary high pressure compact spare tires have the letter "T" or "S" molded into the sidewall preceding the size designation. Example: T145/80D18 103M.
- High flotation tire sizing is based on U.S. design standards and it begins with the tire diameter molded into the sidewall. Example: 31x10.5 R15 LT.

Tire Sizing Chart

EXAMPLE:

Example Size Designation: P215/65R15XL 95H, 215/65R15 96H, LT235/85R16C, T145/80D18 103M, 31x10.5 R15 LT
P = Passenger car tire size based on U.S. design standards, or **"....blank...."** = Passenger car tire based on European design standards, or **LT** = Light truck tire based on U.S. design standards, or **T or S** = Temporary spare tire or **31** = Overall diameter in inches (in)
215, 235, 145 = Section width in millimeters (mm)
65, 85, 80 = Aspect ratio in percent (%) – Ratio of section height to section width of tire, or **10.5** = Section width in inches (in)
R = Construction code – "R" means radial construction, or – "D" means diagonal or bias construction
15, 16, 18 = Rim diameter in inches (in)
Service Description:
95 = Load Index – A numerical code associated with the maximum load a tire can carry

EXAMPLE:
H = Speed Symbol – A symbol indicating the range of speeds at which a tire can carry a load corresponding to its load index under certain operating conditions – The maximum speed corresponding to the speed symbol should only be achieved under specified operating conditions (i.e., tire pressure, vehicle loading, road conditions, and posted speed limits)
Load Identification: Absence of the following load identification symbols on the sidewall of the tire indicates a Standard Load (SL) tire: • **XL** = Extra load (or reinforced) tire, or • **LL** = Light load tire or • **C, D, E, F, G** = Load range associated with the maximum load a tire can carry at a specified pressure
Maximum Load – Maximum load indicates the maximum load this tire is designed to carry
Maximum Pressure – Maximum pressure indicates the maximum permissible cold tire inflation pressure for this tire

Tire Identification Number (TIN)

The TIN may be found on one or both sides of the tire; however, the date code may only be on one side. Tires with white sidewalls will have the full TIN, including the date code, located on the white sidewall side of the tire. Look for the TIN on the outboard side of black sidewall tires as mounted on the vehicle. If the TIN is not found on the outboard side, then you will find it on the inboard side of the tire.

EXAMPLE:
DOT MA L9 ABCD 0301
DOT = Department of Transportation – This symbol certifies that the tire is in compliance with the U.S. Department of Transportation tire safety standards and is approved for highway use

EXAMPLE:
MA = Code representing the tire manufacturing location (two digits)
L9 = Code representing the tire size (two digits)
ABCD = Code used by the tire manufacturer (one to four digits)
03 = Number representing the week in which the tire was manufactured (two digits) – 03 means the 3rd week
01 = Number representing the year in which the tire was manufactured (two digits) – 01 means the year 2001 – Prior to July 2000, tire manufacturers were only required to have one number to represent the year in which the tire was manufactured. Example: 031 could represent the 3rd week of 1981 or 1991

Tire Terminology And Definitions

Term	Definition
B-Pillar	The vehicle B-Pillar is the structural member of the body located behind the front door.
Cold Tire Inflation Pressure	Cold tire inflation pressure is defined as the tire pressure after the vehicle has not been driven for at least three hours, or driven less than 1 mile (1.6 km) after sitting for a minimum of three hours. Inflation pressure is measured in units of PSI (pounds per square inch) or kPa (kilopascals).

Term	Definition
Maximum Inflation Pressure	The maximum inflation pressure is the maximum permissible cold tire inflation pressure for this tire. The maximum inflation pressure is molded into the sidewall.
Recommended Cold Tire Inflation Pressure	Vehicle manufacturer's recommended cold tire inflation pressure as shown on the tire placard.
Tire Placard	A label permanently attached to the vehicle describing the vehicle's loading capacity, the original equipment tire sizes and the recommended cold tire inflation pressures.

Tire Loading And Tire Pressure

NOTE: The proper cold tire inflation pressure is listed on the driver's side B-Pillar or the rear edge of the driver's side door.

Check the inflation pressure of each tire, including the spare tire (if equipped), at least monthly and inflate to the recommended pressure for your vehicle.

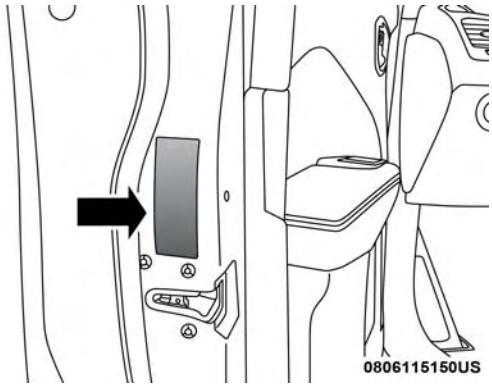

Example Tire Placard Location (Door)

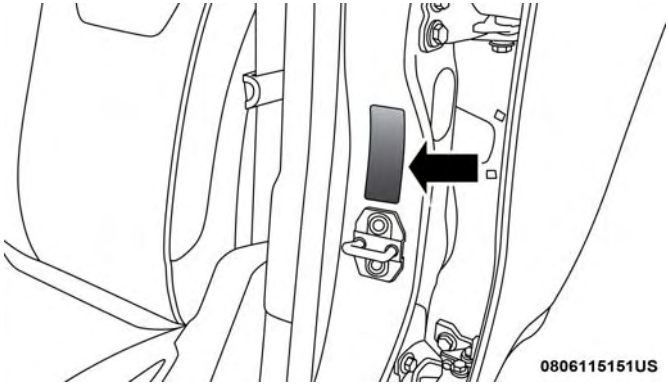

Example Tire Placard Location (B-Pillar)

Tire And Loading Information Placard

Tire And Loading Information Placard

This placard tells you important information about the:

1. Number of people that can be carried in the vehicle.
2. Total weight your vehicle can carry.
3. Tire size designed for your vehicle.
4. Cold tire inflation pressures for the front, rear, and spare tires.

Loading

The vehicle maximum load on the tire must not exceed the load carrying capacity of the tire on your vehicle. You will not exceed the tire's load carrying capacity if you adhere to the loading conditions, tire size, and cold tire inflation pressures specified on the Tire and Loading Information placard in "Vehicle Loading" in the "Starting And Operating" section of this manual.

NOTE: Under a maximum loaded vehicle condition, gross axle weight ratings (GAWRs) for the front and rear axles must not be exceeded.

For further information on GAWRs, vehicle loading, and trailer towing, refer to "Vehicle Loading" in the "Starting And Operating" section of this manual.

To determine the maximum loading conditions of your vehicle, locate the statement "The combined weight of occupants and cargo should never exceed XXX kg or XXX lbs" on the Tire and Loading Information placard. The combined weight of occupants, cargo/luggage and trailer tongue weight (if applicable) should never exceed the weight referenced here.

Steps For Determining Correct Load Limit—

(1) Locate the statement "The combined weight of occupants and cargo should never exceed XXX kg or XXX lbs." on your vehicle's placard.

(2) Determine the combined weight of the driver and passengers that will be riding in your vehicle.

(3) Subtract the combined weight of the driver and passengers from XXX kg or XXX lbs.

(4) The resulting figure equals the available amount of cargo and luggage load capacity. For example, if "XXX" amount equals 1400 lbs. and there will be five 150 lb passengers in your vehicle, the amount of available cargo and luggage load capacity is 650 lbs. (1400-750 (5x150) = 650 lbs.)

(5) Determine the combined weight of luggage and cargo being loaded on the vehicle. That weight may not safely exceed the available cargo and luggage load capacity calculated in Step 4.

(6) If your vehicle will be towing a trailer, load from your trailer will be transferred to your vehicle. Consult this manual to determine how this reduces the available cargo and luggage load capacity of your vehicle.

Metric Example For Load Limit

For example, if "XXX" amount equals 635 kg and there will be five 68 kg passengers in your vehicle, the amount of available cargo and luggage load capacity is 295 kg (635-340 (5x68) = 295 kg) as shown in step 4.

NOTE:

- If your vehicle will be towing a trailer, load from your trailer will be transferred to your vehicle. The following table shows examples on how to calculate total load, cargo/luggage, and towing capacities of your vehicle with varying seating configurations and number and size of occupants. This table is for illustration purposes only and may not be accurate for the seating and load carry capacity of your vehicle.
- For the following example, the combined weight of occupants and cargo should never exceed 865 lbs (392 kg).

Occupants			Combined weight of occupants and cargo from Tire Placard	MINUS	Combined Occupant's weight	=	AVAILABLE Cargo/Luggage and Trailer Tongue Weight
TOTAL	FRONT	REAR					
EXAMPLE 1							
5	2	3			Occupant 1: 200 lbs Occupant 2: 130 lbs Occupant 3: 160 lbs Occupant 4: 100 lbs Occupant 5: 80 lbs TOTAL WEIGHT: 670 lbs		
			865 lbs	minus	670 lbs	=	195 lbs
EXAMPLE 2							
3	2	1			Occupant 1: 210 lbs Occupant 2: 180 lbs Occupant 3: 150 lbs TOTAL WEIGHT: 540 lbs		
			865 lbs	minus	540 lbs	=	325 lbs
EXAMPLE 3							
2	2	0			Occupant 1: 200 lbs Occupant 2: 200 lbs TOTAL WEIGHT: 400 lbs		
			865 lbs	minus	400 lbs	=	465 lbs

EXAMPLE

811a4d11

WARNING!

Overloading of your tires is dangerous. Overloading can cause tire failure, affect vehicle handling, and increase your stopping distance. Use tires of the recommended load capacity for your vehicle. Never overload them.

Tires — General Information

Tire Pressure

Proper tire inflation pressure is essential to the safe and satisfactory operation of your vehicle. Four primary areas are affected by improper tire pressure:

- Safety and Vehicle Stability
- Economy
- Tread Wear
- Ride Comfort

Safety

WARNING!

- **Improperly inflated tires are dangerous and can cause collisions.**
- **Underinflation increases tire flexing and can result in overheating and tire failure.**
- **Overinflation reduces a tire's ability to cushion shock. Objects on the road and chuckholes can cause damage that result in tire failure.**

(Continued)

WARNING! *(Continued)*

- **Overinflated or underinflated tires can affect vehicle handling and can fail suddenly, resulting in loss of vehicle control.**
- **Unequal tire pressures can cause steering problems. You could lose control of your vehicle.**
- **Unequal tire pressures from one side of the vehicle to the other can cause the vehicle to drift to the right or left.**
- **Always drive with each tire inflated to the recommended cold tire inflation pressure.**

Both under-inflation and over-inflation affect the stability of the vehicle and can produce a feeling of sluggish response or over responsiveness in the steering.

NOTE:

- Unequal tire pressures from side to side may cause erratic and unpredictable steering response.
- Unequal tire pressure from side to side may cause the vehicle to drift left or right.

Fuel Economy

Underinflated tires will increase tire rolling resistance resulting in higher fuel consumption.

Tread Wear

Improper cold tire inflation pressures can cause abnormal wear patterns and reduced tread life, resulting in the need for earlier tire replacement.

Ride Comfort And Vehicle Stability

Proper tire inflation contributes to a comfortable ride. Over-inflation produces a jarring and uncomfortable ride.

Tire Inflation Pressures

The proper cold tire inflation pressure is listed on the driver's side B-Pillar or rear edge of the driver's side door.

At least once a month:

- Check and adjust tire pressure with a good quality pocket-type pressure gauge. Do not make a visual judgement when determining proper inflation. Tires may look properly inflated even when they are under-inflated.
- Inspect tires for signs of tire wear or visible damage.

CAUTION!

After inspecting or adjusting the tire pressure, always reinstall the valve stem cap. This will prevent moisture and dirt from entering the valve stem, which could damage the valve stem.

Inflation pressures specified on the placard are always "cold tire inflation pressure". Cold tire inflation pressure is defined as the tire pressure after the vehicle has not been driven for at least three hours, or driven less than 1 mile (1.6 km) after sitting for a minimum of three hours. The cold tire inflation pressure must not exceed the maximum inflation pressure molded into the tire sidewall.

Check tire pressures more often if subject to a wide range of outdoor temperatures, as tire pressures vary with temperature changes.

Tire pressures change by approximately 1 psi (7 kPa) per 12°F (7°C) of air temperature change. Keep this in mind when checking tire pressure inside a garage, especially in the Winter.

Example: If garage temperature = 68°F (20°C) and the outside temperature = 32°F (0°C) then the cold tire inflation pressure should be increased by 3 psi (21 kPa), which equals 1 psi (7 kPa) for every 12°F (7°C) for this outside temperature condition.

Tire pressure may increase from 2 to 6 psi (13 to 40 kPa) during operation. DO NOT reduce this normal pressure build up or your tire pressure will be too low.

Tire Pressures For High Speed Operation

The manufacturer advocates driving at safe speeds and within posted speed limits. Where speed limits or conditions are such that the vehicle can be driven at high speeds, maintaining correct tire inflation pressure is very important. Increased tire pressure and reduced vehicle loading may be required for high-speed vehicle operation. Refer to your authorized tire dealer or original equipment vehicle dealer for recommended safe operating speeds, loading and cold tire inflation pressures.

WARNING!

High speed driving with your vehicle under maximum load is dangerous. The added strain on your tires could

(Continued)

WARNING! *(Continued)*

cause them to fail. You could have a serious collision. Do not drive a vehicle loaded to the maximum capacity at continuous speeds above 75 mph (120 km/h).

Radial Ply Tires

WARNING!

Combining radial ply tires with other types of tires on your vehicle will cause your vehicle to handle poorly. The instability could cause a collision. Always use radial ply tires in sets of four. Never combine them with other types of tires.

Tire Repair

If your tire becomes damaged, it may be repaired if it meets the following criteria:

- The tire has not been driven on when flat.
- The damage is only on the tread section of your tire (sidewall damage is not repairable).
- The puncture is no greater than a ¼ of an inch (6 mm).

Consult an authorized tire dealer for tire repairs and additional information.

Damaged Run Flat tires, or Run Flat tires that have experienced a loss of pressure should be replaced immediately with another Run Flat tire of identical size and service description (Load Index and Speed Symbol).

Run Flat Tires — If Equipped

Run Flat tires allow you the capability to drive 50 miles (80 km) at 50 mph (80 km/h) after a rapid loss of inflation pressure. This rapid loss of inflation is referred to as the Run Flat mode. A Run Flat mode occurs when the tire inflation pressure is of/or below 14 psi (96 kPa). Once a Run Flat tire reaches the run flat mode it has limited driving capabilities and needs to be replaced immediately. A Run Flat tire is not repairable.

It is not recommended driving a vehicle loaded at full capacity or to tow a trailer while a tire is in the run flat mode.

See the tire pressure monitoring section for more information.

Tire Spinning

When stuck in mud, sand, snow, or ice conditions, do not spin your vehicle's wheels above 30 mph (48 km/h) or for longer than 30 seconds continuously without stopping.

Refer to "Freeing A Stuck Vehicle" in "In Case Of Emergency" for further information.

WARNING!

Fast spinning tires can be dangerous. Forces generated by excessive wheel speeds may cause tire damage or failure. A tire could explode and injure someone. Do not spin your vehicle's wheels faster than 30 mph (48 km/h) for more than 30 seconds continuously when you are stuck, and do not let anyone near a spinning wheel, no matter what the speed.

Tread Wear Indicators

Tread wear indicators are in the original equipment tires to help you in determining when your tires should be replaced.

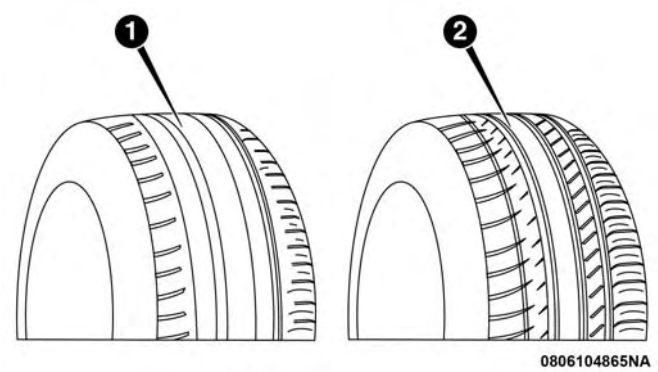

Tire Tread

1 — Worn Tire
2 — New Tire

These indicators are molded into the bottom of the tread grooves. They will appear as bands when the tread depth becomes a 1/16 of an inch (1.6 mm). When the tread is worn to the tread wear indicators, the tire should be replaced. Refer to "Replacement Tires" in this section for further information.

Life Of Tire

The service life of a tire is dependent upon varying factors including, but not limited to:

- Driving style.
- Tire pressure - Improper cold tire inflation pressures can cause uneven wear patterns to develop across the tire tread. These abnormal wear patterns will reduce tread life, resulting in the need for earlier tire replacement.
- Distance driven.
- Performance tires, tires with a speed rating of V or higher, and Summer tires typically have a reduced tread life. Rotation of these tires per the vehicle scheduled maintenance is highly recommended.

WARNING!

Tires and the spare tire should be replaced after six years, regardless of the remaining tread. Failure to follow this warning can result in sudden tire failure. You could lose control and have a collision resulting in serious injury or death.

Keep dismounted tires in a cool, dry place with as little exposure to light as possible. Protect tires from contact with oil, grease, and gasoline.

Replacement Tires

The tires on your new vehicle provide a balance of many characteristics. They should be inspected regularly for wear and correct cold tire inflation pressures. The manufacturer strongly recommends that you use tires equivalent to the originals in size, quality and performance when replacement is needed. Refer to the paragraph on "Tread Wear Indicators" in this section. Refer to the Tire and Loading Information placard or the Vehicle Certification Label for the size designation of your tire. The Load Index and Speed Symbol for your tire will be found on the original equipment tire sidewall.

See the Tire Sizing Chart example found in the "Tire Safety Information" section of this manual for more information relating to the Load Index and Speed Symbol of a tire.

It is recommended to replace the two front tires or two rear tires as a pair. Replacing just one tire can seriously affect your vehicle's handling. If you ever replace a wheel, make sure that the wheel's specifications match those of the original wheels.

It is recommended you contact your authorized tire dealer or original equipment dealer with any questions you may have on tire specifications or capability. Failure to use equivalent replacement tires may adversely affect the safety, handling, and ride of your vehicle.

WARNING!

- **Do not use a tire, wheel size, load rating, or speed rating other than that specified for your vehicle. Some combinations of unapproved tires and wheels may change suspension dimensions and performance characteristics, resulting in changes to steering, handling, and braking of your vehicle. This can cause unpredictable handling and stress to steering and suspension components. You could lose control and have a collision resulting in serious injury or death. Use only the tire and wheel sizes with load ratings approved for your vehicle.**
- **Never use a tire with a smaller load index or capacity, other than what was originally equipped on your vehicle. Using a tire with a smaller load index could result in tire overloading and failure. You could lose control and have a collision.**

(Continued)

WARNING! *(Continued)*

- **Failure to equip your vehicle with tires having adequate speed capability can result in sudden tire failure and loss of vehicle control.**

CAUTION!

Replacing original tires with tires of a different size may result in false speedometer and odometer readings.

Tire Types

All Season Tires — If Equipped

All Season tires provide traction for all seasons (Spring, Summer, Fall, and Winter). Traction levels may vary between different all season tires. All season tires can be identified by the M+S, M&S, M/S or MS designation on the tire sidewall. Use all season tires only in sets of four; failure to do so may adversely affect the safety and handling of your vehicle.

Summer Or Three Season Tires — If Equipped

Summer tires provide traction in both wet and dry conditions, and are not intended to be driven in snow or on ice. If your vehicle is equipped with Summer tires, be aware these tires are not designed for Winter or cold driving conditions. Install Winter tires on your vehicle when ambient temperatures are less than 40°F (5°C) or if roads are covered with ice or snow. For more information, contact an authorized dealer.

Summer tires do not contain the all season designation or mountain/snowflake symbol on the tire sidewall. Use Summer tires only in sets of four; failure to do so may adversely affect the safety and handling of your vehicle.

WARNING!

Do not use Summer tires in snow/ice conditions. You could lose vehicle control, resulting in severe injury or death. Driving too fast for conditions also creates the possibility of loss of vehicle control.

Snow Tires

Some areas of the country require the use of snow tires during the Winter. Snow tires can be identified by a "mountain/snowflake" symbol on the tire sidewall.

If you need snow tires, select tires equivalent in size and type to the original equipment tires. Use snow tires only in sets of four; failure to do so may adversely affect the safety and handling of your vehicle.

Snow tires generally have lower speed ratings than what was originally equipped with your vehicle and should not be operated at sustained speeds over 75 mph (120 km/h). For speeds above 75 mph (120 km/h) refer to original equipment or an authorized tire dealer for recommended safe operating speeds, loading and cold tire inflation pressures.

While studded tires improve performance on ice, skid and traction capability on wet or dry surfaces may be poorer than that of non-studded tires. Some states prohibit studded tires; therefore, local laws should be checked before using these tire types.

Spare Tires — If Equipped

NOTE: For vehicles equipped with Tire Service Kit instead of a spare tire, please refer to "Tire Service Kit" in "In Case Of Emergency" for further information.

CAUTION!

Because of the reduced ground clearance, do not take your vehicle through an automatic car wash with a compact or limited use temporary spare installed. Damage to the vehicle may result.

Spare Tire Matching Original Equipped Tire And Wheel — If Equipped

Your vehicle may be equipped with a spare tire and wheel equivalent in look and function to the original equipment tire and wheel found on the front or rear axle of your vehicle. This spare tire may be used in the tire rotation for your vehicle. If your vehicle has this option, refer to an authorized tire dealer for the recommended tire rotation pattern.

Compact Spare Tire — If Equipped

The compact spare is for temporary emergency use only. You can identify if your vehicle is equipped with a compact spare by looking at the spare tire description on the Tire and Loading Information Placard located on the driver's side door opening or on the sidewall of the tire. Compact spare tire descriptions begin with the letter "T" or "S" preceding the size designation. Example: T145/80D18 103M.

T, S = Temporary Spare Tire

Since this tire has limited tread life, the original equipment tire should be repaired (or replaced) and reinstalled on your vehicle at the first opportunity.

Do not install a wheel cover or attempt to mount a conventional tire on the compact spare wheel, since the wheel is designed specifically for the compact spare tire. Do not install more than one compact spare tire and wheel on the vehicle at any given time.

WARNING!

Compact and collapsible spares are for temporary emergency use only. With these spares, do not drive

(Continued)

WARNING! ***(Continued)***

more than 50 mph (80 km/h). Temporary use spares have limited tread life. When the tread is worn to the tread wear indicators, the temporary use spare tire needs to be replaced. Be sure to follow the warnings, which apply to your spare. Failure to do so could result in spare tire failure and loss of vehicle control.

Full Size Spare — If Equipped

The full size spare is for temporary emergency use only. This tire may look like the originally equipped tire on the front or rear axle of your vehicle, but it is not. This spare tire may have limited tread life. When the tread is worn to the tread wear indicators, the temporary use full size spare tire needs to be replaced. Since it is not the same as your original equipment tire, replace (or repair) the original equipment tire and reinstall on the vehicle at the first opportunity.

Limited Use Spare — If Equipped

The limited use spare tire is for temporary emergency use only. This tire is identified by a label located on the limited use spare wheel. This label contains the driving limitations for this spare. This tire may look like the original equipped tire on the front or rear axle of your vehicle, but it is not.

Installation of this limited use spare tire affects vehicle handling. Since it is not the same as your original equipment tire, replace (or repair) the original equipment tire and reinstall on the vehicle at the first opportunity.

WARNING!

Limited use spares are for emergency use only. Installation of this limited use spare tire affects vehicle handling. With this tire, do not drive more than the speed listed on the limited use spare wheel. Keep inflated to the cold tire inflation pressures listed on your Tire and Loading Information Placard located on the driver's side B-Pillar or the rear edge of the driver's side door. Replace (or repair) the original equipment tire at the first opportunity and reinstall it on your vehicle. Failure to do so could result in loss of vehicle control.

Wheel And Wheel Trim Care

All wheels and wheel trim, especially aluminum and chrome plated wheels, should be cleaned regularly using mild (neutral Ph) soap and water to maintain their luster and to prevent corrosion. Wash wheels with the same soap solution recommended for the body of the vehicle.

Your wheels are susceptible to deterioration caused by salt, sodium chloride, magnesium chloride, calcium chloride, etc., and other road chemicals used to melt ice or control dust on dirt roads. Use a soft cloth or sponge and mild soap to wipe away promptly. Do not use harsh chemicals or a stiff brush. They can damage the wheel's protective coating that helps keep them from corroding and tarnishing.

CAUTION!

Avoid products or automatic car washes that use acidic solutions or strong alkaline additives or harsh brushes. Many aftermarket wheel cleaners and automatic car washes may damage the wheel's protective finish. Such damage is not covered by the New Vehicle Limited Warranty. Only car wash soap, Mopar Wheel Cleaner or equivalent is recommended.

When cleaning extremely dirty wheels including excessive brake dust, care must be taken in the selection of tire and wheel cleaning chemicals and equipment to prevent damage to the wheels. Mopar Wheel Treatment or Mopar Chrome Cleaner or their equivalent is recommended or select a non-abrasive, non-acidic cleaner for aluminum or chrome wheels.

CAUTION!

Do not use scouring pads, steel wool, a bristle brush, metal polishes or oven cleaner. These products may damage the wheel's protective finish. Such damage is not covered by the New Vehicle Limited Warranty. Only car wash soap, Mopar Wheel Cleaner or equivalent is recommended.

NOTE: If you intend parking or storing your vehicle for an extended period after cleaning the wheels with wheel cleaner, drive your vehicle and apply the brakes to remove the water droplets from the brake components. This activity will remove the red rust on the brake rotors and prevent vehicle vibration when braking.

Dark Vapor Chrome, Black Satin Chrome, or Low Gloss Clear Coat Wheels

CAUTION!

If your vehicle is equipped with these specialty wheels, DO NOT USE wheel cleaners, abrasives, or polishing compounds. They will permanently damage this finish and such damage is not covered by the New

(Continued)

CAUTION! *(Continued)*

Vehicle Limited Warranty. HAND WASH ONLY USING MILD SOAP AND WATER WITH A SOFT CLOTH. Used on a regular basis; this is all that is required to maintain this finish.

Tire Chains (Traction Devices)

Use of traction devices require sufficient tire-to-body clearance. Follow these recommendations to guard against damage.

- Traction device must be of proper size for the tire, as recommended by the traction device manufacturer.
- Install on Rear Tires Only.
- P225/75R16 or a P235/65R17 tire with the use of a traction device that meets the SAE type "Class S" specification is recommended.

WARNING!

Using tires of different size and type (M+S, Snow) between front and rear axles can cause unpredictable handling. You could lose control and have a collision.

CAUTION!

To avoid damage to your vehicle or tires, observe the following precautions:

- **Because of restricted traction device clearance between tires and other suspension components, it is important that only traction devices in good condition are used. Broken devices can cause serious damage. Stop the vehicle immediately if noise occurs that could indicate device breakage. Remove the damaged parts of the device before further use.**
- **Install device as tightly as possible and then retighten after driving about ½ mile (0.8 km).**
- **Do not exceed 30 mph (48 km/h).**
- **Drive cautiously and avoid severe turns and large bumps, especially with a loaded vehicle.**
- **Do not drive for a prolonged period on dry pavement.**
- **Observe the traction device manufacturer's instructions on the method of installation, operating speed, and conditions for use. Always use the suggested operating speed of the device manufacturer's if it is less than 30 mph (48 km/h).**
- **Do not use traction devices on a compact spare tire.**

Tire Rotation Recommendations

The tires on the front and rear of your vehicle operate at different loads and perform different steering, handling, and braking functions. For these reasons, they wear at unequal rates.

These effects can be reduced by timely rotation of tires. The benefits of rotation are especially worthwhile with aggressive tread designs such as those on On/Off Road type tires. Rotation will increase tread life, help to maintain mud, snow, and wet traction levels, and contribute to a smooth, quiet ride.

Refer to the "Maintenance Plan" for the proper maintenance intervals. The reasons for any rapid or unusual wear should be corrected prior to rotation being performed.

The suggested rotation method is the "rearward-cross" shown in the following diagram.

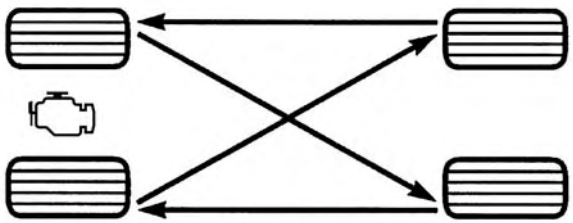

055703771

Tire Rotation

CAUTION!

Proper operation of four-wheel drive vehicles depends on tires of equal size, type and circumference on each wheel. Any difference in tire size can cause damage to the transfer case. Tire rotation schedule should be followed to balance tire wear.

DEPARTMENT OF TRANSPORTATION UNIFORM TIRE QUALITY GRADES

The following tire grading categories were established by the National Highway Traffic Safety Administration. The specific grade rating assigned by the tire's manufacturer in each category is shown on the sidewall of the tires on your vehicle.

All passenger vehicle tires must conform to Federal safety requirements in addition to these grades.

Treadwear

The Treadwear grade is a comparative rating, based on the wear rate of the tire when tested under controlled conditions on a specified government test course. For example, a tire graded 150 would wear one and one-half times as well on the government course as a tire graded 100. The relative performance of tires depends upon the actual conditions of their use, however, and may depart significantly from the norm due to variations in driving habits, service practices, and differences in road characteristics and climate.

Traction Grades

The Traction grades, from highest to lowest, are AA, A, B, and C. These grades represent the tire's ability to stop on wet pavement, as measured under controlled conditions on specified government test surfaces of asphalt and concrete. A tire marked C may have poor traction performance.

WARNING!

The traction grade assigned to this tire is based on straight-ahead braking traction tests, and does not include acceleration, cornering, hydroplaning, or peak traction characteristics.

Temperature Grades

The Temperature grades are A (the highest), B, and C, representing the tire's resistance to the generation of heat and its ability to dissipate heat, when tested under controlled conditions on a specified indoor laboratory test wheel.

Sustained high temperature can cause the material of the tire to degenerate and reduce tire life, and excessive temperature can lead to sudden tire failure. The grade C corresponds to a level of performance, which all passenger vehicle tires must meet under the Federal Motor Vehicle Safety Standard No. 109. Grades B and A represent higher levels of performance on the laboratory test wheel, than the minimum required by law.

WARNING!

The temperature grade for this tire is established for a tire that is properly inflated and not overloaded. Excessive speed, under-inflation, or excessive loading, either separately or in combination, can cause heat buildup and possible tire failure.

STORING THE VEHICLE

If you are storing your vehicle for more than 21 days, we recommend that you take the following steps to minimize the drain on your vehicle's battery:

- Disconnect the negative cable from battery.
- Any time you store your vehicle or keep it out of service (i.e., vacation) for two weeks or more, run the air conditioning system at idle for about five minutes in the fresh air and high blower setting. This will ensure adequate system lubrication to minimize the possibility of compressor damage when the system is started again.

BODYWORK

Protection From Atmospheric Agents

Vehicle body care requirements vary according to geographic locations and usage. Chemicals that make roads passable in snow and ice and those that are sprayed on trees and road surfaces during other seasons are highly corrosive to the metal in your vehicle. Outside parking, which exposes your vehicle to airborne contaminants, road surfaces on which the vehicle is operated, extreme hot or cold weather and other extreme conditions will have an adverse effect on paint, metal trim, and underbody protection.

The following maintenance recommendations will enable you to obtain maximum benefit from the corrosion resistance built into your vehicle.

What Causes Corrosion?

Corrosion is the result of deterioration or removal of paint and protective coatings from your vehicle.

The most common causes are:

- Road salt, dirt and moisture accumulation.
- Stone and gravel impact.
- Insects, tree sap and tar.
- Salt in the air near seacoast localities.
- Atmospheric fallout/industrial pollutants.

Body And Underbody Maintenance

Cleaning Headlights

Your vehicle is equipped with plastic headlights and fog lights that are lighter and less susceptible to stone breakage than glass headlights.

Plastic is not as scratch resistant as glass and therefore different lens cleaning procedures must be followed.

To minimize the possibility of scratching the lenses and reducing light output, avoid wiping with a dry cloth. To remove road dirt, wash with a mild soap solution followed by rinsing.

Do not use abrasive cleaning components, solvents, steel wool or other aggressive material to clean the lenses.

Preserving The Bodywork

Washing

- Wash your vehicle regularly. Always wash your vehicle in the shade using Mopar Car Wash, or a mild car wash soap, and rinse the panels completely with clear water.
- If insects, tar, or other similar deposits have accumulated on your vehicle, use Mopar Super Kleen Bug and Tar Remover to remove.
- Use a high quality cleaner wax, such as Mopar Cleaner Wax to remove road film, stains and to protect your paint finish. Take care never to scratch the paint.
- Avoid using abrasive compounds and power buffing that may diminish the gloss or thin out the paint finish.

CAUTION!

- **Do not use abrasive or strong cleaning materials such as steel wool or scouring powder that will scratch metal and painted surfaces.**
- **Use of power washers exceeding 1,200 psi (8,274 kPa) can result in damage or removal of paint and decals.**

Special Care

- If you drive on salted or dusty roads or if you drive near the ocean, hose off the undercarriage at least once a month.
- It is important that the drain holes in the lower edges of the doors, rocker panels, and trunk be kept clear and open.
- If you detect any stone chips or scratches in the paint, touch them up immediately. The cost of such repairs is considered the responsibility of the owner.
- If your vehicle is damaged due to a collision or similar cause that destroys the paint and protective coating, have your vehicle repaired as soon as possible. The cost of such repairs is considered the responsibility of the owner.
- If you carry special cargo such as chemicals, fertilizers, de-icer salt, etc., be sure that such materials are well packaged and sealed.
- If a lot of driving is done on gravel roads, consider mud or stone shields behind each wheel.
- Use Mopar Touch Up Paint on scratches as soon as possible. Your authorized dealer has touch up paint to match the color of your vehicle.

Appearance Care For Fabric Top Models

To maintain the appearance of your vehicle's interior trim and top, follow these precautions:

- Avoid leaving your vehicle unattended with the top down, as exposure to sun or rain may damage interior trim.
- Do not use harsh cleaners or bleaching agents on top material, as damage may result.
- Do not allow any vinyl cleaner to run down and dry on the paint, leaving a streak.
- After cleaning your vehicle's fabric top, always make sure it is completely dry before lowering.
- Be especially careful when washing the windows by following the directions for "Care of Fabric Top Windows."

Washing – Use Mopar Car Wash or equivalent, or mild soap suds, lukewarm water, and a brush with soft bristles. If extra cleaning is required, use Mopar Convertible Cloth Top Cleaner or equivalent, or a mild foaming cleaner on the entire top, but support the top from underneath.

Rinsing – Be sure to remove all traces of cleaner by rinsing the top thoroughly with clean water. Remember to allow the top to dry before lowering it.

CAUTION!

Failure to follow these cautions may cause interior water damage, stains or mildew on the top material:

- **Avoid high-pressure car washes, as they can damage the top material. Also, increased water pressure may force past the weather strips.**
- **It is recommended that the top be free of water prior to opening it. Operating the top, opening a door or lowering a window while the top is wet may allow water to drip into the vehicle's interior.**
- **Use care when washing the vehicle, water pressure directed at the weather strip seals may cause water to leak into the vehicle's interior.**
- **Careless handling and storage of the removable roof panels may damage the seals, causing water to leak into the vehicle's interior.**
- **The front panel(s) must be positioned properly to ensure sealing. Improper installation can cause water to leak into the vehicle's interior.**

Care Of Fabric Top Windows

Your vehicle's fabric top has pliable plastic windows which can be scratched unless special care is taken by following these directions:

1. Never use a dry cloth to remove dust. Instead, **use a microfiber towel or soft cotton cloth moistened with cold or warm, clean water, and wipe across the window, not up and down.** Mopar Jeep Soft Glass Window Cleaner or equivalent will safely clean all plastic windows without scratching. It removes fine scratches to improve visibility and provides UV protection to help prevent yellowing.
2. When washing, **never use hot water** or anything stronger than a mild soap. Never use solvents such as alcohol or harsh cleaning agents.
3. Always rinse thoroughly with cold water, then wipe with a soft and slightly moist, clean cloth.
4. When removing frost, snow or ice, **never use a scraper or de-icing chemicals.** Use warm water only if you must clean the window quickly.
5. Debris (sand, mud/dirt, dust, or salt) from off-road driving will have a major impact on zipper operation. Even normal on-road driving and vehicle washing will eventually impact window zipper operation. To maintain ease of use of the window zippers, each window zipper should be cleaned and lubricated regularly. Use Mopar Soft Top Zipper Cleaner and Lubricant or equivalent to ease zipper operation. Before applying, make sure the zipper teeth are clear of sand, mud, and other materials. Clean both sides of the zipper, not just one side. Rinse both zipper halves with fresh water and allow to dry. Aggressively work the Mopar Soft Top Zipper Cleaner and Lubricant or equivalent into the zipper teeth. If a stuck zipper slide is experienced, work the Mopar Soft Top Zipper Cleaner and Lubricant or equivalent into the zipper slide. Several applications may be required before the zipper comes free.
6. Never paste stickers, gummed labels or any tape to the windows. Adhesives are hard to remove and may damage the windows.

INTERIORS

Seats And Fabric Parts

Use Mopar Total Clean to clean fabric upholstery and carpeting.

WARNING!

Do not use volatile solvents for cleaning purposes. Many are potentially flammable, and if used in closed areas they may cause respiratory harm.

Seat Belt Maintenance

Do not bleach, dye or clean the belts with chemical solvents or abrasive cleaners. This will weaken the fabric. Sun damage can also weaken the fabric.

If the belts need cleaning, use a mild soap solution or lukewarm water. Do not remove the belts from the vehicle to wash them. Dry with a soft cloth.

Replace the belts if they appear frayed or worn or if the buckles do not work properly.

WARNING!

A frayed or torn belt could rip apart in a collision and leave you with no protection. Inspect the belt system periodically, checking for cuts, frays, or loose parts. Damaged parts must be replaced immediately. Do not disassemble or modify the system. Seat belt assemblies

(Continued)

WARNING! *(Continued)*

must be replaced after a collision if they have been damaged (i.e., bent retractor, torn webbing, etc.).

Plastic And Coated Parts

Use Mopar Total Clean to clean vinyl upholstery.

CAUTION!

- **Direct contact of air fresheners, insect repellents, suntan lotions, or hand sanitizers to the plastic, painted, or decorated surfaces of the interior may cause permanent damage. Wipe away immediately.**
- **Damage caused by these type of products may not be covered by your New Vehicle Limited Warranty.**

Cleaning Plastic Instrument Cluster Lenses

The lenses in front of the instruments in this vehicle are molded in clear plastic. When cleaning the lenses, care must be taken to avoid scratching the plastic.

1. Clean with a wet soft cloth. A mild soap solution may be used, but do not use high alcohol content or abrasive cleaners. If soap is used, wipe clean with a clean damp cloth.
2. Dry with a soft cloth.

Leather Parts

Mopar Total Clean is specifically recommended for leather upholstery.

Your leather upholstery can be best preserved by regular cleaning with a damp soft cloth. Small particles of dirt can act as an abrasive and damage the leather upholstery and should be removed promptly with a damp cloth. Stubborn soils can be removed easily with a soft cloth and Mopar Total Clean. Care should be taken to avoid soaking your leather upholstery with any liquid. Please do not use polishes, oils, cleaning fluids, solvents, detergents, or ammonia-based cleaners to clean your leather upholstery. Application of a leather conditioner is not required to maintain the original condition.

NOTE: If equipped with light colored leather, it tends to show any foreign material, dirt, and fabric dye transfer more so than darker colors. The leather is designed for easy cleaning, and FCA recommends Mopar total care leather cleaner applied on a cloth to clean the leather seats as needed.

CAUTION!

Do not use Alcohol and Alcohol-based and/or Ketone based cleaning products to clean leather seats, as damage to the seat may result.

Glass Surfaces

All glass surfaces should be cleaned on a regular basis with Mopar Glass Cleaner, or any commercial household-type glass cleaner. Never use an abrasive type cleaner. Use caution when cleaning the inside rear window equipped with electric defrosters or windows equipped with radio antennas. Do not use scrapers or other sharp instruments that may scratch the elements.

When cleaning the rear view mirror, spray cleaner on the towel or cloth that you are using. Do not spray cleaner directly on the mirror.

TECHNICAL SPECIFICATIONS

CONTENTS

- VEHICLE IDENTIFICATION NUMBER 426
- BRAKE SYSTEM 426
- WHEEL AND TIRE TORQUE SPECIFICATIONS . .426
  - Torque Specifications 427
- FUEL REQUIREMENTS. 428
  - 3.6L Engine 428
  - Reformulated Gasoline 428
  - Materials Added To Fuel 429
  - Gasoline/Oxygenate Blends 429
  - Do Not Use E-85 In Non-Flex Fuel Vehicles 429
  - CNG And LP Fuel System Modifications 430
  - MMT In Gasoline. 430
  - Fuel System Cautions 430
  - Carbon Monoxide Warnings 431
- FLUID CAPACITIES 432
- FLUIDS AND LUBRICANTS 433
  - Engine 433
  - Chassis 434

VEHICLE IDENTIFICATION NUMBER

The Vehicle Identification Number (VIN) is found on the left front corner of the instrument panel pad, visible from outside of the vehicle through the windshield. This number also appears underbody, on the right side of the frame rail near the center of the vehicle, as well as on the Automobile Information Disclosure Label affixed to a window on your vehicle. Save this label for a convenient record of your vehicle identification number and optional equipment.

The VIN is also stamped on either right or left hand side of the engine block.

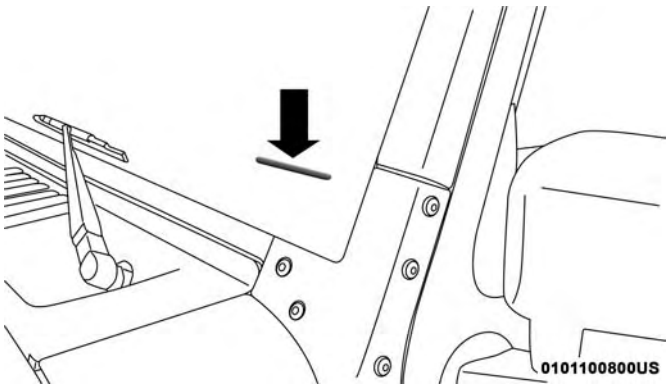

Vehicle Identification Number

NOTE: It is illegal to remove or alter the VIN plate.

BRAKE SYSTEM

Your vehicle is equipped with dual hydraulic brake systems. If either of the two hydraulic systems loses normal capability, the remaining system will still function. However, there will be some loss of overall braking effectiveness. You may notice increased pedal travel during application, greater pedal force required to slow or stop, and potential activation of the Brake Warning Light.

In the event power assist is lost for any reason (i.e., repeated brake applications with the engine off) the brakes will still function. However, the effort required to brake the vehicle will be much greater than that required with the power system operating.

WHEEL AND TIRE TORQUE SPECIFICATIONS

Proper lug nut/bolt torque is very important to ensure that the wheel is properly mounted to the vehicle. Any time a wheel has been removed and reinstalled on the vehicle, the lug nuts/bolts should be torqued using a properly calibrated torque wrench using a high quality six sided (hex) deep wall socket.

Torque Specifications

Lug Nut/Bolt Torque	**Lug Nut/Bolt Size	Lug Nut/Bolt Socket Size
100 Ft-Lbs (135 N·m)	1/2″ x 20	19 mm

**Use only your authorized dealer recommended lug nuts/bolts and clean or remove any dirt or oil before tightening.

Inspect the wheel mounting surface prior to mounting the tire and remove any corrosion or loose particles.

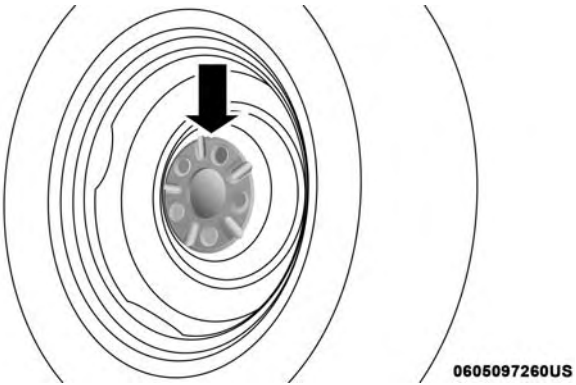

Wheel Mounting Surface

Tighten the lug nuts/bolts in a star pattern until each nut/bolt has been tightened twice. Ensure that the socket is fully engaged on the lug nut/bolt (do not insert it half-way).

Torque Patterns

After 25 miles (40 km), check the lug nut/bolt torque to be sure that all the lug nuts/bolts are properly seated against the wheel.

WARNING!

To avoid the risk of forcing the vehicle off the jack, do not tighten the lug nuts fully until the vehicle has been lowered. Failure to follow this warning may result in personal injury.

FUEL REQUIREMENTS

3.6L Engine

This engine is designed to meet all emissions regulations and provide excellent fuel economy and performance when using high-quality unleaded "Regular" gasoline having an octane rating of 87 as specified by the (R+M)/2 method. The use of higher octane "Premium" gasoline will not provide any benefit over "Regular" gasoline in these engines.

While operating on gasoline with an octane number of 87, hearing a light knocking sound from the engine is not a cause for concern. However, if the engine is heard making a heavy knocking sound, see your dealer immediately. Use of gasoline with an octane number lower than 87 can cause engine failure and may void or not be covered by the New Vehicle Limited Warranty.

Poor quality gasoline can cause problems such as hard starting, stalling, and hesitations. If you experience these symptoms, try another brand of gasoline before considering service for the vehicle.

Reformulated Gasoline

Many areas of the country require the use of cleaner burning gasoline referred to as "Reformulated Gasoline". Reformulated gasoline contains oxygenates and are specifically blended to reduce vehicle emissions and improve air quality.

The use of reformulated gasoline is recommended. Properly blended reformulated gasoline will provide improved performance and durability of engine and fuel system components.

Materials Added To Fuel

Besides using unleaded gasoline with the proper octane rating, gasolines that contain detergents, corrosion and stability additives are recommended. Using gasolines that have these additives will help improve fuel economy, reduce emissions, and maintain vehicle performance.

Designated TOP TIER Detergent Gasoline contains a higher level of detergents to further aide in minimizing engine and fuel system deposits. When available, the usage of Top Tier Detergent gasoline is recommended. Visit www.toptiergas.com for a list of TOP TIER Detergent Gasoline Retailers.

Indiscriminate use of fuel system cleaning agents should be avoided. Many of these materials intended for gum and varnish removal may contain active solvents or similar ingredients. These can harm fuel system gasket and diaphragm materials.

Gasoline/Oxygenate Blends

Some fuel suppliers blend unleaded gasoline with oxygenates such as ethanol.

CAUTION!

DO NOT use E-85, gasoline containing methanol, or gasoline containing more than 15% ethanol (E-15). Use of these blends may result in starting and drivability problems, damage critical fuel system components, cause emissions to exceed the applicable standard, and/or cause the "Malfunction Indicator Light" to illuminate. Please observe pump labels as they should clearly communicate if a fuel contains greater than 15% ethanol (E-15).

Problems that result from using gasoline containing more than 15% ethanol (E-15) or gasoline containing methanol are not the responsibility of the manufacturer and may void or not be covered under New Vehicle Limited Warranty.

Do Not Use E-85 In Non-Flex Fuel Vehicles

Non-Flex Fuel Vehicles (FFV) are compatible with gasoline containing up to 15% ethanol (E-15). Use of gasoline with higher ethanol content may void the New Vehicle Limited Warranty.

If a Non-FFV vehicle is inadvertently fueled with E-85 fuel, the engine will have some or all of these symptoms:

- Operate in a lean mode.
- OBD II "Malfunction Indicator Light" on.
- Poor engine performance.
- Poor cold start and cold drivability.
- Increased risk for fuel system component corrosion.

CNG And LP Fuel System Modifications

Modifications that allow the engine to run on compressed natural gas (CNG) or liquid propane (LP) may result in damage to the engine, emissions, and fuel system components. Problems that result from running CNG or LP are not the responsibility of the manufacturer and may void or not be covered under the New Vehicle Limited Warranty.

MMT In Gasoline

Methylcyclopentadienyl Manganese Tricarbonyl (MMT) is a manganese-containing metallic additive that is blended into some gasoline to increase octane. Gasoline blended with MMT provides no performance advantage beyond gasoline of the same octane number without MMT. Gasoline blended with MMT reduces spark plug life and reduces emissions system performance in some vehicles. The manufacturer recommends that gasoline without MMT be used in your vehicle. The MMT content of gasoline may not be indicated on the gasoline pump; therefore, you should ask your gasoline retailer whether the gasoline contains MMT. MMT is prohibited in Federal and California reformulated gasoline.

Fuel System Cautions

CAUTION!

Follow these guidelines to maintain your vehicle's performance:

- **The use of leaded gasoline is prohibited by Federal law. Using leaded gasoline can impair engine performance and damage the emissions control system.**
- **An out-of-tune engine or certain fuel or ignition malfunctions can cause the catalytic converter to overheat. If you notice a pungent burning odor or some light smoke, your engine may be out of tune or malfunctioning and may require immediate service. Contact your authorized dealer for service assistance.**
- **The use of fuel additives, which are now being sold as octane enhancers, is not recommended. Most of**

(Continued)

CAUTION! *(Continued)*

these products contain high concentrations of methanol. Fuel system damage or vehicle performance problems resulting from the use of such fuels or additives is not the responsibility of the manufacturer and may void or not be covered under the New Vehicle Limited Warranty.

NOTE: Intentional tampering with the emissions control system can result in civil penalties being assessed against you.

Carbon Monoxide Warnings

WARNING!

Carbon monoxide (CO) in exhaust gases is deadly. Follow the precautions below to prevent carbon monoxide poisoning:

- **Do not inhale exhaust gases. They contain carbon monoxide, a colorless and odorless gas, which can kill. Never run the engine in a closed area, such as a garage, and never sit in a parked vehicle with the engine running for an extended period. If the vehicle is stopped in an open area with the engine running for more than a short period, adjust the ventilation system to force fresh, outside air into the vehicle.**
- **Guard against carbon monoxide with proper maintenance. Have the exhaust system inspected every time the vehicle is raised. Have any abnormal conditions repaired promptly. Until repaired, drive with all side windows fully open.**

FLUID CAPACITIES

	U.S.	Metric
Fuel (Approximate)		
Two Door Models	18.6 Gallons	70 Liters
Four Door Models	22.5 Gallons	85 Liters
Engine Oil with Filter		
3.6L Engine	6 Quarts	5.6 Liters
Cooling System *		
3.6L Engine (Mopar Antifreeze/ Engine Coolant 10 Year/150,000 Mile Formula or equivalent)	10.5 Quarts	9.9 Liters
* Includes coolant recovery bottle filled to MAX level.		

FLUIDS AND LUBRICANTS

Engine

Component	Fluid, Lubricant, or Genuine Part
Engine Coolant	We recommend you use Mopar Antifreeze/Coolant 10 Year/150,000 Mile Formula OAT (Organic Additive Technology) or equivalent meeting the requirements of FCA Material Standard MS.90032.
Engine Oil	We recommend you use API Certified SAE 5W-20 Engine Oil, meeting the requirements of FCA Material Standard MS-6395 such as Mopar, Pennzoil, and Shell Helix. Refer to your engine oil filler cap for correct SAE grade.
Engine Oil Filter	We recommend you use Mopar Engine Oil Filter or equivalent.
Spark Plugs	We recommend you use Mopar Spark Plugs.
Fuel Selection	87 Octane, 0-15% Ethanol.

CAUTION!

- **Mixing of engine coolant (antifreeze) other than specified Organic Additive Technology (OAT) engine coolant (antifreeze), may result in engine damage and may decrease corrosion protection. Organic**

(Continued)

CAUTION! ***(Continued)***

Additive Technology (OAT) engine coolant is different and should not be mixed with Hybrid Organic

(Continued)

CAUTION! *(Continued)*

Additive Technology (HOAT) engine coolant (antifreeze) or any "globally compatible" coolant (antifreeze). If a non-OAT engine coolant (antifreeze) is introduced into the cooling system in an emergency, the cooling system will need to be drained, flushed, and refilled with fresh OAT coolant (conforming to MS.90032), by an authorized dealer as soon as possible.

(Continued)

CAUTION! *(Continued)*

- **Do not use water alone or alcohol-based engine coolant (antifreeze) products. Do not use additional rust inhibitors or antirust products, as they may not be compatible with the radiator engine coolant and may plug the radiator.**
- **This vehicle has not been designed for use with propylene glycol-based engine coolant (antifreeze). Use of propylene glycol-based engine coolant (antifreeze) is not recommended.**

Chassis

Component	Fluid, Lubricant, or Genuine Part
Automatic Transmission – If Equipped	Use only ATF+4 Automatic Transmission Fluid. Failure to use ATF+4 fluid may affect the function or performance of your transmission. We recommend Mopar ATF+4 fluid.
Manual Transmission – If Equipped	We recommend you use Mopar Manual Transmission Lubricant meeting the requirements of FCA Material Standard MS-9224.

Component	Fluid, Lubricant, or Genuine Part
Transfer Case	We recommend you use Mopar ATF+4 Automatic Transmission Fluid.
Axle Differential (Front)	We recommend you use Mopar Gear & Axle Lubricant (SAE 80W-90) (API GL-5).
Axle Differential (Rear)	**226 RBI (Model 44)** – We recommend you use Mopar Gear & Axle Lubricant (SAE 80W-90) (API GL-5) or equivalent. For trailer towing, use Mopar Synthetic Gear & Axle Lubricant (SAE 75W-140). Models equipped with Trac-Lok require an additive.
Brake Master Cylinder	We recommend you use Mopar DOT 3 Brake Fluid, SAE J1703. If DOT 3, SAE J1703 brake fluid is not available, then DOT 4 is acceptable.
Power Steering Reservoir	We recommend you use Mopar Power Steering Fluid +4, Mopar ATF+4 Automatic Transmission Fluid.

MULTIMEDIA

CONTENTS

■ RADIO 130 439

□ Operating Instructions — Radio Mode 439

□ Operation Instructions — CD MODE For CD And MP3 Audio Play. 441

□ Notes On Playing MP3 Files 443

□ Operation Instructions — Auxiliary Mode 445

■ RADIO 130 WITH SATELLITE RADIO 445

□ Operating Instructions — Radio Mode 445

□ Operation Instructions — CD MODE For CD And MP3 Audio Play. 450

□ Notes On Playing MP3 Files 451

□ LIST Button — CD Mode For MP3 Play 453

□ INFO Button — CD Mode For MP3 Play 454

□ Uconnect (Satellite Radio) — If Equipped 454

□ Operating Instructions — Uconnect (Satellite) Mode 456

□ Operating Instructions (Uconnect Phone) — If Equipped 457

■ RADIO 430/430N CD/DVD/HDD/NAV — IF EQUIPPED 457

□ Operating Instructions (Voice Command System) — If Equipped 457

□ Operating Instructions (Uconnect Phone) — If Equipped 458

□ Accessibility — If Equipped 458

■ CYBERSECURITY 458

■ STEERING WHEEL AUDIO CONTROLS 459

□ Radio Operation. 460

□ CD Player 460

■ AUX/USB/MP3 CONTROL — IF EQUIPPED . . .460

■ UCONNECT PHONE — IF EQUIPPED 461
- Operation 463
- Help Command 463
- Cancel Command. 463
- Pair (Link) Uconnect Phone To A Mobile Phone .464
- Dial By Saying A Number. 464
- Call By Saying A Name 465
- Phonebook Download – Automatic Phonebook Transfer From Mobile Phone 465
- Add Names To Your Uconnect Phonebook 466
- Edit Uconnect Phonebook Entries 466
- Delete Uconnect Phonebook Entry 467
- Delete/Erase “All” Uconnect Phonebook Entries .468
- List All Names In The Uconnect Phonebook 468
- Phone Call Features 468
- Uconnect Phone Features 471
- Advanced Phone Connectivity 474
- Things You Should Know About Your Uconnect Phone 476
- General Information 484

■ RADIO OPERATION AND MOBILE PHONES . . .484
- Regulatory And Safety Information 484

■ VOICE COMMAND — IF EQUIPPED 486
- Voice Command System Operation 486
- Commands 487
- Voice Training 490

■ CD/DVD DISC MAINTENANCE 490

RADIO 130

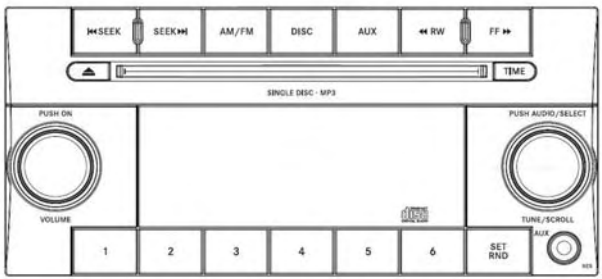

042305232

Radio 130

Operating Instructions — Radio Mode

NOTE: The ignition switch must be in the ON/RUN or ACC position to operate the radio.

Power Switch/Volume Control (Rotary)

Push the ON/VOLUME control knob to turn on the radio. Push the ON/VOLUME control knob a second time to turn off the radio.

Electronic Volume Control

The electronic volume control turns continuously (360 degrees) in either direction, without stopping. Turning the ON/VOLUME control knob to the right increases the volume, and to the left decreases it.

When the audio system is turned on, the sound will be set at the same volume level as last played.

SEEK Buttons

Push and release the SEEK buttons to search for the next listenable station in AM/FM mode. Push the right switch to seek up and the left switch to seek down. The radio will remain tuned to the new station until you make another selection. Holding either button will bypass stations without stopping, until you release it.

TIME Button

Push the TIME button to alternate display of the time and radio frequency.

Clock Setting Procedure

1. Push and hold the TIME button until the hours blink.
2. Adjust the hours by turning the right side TUNE/SCROLL control knob.

3. After adjusting the hours, push the right side TUNE/SCROLL control knob to set the minutes. The minutes will begin to blink.
4. Adjust the minutes using the right side TUNE/SCROLL control knob. Push the TUNE/SCROLL control knob to save time change.
5. To exit, push any button/knob, or wait five seconds.

RW/FF

Pushing the RW (Rewind) or FF (Fast Forward) buttons causes the tuner to search for the next frequency in the direction of the arrows. This feature operates in either AM or FM frequencies.

TUNE Control

Turn the rotary TUNE/SCROLL control knob clockwise to increase or counterclockwise to decrease the frequency.

Setting The Tone, Balance And Fade

Push the rotary TUNE/SCROLL control knob and BASS will display. Turn the TUNE/SCROLL control knob to the right or left to increase or decrease the bass tones.

Push the rotary TUNE/SCROLL control knob a second time and MID will display. Turn the TUNE/SCROLL control knob to the right or left to increase or decrease the mid-range tones.

Push the rotary TUNE/SCROLL control knob a third time and TREBLE will display. Turn the TUNE/SCROLL control knob to the right or left to increase or decrease the treble tones.

Push the rotary TUNE/SCROLL control knob a fourth time and BALANCE will display. Turn the TUNE/SCROLL control knob to the right or left to adjust the sound level from the right or left side speakers.

Push the rotary TUNE/SCROLL control knob a fifth time and FADE will display. Turn the TUNE/SCROLL control knob to the left or right to adjust the sound level between the front and rear speakers.

Push the rotary TUNE/SCROLL control knob again to exit setting tone, balance, and fade.

AM/FM Button

Push the buttons to select either AM or FM mode.

SET/RND Button — To Set The Pushbutton Memory

When you are receiving a station that you wish to commit to pushbutton memory, push the SET/RND button. The symbol SET 1 will now show in the display window. Select the button (1 to 6) you wish to lock onto this station and push and release that button. If a button is not selected within five seconds after pushing the SET/RND button, the station will continue to play but will not be stored into pushbutton memory.

You may add a second station to each pushbutton by repeating the above procedure with this exception: Push the SET/RND button twice and SET 2 will show in the display window. Each button can be set for SET 1 and SET 2 in both AM and FM. This allows a total of 12 AM and 12 FM stations to be stored into pushbutton memory. The stations stored in SET 2 memory can be selected by pushing the pushbutton twice.

Every time a preset button is used, a corresponding button number will display.

Buttons 1 - 6

These buttons tune the radio to the stations that you commit to pushbutton memory (12 AM and 12 FM stations).

DISC Button

Pushing the DISC button will allow you to switch from AM/FM modes to Disc modes.

Operation Instructions — CD MODE For CD And MP3 Audio Play

NOTE:

- The ignition switch must be in the ON/RUN or ACC position to operate the radio.
- This radio is capable of playing compact discs (CD), recordable compact discs (CD-R), rewritable compact discs (CD-RW), compact discs with MP3 tracks and multisession compact discs with CD and MP3 tracks.

Inserting Compact Disc(s)

Gently insert one CD into the CD player with the CD label facing up. The CD will automatically be pulled into the CD player and the CD icon will illuminate on the radio display. If a CD does not go into the slot more than 1.0 inch (2.5 cm), a disc may already be loaded and must be ejected before a new disc can be loaded.

If you insert a disc with the ignition ON/RUN and the radio ON, the unit will switch from radio to CD mode and begin to play when you insert the disc. The display will

show the track number, and index time in minutes and seconds. Play will begin at the start of track 1.

CAUTION!

- **This CD player will accept 4–3/4 inch (12 cm) discs only. The use of other sized discs may damage the CD player mechanism.**
- **Do not use adhesive labels. These labels can peel away and jam the player mechanism.**
- **The Radio 130 is a single CD player. Do not attempt to insert a second CD if one is already loaded.**
- **Dual-media disc types (one side is a DVD, the other side is a CD) should not be used, and they can cause damage to the player.**

EJECT Button — Ejecting A CD

Push the EJECT button to eject the CD.

If you have ejected a disc and have not removed it within ten seconds, it will be reloaded. If the CD is not removed, the radio will reinsert the CD but will not play it.

A disc can be ejected with the radio and ignition OFF.

NOTE: Ejecting with the ignition OFF is not allowed on convertible or soft-top models (if equipped.)

SEEK Button

Push the right SEEK button for the next selection on the CD. Push the left SEEK button to return to the beginning of the current selection, or return to the beginning of the previous selection if the CD is within the first second of the current selection. Pushing and holding the SEEK button will allow faster scrolling through the tracks in CD and MP3 modes.

TIME Button

Push this button to change the display from a large CD playing time display to a small CD playing time display.

RW/FF

Push and hold the FF (Fast Forward) button and the CD player will begin to fast forward until FF is released, or RW or another CD button is pushed. The RW (Reverse) button operates in a similar manner.

AM/FM Button

Push the button to select either AM or FM mode.

SET/RND Button (Random Play Button)

Push this button while the CD is playing to activate Random Play. This feature plays the selections on the compact disc in random order to provide an interesting change of pace.

Push the right SEEK button to move to the next randomly selected track.

Push the RND button a second time to stop Random Play.

Notes On Playing MP3 Files

The radio can play MP3 files; however, acceptable MP3 file recording media and formats are limited. When writing MP3 files, pay attention to the following restrictions.

Supported Media (Disc Types)

The MP3 file recording media supported by the radio are CDDA, CD-R, CD-RW, MP3, and CDDA+MP3.

Supported Medium Formats (File Systems)

The medium formats supported by the radio are ISO 9660 Level 1 and Level 2 and includes the Joliet extension. When reading discs recorded using formats other than ISO 9660 Level 1 and Level 2, the radio may fail to read files properly and may be unable to play the file normally. UDF and Apple HFS formats are not supported.

The radio uses the following limits for file systems:

- Maximum number of folder levels: 8
- Maximum number of files: 255
- Maximum number of folders. (The radio display of file names and folder names is limited. For large numbers of files and/or folders, the radio may be unable to display the file name and folder name, and will assign a number instead. With a maximum number of files, exceeding 20 folders will result in this display. With 200 files, exceeding 50 folders will result in this display.)

Maximum number of characters in file/folder names:

- Level 1: 12 (including a separator "." and a three-character extension)
- Level 2: 31 (including a separator "." and a three-character extension)

Multi-session disc formats are supported by the radio. Multi-session discs may contain combinations of normal CD audio tracks and computer files (including MP3 files). Discs created with an option such as "keep disc open after

writing" are most likely multi-session discs. The use of multi-session for CD audio or MP3 playback may result in longer disc loading times.

Supported MP3 File Formats

The radio will recognize only files with the *.MP3 extension as MP3 files. Non-MP3 files named with the *.MP3 extension may cause playback problems. The radio is designed to recognize the file as an invalid MP3 and will not play the file.

When using the MP3 encoder to compress audio data to an MP3 file, the bit rate and sampling frequencies in the following table are supported. In addition, variable bit rates (VBR) are also supported. The majority of MP3 files use a 44.1 kHz sampling rate and a 192, 160, 128, 96 or VBR bit rate.

MPEG Specification	Sampling Frequency (kHz)	Bit Rate (kbps)
MPEG-1 Audio Layer 3	48, 44.1, 32	320, 256, 224, 192, 160, 128, 112, 96, 80, 64, 56, 48, 40, 32
MPEG-2 Audio Layer 3	24, 22.05, 16	160, 128, 144, 112, 96, 80, 64, 56, 48, 40, 32, 24, 16, 8

ID3 Tag information for artist, song title, and album title are supported for version 1 ID3 tags. ID3 version 2 is not supported by the radios.

Playlist files are not supported. MP3 Pro files are not supported.

Playback Of MP3 Files

When a medium containing MP3 data is loaded, the radio checks all files on the medium. If the medium contains a lot of folders or files, the radio will take more time to start playing the MP3 files.

Loading times for playback of MP3 files may be affected by the following:

- Media - CD-RW media may take longer to load than CD-R media
- Medium formats - Multisession discs may take longer to load than non-multisession discs

- Number of files and folders - Loading times will increase with more files and folders

To increase the speed of disc loading, it is recommended to use CD-R media and single-session discs. To create a single-session disc, enable the "Disc at Once" option before writing to the disc.

Operation Instructions — Auxiliary Mode

The auxiliary (AUX) jack is an audio input jack, which allows the user to plug in a portable device, such as an MP3 player, or iPod, and utilize the vehicle's audio system to amplify the source and play through the vehicle speakers.

Pushing the DISC/AUX button will change the mode to auxiliary device if the AUX jack is connected.

NOTE: The AUX device must be turned on and the device's volume set to proper level. If the AUX audio is not loud enough, turn the device's volume up. If the AUX audio sounds distorted, turn the device's volume down.

TIME Button (Auxiliary Mode)

Push this button to change the display to time of day. The time of day will display for five seconds (when ignition is OFF).

RADIO 130 WITH SATELLITE RADIO

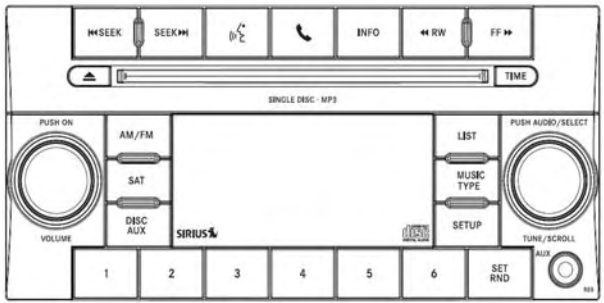

042340030

Radio 130

Operating Instructions — Radio Mode

NOTE: The ignition switch must be in the ON/RUN or ACC position to operate the radio.

Power Switch/Volume Control (Rotary)

Push the ON/VOLUME control knob to turn on the radio. Push the ON/VOLUME control knob a second time to turn off the radio.

Electronic Volume Control

The electronic volume control turns continuously (360 degrees) in either direction, without stopping. Turning the ON/VOLUME control knob to the right increases the volume, and to the left decreases it.

When the audio system is turned on, the sound will be set at the same volume level as last played.

SEEK Buttons

Push and release the SEEK buttons to search for the next listenable station in AM/FM mode. Push the right switch to seek up and the left switch to seek down. The radio will remain tuned to the new station until you make another selection. Holding either button will bypass stations without stopping, until you release it.

Voice Command System (Radio) — If Equipped

Refer to “Voice Command” in “Multimedia”.

Voice Command Button Uconnect Phone — If Equipped

Push this button to operate the Uconnect Phone feature (if equipped). Refer to “Uconnect Phone” in “Multimedia”.

If your vehicle is not equipped with or this feature is not available on your vehicle, a “Not Equipped With Uconnect Phone” message will display on the radio screen.

Phone Button Uconnect Phone — If Equipped

Push this button to operate the Uconnect Phone feature (if equipped). Refer to “Uconnect Phone” in “Multimedia”.

If your vehicle is not equipped with, or this feature is not available on your vehicle, a “Not Equipped With Uconnect Phone” message will display on the radio screen.

TIME Button

Push the TIME button to alternate display of the time and radio frequency.

Clock Setting Procedure

1. Push and hold the TIME button until the hours blink.
2. Adjust the hours by turning the right side TUNE/SCROLL control knob.
3. After adjusting the hours, push the right side TUNE/SCROLL control knob to set the minutes. The minutes will begin to blink.

4. Adjust the minutes using the right side TUNE/SCROLL control knob. Push the TUNE/SCROLL control knob to save time change.
5. To exit, push any button/knob, or wait five seconds.

INFO Button

Push the INFO button for an RDS station (one with call letters displayed). The radio will return a Radio Text message broadcast from an FM station (FM mode only).

RW/FF

Pushing the RW (Rewind) or FF (Fast Forward) buttons causes the tuner to search for the next frequency in the direction of the arrows. This feature operates in either AM or FM frequencies.

TUNE Control

Turn the rotary TUNE/SCROLL control knob clockwise to increase or counterclockwise to decrease the frequency.

Setting The Tone, Balance And Fade

Push the rotary TUNE/SCROLL control knob and BASS will display. Turn the TUNE/SCROLL control knob to the right or left to increase or decrease the bass tones.

Push the rotary TUNE/SCROLL control knob a second time and MID will display. Turn the TUNE/SCROLL control knob to the right or left to increase or decrease the mid-range tones.

Push the rotary TUNE/SCROLL control knob a third time and TREBLE will display. Turn the TUNE/SCROLL control knob to the right or left to increase or decrease the treble tones.

Push the rotary TUNE/SCROLL control knob a fourth time and BALANCE will display. Turn the TUNE/SCROLL control knob to the right or left to adjust the sound level from the right or left side speakers.

Push the rotary TUNE/SCROLL control knob a fifth time and FADE will display. Turn the TUNE/SCROLL control knob to the left or right to adjust the sound level between the front and rear speakers.

Push the rotary TUNE/SCROLL control knob again to exit setting tone, balance, and fade.

MUSIC TYPE Button

Pushing this button once will turn on the Music Type mode for five seconds. Pushing the MUSIC TYPE button or turning the TUNE/SCROLL control knob within five seconds will allow the program format type to be selected. Many radio stations do not currently broadcast Music Type information.

Toggle the MUSIC TYPE button to select the following format types:

Program Type	16-Digit Character Display
No program type or undefined	None
Adult Hits	Adlt Hit
Classical	Classicl
Classic Rock	Cls Rock
College	College
Country	Country
Foreign Language	Language
Information	Inform
Jazz	Jazz
News	News
Nostalgia	Nostalga
Oldies	Oldies
Personality	Persnlty
Public	Public
Rhythm and Blues	R & B
Religious Music	Rel Musc
Religious Talk	Rel Talk
Rock	Rock
Soft	Soft
Soft Rock	Soft Rck
Soft Rhythm and Blues	Soft R&B
Sports	Sports
Talk	Talk
Top 40	Top 40
Weather	Weather

By pushing the SEEK button when the Music Type icon is displayed, the radio will be tuned to the next frequency station with the same selected Music Type name. The Music Type function only operates when in the FM mode.

If a preset button is activated while in the Music Type (Program Type) mode, the Music Type mode will be exited and the radio will tune to the preset station.

SETUP Button

Pushing the SETUP button allows you to select between the following items:

- **Set Clock** — Pushing the SELECT button will allow you to set the clock. Adjust the hours by turning the TUNE/SCROLL control knob. After adjusting the hours, push the TUNE/SCROLL control knob to set the minutes. The minutes will begin to blink. Adjust the minutes using the right side TUNE/SCROLL control knob. Push the TUNE/SCROLL control knob to save time change.

AM/FM Button

Push the buttons to select either AM or FM mode.

SET/RND Button — To Set The Pushbutton Memory

When you are receiving a station that you wish to commit to pushbutton memory, push the SET/RND button. The symbol SET 1 will now show in the display window. Select the button (1 to 6) you wish to lock onto this station and push and release that button. If a button is not selected within five seconds after pushing the SET/RND button, the station will continue to play but will not be stored into pushbutton memory.

You may add a second station to each pushbutton by repeating the above procedure with this exception: Push the SET/RND button twice and SET 2 will show in the display window. Each button can be set for SET 1 and SET 2 in both AM and FM. This allows a total of 12 AM and 12 FM stations to be stored into pushbutton memory. The stations stored in SET 2 memory can be selected by pushing the pushbutton twice.

Every time a preset button is used, a corresponding button number will display.

Buttons 1 - 6

These buttons tune the radio to the stations that you commit to pushbutton memory (12 AM and 12 FM stations).

DISC/AUX Button

Pushing the DISC/AUX button will allow you to switch from AM/FM modes to DISC/AUX mode.

Operation Instructions — CD MODE For CD And MP3 Audio Play

NOTE:

- The ignition switch must be in the ON/RUN or ACC position to operate the radio.
- This radio is capable of playing compact discs (CD), recordable compact discs (CD-R), rewritable compact discs (CD-RW), compact discs with MP3 tracks and multisession compact discs with CD and MP3 tracks.

Inserting Compact Disc(s)

Gently insert one CD into the CD player with the CD label facing up. The CD will automatically be pulled into the CD player and the CD icon will illuminate on the radio display. If a CD does not go into the slot more than 1.0 inch (2.5 cm), a disc may already be loaded and must be ejected before a new disc can be loaded.

If you insert a disc with the ignition ON/RUN and the radio ON, the unit will switch from radio to CD mode and begin to play when you insert the disc. The display will show the track number, and index time in minutes and seconds. Play will begin at the start of track 1.

CAUTION!

- **This CD player will accept 4–3/4 inch (12 cm) discs only. The use of other sized discs may damage the CD player mechanism.**
- **Do not use adhesive labels. These labels can peel away and jam the player mechanism.**
- **The Radio 130 is a single CD player. Do not attempt to insert a second CD if one is already loaded.**
- **Dual-media disc types (one side is a DVD, the other side is a CD) should not be used, and they can cause damage to the player.**

EJECT Button — Ejecting A CD

Push the EJECT button to eject the CD.

If you have ejected a disc and have not removed it within ten seconds, it will be reloaded. If the CD is not removed, the radio will reinsert the CD but will not play it.

A disc can be ejected with the radio and ignition OFF.

NOTE: Ejecting with the ignition OFF is not allowed on convertible or soft-top models (if equipped.)

SEEK Button

Push the right SEEK button for the next selection on the CD. Push the left SEEK button to return to the beginning of the current selection, or return to the beginning of the previous selection if the CD is within the first second of the current selection. Pushing and holding the SEEK button will allow faster scrolling through the tracks in CD and MP3 modes.

TIME Button

Push this button to change the display from a large CD playing time display to a small CD playing time display.

RW/FF

Push and hold the FF (Fast Forward) button and the CD player will begin to fast forward until FF is released, or RW or another CD button is pushed. The RW (Reverse) button operates in a similar manner.

AM/FM Button

Push the button to select either AM or FM mode.

SET/RND Button (Random Play Button)

Push this button while the CD is playing to activate Random Play. This feature plays the selections on the compact disc in random order to provide an interesting change of pace.

Push the right SEEK button to move to the next randomly selected track.

Push the RND button a second time to stop Random Play.

Notes On Playing MP3 Files

The radio can play MP3 files; however, acceptable MP3 file recording media and formats are limited. When writing MP3 files, pay attention to the following restrictions.

Supported Media (Disc Types)

The MP3 file recording media supported by the radio are CDDA, CD-R, CD-RW, MP3, and CDDA+MP3.

Supported Medium Formats (File Systems)

The medium formats supported by the radio are ISO 9660 Level 1 and Level 2 and includes the Joliet extension. When reading discs recorded using formats other than ISO 9660

Level 1 and Level 2, the radio may fail to read files properly and may be unable to play the file normally. UDF and Apple HFS formats are not supported.

The radio uses the following limits for file systems:

- Maximum number of folder levels: 8
- Maximum number of files: 255
- Maximum number of folders. (The radio display of file names and folder names is limited. For large numbers of files and/or folders, the radio may be unable to display the file name and folder name, and will assign a number instead. With a maximum number of files, exceeding 20 folders will result in this display. With 200 files, exceeding 50 folders will result in this display.)

Maximum number of characters in file/folder names:

- Level 1: 12 (including a separator "." and a three-character extension)
- Level 2: 31 (including a separator "." and a three-character extension)

Multi-session disc formats are supported by the radio. Multi-session discs may contain combinations of normal CD audio tracks and computer files (including MP3 files). Discs created with an option such as "keep disc open after writing" are most likely multi-session discs. The use of multi-session for CD audio or MP3 playback may result in longer disc loading times.

Supported MP3 File Formats

The radio will recognize only files with the *.MP3 extension as MP3 files. Non-MP3 files named with the *.MP3 extension may cause playback problems. The radio is designed to recognize the file as an invalid MP3 and will not play the file.

When using the MP3 encoder to compress audio data to an MP3 file, the bit rate and sampling frequencies in the following table are supported. In addition, variable bit rates (VBR) are also supported. The majority of MP3 files use a 44.1 kHz sampling rate and a 192, 160, 128, 96 or VBR bit rate.

MPEG Specification	Sampling Frequency (kHz)	Bit Rate (kbps)
MPEG-1 Audio Layer 3	48, 44.1, 32	320, 256, 224, 192, 160, 128, 112, 96, 80, 64, 56, 48, 40, 32
MPEG-2 Audio Layer 3	24, 22.05, 16	160, 128, 144, 112, 96, 80, 64, 56, 48, 40, 32, 24, 16, 8

ID3 Tag information for artist, song title, and album title are supported for version 1 ID3 tags. ID3 version 2 is not supported by the radios.

Playlist files are not supported. MP3 Pro files are not supported.

Playback Of MP3 Files

When a medium containing MP3 data is loaded, the radio checks all files on the medium. If the medium contains a lot of folders or files, the radio will take more time to start playing the MP3 files.

Loading times for playback of MP3 files may be affected by the following:

- Media - CD-RW media may take longer to load than CD-R media
- Medium formats - Multisession discs may take longer to load than non-multisession discs
- Number of files and folders - Loading times will increase with more files and folders

To increase the speed of disc loading, it is recommended to use CD-R media and single-session discs. To create a single-session disc, enable the “Disc at Once” option before writing to the disc.

LIST Button — CD Mode For MP3 Play

Pushing the LIST button will bring up a list of all folders on the disc. Scrolling up or down the list is done by turning the TUNE/SCROLL control knob. Selecting a folder by pushing the TUNE/SCROLL control knob will begin playing the files contained in that folder (or the next folder in sequence if the selection does not contain playable files).

The folder list will time out after five seconds.

INFO Button — CD Mode For MP3 Play

Pushing the INFO button repeatedly will scroll through the following TAG information: Song Title, Artist, File Name, and Folder Name (if available).

Push the INFO button once more to return to ″elapsed time″ priority mode.

Push and hold the INFO button for three seconds or more and the radio will display song titles for each file.

Push and hold the INFO button again for three seconds to return to ″elapsed time″ display.

Operation Instructions — Auxiliary Mode

The auxiliary (AUX) jack is an audio input jack which allows the user to plug in a portable device such as an MP3 player and utilize the vehicle's audio system to amplify the source and play through the vehicle speakers.

Pushing the AUX button will change the mode to auxiliary device if the AUX jack is connected.

NOTE: The AUX device must be turned on and the device's volume set to the proper level. If the AUX audio is not loud enough, turn the device's volume up. If the AUX audio sounds distorted, turn the device's volume down.

TIME Button (Auxiliary Mode)

Push this button to change the display to time of day. The time of day will display for five seconds (when the ignition is OFF).

Uconnect (Satellite Radio) — If Equipped

Satellite radio uses direct satellite-to-receiver broadcasting technology to provide clear digital sound, coast to coast. The subscription service provider is Sirius Satellite Radio. This service offers over 130 channels of music, sports, news, entertainment, and programming for children, directly from its satellites and broadcasting studios.

NOTE: Sirius service is not available in Hawaii and has limited coverage in Alaska.

System Activation

Sirius Satellite Radio service is pre-activated, and you may begin listening immediately to the one year of audio service that is included with the factory-installed satellite radio system in your vehicle. Sirius will supply a welcome kit that contains general information, including how to setup your online listening account. For further information, call the toll-free number 888-539-7474, or visit the Sirius web site at www.siriusxm.com, or at www.siriusxm.ca for Canadian residents.

Electronic Serial Number/Sirius Identification Number (ESN/SID)

Please have the following information available when calling:

1. The Electronic Serial Number/Sirius Identification Number (ESN/SID).
2. Your Vehicle Identification Number.

To access the ESN/SID, refer to the following steps:

ESN/SID Access

With the ignition switch in the ON/RUN or ACC position and the radio on, push the SETUP button and scroll using the TUNE/SCROLL control knob until Sirius ID is selected. Push the TUNE/SCROLL control knob and the Sirius ID number will display. The Sirius ID number display will time out in two minutes. Push any button on the radio to exit this screen.

Selecting Uconnect (Satellite) Mode

Push the SAT button until "SAT" appears in the display. A CD may remain in the radio while in the Satellite radio mode.

Satellite Antenna

To ensure optimum reception, do not place items on the roof around the rooftop antenna location. Metal objects placed within the line of sight of the antenna will cause decreased performance. Larger luggage items such as bikes should be placed as far rearward as possible, within the loading design of the rack. Do not place items directly on or above the antenna.

Reception Quality

Satellite reception may be interrupted due to one of the following reasons:

- The vehicle is parked in an underground parking structure or under a physical obstacle.
- Dense tree coverage may interrupt reception in the form of short audio mutes.
- Driving under wide bridges or along tall buildings can cause intermittent reception.
- Placing objects over or too close to the antenna can cause signal blockage.

Operating Instructions — Uconnect (Satellite) Mode

NOTE: The ignition switch must be in the ON/RUN or ACC position to operate the radio.

SEEK Buttons

Push and release the SEEK buttons to search for the next listenable station in AM/FM mode. Push the right switch to seek up and the left switch to seek down. The radio will remain tuned to the new station until you make another selection. Holding either button will bypass stations without stopping, until you release it.

SCAN Button

Pushing the SCAN button causes the tuner to search for the next channel, pausing for eight seconds before continuing to the next. To stop the search, push the SCAN button a second time.

INFO Button

Pushing the INFO button will cycle the display information between Artist, Song Title, and Composer (if available). Also, pushing and holding the INFO button for an additional three seconds will make the radio display the Song Title all of the time (push and hold again to return to normal display).

RW/FF

Pushing the RW (Rewind) or FF (Fast Forward) buttons causes the tuner to search for the next channel in the direction of the arrows.

TUNE Control

Turn the rotary TUNE/SCROLL control knob clockwise to increase or counterclockwise to decrease the frequency.

MUSIC TYPE Button

Pushing this button once will turn on the Music Type mode for five seconds. Pushing the MUSIC TYPE button or turning the TUNE/SCROLL control knob within five seconds will allow the program format type to be selected.

Toggle the MUSIC TYPE button again to select the music type.

By pushing the SEEK button when the Music Type function is active, the radio will be tuned to the next channel with the same selected Music Type name.

If a preset button is activated while in the Music Type (Program Type) mode, the Music Type mode will be exited and the radio will tune to the preset channel.

SETUP Button

Pushing the SETUP button allows you to select the following items:

- Display Sirius ID number — Push the AUDIO/SELECT button to display the Sirius ID number. This number is used to activate, deactivate, or change the Sirius subscription.

SET Button — To Set The Pushbutton Memory

When you are receiving a channel that you wish to commit to push button memory, push the SET button. The symbol SET 1 will now show in the display window. Select the button (1-6) you wish to lock onto this channel and push and release that button. If a button is not selected within five seconds after pushing the SET button, the channel will continue to play but will not be stored into push button memory.

You may add a second channel to each push button by repeating the above procedure with this exception: Push the SET button twice and SET 2 will show in the display window. Each button can be set for SET 1 and SET 2. This allows a total of 12 Satellite channels to be stored into push button memory. The channels stored in SET 2 memory can be selected by pushing the push button twice.

Every time a preset button is used, a corresponding button number will display.

Buttons 1 - 6

These buttons tune the radio to the channels that you commit to pushbutton memory (12 Satellite stations).

Operating Instructions (Uconnect Phone) — If Equipped

Refer to “Uconnect Phone” in “Multimedia”.

RADIO 430/430N CD/DVD/HDD/NAV — IF EQUIPPED

Refer to your Uconnect Owner’s Manual Supplement for detailed operating instructions.

Operating Instructions (Voice Command System) — If Equipped

Refer to “Voice Command” in “Multimedia” for further details.

Operating Instructions (Uconnect Phone) — If Equipped

Refer to "Uconnect Phone" in "Multimedia" for further details.

Accessibility — If Equipped

The accessibility feature announces DVD functions prior to performing them. For example, when activated, the accessibility feature will announce that the "Play" button was pressed the first time the "Play" button is pressed, and the second time the "Play" button is pressed it will perform the "Play" function. The accessibility feature can be turned on and off in the settings of the radio.

CYBERSECURITY

Your vehicle may be a connected vehicle and may be equipped with both wired and wireless networks. These networks allow your vehicle to send and receive information. This information allows systems and features in your vehicle to function properly.

Your vehicle may be equipped with certain security features to reduce the risk of unauthorized and unlawful access to vehicle systems and wireless communications. Vehicle software technology continues to evolve over time and FCA US LLC, working with its suppliers, evaluates and takes appropriate steps as needed. Similar to a computer or other devices, your vehicle may require software updates to improve the usability and performance of your systems or to reduce the potential risk of unauthorized and unlawful access to your vehicle systems.

The risk of unauthorized and unlawful access to your vehicle systems may still exist, even if the most recent version of vehicle software (such as Uconnect software) is installed.

WARNING!

- **It is not possible to know or to predict all of the possible outcomes if your vehicle's systems are breached. It may be possible that vehicle systems, including safety related systems, could be impaired or a loss of vehicle control could occur that may result in an accident involving serious injury or death.**
- **ONLY insert media (e.g., USB, SD card, or CD) into your vehicle if it came from a trusted source. Media of unknown origin could possibly contain malicious software, and if installed in your vehicle, it may**

(Continued)

WARNING! *(Continued)*

increase the possibility for vehicle systems to be breached.

- **As always, if you experience unusual vehicle behavior, take your vehicle to your nearest authorized dealer immediately.**

NOTE:

- FCA or your dealer may contact you directly regarding software updates.
- To help further improve vehicle security and minimize the potential risk of a security breach, vehicle owners should:
  - Routinely check www.driveuconnect.com/software-update (U.S. Residents) or www.driveuconnect.ca/software-update (Canadian Residents) to learn about available Uconnect software updates.
  - Only connect and use trusted media devices (e.g. personal mobile phones, USBs, CDs).

Privacy of any wireless and wired communications cannot be assured. Third parties may unlawfully intercept information and private communications without your consent.

For further information, refer to "Onboard Diagnostic System (OBD II) Cybersecurity" in "Getting To Know Your Instrument Panel".

STEERING WHEEL AUDIO CONTROLS

The remote sound system controls are located on the rear surface of the steering wheel. Reach behind the wheel to access the switches.

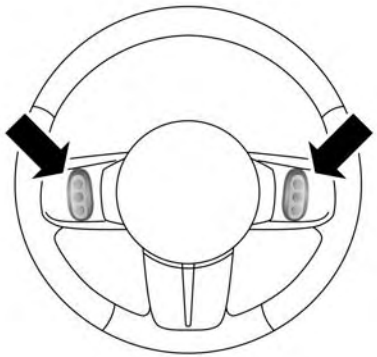

Remote Sound System Controls (Back View Of Steering Wheel)

The right-hand control is a rocker-type switch with a push-button in the center and controls the volume and mode of the sound system. Pushing the top of the rocker switch will increase the volume, and pushing the bottom of the rocker switch will decrease the volume.

Pushing the center button will make the radio switch between the various modes available (AM/FM/SAT/CD/HDD/AUX, etc.).

The left-hand control is a rocker-type switch with a push-button in the center. The function of the left-hand control is different depending on which mode you are in.

The following describes the left-hand control operation in each mode.

Radio Operation

Pushing the top of the switch will “Seek” up for the next listenable station and pushing the bottom of the switch will “Seek” down for the next listenable station.

The button located in the center of the left-hand control will tune to the next preset station that you have programmed in the radio preset button.

CD Player

Pushing the top of the switch once will go to the next track on the CD. Pushing the bottom of the switch once will go to the beginning of the current track, or to the beginning of the previous track if it is within eight seconds after the current track begins to play.

If you push the switch up or down twice, it plays the second track; three times, it will play the third, etc.

The center button on the left side rocker switch has no function for a single-disc CD player. However, when a multiple-disc CD player is equipped on the vehicle, the center button will select the next available CD in the player.

AUX/USB/MP3 CONTROL — IF EQUIPPED

This feature allows an external USB device to be plugged into the USB port, located in the center console.

Connecting an electronic audio device to the AUX port located in the radio faceplate plays media, but does not use the control feature to control the connected device.

If the radio has a USB port, refer to your User Guide or the appropriate Uconnect Owner’s Manual Supplement for external USB device support capability.

WARNING!

Do not plug in or remove the iPod or external device while driving. Failure to follow this warning could result in a collision.

UCONNECT PHONE — IF EQUIPPED

Uconnect Phone is a voice-activated, hands-free, in-vehicle communications system. Uconnect Phone allows you to dial a phone number with your mobile phone* using simple voice commands (e.g., "Call" ... "Mike" ... "Work" or "Dial" ... "248-555-1212"). Your mobile phone's audio is transmitted through your vehicle's audio system; the system will automatically mute your radio when using the Uconnect Phone.

NOTE: The Uconnect Phone requires a mobile phone equipped with the Bluetooth "Hands-Free Profile," Version 0.96 or higher. See the Uconnect website for supported phones. For Uconnect customer support:

- U.S. residents - visit UconnectPhone.com or call 1-877-855-8400 (24 hours a day 7 days a week).
- Canadian Residents - visit UconnectPhone.com or call 1-800-465-2001 (English) or 1-800-387-9983 (French).
- Mon. – Fri., 8:00 am – 8:00 pm, ET
- Sat., 9:00 am – 5:00 pm, ET
- Sun., Closed

Uconnect Phone allows you to transfer calls between the system and your mobile phone as you enter or exit your vehicle and enables you to mute the system's microphone for private conversation.

The Uconnect Phone is driven through your Bluetooth "Hands-Free Profile" mobile phone. Uconnect features Bluetooth technology - the global standard that enables different electronic devices to connect to each other without wires or a docking station, so Uconnect Phone works no matter where you stow your mobile phone (be it your purse, pocket, or briefcase), as long as your phone is turned on and has been paired to the vehicle's Uconnect Phone. The Uconnect Phone allows up to seven mobile phones to be linked to the system. Only one linked (or paired) mobile phone can be used with the system at a time. The system is available in English, Spanish, or French languages.

WARNING!

ALWAYS drive safely with your hands on the wheel. You have full responsibility and assume all risks related to the use of the Uconnect features and applications in this vehicle. Only use Uconnect when it is safe to do so. Failure to do so may result in an accident involving serious injury or death.

Uconnect Phone Button

The radio or steering wheel controls (if equipped) will contain the two control buttons (Uconnect Phone button and Voice Command button) that will enable you to access the system. When you push the button you will hear the word Uconnect followed by a BEEP. The beep is your signal to give a command.

NOTE: The driver side upper windshield trim contains the microphone for the Uconnect Phone.

Voice Command Button

WARNING!

Any voice commanded system should be used only in safe driving conditions following all applicable laws. Your attention should be focused on safely operating the vehicle. Failure to do so may result in a collision causing serious injury or death.

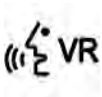

Actual button location may vary with the radio. The individual buttons are described in the “Operation” section.

The Uconnect Phone can be used with any Hands-Free Profile certified Bluetooth mobile phone. See the Uconnect website for supported phones. Refer to your mobile service provider or the phone manufacturer for details.

The Uconnect Phone is fully integrated with the vehicle’s audio system. The volume of the Uconnect Phone can be adjusted either from the radio volume control knob or from the steering wheel radio control (right switch), if so equipped.

The radio display will be used for visual prompts from the Uconnect Phone such as “CELL” or caller ID on certain radios.

Operation

Voice commands can be used to operate the Uconnect Phone and to navigate through the Uconnect Phone menu structure. Voice commands are required after most Uconnect Phone prompts. You will be prompted for a specific command and then guided through the available options.

- Prior to giving a voice command, one must wait for the beep, which follows the "Ready" prompt or another prompt.
- For certain operations, compound commands can be used. For example, instead of saying "Setup" and then "Phone Pairing," the following compound command can be said: "Setup Phone Pairing."
- For each feature explanation in this section, only the compound form of the voice command is given. You can also break the commands into parts and say each part of the command when you are asked for it. For example, you can use the compound form voice command "Phonebook New Entry," or you can break the compound form command into two voice commands: "Phonebook" and "New Entry." Please remember, the Uconnect Phone works best when you talk in a normal conversational tone, as if speaking to someone sitting a few feet/meters away from you.

Voice Command Tree

Refer to "Voice Tree" in this section.

Help Command

If you need assistance at any prompt, or if you want to know your options at any prompt, say "Help" following the beep. The Uconnect Phone will play all the options at any prompt if you ask for help.

To activate the Uconnect Phone from idle, simply push the Phone button and follow the audible prompts for directions. All Uconnect Phone sessions begin with a push of the Phone button on the faceplate.

Cancel Command

At any prompt, after the beep, you can say "Cancel" and you will be returned to the main menu. However, in a few instances the system will take you back to the previous menu.

Pair (Link) Uconnect Phone To A Mobile Phone

To begin using your Uconnect Phone, you must pair your compatible Bluetooth enabled mobile phone.

To complete the pairing process, you will need to reference your mobile phone Owner's Manual. The Uconnect website may also provide detailed instructions for pairing.

The following are general phone to Uconnect Phone pairing instructions:

- Push the Phone button to begin.
- After the "Ready" prompt and the following beep, say "Setup Phone Pairing."
- When prompted, after the beep, say "Pair a Phone" and follow the audible prompts.
- You will be asked to say a four-digit Personal Identification Number (PIN), which you will later need to enter into your mobile phone. You can enter any four-digit PIN. You will not need to remember this PIN after the initial pairing process.
- For identification purposes, you will be prompted to give the Uconnect Phone a name for your mobile phone. Each mobile phone that is paired should be given a unique phone name.
- You will then be asked to give your mobile phone a priority level between one and seven, with one being the highest priority. You can pair up to seven mobile phones to your Uconnect Phone. However, at any given time, only one mobile phone can be in use, connected to your Uconnect System. The priority allows the Uconnect Phone to know which mobile phone to use if multiple mobile phones are in the vehicle at the same time. For example, if priority three and priority five phones are present in the vehicle, the Uconnect Phone will use the priority three mobile phone when you make a call. You can select to use a lower priority mobile phone at any time (refer to "Advanced Phone Connectivity" in this section).

Dial By Saying A Number

- Push the Phone button to begin.
- After the "Ready" prompt and the following beep, say "Dial."
- The system will prompt you to say the number you want to call.
- For example, you can say "234-567-8901."

- The Uconnect Phone will confirm the phone number and then dial. The number will appear in the display of certain radios.

Call By Saying A Name

- Push the Phone button to begin.
- After the "Ready" prompt and the following beep, say "Call."
- The system will prompt you to say the name of the person you want to call.
- After the "Ready" prompt and the following beep, say the name of the person you want to call. For example, you can say "John Doe," where John Doe is a previously stored name entry in the Uconnect phonebook or downloaded phonebook. To learn how to store a name in the phonebook, refer to "Add Names To Your Uconnect Phonebook," in this section.
- The Uconnect system will confirm the name and then dial the corresponding phone number, which may appear in the display of certain radios.

Phonebook Download – Automatic Phonebook Transfer From Mobile Phone

If equipped and specifically supported by your phone, Uconnect Phone automatically downloads names (text names) and number entries from your mobile phone's phonebook. Specific Bluetooth Phones with Phone Book Access Profile may support this feature. See Uconnect website for supported phones.

- To call a name from downloaded (or Uconnect) Phonebook, follow the procedure in "Call by Saying a Name" section.
- Automatic download and update, if supported, begins as soon as the Bluetooth wireless phone connection is made to the Uconnect Phone, for example, after you start the vehicle.
- A maximum of 1,000 entries per phone will be downloaded and updated every time a phone is connected to the Uconnect Phone.
- Depending on the maximum number of entries downloaded, there may be a short delay before the latest downloaded names can be used. Until then, if available, the previous downloaded phonebook is available for use.

- Only the phonebook of the currently connected mobile phone is accessible.
- Only the mobile phone's phonebook is downloaded. SIM card phonebook is not part of the Mobile phonebook.
- This downloaded phonebook cannot be edited or deleted on the Uconnect Phone. These can only be edited on the mobile phone. The changes are transferred and updated to Uconnect Phone on the next phone connection.

Add Names To Your Uconnect Phonebook

NOTE: Adding names to the Uconnect Phonebook is recommended when the vehicle is not in motion.

- Push the Phone button to begin.
- After the "Ready" prompt and the following beep, say "Phonebook New Entry."
- When prompted, say the name of the new entry. Use of long names helps the Voice Command and it is recommended. For example, say "Robert Smith" or "Robert" instead of "Bob."
- When prompted, enter the number designation (e.g., "Home," "Work," "Mobile," or "Other"). This will allow you to store multiple numbers for each phonebook entry, if desired.
- When prompted, recite the phone number for the phonebook entry that you are adding.

After you are finished adding an entry into the phonebook, you will be given the opportunity to add more phone numbers to the current entry or to return to the main menu.

The Uconnect Phone will allow you to enter up to 32 names in the phonebook with each name having up to four associated phone numbers and designations. Each language has a separate 32-name phonebook accessible only in that language. In addition, if equipped and supported by your phone, Uconnect Phone automatically downloads your mobile phone's phonebook.

Edit Uconnect Phonebook Entries

- Push the Phone button to begin.
- After the "Ready" prompt and the following beep, say "Phonebook Edit."
- You will then be asked for the name of the phonebook entry that you wish to edit.

- Next, choose the number designation (home, work, mobile, or other) that you wish to edit.
- When prompted, recite the new phone number for the phonebook entry that you are editing.

After you are finished editing an entry in the phonebook, you will be given the opportunity to edit another entry in the phonebook, call the number you just edited, or return to the main menu.

NOTE:

- Editing names in the phonebook is recommended when the vehicle is not in motion.
- Automatic downloaded phonebook entries cannot be deleted or edited.

"Phonebook Edit" can be used to add another phone number to a name entry that already exists in the phonebook. For example, the entry John Doe may have a mobile and a home number, but you can add "John Doe's" work number later using the "Phonebook Edit" feature.

Delete Uconnect Phonebook Entry

NOTE: Editing phonebook entries is recommended when the vehicle is not in motion.

To delete a Uconnect phonebook entry using Voice Commands:

1. Push the Phone button to begin.
2. After the "Ready" prompt and the following beep, say "Phonebook Delete."
3. After you enter the Phonebook Delete menu, you will then be asked for the name of the entry that you wish to delete. You can either say the name of a phonebook entry that you wish to delete, or you can say "List Names" to hear a list of the entries in the phonebook from which you choose. To select one of the entries from the list, push the Voice Command button while the Uconnect Phone is playing the desired entry and say "Delete."
4. After you enter the name, the Uconnect Phone will ask you which designation you wish to delete: home, work, mobile, other, or all. Say the designation you wish to delete.
   - Note that only the phonebook entry in the current language is deleted.

NOTE: Automatic downloaded phonebook entries cannot be deleted or edited.

Delete/Erase "All" Uconnect Phonebook Entries

NOTE:

- ONLY the phonebook in the current language is deleted.
- Automatic downloaded phonebook entries cannot be deleted or edited.

To delete or erase all Uconnect phonebook entries using Voice Command:

1. Push the Phone button to begin.
2. After the "Ready" prompt and the following beep, say "Phonebook Erase All."
   - The Uconnect Phone will ask you to verify that you wish to delete all the entries from the phonebook.
3. After confirmation, the phonebook entries will be deleted.

List All Names In The Uconnect Phonebook

- Push the Phone button to begin.
- After the "Ready" prompt and the following beep, say "Phonebook List Names."
- The Uconnect Phone will play the names of all the phonebook entries, including the downloaded phonebook entries, if available.
- To call one of the names in the list, push the Voice Command button during the playing of the desired name, and say "Call."

NOTE: The user can also exercise "Edit" or "Delete" operations at this point.

- The Uconnect Phone will then prompt you as to the number designation you wish to call.
- The selected number will be dialed.

Phone Call Features

The following features can be accessed through the Uconnect Phone if the feature(s) are available on your mobile service plan. For example, if your mobile service plan provides three-way calling, this feature can be accessed through the Uconnect Phone. Check with your mobile service provider for the features that you have.

Answer Or Reject An Incoming Call — No Call Currently In Progress

When you receive a call on your mobile phone, the Uconnect Phone will interrupt the vehicle audio system, if

on, and will ask if you would like to answer the call. Push the Phone button to accept the call. To reject the call, push and hold the Phone button until you hear a single beep, indicating that the incoming call was rejected.

Answer Or Reject An Incoming Call — Call Currently In Progress

If a call is currently in progress and you have another incoming call, you will hear the same network tones for call waiting that you normally hear when using your mobile phone. Push the Phone button to place the current call on hold and answer the incoming call.

NOTE: The Uconnect Phone compatible phones in the market today do not support rejecting an incoming call when another call is in progress. Therefore, the user can only answer an incoming call or ignore it.

Making A Second Call While Current Call Is In Progress

To make a second call while you are currently on a call, push the Voice Command button and say "Dial" or "Call" followed by the phone number or phonebook entry you wish to call. The first call will be on hold while the second call is in progress. To go back to the first call, refer to "Toggling Between Calls" in this section. To combine two calls, refer to "Conference Call" in this section.

Place/Retrieve A Call From Hold

To put a call on hold, push the Phone button until you hear a single beep. This indicates that the call is on hold. To bring the call back from hold, push and hold the Phone button until you hear a single beep.

Toggling Between Calls

If two calls are in progress (one active and one on hold), push the Phone button until you hear a single beep, indicating that the active and hold status of the two calls have switched. Only one call can be placed on hold at a time.

Conference Call

When two calls are in progress (one active and one on hold):

1. Push and hold the Phone button until you hear a double beep, indicating that the two calls have been joined into one conference call.

Three-Way Calling

To initiate three-way calling, push the Voice Command button while a call is in progress, and make a second phone call, as described under "Making a Second Call While Current Call is in Progress." After the second call has established, push and hold the Phone button until you hear a double beep, indicating that the two calls have been joined into one conference call.

Call Termination

To end a call in progress:

1. Momentarily push the Phone button.
   - Only the active call(s) will be terminated and if there is a call on hold, it will become the new active call. If the active call is terminated by the phone far end, a call on hold may not become active automatically. This is cell phone-dependent.
2. To bring the call back from hold, push and hold the Phone button until you hear a single beep.

Redial

To redial the last number called from your mobile phone using Voice Command:

1. Push the Phone button to begin.
2. After the "Ready" prompt and the following beep, say "Redial."
   - The Uconnect Phone will call the last number that was dialed from your mobile phone.

NOTE: This may not be the last number dialed from the Uconnect Phone.

Call Continuation

Call continuation is the progression of a phone call on the Uconnect Phone after the vehicle ignition has been switched to OFF. Call continuation functionality available on the vehicle can be any one of three types:

1. After the ignition is switched to OFF, a call can continue on the Uconnect Phone either until the call ends, or until the vehicle battery condition dictates cessation of the call on the Uconnect Phone and transfer of the call to the mobile phone.
2. After the ignition is cycled to OFF, a call can continue on the Uconnect Phone for a certain duration, after which the call is automatically transferred from the Uconnect Phone to the mobile phone.
3. An active call is automatically transferred to the mobile phone after the ignition is cycled to OFF.

Uconnect Phone Features

Language Selection

To change the language that the Uconnect Phone is using:

- Push the Phone button to begin.
- After the "Ready" prompt and the following beep, say the name of the language you wish to switch to English, Espanol, or Francais.
- Continue to follow the system prompts to complete the language selection.

After selecting one of the languages, all prompts and voice commands will be in that language.

NOTE: After every Uconnect Phone language change operation, only the language-specific 32-name phonebook is usable. The paired phone name is not language-specific and usable across all languages.

Emergency Assistance

If you are in an emergency and the mobile phone is reachable:

- Pick up the phone and manually dial the emergency number for your area.

If the phone is not reachable and the Uconnect Phone is operational, you may reach the emergency number as follows:

- Push the Phone button to begin.
- After the "Ready" prompt and the following beep, say "Emergency" and the Uconnect Phone will instruct the paired mobile phone to call the emergency number.

NOTE:

- The emergency number dialed is based on the country where the vehicle is purchased (911 for the U.S. and Canada and 060 for Mexico). The number dialed may not be applicable with the available mobile service and area.
- If supported, this number may be programmable on some systems. To do this, push the Phone button and say "Setup," followed by "Emergency."
- The Uconnect Phone does slightly lower your chances of successfully making a phone call as to that for the mobile phone directly.

WARNING!

To use your Uconnect Phone System in an emergency, your mobile phone must be:
- **Turned on.**
- **Paired to the Uconnect System.**
- **Have network coverage.**

Roadside Assistance/Towing Assistance

If you need roadside assistance:

- Push the Phone button to begin.
- After the "Ready" prompt and the following beep, say "Towing Assistance."

NOTE: You should program the desired Towing Assistance phone number using the Voice Command system. To do this, push the Phone button and say "Setup," followed by "Towing Assistance." When prompted say 1-800-521-2779 for U.S., 1-800-363-4869 for Canada, 55-14-3454 for Mexico City and 1-800-712-3040 for outside Mexico City in Mexico.

Paging

To learn how to page, refer to "Working With Automated Systems." Paging works properly except for pagers of certain companies, which time out a little too soon to work properly with the Uconnect Phone.

Voice Mail Calling

To learn how to access your voice mail, refer to "Working With Automated Systems."

Working With Automated Systems

This method is used in instances where one generally has to press numbers on the mobile phone keypad while navigating through an automated telephone system.

You can use your Uconnect Phone to access a voice mail system or an automated service, such as a paging service or automated customer service line. Some services require immediate response selection. In some instances, that may be too quick for use of the Uconnect Phone.

When calling a number with your Uconnect Phone that normally requires you to enter in a touch-tone sequence on your mobile phone keypad, you can push the Voice Command button and say the sequence you wish to enter, followed by the word "Send." For example, if required

to enter your PIN followed with a pound, (3 7 4 6 #), you can push the Voice Command button and say, "3 7 4 6 # Send." Saying a number, or sequence of numbers, followed by "Send," is also to be used for navigating through an automated customer service center menu structure, and to leave a number on a pager.

You can also send stored Uconnect Phonebook entries as tones for fast and easy access to voice mail and pager entries. To use this feature, dial the number you wish to call and then push the Voice Command button and say, "Send." The system will prompt you to enter the name or number and say the name of the phonebook entry you wish to send. The Uconnect Phone will then send the corresponding phone number associated with the phonebook entry, as tones over the phone.

NOTE:

- You may not hear all of the tones due to mobile phone network configurations. This is normal.
- Some paging and voice mail systems have system time out settings that are too short and may not allow the use of this feature.

Barge In – Overriding Prompts

The "Voice Command" button can be used when you wish to skip part of a prompt and issue your voice command immediately. For example, if a prompt is asking "Would you like to pair a phone, clear a...," you could push the Voice Command button and say, "Pair a Phone" to select that option without having to listen to the rest of the voice prompt.

Turning Confirmation Prompts On/Off

Turning confirmation prompts off will stop the system from confirming your choices (e.g., the Uconnect Phone will not repeat a phone number before you dial it).

To turn confirmation prompts on or off using Voice Command:

1. Push the Phone button to begin.
2. After the "Ready" prompt and the following beep, say:
   - "Setup Confirmations Prompts On"
   - "Setup Confirmations Prompts Off"

Phone And Network Status Indicators

If available on the radio and/or on a premium display such as the instrument panel cluster, and supported by your mobile phone, the Uconnect Phone will provide notification to inform you of your phone and network status when you are attempting to make a phone call using Uconnect Phone. The status is given for roaming, network signal strength, phone battery strength, etc.

Dialing Using The Mobile Phone Keypad

You can dial a phone number with your mobile phone keypad and still use the Uconnect Phone (while dialing via the mobile phone keypad, the user must exercise caution and take precautionary safety measures). By dialing a number with your paired Bluetooth mobile phone, the audio will be played through your vehicles audio system. The Uconnect Phone will work the same as if you dial the number using Voice Command.

NOTE: Certain brands of mobile phones do not send the dial ring to the Uconnect Phone to play it on the vehicle audio system, so you will not hear it. Under this situation, after successfully dialing a number the user may feel that the call did not go through even though the call is in progress. Once your call is answered, you will hear the audio.

Mute/Un-Mute (Mute ON/OFF)

When you mute the Uconnect Phone, you will still be able to hear the conversation coming from the other party, but the other party will not be able to hear you. To mute the Uconnect Phone:

- Push the Voice Command button.
- Following the beep, say “Mute.”

To un-mute the Uconnect Phone:

- Push the Voice Command button.
- Following the beep, say “Mute off.”

Advanced Phone Connectivity

Transfer Call To And From Mobile Phone

The Uconnect Phone allows ongoing calls to be transferred from your mobile phone to the Uconnect Phone without terminating the call. To transfer an ongoing call from your Uconnect Phone paired mobile phone to the Uconnect Phone or vice versa, push the Voice Command button and say “Transfer Call.”

Connect Or Disconnect Link Between The Uconnect Phone And Mobile Phone

Your mobile phone can be paired with many different electronic devices, but can only be actively "connected" with one electronic device at a time.

If you would like to connect or disconnect the Bluetooth connection between a Uconnect Phone paired mobile phone and the Uconnect Phone, follow the instructions described in your mobile phone user manual.

List Paired Mobile Phone Names

- Push the Phone button to begin.
- After the "Ready" prompt and the following beep, say "Setup Phone Pairing."
- When prompted, say "List Phones."
- The Uconnect Phone will play the phone names of all paired mobile phones in order from the highest to the lowest priority. To "Select" or "Delete" a paired phone being announced, push the Voice Command button and say "Select" or "Delete." Also, see the next two sections for an alternate way to "Select" or "Delete" a paired phone.

Select Another Mobile Phone

This feature allows you to select and start using another phone paired with the Uconnect Phone.

- Push the Phone button to begin.
- After the "Ready" prompt and the following beep, say "Setup Select Phone" and follow the prompts.
- You can also push the Voice Command button at any time while the list is being played, and then choose the phone that you wish to select.
- The selected phone will be used for the next phone call. If the selected phone is not available, the Uconnect Phone will return to using the highest priority phone present in or near (approximately within 30 ft (9 m) of the vehicle.

Delete Uconnect Phone Paired Mobile Phones

- Push the Phone button to begin.
- After the "Ready" prompt and the following beep, say "Setup Phone Pairing."
- At the next prompt, say "Delete" and follow the prompts.

- You can also push the Voice Command button at any time while the list is being played, and then choose the phone you wish to delete.

Things You Should Know About Your Uconnect Phone

Uconnect Phone Tutorial

To hear a brief tutorial of the system features, push the Phone button and say "Uconnect Tutorial."

Voice Training

For users experiencing difficulty with the system recognizing their voice commands or numbers, the Uconnect Phone Voice Training feature may be used. To enter this training mode, follow one of the two following procedures:

- From outside the Uconnect Phone mode (e.g., from radio mode), push and hold the Voice Command button for five seconds until the session begins, or,
- Push the Voice Command button and say the "Voice Training," "System Training," or "Start Voice Training" command.

You can either push the Uconnect Phone button to restore the factory setting or repeat the words and phrases when prompted by the Uconnect Phone. For best results, the Voice Training session should be completed when the vehicle is parked with the engine running, all windows closed, and the blower fan switched off.

This procedure may be repeated with a new user. The system will adapt to the last trained voice only.

Reset

To Reset all settings using Voice Command:

1. Push the Phone button.
2. After the "Ready" prompt and the following beep, say "Setup," then "Reset."
   - This will delete all phone pairing, phone book entries, and other settings in all language modes. The System will prompt you before resetting to factory settings.

Voice Command

For best performance:

- Adjust the rearview mirror to provide at least ½ inch (1 cm) gap between the overhead console (if equipped) and the mirror.
- Always wait for the beep before speaking.

- Speak normally without pausing, just as you would speak to a person sitting a few feet/meters away from you.
- Make sure that no one other than you is speaking during a Voice Command period.

Performance is maximized under:

- Low-to-medium blower setting
- Low-to-medium vehicle speed
- Low road noise
- Smooth road surface
- Fully closed windows
- Dry weather condition

NOTE:

- Even though the system is designed for users speaking in North American English, French, and Spanish accents, the system may not always work for some.
- When navigating through an automated system such as voice mail, or when sending a page, at the end of speaking the digit string, make sure to say "Send."
- Storing names in the phonebook when the vehicle is not in motion is recommended.
- It is not recommended to store similar sounding names in the Uconnect Phonebook.
- Phonebook (Downloaded and Uconnect Phone Local) name recognition rate is optimized when the entries are not similar.
- Numbers must be spoken in single digits. "800" must be spoken "eight-zero-zero" not "eight hundred."
- You can say "O" (letter "O") for "0" (zero).
- Even though international dialing for most number combinations is supported, some shortcut dialing number combinations may not be supported.

Far End Audio Performance

Audio quality is maximized under:

- Low-to-medium blower setting
- Low-to-medium vehicle speed
- Low road noise
- Smooth road surface
- Fully closed windows

- Dry weather conditions
- Operation from the driver's seat
- Performance, such as audio clarity, echo, and loudness to a large degree rely on the phone and network, and not the Uconnect Phone
- Echo at the phone far end can sometimes be reduced by lowering the in-vehicle audio volume

Recent Calls

If your phone supports "Automatic Phonebook Download," Uconnect Phone can list your Outgoing, Incoming and Missed Calls.

SMS

Uconnect Phone can read or send new messages on your phone.

Read Messages:

If you receive a new text message while your phone is connected to Uconnect Phone, an announcement will be made to notify you that you have a new text message. If you wish to hear the new message:

1. Push the Phone button.
2. After the "Ready" prompt and the following beep, say "SMS Read" or "Read Messages."
   - Uconnect Phone will play the new text message for you.

After reading a message, you can "Reply" or "Forward" the message using Uconnect Phone.

Send Messages:

You can send messages using Uconnect Phone. To send a new message:

1. Push the Phone button.
2. After the "Ready" prompt and the following beep, say "SMS Send" or "Send Message."
3. You can either say the message you wish to send or say "List Messages." There are 20 preset messages.

To send a message, push the Voice Command button while the system is listing the message and say "Send."

Uconnect Phone will prompt you to say the name or number of the person you wish to send the message to.

List of Preset Messages:

1. Yes
2. No
3. Where are you?
4. I need more direction
5. L O L
6. Why
7. I love you
8. Call me
9. Call me later
10. Thanks
11. See You in 15 minutes
12. I am on my way
13. I'll be late
14. Are you there yet?
15. Where are we meeting?
16. Can this wait?
17. Bye for now
18. When can we meet?
19. Send number to call
20. Start without me

Turn SMS Incoming Announcement ON/OFF

Turning the SMS Incoming Announcement OFF will stop the system from announcing the new incoming messages.

1. Push the Phone button.
2. After the "Ready" prompt and the following beep, say "Setup, SMS Incoming Message Announcement," you will then be given a choice to change it.

Bluetooth Communication Link

Mobile phones have been found to lose connection to the Uconnect Phone. When this happens, the connection can generally be reestablished by switching the phone off/on. Your mobile phone is recommended to remain in Bluetooth ON mode.

Power-Up

After switching the ignition key from OFF to either the ON or ACC position, or after a language change, you must wait at least 15 seconds prior to using the system.

Voice Tree

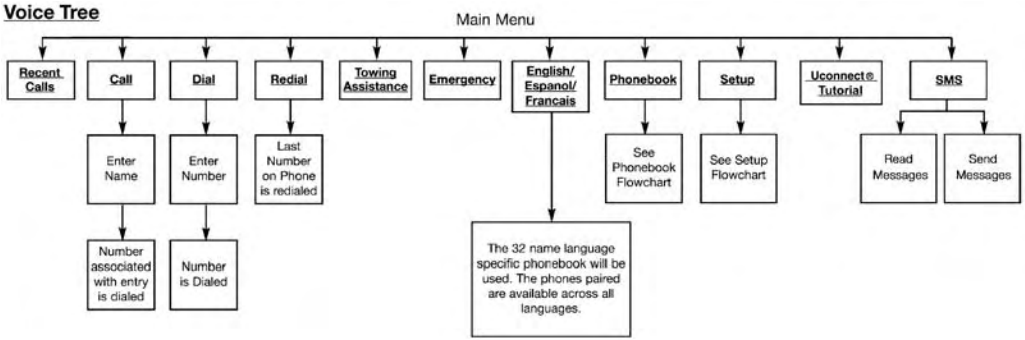

Note: Available Voice commands are shown in bold face and are underlined.

030772523

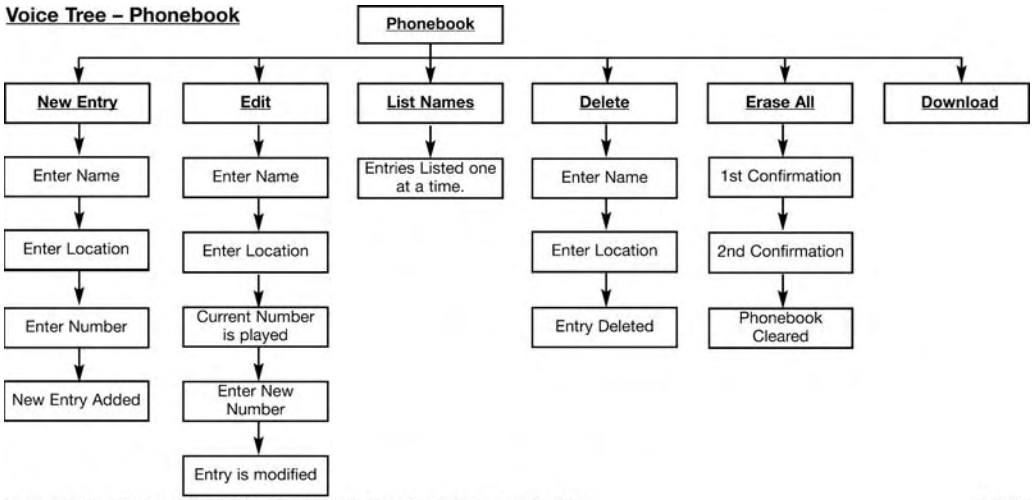

Note: Available Voice commands are shown in bold face and are underlined.

81c6bf80

Voice Tree – Setup

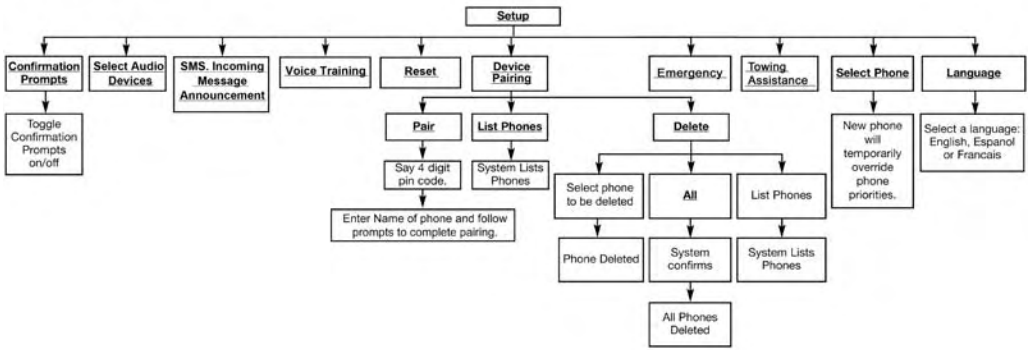

Note: Available Voice commands are shown in bold face and are underlined. 030605540

Voice Commands

Primary	Alternate (s)
zero	
one	
two	
three	

Primary	Alternate (s)
four	
five	
six	
seven	
eight	

Primary	Alternate (s)
nine	
star (*)	
plus (+)	
pound (#)	
add location	
all	
call	
cancel	
confirmation prompts	
continue	
delete	
dial	
download	
edit	
emergency	
English	
erase all	
Espanol	
Francais	
help	

Primary	Alternate (s)
home	
language	
list names	
list phones	
mobile	
mute	
mute off	
new entry	
no	
other	
pair a phone	
phone pairing	pairing
phonebook	phone book
previous	
record again	
redial	
return to main menu	return or main menu
select phone	select
send	

Primary	Alternate (s)
set up	phone settings or phone set up
towing assistance	
transfer call	
Uconnect Tutorial	
voice training	
work	
yes	

General Information

The following regulatory statement applies to all Radio Frequency (RF) devices equipped in this vehicle:

This device complies with Part 15 of the FCC Rules and with Industry Canada license-exempt RSS standard(s). Operation is subject to the following two conditions:

1. This device may not cause harmful interference, and
2. This device must accept any interference received, including interference that may cause undesired operation.

NOTE: Changes or modifications not expressly approved by the party responsible for compliance could void the user's authority to operate the equipment.

RADIO OPERATION AND MOBILE PHONES

Under certain conditions, the mobile phone being on in your vehicle can cause erratic or noisy performance from your radio. This condition may be lessened or eliminated by relocating the mobile phone antenna. This condition is not harmful to the radio. If your radio performance does not satisfactorily "clear" by the repositioning of the antenna, it is recommended that the radio volume be turned down or off during mobile phone operation when not using Uconnect (if equipped).

Regulatory And Safety Information

USA/CANADA

Exposure to Radio Frequency Radiation

The radiated output power of the internal wireless radio is far below the FCC and IC radio frequency exposure limits. Nevertheless, the wireless radio will be used in such a manner that the radio is 20 cm or further from the human body.

The internal wireless radio operates within guidelines found in radio frequency safety standards and recommendations, which reflect the consensus of the scientific community.

The radio manufacturer believes the internal wireless radio is safe for use by consumers. The level of energy emitted is far less than the electromagnetic energy emitted by wireless devices such as mobile phones. However, the use of wireless radios may be restricted in some situations or environments, such as aboard airplanes. If you are unsure of restrictions, you are encouraged to ask for authorization before turning on the wireless radio.

The following regulatory statement applies to all Radio Frequency (RF) devices equipped in this vehicle:

This device complies with Part 15 of the FCC Rules and with Industry Canada license-exempt RSS standard(s). Operation is subject to the following two conditions:

1. This device may not cause harmful interference, and
2. This device must accept any interference received, including interference that may cause undesired operation.

NOTE: Changes or modifications not expressly approved by the party responsible for compliance could void the user's authority to operate the equipment.

NOTE:

- This equipment has been tested and found to comply with the limits for a Class B digital device, pursuant to Part 15 of the FCC Rules. These limits are designed to provide reasonable protection against harmful interference in a residential installation. This equipment generates, uses and can radiate radio frequency energy and, if not installed and used in accordance with the instructions, may cause harmful interference to radio communications. However, there is no guarantee that interference will not occur in a particular installation.
- If this equipment does cause harmful interference to radio or television reception, which can be determined by turning the equipment off and on, the user is encouraged to try to correct the interference by one or more of the following measures:
  1. Increase the separation between the equipment and receiver.
  2. Consult an authorized dealer or an experienced radio technician for help.

VOICE COMMAND — IF EQUIPPED

Voice Command System Operation

The Uconnect Voice Command system allows you to control your AM, FM radio, disk player, USB mass storage class device, iPod family of devices, Bluetooth Streaming Audio Device, satellite radio, and a memo recorder.

NOTE: Take care to speak into the Voice Interface System as calmly and normally as possible. The ability of the Voice Interface System to recognize user voice commands may be negatively affected by rapid speaking or a raised voice level.

WARNING!

Any voice commanded system should be used only in safe driving conditions following all applicable laws. Your attention should be focused on safely operating the vehicle. Failure to do so may result in a collision causing serious injury or death.

When you push the Voice Command button, you will hear a beep. The beep is your signal to give a command.

NOTE: If you do not say a command within a few seconds, the system will present you with a list of options.

If you would like to interrupt the system while it lists options, push the Voice Command button, listen for the beep, and say your command.

Pushing the Voice Command button while the system is speaking is known as “barging in.” The system will be interrupted, and after the beep, you can add or change commands. This will become helpful once you start to learn the options.

NOTE: At any time, you can say the words “Cancel,” “Help” or “Main Menu.”

These commands are universal and can be used from any menu. All other commands can be used depending upon the active application.

When using this system, you should speak clearly and at a normal speaking volume.

The system will best recognize your speech if the windows are closed, and the heater/air conditioning blower is set to low.

At any point, if the system does not recognize one of your commands, you will be prompted to repeat it.

To hear the first available Menu, push the Voice Command button and say "Help" or "Main Menu."

Commands

The Voice Command system understands two types of commands, Universal commands and Local commands. Universal commands are available at all times. Local commands are available if the supported radio mode is active.

Changing The Volume

1. Start a dialogue by pushing the Voice Command button.
2. Say a command (e.g., "Help").
3. Use the ON/OFF VOLUME rotary knob to adjust the volume to a comfortable level while the Voice Command system is speaking. Please note the volume setting for Voice Command is different than the audio system.

Main Menu

Start a dialogue by pushing the Voice Command button. You may say "Main Menu" to switch to the main menu.

In this mode, you can say the following commands:

- "Radio AM" (to switch to the radio AM mode)
- "Radio FM" (to switch to radio FM mode)
- "Sat" (to switch to Satellite radio mode)
- "Disc" (to switch to the disc mode)
- "USB" (to switch to USB mode)
- "Bluetooth Streaming" (to switch to Bluetooth Streaming mode)
- "Memo" (to switch to the memo recorder)
- "System Setup" (to switch to system setup)

Radio AM

To switch to the AM band, say "AM" or "Radio AM." In this mode, you may say the following commands:

- "Frequency #" (to change the frequency)
- "Next Station" (to select the next station)
- "Previous Station" (to select the previous station)
- "Radio Menu" (to switch to the radio menu)
- "Main Menu" (to switch to the main menu)

Radio FM

To switch to the FM band, say "FM" or "Radio FM." In this mode, you may say the following commands:

- "Frequency #" (to change the frequency)
- "Next Station" (to select the next station)
- "Previous Station" (to select the previous station)
- "Menu Radio" (to switch to the radio menu)
- "Main Menu" (to switch to the main menu)

Satellite Radio

To switch to satellite radio mode, say "Sat" or "Satellite Radio." In this mode, you may say the following commands:

- "Channel Number" (to change the channel by its spoken number)
- "Next Channel" (to select the next channel)
- "Previous Channel" (to select the previous channel)
- "List Channel" (to hear a list of available channels)
- "Select Name" (to say the name of a channel)
- "Menu Radio" (to switch to the radio menu)
- "Main Menu" (to switch to the main menu)

Disc Mode

To switch to the disc mode, say "Disc." In this mode, you may say the following commands:

- "Track" (#) (to change the track)
- "Next Track" (to play the next track)
- "Previous Track" (to play the previous track)
- "Main Menu" (to switch to the main menu)

USB Mode

To switch to USB mode, say "USB." In this mode, you may say the following commands:

- "Next Track" (to play the next track)
- "Previous Track" (to play the previous track)
- "Play" (to play an Artist Name, Playlist Name, Album Name, Track Name, etc.)

Bluetooth Streaming (BT) Mode

To switch to Bluetooth Streaming (BT) mode, say "Bluetooth Streaming." In this mode, you may say the following commands:

- "Play" (to play the current track)

- "Pause" (to pause the current track)
- "Next Track" (to play the next track)
- "Previous Track" (to play the previous track)

Memo Mode

To switch to the voice recorder mode, say "Memo." In this mode, you may say the following commands:

- "New Memo" (to record a new memo) — During the recording, you may push the Voice Command button to stop recording. You proceed by saying one of the following commands:
  - "Save" (to save the memo)
  - "Continue" (to continue recording)
  - "Delete" (to delete the recording)
- "Play Memos" (to play previously recorded memos) — During the playback you may push the Voice Command button to stop playing memos. You proceed by saying one of the following commands:
  - "Repeat" (to repeat a memo)
  - "Next" (to play the next memo)
  - "Previous" (to play the previous memo)
  - "Delete" (to delete a memo)
  - "Delete All" (to delete all memos)

Setup

To switch to system setup, you may say one of the following:

- "Change to setup"
- "Switch to system setup"
- "Main menu setup"
- "Switch to setup"

In this mode, you may say the following commands:

- "Language English"
- "Language French"
- "Language Spanish"
- "Tutorial"
- "Voice Training"

NOTE: Keep in mind that you have to push the Voice Command button first and wait for the beep before speaking the "Barge In" commands.

Voice Training

For users experiencing difficulty with the system recognizing their voice commands or numbers the Uconnect Voice "Voice Training" feature may be used.

1. Push the Voice Command button, say "System Setup" and once you are in that menu then say "Voice Training." This will train your own voice to the system and will improve recognition.
2. Repeat the words and phrases when prompted by Uconnect Voice. For best results, the "Voice Training" session should be completed when the vehicle is parked, engine running, all windows closed, and the blower fan switched off. This procedure may be repeated with a new user. The system will adapt to the last trained voice only.

CD/DVD DISC MAINTENANCE

To keep a CD/DVD in good condition, take the following precautions:

1. Handle the disc by its edge; avoid touching the surface.
2. If the disc is stained, clean the surface with a soft cloth, wiping from center to edge.
3. Do not apply paper or tape to the disc; avoid scratching the disc.
4. Do not use solvents such as benzene, thinner, cleaners, or anti-static sprays.
5. Store the disc in its case after playing.
6. Do not expose the disc to direct sunlight.
7. Do not store the disc where temperatures may become too high.

NOTE: If you experience difficulty in playing a particular disc, it may be damaged, (e.g., scratched, reflective coating removed, a hair, moisture or dew on the disc) oversized, or have protection encoding. Try a known good disc before considering disc player service.

CUSTOMER ASSISTANCE

CONTENTS

- SUGGESTIONS FOR OBTAINING SERVICE FOR YOUR VEHICLE 492
  - Prepare For The Appointment 492
  - Prepare A List 492
  - Be Reasonable With Requests 492
- IF YOU NEED ASSISTANCE 492
  - FCA US LLC Customer Center 493
  - FCA Canada Inc. Customer Center. 493
  - In Mexico Contact 493
  - Puerto Rico And U.S. Virgin Islands. 493
  - Customer Assistance For The Hearing Or Speech Impaired (TDD/TTY) 493
  - Service Contract 494
- WARRANTY INFORMATION 495
- MOPAR PARTS 495
- REPORTING SAFETY DEFECTS 495
  - In The 50 United States And Washington, D.C. . .495
  - In Canada 495
- PUBLICATION ORDER FORMS 496

SUGGESTIONS FOR OBTAINING SERVICE FOR YOUR VEHICLE

Prepare For The Appointment

If you are having warranty work done, be sure to have the right papers with you. Take your warranty folder. All work to be performed may not be covered by the warranty. Discuss additional charges with the service manager. Keep a maintenance log of your vehicle's service history. This can often provide a clue to the current problem.

Prepare A List

Make a written list of your vehicle's problems or the specific work you want done. If you've had an accident or work done that is not on your maintenance log, let the service advisor know.

Be Reasonable With Requests

If you list a number of items and you must have your vehicle by the end of the day, discuss the situation with the service advisor and list the items in order of priority. At many authorized dealers, you may obtain a rental vehicle at a minimal daily charge. If you need a rental, it is advisable to make these arrangements when you call for an appointment.

IF YOU NEED ASSISTANCE

The manufacturer and its authorized dealer are vitally interested in your satisfaction. We want you to be happy with our products and services.

Warranty service must be done by an authorized dealer. We strongly recommend that you take the vehicle to an authorized dealer. They know your vehicle the best, and are most concerned that you get prompt and high quality service. The manufacturer's authorized dealer have the facilities, factory-trained technicians, special tools, and the latest information to ensure the vehicle is fixed correctly and in a timely manner.

This is why you should always talk to an authorized dealer service manager first. Most matters can be resolved with this process.

- If for some reason you are still not satisfied, talk to the general manager or owner of the authorized dealer. They want to know if you need assistance.
- If an authorized dealer is unable to resolve the concern, you may contact the manufacturer's customer center.

Any communication to the manufacturer's customer center should include the following information:

- Owner's name and address
- Owner's telephone number (home and office)
- Authorized dealer name
- Vehicle Identification Number (VIN)
- Vehicle delivery date and mileage

FCA US LLC Customer Center

P.O. Box 21–8004

Auburn Hills, MI 48321–8004

Phone: (877) 426-5337

FCA Canada Inc. Customer Center

P.O. Box 1621

Windsor, Ontario N9A 4H6

Phone: (800) 465-2001 English / (800) 387-9983 French

In Mexico Contact

Av. Prolongacion Paseo de la Reforma, 1240

Sante Fe C.P. 05109

Mexico, D. F.

In Mexico City: 5081-7568

Outside Mexico City: 1-800-505-1300

Puerto Rico And U.S. Virgin Islands

Customer Service Chrysler International Services LLC

P.O. Box 191857

San Juan 00919-1857

Tel.: (888) 242-6342

Fax: (787) 782-3345

Customer Assistance For The Hearing Or Speech Impaired (TDD/TTY)

To assist customers who have hearing difficulties, the manufacturer has installed special TDD (Telecommunication Devices for the Deaf) equipment at its customer center. Any hearing or speech impaired customer, who has access

to a TDD or a conventional teletypewriter (TTY) in the United States, can communicate with the manufacturer by dialing 1-800-380-CHRY.

Canadian residents with hearing difficulties that require assistance can use the special needs relay service offered by Bell Canada. For TTY teletypewriter users, dial 711 and for Voice callers, dial 1-800-855-0511 to connect with a Bell Relay Service operator.

Service Contract

You may have purchased a service contract for a vehicle to help protect you from the high cost of unexpected repairs after the manufacturer's New Vehicle Limited Warranty expires. The manufacturer stands behind only the manufacturer's service contracts. If you purchased a manufacturer's service contract, you will receive Plan Provisions and an Owner Identification Card in the mail within three weeks of the vehicle delivery date. If you have any questions about the service contract, call the manufacturer's Service Contract National Customer Hotline at 1-800-521-9922 (Canadian residents, call (800) 465-2001 English / (800) 387-9983 French).

The manufacturer will not stand behind any service contract that is not the manufacturer's service contract. It is not responsible for any service contract other than the manufacturer's service contract. If you purchased a service contract that is not a manufacturer's service contract, and you require service after the manufacturer's New Vehicle Limited Warranty expires, please refer to the contract documents, and contact the person listed in those documents.

We appreciate that you have made a major investment when you purchased the vehicle. An authorized dealer has also made a major investment in facilities, tools, and training to assure that you are absolutely delighted with the ownership experience. You will be pleased with their sincere efforts to resolve any warranty issues or related concerns.

WARNING!

Engine exhaust (internal combustion engines only), some of its constituents, and certain vehicle components contain, or emit, chemicals known to the State of California to cause cancer and birth defects, or other reproductive harm. In addition, certain fluids contained in vehicles and certain products of component wear contain, or emit, chemicals known to the State of

(Continued)

WARNING! ***(Continued)***

California to cause cancer and birth defects, or other reproductive harm.

WARRANTY INFORMATION

See the Warranty Information Booklet for the terms and provisions of FCA US LLC warranties applicable to this vehicle and market.

MOPAR PARTS

Mopar fluids, lubricants, parts, and accessories are available from an authorized dealer. They are recommended for your vehicle in order to help keep the vehicle operating at its best.

REPORTING SAFETY DEFECTS

In The 50 United States And Washington, D.C.

If you believe that your vehicle has a defect that could cause a crash or cause injury or death, you should immediately inform the National Highway Traffic Safety Administration (NHTSA) in addition to notifying FCA US LLC.

If NHTSA receives similar complaints, it may open an investigation, and if it finds that a safety defect exists in a group of vehicles, it may order a recall and remedy campaign. However, NHTSA cannot become involved in individual problems between you, your authorized dealer or FCA US LLC.

To contact NHTSA, you may call the Vehicle Safety Hotline toll free at 1-888-327-4236 (TTY: 1-800-424-9153); or go to http://www.safercar.gov; or write to: Administrator, NHTSA, 1200 New Jersey Avenue, SE., West Building, Washington, D.C. 20590. You can also obtain other information about motor vehicle safety from http://www.safercar.gov.

In Canada

If you believe that your vehicle has a safety defect, you should contact the Customer Service Department immediately. Canadian customers who wish to report a safety defect to the Canadian government should contact Transport Canada, Motor Vehicle Defect Investigations and Recalls at 1-800-333-0510 or go to http://www.tc.gc.ca/roadsafety/.

PUBLICATION ORDER FORMS

To order the following manuals, you may use either the website or the phone numbers listed below. Visa, Mastercard, American Express, and Discover orders are accepted.

Service Manuals

These comprehensive Service Manuals provide the information that students and professional technicians need in diagnosing/troubleshooting, problem solving, maintaining, servicing, and repairing FCA US LLC vehicles. A complete working knowledge of the vehicle, system, and/or components is written in straightforward language with illustrations, diagrams, and charts.

Diagnostic Procedure Manuals

Diagnostic Procedure Manuals are filled with diagrams, charts and detailed illustrations. These practical manuals make it easy for students and technicians to find and fix problems on computer-controlled vehicle systems and features. They show exactly how to find and correct problems the first time, using step-by-step troubleshooting and drivability procedures, proven diagnostic tests and a complete list of all tools and equipment.

Owner's Manuals

These Owner's Manuals have been prepared with the assistance of service and engineering specialists to acquaint you with specific FCA US LLC vehicles. Included are starting, operating, emergency and maintenance procedures as well as specifications, capabilities and safety tips.

Call toll free at:

- **1-800-890-4038 (U.S.)**
- **1-800-387-1143 (Canada)**

Or

Visit us on the Worldwide Web at:

- www.techauthority.com

INDEX

About Your Brakes 426
Adding Engine Coolant (Antifreeze) 387
Adding Fuel 303
Additives, Fuel 429
Air Bag 240
Advance Front Air Bag 240
Air Bag Operation 242
Air Bag Warning Light 239
Enhanced Accident Response 246, 358
Event Data Recorder (EDR) 358
Front Air Bag 240
If A Deployment Occurs 245
Knee Impact Bolsters 242
Maintaining Your Air Bag System 247
Transporting Pets 267
Air Bag Light. 191, 239, 269
Air Bag Maintenance 247
Air Cleaner, Engine (Engine Air Cleaner Filter). 371
Air Conditioner Maintenance 375
Air Conditioning Filter 69, 377
Air Conditioning, Operating Tips 69
Air Conditioning Refrigerant 375, 376
Air Conditioning System. 68, 375
Air Filter 371
Air Pressure, Tires 406
Alarm (Security Alarm). 27, 194
Alterations/Modifications, Vehicle 8
Antenna, Satellite Radio 455
Antifreeze (Engine Coolant) 387, 432
Disposal 389
Anti-Lock Brake System (ABS) 204
Anti-Lock Warning Light 194
Arming System (Security Alarm) 28
Assistance Towing 472
Assist, Hill Start 206
Automatic Dimming Mirror 50
Automatic Headlights 53
Automatic Oil Change Indicator 184
Automatic Temperature Control (ATC) 68
Automatic Transmission 285, 395
Adding Fluid 395
Fluid And Filter Changes 395
Fluid Change 395
Fluid Level Check 392, 393
Fluid Type 392, 434
Special Additives 393
Autostick 290
Auxiliary Electrical Outlet (Power Outlet) 172
Auxiliary Power Outlet 172
Axle Fluid 434

Axle Lock 296

Battery 193, 368
Charging System Light 193
Keyless Key Fob Replacement 20
Belts, Seat 269
Body Mechanism Lubrication 379
B-Pillar Location 400
Brake Assist System 206
Brake Control System, Electronic 205
Brake Fluid 390, 434
Brake System 390, 426
Anti-Lock (ABS) 426
Fluid Check 390
Master Cylinder 390
Parking 278
Warning Light 191
Brake/Transmission Interlock 285
Bulb Replacement 334, 335
Bulbs, Light 271, 334

Calibration, Compass 185
Capacities, Fluid 432
Caps, Filler
Fuel 303
Oil (Engine) 367
Power Steering 299
Radiator (Coolant Pressure) 388
Carbon Monoxide Warning 268, 431
Cargo Light 56
Car Washes 420
Cellular Phone 461, 484
Center High Mounted Stop Light 337
Certification Label 305
Chains, Tire 415
Changing A Flat Tire 344, 395
Chart, Tire Sizing 397
Check Engine Light (Malfunction Indicator Light) 201
Checking Your Vehicle For Safety 268
Checks, Safety 268
Child Restraint 248
Child Restraints
Booster Seats 252
Child Restraints 248
Child Seat Installation 264
How To Stow An Unused ALR Seat Belt 261
Infants And Child Restraints 250
LATCH Positions 255
Locating The LATCH Anchorages 258
Lower Anchors And Tethers For Children 254

Older Children And Child Restraints 251
Seating Positions 253
Child Safety Locks 31
Clean Air Gasoline 428
Cleaning
Wheels 414
Climate Control 60
Manual 60
Clock. 439, 446
Cold Weather Operation. 276
Compact Disc (CD) Maintenance. 490
Compact Spare Tire 413
Compass. 184
Compass Calibration 185
Compass Variance 186
Connector
UCI 460
Universal Consumer Interface (UCI) 460
Console 170
Console, Floor. 170
Contract, Service 494
Coolant Pressure Cap (Radiator Cap). 388
Cooling System 385
Adding Coolant (Antifreeze) 387
Coolant Capacity 432
Coolant Level 389
Disposal Of Used Coolant 389
Drain, Flush, And Refill 386
Inspection 386, 389
Points To Remember 389
Pressure Cap 388
Radiator Cap 388
Selection Of Coolant (Antifreeze) 387, 432, 433
Corrosion Protection 419
Customer Assistance 492

Daytime Running Lights 52
Dealer Service 369
Defroster, Windshield. 269
Delay (Intermittent) Wipers 58
Diagnostic System, Onboard. 199
Dimmer Switch, Headlight. 53
Dipsticks
Oil (Engine) 368
Power Steering 299
Disabled Vehicle Towing 355
Disarming, Security System 28
Disposal
Antifreeze (Engine Coolant) 389
Door Locks. 29

Child-Protection Door Lock — Rear Doors 31
Doors. 28
Driver's Seat Back Tilt 37, 38
Driving. 321
Dual Top. 72, 75

Electrical Outlet, Auxiliary (Power Outlet) 172
Electrical Power Outlets 172
Electric Remote Mirrors 51
Electronic Brake Control System 205
Anti-Lock Brake System 204
Electronic Roll Mitigation 214
Traction Control System 208
Electronic Speed Control (Cruise Control) 299
Electronic Stability Control (ESC) 208
Electronic Throttle Control Warning Light 193
Emergency Brake. 278
Emergency, In Case Of
Jacking 344, 395
Jump Starting 349
Tow Hooks 358
Emission Control System Maintenance. 201
Engine 367
Air Cleaner 371
Block Heater 277
Break-In Recommendations 278
Compartment 367
Compartment Identification 367
Coolant (Antifreeze) 433
Cooling 385
Exhaust Gas Caution 268, 431
Fails To Start 276
Flooded, Starting 276
Fuel Requirements 432
Jump Starting 349
Oil 370, 432, 433
Oil Change Interval 184
Oil Filler Cap 367
Oil Filter 371
Oil Selection 370, 432
Oil Synthetic 371
Overheating 352
Starting 275
Engine Oil Viscosity. 370
Engine Oil Viscosity Chart 370
Enhanced Accident Response Feature 246, 358
Ethanol. 429
Exhaust Gas Caution. 268, 431
Exhaust System 268, 384

Exterior Lights 52, 271

Fabric Care 421
Fabric Top 421
Filters
  Air Cleaner 371
  Air Conditioning 69, 377
  Engine Oil 371, 433
  Engine Oil Disposal 371
Flashers
  Hazard Warning 334
  Turn Signal 198, 271, 336, 337
Flash-To-Pass 53
Flooded Engine Starting 276
Fluid, Brake 434
Fluid Capacities. 432
Fluid Leaks. 271
Fluid Level Checks 391
  Brake 390
  Engine Oil 368
  Manual Transmission 395
  Power Steering 299
Fluids And Lubricants 433
Fog Lights 53, 336
Fog Light Service. 336
Fold And Tumble Rear Seat 44
Folding Rear Seat. 37, 40
Folding Windshield 163
Four-Way Hazard Flasher. 334
Four Wheel Drive 292
  Operation 292
  Shifting 292
  Systems 292
Four Wheel Drive Operation 292
Freeing A Stuck Vehicle 354
Front Axle (Differential) 391
Fuel 428
  Adding 303
  Additives 429
  Clean Air 428
  Ethanol 429
  Filler Cap (Gas Cap) 303
  Gasoline 428
  Materials Added 429
  Methanol 429
  Octane Rating 428, 433
  Requirements 432
  Specifications 433
  Tank Capacity 432
Fueling. 303

Fuses 338

Gas Cap (Fuel Filler Cap) 200, 303, 304
Gasoline, Clean Air 428
Gasoline (Fuel) 428
Gasoline, Reformulated 428
Gear Ranges 281, 286
Gear Select Lever Override 353
General Information 484
Glass Cleaning 424
Gross Axle Weight Rating 307
Gross Vehicle Weight Rating 307
GVWR 305

Hands-Free Phone (Uconnect) 461
Hard Top 81
Hard Top, Modular 81
Hard Top Removal 88
Hazard Warning Flasher 334
Headlights
  Automatic 53
  Bulb Replacement 335
  Cleaning 419
  High Beam/Low Beam Select Switch 53
  Passing 53
  Replacing 335
  Switch 52
Head Restraints 46
Heated Mirrors 51
Heated Seats 39
Heater, Engine Block 277
High Beam/Low Beam Select (Dimmer) Switch 53
Hill Descent Control 215
Hill Descent Control Indicator 215
Hill Start Assist 206
Hitches
  Trailer Towing 309
Hood Prop 168
Hood Release 168

Immobilizer (Sentry Key) 25
Information Center, Vehicle 181
Inside Rearview Mirror 49
Instrument Cluster 178, 198
Instrument Cluster Display
  Information Display 184
Instrument Panel Lens Cleaning 423
Integrated Power Module (Fuses) 339
Interior And Instrument Lights 55
Interior Appearance Care 422

Interior Lights. 55
Intermittent Wipers (Delay Wipers). 58
Introduction. 4
Inverter, Power 175
iPod/USB/MP3 Control
Bluetooth Streaming Audio 488

Jacking Instructions 346
Jack Location 344
Jack Operation. 344, 346, 347, 395
Jump Starting 349

Key Fob Battery Service (Remote Keyless Entry) 20
Key, Programming 26
Key, Replacement 25
Keys 19
Key, Sentry (Immobilizer). 25

Lane Change Assist. 54
Lap/Shoulder Belts 228
Latches. 271
Hood 168
Leaks, Fluid 271
Life Of Tires 409
Light Bulbs 271, 334
Lights. 271
Air Bag 191, 239, 269
Automatic Headlights 53
Back-Up 337
Brake Assist Warning 213
Brake Warning 191
Bulb Replacement 334, 335
Cargo 56
Center Mounted Stop 337
Cruise 198
Daytime Running 52
Dimmer Switch, Headlight 53
Exterior 271
Fog 53, 336
Hazard Warning Flasher 334
Headlights 52, 335
Headlight Switch 52
High Beam 53
High Beam/Low Beam Select 53
Hill Descent Control Indicator 215
Instrument Cluster 52
Interior 55
Malfunction Indicator (Check Engine) 195
Passing 53
Rear Servicing 337

Rear Tail Lamps 337
Seat Belt Reminder 194
Security Alarm 194
Service 334, 335
Side Marker 337
Tire Pressure Monitoring (TPMS) 195
Traction Control 213
Turn Signal 54, 198, 271, 336, 337
Warning (Instrument Cluster Description) 198
Loading Vehicle. 305
Tires 400
Locking Axle. 296
Locks
Child Protection 31
Door 29
Power Door 30
Lubrication, Body 379
Lug Nuts 426

Maintenance Free Battery 368
Maintenance Schedule 361
Malfunction Indicator Light (Check Engine) 195, 201
Manual, Service. 496
Manual Transmission 280, 395
Fluid Level Check 395
Lubricant Selection 395, 434
Shift Speeds 281
Memory Feature (Memory Seat) 37
Memory Seat 37
Memory Seats And Radio 37
Methanol 429
Mirrors 49
Automatic Dimming 50
Electric Powered 51
Electric Remote 51
Heated 51
Outside 50
Rearview 49
Vanity 52
Modifications/Alterations, Vehicle 8
Modular Hard Top 81
Monitor, Tire Pressure System. 217
Mopar Parts 495

New Vehicle Break-In Period 278

Occupant Restraints 225, 226
Octane Rating, Gasoline (Fuel) 428, 433
Oil Change Indicator 184
Oil Change Indicator, Reset 184

Oil, Engine 370, 433
Capacity 432
Change Interval 184, 370
Dipstick 368
Disposal 371
Filter 371, 433
Filter Disposal 371
Identification Logo 370
Materials Added To 371
Pressure Warning Light 194
Recommendation 370, 432
Synthetic 371
Viscosity 370, 432
Oil Filter, Change 371
Oil Filter, Selection. 371
Oil Pressure Light 194
Onboard Diagnostic System 199
Operating Precautions 199
Operator Manual (Owner's Manual) 6
Outside Rearview Mirrors 50
Overdrive 290
Overdrive OFF Switch 290
Overheating, Engine 352
Owner's Manual (Operator Manual) 6, 496
Paint Care. 419
Parking Brake 278
Personal Settings 188
Pets 267
Phone, Cellular 461
Phone, Hands-Free (Uconnect) 461
Placard, Tire And Loading Information 400
Power
Brakes 426
Door Locks 30
Inverter 175
Mirrors 51
Steering 298, 299
Windows 70
Power Steering Fluid 434
Pregnant Women And Seat Belts 235
Preparation For Jacking 345
Pretensioners
Seat Belts 236
Programmable Electronic Features. 188

Radial Ply Tires 407
Radiator Cap (Coolant Pressure Cap). 388
Radio 130
Operating Instructions Auxiliary Mode 445

Operating Instructions Radio Mode 439
Radio 130 With Satellite Radio
Multimedia Satellite Radio 454
Operating Instructions Radio Mode 445
Radio Frequency
General Information 21, 24, 27
Radio Operation 484
Rear Axle (Differential) 391
Rear Seat, Folding 37
Rear Swing Gate 169
Rear Wiper/Washer. 59
Recreational Towing. 318
Shifting Into Transfer Case Neutral (N) 319
Shifting Out Of Transfer Case Neutral (N) 320
Reformulated Gasoline. 428
Refrigerant 376
Release, Hood 168
Reminder, Seat Belt 227
Remote Control
Starting System 22
Remote Sound System (Radio) Controls. 459
Remote Starting System 22
Replacement Bulbs 334
Replacement Keys. 25
Replacement Tires 410
Reporting Safety Defects 495
Resetting Oil Change Indicator 184
Restraint, Head. 46
Restraints, Child 248
Roll Over Warning 5
Rotation, Tires. 416

Safety Checks Inside Vehicle. 269
Safety Checks Outside Vehicle 271
Safety Defects, Reporting 495
Safety, Exhaust Gas 268
Safety Information, Tire 395
Safety Tips 268
Satellite Radio Antenna 455
Schedule, Maintenance. 361
Seat Belt
Adjustable Upper Shoulder Belt Anchorage 233
Automatic Locking Retractor (ALR) 236
Energy Management Feature 236
Lap/Shoulder Belt Operation 230
Lap/Shoulder Belts 228
Lap/Shoulder Belt Untwisting 233
Pregnant Women 235
Seat Belt Extender 234
Seat Belt Pretensioner 236

Seat Belt Reminder 227
Seat Belt Maintenance 423
Seat Belt Reminder 227
Seat Belts 227, 269
Adjustable Shoulder Belt 233
Adjustable Upper Shoulder Anchorage 233
Child Restraint 248
Extender 234
Front Seat 227, 228, 230
Inspection 269
Operating Instructions 230
Pregnant Women 235
Pretensioners 236
Rear Seat 228
Reminder 194
Untwisting Procedure 233
Seats 37
Adjustment 37
Easy Entry 37, 41
Fold And Tumble Rear 44
Heated 37, 39
Height Adjustment 38
Memory 37
Rear Folding 37, 40
Removal 46
Seatback Release 37, 38
Tilting 37, 38
Vented 37
Ventilated 37
Security Alarm 27, 194
Security System 27
Selection Of Coolant (Antifreeze) 433
Sentry Key (Immobilizer) 25
Sentry Key Programming 26
Sentry Key Replacement 25
Service Assistance 492
Service Contract 494
Service Manuals 496
Settings, Personal 188
Setting The Clock 439, 446
Shifting 283
Automatic Transmission 283
Manual Transmission 280
Transfer Case, Shifting Into Transfer Case Neutral (N) 319
Transfer Case, Shifting Out Of Transfer Case Neutral (N) 320
Shift Lever Override 353
Shoulder Belts 228
Signals, Turn 54, 198, 271, 336, 337

Snow Chains (Tire Chains) 415
Snow Tires 412
Soft Top. 98, 129
Spare Tire 345, 412, 413
Spark Plugs 433
Specifications
  Fuel (Gasoline) 433
  Oil 433
Speed Control
  Accel/Decel 302
  Cancel 302
  Resume 302
Speed Control (Cruise Control) 299
Starting 22, 275
  Automatic Transmission 275
  Cold Weather 276
  Engine Block Heater 277
  Engine Fails To Start 276
  Manual Transmission 275
  Remote 22
Starting And Operating 275
Starting Procedures 275
Steering 48
  Power 298, 299
  Tilt Column 48
  Wheel, Tilt 48
Steering Wheel Audio Controls 459
Steering Wheel Mounted Sound System Controls 459
Storage, Behind the Seat. 171
Storage, Vehicle 69, 418
Storing Your Vehicle 418
Stuck, Freeing 354
Sunrider. 127, 160
Supplemental Restraint System - Air Bag 240
Sway Bar Disconnect, Electronic 296
Sway Control, Trailer 214
Swing Gate, Rear. 169
Synthetic Engine Oil 371
System, Remote Starting 22

Temperature Control, Automatic (ATC) 68
Tilt Steering Column 48
Tire And Loading Information Placard. 400
Tire Markings 396
Tires. 271, 405, 412, 417
  Aging (Life Of Tires) 409
  Air Pressure 405
  Chains 415
  Changing 344, 395
  Compact Spare 413

General Information 405, 412
High Speed 407
Inflation Pressures 406
Jacking 344, 347, 395
Life Of Tires 409
Load Capacity 400, 402
Pressure Monitor System (TPMS) 217
Pressure Warning Light 195
Quality Grading 417
Radial 407
Replacement 410
Rotation 416
Safety 395, 405
Sizes 397
Snow Tires 412
Spare Tire 345, 412, 413
Spinning 408
Tread Wear Indicators 408
Wheel Nut Torque 426
Tire Safety Information. 395
Tongue Weight/Trailer Weight 314
To Open Hood 168
Tow Hooks, Emergency 358
Towing 306, 310, 355
24-Hour Towing Assistance 472
Disabled Vehicle 355
Recreational 318
Weight 310
Towing Assistance 472
Towing Vehicle Behind A Motorhome 318
Trac-Lok Rear Axle 295
Traction Control 208
Trailer Sway Control (TSC). 214
Trailer Towing. 306
Cooling System Tips 317
Hitches 309
Trailer And Tongue Weight 310, 314
Wiring 315
Trailer Towing Guide. 310
Trailer Weight 310
Transaxle
Autostick 290
Transfer Case 392
Fluid 434
Four-Wheel-Drive Operation 292
Maintenance 392
Transmission
Automatic 285, 392
Fluid 434
Maintenance 392

Manual 280
Shifting 283
Transporting Pets 267
Tread Wear Indicators 408
Turn Signals 54, 198, 336, 337

UCI Connector 460
Uconnect
Advanced Phone Connectivity 474
Phone Call Features 468
Phone Features 471
Uconnect (Hands-Free Phone). 461
Uniform Tire Quality Grades 417
Universal Consumer Interface (UCI) Connector 460
Untwisting Procedure, Seat Belt 233

Vanity Mirrors 52
Variance, Compass. 186
Vehicle Identification Number (VIN) 426
Vehicle Loading 305, 402
Vehicle Modifications/Alterations. 8
Vehicle Storage. 69, 418
Viscosity, Engine Oil 370
Voice Command
Commands 487
System Operation 486
Voice Training 490
Voice Recognition System (VR) 486

Warning Lights (Instrument Cluster Description) 198
Warning, Roll Over 5
Warnings And Cautions 8
Warranty Information 495
Washers, Windshield 368
Washing Vehicle 420
Wheel And Wheel Trim 414
Wheel And Wheel Trim Care 414
Wind Buffeting 71
Window Fogging 69
Windows
Power 70
Windshield Defroster 269
Windshield, Folding. 163
Windshield Washers 57, 368
Fluid 368
Windshield Wiper Blades 379
Windshield Wipers 57
Wiper Blade Replacement. 379
Wiper, Rear 59

INSTALLATION OF RADIO TRANSMITTING EQUIPMENT

Special design considerations are incorporated into this vehicle's electronic system to provide immunity to radio frequency signals. Mobile two-way radios and telephone equipment must be installed properly by trained personnel. The following must be observed during installation.

The positive power connection should be made directly to the battery and fused as close to the battery as possible. The negative power connection should be made to body sheet metal adjacent to the negative battery connection. This connection should not be fused.

Antennas for two-way radios should be mounted on the roof or the rear area of the vehicle. Care should be used in mounting antennas with magnet bases. Magnets may affect the accuracy or operation of the compass on vehicles so equipped.

The antenna cable should be as short as practical and routed away from the vehicle wiring when possible. Use only fully shielded coaxial cable.

Carefully match the antenna and cable to the radio to ensure a low Standing Wave Ratio (SWR).

Mobile radio equipment with output power greater than normal may require special precautions.

All installations should be checked for possible interference between the communications equipment and the vehicle's electronic systems.

Jeep®

18JK-126-AA
©2017 FCA US LLC. All Rights Reserved.
Jeep is a registered trademark of FCA US LLC.

First Edition
Printed in the U.S.A.